ORDINANCE 2023-01

AN ORDINANCE OF THE SOUTH WEBER CITY COUNCIL

WHEREAS, the South Weber City Council last adopted the South Weber City Development, Design, and Construction Standards ("Standards") in February 2019 (Ordinance No. 19-03); and

WHEREAS, when the South Weber City Council adopted the Standards in 2017 and 2019, the language in the ordnance referred to the standards by date even though it established and recognized a means for updating the standards by the City Council periodically; and

WHEREAS, the Standards have and will continue to be updated periodically as new technology, policy changes, procedure changes, updated methods of design and construction are implemented, or infrastructure materials change; and

WHEREAS, in coordination with City Staff, the City Engineer (Jones & Associates Consulting Engineers) prepared and recommends revisions to the Standards; and

WHEREAS, the Planning Commission held a public hearing on December 8, 2022, regarding updates to the Standards and recommends the City Council approve the same; and

WHEREAS, the City Council finds good cause for adopting the Standards as revised, and to modify the ordinance language to allow future revisions to the Standards be adopted by resolution;

NOW, THEREFORE, BE IT ORDAINED by the City Council of South Weber City, State of Utah:

Section 1. Section adopted. Title 9, Chapter 7, Section 1 (9-7-1) of the South Weber City Code is hereby revised and adopted to read:

> **9-7-1: DEVELOPMENT, DESIGN, AND CONSTRUCTION STANDARDS ADOPTED:**
> All persons developing, designing, constructing, reconstructing, building, or rebuilding on property located in South Weber City shall comply with the guidelines contained in the document entitled, "South Weber City Development, Design, and Construction Standards." The South Weber City Development, Design, and Construction Standards, together with appendices, is hereby adopted by the City with the understanding that such standards may be amended, edited, revised, or appended by resolution to meet changes to technology, materials, regulation, policy, procedure, or methods of design or construction. Any amendment to the Development, Design, or Construction Standards that materially increases the cost of development when compared to the existing specification shall be adopted by ordinance of the City Council. Any successive

amendments, editions, revisions, or appendices adopted by the City Council are hereby incorporated herein by reference and shall become effective upon the designated effective date.

Section 2. Document Attached. The "South Weber City Development, Design, and Construction Standards, together with its appendices, is hereby attached as "**Exhibit A**" and made a part hereof.

Section 3. General Repealer. Ordinances in conflict with this ordinance are hereby repealed to the extent of such conflict.

Section 4. Effective Date. The City Council of South Weber City, State of Utah, has determined that the public health, safety, and welfare requires that this ordinance take effect immediately. Therefore, this ordinance shall become effective immediately upon passage and publication as required by law.

PASSED AND ADOPTED by the City Council of South Weber, Davis County, on the 10th day of January, 2023.

MAYOR: Rod Westbroek

ATTEST: City Recorder, Lisa Smith

SOUTH WEBER CITY * 1861 * DAVIS COUNTY UTAH * OFFICIAL SEAL

Roll call vote is as follows:		
Council Member Halverson	FOR	AGAINST
Council Member Petty	FOR	AGAINST
Council Member Soderquist	FOR	AGAINST
Council Member Alberts	FOR	AGAINST
Council Member Dills	FOR	AGAINST

CERTIFICATE OF POSTING

I hereby certify that Ordinance 2023-01 was passed and adopted the 10th day of January, 2023, and that complete copies of the ordinance were posted in the following locations within the City this 11th day of January, 2023.

1. South Weber Family Activity Center, 1181 E. Lester Drive
2. South Weber City Building, 1600 E. South Weber Drive
3. City Website www.southwebercity.com
4. Utah Public Notice Website Utah.gov/pmn

Lisa Smith, City Recorder

Exhibit “A”

South Weber City Development, Design, and Construction Standards

South Weber City Corporation

Development, Design, & Construction Standards

January 2023

Prepared by

JONES & ASSOCIATES

Consulting Engineers

DocuSign Envelope ID: AACAAD7B-F1CB-4C7E-A94A-B6D9646997F7

DEVELOPMENT, DESIGN, AND CONSTRUCTION STANDARDS

for

SOUTH WEBER CITY

SUBMITTED & RECOMMENDED:

Brandon K. Jones, P.E. — 1/11/23 Date
City Engineer

APPROVED:

DocuSigned by: Rod Westbroek 314386B5085247A... — 1/11/23 Date
Rod Westbroek
Mayor

DocuSigned by: David J. Larson 051A8FAC8557468... — 1/11/23 Date
David J. Larson
City Manager

DocuSigned by: D3603EA2F3B74C0... — 1/11/23 Date
Trevor Cahoon
Community & Planning Director

DocuSigned by: Mark B. Larsen F88797E742EC406... — 1/11/23 Date
Mark B. Larsen
Public Works Director

DocuSigned by: Lisa Smith EA6086371DCF4D1... — 1/11/23 Date
Lisa Smith
Attest, City Recorder

TABLE OF CONTENTS

SECTION 1 GENERAL 1
1.01 South Weber City Municipal Code Governs 1
1.02 Conformance with Federal, State, and Local Laws 1
1.03 Definitions 1
1.04 Acronyms 2
1.05 Modification Process 2

SECTION 2 DEVELOPMENT STANDARDS 4
2.01 Approval Procedure 4
2.02 Developer Responsibilities 4
2.03 Subdivision Standards 5
2.04 Geotechnical Investigation 5

SECTION 3 DESIGN STANDARDS 6
3.01 Required Improvements 6
3.02 Improvement Plans 6
3.03 Sanitary Sewer Design 7
3.04 Water Design 7
3.05 Street/Road Design 7
3.06 Storm Drain and Drainage Design 9

SECTION 4 CONSTRUCTION STANDARDS 10
4.01 General Policies 10
4.02 Pre-Construction Conference 13
4.03 Construction 13

SECTION 5 TECHNICAL SPECIFICATIONS 16
5.01 Technical Specifications for South Weber City 16
5.02 Order of Precedence 16

SECTION 6 STANDARD DRAWINGS, PLANS, AND DETAILS 17
6.01 Standard Drawings, Plans, and Details for South Weber City 17
6.02 Order of Precedence 17

APPENDICES

A STORM DRAIN AND DRAINAGE DESIGN STANDARDS
B GEOTECHNICAL INVESTIGATION REPORT MINIMUM REQUIREMENTS
C MODIFICATIONS AND ADDITIONS TO MANUAL OF STANDARD SPECIFICATIONS
D SOUTH WEBER CITY PUBLIC WORKS STANDARD DRAWINGS

SECTION 1 GENERAL

1.01 South Weber City Municipal Code Governs

Nothing in this document shall be construed to be contrary to South Weber City Municipal Code. Should a conflict exist between this document and the Ordinances, the Code shall govern.

1.02 Conformance with Federal, State, and Local Laws

Nothing in this document shall relieve the Developer, Engineer, or Contractor from abiding by any and all Federal, State, and local laws.

1.03 Definitions

A. Title or Chapter – When "Title" or "Chapter" is written, it shall be as if "South Weber City Ordinance, Title (or Chapter)" is written.

B. Contractor – The individual, firm, co-partnership, or corporation, and his, their, or its heirs, executors, administrators, successors, and assigns, or the lawful agent of any such individual firm, partnership, covenanter, or corporation, or his, their, or its surety under the contract bond, constituting one of the principals to the contract and undertaking to perform the Work.

C. Drawings – The City-approved construction drawings, the South Weber City Public Works Standard Drawings, and/or the Manual of Standard Drawings, as applicable.

D. Developer – The person sponsoring construction of the improvements.

E. Development – The subject subdivision, minor subdivision, or building.

F. Improvements – See "Work."

G. Improvement Plans – See "Drawings."

H. Inspector – The authorized representative of the City or City Engineer assigned to make all necessary inspections of the Work performed or being performed, or of materials furnished or being furnished by the Contractor.

I. Work – All types of work necessary to provide safe access and utility service to and within proposed subdivision or site, including, but not limited to, site grading, utility installation, and street construction. Work includes all labor, services, and documentation necessary to produce such construction; furnishing, installing, and incorporating all materials and equipment into such construction; and may include related services such as testing, start-up, and commissioning.[1]

J. See also the South Weber City Municipal Code, Title 11 Subdivision Regulations. Where definition conflicts arise between City Ordinance and this document, the definitions in this document shall take precedence when in reference to this document.

[1] From EJCDC© C-700, Standard General Conditions of the Construction Contract.

1.04 Acronyms

A. BMP – Best Management Practice

B. CFP – Capital Facilities Plan

C. DDW – Division of Drinking Water

D. DWQ – Division of Water Quality

E. DWRi – Division of Water Rights

F. FEMA – Federal Emergency Management Agency

G. HOA – Homeowners' Association

H. LID – Low Impact Development

I. RCP – Reinforced Concrete Pipe

J. SWC – South Weber City

K. UAC – Utah Administrative Code

L. UDEQ – Utah Department of Environmental Quality

M. UDOT – Utah Department of Transportation

N. UPDES – Utah Pollutant Discharge Elimination System

O. USACE – United States Army Corps of Engineers

1.05 Modification Process

A. Whenever, in the opinion of the City Public Works Department, the City Engineer, or the Superintendent having jurisdiction, a literal enforcement of these regulations may work an undue hardship or a literal enforcement of the provisions may be unnecessary to meet the goals and standards of the City, the City may modify those standards in the following manner:

B. Modifications may be granted when there are practical difficulties involving carrying out the provisions of the Public Works Standards and Technical Specifications, and a panel consisting of the City Manager, City Planner, City Engineer, and the Public Works Director or their Representative determine that granting of a modification for an individual case will meet the goals and requirements of the City without unduly jeopardizing the public and the individual's interest.

   1. The City shall first receive a written request for a modification to the standards from any interested party.

   2. Upon receipt of the request, the panel discussed above shall find that a special individual reason makes the strict letter of the standard impractical, and shall find the modification is in conformance with the intent and purpose of the standards and shall find that such modification does not in any way lessen the integrity of the standards.

3. When such findings of fact are made, the panel may grant such modification as it deems appropriate. The details of any action granted as modification by this panel shall be recorded and entered in the files of the City, with the specific reasons for the granting of said modification.

SECTION 2 DEVELOPMENT STANDARDS

2.01 Approval Procedure

See Title 11 – Subdivision Regulations of the South Weber City Municipal Code

2.02 Developer Responsibilities

A. Required Improvements and Guarantees – see Title 11 of South Weber City Municipal Code.

B. Permits and Approvals

1. Developer is responsible for obtaining all necessary permits and approvals for the construction of the Improvements. Copies of all applications and approved permits shall be submitted to the City. Agencies/permits that may be required include, but are not limited to:

   a. DDW Plan Approval (pre-construction)

   b. DDW Operating Permit (post-construction)

   c. UPDES NOI and NOT

   d. DWRi Stream Alteration

   e. DWRi Dam Safety

   f. EPA 404 Wetlands

   g. FEMA CLOMA and/or CLOMR

   h. UDOT

   i. Others as applicable

C. Improvements

1. The required improvements shall include all street improvements in front of all lots along all dedicated streets to a connection with existing improvements of the same kind or to the boundary or the subdivision nearest existing improvements. Design must provide for future extension to adjacent development and to be compatible with the contour of the ground for proper drainage. All water lines, sewer lines, and any other buried conduit shall be installed to the boundary lines of the subdivision. See Chapter 11.04 for more information.

2. Upsizing based on CFPs – The Developer will be required to construct/install infrastructure sized in accordance with the City's currently adopted CFPs. The City will be responsible for paying the difference in cost between the master planned infrastructure size and the minimum infrastructure size required for the development.

3. Seal Coat – See Municipal Code.

4. Street Lighting – See Municipal Code.

5. Street Signage – See Municipal Code.
6. Materials and Construction Testing – Developer shall be responsible for all materials and construction testing. Testing must be performed by a properly licensed and qualified testing agency. The results shall be provided to the City's inspector.
7. Survey of Existing Improvements – Developer shall reimburse City for City Engineer's time spent surveying in locations of new improvements.

2.03 Subdivision Standards

A. The general standards for subdivision layout and development are found in Title 11 – Subdivision Regulations.

B. See also Section 3 – Design Standards and Section 4 – Construction Standards of this document.

2.04 Geotechnical Investigation

A. A geotechnical investigation should be conducted for the following:

1. All new subdivisions;
2. All commercial subdivisions and sites;
3. Any subdivision that includes public infrastructure improvements;
4. Any development in Sensitive Lands (see Title 10-14); and
5. Upon request of the City.

B. The geotechnical investigation should be complete in nature, and its findings shall be summarized in a Geotechnical Report. The Geotechnical Report shall be signed and sealed by a licensed Professional Engineer with expertise in the field of geotechnical engineering.

C. See Appendix B for requirements regarding the Geotechnical Report, including minimum testing requirements and design parameters.

SECTION 3 DESIGN STANDARDS

3.01 Required Improvements

A. See Chapter 11.04 for information on the required improvements.

B. See also Section 5 – Technical Specifications and Section 6 – Standard Drawings, Plans, and Details of this document for additional information.

3.02 Improvement Plans

A. Complete and detailed, and signed and sealed (in accordance with Utah Code 58-22-602) construction plans and drawings of improvements shall be submitted to the City for the review by the City Engineer prior to receiving final plat approval and prior to commencing construction. Per Chapter 11.04, no construction shall begin until plans have been checked and approved by the City Engineer, and final approval is granted by the City Council.

B. The following instructions are for the purpose of standardizing the preparation of drawings to obtain uniformity in appearance, clarity, size, and style. The plans and designs shall meet the standards defined in the specifications and drawings hereinafter outlined. The minimum information required on the drawings for improvements is as follows:

1. All drawings and/or prints shall be clear and legible and conform to industry standard engineering and drafting practices.
2. Drawings shall be legible and to a common scale when printed on 11”x17” paper.
3. Both plan view and centerline profile must be shown. On subdivisions along steep cross slopes, profiles for each side of the street may be required to be shown.
4. Plan and profiles shall indicate design and/or existing grades a minimum of 200 feet beyond the limits of the proposed project.
5. All wet utilities (water, sewer, storm drain, irrigation) shall be shown in plan and profiles views.

C. Each set of plans shall be accompanied by a separate sheet of details for special structures which are to be constructed and are not covered by the City Standards. All structures shall be designed in accordance with the minimum South Weber City Standards and approved by the City Engineer.

D. Separate drawings of elements of the South Weber City Standards shall not be required to be redrawn and submitted with the construction drawings unless specific deviations from the standards are requested for approval; however, the construction drawings shall refer to the specific items of the Standards that are to be incorporated into the Work.

E. The plan and profile construction plans shall be submitted in portable document format (“pdf”). Upon approval, the developer’s engineer shall provide the City Engineer with electronic files of the final plat and improvement plans in AutoCAD or other City Engineer approved format. A hard copy of the approved construction plans bearing the signature of

the City Engineer shall be kept available at the construction site. Prior to final acceptance by the City, the developer, developer's representative, contractor, or project engineer shall submit to the City Engineer a set of "as built" drawings for permanent City file record.

3.03 Sanitary Sewer Design

A. All design shall be in accordance with Utah Administrative Code R317.

1. Changes in pipe size shall occur in a manhole. Match 0.8 depth point of sewer lines. (R317-3-2-H)

B. All terminating sewer mains shall end with a city standard manhole.

C. Service lateral connection shall not be allowed in sewer manholes.

D. All sewer shall be gravity unless otherwise approved by the City.

E. Collection lines shall be located in public rights-of-way or private road rights-of-way. Collection lines shall not be located on private property (easements) without the express written permission form the City. If such case is granted, easement shall be a minimum width of 20' and shall be dedicated to the City of South Weber.

F. All sanitary sewer systems shall be public and shall connect to a public sewer line. Private sanitary sewer systems may be permitted on singularly owned property provided they discharge directly to a public sewer system and obtain the express written permission from the City.

3.04 Water Design

A. All design shall be in accordance with Utah Administrative Code R309.

B. Valves are required on all branches of tees and crosses. On unbroken lengths of water line, the maximum valve spacing is 1000-ft.

C. At dead end lines, including temporary dead ends, provide fire hydrant at termination point.

D. Where a water line crosses surface water, designer/engineer shall contact the DDW and the City prior to final design.

E. All fire lines shall meet public works standards but shall remain privately owned and maintained.

F. Fire hydrants

1. Fire hydrants are to be installed in locations as required by the fire code and approved by the Fire Marshal and City Engineer, with a minimum spacing of 500-ft.

2. Fire hydrants shall not be located within 10-ft of any sanitary sewer line or manhole.

3.05 Street/Road Design

A. Streets shall be designed in accordance with these Standards, standard engineering practices, and AASHTO and MUTCD guidelines.

B. Local (residential) streets shall have not less than 333' radius curves[2]

C. No changes of grade in excess of 1.5% shall be permitted without a vertical curve.

D. Sight triangles shall be shown at the request of the City Engineer.

E. Horizontal points of curvature shall not be located closer than 150' from the center of an intersection.

F. Intersections

1. Roadway centerlines shall intersect at 90-degrees. Where a 90-degree angle is not feasible, the intersection angle may be reduced to as low as 80-degrees with the City Engineer's concurrence. In no case shall the angle be less than 80-degrees.

2. Intersections shall be no closer than 500-ft to one another, as measured from centerline to centerline.

G. Cul-de-Sacs

1. Length of cul-de-sac shall not exceed 400-ft as shown in the Standard Drawings.

H. Pavement / Pavement Section

1. Developments

a. Pavement section shall be designed by the developer's geotechnical engineer and included in the Geotechnical Report submitted to the City. See Appendix B of this document for the Geotechnical Report Minimum Requirements, including testing requirements and design parameters.

2. City Projects

a. Pavement section shall be included in the Project plans.

3. See Appendix D, Sheet R1 for minimum pavement section and notes.

a. Both Development and City Projects must meet the minimum pavement section thicknesses. Where geotechnical pavement design thicknesses exceed the standard minimums, the geotechnical pavement design thicknesses shall govern.

I. Temporary Turnarounds

1. When turnaround cannot be constructed outside of subdivision, it shall be located on a portion of the subdivision lots (as needed) with the developer placing in escrow an amount of money sufficient to complete the street improvements to the subdivision boundary. These funds will be used at such time the street is extended.

2. The lot(s) on which the turnaround is constructed shall be restricted as follows:

a. Platted as "R" (restricted lot).

[2] AASHTO A Policy on Geometric Design of Highways and Streets (2018): Table 3-13, 30mph, *e* = -2.0%.

b. This lot cannot be sold or building permits issued until the road is extended beyond the subdivision boundary, complete with curb, gutter, and sidewalk.

3. Drainage onto adjacent property must be by written approval (easement) of adjacent property owner.

4. When a temporary turnaround is required at the end of a road where the road and the extension of the road are parts of an approved phased development, in lieu of constructing a paved temporary turnaround in accordance with the Standard Drawings:

a. When extension of the road is expected to begin construction within 12 months of conditional acceptance of the road and associated temporary turnaround, Developer may construct 12-inch thick untreated base course temporary turnaround (dimensions per the Standard Plans) and place in escrow the cost of asphalt paving.

b. If construction of the extension of the road has not begun within 12 months of conditional acceptance of the road and associated temporary turnaround, City may, at its discretion, utilize the monies in escrow to pave the temporary turnaround.

J. Landscaping

1. When landscaping is required to be designed/installed, refer to the Standard Drawings.

K. UDOT

1. Roadway intersections with UDOT controlled streets shall be in accordance with UDOT standards. A copy of the approved UDOT Access Permit shall be submitted to the City.

3.06 Storm Drain and Drainage Design

A. See Appendix A for Storm Drain and Drainage Design Standards.

1. Low Impact Development (See Appendix A)

2. 80th Percentile Storm Retention (See Appendix A)

SECTION 4 CONSTRUCTION STANDARDS

4.01 General Policies

A. General Conditions

1. Permit/License: When the work is in progress, Contractor shall have at the work site a copy of the permit and his contractor's license number.

2. Private access: Temporary all-weather roadways, driveways, walks, and rights-of-way for vehicles and pedestrians shall be constructed and continuously maintained where required.

3. Street excavation in winter: Excavation of City streets during the winter months (herein defined as November 15 to April 1) will be allowed only if the work is a new service connection, required maintenance or emergency, or otherwise approved by the Public Works Department. Permanent patching of City streets excavated in the winter may be delayed until April 1 with the following provisions: Within five working days from the completion of the excavation, the permittee provides/maintains a 1-1/2" thick temporary winter asphalt surface until such time as the permanent asphalt surface is installed; the permittee shall provide/maintain a temporary untreated base course surface until such time as the temporary winter asphalt surface is installed. These provisions apply regardless of whether the permittee or City crews are performing the permanent resurfacing.

4. Existing utilities: The contractor shall use extreme caution to avoid a conflict, contact, or damage to existing utilities, such as power lines, sewer lines, storm drains, streetlights, telephone lines, cable television lines, water lines, gas lines, poles, or other appurtenances during the course of construction of this project. Any such conflict, contact, or damage shall be immediately communicated to said utility company and the Public Works Department. All projects shall be “Blue Staked” prior to construction.

5. Preconstruction pictures of existing public way improvements: The permittee may secure pictures of the conditions of the existing public way improvements such as curbing, sidewalk, landscaping, asphalt surfaces, etc. In the event that public way improvements are damaged and no pictures are taken, the Public Works Department will assume the correction of the damage is the responsibility of the permittee.

B. Licensing

1. Contractor (including all sub-contractors) must be licensed with the State of Utah: It is the policy of South Weber City that contractors desiring to perform work in the City's public way shall be properly licensed in the State of Utah. The acceptable licenses shall be in accordance with UAC R156-55a-301.

2. Exceptions: A license shall not be required by the City when the permittee is a public utility company. However, subcontractors for utility companies shall have a valid contractor's license.

C. Permits

1. Developer/Contractor is responsible for obtaining all necessary permits for the construction of the Improvements prior to commencement of said Improvements. Agencies/permits required may include, but are not limited to:

2. Encroachment (City)

a. South Weber City's Department of Public Works issues permits to control any excavation and construction operations in the public right-of-way. All contractors, sub-contractors, and utility companies proposing to construct, repair, or replace any facility within the public right-of-way shall contact the South Weber City Building Department and complete all permit requirements prior to commencing proposed work.

b. Work by utility companies and their contractors in constructing facilities in new subdivision streets shall be required to post a bond with the City and will be subject to City inspection and compliance with all requirements.

c. Emergency Work

(i) Maintenance of pipelines or facilities in the public way may proceed without a permit when emergency circumstances demand the work be done immediately provided a permit could not reasonably and practicably have been obtained beforehand.

(ii) In the event that emergency work is commenced on or within any public way of the City, the Public Works Department shall be notified within one-half hour when the work commences or as soon as possible from the time the work is commenced. Contact shall be made to the City's "on call" personnel. If emergency work is commenced during off business hours, the Public Works Department will be notified within one (1) hour of the start of work on the first regular business day of which City offices are open after such work commences, and, at the discretion of the Public Works Department, a permit may be issued which shall be retroactive to the date when the work was begun. Before commencing the emergency work, all necessary safety precautions for the protection of the public and the direction and control of traffic shall be taken. None of the provisions of these regulations are waived for emergency situations except for the prior permit requirement.

d. Enforcement: Violators of these regulations of working within the Public Way shall be subject to the provisions of the applicable South Weber City Municipal Code.

3. USACE/DWRi Stream Alteration – Stream Alteration

4. UPDES
5. Dam Safety (DWRi)
6. UDOT
7. Davis County Surveyor's Monument
8. Excavation Operations
    a. Blue Stakes: Before commencing excavation operations, the permittee shall call "Blue Stakes" at 1-800-662-4111 or 811.
9. Traffic control devices: Traffic control devices such as construction signs, barricades, and cones must be in place before excavation begins.
10. Protection of paved surfaces outside of excavation area: In order to avoid unnecessary damage to paved surfaces, backhoes, outriggers, tracked equipment, or any other construction equipment that may prove damaging to asphalt shall use rubber cleats or paving pads when operating on or crossing said surfaces.
11. Open trench limits: Open trenches will be limited to one block at a time or 660 feet, whichever is less.
12. In the event of a planned road closure, Contractor shall notify the City, Fire Department, emergency services dispatch, US Postal Service, and Davis School District a minimum of 24 hours prior to the closure. In the case of an emergency, the above listed agencies will soon be notified at the soonest possible time.
13. Environmental Controls
    a. Dust and debris: The permittee or contractor shall keep dust and debris controlled at the work site at all times. If necessary, a container shall be provided for debris and dusty areas shall be wet down. The permittee or contractor shall be responsible for the cleanup of mud or debris from public roads deposited by vehicles or construction equipment exiting the work site. The City Engineer reserves the right to shut down the work or issue a citation if dust is not controlled.
    b. Noise: The permittee or contractor shall keep neighborhood free of noise nuisance in accordance with the Noise Ordinance.
14. Cleanup: The permittee or contractor shall remove all equipment, material, barricades, and similar items from the right-of-way. Areas used for storage of excavated material will be smoothed and returned to their original contour. Vacuum sweeping or hand sweeping shall be required when the Building Department determines cleaning equipment is ineffective.
15. Storm Water: All Contractors working within the boundaries of South Weber City shall conform to all requirements and regulations as outlined by the South Weber City Storm

Water Management Plan. Copies of the plan are available in the South Weber City Offices.

4.02 Pre-Construction Conference

A. The pre-construction conference shall not be held until the City Engineer has approved and signed the construction plans.

B. A preconstruction conference shall be held before any excavation or other work is begun in the subdivision or Project. The meeting will include:

1. City Engineer
2. Developer or Project Manager
3. Subdivision or Project Engineer
4. All contractors and subcontractors involved with installing the subdivision or project improvements
5. Representatives of affected South Weber City Departments
6. Representatives of local utility companies as may be required by South Weber City.

C. Items pertaining to the construction and inspection of the subdivision or Project improvements will be discussed.

4.03 Construction

A. Specifications

1. Contractor shall be responsible for constructing all improvements in accordance with the Technical Specifications, per Section 5 of this document.
2. Deviations from such shall be reviewed and authorized by the City Engineer on a case-by-case basis.

B. Plans and Details

1. Contractor shall be responsible for constructing all improvements in accordance with the Drawings, Plans, and Details, per Section 6 of this document.
2. Deviations from such shall be reviewed and authorized by the City Engineer on a case-by-case basis.
3. In the event that as-built conditions of the improvements are found to be out of compliance with the approved improvement plans and tolerances contained in these Standards, it shall be the contractor's responsibility to remove those improvements and replace them with improvements that comply with the approved improvement plans, and are within the given tolerances. Adjacent improvements may also require replacement in order to bring all improvements into compliance.

C. Sequence/Timing

1. All underground utility work shall be completed prior to placement and compaction of the roadway base course. Utilities, including service lines, not installed prior to roadway construction shall be bored as approved by the Public Works Director.
2. All concrete collars shall be installed within fourteen (14) days of asphalt placement.

D. Inspection

1. All construction work involving the installation of improvements in the subdivision or project shall be subject to inspection by the City. It shall be the responsibility of the person responsible for construction to insure that inspections take place where and when required. Certain types of construction shall have continuous inspection, while others may have only periodic inspections.

E. Requests for Inspections

1. Requests for inspections shall be made to the Public Works Department by the person responsible for the construction.
2. Requests for inspection on work requiring continuous inspection shall be made three (3) working days prior to the commencing of the work.
3. Notice shall also be given one (1) day in advance of the starting of work requiring periodic inspection, unless specific approval is given otherwise by the City Engineer, or his duly authorized representatives.

F. Continuous Inspection

1. May be required on (but not limited to) the following types of work:
   a. Laying of street surfacing
   b. Placing of concrete for curb and gutter, sidewalks, and other structures
   c. Laying of sewer pipe, irrigation pipe, drainage pipe, water mains, water service laterals and testing.
2. On construction requiring continuous inspection, no work shall be done except in the presence or by permission of the City Engineer or authorized city representative.

G. Periodic inspections

1. Shall be required on (but not limited to) the following types of work:
   a. Street grading and gravel base
   b. Excavations for curb and gutter and sidewalks
   c. Excavations for structures
   d. Trenches for laying pipe
   e. Forms for curb and gutter, sidewalks and structures

H. Substantial and Final Completion Inspections

1. A substantial completion inspection shall be requested by the Contractor and made by the City Engineer or authorized representative after all construction work is completed. Any faulty or defective work shall be corrected by the persons responsible for the work within a period of thirty (30) days of the date of the City Engineer's or authorized representative's Punchlist defining the faulty or defective work.
2. A final completion inspection shall be requested by the Contractor and made by the City Engineer or authorized representative after all faulty and defective work has been corrected.

I. Testing

1. Development Projects
   a. Developer/Contractor shall select a properly licensed and qualified testing agency.
   b. Developer/Contractor shall be responsible for coordinating all testing in accordance with the Technical Specifications per Section 5 of this document.
   c. Testing reports shall be submitted to City weekly for review. Areas with failed tests shall be corrected and retested.
   d. Failure to have improvements tested as they are constructed may be cause for work stoppage or rejection by City.
2. City Projects
   a. Contractor shall select a properly licensed and qualified testing agency.
   b. Contractor shall be responsible for coordinating all testing in accordance with the Technical Specifications per Section 5 of this document.
   c. Testing reports shall be submitted to City weekly for review. Areas with failed tests shall be corrected and retested. Contractor may be required to pay for retesting.
   d. Failure to have improvements tested as they are constructed may be cause for work stoppage or rejected by City.

J. Safety

1. Contractor is solely responsible for jobsite safety.
2. Contractor shall comply with all local, state, and federal rules and regulations regarding jobsite safety.
3. City and/or its authorized representatives shall have the authority to shut down a job when unsafe working conditions are found.

SECTION 5 TECHNICAL SPECIFICATIONS

5.01 Technical Specifications for South Weber City

A. Adoption of Divisions 01 through 34 of the Manual of Standard Specifications, as published by Utah LTAP Center, Utah State University, Logan, Utah, current edition, with all published amendments.

B. Modifications and Additions to Manual of Standard Specifications (see Appendix C)

5.02 Order of Precedence

A. Approved project-specific specifications (when applicable)

B. Modifications and Additions to Manual of Standard Specifications

C. Manual of Standard Specifications, current edition, with all published amendments

SECTION 6 STANDARD DRAWINGS, PLANS, AND DETAILS

6.01 Standard Drawings, Plans, and Details for South Weber City

A. South Weber City Public Works Standard Drawings, current edition (See Appendix D)

B. Adoption of Manual of Standard Plans, published by Utah LTAP Center, Utah State University, Logan, Utah, current edition, with all published amendments.

6.02 Order of Precedence

A. Approved project-specific drawings and details (when applicable)

B. South Weber City Public Works Standard Drawings, current edition

C. Manual of Standard Plans, current edition, with all published amendments, when not covered by one of the aforementioned items

APPENDIX A – STORM DRAIN AND DRAINAGE DESIGN STANDARDS

APPENDIX A

STORM DRAIN AND DRAINAGE DESIGN STANDARDS

TABLE OF CONTENTS

A1. General Provisions 1
A2. Definitions and Acronyms 1
A3. Rainfall Hydrology 4
A4. Storm Drain System 6
A5. Detention and Retention Basins 7
A6. Water Quality 11
A7. 80th Percentile Storm Retention 11
A8. Low Impact Development 12

EXHIBITS

1. NOAA Point Precipitation Frequency Estimates – Intensity
2. NOAA Point Precipitation Frequency Estimates – Depth
3. Summary of Allowable LID BMPs

A1. General Provisions

A. This document represents the reporting, design and construction standards for private and public design and construction as it relates to storm drainage within the City.

B. A Storm Water Report is required for all new development and redevelopment projects.

C. Implementation of LID measures and 80th percentile storm retention does not reduce or eliminate the requirement for detention/retention as contained in this document, but may be included within the designed detention/retention volumes calculated.

A2. Definitions and Acronyms

The following terms shall be defined as follows in this document related to storm water:

A. 80th Percentile Storm – The rainfall event whose precipitation total is greater than or equal to 80 percent of all storm events over a given period of record.

B. Best Management Practices (BMPs) – Construction practices and control measures necessary to protect against pollution generated by construction sites.

C. Common Plan of Development – "Common plan of development or sale" means one plan for development or sale, separate parts of which are related by any announcement, piece of documentation (including a sign, public notice or hearing, sales pitch, advertisement, drawing, plat, blueprint, contract, permit application, zoning request, computer design, etc.), physical demarcation (including contracts) that identify the scope of the project. A plan may still be a common plan of development or sale even if it is taking place in separate stages or phases, is planned in combination with other construction activities, or is implemented by different owners or operators.[1] Common plans of development may be residential, commercial, or industrial in nature.

D. Detention Basin – A water storage pond designed to store a volume of water that reduces the post-development peak runoff of a storm to the pre-development runoff rate or other rate as defined by the governing body. This is accomplished by the use of an outlet which controls the rate of flow out of the pond into the receiving storm drain or water body. Detention ponds contain an inlet, outlet, and spillway; the inlet and outlet may be one and the same. The detention basin is intended to drain the storm water within a period of time to make the volume available for the next storm event.

E. Development – Any man-made change to unimproved land, including but not limited to site preparation, excavation, filling, grading, paving, and construction of buildings or other structures.

[1] General Permit for Discharges from Small Municipal Separate Storm Sewer Systems (MS4s); State of Utah Department of Environmental Quality, Division of Water Quality; May 12, 2021.

F. Disturb – To alter the physical condition, natural terrain or vegetation of land by clearing, grubbing, grading, excavating, filling, building or other construction activity.

G. Drain Inlet – A point of entry into a sump, storm water basin, or storm drain system.

H. Drinking Water Source Protection Zone – Zones determined by geo-hydrology designed to protect groundwater aquifers of a well in a culinary water system.

I. DWQ – Acronym for Division of Water Quality, a division of the UDEQ.

J. Freeboard – The vertical distance between the emergency spillway and the top of the basin embankment.

K. General Permit for discharges from MS4 (Permit) – Authorization for a municipal separate storm sewer system to discharge storm water into waters of the United States.

L. Hardscape – Generally impervious areas, typically streets, sidewalks, driveways, parking areas, and roofs.

M. Infiltration – The movement of water through the soil surface and into the soil;[2] the movement of water downward from the ground surface through the upper soil.[3]

N. Infiltration Rate – The rate at which water actually enters the soils during a storm.[2]

O. Infiltration System (storm water) – A system which is designed to return storm water runoff into an underground aquifer.

   1. Bioretention facilities, rain gardens, and tree boxes that are designed to slow down and hold storm water runoff for biological treatment and use by vegetative uptake are not considered to be infiltration systems if they are not isolated from groundwater. Groundwater isolation may be achieved with impermeable liners or an underdrain that <u>does not</u> discharge into a dug, bored, drilled or driven well, improved sinkhole or other subsurface fluid distribution system.

   2. The discharge of storm water piping below grade for the purpose of infiltration is considered a Class V injection well facility.

P. Injection Well, Class V – As defined in Utah Administrative Code R317-7-2:

   1. A bored, drilled, or driven shaft whose depth is greater than its largest surface dimension, OR

   2. A dug hole whose depth is greater than its largest surface dimension, OR

   3. An improved sinkhole, OR

   4. A subsurface fluid distribution system.

---

[2] Linsley/Franzini/Freyberg/Tchobanglous. (1992). *Water Resources Engineering and Environmental Engineering.* New York: McGraw-Hill Inc.

[3] Lindeburg. (2003). *Civil Engineering Reference Manual.* Belmont, CA: Professional Publications, Inc.

Q. Low Impact Development (LID) – An approach to land development (or re-development) that works with nature to more closely mimic pre-development hydrologic functions, reduces or minimizes the quantity of storm water runoff, and protects or improves water quality in receiving water bodies.

R. LID Analysis and Report – A written analysis of a development or redevelopment site that (1) identifies appropriate methods to reduce storm water runoff, (2) identifies the pollutants to target for each drainage area, and (3) selects appropriate structural controls to implement on the site.

S. Municipal Separate Storm Sewer System (MS4) – The storm water conveyance system owned by the City which includes streets, catch basins, curbs, gutters, ditches, man-made channels, or storm drains. For a full definition, see UAC 317-8.

T. Outlet – The discharge mechanism of a detention basin, typically a pipe containing a head gate or orifice to control the release of water out of the basin.

U. Percolation – The movement of water through the subsurface soil layers, usually continuing downward to the groundwater table,[3] measured by a Standard Percolation Test in units of minutes per inch.

V. Pollutant – Chemicals, sediment, trash, disease-carrying organisms, and other contaminants picked up by storm water which is conveyed into rivers, streams, and other water bodies.

W. Redevelopment – Alteration of a property that change the footprint of a site or building.

X. Retention Basin –A water storage pond designed to store the runoff volume of a storm and dispose of water through percolation, infiltration, and evaporation within a period of time to make the volume available for the next storm event. A retention basin contains an inlet and spillway, but no structural outlet.

Y. Softscape – Generally pervious areas, such as native vegetation and landscaped areas.

Z. Spillway, Emergency – A storm drain basin feature that controls and guides storm water as it spills over the basin's embankment.

AA. Spillway, Internal – A storm drain basin feature that allows excess water to leave the basin through discharge piping which is set at an elevation below the emergency spillway.

BB. Storm Drain System – The system of conveyances (including but not limited to catch basins, detention basins, retention basins, infiltration galleries, curbs, gutters, ditches, cross drains, roads, man-made channels, sumps, pipes, etc.) owned and operated by the City, which is designed and used for collecting and/or conveying storm water.

CC. Storm Water Pollution Prevention Plan (SWPPP) – A written plan that evaluates and minimizes the impact of pollutants on storm water through the use of control measures and activities that target pollution sources. A SWPPP template can be found on the UDEQ Water Quality website.

DD. Storm Water Report – A written analysis of a development or redevelopment site that

estimates the volume and rate of storm water runoff generated by the proposed improvements. The report details rationale and calculations for establishing the sizes of storm water piping and storage facilities in compliance with this document. This Report shall also contain the calculations for determining the 80th Percentile Storm volume and methods evaluated and selected to manage the rainfall on-site.

1. This Report may be combined with the LID Analysis and Report.

EE. Storm Water Runoff – Precipitation that is not intercepted or otherwise captured at a site which eventually enters into natural water bodies such as rivers, streams, and lakes.

FF. Subsurface Fluid Distribution System – An assemblage of perforated pipes, drain tiles, or other similar mechanisms intended to distribute fluids below the surface of the ground. (i.e. infiltration galleries, underground retention)

GG. UAC – Acronym for Utah Administrative Code.

HH. UDEQ – Acronym for Utah Department of Environmental Quality.

A3. Rainfall Hydrology

A. All storm drain systems shall be designed to carry the 100-year storm, unless otherwise stated.

B. Storm Specifications

1. Local storm drain piping shall be designed for the 10-year storm, where the road or other above ground conveyance will carry the difference to the 100-year storm.
2. Storm drain piping connecting two (2) streets through private property shall be designed for the 100-yr storm.
3. Local detention basins, including all piping into the basin from the nearest point of entry shall be designed to accommodate a 10-year storm event with a maximum discharge of 0.1 cubic feet per second (cfs).
4. Local retention basins, including piping into the basin from the nearest point of entry, shall be designed to accommodate the 100-year 2-hour storm.
5. Regional detention basins, including all piping into the basin from the nearest point of entry, shall be designed to accommodate the 100-year storm event.
6. The storm duration used for the sizing of basins shall be based upon the worst-case scenario. The time of concentration shall be calculated and shown.
7. See Exhibits 1 and 2 for rainfall data.

C. Hydrologic Methodology

1. Parameters

a. Hardscape – Proposed streets and sidewalk areas plus the estimated hardscape areas (roofs, driveways, patios, walkways etc.) determined by using a recent subdivision with similarly sized lots, or calculated area as measured from approved site plan.

b. Softscape – The remaining area of the subdivision not hardscape.

2. Developments less than 20 acres

a. The Rational Method may be used. A computer model may also be used. See paragraph 3 for more information.

b. Rainfall Intensity – When using the Rational Method, use the rainfall intensity table provided in Exhibit 1 of this document.

c. Runoff Coefficients – The following C-values shall be used when using the Rational Method:

i. Hardscape – 0.90

ii. Softscape (open space, landscaping) – 0.25

iii. Values from published sources may be used when pre-approved by the City Engineer.

3. Developments larger than 20 acres

a. A City Engineer-approved computer model shall be used.

b. Rainfall Pattern and Depth – The following rainfall pattern shall be used. This pattern is based on the Farmer-Fletcher Distribution. This pattern is for a 1-inch unit storm and must be multiplied by rainfall depth for storms of other magnitudes, as provided in Exhibit 2.

Farmer-Fletcher Distribution
Unit Storm

Time (Min.)	Depth (inches)	Time (Min.)	Depth (inches)	Time (Min.)	Depth (inches)	Time (Min.)	Depth (inches)	Time (Min.)	Depth (inches)	Time (Min.)	Depth (inches)
1	0	11	0.004	21	0.033	31	0.052	41	0.012	51	0.005
2	0	12	0.005	22	0.034	32	0.045	42	0.011	52	0.005
3	0.002	13	0.008	23	0.035	33	0.04	43	0.01	53	0.004
4	0.002	14	0.009	24	0.038	34	0.035	44	0.009	54	0.004
5	0.002	15	0.009	25	0.039	35	0.03	45	0.009	55	0.004
6	0.002	16	0.013	26	0.045	36	0.022	46	0.008	56	0.003
7	0.002	17	0.017	27	0.052	37	0.02	47	0.006	57	0.003
8	0.002	18	0.02	28	0.054	38	0.018	48	0.006	58	0.002
9	0.003	19	0.024	29	0.054	39	0.016	49	0.005	59	0.002
10	0.003	20	0.029	30	0.054	40	0.014	50	0.005	60	0.001

A4. Storm Drain System

A. Independent System

1. Storm waters shall not be conveyed in irrigation ditches.
2. Irrigation waters shall not be conveyed in storm drain systems.

B. Groundwater

1. Where adverse groundwater conditions exist, the City may allow the installation of a subsurface land drain system. Laterals may be installed to each lot for clear groundwater only (surface water may be permitted only upon approval from the City Engineer). Subsurface lines shall be installed with a slope adequate for proper drainage. A backflow control device may be required at the confluence of the land drain system and storm drain system, as determined by the City Engineer.

C. Piping

1. Storm Drain Lines
   a. All storm drain lines that are considered to be part of the City's storm drain system shall be reinforced concrete pipe (RCP), of appropriate class when installed in the public right-of-way.
   b. Minimum size for storm drain mains shall be 15-inch diameter.
   c. Public storm drain pipes shall not be curved.
   d. See Section A3 for sizing requirements.
2. Land Drain Lines
   a. All land drains shall be PVC or RCP.
   b. Minimum size for land drain mains shall be 8-inch diameter.
   c. Minimum size for land drain laterals shall be 4-inch diameter.
3. Pipe specifications are included in Section 5 of the Public Works Standards.
4. Reimbursement / Pioneering Agreements – Where determined by the City Engineer and/or the Storm Drain Capital Facilities Plan, larger drain lines shall be installed to accommodate future development. The cost to provide adequate storm drainage for a development shall be paid for by the Developer. Upsizing will be coordinated at the time of development. The cost of upsizing will be the responsibility of the City or as defined in the agreement.

D. Access – Storm drain lines shall have cleanout boxes, inlets, or manholes installed at all changes in grade or alignment, with a maximum distance of 400 feet between accesses. Structures shall be installed in accordance with the standard specifications and Standard Drawings.

E. Sumps

1. Sumps are not allowed in the City's storm drain system, except as approved by the City Engineer on a case-by-case basis.
2. Sumps shall not be permitted within zones 1, 2, or 3 of any Drinking Water Source Protection Zone of any drinking water source.
3. Class V Injection Well permitting is required.

F. Grates

1. Grates shall be provided at all entrances/exits of the storm drain system, and on the upstream end of all culverts greater than 50-ft in length.
2. Grates shall be provided on catch basins, junction boxes, control structures, etc.
3. Bar spacing shall be designed for location, function, and safety. (Generally, bar spacing should not exceed three (3) inches.)

A5. Detention and Retention Basins

A. When Required

1. Storm drainage basins are required for all development; however, residential developments less than one (1) acre are not required to have detention or retention, except when determined by the City Engineer.
2. In an effort to increase the City's ability to more easily manage storm events, Regional Detention Basins shall be constructed wherever possible, as shown in the City's Storm Water Capital Facilities Plan.
3. As shown in the City's Storm Water Capital Facilities Plan, Developer may be required to participate in the construction of a new regional detention basin or the upgrading of an existing detention basin that is designated as a regional detention basin in lieu of onsite detention within the proposed development, if the development is located within a regional detention basin's drainage subbasin.

B. Basin Property, Easement, and Access

1. Public Basins – Public basins shall be located on a separate parcel dedicated to the City with frontage along a public roadway. The developer shall provide the City permanent access to any public basin.
2. Private Basin – Private basins serving multiple lots shall be located on a separate parcel, owned by the home-or land-owners association. Private basins serving a single lot shall be located within the lot. The City shall be provided an easement to, around, and across the basin for emergency access, operation, and/or repair for a private basin.
3. Access – Each basin shall be constructed with sufficient, all-weather, drivable access to all structures from a public street. A turnaround area shall be provided at the termination of the access road.

C. Maintenance and Ownership

Actual ownership and responsibility shall be specifically defined in the Owner's Dedication, Certificates, Development Agreements, or by Deed.

1. Local Basins – Local basins shall be constructed by the developer. Following conditional acceptance of the construction, the operation and maintenance shall be conveyed to the City when applicable.
2. Regional Basins – Regional basins shall be owned and maintained by the City, constructed according to the criteria herein, and approved of the City Engineer.
3. Private Basins
   a. Single Lots (Non-residential only) – When approved, private basins shall be owned and maintained by the property owner.
   b. Multiple Lots – When approved, private basins shall be owned and maintained by the Homeowners' Association.
   c. Access may be provided from a private street provided an access easement is granted to the City providing access to/from the basin from a public street.
   d. For all private basins, Developer is required to enter into a Long-Term Storm Water Maintenance Agreement with the City.

D. Basin Volume

1. All basin designs and calculations shall be included in the Storm Water Report and submitted to and reviewed by the City Engineer for approval.
2. Volume shall be measured to the internal spillway (overflow) elevation.
3. Volume in pipes, ditches, or roadside swales shall not be considered in the volume calculation for detention and retention basins.
4. Above-grade storage of water shall not be allowed in parking lots.

E. Allowable Discharge Design

1. See Section A3.B for storm specifications.
2. Discharge shall not exceed the <u>lesser</u> of:
   a. Pre-development runoff with pre-development, meaning the condition of the land prior to settlement, or
   b. The discharge rate determined by using the standard rate of 0.1 cubic feet per second per total acre.

   Show all calculations or provide spreadsheet or program file.
3. Calculations shall be based on the total acreage of the development draining to the basin.

4. Pass-through of offsite drainage through the development must be considered and will be allowed.

F. Detention and Retention Basin Elements

1. Depth – Basins should not exceed three (3) feet in depth as determined from its lowest point to the overflow or spillway, unless otherwise approved by the City.
2. Side slopes – Side slopes shall not be steeper than 4:1 (horizontal to vertical).
3. Bottom Slope – The basin floor shall be designed so as to prevent the permanent ponding of water. The slope of the floor of the basin shall not be less than 1% to provide drainage of water to the outlet grate and prevent prolonged wet, soggy, or unstable soil conditions.
4. Freeboard – At least one (1) foot of freeboard is required (berm above the high water mark).
5. Spillways
   a. The spillway shall be designed to carry the 200-year storm flow minus the 100-year storm flow which is handled by the outlet control structure.
   b. Spillways shall introduce flows back into the pipe or stream downstream of the outlet control.
   c. Spillways shall include a maintained swale and drainage easement to a safe location.
   d. The spillway shall be designed to prevent erosion.
   e. All spillways shall be designed to protect adjacent embankments, nearby structures, and surrounding properties.
6. Ground Covers – The surface area of the basin shall be sodded. Use seed mixture found in the Technical Specifications. A minimum of four (4) inches of top soil must be installed prior to sod placement. A sprinkler irrigation system is also required for all grassed basins. Developer/contractor is responsible for establishing vegetation.
7. Embankment (Fill) Construction – If a raised embankment is constructed for a basin (constructed with granular materials), it shall be provided with a minimum of 6-inches of clay cover on the inside of the berm to prevent water passage through the soil.
8. Excavation (Cut) Construction – If the basin is constructed primarily by excavation, then it may be necessary to provide an impermeable liner and land drain system when constructed in the proximity of basements or other below grade structures as determined by a geotechnical evaluation.
9. Multi-Use Basins – Basins may be designed as multi-use facilities when appropriate precautions are incorporated into the design. If amenities such as pavilions, playground equipment, volleyball courts, etc. are to be constructed within the water detention area of a basin, they shall be designed appropriately. Structures shall be designed for saturated soil conditions and bearing capacities are to be reduced accordingly. Restrooms shall not be located in areas of inundation. Inlet and outlet structures should be located as far as possible from all facilities. No wood chips or floatable objects may be used in the area that will be inundated.

10. Fencing – A conveniently-located access gate, appropriately sized for entrance by maintenance vehicles and equipment, shall be provided for fenced basins. Fencing should not be located at the top of the basin embankment where maintenance equipment, vehicles, and personnel need access. Fencing shall be a minimum of 6-ft tall, with material in accordance with these Public Works Standards and City Zoning Requirements.

G. Detention Basins
   1. Percolation – No reduction due to percolation for detention basins volumes shall be permitted.
   2. Outlet Control
      a. Private detention basins may have a calculated fixed orifice plate mounted on the outlet of the basin.
      b. Public detention basins shall have movable, screw-type head gates set at the calculated opening height with a stop block required to carry the maximum allowable discharge.
   3. Low Flow Piping – The inlet and outlet structures may be located in different areas of the basin, requiring a buried pipe to convey any base flows that enter and exit the basin. (Cross gutters and surface flows are prohibited.) The minimum pipe size and material for the low flow pipe shall be 15-inch RCP or as otherwise specified by the City Engineer.
   4. Oil/Sediment Separators
      a. Sizing and design of oil/sediment separators shall be reviewed by the City Engineer and City Personnel prior to installation.
         i. Manufacturer's recommendations for sizing must be followed with calculations submitted to the City.
         ii. Consideration must be given to frequency and ease of maintenance of the structure
         iii. Separator should be installed upstream of detention basin and appropriately sized for such location.
      b. Any site dealing with large parking lots or particularly dirty parking lots such as auto repair and maintenance will be required to have an oil separator
      c. Private basins shall have contracts in place with a local sewer company to periodically clean the Separator (at least annually).

H. Retention Basins (excludes 80th Percentile Storm Retention, See Section A7)
   1. Retention basins must be specifically approved by the City Engineer.
   2. Retention basins shall not be permitted within zones 1, 2 or 3 of any Drinking Water Source Protection Zone of any drinking water source.
   3. An approved oil/sediment separator shall be installed upstream of retention basin.
   4. Retention Basin Criteria – Retention basins may be permitted if the following conditions apply:
      a. The distance between the nearest City storm drain and the boundary of the development is greater than:

i. For residential development: 500 feet or 50 feet times the number of lots in the entire development (whichever is greater);
ii. For commercial development: 20 feet times the number of parking stalls on site.

b. The basin is not located within a Hazardous Area (such as a steep slope) or some other sensitive area (such as a Drinking Water Source Protection Zone).
c. Site is topographically incapable of draining to the City system.
d. Recommendation by the City Engineer.

5. Percolation Rate for Retention Basins
   a. A percolation test shall be performed by a licensed tester. The percolation test shall be performed at the elevation of the proposed grade of the bottom of the retention basin.
   b. Due to degradation of soils ability to percolate over time, only 80% of the percolation rate shall be used in the calculations for the retention basins.
6. Retention basins shall be designed to completely drain within 48 hours of the primary storm event.

I. Subsurface Fluid Distribution Systems

1. Subsurface Fluid Distribution Systems are allowed for private basins only.
2. See Paragraph H for requirements related to Percolation Rate for Retention Basins.
3. A Class V injection well permit is required.
4. An approved oil/sediment separator shall be installed upstream of subsurface fluid distribution system.
5. Subsurface Fluid Distribution Systems are not allowed for storm water disposal if located in Zone 1 or 2 of a drinking water source. They may be allowed in Zone 3 or 4 of a drinking water source if they are equipped with appropriate pretreatment and approved by the City Engineer.
6. Examples of Subsurface Fluid Distribution Systems include but are not limited to: ADS StormTech® systems, ACF Environmental R-Tanks® and similar; perforated pipe infiltration galleries, etc.

A6. Water Quality

A. Long-term Best Management Practices (BMPs) shall be used to maintain, to the maximum extent practical, the quality of the water to the pre-developed condition.

B. Construction BMPs shall be implemented per the City's Storm Water Management Plan.

A7. 80th Percentile Storm Retention

A. All new development and redevelopment projects equal to or greater than one (1) acre, or projects that are less than one (1) acre that are part of a larger common plan of development or sale, shall be required to manage rainfall on-site, and prevent the off-site discharge of the precipitation from all rainfall events less than or equal to the 80TH

percentile rainfall event [storm]. This objective must be accomplished by the use of practices that are designed, constructed, and maintained to infiltrate, evapotranspiration, and/or harvest and reuse rainwater. If meeting this retention standard is technically infeasible, a rationale shall be provided on a case-by-case basis for the use of alternative design criteria. The project must document and quantify that infiltration, evapotranspiration, and rainwater harvesting have been used to the maximum extent technically feasible and that full employment of these controls are infeasible due to site constraints.[3]

B. In South Weber City, the 80th percentile storm has been determined to be 0.43 inches of depth.

C. The intent is to manage water as close as possible to the point at which it falls.

D. Calculations and implementation rationale must be contained in the Storm Water Report.

E. LID measures should be implemented to meet the 80th Percentile Storm requirements.

F. Implementation of this retention standard does eliminate the requirement for detention/retention basins as described in Section A5, but may be included within the designed detention/retention volumes calculated.

A8. Low Impact Development

All new development and redevelopment projects equal to or greater than one (1) acre, or projects that are less than one (1) acre that are part of a larger common plan of development or sale, shall be required to evaluate Low Impact Development (LID) approaches to infiltrate, evapotranspiration, and/or harvest and use storm water from the site to protect water quality.[4]

A. Structural controls may include green infrastructure practices such as:

1. Rainwater harvesting (e.g. rain barrels)
2. Rain gardens
3. Permeable pavement or pavers (not permitted on public streets)
4. Vegetated swales
5. Preservation of vegetation (non-disturbance)
6. Xeriscaping
7. Others as approved by the City Engineer

B. LID approaches must be evaluated and detailed in a LID Analysis and Report, which shall be submitted to and approved by the City Engineer.

[4] Adapted from General Permit for Discharges from Small Municipal Separate Storm Sewer Systems (MS4s); State of Utah Department of Environmental Quality, Division of Water Quality; May 12, 2021.

C. If an LID approach cannot be utilized, the Applicant must document an explanation of the reasons preventing this approach and the rationale for the *chosen alternative controls* on a case by case basis for each project.[3]

D. Implementation of LID measures does not eliminate the requirement for detention/retention basins as described in Section A5 but may be included within the designed detention/retention volumes calculated.

EXHIBIT 1 – NOAA POINT PRECIPITATION FREQUENCY ESTIMATES - INTENSITY

NOAA Atlas 14, Volume 1, Version 5
Location name: Ogden, Utah, USA*
Latitude: 41.1331°, Longitude: -111.9381°
Elevation: 4511.67 ft**
* source: ESRI Maps
** source: USGS

POINT PRECIPITATION FREQUENCY ESTIMATES

Sanja Perica, Sarah Dietz, Sarah Heim, Lillian Hiner, Kazungu Maitaria, Deborah Martin, Sandra Pavlovic, Ishani Roy, Carl Trypaluk, Dale Unruh, Fenglin Yan, Michael Yekta, Tan Zhao, Geoffrey Bonnin, Daniel Brewer, Li-Chuan Chen, Tye Parzybok, John Yarchoan

NOAA, National Weather Service, Silver Spring, Maryland

--- Intensity ---

PF_tabular | PF_graphical | Maps_&_aerials

PF tabular

PDS-based point precipitation frequency estimates with 90% confidence intervals (in inches/hour)[1]

Duration	Average recurrence interval (years)									
	1	2	5	10	25	50	100	200	500	1000
5-min	1.73 (1.50-2.02)	2.17 (1.90-2.54)	2.95 (2.56-3.46)	3.67 (3.16-4.31)	4.84 (4.06-5.71)	5.93 (4.82-7.08)	7.21 (5.68-8.70)	8.74 (6.62-10.8)	11.2 (8.04-14.2)	13.6 (9.24-17.6)
10-min	1.31 (1.13-1.54)	1.65 (1.45-1.94)	2.25 (1.94-2.63)	2.80 (2.40-3.28)	3.68 (3.08-4.35)	4.51 (3.67-5.38)	5.48 (4.31-6.62)	6.65 (5.04-8.19)	8.54 (6.11-10.8)	10.3 (7.03-13.4)
15-min	1.08 (0.936-1.27)	1.36 (1.19-1.60)	1.86 (1.61-2.18)	2.31 (1.98-2.71)	3.04 (2.55-3.60)	3.72 (3.03-4.45)	4.53 (3.56-5.47)	5.50 (4.16-6.77)	7.06 (5.05-8.96)	8.52 (5.81-11.1)
30-min	0.730 (0.632-0.854)	0.918 (0.802-1.08)	1.25 (1.08-1.46)	1.56 (1.33-1.82)	2.05 (1.72-2.42)	2.51 (2.04-3.00)	3.05 (2.40-3.68)	3.70 (2.80-4.56)	4.75 (3.40-6.03)	5.74 (3.91-7.46)
60-min	0.452 (0.391-0.529)	0.568 (0.496-0.668)	0.773 (0.670-0.906)	0.962 (0.826-1.13)	1.27 (1.06-1.50)	1.55 (1.26-1.85)	1.89 (1.49-2.28)	2.29 (1.74-2.82)	2.94 (2.11-3.73)	3.55 (2.42-4.62)
2-hr	0.294 (0.259-0.338)	0.367 (0.324-0.422)	0.474 (0.416-0.544)	0.575 (0.499-0.663)	0.742 (0.630-0.863)	0.896 (0.742-1.05)	1.08 (0.865-1.28)	1.30 (1.00-1.57)	1.65 (1.20-2.06)	1.97 (1.37-2.53)
3-hr	0.226 (0.203-0.256)	0.279 (0.250-0.317)	0.348 (0.310-0.395)	0.414 (0.365-0.470)	0.520 (0.450-0.595)	0.619 (0.524-0.716)	0.739 (0.610-0.867)	0.881 (0.705-1.05)	1.12 (0.848-1.39)	1.33 (0.971-1.70)
6-hr	0.152 (0.139-0.168)	0.186 (0.170-0.206)	0.224 (0.204-0.248)	0.259 (0.234-0.288)	0.312 (0.278-0.348)	0.356 (0.313-0.400)	0.409 (0.353-0.466)	0.469 (0.395-0.542)	0.586 (0.477-0.702)	0.692 (0.547-0.861)
12-hr	0.097 (0.089-0.107)	0.119 (0.108-0.131)	0.143 (0.130-0.158)	0.164 (0.148-0.181)	0.196 (0.175-0.218)	0.223 (0.196-0.250)	0.251 (0.218-0.285)	0.282 (0.239-0.325)	0.332 (0.273-0.391)	0.373 (0.299-0.448)
24-hr	0.060 (0.056-0.064)	0.073 (0.068-0.079)	0.087 (0.081-0.094)	0.099 (0.092-0.107)	0.115 (0.106-0.124)	0.127 (0.118-0.137)	0.140 (0.129-0.151)	0.153 (0.140-0.165)	0.170 (0.155-0.198)	0.189 (0.165-0.227)
2-day	0.036 (0.033-0.039)	0.044 (0.041-0.047)	0.052 (0.048-0.056)	0.059 (0.055-0.064)	0.068 (0.063-0.074)	0.075 (0.070-0.081)	0.083 (0.076-0.089)	0.090 (0.082-0.097)	0.099 (0.090-0.108)	0.107 (0.096-0.116)
3-day	0.026 (0.024-0.028)	0.032 (0.030-0.035)	0.038 (0.036-0.041)	0.044 (0.041-0.047)	0.051 (0.047-0.054)	0.056 (0.052-0.060)	0.062 (0.057-0.067)	0.067 (0.062-0.073)	0.075 (0.068-0.081)	0.081 (0.073-0.088)
4-day	0.022 (0.020-0.023)	0.026 (0.025-0.028)	0.032 (0.029-0.034)	0.036 (0.033-0.039)	0.042 (0.039-0.045)	0.046 (0.043-0.050)	0.051 (0.047-0.055)	0.056 (0.051-0.061)	0.063 (0.057-0.068)	0.068 (0.061-0.074)
7-day	0.015 (0.014-0.016)	0.018 (0.017-0.020)	0.022 (0.020-0.023)	0.025 (0.023-0.026)	0.029 (0.027-0.031)	0.032 (0.029-0.034)	0.035 (0.032-0.038)	0.038 (0.035-0.041)	0.042 (0.038-0.046)	0.045 (0.041-0.050)
10-day	0.012 (0.011-0.013)	0.015 (0.014-0.016)	0.017 (0.016-0.019)	0.020 (0.018-0.021)	0.022 (0.021-0.024)	0.025 (0.023-0.026)	0.027 (0.025-0.029)	0.029 (0.026-0.031)	0.031 (0.029-0.034)	0.033 (0.030-0.036)
20-day	0.008 (0.007-0.008)	0.010 (0.009-0.010)	0.011 (0.011-0.012)	0.013 (0.012-0.014)	0.014 (0.014-0.015)	0.016 (0.015-0.017)	0.017 (0.016-0.018)	0.018 (0.017-0.019)	0.019 (0.018-0.021)	0.020 (0.019-0.022)
30-day	0.006 (0.006-0.007)	0.008 (0.007-0.008)	0.009 (0.009-0.010)	0.010 (0.010-0.011)	0.012 (0.011-0.012)	0.013 (0.012-0.013)	0.014 (0.013-0.014)	0.014 (0.013-0.015)	0.015 (0.014-0.017)	0.016 (0.015-0.017)
45-day	0.005 (0.005-0.006)	0.007 (0.006-0.007)	0.008 (0.007-0.008)	0.009 (0.008-0.009)	0.010 (0.009-0.010)	0.011 (0.010-0.011)	0.011 (0.011-0.012)	0.012 (0.011-0.013)	0.013 (0.012-0.014)	0.014 (0.013-0.015)
60-day	0.005 (0.004-0.005)	0.006 (0.005-0.006)	0.007 (0.006-0.007)	0.008 (0.007-0.008)	0.009 (0.008-0.009)	0.009 (0.009-0.010)	0.010 (0.009-0.011)	0.011 (0.010-0.011)	0.011 (0.010-0.012)	0.012 (0.011-0.013)

[1] Precipitation frequency (PF) estimates in this table are based on frequency analysis of partial duration series (PDS).

Numbers in parenthesis are PF estimates at lower and upper bounds of the 90% confidence interval. The probability that precipitation frequency estimates (for a given duration and average recurrence interval) will be greater than the upper bound (or less than the lower bound) is 5%. Estimates at upper bounds are not checked against probable maximum precipitation (PMP) estimates and may be higher than currently valid PMP values.

Please refer to NOAA Atlas 14 document for more information.

Back to Top

PF graphical

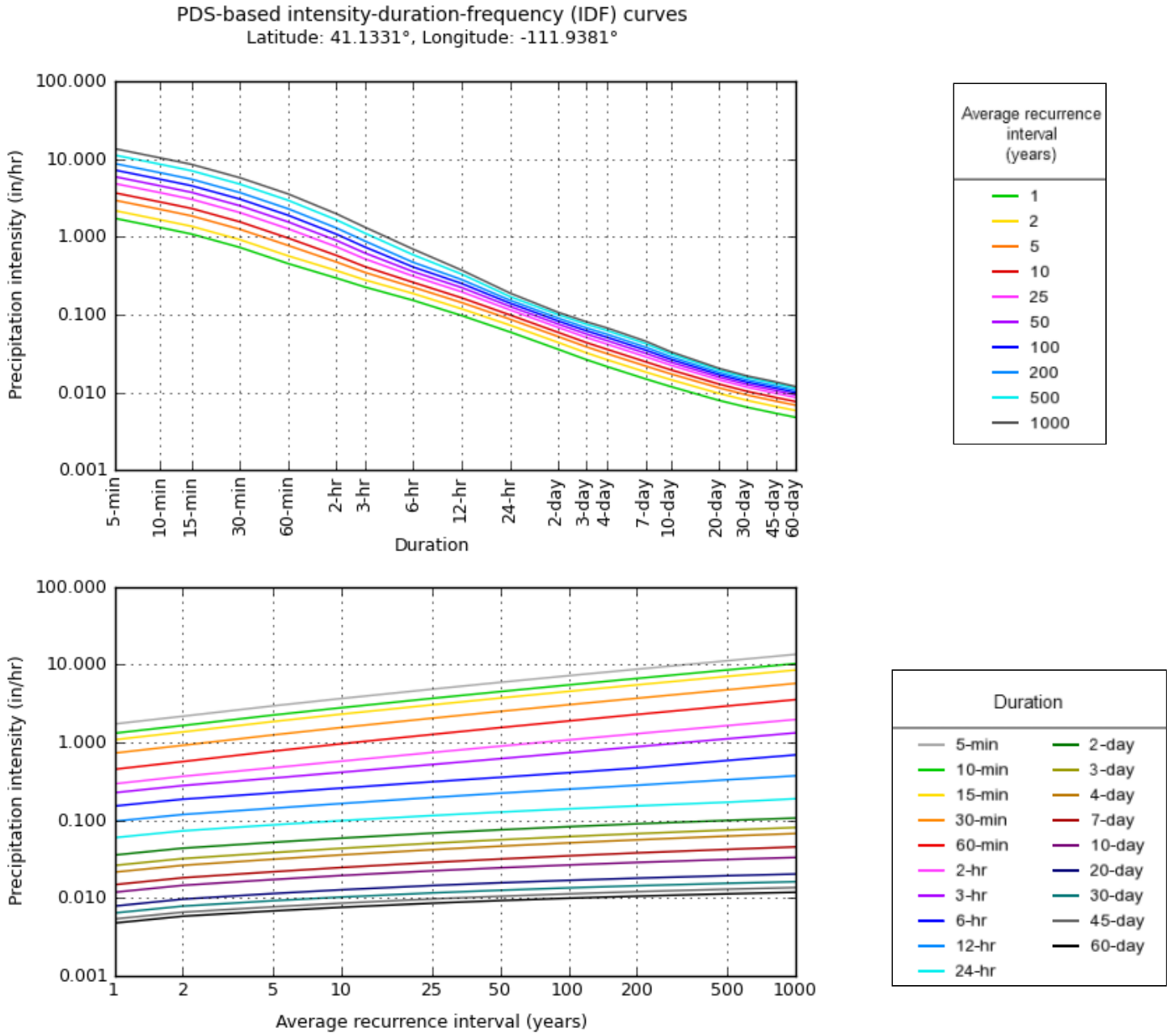

NOAA Atlas 14, Volume 1, Version 5

Created (GMT): Wed Nov 30 04:31:10 2022

Back to Top

Maps & aerials

Small scale terrain

EXHIBIT 2 – NOAA POINT PRECIPITATION FREQUENCY ESTIMATES - DEPTH

NOAA Atlas 14, Volume 1, Version 5
Location name: Ogden, Utah, USA*
Latitude: 41.1331°, Longitude: -111.9381°
Elevation: 4511.67 ft**
* source: ESRI Maps
** source: USGS

POINT PRECIPITATION FREQUENCY ESTIMATES

Sanja Perica, Sarah Dietz, Sarah Heim, Lillian Hiner, Kazungu Maitaria, Deborah Martin, Sandra Pavlovic, Ishani Roy, Carl Trypaluk, Dale Unruh, Fenglin Yan, Michael Yekta, Tan Zhao, Geoffrey Bonnin, Daniel Brewer, Li-Chuan Chen, Tye Parzybok, John Yarchoan

NOAA, National Weather Service, Silver Spring, Maryland

--- Depth ---

PF_tabular | PF_graphical | Maps_&_aerials

PF tabular

PDS-based point precipitation frequency estimates with 90% confidence intervals (in inches)[1]

Duration	Average recurrence interval (years)									
	1	2	5	10	25	50	100	200	500	1000
5-min	0.144 (0.125-0.168)	0.181 (0.158-0.212)	0.246 (0.213-0.288)	0.306 (0.263-0.359)	0.403 (0.338-0.476)	0.494 (0.402-0.590)	0.601 (0.473-0.725)	0.728 (0.552-0.897)	0.935 (0.670-1.19)	1.13 (0.770-1.47)
10-min	0.219 (0.189-0.256)	0.275 (0.241-0.323)	0.375 (0.324-0.439)	0.466 (0.400-0.546)	0.614 (0.514-0.725)	0.751 (0.611-0.897)	0.914 (0.719-1.10)	1.11 (0.840-1.37)	1.42 (1.02-1.81)	1.72 (1.17-2.24)
15-min	0.271 (0.234-0.317)	0.341 (0.298-0.401)	0.464 (0.402-0.544)	0.578 (0.496-0.677)	0.760 (0.638-0.899)	0.931 (0.758-1.11)	1.13 (0.891-1.37)	1.37 (1.04-1.69)	1.77 (1.26-2.24)	2.13 (1.45-2.77)
30-min	0.365 (0.316-0.427)	0.459 (0.401-0.540)	0.625 (0.542-0.732)	0.778 (0.667-0.912)	1.02 (0.859-1.21)	1.25 (1.02-1.50)	1.53 (1.20-1.84)	1.85 (1.40-2.28)	2.38 (1.70-3.02)	2.87 (1.96-3.73)
60-min	0.452 (0.391-0.529)	0.568 (0.496-0.668)	0.773 (0.670-0.906)	0.962 (0.826-1.13)	1.27 (1.06-1.50)	1.55 (1.26-1.85)	1.89 (1.49-2.28)	2.29 (1.74-2.82)	2.94 (2.11-3.73)	3.55 (2.42-4.62)
2-hr	0.588 (0.518-0.675)	0.734 (0.649-0.845)	0.947 (0.832-1.09)	1.15 (0.998-1.33)	1.49 (1.26-1.73)	1.79 (1.48-2.10)	2.16 (1.73-2.57)	2.59 (2.00-3.15)	3.29 (2.40-4.12)	3.94 (2.74-5.06)
3-hr	0.679 (0.609-0.768)	0.838 (0.751-0.951)	1.05 (0.930-1.19)	1.24 (1.10-1.41)	1.56 (1.35-1.79)	1.86 (1.57-2.15)	2.22 (1.83-2.61)	2.65 (2.12-3.17)	3.35 (2.55-4.16)	3.99 (2.92-5.11)
6-hr	0.912 (0.835-1.00)	1.12 (1.02-1.23)	1.34 (1.22-1.49)	1.55 (1.40-1.72)	1.87 (1.66-2.09)	2.13 (1.87-2.40)	2.45 (2.11-2.79)	2.81 (2.36-3.25)	3.51 (2.86-4.20)	4.14 (3.28-5.16)
12-hr	1.17 (1.07-1.29)	1.43 (1.31-1.57)	1.72 (1.56-1.90)	1.98 (1.79-2.18)	2.36 (2.11-2.63)	2.68 (2.37-3.01)	3.03 (2.62-3.44)	3.40 (2.88-3.91)	4.00 (3.29-4.71)	4.49 (3.60-5.40)
24-hr	1.43 (1.33-1.54)	1.75 (1.63-1.90)	2.09 (1.95-2.26)	2.37 (2.21-2.56)	2.76 (2.55-2.97)	3.06 (2.82-3.29)	3.36 (3.09-3.62)	3.67 (3.36-3.96)	4.09 (3.71-4.76)	4.54 (3.97-5.46)
2-day	1.72 (1.60-1.85)	2.10 (1.95-2.27)	2.50 (2.33-2.70)	2.83 (2.63-3.05)	3.28 (3.04-3.53)	3.62 (3.34-3.91)	3.97 (3.64-4.29)	4.32 (3.94-4.67)	4.78 (4.32-5.19)	5.12 (4.61-5.59)
3-day	1.89 (1.76-2.04)	2.32 (2.16-2.50)	2.77 (2.58-2.98)	3.14 (2.92-3.38)	3.65 (3.38-3.92)	4.04 (3.73-4.35)	4.44 (4.08-4.79)	4.85 (4.43-5.24)	5.39 (4.88-5.85)	5.80 (5.22-6.32)
4-day	2.07 (1.92-2.22)	2.53 (2.36-2.72)	3.03 (2.83-3.25)	3.44 (3.21-3.70)	4.02 (3.73-4.31)	4.46 (4.13-4.79)	4.92 (4.52-5.29)	5.38 (4.92-5.81)	6.01 (5.45-6.51)	6.49 (5.83-7.06)
7-day	2.50 (2.33-2.68)	3.06 (2.86-3.29)	3.66 (3.41-3.92)	4.15 (3.87-4.45)	4.82 (4.48-5.17)	5.34 (4.94-5.73)	5.87 (5.40-6.30)	6.39 (5.86-6.90)	7.10 (6.45-7.71)	7.64 (6.89-8.34)
10-day	2.85 (2.66-3.05)	3.50 (3.26-3.75)	4.15 (3.88-4.44)	4.68 (4.37-5.00)	5.37 (5.00-5.74)	5.88 (5.46-6.29)	6.39 (5.91-6.85)	6.89 (6.35-7.40)	7.52 (6.89-8.12)	7.99 (7.28-8.66)
20-day	3.79 (3.53-4.05)	4.65 (4.34-4.99)	5.49 (5.13-5.88)	6.13 (5.73-6.57)	6.95 (6.49-7.43)	7.54 (7.03-8.06)	8.11 (7.54-8.68)	8.65 (8.02-9.27)	9.31 (8.60-10.0)	9.78 (9.00-10.5)
30-day	4.63 (4.33-4.95)	5.68 (5.31-6.07)	6.66 (6.23-7.12)	7.42 (6.93-7.92)	8.39 (7.82-8.96)	9.08 (8.45-9.70)	9.75 (9.04-10.4)	10.4 (9.60-11.1)	11.1 (10.3-12.0)	11.7 (10.7-12.6)
45-day	5.82 (5.43-6.24)	7.11 (6.63-7.64)	8.33 (7.78-8.94)	9.29 (8.66-9.95)	10.5 (9.79-11.2)	11.4 (10.6-12.2)	12.2 (11.4-13.1)	13.0 (12.1-14.0)	14.0 (12.9-15.1)	14.7 (13.5-15.9)
60-day	6.88 (6.42-7.35)	8.41 (7.85-9.02)	9.85 (9.21-10.5)	11.0 (10.2-11.7)	12.4 (11.5-13.2)	13.4 (12.5-14.3)	14.3 (13.3-15.4)	15.2 (14.1-16.3)	16.3 (15.1-17.6)	17.1 (15.7-18.4)

[1] Precipitation frequency (PF) estimates in this table are based on frequency analysis of partial duration series (PDS).

Numbers in parenthesis are PF estimates at lower and upper bounds of the 90% confidence interval. The probability that precipitation frequency estimates (for a given duration and average recurrence interval) will be greater than the upper bound (or less than the lower bound) is 5%. Estimates at upper bounds are not checked against probable maximum precipitation (PMP) estimates and may be higher than currently valid PMP values.

Please refer to NOAA Atlas 14 document for more information.

Back to Top

PF graphical

PDS-based depth-duration-frequency (DDF) curves
Latitude: 41.1331°, Longitude: -111.9381°

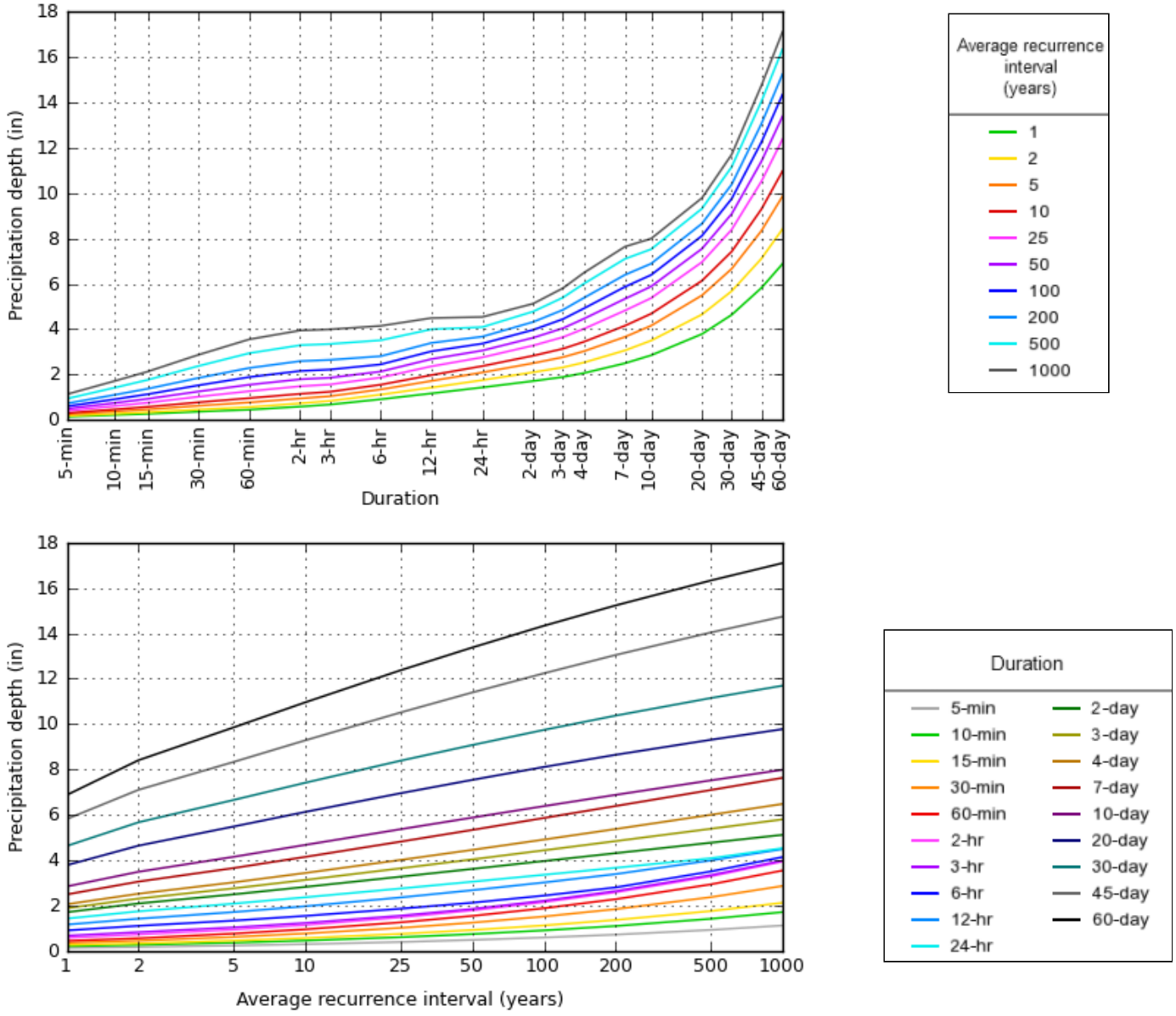

NOAA Atlas 14, Volume 1, Version 5

Created (GMT): Wed Nov 30 04:25:06 2022

Back to Top

Maps & aerials

Small scale terrain

EXHIBIT 3 – SUMMARY OF ALLOWABLE LID BMPs

Summary of LID BMPs and Recommendations on Where to Allow
from *A Guide to Low Impact Development within Utah*

https://deq.utah.gov/water-quality/low-impact-development

				Primary Functions				Where Permitted				
LID BMP Category	LID BMP Type	Fact Sheet ID	Removal Effectiveness[1]	Bioretention	Volume Retention	Biofiltration	Maintenance Effort	Residential - Public Roads	Residential - Private Roads	Residential - Multi-family	Commercial	Industrial
Bioretention	Rain Garden	BR-1	high	yes	yes	yes	low-med	no	yes	yes	yes	yes
	Bioretention Cell	BR-2	high	yes	yes	yes	low-med	yes	yes	yes	yes	yes
	Bioswale	BR-3	medium	yes	some	yes	low	yes	yes	yes	yes	yes
	Vegetated Strip	BR-4	med-high	yes	some	yes	low	yes	yes	yes	yes	yes
	Tree Box Filter	BR-5	med-high	yes	varies	yes	medium	no	yes	yes	yes	yes
	Green Roof	BR-6	med-high	yes	yes	yes	med-high	no[2]	no[2]	no[2]	yes	yes
Pervious Surfaces	Pervious Surfaces	PS-1	high	yes	yes	some	low-med	no[2]	no[2]	yes	yes	yes
Infiltration Devices[5]	Infiltration Basin[3]	ID-1	high	yes	yes	yes	low	yes	yes	yes	yes	yes
	Infiltration Trench	ID-2	high	yes	yes	some	low	yes	yes	yes	yes	no
	Dry Well[3,4]	ID-3	high	yes	yes	no	low-med	no	yes	yes	yes	no
	Underground Infiltration Gallery[3,4]	ID-4	high	yes	yes	no	low-med	no	yes	yes	yes	yes
Harvest and Reuse	Harvest and Reuse[6]	HR-1	varies	varies	yes	varies	low	no[2]	no[2]	no[2]	yes	yes

Notes

[1] Sediment, Nutrients, Metals, Bacteria, Oil/Grease

[2] Individual homes may utilitize BMP, but it will not count towards LID and retention requirement for development.

[3] Requires pre-treatment

[4] Requires UIC Class V injection well permit from State of Utah

[5] Other factors (e.g. drinking water source protection zone, contaminated groundwater, etc.) may limit use.

[6] Requires registration with DWRi

APPENDIX B – GEOTECHNICAL INVESTIGATION REPORT MINIMUM REQUIREMENTS

APPENDIX B

GEOTECHNICAL INVESTIGATION REPORT MINIMUM REQUIREMENTS

B1. General Provisions

A. All reports shall include the Minimum Testing Requirements and use the Design Parameters as detailed below.

B. All reports shall be signed and sealed by a registered Professional Engineer licensed in Utah.

B2. Report Contents

A. Geotechnical Investigation Report submitted to South Weber City shall generally include the following contents, as applicable.

CONTENTS

1.0 Project Description/Overview
- *1.1 Existing Conditions*
- *1.2 Proposed Improvements*

2.0 Site Conditions
- *2.1 Surface Conditions*
- *2.2 Subsurface Conditions*
- *2.3 Groundwater*

3.0 Subsurface Investigation
- *3.1 Percolation Test*
- *3.2 Infiltration Test*

4.0 Laboratory Testing

5.0 Geologic Hazards
- *5.1 Rock Fall*
- *5.2 Faulting*
- *5.3 Seismic/Ground Motions*
- *5.4 Lateral Spread*
- *5.5 Liquefaction Potential*
- *5.6 Landslide and Scarps*
- *5.7 Debris Flow/Alluvial Fan*
- *5.8 Expansive/Collapsible Soils*
- *5.9 Avalanche*

6.0 Earthwork
- *6.1 Site Preparation and Grading*
- *6.2 Temporary Excavations*
- *6.3 Permanent Cut and Fill Slopes*
- *6.4 Fill Material Composition, Placement, and Compaction*
- *6.5 Roadway and Embankments Fill*
- *6.6 Structural Fill*

6.7 Utility Trenches
6.8 Re-use of Excavated Soil Materials
7.0 Foundations
7.1 Foundation Recommendations
7.2 Installation Requirements
7.3 Estimated Settlement
7.4 Lateral Resistance
8.0 Static and Seismic Lateral Earth Pressures (Active, Moderately Yielding, At-Rest, and Passive Conditions)
9.0 Floor Slabs
10.0 Drainage Recommendations
10.1 Surface
10.2 Subsurface
10.3 Foundation Drains/Subdrains
11.0 Pavement Section
11.1 (See Section B4)
11.2 Exterior Concrete Flatwork
12.0 Retaining Walls (Required for all retaining walls taller than 4 feet, when used)
12.1 Surface and Subsurface Drainage
12.2 Internal and Global Stability (Static and Seismic Loading)
12.3 Dimensions and Elevations
12.4 Settlements
12.5 Construction Inspection
13.0 Slope Stability (Required for slopes greater than 25%)
14.0 References
Tables
Figures
A. Project Location/Site Map
B. Boring/Test Pit Locations
C. Boring/Test Pit Logs
D. Key to Symbols for Boring/Test Pit Logs
Appendices, as needed

B3. Minimum Testing Requirements

A. Borings (B) and Test Pits (TP), either known as a "hole"
1. Total: Minimum 1 hole per 2 acres, rounded up
   a. Example: 5.5 acre site: 5.5÷2 = 2.75, round up to 3 holes
2. Roadway: 1 hole + 1 hole per 500 lf of roadway (rounded up, along centerline alignment) (counts towards Total)
   a. Example: 10.5 acre subdivision with 1,850 lf of roadway centerline
      i. Roadway: 1 + (1,850÷500) = 4.7, round up to 5 holes
      ii. Total, minimum: 10.5÷2 = 5.25, round up to 6 holes

iii. Therefore, 6 total holes are required for subdivision, with 5 of the holes being along the roadway alignment.

3. Commercial sites: 1 hole + 1 hole per 5,000 square feet (rounded up) for buildings
   a. Example: 13,500 sf building: 1 + (13,500÷5,000) = 3.7, round up to 4 holes
4. Additional borings or test pits as may be required for a representative sampling of the site, as determined by the geotechnical engineer.

B4. Minimum Design Parameters for Pavement

A. Local/Residential
   1. 75,000 ESALS per year
   2. 20-yr design life
   3. 3% growth factor
B. Cul-de-Sac
   1. 50,000 ESALS per year
   2. 20-yr design life
   3. 3% growth factor
C. Minor Collector
   1. 300,000 ESALS per year
   2. 20-yr design life
   3. 3% growth factor
D. Major Collector / Minor Arterial
   1. Contact City for traffic requirements

APPENDIX C - MODIFICATIONS AND ADDITIONS TO MANUAL OF STANDARD SPECIFICATIONS

APPENDIX C

MODIFICATIONS AND ADDITIONS TO THE 2017 MANUAL OF STANDARD SPECIFICATIONS

as published by:
Utah LTAP Center
Utah State University
Logan Utah
2017

TABLE OF CONTENTS

Section		Page No.
	DIVISION 03 CONCRETE	
03 20 00 M	CONCRETE REINFORCING (Modified)	1
03 30 04 M	CONCRETE (Modified)	2
03 30 10 M	CONCRETE PLACEMENT (Modified)	3
	DIVISION 31 EARTHWORK	
31 23 16 M	EXCAVATION (Modified)	4
31 23 20	FILL	5
31 41 00 M	SHORING (Modified)	8
	DIVISION 32 EXTERIOR IMPROVEMENTS	
32 01 06	STREET NAME SIGNS	10
32 01 13.64 M	CHIP SEAL (Modified)	11
32 12 05 M	BITUMINOUS CONCRETE (Modified)	13
32 16 13 M	DRIVEWAY, SIDEWALK, CURB, GUTTER (Modified)	14
32 31 13 M	CHAIN LINK FENCES AND GATES (Modified)	15
32 31 16 M	WELDED WIRE FENCES AND GATES (Modified)	16
32 31 23	POLY(VINYL CHLORIDE)(PVC) FENCES AND GATES	17
32 92 00 M	TURF AND GRASS (Modified)	22
	DIVISION 33 UTILITIES	
33 05 25 M	PAVEMENT RESTORATION (Modified)	23
33 08 00 M	COMMISSIONING OF WATER UTILITIES (Modified)	24
33 11 00 M	WATER DISTRIBUTION AND TRANSMISSION (Modified)	26
33 12 16 M	WATER VALVES (Modified)	30
33 12 19 M	HYDRANTS (Modified)	32
33 12 33 M	WATER METER (Modified)	32
33 13 00 M	DISINFECTION (Modified)	35

SECTION 03 20 00 M
CONCRETE REINFORCING (MODIFIED)

PART 3 EXECUTION

3.1 PLACING

Add paragraphs F and G as follows:

F. No steel shall extend from or be visible on any finished surface

G. All steel shall have a minimum of 1.5-inches of concrete cover.

SECTION 03 30 04 M
CONCRETE (Modified)

PART 2 PRODUCTS

2.4 Add paragraph F as follows:

F. Fiber Reinforcement: A minimum of 1.0 pounds per cubic yard of polyolefin fiber reinforcement shall be evenly distributed into the mix. Mixing shall be as recommended by the manufacturer/supplier such that the fibers do not ball up. Polyolefin fibers shall meet the requirements of ASTM C1116 and ASTM D7508.

2.5 **MIX DESIGN**

Replace Paragraph A with the following:

A. **Class:** When not specified in the plans or project specifications, use the following table to select the class of concrete required for the application:

Class	Application
5,000	Reinforced Structural Concrete
4,000	Sidewalks, curb, gutter, cross gutters, waterways, pavements, and unreinforced footings and foundations
3,000	Thrust blocks
2,000	Anchors, mass concrete

SECTION 03 30 10 M
CONCRETE PLACEMENT (Modified)

PART 3 EXECUTION

3.2 PREPARATION

Add paragraph F as follows:

F. No concrete shall be placed until the surfaces have been inspected and approved by the City Engineer or City Inspector.

SECTION 31 23 16 M
EXCAVATION (Modified)

PART 3 EXECUTION

3.3 GENERAL EXCAVATION REQUIREMENT

Add paragraph I as follows:

I. Excavation for pipelines under existing curb and gutter, concrete slabs, or sidewalks shall be open cut. Neither tunneling nor water jetting is allowed. At the option of the City Engineer, jacking or boring under permanent facilities may be allowed based on his/her direction.

Add Section 31 23 20 Fill

SECTION 31 23 20
FILL

PART 1 GENERAL

1.1 **SECTION INCLUDES**

A. Non-structural fill materials.

B. Non-structural placement and compaction.

1.2 **REFERENCEs**

A. **ASTM Standards**

D 698 Laboratory Compaction Characteristics of Soil Using Standard Effort (12,400 ft-lbf/ft^3 (600 kN-m/m^3)).

D 1557 Standard Test Methods for Laboratory Compaction Characteristics of Soil Using Modified Effort (56,000 ft-lbf/ft^3 (2,700 kN-m/m^3)).

D 2922 Density of Soil and Soil-Aggregate in Place by Nuclear Methods (Shallow Depth).

1.3 **SUBMITTALS**

A. When requested by ENGINEER, submit laboratory dry density and optimum laboratory moisture content for each type of fill to be used.

1.4 **QUALITY ASSURANCE**

A. Do not change material sources without ENGINEER's knowledge.

B. Reject material that does not comply with the requirements specified in this Section.

1.5 **STORAGE**

A. Safely stockpile materials.

B. Separate differing fill materials, prevent mixing, and maintain optimum moisture content of materials.

1.6 **SITE CONDITIONS**

A. Do not place, spread, or roll any fill material over material that is damaged by water. Remove and replace damaged material at no additional cost to OWNER.

B. Control erosion. Keep area free of trash and debris. Repair settled, eroded, and rutted areas.

C. Reshape and compact damaged structural section to required density.

1.7 **ACCEPTANCE**

A. General: Native material may be wasted if there is no additional cost to substitute material acceptable to ENGINEER.

B. Lift thickness: One test per Lot.

C. Compaction: One test per Lot. Verify density using nuclear tests, ASTM D 2922. Compaction and Lot sizes as follows:

1. Compact to 92% Standard Proctor
2. One Lot = 1500 square feet per lift

1.8 **WARRANTY**

A. Repair settlement damage at no additional cost to OWNER.

PART 2 PRODUCTS

2.1 **FILL MATERIALS**

A. Material shall be free from sod, grass, trash, rocks larger than four (4) inches in diameter, and all other material unsuitable for construction of compacted fills.

2.2 **WATER**

A. Make arrangements for sources of water during construction and make arrangements for delivery of water to site.

B. Comply with local Laws and Regulations at no additional cost to OWNER when securing water from water utility company.

PART 3 EXECUTION

3.1 **PREPARATION**

A. Implement the traffic control plan requirements, Section 01 55 26.

B. Verify material meets maximum size requirements.

C. If ground water is in the intended fill zone, dewater.

3.2 **PROTECTION**

A. Protect existing trees, shrubs, lawns, structures, fences, roads, sidewalks, paving, curb and gutter and other features.

B. Protect above or below grade utilities. Contact utility companies to repair utility damage. Pay all cost of repairs.

C. Avoid displacement of and damage to existing installations while compacting or operating equipment.

D. Do not use compaction equipment adjacent to walls or retaining walls that may cause wall to become over-stressed or moved from alignment.

E. Restore any damaged structure to its original strength and condition.

3.3 **LAYOUT**

A. Identify required line, levels, contours, and datum.

B. Stake and flag locations of underground utilities.

C. Upon discovery of unknown utility or concealed conditions, notify ENGINEER.

D. Maintain all benchmarks, control monuments and stakes, whether newly established by surveyor or previously existing. Protect from damage and dislocation.

E. If discrepancy is found between Contract Documents and site, ENGINEER shall make such minor adjustments in the Work as necessary to accomplish the intent of Contract Documents without increasing the Cost of the Work to CONTRACTOR or OWNER.

3.4 **SUBGRADE**

A. Protect Subgrade from desiccation, flooding, and freezing.

B. Before placing fill over Subgrade, get ENGINEER's inspection of subgrade surface preparations.

C. If Subgrade is not readily compactable get ENGINEER’s permission to stabilize the subgrade.

3.5 **TOLERANCES**

A. Compaction: Ninety-two (92) percent minimum relative to a standard proctor density, Section 31 23 26.

B. Lift Thickness (before compaction):

1. Eight (8) inches when using riding compaction equipment.

2. Six (6) inches when using hand held compaction equipment.

3.6 **CLEANING**

A. Remove stockpiles from site. Grade site surface to prevent free standing surface water.

B. Leave borrow areas clean and neat.

END OF SECTION

SECTION 31 41 00 M
SHORING (Modified)

PART 1 GENERAL

1.2 PRICE – MEASUREMENT AND PAYMENT

A. In Trenching, Shoring:

Revise subparagraph 1 to read as follows:

1. A two (2) part Protective System is required if each Side of the Trench is to be shored. The use of a Trench Box shall be classified as one Protective System.

1.4 DESIGN OF PROTECTIVE SYSTEMS

Add paragraphs C and D as follows:

C. Trenches five (5) feet deep or greater require a protective system unless the excavation is made entirely in stable rock. If less than five (5) feet deep, a competent person may determine that a protective system is not required.

D. Trenches 20 feet deep or greater require that the protective system be designed by a registered professional engineer or be based on tabulated data prepared and/or approved by a registered professional engineer in accordance with 1926.652(b) and (c).

1.5 SUBMITTALS

Revise paragraph A to read as follows:

A. Submit a Protective System plan:

1. When excavation is over twenty (20) feet deep, or
2. When requested by ENGINEER.

Add Article 1.6 as follows:

1.6 REFERENCES

A. 29 CFR Part 1910 – Occupational Safety and Health Standards

B. 29 CFR Part 1926 Subpart P – Excavations

PART 3 EXECUTION

3.4 INSPECTIONS

Add paragraph C as follows:

C. OWNER and/or ENGINEER may order an immediate work stoppage if working conditions are thought to be unsafe. Work may resume only after proper safety precautions are implemented.

SECTION 32 01 06 M
STREET NAME SIGNS (Modified)

PART 1 GENERAL

1.2 REFERENCES

Add paragraph C as follows:

C. **South Weber City Public Works Standard Drawings**

SECTION 32 01 13.64 M
CHIP SEAL (Modified)

PART 1 GENERAL

1.2 REFERENCES

A. **ASTM Standards:**

Add the following to paragraph A:

C 29 Standard Test Method for Bulk Density ("Unit Weight") and Voids in Aggregate

C 330 Standard Specification for Lightweight Aggregates for Structural Concrete

Rename Article 1.5 as follows:

1.5 WEATHER AND CONDITIONS

D. Temperature

Add subparagraph 4 as follows:

4. Do not place if forecasted temperature is expected to drop below 40 deg F within 72 hours of placement.

B. Moisture and Wind:

Add subparagraph 1 as follows:

1. Do not place chip seal coat if surface moisture is present.

PART 2 PRODUCTS

2.1 ASPHALT BINDER

Revise paragraph B as follows:

A. Emulsified Asphalt: CRS-2P or LMCRS, Section 32 12 03. Use any of the following additives to match aggregate particle charge, weather conditions, and mix design:

(Subparagraphs 1-5 remain unchanged.)

2.2 COVER AGGREGATE

A. Material:

Revise subparagraph 2 to read as follows:

2. 100% Crusher processed rotary kiln lightweight expanded shale chips (Utelite or approved equal).

Replace Table 1 with the following:

Table 1 – Physical Properties of Lightweight Aggregate (ASTM C330)			
Property	**ASTM**	**Min.**	**Max.**
Clay Lumps and Friable Particles, percent	C142	-	2
Bulk Density Dry Loose Condition, lb/ft^3	C29	-	55

B. Gradation: Analyzed on a dry weight and percent passing basis.

Replace Table 2 with the following:

Table 2 – Master Grading Band for Lightweight Aggregate		
Sieve	**ASTM**	**C330 Requirement**
1/2”	C136	100
3/8”		80-100
No. 4		5-40
No. 8		0-20
No 16		0-10
No. 200		0-10

Replace Article 2.3 with the following:

2.3 **FOG SEAL/FLUSH COAT**

A. Material: Use cationic emulsified asphalt grade CSS-1h, Section 32 12 03.

Add Article 2.4 as follows:

2.4 **MIX DESIGN**

A. Select Type and grade of emulsified asphalt, ASTM D 3628.

B. Use the following application rates, or submit mix design for approval by Engineer.

1. Emulsion: Use Table 3.

Table 3 – Emulsion Application Rate	
Emulsion	Application Rate (gal/sy)
CRS-2P	0.32 – 0.35
LMCRS-2	0.32 – 0.35

2. Cover Material: Use Table 4.

Table 4 – Cover Material Application Rate	
Emulsion	Application Rate (lbs/sy)
CRS-2P	10.0 – 12.0
LMCRS-2	10.0 – 12.0

3. Fog Seal/Flush Coat: Use 0.10 – 0.12 gal/sy at a 2:1 dilution rate.

PART 3 EXECUTION

3.2 PREPARATION

Add paragraph F as follows:

F. Cover manholes, valves boxes, storm drain inlets, and other service utility features before placing any chip seal coat.

3.4 APPLICATION

Revise paragraph A to read as follows:

A. Asphalt Emulsion: Keep viscosity between 50 and 100 centistokes during application, ASTM D 2170. Keep temperature to a minimum of 145 deg F.

Revise Article 3.6 to read as follows:

3.6 FOG SEAL/FLUSH COAT

A. Apply asphalt seal over the chips within 24 hours of placing chips.

B. Keep viscosity between 50 and 100 centistokes, during application, ASTM D 2170.

SECTION 32 12 05 M
BITUMINOUS CONCRETE (MODIFIED)
(Amendment 2 of the 2017 Edition APWA Specifications)

PART 1 GENERAL

1.4 SUBMITTALS

Revise paragraph C as follows:

Replace item 11 with the following:

11. Tensile Strength Ratio or Hamburg Rut Test results.

Add the following item:

14. Unless otherwise specified, Road Class II shall be used for the selection of Mix Design parameters.

SECTION 32 16 13 M
DRIVEWAY, SIDEWALK, CURB, GUTTER (Modified)

PART 3 EXECUTION

3.4 **CONTRACTION JOINTS**

D. Curb, Gutter, Waterway:

Revise subparagraph 1 to read as follows:

1. Place joints at intervals not exceeding 10 feet.

3.5 **EXPANSION JOINTS**

B. Sidewalks:

Add subparagraph 5 as follows:

5. Expansion joints are to be placed at 48-foot intervals (minimum) or wherever new sidewalk adjoins existing sidewalks, driveways, or aprons.

C. Curb, Gutter, Waterway:

Add subparagraph 4 as follows:

4. Place expansion joint where new curb and gutter adjoins existing curb and gutter.

SECTION 32 31 13 M
CHAIN LINK FENCES AND GATES (Modified)

PART 2 PRODUCTS

2.6 POSTS, CAPS, RAILS, COUPLINGS

A. Posts, Frames, Stiffeners, Rails: ASTM F 1043:

Revise applicable rows of Table 1 to read as follows:

Top Rail	1-5/8” pipe

PART 3 EXECUTION

3.6 INSTALLATION OF FENCE FABRIC

Revise paragraph A to read as follows:

A. Place fence fabric on roadway side of posts unless otherwise specified. Place fabric approximately 1 inch above the grounds. Maintain a straight grade between posts by excavating ground high points and filling depressions with soil.

SECTION 32 31 16 M
WELDED WIRE FENCES AND GATES (Modified)

PART 1 GENERAL

1.2 REFERNCES

Add paragraph D as follows:

D. UDOT Standard Drawing

FG 2A Right of Way Fence and Gates (Metal Post)

FG 2B Right of Way Fence and Gates (Metal Post)

PART 3 EXECUTION

3.2 INSTALLATION

Add paragraph N as follows:

N. Install per UDOT Standard Drawings FG 2A and FG 2B.

Add Section 32 31 23 Poly(Vinyl Chloride)(PVC) Fences and Gates

SECTION 32 31 23
POLY(VINYL CHLORIDE)(PVC) FENCES AND GATES

PART 1 GENERAL

1.1 SECTION INCLUDES

A. PVC fencing, posts, gates, and appurtenances.

1.2 REFERNCES

A. **ASTM Standards:**

D 1784	Rigid Poly(Vinyl Chloride) (PVC) Compounds and Chlorinated Poly(Vinyl Chloride) (CPVC) Compounds
F 626	Fence Fittings
F 964	Rigid Poly(Vinyl Chloride)(PVC) Exterior Profiles Used for Fencing and Railing
F 1999	Installation of Rigid Poly(Vinyl Chloride)(PVC) Fence Systems

1.3 SUBMITTALS

A. Drawings: Indicate plan layout, grid, size and spacing of components, accessories, fittings, anchorage, and post section.

B. Data: Submit manufacturer's installation instructions and procedures, including details of fence and gate installation.

C. Submit sample of fence fabric and typical accessories.

PART 2 PRODUCTS

2.1 GENERAL

A. Products from other qualified manufacturers having a minimum of 5 years' experience manufacturing PVC fencing will be acceptable by the architect as equal, if approved in writing, ten days prior to bidding, and if they meet the following specifications for design, size, and fabrication. PVC Profiles, lineals, and extrusions used as components must "meet or exceed" the minimum performance guidelines laid out in ASTM 964.

2.2 PVC FENCE

A. Pickets, rails, and posts fabricated from PVC extrusion. The PVC extrusions shall comply with ASTM D 1784, Class 14344B and have the following characteristics:

Specific Gravity (+/- 0.02)	1.4
Using 0.125 specimen Izod impact ft. lbs./in. notch	23.0
Tensile strength, PSI	6,910
Tensile modulus, PSI	336,000
Flexural yield strength, PSI	10,104
Flexural modulus, PSI	385,000
DTUL at 264 PSI	67˚C

B. All fence parts made from PVC shall have a minimum thickness of 0.17 in except where specified otherwise.

2.3 **POST CAPS**

A. Molded, one piece.

B. Cross Section: Match post or gate upright cross section.

C. Thickness: 0.095" minimum.

D. Configuration: Flat or four-sided as required for installation to top of posts and gate.

2.4 **ACCESSORIES**

A. Standard gate brace, screw caps, rail end reinforcers, and other accessories as required.

2.5 **MISCELLANEOUS MATERIALS**

A. Stiffener Chemicals: Galvanized steel structural channel. Configure channels for concealed installation within PVC rails with pre-drilled holes for drainage. Aluminum extruded channel available upon request.

1. Cross Section: 3.00" x 3.00" x 1.500" hourglass shape to grip picket.

2. Thickness: 0.040 Gauge (minimum)

B. Fasteners and Anchorage: Stainless Steel. All fasteners to be concealed or colored heads to match. Provide sizes as recommended by fence manufacturer.

C. PVC Cement: As recommended by fence manufacturer.

2.6 **GATE HARDWARE AND ACCESSORIES**

A. General: Provide hardware and accessories for each gate according to the following requirements.

B. Hinges: Size and material to suit gate size, non-lift-off type, self-closing, glass filled nylon with stainless steel adjuster plate, offset to permit 120 degree gate opening. Provide one pair of hinges for each gate.

1. Stainless Steel, painted with carbo zinc base.

2. Finish: Pre-painted, 2 coats "Polane."

3. Color: Black Gravity Latch or dual access gravity latch.

C. Latch: Manufacturers’ standard self-latching, thumb latch, pre-finished steel, or stainless steel gravity latch. Provide one latch per gate.

1. Finish: Match gate hinge finish.

D. Hardware: Stainless Steel. Provide sizes as recommended by fence manufacturer.

1. Finish: Match gate hinge finish.

2.7 **CONCRETE**

A. Use Class 3000 concrete. Section 03 30 04.

2.8 **REINFORCING FOR FILLED POSTS**

A. Steel Reinforcing:

1. Steel Reinforcing Bars: ASTM A 615. Grade 60. Deformed (#4 or ½").
2. Install 2 bars for each corner or gate post as specified in the drawings.

PART 3 EXECUTION

3.1 **PREPARATION**

A. Locate and preserve utilities, Section 31 23 16.

B. Excavation, Section 31 23 16.

C. Review to ASTM F 567 and CLFMI products manual for chain link fence installation.

D. Protect roots and branches of trees and plants to remain.

E. Limit amount of clearing and grading along fence line to permit proper installation.

3.2 **LAYOUT OF WORK**

A. Accurately locate and stake locations and points necessary for installation of fence and gates.

B. General arrangements and location of fence and gates are indicated. Install except for minor changes required by unforeseen conflicts with work of other trades.

3.3 **INSTALLATION – GENERAL**

A. Install fence in compliance with manufacturer's written instructions.

B. PVC components shall be carefully handled and stored to avoid contact with abrasive surfaces.

C. Install components in sequence as recommended by fence manufacturer.

D. Install fencing as indicated on the drawings provided.

E. Variations from the installation indicated must be approved.

F. Variations from the fence and gate installation indicated and all costs for removal and replacement will be the responsibility of the CONTRACTOR.

3.4 **INSTALLATION OF POSTS**

A. Excavation

1. Drill or hand-excavate (using post hole digger) holes for posts to diameters and spacings indicated, in firm, undisturbed or compacted soil.

2. If not indicated on drawings, excavate holes for each post to a minimum diameter of 12 inches.
3. Unless otherwise indicated, excavate hole depths not less than 30 inches or to frost line.

B. Posts

1. Install posts in one piece, plumb and in line. Space as noted in the drawings. Enlarge excavation as required to provide clearance indicated between post and side of excavation.
2. Protect portion of posts above ground from concrete splatter. Place concrete around posts and vibrate or tamp for consolidation. Check each post for vertical and top alignment and hold in position during placement and finishing operations.
   a. Unless otherwise indicated, terminate top of concrete footings 3 inches below adjacent grade and trowel to a crown to shed water.
   b. Secure posts in position for manufacturer's recommendations until concrete sets.
   c. After installation of rails and unless otherwise indicated, install reinforcing in posts in opposing corners of post as shown and fill end and gate posts with concrete to level as indicated. Concrete fill shall completely cover the reinforcing steel and gate hardware fasteners. Consolidate the concrete by striking the post face with a rubber mallet, carefully tamping around the exposed post bottom.
   d. Install post caps. Use #8 screws, nylon washers and snap caps.
   e. Remove concrete splatters from PVC fence materials with care to avoid scratching.

3.5 INSTALLATION OF RAILS

A. Top and Bottom Rails

1. Install rails in one piece into routed hole fabricated into posts to receive top and bottom rails, and middle where necessary. Except at sloping terrain, install rails level.
   a. Prior to installation of rails into posts, insert concealed steel channel stiffeners in top rail, where necessary. Bottom rails shall include minimum 2-¼" drainage holes.
   b. At posts to receive concrete fill, tape rail ends to prevent seepage when filling post with concrete.

B. Middle Rails:

1. Where necessary, install middle rails in one piece into routed hole in posts with larger holes facing down. Except at sloping terrain, install middle rails level. Secure mid rail to pickets with 2-#8 x 1-1/2" screws evenly spaced.
   a. At posts to receive concrete fill, tape rail ends to prevent seepage when filling post with concrete.

3.6 INSTALLATION OF FENCE FABRIC/PICKETS

A. Pickets: Install pickets in one piece as per manufacturer recommendations. Install pickets plumb.

3.7 INSTALLATION ON SLOPING TERRAIN

A. At sloping terrain rails may be racked (sloped) or stepped to comply with manufacturer's recommendations.

3.8 INSTALLATION OF GATES

A. Prior to installation of rails into posts, apply PVC cement into sockets per manufacturer's recommendations. Bottom rail shall include minimum 2-¼" drainage holes.

B. Assemble gate prior to fence installation to accurately locate hinge and latch post. Align gate horizontal rails with fence horizontal rails.

C. Install gates plumb, level, and secure for full opening without interference according to manufacturer's instructions.

D. Gate Latch Installation. Install gate latch according to manufacturer's instructions.

E. Allow minimum 72 hours to let concrete set-up before opening gates.

END OF SECTION

SECTION 32 92 00 M
TURF AND GRASS (Modified)

PART 1 GENERAL

1.3 SUBMITTALS

Add paragraph C as follows:

C. Submit seed mix if proposing alternate see mix show in paragraph 2.1.0 below.

PART 2 PRODUCTS

2.1 SEED

Add paragraph D as follows:

D. Seed Mix:

SEED #	BOTANICAL NAME	COMMON NAME	% by Weight
1	Agropyron cristatum 'Fairway'	Fairway Crested Wheatgrass	15%
2	Agropyron riparium 'Sodar'	Streambank Wheatgrass	20%
3	Bromus inermis 'Manchar'	Smooth Brome	32%
4	Fescue rubra 'Fortress'	Red Fescue	25%
5	Poa compressa 'Reuben's'	Reuben's Canadian Bluegrass	6%
6	Trifolium repens	White Dutch Cover	2%

PART 3 EXECUTION

3.4 SEEDING

Revise paragraph A to read as follows:

A. Apply seed at a rate of eight (8) pounds per 1,000 square feet evenly in two (2) intersecting directions. Rake in lightly.

Add Section 33 05 12 Conductive Tracer Wire for Pipe Installation

SECTION 33 05 12
CONDUCTIVE TRACER WIRE FOR PIPE INSTALLATION

PART 1 GENERAL

1.1 **SUMMARY**
This section covers the requirements for installation of a conductive tracer wire with underground pipe

1.2 **SYSTEM DESCRIPTION**
Install electrically continuous tracer wire with access points as described herein to be used for locating pipe with an electronic pipe locator after installation.

PART 2 PRODUCTS

2.1 Tracer wire shall be twelve (12) gauge minimum solid copper with thermoplastic insulation recommended for direct burial. Wire connectors shall be 3M DBR, or approved equal, and shall be watertight and provide electrical continuity.

PART 3 EXECUTION

3.1 **ERECTION / INSTALLATION / APPLICATION AND/OR CONSTRUCTION**
A. General: Tracer wire shall be installed in the same trench and inside bored holes and casing with pipe during pipe installation. It shall be secured to the pipe as required to insure that the wire remains adjacent to the pipe. The tracer wire shall be securely bonded together at all wire joints with an approved watertight connector to provide electrical continuity, and it shall be accessible at all new water valve boxes, water meter boxes, fire hydrants, sewer manholes, and sewer cleanouts as applicable to the utility line being installed.

B. Manholes: The wire shall be installed from the exterior of the manhole to the interior by installing the wire underneath the manhole frame.

3.2 **TESTING**
CONTRACTOR shall perform a continuity test on all tracer wire in the presence of ENGINEER of ENGINEER's representative. Testing shall be performed prior to road construction.

3.3 **REPAIR / RESTORATION**
If the tracer wire is found to be not continuous after testing, CONTRACTOR shall repair or replace the failed segment of wire.

END OF SECTION

SECTION 33 05 25 M
PAVEMENT RESTORATION (Modified)

PART 1 GENERAL

1.2 REFERENCES

Replace paragraph A to read as follows:

A. **South Weber City Public Works Standard Drawings**

PART 2 PRODUCTS

2.2 ASPHALT PAVEMENT

Revise paragraph A to read as follows:

A. Permanent Warm Weather Asphalt Concrete: Section 32 12 05 M unless indicated otherwise.

Revise paragraph C to read as follows:

C. Pavement Sealing:

1. Crack Seal: Section 32 01 17
2. Chip Seal: Section 32 01 13.64 and 32 01 13.64 M.
3. Fog Seal: Section 32 01 13.50.

PART 3 EXECUTION

3.5 ASPHALT PAVEMENT RESTORATION

Revise paragraphs A and B to read as follows:

A. Follow South Weber City Public Works Standard Drawings.

B. Match existing pavement thickness or 4-inches minimum, whichever is greater.

SECTION 33 08 00 M
COMMISSIONING OF WATER UTILITIES (Modified)

PART 3 EXECUTION

3.5 **INFILTRATION TEST**

Revise paragraph A to read as follows:

A. General: 150 gallons per inch diameter per mile per day. If the ground water table is less than two (2) feet above the crown of the pipe, the infiltration test is not required.

Revise Article 3.6 in its entirety to read as follows:

3.6 **EXFILTRATION TEST**

A. Non-Pressurized System:

1. General: Air test or hydrostatic test is CONTRACTOR's choice.
2. Air Test:
   a. Plastic Pipe: ASTM F 1417.
      (i) For pipe up to 30 inches diameter, pressure drop is 0.5 psi.
      (ii) For pipe larger than 30 inches diameter, isolated joint test is 3.5 psi maximum pressure drop is 1.0 psi in 5 seconds.
   b. Concrete Pipe:
      (i) ASTM C 1214 for concrete pipe 4" to 24" diameter.
      (ii) ASTM C 1103 for concrete pipe 27" and larger.
3. Hydrostatic Test: Provide air release taps at pipeline's highest elevations and expel all air before the test. Insert permanent plugs after test has been completed.
   a. Plastic Pipe: ASTM F 2497.
   b. Concrete Pipe: ASTM C 497. Abide by Section 3 and Section 16 in the ASTM standard and applicable recommendations of manufacturer.

B. Pressurized System:

1. Pressure Test: All newly laid pipe segments and their valves, unless otherwise specified, shall be subjected to a hydrostatic pressure test of 225 psi or 50 psi above working pressure, whichever is higher. The hydrostatic pressure test shall be conducted after the pipe segments have been partially backfilled.
2. Duration of Pressure Test: The duration of each hydrostatic pressure test shall be at least two (2) hours.
3. Test Procedure: Each pipe segment shall be slowly filled with water and the specified test pressure, measured at the point of lowest elevation, shall be applied by means of a pump connected to the pipe in a satisfactory manner. Testing against closed valves will be allowed. The pump, pipe connection, and all necessary apparatus including gauges

and meters shall be furnished by the CONTRACTOR. CONTRACTOR shall provide all labor and equipment necessary to perform the test.

4. Expelling Air Before Test: Before applying the specified test pressure, all air shall be expelled from the pipe. To accomplish this, air release mechanisms shall be installed, if necessary, at points of highest elevation, and afterwards tightly capped.

5. Examination Under Pressure: All pipes, fittings, valves, hydrants, joints, and other hardware will be subject to examination under pressure during the hydrostatic test. Any defective pipes, fittings, hydrants, valves, or other hardware discovered in consequence of this pressure test shall be removed and replaced by the CONTRACTOR with sound material, at no expense to the OWNER, and the test shall be repeated until the ENGINEER is satisfied.

6. No piping installation will be acceptable until the leakage is less than the amount allowed by industry standards for the type of pipe material being tested. Or, if no standard prevails, than the number of gallons per hour is determined by the formula:

$$Q = \frac{LD\sqrt{P}}{148{,}000}$$

Where: Q = allowable leakage, gallons per hour

L = length of pipe under test, feet

D = diameter of pipe, inches

P = average test pressure, psig

SECTION 33 11 00 M
WATER DISTRIBUTION AND TRANSMISSION (Modified)

PART 1 GENERAL

1.2 REFERENCES

Revise paragraph B to read as follows:

B. **South Weber City Public Works Standard Drawings**

Add to paragraph C. AWWA Standards:

C105	Polyethylene Encasement for Ductile Iron Pipe Systems
C110	Ductile-Iron and Gray-Iron Fittings
C111	Rubber-Gasket Joints for Ductile-Iron Pressure Pipe and Fittings
C223	Fabricated Steel and Stainless Steel Tapping Sleeves
M14	AWWA Recommended Practice for Backflow Prevention and Cross-Connection Control

Add paragraph F and G as follows:

F. ANSI/NSF Standards:

61	Drinking Water System Components

G. Utah Administrative Code

R309	Drinking Water

1.3 PERFORMANCE REQUIREMENTS

Replace paragraph A with the following:

A. Depth of Cover:

1. Minimum as indicated on the drawings. If minimum cannot be achieved, contact ENGINEER.
2. Maximum of 72 inches unless indicated on the plans or approved by ENGINEER.

1.5 SITE CONDITIONS

Revise paragraph D to read as follows:

D. Do not operate <u>any</u> water valve until its owner and water company's permission is secured.

PART 2 PRODUCTS

2.1 PIPES AND FITTINGS

Revise paragraph A to read as follows:

A. Provide piping materials and factory fabricated piping products of sizes, types, pressure ratings, and capacities indicated. Use only NSF 61 approved products in drinking water systems. All such products shall be appropriately stamped with the NSF logo.

Add paragraphs E and F as follows:

E. Mechanical Joint Fittings: Ductile iron, Class 250

F. Flanged Fittings: Ductile iron, Class 250

2.3 VALVE BOX

Revise paragraph A to read as follows:

A. Buried Valves in Traffic Areas: Cast iron two (2) piece slip sleeve type, 5-1/4 inch shaft, with a drop lid, rated for HL-93 loading.

Revise paragraph C to read as follows:

C. Markings: Potable water main line valves box covers shall contain the wording "SOUTH WEBER WATER."

Add Articles 2.9 and 2.10 as follows:

2.9 TAPPING SLEEVE AND VALVE

A. AWWA C223.

B. Sleeve shall be full circumferential seat with all stainless steel tapping sleeve.

C. Flanged outlet with flanged by MJ valve.

2.10 FIRE SPRINKLER/SUPRESSION LINES

A. Lines:

1. Ductile iron, Class 51, or as approved in writing by OWNER or ENGINEER.
2. Meet all specifications for main lines.

B. Valve:

1. All fire lines shall be equipped with an isolation gate valve located at the main line.

PART 3 EXECUTION

3.3 LAYOUT

Replace paragraph B with the following:

B. The Utah Division of Drinking Water must grant an exception where a potable water line crosses under a sanitary sewer line.

3.4 INSTALLATION – PIPE AND FITTING

A. General:

Add subparagraphs 3 through 7 as follows:

3. Encase all buried ductile iron valves, fitting, connections, and specialties in minimum 8 mil. polyethylene sheets in accordance with AWWA C105.
4. Waterline shall be laid and maintained to lines and grades established by the drawings, with fittings and valves at the required locations. Deviations as approved in writing by OWNER or ENGINEER.
5. Lay water lines on a continuous grade to avoid high points except as shown on the plans.
6. Cut edges and rough ends shall be ground smooth. Bevel end for push-on connections.
7. Do not drop pipe or fittings into trench.

Add paragraph I as follows:

I. Tie-Ins:

1. All tie-ins shall be made dry and not on a day proceeding a weekend or holiday.
2. OWNER requires 48-hours' notice for water turn-off.
3. At least 24-hours prior to a service disruption, CONTRACTOR shall notify all affected water users.
4. Where shutting down a line is not feasible as determine by OWNER or ENGINEER, CONTRACTOR shall make a wet tap using a tapping sleeve and valve.

3.5 INSTALLATION – CONCRETE THRUST BLOCK

Revise paragraph A to read as follows:

A. South Weber City Public Works Standard Drawings.

3.8 INSTALLATION – TAPS

Revise paragraph A to read as follows:

A. South Weber City Public Works Standard Drawings.

3.9 INSTALLATION – SERVICE LINE

Revise paragraph C to read as follows:

C. Meter Box: South Weber City Public Works Standard Drawings.

Add paragraph D as follows:

D. New Water Service Line

1. 1" Service

a. All laterals must be of one continuous copper tube between the corp stop and the meter box. No joints or copper to copper connectors are allowed.

2. 1.5" and 2" Services

a. All solder joints shall be 95-5 solder or better, or Mueller compression fittings.

3.10 INSTALLATION – WATERMAIN LOOP (SYPHON)

Revise paragraph A to read as follows:

A. South Weber City Public Works Standard Drawings.

3.12 BACKFILLING

B. Trenches: Section 33 05 20:

Revise subparagraphs 1 and 2 to read as follows:

1. Pipe zone backfill, South Weber City Public Works Standard Drawings.
2. Trench backfill, South Weber City Public Works Standard Drawings.

3.13 SURFACING RESTORATION

A. Roadway Trenches and Patches: Section 33 05 25:

Revise subparagraphs 1 and 2 to read as follows:

1. Asphalt concrete patch, South Weber City Public Works Standard Drawings.
2. Concrete pavement patch, contact OWNER for instructions.

Add new Article 3.14 as follows:

3.14 FIRE SPRINKLER/SUPPRESSION LINES

A. Notify OWNER 48 hours prior to installation.

B. Unless written authorization is given by OWNER, no services shall be connected to the fire sprinkler/suppression lines.

C. Location: As approved by OWNER.

SECTION 33 12 16 M
WATER VALVES (Modified)

PART 1 GENERAL

1.2 REFERENCES

Modify the fourth (4th) item in paragraph A to read as follows:

C509 Resilient-Seated Gate Valves for Water Supply Service

Add paragraph B as follows:

B. **South Weber City Public Works Standard Drawings**

PART 2 PRODUCTS

2.1 VALVES – GENERAL

A. Underground:

Add subparagraph 3 as follows:

3. Valves over five (5) feet in depth shall have a valve nut extension stem.

2.2 GATE VALVES

Add paragraph D as follows:

D. Model: Mueller A-2361

Add Article 2.10 as follows:

2.10 AIR/VACUUM RELIEF VALVES

A. Operation: Relieve air build-up and/or allow intrusion of air to prevent vacuum conditions within pipe.

B. Location: Valve and vent placement location as approved by OWNER or ENGINEER.

C. Connection: Service saddle.

PART 3 EXECUTION

3.1 INSTALLATION

Add paragraphs D, E, and F as follows:

D. Prior to installation, inspect valves for direction of opening, freedom of operation, tightness of pressure-containing bolting, and cleanliness of valve ports and seating surfaces.

E. Examine all valves for damage or defects immediately prior to installation.

F. Mark and hold defective materials for inspection by OWNER or ENGINEER. Replace rejected materials.

SECTION 33 12 19 M
HYDRANTS (Modified)

PART 1 GENERAL

1.2 REFERENCES

Revise paragraph A to read as follows:

A. **South Weber City Public Works Standard Drawings**

PART 2 PRODUCTS

2.1 DRY-BARREL FIRE HYDRANT

Add paragraph C as follows:

C. Model: Mueller Super Centurion.

2.2 VALVES

Revise paragraph A to read as follows:

C. Gate Valve: Section 33 12 16.

2.3 ACCESSORIES

Revise paragraph D to read as follows:

D. Valve Box, Valve Chamber: Section 33 11 00.

PART 3 EXECUTION

3.2 INSTALLATION

Revise paragraph A to read as follows:

C. Install hydrant according to South Weber City Public Works Standard Drawings and AWWA M17.

Revise paragraph H to read as follows:

H. Install thrust block according to South Weber City Public Works Standard Drawings.

SECTION 33 12 33 M
WATER METER (Modified)

PART 1 GENERAL

1.2 REFERENCES

Add paragraph B as follows:

E. **South Weber City Public Works Standard Drawings.**

PART 2 PRODUCTS

2.2 METERS FOR SERVICE PIPING

Revise paragraph A to read as follows:

F. OWNER shall supply and set all 1” meters. All other meters supplied and set by CONTRACTOR.

2.3 SERVICE LINE, VALVES, AND FITTINGS

Revise paragraph A to read as follows:

A. Service Pipe: Type K Copper, Section 33 05 03, with compression copper fittings made of brass.

Revise paragraph B to read as follows:

B. Service Valves and Fittings:

1. AWWA C800.
2. 1-Inch Service Laterals – Brass corporation stops with CC thread.
3. 1.5-Inch and 2-Inch Service Laterals – Copper or brass screw-type fittings (ball valves, strainers, nipples, tees, bends, etc.).
4. Greater than 2-Inch – Coordinate with and obtain approval from OWNER and ENGINEER.

Replace Article 2.4 with the following:

2.4 METER BOXES

A. See South Weber City Public Works Standard Drawings.

PART 3 EXECUTION

3.1 INSTALLATION

Revise paragraph D to read as follows:

D. OWNER Supplied Meters: Installed by OWNER unless indicated otherwise.

Add paragraphs E and F as follows:

E. Install one solid piece of copper pipe from main to meter.

F. Install service laterals with 60-inches of cover, minimum.

SECTION 33 13 00 M
DISINFECTION (Modified)

PART 1 GENERAL

1.2 REFERENCES

Modify paragraph B to read as follows:

B. Utah Administrative Code

R309 Drinking Water

Add paragraph C as follows:

C. NSF/ANSI Standards:

60 Drinking Water Treatment Chemicals – Health Effects

1.4 SUBMITTALS

Delete paragraphs B, C, and D in their entirety.

Add Article 1.8 as follows:

1.8 WORK PERFORMED BY OWNER

A. OWNER will perform bacteriological and high chlorine sampling and testing. CONTRACTOR shall provide all other work associated with this Section.

PART 2 PRODUCTS

1.1 DISINFECTANT

Add paragraph E as follows:

E. All products shall comply with NSF/ANSI 60.

PART 3 EXECUTION

3.1 PREPARATION

Add paragraphs C and D as follows:

C. Notify OWNER at least 72 hours prior to any flushing or disinfecting.

D. Install temporary connections for flushing water lines after disinfection. After the satisfactory completion of the flushing work, remove and plug the temporary connection.

3.2 DISINFECTION OF WATER LINES

Revise paragraph D to read as follows:

D. Coordinate with OWNER to collect a bacteriological water sample at end of line to be tested. If sample fails bacteriological test, flush system and retest. Continue flushing and retesting until sample passes test.

Revise paragraph G to read as follows:

G. After a passing bacteriological test sample is obtained, let the system relax for 24 hours. Flush and coordinate with OWNER to collect a subsequent bacteriological sample for testing. If the subsequent test passes, then water line is acceptable.

3.5 FIELD QUALITY CONTROL

A. Bacteriological Test:

Revise subparagraphs 1 and 2 to read as follows:

1. Coordinate with OWNER to collect samples for testing no sooner than 16 hours after system flushing.
2. OWNER will have water samples analyzed per State of Utah requirements.

Add Article 3.6 as follows:

3.6 SPECIAL PROCEDURE FOR TAPPING SLEEVES

A. Before a tapping sleeve is installed, the exterior of the main to be tapped shall be thoroughly cleaned, and the interior surface of the sleeve shall be lightly dusted with calcium hypochlorite powder.

APPENDIX D – SOUTH WEBER CITY PUBLIC WORKS STANDARD DRAWINGS

DocuSign Envelope ID: AACAAD7B-F1CB-4C7E-A94A-B6D9646997F7

SOUTH WEBER CITY CORPORATION

PUBLIC WORKS STANDARD DRAWINGS

SUBMITTED & RECOMMENDED

BRANDON K. JONES, P.E. — DATE 1/10/23
SOUTH WEBER CITY ENGINEER

REGISTERED PROFESSIONAL ENGINEER
BRANDON KENT JONES
No. 5148758
State of Utah

APPROVAL

DocuSigned by: Rod Westbroek — 1/11/2023
314386B5085247A...
ROD WESTBROEK — DATE
SOUTH WEBER CITY MAYOR

DocuSigned by: David J. Larson — 1/11/2023
051A8FAC8557488...
DAVID J. LARSON — DATE
SOUTH WEBER CITY MANAGER

DocuSigned by: — 1/11/2023
D3603EA2F3B74C0...
TREVOR CAHOON — DATE
SOUTH WEBER CITY COMMUNITY & PLANNING DIRECTOR

DocuSigned by: Mark B. Larsen — 1/11/2023
F88797E742EC406...
MARK B. LARSEN — DATE
SOUTH WEBER CITY PUBLIC WORKS DIRECTOR

DocuSigned by: Lisa Smith — 1/11/2023
EA6086371DCF4D1...
LISA SMITH — DATE
ATTEST, SOUTH WEBER CITY RECORDER

JONES & ASSOCIATES
CONSULTING ENGINEERS

SOUTH WEBER city

ADOPTED JANUARY 10, 2023

Index of Drawings (33 Sheets)

ROAD IMPROVEMENT STANDARDS
R1.....TYPICAL LOCAL STREET SECTION & UTILITY LATERAL CONFIGURATION DETAILS
R2.....SOUTH WEBER DRIVE & COLLECTOR ROADWAY TYPICAL CROSS SECTION DETAILS
R3.....PRIVATE ROADWAY STREET CROSS SECTION DETAILS
R4.....TYPICAL STREET INTERSECTION & STREET MONUMENT DETAILS
R5.....TYPICAL DRIVE APPROACH DETAILS
R6.....TYPICAL ADA RAMP DETAILS
R7.....CUL-DE-SAC & TEMPORARY TURNAROUND DETAILS
R8.....PRIVATE ROAD CUL-DE-SAC AND HAMMERHEAD TURNAROUND DETAILS
R9.....STREET SIGN DETAILS
R10....TYPICAL SIDEWALK, CURB & GUTTER, CONCRETE COLLAR, AND DEFECTIVE CONC. REPLACEMENT DETAILS
R11....UTILITY TRENCH AND ASPHALT PATCH PLAN DETAILS
R12....APWA PLAN 255 BITUMINOUS PAVEMENT T-PATCH

CULINARY WATER SYSTEM STANDARDS
CW1....RESIDENTIAL WATER SERVICE CONNECTION DETAILS
CW2....FIRE HYDRANT, GATE VALVE, AND AIR/VACUUM RELIEF STATION DETAILS
CW3....TRACER WIRE INSTALLATION DETAILS
CW4....TYPICAL WATER METER STATIONS
CW5....PRESSURE REDUCTION STATION
CW6....THRUST BLOCK, WATERLINE LOOP, AND MISC. VAULT DETAILS
CW7....REDUCED PRESSURE (RP) BACKFLOW PREVENTION ASSEMBLY

SANITARY SEWER SYSTEM STANDARDS
SS1.....SEWER / LAND DRAIN LATERAL & MAIN LINE CONNECTION DETAILS
SS2.....SANITARY SEWER MANHOLE DETAILS

STORM DRAIN SYSTEM STANDARDS
SD1....SINGLE AND DOUBLE CATCH BASIN DETAILS
SD2....DRAINAGE INLET BOX AND GENERAL GRATE & FRAME DETAILS
SD3....STORM DRAIN MANHOLE DETAILS
SD4....LARGE DETENTION BASIN DETAILS
SD5....SMALL DETENTION BASIN DETAILS

GENERAL CONSTRUCTION & LANDSCAPING STANDARDS
G1.....CHAIN LINK FENCE STANDARD DETAILS
G2.....WATER EFFICIENT LANDSCAPING

STREET LIGHTING STANDARDS
SL1.....POLES AND FIXTURES
SL2.....DEVELOPER/CONTRACTOR INSTALLATION PORTION OF STREETLIGHT STANDARDS
SL3.....CITY CONTRACTOR INSTALLATION PORTION OF STREETLIGHT STANDARDS
SL4.....ROCKY MOUNTAIN POWER CONNECTION DETAILS

LID (LOW IMPACT DEVELOPMENT) STANDARDS
LID1....GENERAL LID (LOW IMPACT DEVELOPMENT) EXAMPLES

GENERAL NOTES:

1. PROVIDE 4" THICKNESS OF 3/4" OR 1" UNTREATED BASE COURSE UNDER SIDEWALK, DRIVEWAY APPROACHES AND CURB & GUTTER, COMPACTED TO 95%, PER ASTM D-1557.

2. THESE PAVEMENT THICKNESS SHALL BE CONSIDERED AS CITY MINIMUMS AND MAY BE INCREASED BY THE CITY ENGINEER WHEN A GREATER DEPTH IS NECESSARY TO PROVIDE SUFFICIENT STABILITY. DESIGNER AND/OR DEVELOPER MAY SUBMIT AN ALTERNATIVE PAVEMENT DESIGN BASED ON A DETAILED SOILS ANALYSIS FOR APPROVAL BY THE CITY ENGINEER WHICH MAY MODIFY PAVEMENT THICKNESS, BUT IN NO CASE SHALL THE BITUMINOUS SURFACE COURSE BE LESS THAN 4" AND UNTREATED BASE COURSE LESS THAN 12" THICK.

3. ALL ROAD CUTS SHALL BE PATCHED PER R11 AND R12

4. CURB & GUTTER AND SIDEWALKS SHALL BE CONSTRUCTED USING FIBER REINFORCED CONCRETE AND IN COMPLIANCE WITH SOUTH WEBER CITY TECHNICAL SPECIFICATIONS AND THESE DRAWINGS.

5. ALL CULINARY WATER MAINS AND SERVICES MUST MAINTAIN A MINIMUM SEPARATION FROM ALL SEWER MAINS AND LATERALS OF 10'-0" HORIZONTAL AND 18" VERTICAL IN ACCORDANCE WITH THE STATE OF UTAH DIVISION OF DRINKING WATER RULES SECTION R309-550-7

6. THE 6'-0" SIDEWALK SHOWN ABOVE IS TO BE CONSIDERED THE "CITY STANDARD." OTHER LOCATIONS AND TYPES OF SIDEWALK AS REQUESTED BY THE DEVELOPER MUST BE APPROVED BY THE CITY. IF SIDEWALK IS LOCATED AGAINST THE TBC, IT MUST BE A MINIMUM OF 6 FEET IN WIDTH.

7. NATURAL GAS TYPICALLY LOCATED IN THE PARKSTRIP, POWER AND COMMUNICATION LINES TYPICALLY LOCATED BEHIND PROPERTY LINES OR IN LOT EASEMENTS.

8. "SEAL COAT" CONSISTS OF THE FOLLOWING:
   a. CHIP SEAL PER APWA 32 01 13.64 AND CITY MODIFICATIONS, AND
   b. FOG SEAL PER APWA 32 01 13.50 AND CITY MODIFICATIONS.

9. IMPORTED FILL UNDER ROADWAY SHALL BE GRANULAR BORROW 2" MAX.

10. PRIOR TO THE INSTALLATION OF PAVEMENT, THE CITY INSPECTOR MUST GIVE WRITTEN PERMISSION TO PROCEED.

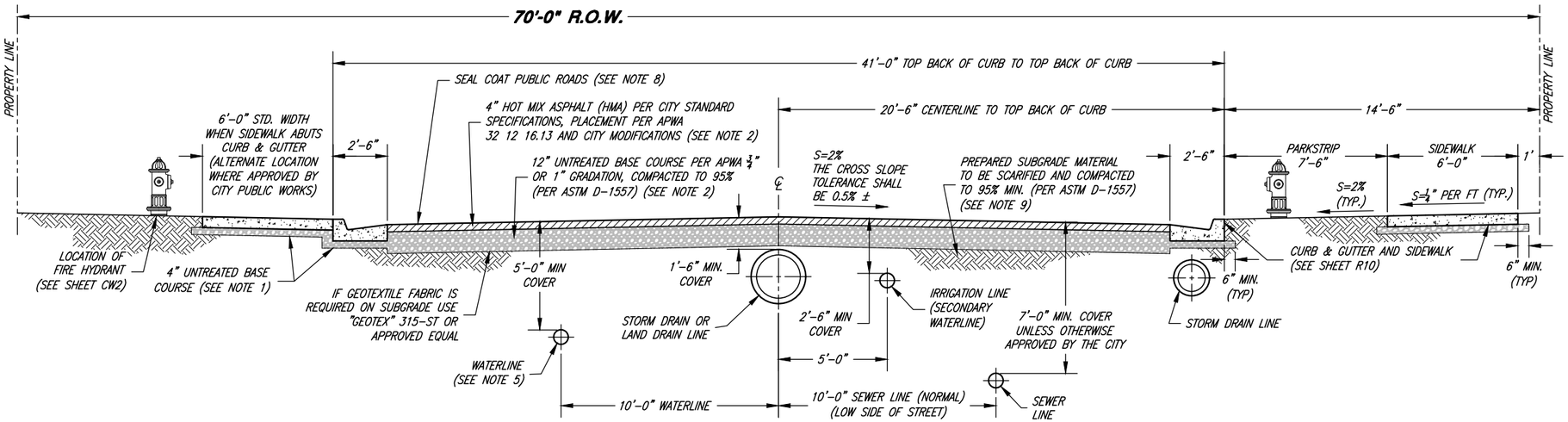

STANDARD LOCAL STREET SECTION

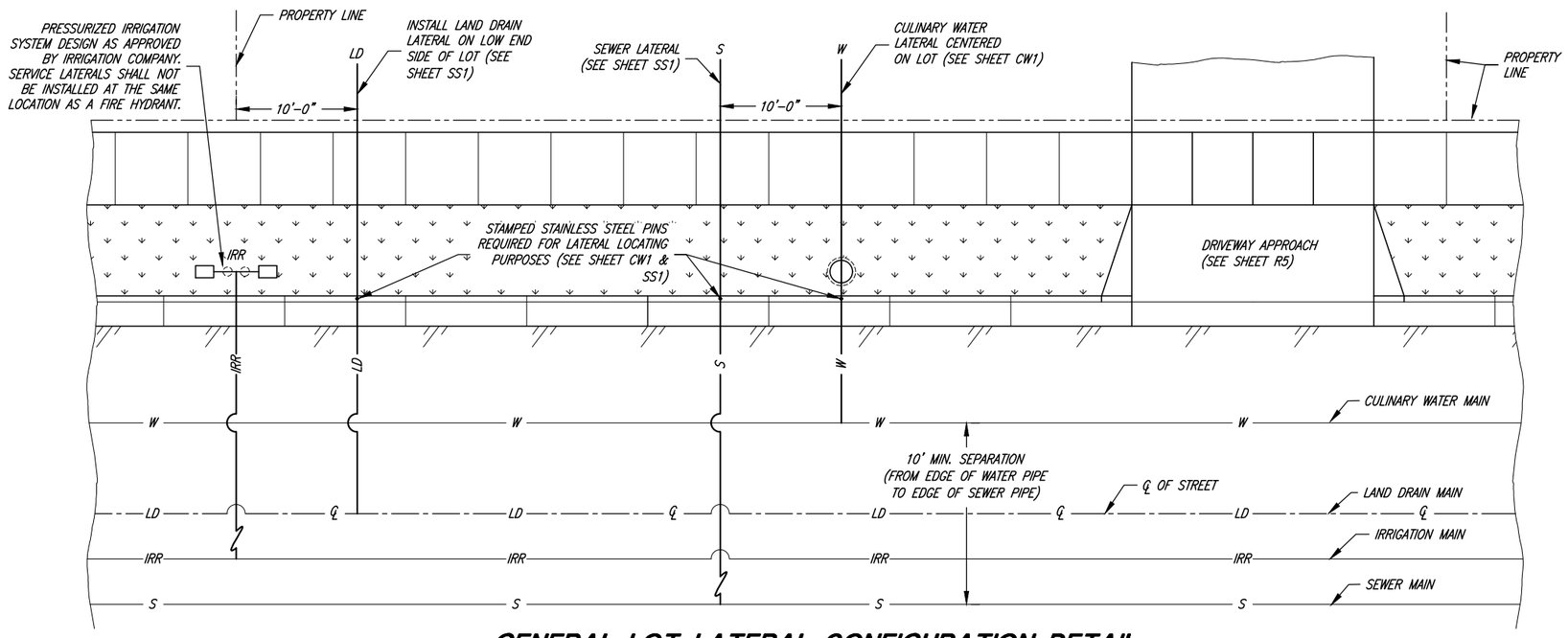

GENERAL LOT LATERAL CONFIGURATION DETAIL

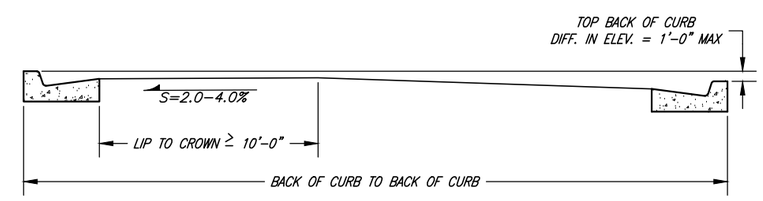

CROWN LOCATION FOR VARIOUS CROSS SLOPES

CROWN NOTES:

A. MAXIMUM DIFFERENCE IN ELEVATION BETWEEN CURBS ON OPPOSITE SIDES OF THE STREET SHALL NOT EXCEED 1'-0" AS SHOWN IN DETAIL.

B. ON CERTAIN STREETS APPROVED BY THE CITY COUNCIL, THE CITY ENGINEER WILL PROVIDE A PAVEMENT DESIGN. LOCATION OF SIDEWALK AND CURB & GUTTER MAY VARY PER DIRECTION OF THE CITY ENGINEER.

C. ALL STREET CROSS SECTIONS SHALL BE AS APPROVED BY THE CITY ENGINEER.

REGISTERED PROFESSIONAL ENGINEER BRANDON KENT JONES No. 5149758 State of Utah

PROJECT ENGINEER 1/10/2023 DATE

REV.	DATE	APPR.

SCALE: N.T.S.

DESIGNED BKJ
DRAWN BEB
CHECKED BKJ

JONES & ASSOCIATES CONSULTING ENGINEERS
6080 Fashion Point Drive
South Ogden, Utah 84403 (801) 476-9767
www.jonescivil.com

SOUTH WEBER city

SOUTH WEBER CITY CORPORATION
PUBLIC WORKS - ROAD IMPROVEMENT STANDARDS
TYPICAL LOCAL STREET SECTION & UTILITY LATERAL CONFIGURATION DETAILS

SHEET: R1 OF 33 SHEETS 0

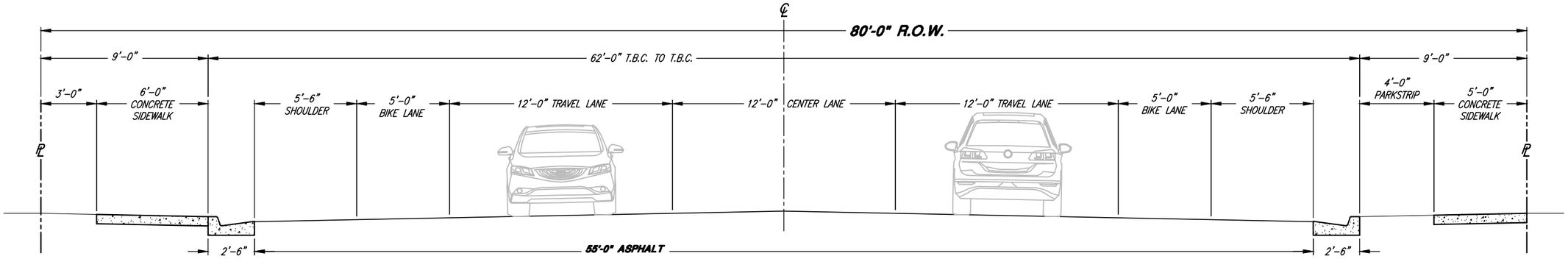

SOUTH WEBER DRIVE R.O.W. SECTION

THE 80'-0" ROADWAY SECTION SHOWN ABOVE IS TO BE CONSIDERED THE "CITY STANDARD" FOR SOUTH WEBER DRIVE. WHERE DESIGNATED BY THE CITY ON A CASE BY CASE BASIS IN AREAS OF PRE-EXISTING ROADWAY IMPROVEMENTS, ALTERNATE STREET CROSS SECTION DESIGNS MAY BE USED WITH THE PRIOR APPROVAL OF THE CITY ENGINEER AND THE CITY PUBLIC WORKS DEPARTMENT. SUBMIT ENGINEERED CONSTRUCTION PLANS TO THE CITY ENGINEER FOR REVIEW AND WRITTEN ACCEPTANCE PRIOR TO CONSTRUCTION.

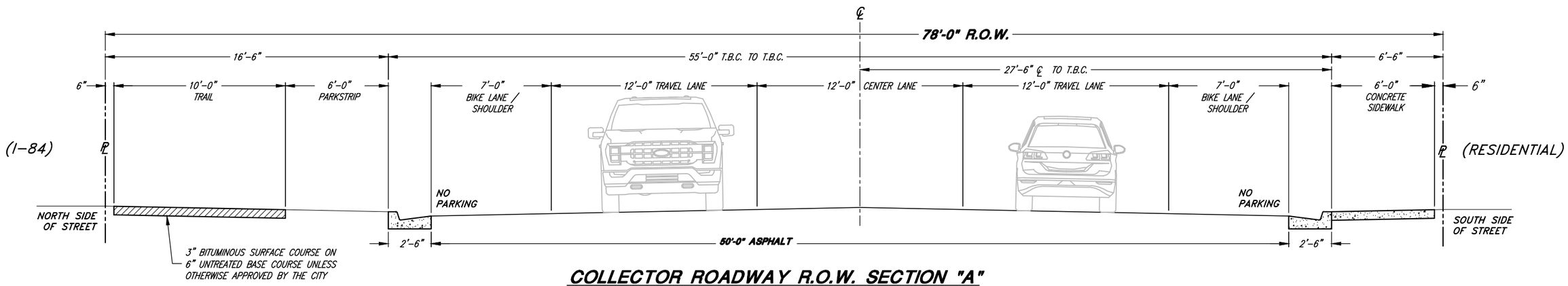

COLLECTOR ROADWAY R.O.W. SECTION "A"

(ADJACENT TO I-84)

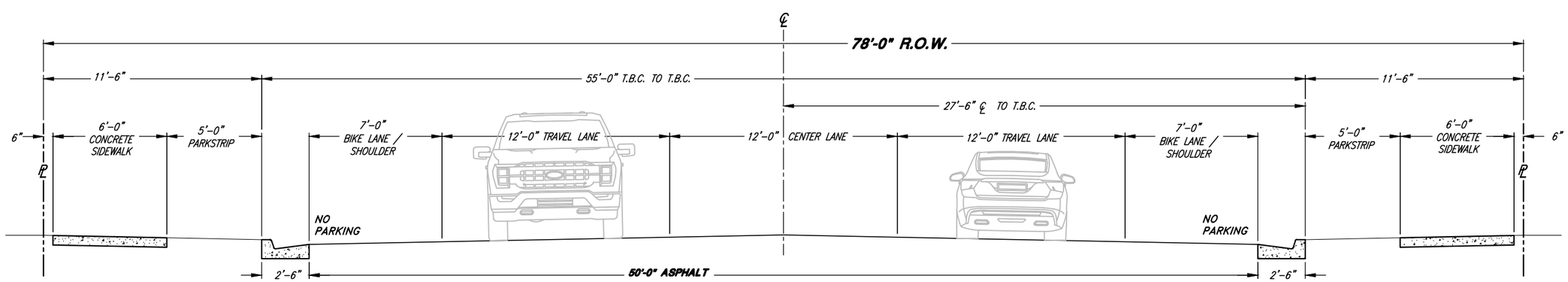

COLLECTOR ROADWAY R.O.W. SECTION "B"

(I-84 TO SOUTH WEBER DRIVE)

REGISTERED PROFESSIONAL ENGINEER
BRANDON KENT JONES
No. 5148758
State of Utah

Brandon K. Jones
PROJECT ENGINEER
1/10/2023
DATE

REV.	DATE	APPR.

SCALE: N.T.S.

DESIGNED BKJ
DRAWN BEB
CHECKED BKJ

JONES & ASSOCIATES
CONSULTING ENGINEERS
6080 Fashion Point Drive
South Ogden, Utah 84403 (801) 476-9767
www.jonescivil.com

SOUTH WEBER city

SOUTH WEBER CITY CORPORATION
PUBLIC WORKS - ROAD IMPROVEMENT STANDARDS
SOUTH WEBER DRIVE & COLLECTOR ROADWAY
TYPICAL CROSS SECTION DETAILS

SHEET: R2
OF 33 SHEETS
0

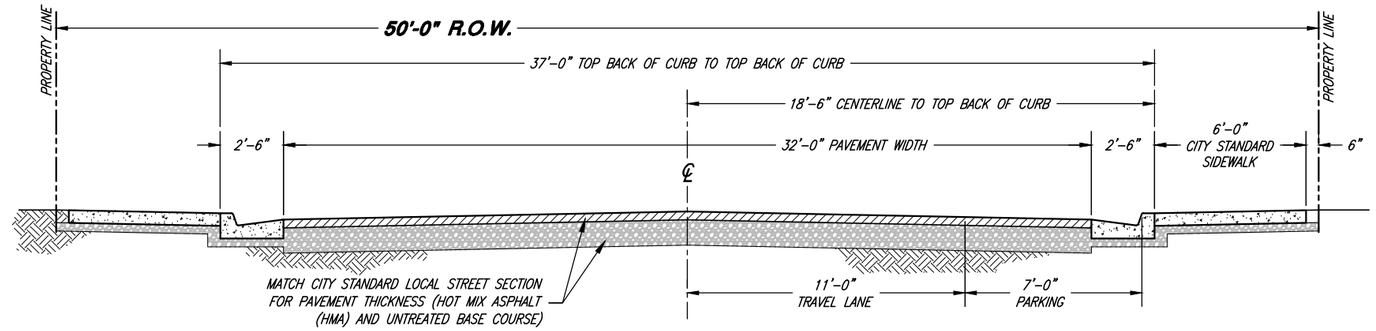

50' RIGHT-OF-WAY
PRIVATE ROADWAY STREET SECTION A

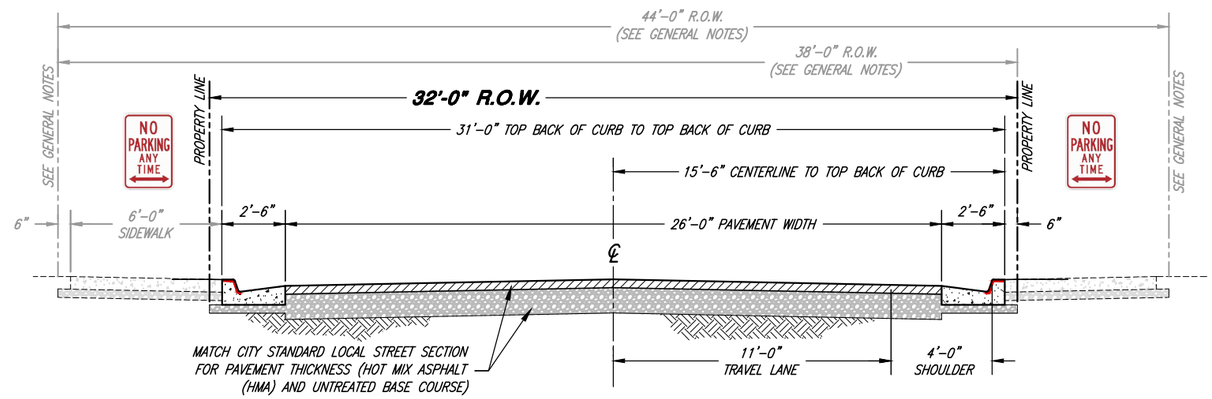

32' RIGHT-OF-WAY
PRIVATE ROADWAY STREET SECTION B

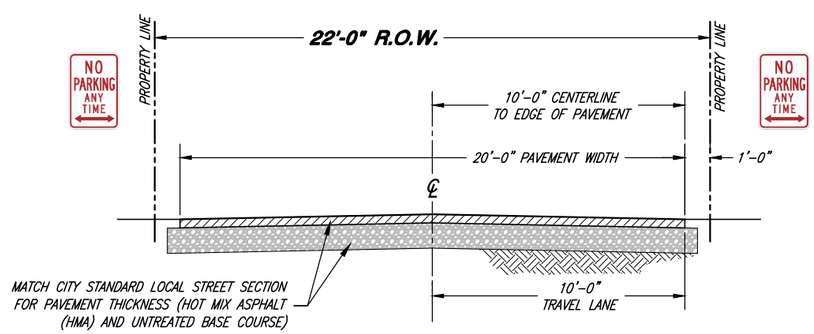

22' RIGHT-OF-WAY
PRIVATE ROADWAY STREET SECTION C

GENERAL NOTES:

1. SIDEWALK OR PEDESTRIAN PATH MUST BE MADE AVAILABLE ON THE FRONT FACADE OF RESIDENCE AND CONNECT TO A PUBLIC RIGHT-OF-WAY WITHOUT HAVING TO CROSS A ROAD.
2. IF THE NUMBER OF AND SPACING REQUIRED FOR UTILITIES CANNOT FIT WITHIN THE PAVEMENT WIDTH, THEN THE PAVEMENT WIDTH AND R.O.W. MUST BE WIDENED TO ACCOMMODATE THE UTILITIES.

REGISTERED PROFESSIONAL ENGINEER
BRANDON KENT JONES
No. 5148758
State of Utah

PROJECT ENGINEER
1/10/2023
DATE

REV.	DATE	APPR.

SCALE: N.T.S.

DESIGNED BKJ
DRAWN BEB
CHECKED BKJ

JONES & ASSOCIATES
CONSULTING ENGINEERS
6080 Fashion Point Drive
South Ogden, Utah 84403 (801) 476-9767
www.jonescivil.com

SOUTH WEBER city

SOUTH WEBER CITY CORPORATION
PUBLIC WORKS - ROAD IMPROVEMENT STANDARDS
PRIVATE ROADWAY STREET CROSS SECTION DETAILS

SHEET: R3
OF 33 SHEETS
0

STREET NOTES:

1. PRESSURIZED IRRIGATION SYSTEM LAYOUT AS APPROVED BY EITHER THE WEBER BASIN WATER CONSERVANCY DISTRICT, SOUTH WEBER WATER IMPROVEMENT DISTRICT, DAVIS AND WEBER COUNTIES CANAL COMPANY, OR THE SOUTH WEBER IRRIGATION COMPANY.
2. EXACT LOCATION OF STREET AND REGULATORY SIGNS SHALL BE SPECIFIED BY THE PUBLIC WORKS DIRECTOR.
3. THE NUMBER OF VALVES REQUIRED AT EACH INTERSECTION SHALL BE DETERMINED BY THE CITY ENGINEER.

(NOTES CONTINUED BELOW)

MAILBOX/CBU NOTES:

A1. MAILBOXES SHALL NOT BE PLACED IN THE SIDEWALK. NO MAILBOX OR CBU EDGES SHALL EXTEND PAST THE TBC.

A2. CONTACT THE LOCAL POSTMASTER FOR APPROVAL ON THE LOCATION OF THE MAILBOX OR CBU PRIOR TO INSTALLATION.

A3. FOLLOW USPS GUIDELINES & POLICIES FOR THE PLACEMENT, INSTALLATION, AND ACCESS REQUIREMENTS FOR ALL MAILBOX AND CBU UNITS.

A4. INDIVIDUAL MAILBOXES ALLOWED ONLY FOR SINGLE HOMES BEING BUILT IN SUBDIVISIONS THAT WERE PREVIOUSLY ALLOWED INDIVIDUAL BOXES.

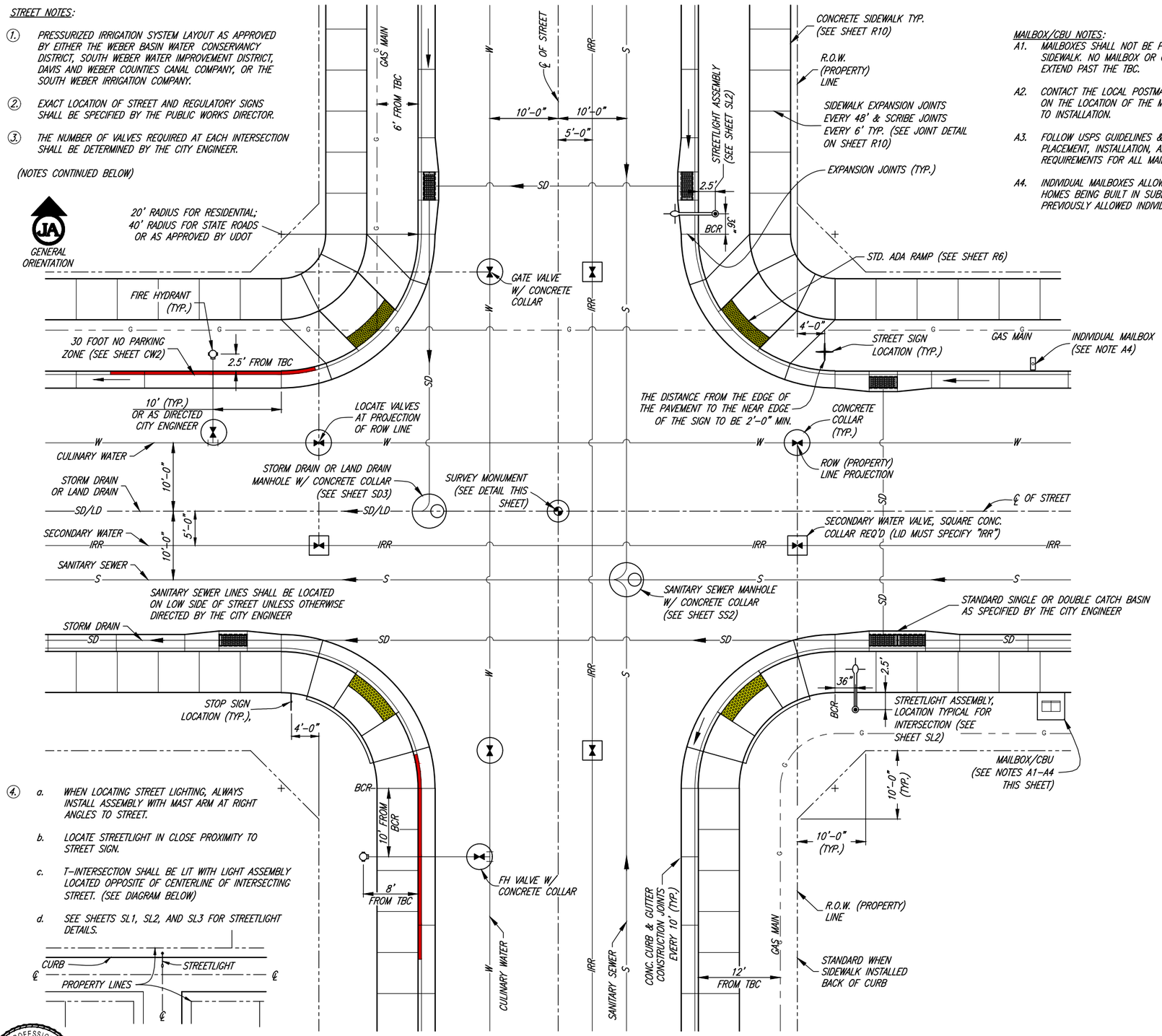

4. a. WHEN LOCATING STREET LIGHTING, ALWAYS INSTALL ASSEMBLY WITH MAST ARM AT RIGHT ANGLES TO STREET.

b. LOCATE STREETLIGHT IN CLOSE PROXIMITY TO STREET SIGN.

c. T-INTERSECTION SHALL BE LIT WITH LIGHT ASSEMBLY LOCATED OPPOSITE OF CENTERLINE OF INTERSECTING STREET. (SEE DIAGRAM BELOW)

d. SEE SHEETS SL1, SL2, AND SL3 FOR STREETLIGHT DETAILS.

SURVEY MONUMENT NOTES:

A. MARK POINT WITH AN "+" CENTER PUNCH ON BRASS SURVEY MONUMENT CAP

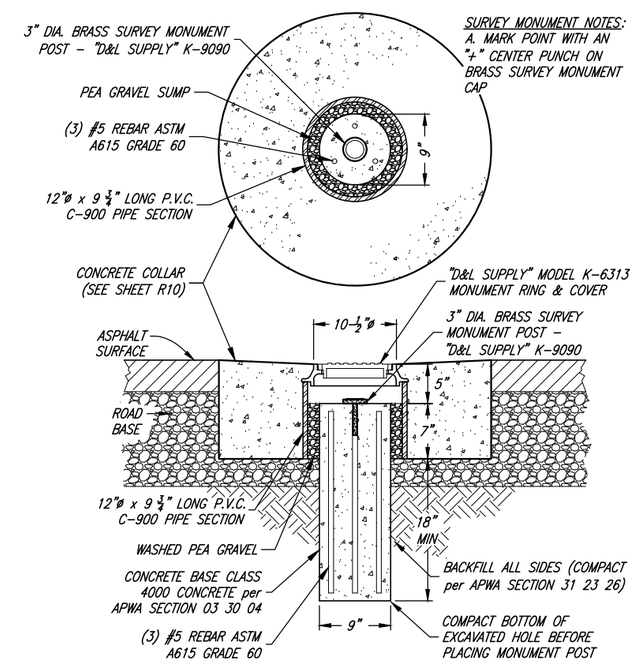

SURVEY MONUMENT DETAIL

REGISTERED PROFESSIONAL ENGINEER — BRANDON KENT JONES No. 5148758 — State of Utah

PROJECT ENGINEER

1/10/2023

DATE

REV.	DATE	APPR.

SCALE: N.T.S.

DESIGNED BKJ
DRAWN BEB
CHECKED BKJ

JONES & ASSOCIATES — CONSULTING ENGINEERS
6080 Fashion Point Drive
South Ogden, Utah 84403 (801) 476-9767
www.jonescivil.com

SOUTH WEBER city

SOUTH WEBER CITY CORPORATION

PUBLIC WORKS - ROAD IMPROVEMENT STANDARDS

TYPICAL STREET INTERSECTION & STREET MONUMENT DETAILS

SHEET: R4 OF 33 SHEETS

0

DRIVEWAY APPROACH NOTES:

1. IN NEW SUBDIVISIONS WHERE FUTURE DRIVEWAY LOCATIONS ARE UNKNOWN, THE DRIVEWAY APPROACH SHALL BE MADE BY SAW CUTTING THE BACK OF THE EXISTING CURB TO THE REQUIRED DRIVEWAY WIDTH. ALL SAW CUTTING SHALL BE ACCOMPLISHED BY A CITY APPROVED LICENSED CONTRACTOR.

2. SCORE SIDEWALK ½" OF SIDEWALK THICKNESS AT EACH 6'-0" SECTION. EXPANSION JOINTS AT EACH 48'-0", PROVIDE ADDITIONAL CONTRACTION JOINTS ON OVERSIZED DRIVEWAYS AT 5'-0" MAX. SPACING

3. APPROACHES SHALL NOT BE ALLOWED ON CORNER LOTS WITHIN THE CLEAR VIEW AREA.

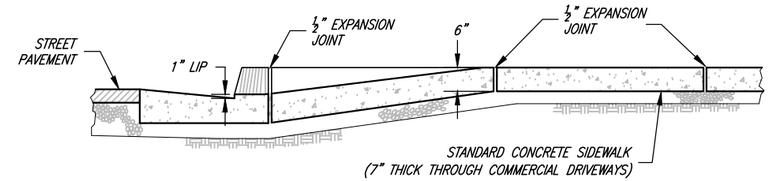

SECTION A–A

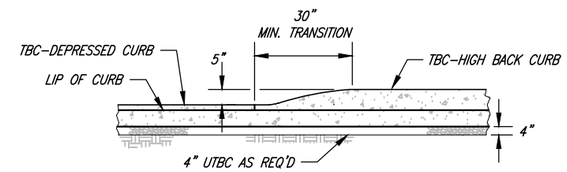

SECTION B–B

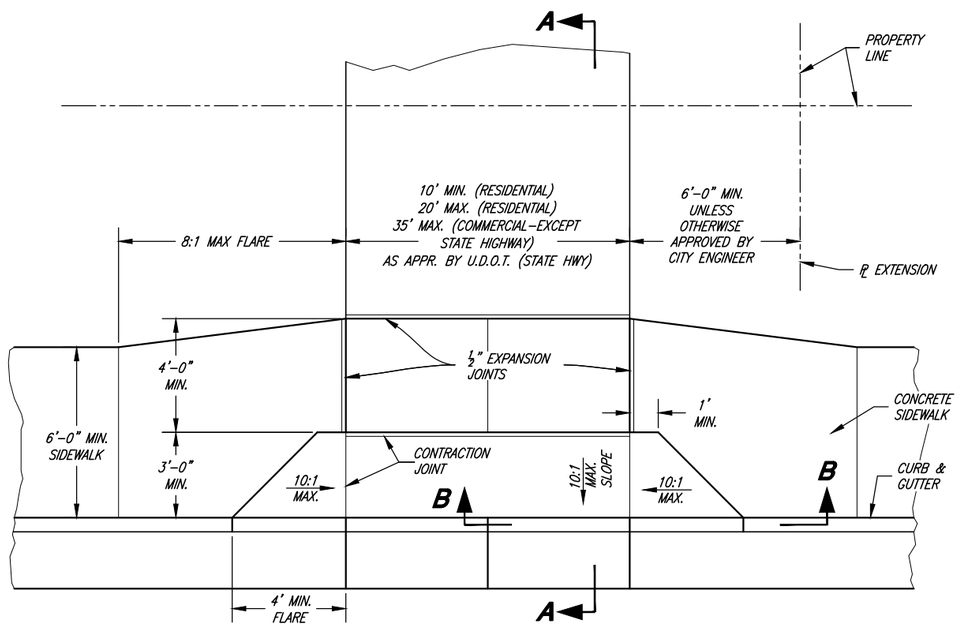

DRIVEWAY APPROACH W/ ADJACENT SIDEWALK

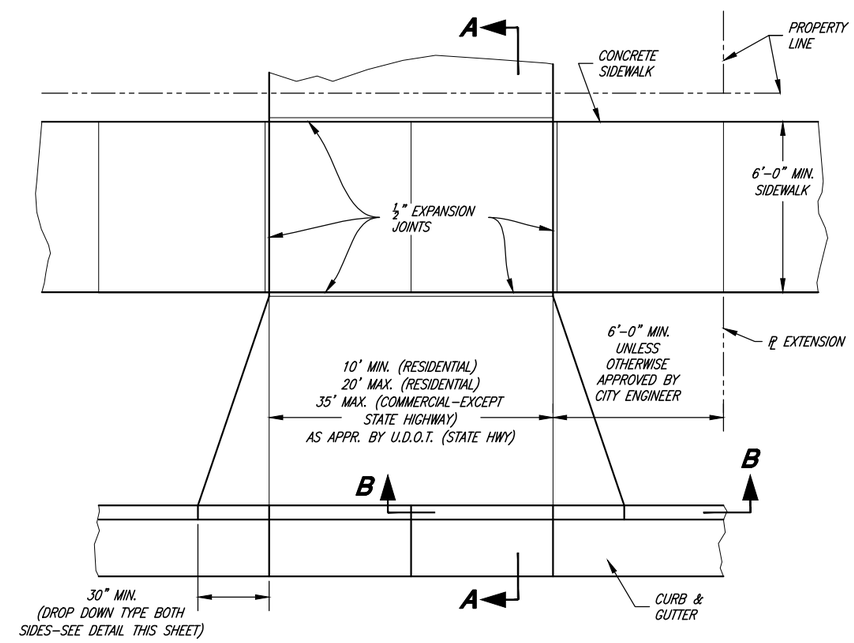

DRIVEWAY APPROACH W/ PARKSTRIP

DROP DOWN STYLE (CITY STANDARD)

REGISTERED PROFESSIONAL ENGINEER
BRANDON KENT JONES
No. 5148758
State of Utah

PROJECT ENGINEER
1/10/2023
DATE

REV.	DATE	APPR.

SCALE: N.T.S.

DESIGNED BKJ
DRAWN BEB
CHECKED BKJ

JONES & ASSOCIATES
CONSULTING ENGINEERS
6080 Fashion Point Drive
South Ogden, Utah 84403 (801) 476–9767
www.jonescivil.com

SOUTH WEBER city

SOUTH WEBER CITY CORPORATION
PUBLIC WORKS - ROAD IMPROVEMENT STANDARDS

TYPICAL DRIVE APPROACH DETAILS

SHEET: R5
OF 33 SHEETS
0

DETECTABLE WARNING SURFACE NOTES:

1. LOCATE THE DETECTABLE WARNING SURFACE SO THE OUTSIDE CORNER NEAREST THE STREET IS WITHIN 1 INCH OF THE BACK OF CURB (TBC). PROVIDE 2-FOOT MINIMUM DEPTH.
2. PROVIDE DETECTABLE WARNING SURFACE FOR FULL WIDTH OF CURB CUT.
3. THE DETECTABLE WARNING SURFACE DOMES SHALL BE ORIENTED SUCH THAT THE ROWS ARE PARALLEL WITH THE DIRECTION OF PEDESTRIAN TRAVEL TO THE RAMP ON THE OPPOSITE SIDE OF THE STREET.
4. THE STANDARD COLOR FOR THE DETECTABLE WARNING SURFACE SHALL BE YELLOW OR PRE-APPROVED CONTRASTING COLOR. WHEN THE EXISTING SIDEWALK COLOR IS NOT STANDARD CONCRETE, THE COLOR OF THE DETECTABLE WARNING SURFACE SHALL BE DETERMINED BY THE CITY ENGINEER OR AUTHORIZED REPRESENTATIVE.
5. WHEN A DETECTABLE WARNING SURFACE DOME IS CUT, THE REMAINING PORTION OF THE DOME SHALL BE BEVELED TO A MAXIMUM SLOPE OF 1:2.

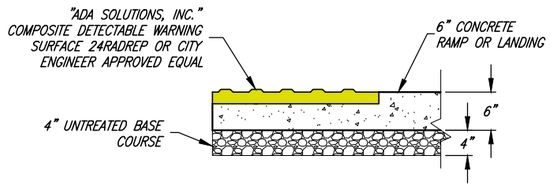

DETECTABLE WARNING SURFACE DETAIL

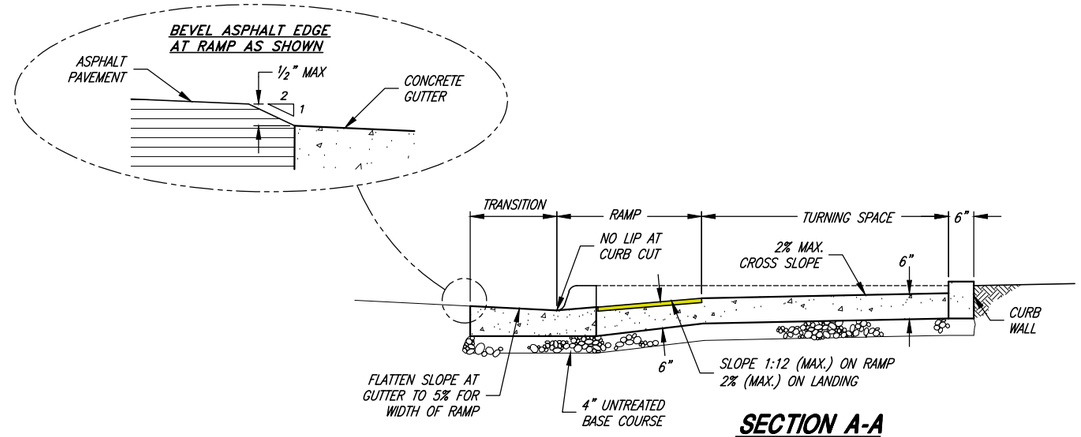

SECTION A-A

GENERAL NOTES:

A1. INSTALLATION TOLERANCES ON CURB & GUTTER AND SIDEWALK PER APWA 32 16 13, 3.7.

A2. AS-BUILT SURVEY MAY BE REQUIRED TO VERIFY COMPLIANCE WITH TOLERANCES.

A3. GRINDING OF CONCRETE, TO MEET TOLERANCES, WILL NOT BE ALLOWED.

ADA RAMP NOTES:

A. WHERE DESIGNATED BY THE CITY, ALTERNATE UDOT OR APWA RAMP DESIGNS MAY BE USED WITH THE PRIOR APPROVAL OF THE CITY ENGINEER AND THE CITY PUBLIC WORKS DEPARTMENT. SUBMIT ENGINEERED CONSTRUCTION PLANS TO CITY ENGINEER FOR REVIEW AND ACCEPTANCE PRIOR TO CONSTRUCTION.

B. SITE CONDITIONS WILL VARY. CONFIGURATION OF RAMP, LANDING, AND TRANSITION MAY BE CHANGED, BUT THEY MUST MEET DIMENSIONS AND SLOPES AS SHOWN IN THE MOST RECENT EDITION OF THE U.D.O.T. STANDARDS & SPECIFICATIONS (SHEETS PA1 THROUGH PA5). THE USE OF FLARES, CURB WALLS, ETC. ARE AT THE DISCRETION OF THE ENGINEER.

C. LOCATE CURB CUT WITHIN CROSSWALK.

D. RAMP GRADE BREAK MUST BE PERPENDICULAR TO THE RUNNING SLOPE.

SLOPE TABLE

	ITEM	MAX RUNNING SLOPE*	MAX. CROSS SLOPE*
T	TURNING SPACE [2]	2% (1V:48H)	2% (1V:48H)
R	RAMP	8.3% (1V:12H)	2% (1V:48H)
S	SIDEWALK	5% (1:20) [1]	2% (1V:48H)
F1	TRAVERSABLE SURFACE	10% (1V:10H)	--
F2	NON-TRAVERSABLE SURFACE	25% (1V:4H)	--
B	BLENDED TRANSITION	5% (1V:20H) 2% MIN.	2% (1V:48H)

* RUNNING SLOPE IS IN THE DIRECTION OF PEDESTRIAN TRAVEL. CROSS SLOPE IS PERPENDICULAR TO PEDESTRIAN TRAVEL.

[1] 5% MAX OR NATURAL SLOPE OF LAND

[2] NOT TO EXCEED 2% IN ANY DIRECTION

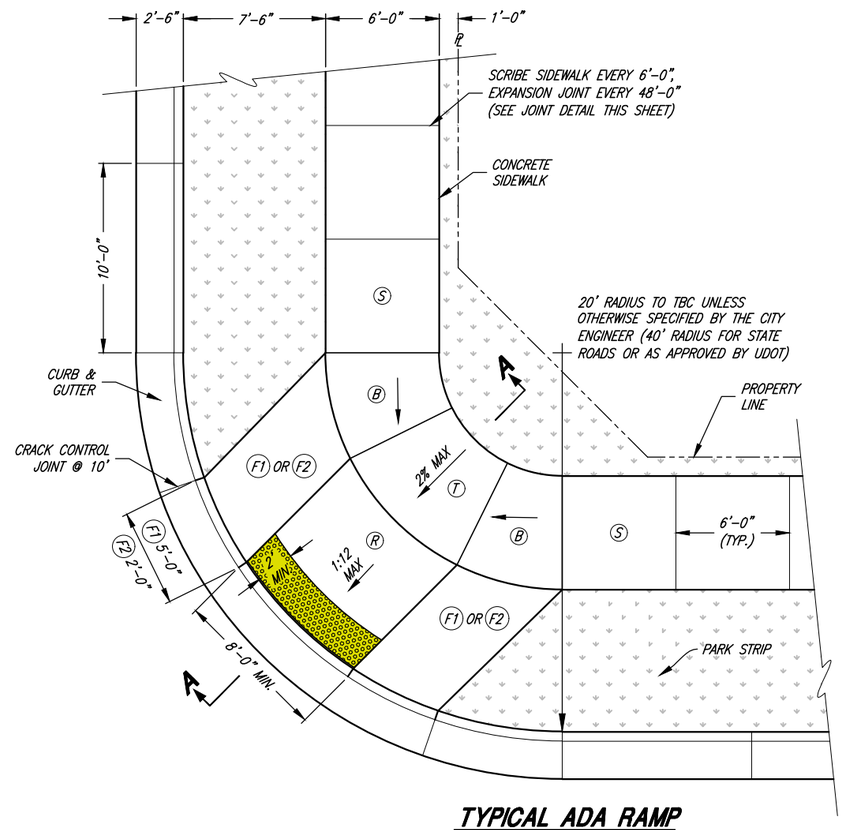

TYPICAL ADA RAMP

(WITH PARK STRIP)

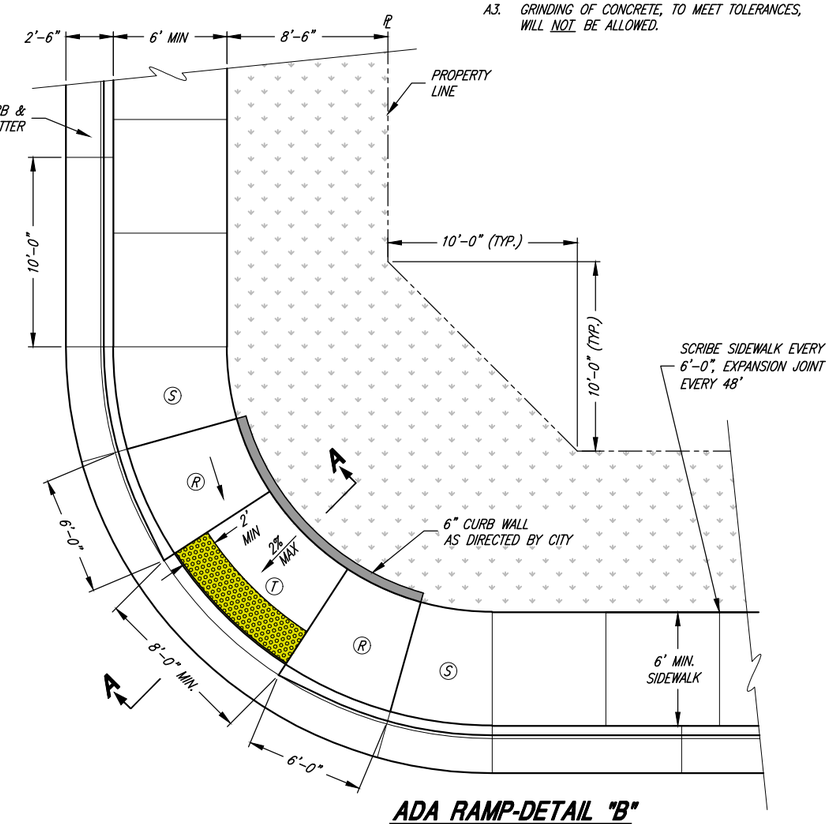

ADA RAMP-DETAIL "B"

(WITHOUT PARK STRIP)

REGISTERED PROFESSIONAL ENGINEER BRANDON KENT JONES No. 5148758 State of Utah

Brandon K. Jones
PROJECT ENGINEER
1/10/2023
DATE

REV.	DATE	APPR.

SCALE: N.T.S.

DESIGNED BKJ
DRAWN BEB
CHECKED BKJ

JONES & ASSOCIATES
CONSULTING ENGINEERS
6080 Fashion Point Drive
South Ogden, Utah 84403 (801) 476-9767
www.jonescivil.com

SOUTH WEBER city

SOUTH WEBER CITY CORPORATION
PUBLIC WORKS - ROAD IMPROVEMENT STANDARDS
TYPICAL ADA RAMP DETAILS

SHEET: R6 OF 33 SHEETS
0

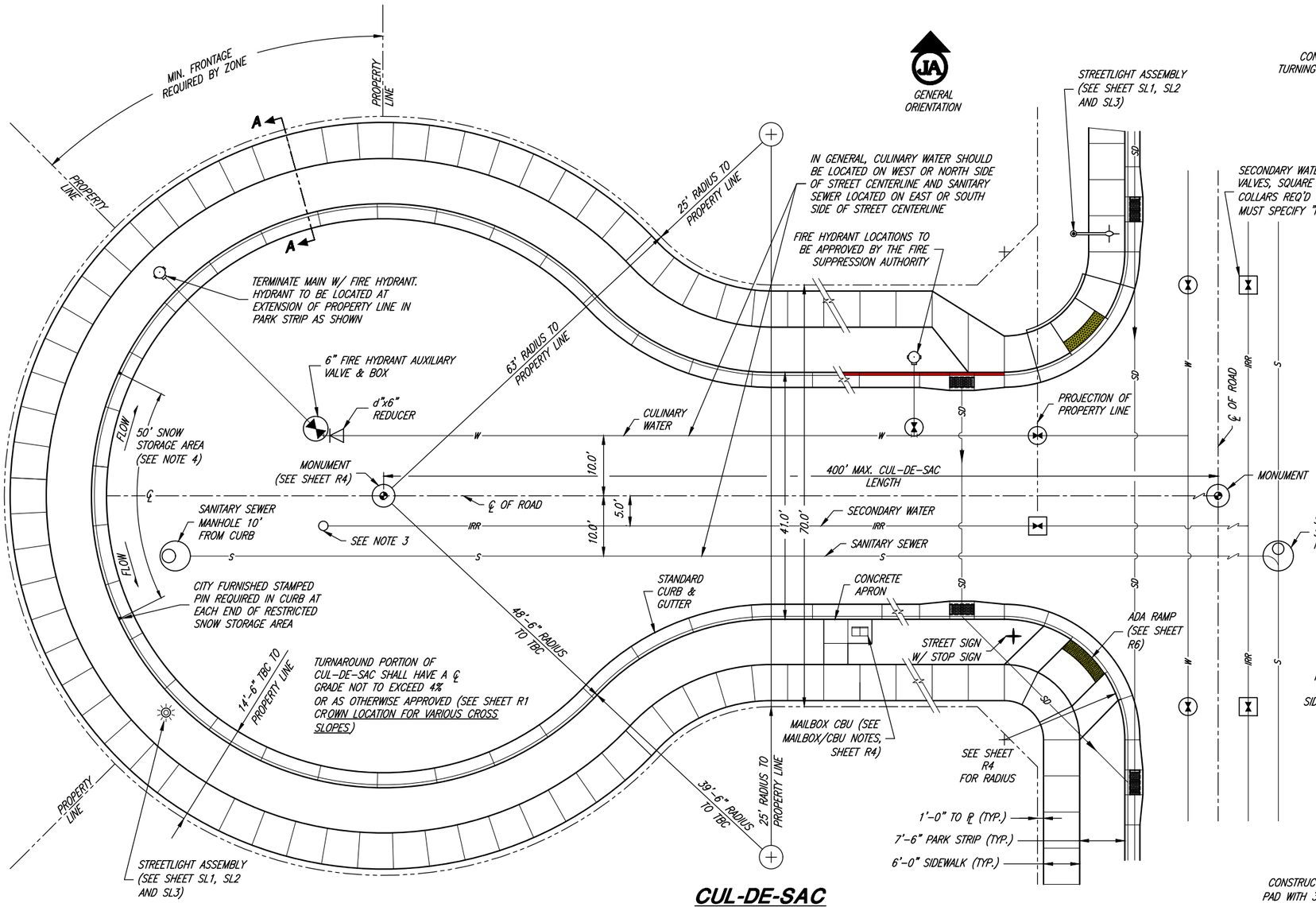

CUL-DE-SAC

70' RIGHT-OF-WAY

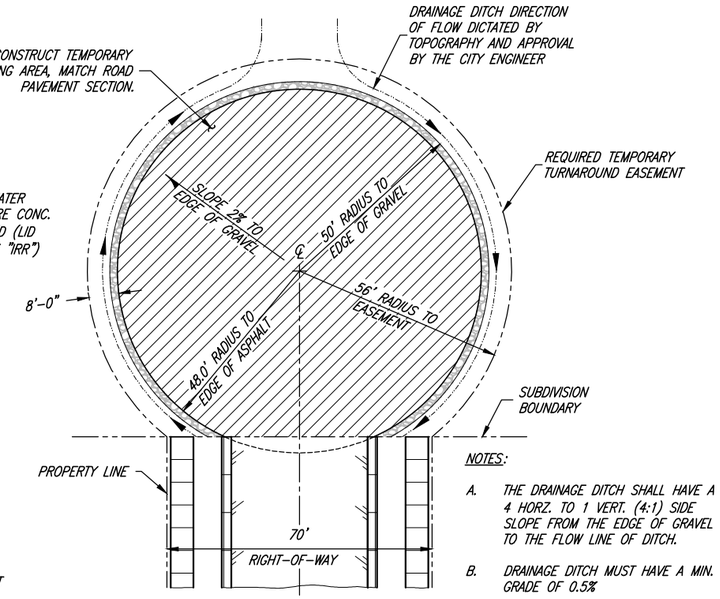

NOTES:

A. THE DRAINAGE DITCH SHALL HAVE A 4 HORZ. TO 1 VERT. (4:1) SIDE SLOPE FROM THE EDGE OF GRAVEL TO THE FLOW LINE OF DITCH.

B. DRAINAGE DITCH MUST HAVE A MIN. GRADE OF 0.5%

CITY STANDARD TEMPORARY TURNAROUND

(FOR OUTSIDE OF SUBDIVISION BOUNDARY AND TO BE MAINTAINED BY PROPERTY OR EASEMENT OWNER)

GENERAL NOTES:

1. THE CIRCULAR CUL-DE-SAC LAYOUT ON THIS SHEET IS TO BE CONSIDERED AS THE CITY STANDARD DESIGN. OTHER ALTERNATE DESIGNS MAY BE CONSIDERED AS APPROVED BY THE CITY ENGINEER.
2. MODIFIED CUL-DE-SACS (KNUCKLE, EYEBROW, BULB, OR HALF CUL-DE-SACS) ARE NOT PERMITTED.
3. DEVELOPER SHALL PROVIDE AN AIR RELIEF OR BLOW-OFF AS DETERMINED BY THE SECONDARY WATER PROVIDER AND IN ACCORDANCE WITH THEIR STANDARDS AND APPROVED BY THE CITY ENGINEER.
4. NO DRIVEWAYS, FIRE HYDRANTS, OR MAIL BOXES ARE PERMITTED WITHIN THE 50' SNOW STORAGE AREA.

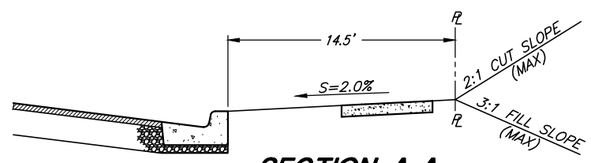

SECTION A-A

REQUIRED GRADING BETWEEN TBC AND PROPERTY LINE

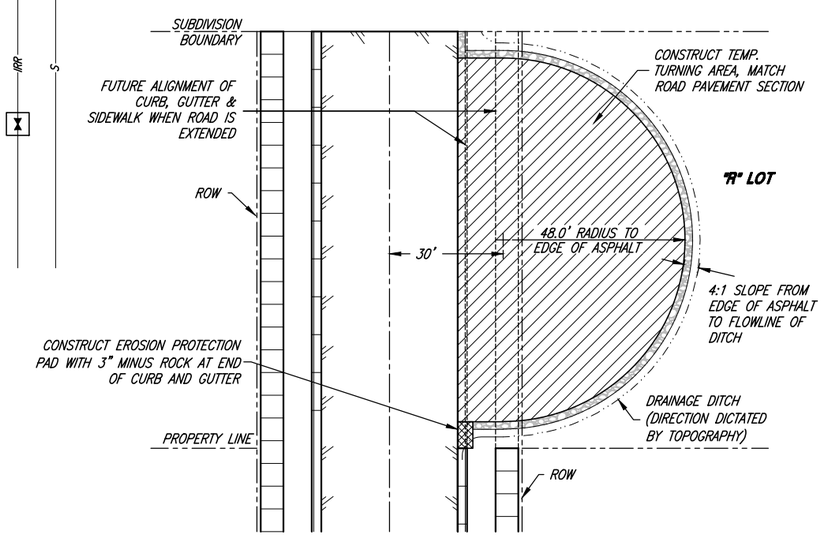

TEMPORARY TURNAROUND

(FOR INSIDE SUBDIVISION BOUNDARY TO BE MAINTAINED BY PROPERTY OWNER)

REGISTERED PROFESSIONAL ENGINEER — BRANDON KENT JONES No. 5148758 — State of Utah

PROJECT ENGINEER

1/10/2023

DATE

REV.	DATE	APPR.

SCALE: N.T.S.

DESIGNED BKJ
DRAWN BEB
CHECKED BKJ

JONES & ASSOCIATES — CONSULTING ENGINEERS
6080 Fashion Point Drive
South Ogden, Utah 84403 (801) 476-9767
www.jonescivil.com

SOUTH WEBER city

SOUTH WEBER CITY CORPORATION

PUBLIC WORKS - ROAD IMPROVEMENT STANDARDS

CUL-DE-SAC & TEMPORARY TURNAROUND DETAILS

SHEET: R7 OF 33 SHEETS

0

GENERAL NOTES:

1. THE CIRCULAR CUL-DE-SAC LAYOUT ON THIS SHEET IS TO BE CONSIDERED AS THE CITY STANDARD DESIGN FOR PRIVATE ROADS. OTHER ALTERNATE DESIGNS MAY BE CONSIDERED AS APPROVED BY THE CITY.
2. ALL CULINARY WATER MAINS AND SERVICES MUST MAINTAIN A MINIMUM SEPARATION FROM ALL SEWER MAINS AND LATERALS OF 10'-0" HORIZONTAL AND 18" VERTICAL IN ACCORDANCE WITH THE STATE OF UTAH DIVISION OF DRINKING WATER RULES SECTION R309-550-7
3. NATURAL GAS, POWER AND COMMUNICATION LINES SHALL BE LOCATED BEHIND PROPERTY LINES OR IN LOT EASEMENTS.
4. THE PRIVATE ROAD CROSS SECTION IS NOT PERMITTED ON THROUGH ROADS.
5. ALL PRIVATE ROADS SHALL TERMINATE WITH A TURNAROUND.

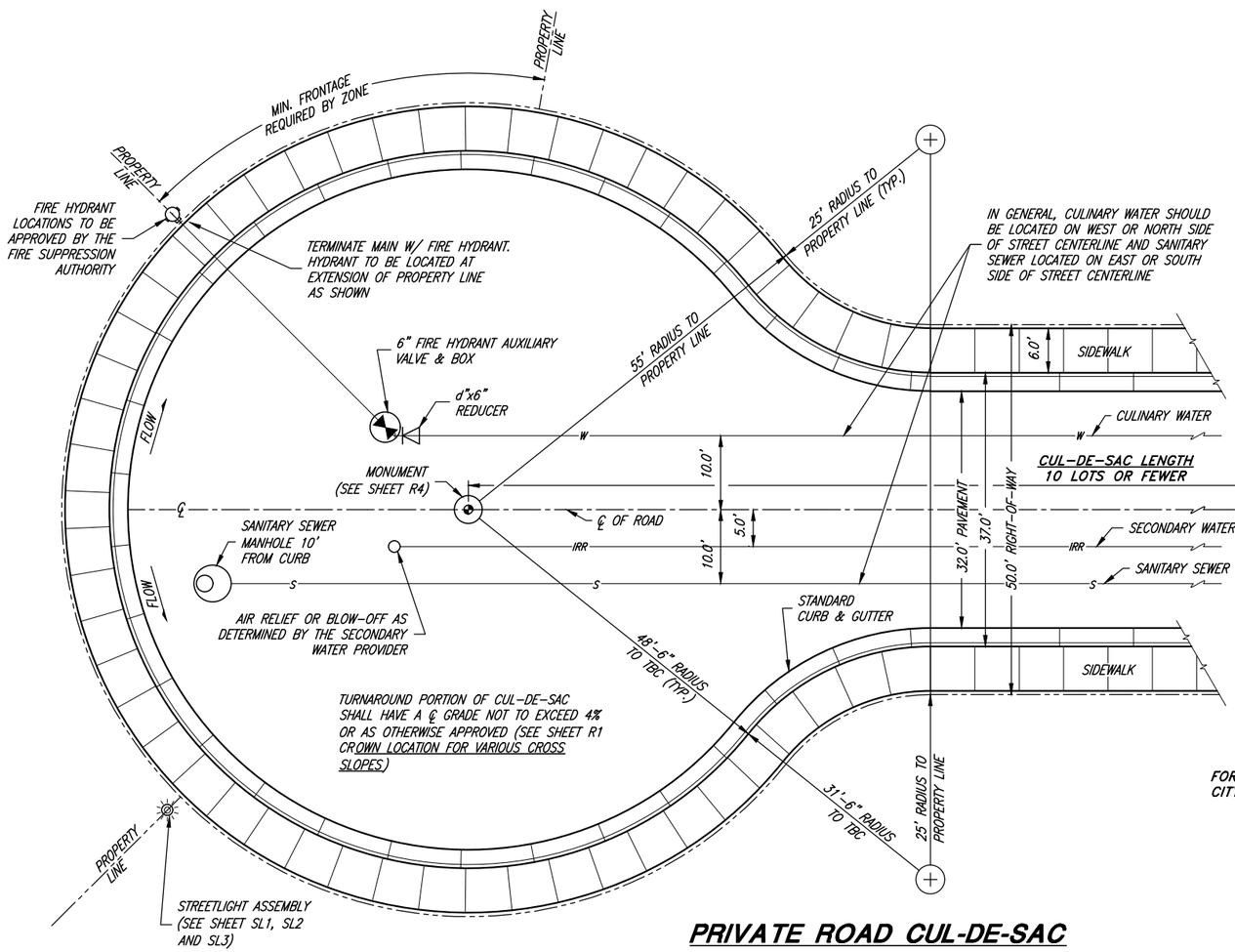

PRIVATE ROAD CUL-DE-SAC

50' RIGHT-OF-WAY

SEE SHEETS R4 AND R7 FOR CONNECTION TO CITY RIGHT-OF-WAY

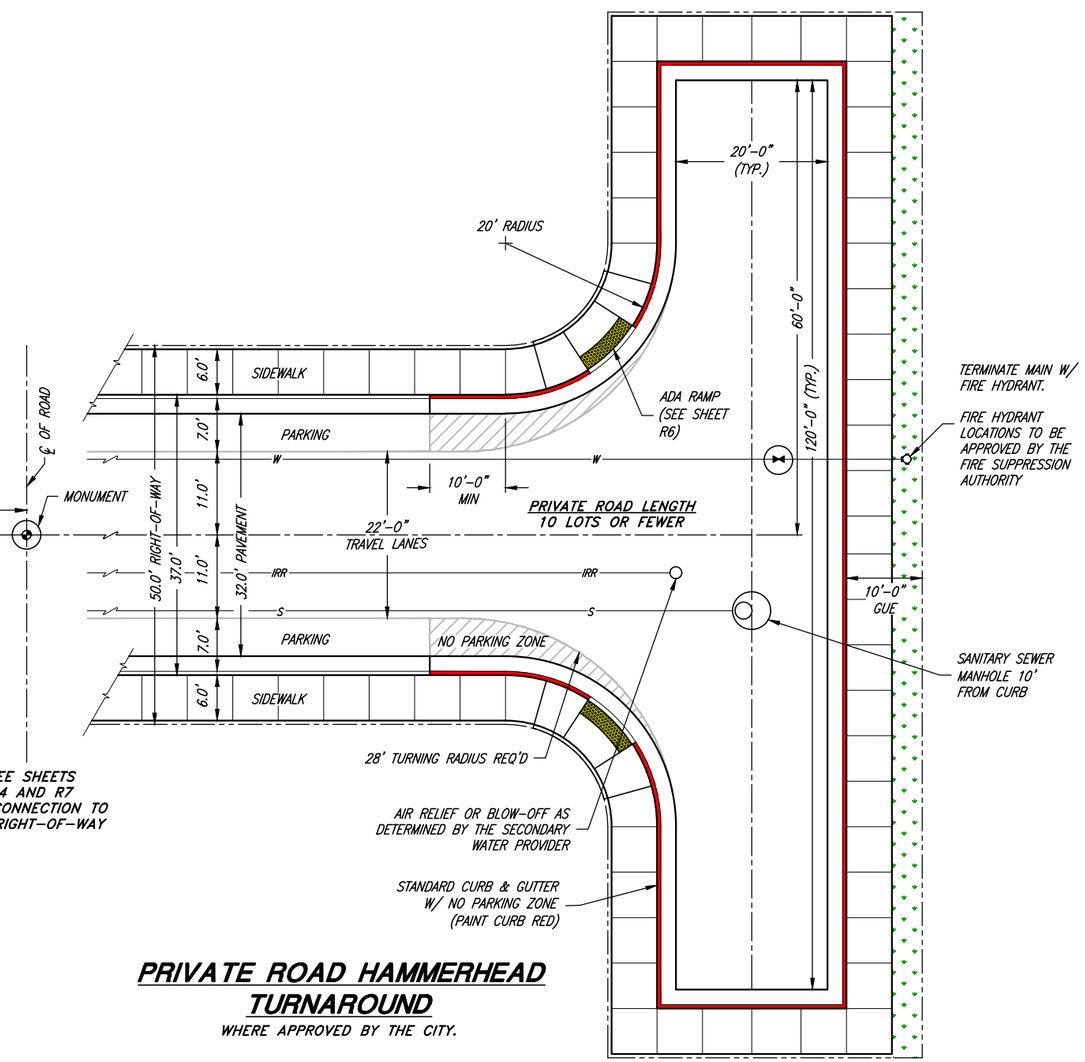

PRIVATE ROAD HAMMERHEAD TURNAROUND

WHERE APPROVED BY THE CITY.

REGISTERED PROFESSIONAL ENGINEER — BRANDON KENT JONES No. 5148758 — State of Utah

PROJECT ENGINEER: Brandon K. Jones

DATE: 1/10/2023

REV.	DATE	APPR.

SCALE: N.T.S.

DESIGNED BKJ
DRAWN BEB
CHECKED BKJ

JONES & ASSOCIATES — CONSULTING ENGINEERS
6080 Fashion Point Drive
South Ogden, Utah 84403 (801) 476-9767
www.jonescivil.com

SOUTH WEBER city

SOUTH WEBER CITY CORPORATION
PUBLIC WORKS - ROAD IMPROVEMENT STANDARDS
PRIVATE ROAD CUL-DE-SAC AND HAMMERHEAD TURNAROUND DETAILS

SHEET: R8 OF 33 SHEETS
0

STREET SIGN NOTES:

A. STREET SIGN BACKGROUND SHALL BE REGULATORY GREEN, BOTH STREET AND TRAFFIC SIGNS SHALL BE AT THE VERY LEAST HIGH INTENSITY REFLECTIVE SHEETING (9FP-85 TYPE IIIA)

B. LEGEND SHALL BE WHITE LETTERS (FONT: HIGHWAY C), HIGH INTENSITY REFLECTIVE SHEETING (9FP-85 IIIA)

C. SIGN BLANK SHALL BE 6081-T6 HEAT TREATED HIGH TENSILE DEGREASED ALUMINUM W/ ALODINE 1200 FINISH-THICKNESS SHALL BE 0.08"

D. EACH SIGN SHALL CONSIST OF TWO PLATES RIVETED TOGETHER & MOUNTED AS SHOWN

E. SIGNS ON PRIVATE ROADS SHALL MEET ALL SPECIFICATIONS FOR STANDARD SIGNS. (PRIVATE SIGNS WILL NOT BE MAINTAINED BY THE CITY.)

F. ALL STREETS WITH NAMES MUST ALSO SHOW COORDINATE DESIGNATION

G. ALL SIGNS SHALL CONFORM TO THE REQUIREMENTS OF THE CURRENT "MANUAL ON UNIFORM TRAFFIC CONTROL DEVICES"

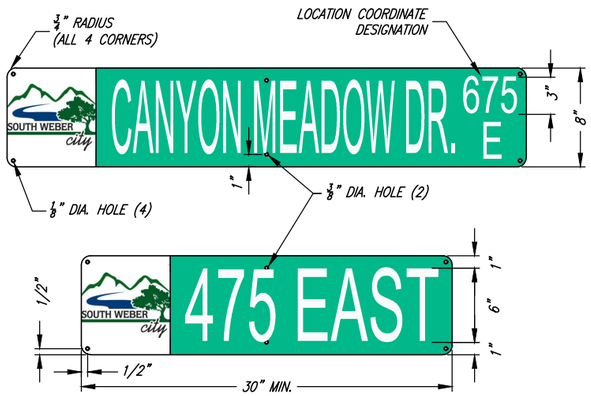

CITY STANDARD PLATE DETAIL

PRIVATE ROAD PLATE DETAIL

(SEE STREET SIGN NOTE E THIS SHEET)

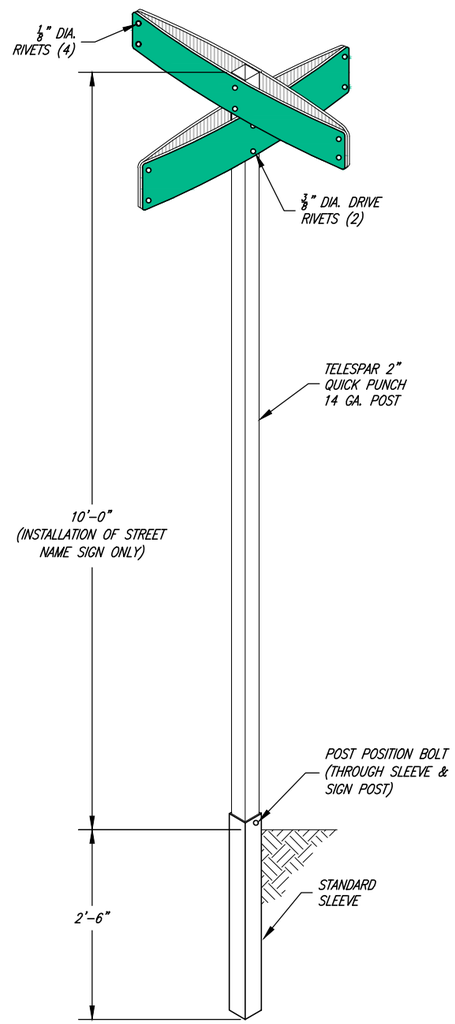

STREET SIGN & POST

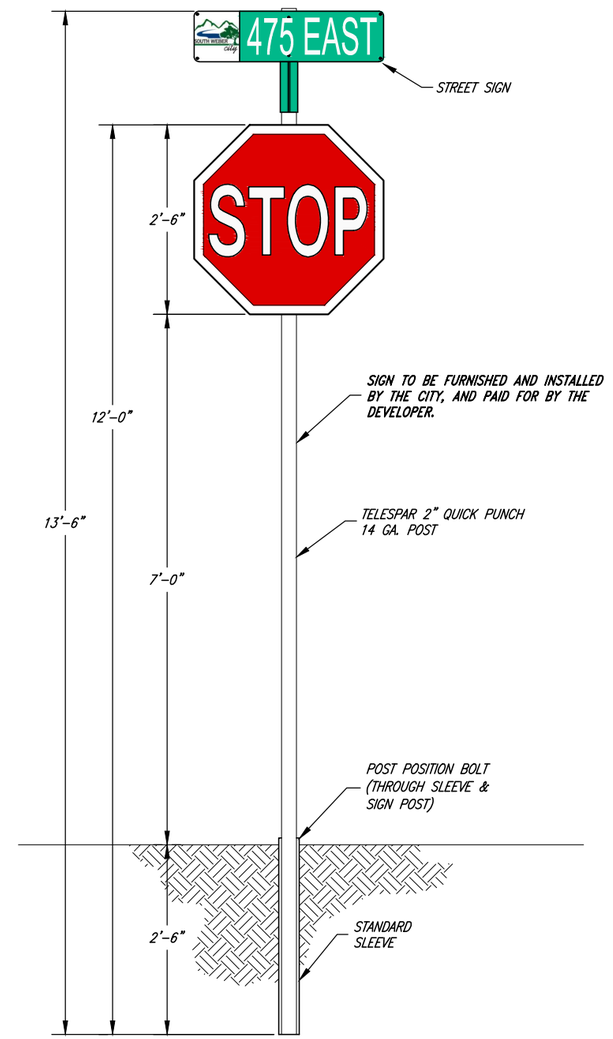

STREET / TRAFFIC SIGN & POST

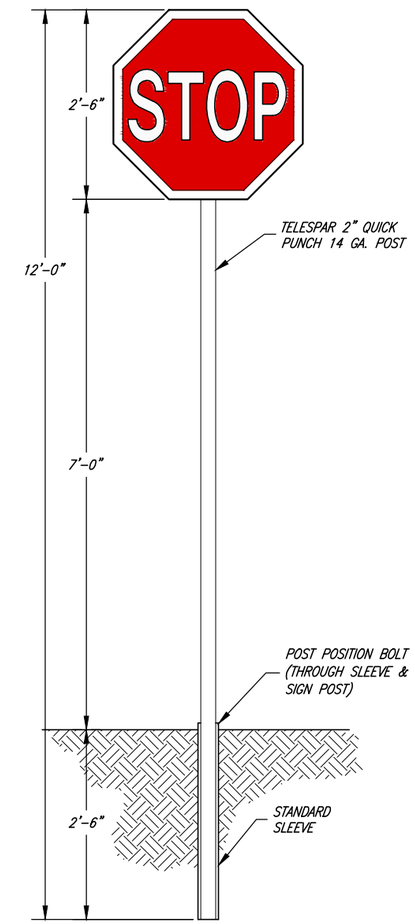

TRAFFIC SIGN & POST

REGISTERED PROFESSIONAL ENGINEER BRANDON KENT JONES No. 5148758 State of Utah

PROJECT ENGINEER 1/10/2023 DATE

REV.	DATE	APPR.

SCALE: N.T.S.

DESIGNED BKJ
DRAWN BEB
CHECKED BKJ

JONES & ASSOCIATES CONSULTING ENGINEERS
6080 Fashion Point Drive
South Ogden, Utah 84403 (801) 476-9767
www.jonescivil.com

SOUTH WEBER city

SOUTH WEBER CITY CORPORATION
PUBLIC WORKS - ROAD IMPROVEMENT STANDARDS
STREET SIGN DETAILS

SHEET: R9 OF 33 SHEETS 0

CONCRETE COLLAR NOTES:

B1. ALL CONCRETE COLLARS TO BE INSTALLED WITHIN 14 DAYS AFTER PAVING.

B2. COLLARS AROUND MANHOLES AND CULINARY WATER VALVES ARE TO BE ROUND.

B3. COLLARS AROUND IRRIGATION VALVES AND MANHOLES ARE TO BE SQUARE.

B4. FIBER MESH SHALL BE ADDED TO ALL CONCRETE (1 lb PER CUBIC YARD).

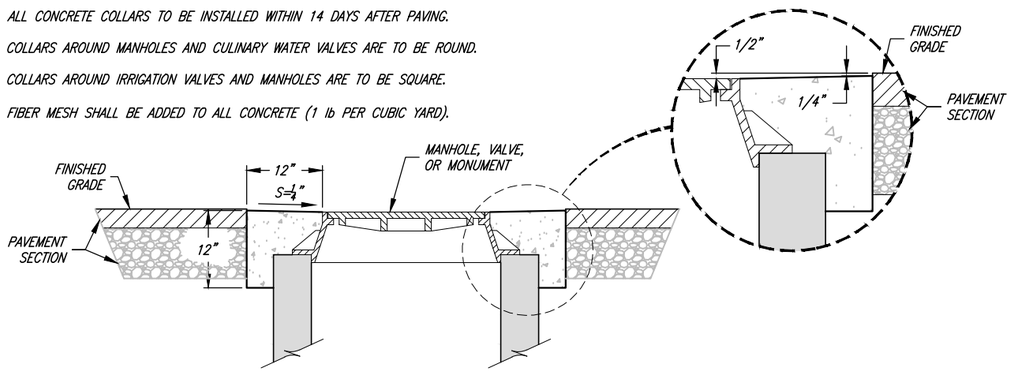

CONCRETE COLLAR DETAIL

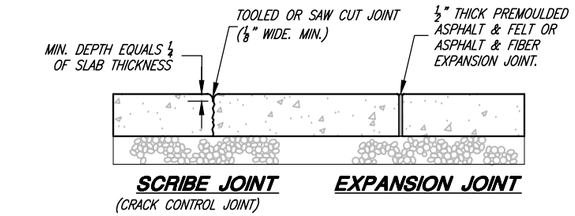

JOINT DETAIL

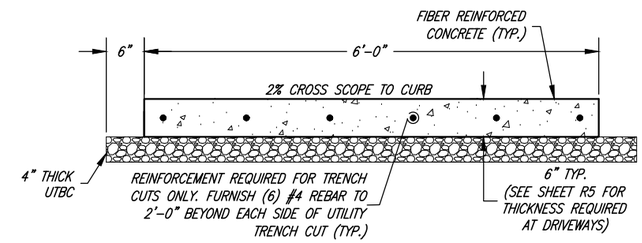

SIDEWALK SECTION

(CITY STANDARD)

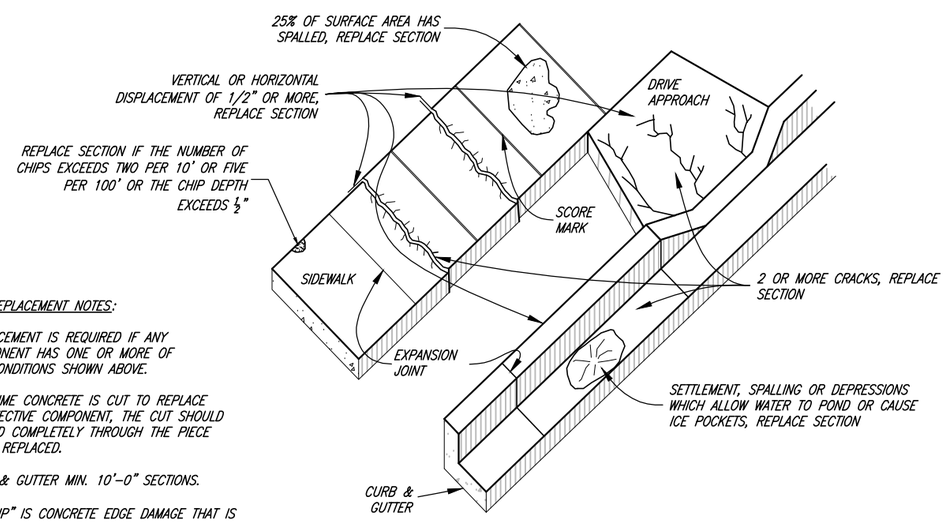

CONCRETE REPLACEMENT NOTES:

A. REPLACEMENT IS REQUIRED IF ANY COMPONENT HAS ONE OR MORE OF THE CONDITIONS SHOWN ABOVE.

B. ANY TIME CONCRETE IS CUT TO REPLACE A DEFECTIVE COMPONENT, THE CUT SHOULD EXTEND COMPLETELY THROUGH THE PIECE BEING REPLACED.

C. CURB & GUTTER MIN. 10'-0" SECTIONS.

D. A "CHIP" IS CONCRETE EDGE DAMAGE THAT IS DEEPER THAN 1/4" AND LARGER THAN 2" DIA.

DEFECTIVE CONCRETE REPLACEMENT CRITERIA

GENERAL NOTES:

A1. INSTALLATION TOLERANCES ON CURB & GUTTER AND SIDEWALK PER APWA 32 16 13, 3.7.

A2. AS-BUILT SURVEY MAY BE REQUIRED TO VERIFY COMPLIANCE WITH TOLERANCES.

A3. GRINDING OF CONCRETE, TO MEET TOLERANCES, WILL NOT BE ALLOWED.

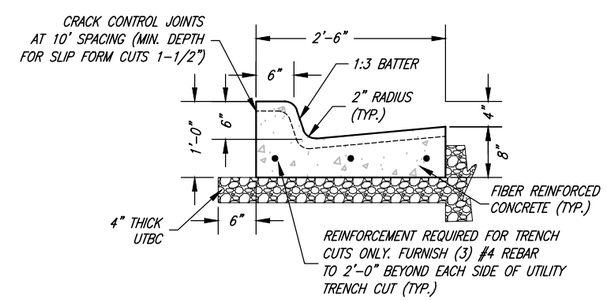

CURB & GUTTER SECTION

(CITY STANDARD)

CURB & GUTTER NOTES:

1. WHEN REPLACING CURB DUE TO CONSTRUCTION ACTIVITY, NEW CURB MUST EXTEND 5' MIN. PAST TRENCH ON EACH SIDE.

2. CONCRETE CURB TO BE CONSTRUCTED USING SLIPFORMS, HAND FORMED OR STATIONARY FORMS ARE ONLY ALLOWED FOR CURB TIE-INS.

3. THE SLOPE FOR CURB & GUTTER MUST BE A MINIMUM OF 0.5%.

REGISTERED PROFESSIONAL ENGINEER
BRANDON KENT JONES
No. 5148758
State of Utah

PROJECT ENGINEER
1/10/2023
DATE

REV.	DATE	APPR.

SCALE: N.T.S.

DESIGNED BKJ
DRAWN BEB
CHECKED BKJ

JONES & ASSOCIATES
CONSULTING ENGINEERS
6080 Fashion Point Drive
South Ogden, Utah 84403 (801) 476-9767
www.jonescivil.com

SOUTH WEBER city

SOUTH WEBER CITY CORPORATION
PUBLIC WORKS - ROAD IMPROVEMENT STANDARDS
TYPICAL SIDEWALK, CURB & GUTTER, CONCRETE COLLAR, AND DEFECTIVE CONC. REPLACEMENT DETAILS

SHEET: R10
OF 33 SHEETS
0

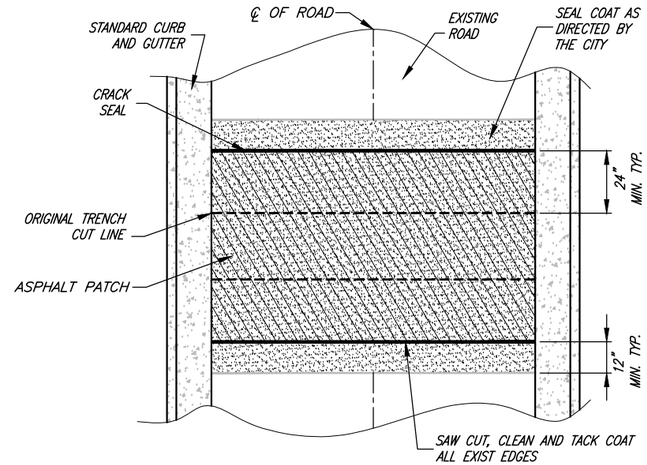

TYPICAL HORIZONTAL ASPHALT PATCH PLAN

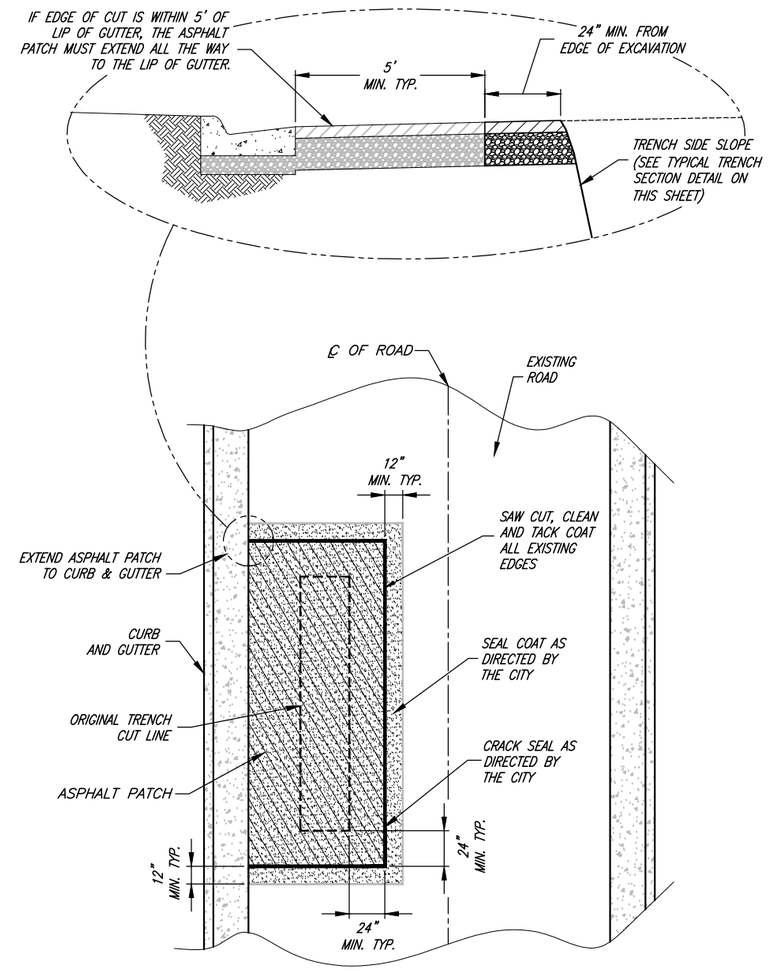

TYPICAL PARALLEL ASPHALT PATCH PLAN

ASPHALT PATCH NOTE:

1. ON ANY ROAD PAVED OR OVERLAYED WITHIN THE LAST 10 YEARS, THE PATCH MUST BE COMPLETED PER APWA PLAN 255 BITUMINOUS PAVEMENT T-PATCH. (SEE SHEET R12)

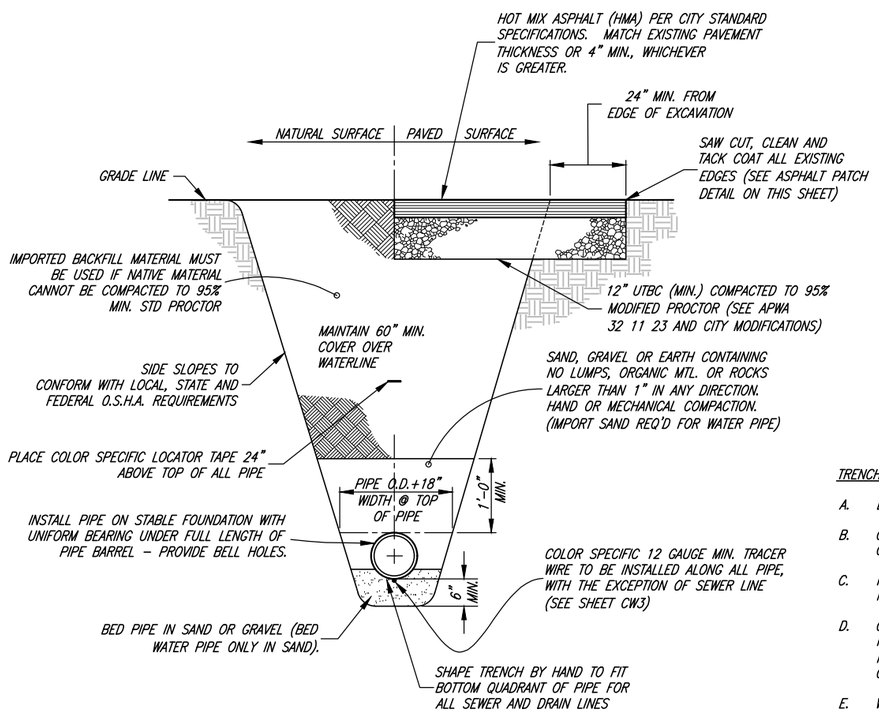

TYPICAL TRENCH SECTION

(WATER, IRRIGATION, SEWER, STORM DRAIN, AND LAND DRAIN)

TRENCH NOTES:

A. BACKFILL PER APWA 33 05 20 AND CITY MODIFICATIONS.

B. COMPACTION TEST REQUIRED AT SPRING-LINE FOR ALL P.V.C. OR H.D.P.E. PIPES.

C. PAVEMENT RESTORATION PER APWA 33 05 25 AND CITY MODIFICATIONS.

D. GRAVEL SURFACED AREAS, SUCH AS ROADS AND SHOULDERS, PARKING AREAS, AND UNPAVED DRIVEWAYS, SHALL BE REPAIRED WITH 8" THICK (MIN.) 1" UNTREATED BASE COURSE COMPACTED TO 95% MODIFIED PROCTOR.

E. WATER & SEWER LINES, INCLUDING SERVICE LINES, SHALL NOT BE INSTALLED IN THE SAME TRENCH.

REGISTERED PROFESSIONAL ENGINEER BRANDON KENT JONES No. 5148758 State of Utah

PROJECT ENGINEER

1/10/2023

DATE

REV.	DATE	APPR.

SCALE: N.T.S.

DESIGNED BKJ
DRAWN BEB
CHECKED BKJ

JONES & ASSOCIATES CONSULTING ENGINEERS
6080 Fashion Point Drive
South Ogden, Utah 84403 (801) 476-9767
www.jonescivil.com

SOUTH WEBER city

SOUTH WEBER CITY CORPORATION
PUBLIC WORKS - ROAD IMPROVEMENT STANDARDS

UTILITY TRENCH AND ASPHALT PATCH PLAN DETAILS

SHEET: R11 OF 33 SHEETS
0

BITUMINOUS PAVEMENT T-PATCH NOTES:

1. GENERAL:

A. VERTICAL CUTS IN BITUMINOUS PAVEMENT MAY BE DONE BY SAW OR PAVEMENT ZIPPING. IF CUTS GREATER THAN 6 INCHES ARE NECESSARY TO PREVENT PAVEMENT "BREAK OFF" CONSULT CITY ENGINEER FOR DIRECTION ON HANDLING ADDITIONAL COSTS.

B. REPAIR A T-PATCH RESTORATION IF ANY OF THE FOLLOWING CONDITIONS OCCUR PRIOR TO FINAL PAYMENT OR AT THE END OF THE ONE YEAR CORRECTION PERIOD:

1) PAVEMENT SURFACE DISTORTION EXCEEDS 1/4-INCH DEVIATION IN 10 FEET.
REPAIR OPTION - PLANE OFF SURFACE DISTORTIONS. COAT PLANED SURFACE WITH A CATIONIC OR ANIONIC MULSION THAT COMPLIES WITH APWA SECTION 32 12 03.

2) SEPARATION APPEARS AT A CONNECTION TO AN EXITING PAVEMENT OR ANY STREET FIXTURE.
REPAIR OPTION - BLOW SEPARATION CLEAN AND APPLY JOINT SEALANT, PLAN 265.

3) CRACKS AT LEAST 1-FOOT LONG AND 1/4-INCH WIDE OCCUR MORE OFTEN THAN 1 IN 10 SQUARE FEET.
REPAIR OPTION - BLOW CLEAN AND APPLY CRACK SEAL, PLAN 265.

4) PAVEMENT RAVELING IS GREATER THAN 1 SQUARE FOOT PER 100 SQUARE FEET.
REPAIR OPTION - MILL AND INLAY, APWA SECTIONS 32 01 16.71 AND 32 12 05.

2. PRODUCTS:

A. BASE COURSE: UNTREATED BASE COURSE, APWA SECTION 32 11 23. DO NOT USE GRAVEL AS A BASE COURSE WITHOUT ENGINEER'S PERMISSION.

B. FLOWABLE FILL: TARGET IS 60 PSI IN 28 DAYS WITH 90 PSI MAXIMUM IN 28 DAYS, APWA SECTION 31 05 15. IT MUST FLOW EASILY REQUIRING NO VIBRATION FOR CONSOLIDATION.

C. REINFORCEMENT: NO. 5 GALVANIZED OR EPOXY COATED, DEFORMED, 60 KSI YIELD GRADE STEEL, ASTM A615.

D. CONCRETE: CLASS 4000, APWA SECTION 03 30 04.

E. TACK COAT: APWA SECTION 32 12 05.

F. BITUMINOUS CONCRETE: APWA SECTION 32 12 05.

1) WARM WEATHER PATCH: PG64-22-DM-1/2, UNLESS INDICATED OTHERWISE.

2) COLD WEATHER PATCH: MODIFIED MC-250-FM-1 AS INDICATED IN APWA SECTION 33 05 25.

3. EXECUTION:

A. BASE COURSE PLACEMENT: APWA SECTION 32 05 10. MAXIMUM LIFT THICKNESS BEFORE COMPACTION IS 8-INCHES WHEN USING RIDING EQUIPMENT OR 6-INCHES WHEN USING HAND HELD EQUIPMENT. COMPACTION IS 95 PERCENT OR GREATER RELATIVE TO A MODIFIED PROCTOR DENSITY, APWA SECTION 31 23 26.

B. FLOWABLE FILL: CURE TO INITIAL SET BEFORE PLACING AGGREGATE BASE OR BITUMINOUS PAVEMENT. USE IN EXCAVATIONS THAT ARE TOO NARROW TO RECEIVE COMPACTION EQUIPMENT.

C. TACK COAT: CLEAN ALL HORIZONTAL AND VERTICAL SURFACES. APPLY FULL COVERAGE ALL SURFACES.

D. PAVEMENT PLACEMENT: FOLLOW APWA SECTION 32 12 16.13. UNLESS INDICATED OTHERWISE, LIFT THICKNESS IS 3-INCHES MINIMUM AFTER COMPACTION. COMPACT TO 94 PERCENT OF ASTM D2041 (RICE DENSITY) PLUS OR MINUS 2 PERCENT.

E. BITUMINOUS CONCRETE SUBSTITUTION: IF BITUMINOUS CONCRETE IS SUBSTITUTED FOR PORTLAND CEMENT CONCRETE SUBSTRATE, OMIT REBAR AND PROVIDE 1.25 INCHES OF BITUMINOUS CONCRETE FOR EACH 1 INCH OF PORTLAND CEMENT CONCRETE. FOLLOW PARAGRAPH E REQUIREMENTS.

F. REINFORCEMENT: REQUIRED IF THICKNESS OF EXISTING PORTLAND-CEMENT CONCRETE SUBSTRATE IS 6-INCHES OR GREATER. NOT REQUIRED IF:

1) LESS THAN 6-INCHES THICK,

2) IF EXISTING CONCRETE IS DETERIORATING,

3) IF EXCAVATION IS LESS THAN 3 FEET SQUARE, OR

4) IF BITUMINOUS PAVEMENT IS SUBSTITUTED FOR PORTLAND-CEMENT CONCRETE SUBSTRATE.

G. CONCRETE SUBSTRATE: CURE TO INITIAL SET BEFORE PLACING NEW BITUMINOUS CONCRETE PATCH.

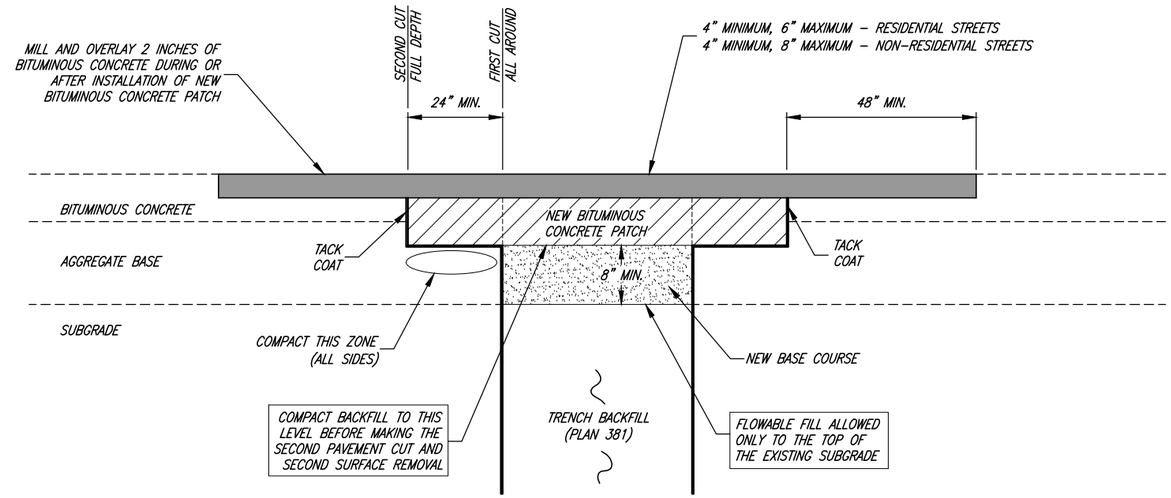

BITUMINOUS CONCRETE RESTORATION

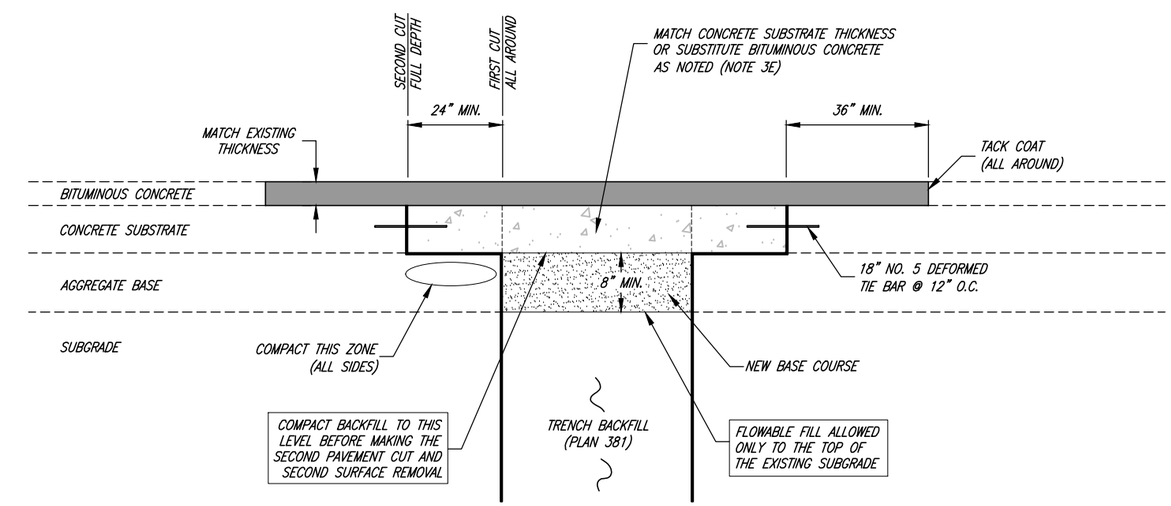

COMPOSITE RESTORATION

AMERICAN PUBLIC WORKS ASSOCIATION APWA Utah Chapter

Bituminous pavement T-patch

Plan **255**
November 2015

REGISTERED PROFESSIONAL ENGINEER BRANDON KENT JONES No. 5148758 State of Utah

PROJECT ENGINEER
1/10/2023
DATE

REV.	DATE	APPR.

SCALE: N.T.S.

DESIGNED BKJ
DRAWN BEB
CHECKED BKJ

JONES & ASSOCIATES
CONSULTING ENGINEERS
6080 Fashion Point Drive
South Ogden, Utah 84403 (801) 476-9767
www.jonescivil.com

SOUTH WEBER city

SOUTH WEBER CITY CORPORATION
PUBLIC WORKS - ROAD IMPROVEMENT STANDARDS
APWA PLAN 255 BITUMINOUS PAVEMENT T-PATCH

SHEET: R12 OF 33 SHEETS
0

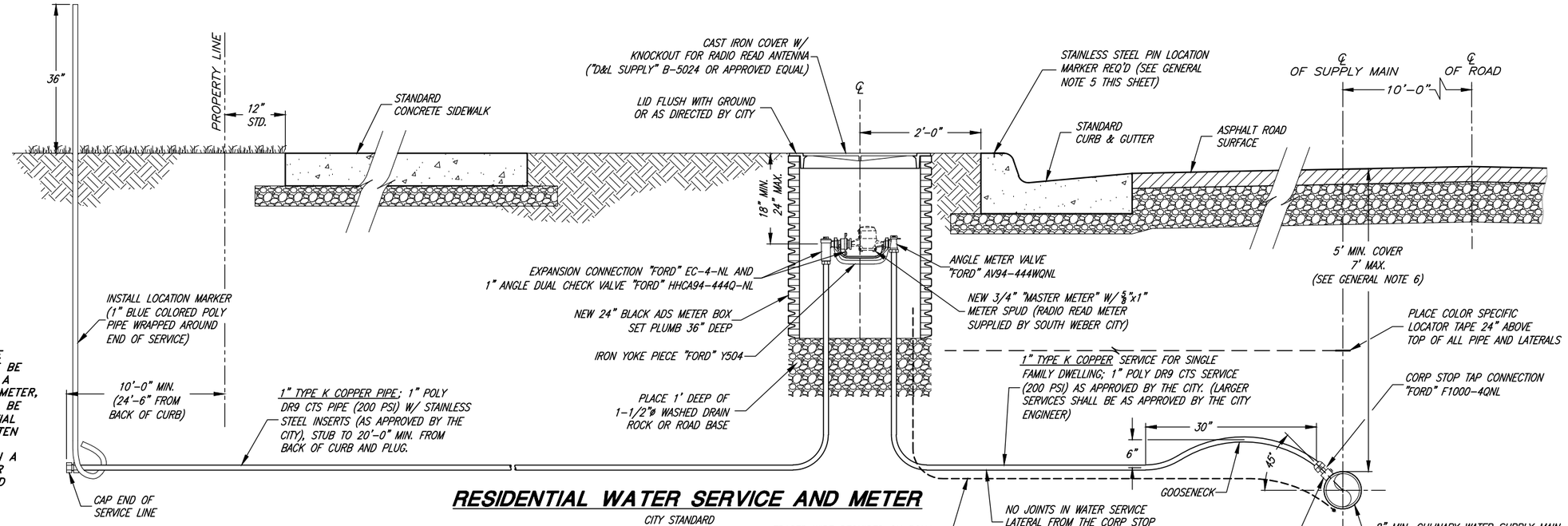

METER LOCATION NOTE:
**ALL CULINARY WATER METERS SHALL BE CENTERED ON THE LOT AND SHOULD NOT BE LOCATED WITHIN THE DRIVEWAY AREA. IF A DRIVEWAY IS PLACED OVER AN EXISTING METER, THE "ENTIRE" SERVICE AND METER SHALL BE RELOCATED OR A HIGH TRAFFIC RESIDENTIAL METER PIT MAY BE INSTALLED WITH WRITTEN APPROVAL FROM THE WATER SYSTEM SUPERINTENDENT. THIS IS DETERMINED ON A CASE BY CASE BASIS BY THE CITY WATER SYSTEM SUPERINTENDENT AND TO BE PAID FOR BY THE OWNER.

RESIDENTIAL WATER SERVICE AND METER

CITY STANDARD

C900 – CITY STANDARD (UNLESS OTHERWISE SPECIFIED)
BLUE COLOR PIPE W/ BLUE 12 GAUGE TRACER WIRE.
8"–12" MAINS SHALL BE C900 DR-18
14" OR LARGER MAINS SHALL BE C900 DR-18

DUCTILE IRON PIPE IS ALSO ALLOWED BY THE CITY – POLYWRAP ALL D.I.. WATERLINES
8"–12" MAINS SHALL BE CLASS 51.
14" OR LARGER MAINS SHALL BE CLASS 250 psi

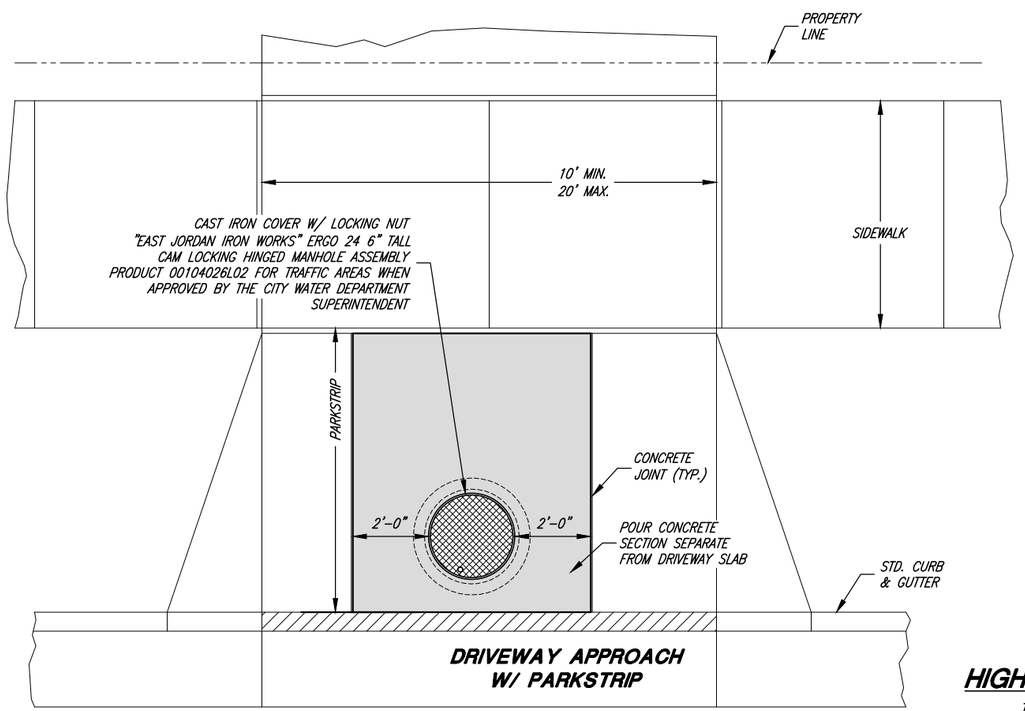

DRIVEWAY APPROACH W/ PARKSTRIP

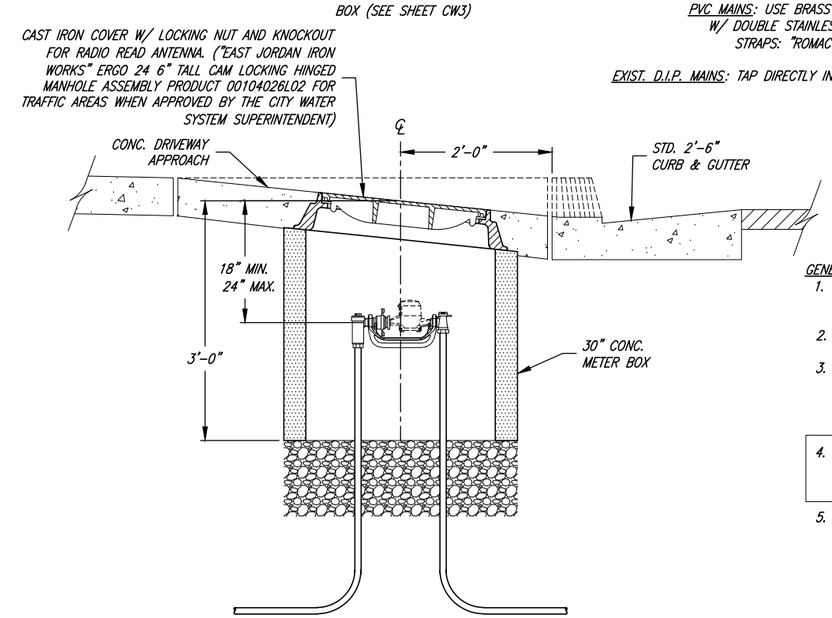

HIGH TRAFFIC RESIDENTIAL METER PIT DETAIL

THE USE OF A HIGH TRAFFIC RESIDENTIAL SERVICE METER PIT IS SITE SPECIFIC AND REQUIRES WRITTEN APPROVAL FROM THE WATER SYSTEM SUPERINTENDENT PRIOR TO INSTALLATION

GENERAL NOTES:

1. ALL FITTINGS SHALL BE "MUELLER" COMPRESSION TYPE UNLESS OTHERWISE NOTED.
2. "BLUE" BOLTS AND NUTS ARE REQUIRED BY THE CITY.
3. ALL SUPPLIES, LABOR, MACHINERY, ETC. WILL BE SUPPLIED BY THE CONTRACTOR. SOUTH WEBER CITY WILL SUPPLY AND SET THE METER ONLY ON 1" CONNECTIONS. THE CONTRACTOR SHALL SUPPLY METERS FOR CONNECTIONS GREATER THAN 1" (SEE SHEET CW4).
4. ALL SPECIFIED BRANDS OF MATERIALS SHOWN ON THESE DRAWINGS ARE "CITY STANDARDS." OTHER EQUIVALENT BRANDS MAY BE USED WITH THE PRIOR APPROVAL OF THE CITY ENGINEER AND THE CITY WATER SYSTEM SUPERINTENDENT.
5. STAMPED STAINLESS STEEL PINS USED FOR LATERAL LOCATING ARE REQUIRED BY THE CITY. BLANK S.S. PINS SHALL BE PROVIDED BY THE CITY AND INSTALLED AND STAMPED BY THE CONTRACTOR DURING ALL NEW CONSTRUCTION OR RESTORED WHEN REPLACING DAMAGED CURB & GUTTER DUE TO ANY CONSTRUCTION RELATED ACTIVITY. S.S. PINS SHALL BE STAMPED "S" FOR SANITARY SEWER, "W" FOR CULINARY WATER, AND "L" FOR LAND DRAIN.
6. ALL CULINARY WATER MAINS AND SERVICES MUST MAINTAIN A MINIMUM SEPARATION ABOVE ALL SEWER MAINS AND LATERALS OF 18" VERTICAL AND 10'-0" HORIZONTAL IN ACCORDANCE WITH THE STATE OF UTAH DIVISION OF DRINKING WATER (DDW) RULES SECTION R309-550-7. EXCEPTIONS MUST BE APPROVED BY DDW.

REGISTERED PROFESSIONAL ENGINEER
BRANDON KENT JONES
No. 5148758
State of Utah

PROJECT ENGINEER
1/10/2023
DATE

REV.	DATE	APPR.

SCALE: N.T.S.

DESIGNED BKJ
DRAWN BEB
CHECKED BKJ

JONES & ASSOCIATES
CONSULTING ENGINEERS
6080 Fashion Point Drive
South Ogden, Utah 84403 (801) 476-9767
www.jonescivil.com

SOUTH WEBER city

SOUTH WEBER CITY CORPORATION
PUBLIC WORKS - CULINARY WATER SYSTEM STANDARDS
RESIDENTIAL WATER SERVICE CONNECTION DETAILS

SHEET: CW1
OF 33 SHEETS
0

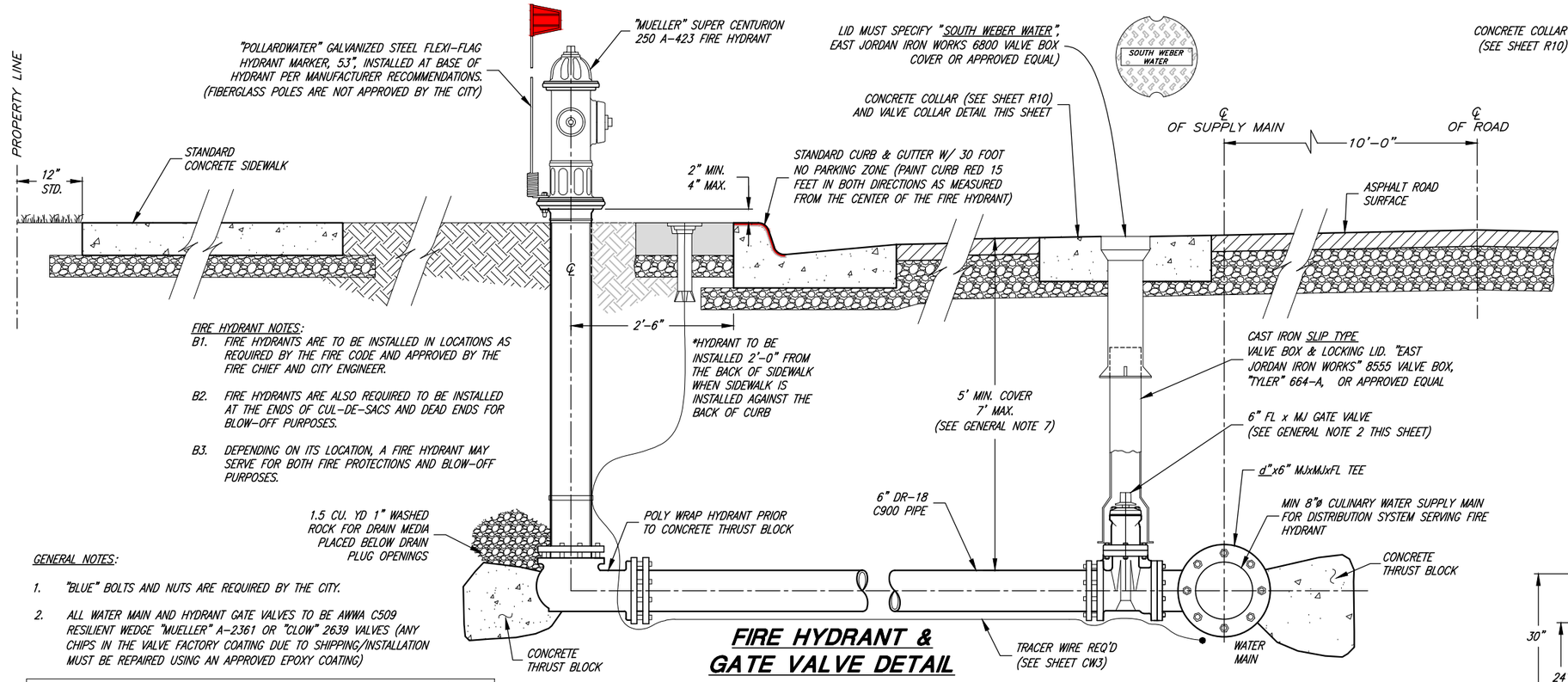

FIRE HYDRANT & GATE VALVE DETAIL

FIRE HYDRANT NOTES:

B1. FIRE HYDRANTS ARE TO BE INSTALLED IN LOCATIONS AS REQUIRED BY THE FIRE CODE AND APPROVED BY THE FIRE CHIEF AND CITY ENGINEER.

B2. FIRE HYDRANTS ARE ALSO REQUIRED TO BE INSTALLED AT THE ENDS OF CUL-DE-SACS AND DEAD ENDS FOR BLOW-OFF PURPOSES.

B3. DEPENDING ON ITS LOCATION, A FIRE HYDRANT MAY SERVE FOR BOTH FIRE PROTECTIONS AND BLOW-OFF PURPOSES.

GENERAL NOTES:

1. "BLUE" BOLTS AND NUTS ARE REQUIRED BY THE CITY.
2. ALL WATER MAIN AND HYDRANT GATE VALVES TO BE AWWA C509 RESILIENT WEDGE "MUELLER" A-2361 OR "CLOW" 2639 VALVES (ANY CHIPS IN THE VALVE FACTORY COATING DUE TO SHIPPING/INSTALLATION MUST BE REPAIRED USING AN APPROVED EPOXY COATING)
3. ALL SPECIFIED BRANDS OF MATERIALS SHOWN ON THESE DRAWINGS ARE "CITY STANDARDS." OTHER EQUIVALENT BRANDS MAY BE USED WITH THE PRIOR APPROVAL OF THE CITY ENGINEER AND THE CITY WATER SYSTEM SUPERINTENDENT.
4. PIPES, JOINTS, FITTINGS, VALVES, & FIRE HYDRANTS SHALL CONFORM TO ANSI / NSF 61.
5. FIRE HYDRANTS SHALL NOT BE LOCATED WITHIN 10 FEET OF A SANITARY SEWER OR WITHIN 10 FEET OF STORM DRAIN WHERE POSSIBLE.
6. ALL WATER SYSTEM MATERIALS SHALL BE NEW; USED MATERIALS ARE NOT ALLOWED.
7. ALL CULINARY WATER MAINS AND SERVICES MUST MAINTAIN A MINIMUM SEPARATION ABOVE ALL SEWER MAINS AND LATERALS OF 18" VERTICAL AND 10'-0" HORIZONTAL IN ACCORDANCE WITH THE STATE OF UTAH DIVISION OF DRINKING WATER (DDW) RULES SECTION R309-550-7. EXCEPTIONS MUST BE APPROVED BY DDW.

AIR/VACUUM RELIEF STATION NOTES:

A1. THE USE OF AN "APCO" MODEL 145C OR "VAL-MATIC" MODEL 202C COMBINATION AIR/VACUUM VALVE IS ACCEPTED WHEN APPROVED BY THE CITY WATER DEPARTMENT SUPERINTENDENT. UPSIZE VENT PIPE, AIR VENT AND FITTINGS (ITEMS D, E, F, H AND I) TO 2" DIA. AND GALVANIZED WHEN USING ALTERNATE VALVES.

A2. NO MORE THAN 12" OF GRADE RINGS TO BE ALLOWED ON ANY MANHOLE

PIPE & FITTING SCHEDULE

NO.	DESCRIPTION	FITTING
A	2" COMBINATION AIR-VACUUM RELIEF VALVE "A.R.I." MODEL D-040 W/ NPT CONNECTIONS	THR.
B	2" BRASS BALL VALVE (1/4 TURN)	THR.
C	2" BRASS DOUBLE S.S. STRAPS SERVICE SADDLE	
D	1 1/2" SCH. 80 PVC PIPE	THR.
Da	1 1/2" POLY PIPE	THR.
E	1 1/2" GALV. STEEL 90° ELBOW	THR.
F	1 1/2" SCH. 80 PVC UNION	THR.
G	2" BRASS PIPE	THR.
H	1 1/2" SCH. 80 PVC TEE	THR.
I	1 1/2" GALV. STEEL PIPE	THR.

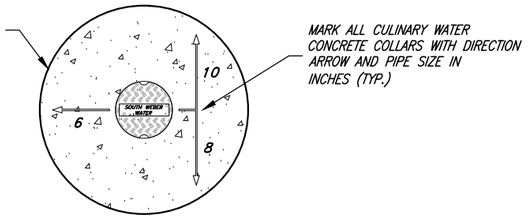

VALVE COLLAR DETAIL

CULINARY WATER SYSTEM

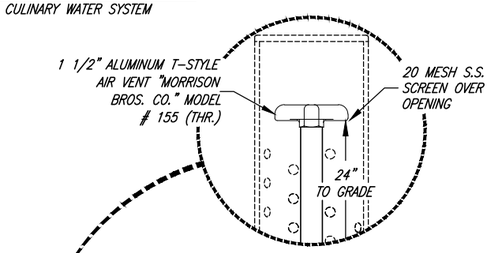

DETAIL "A"

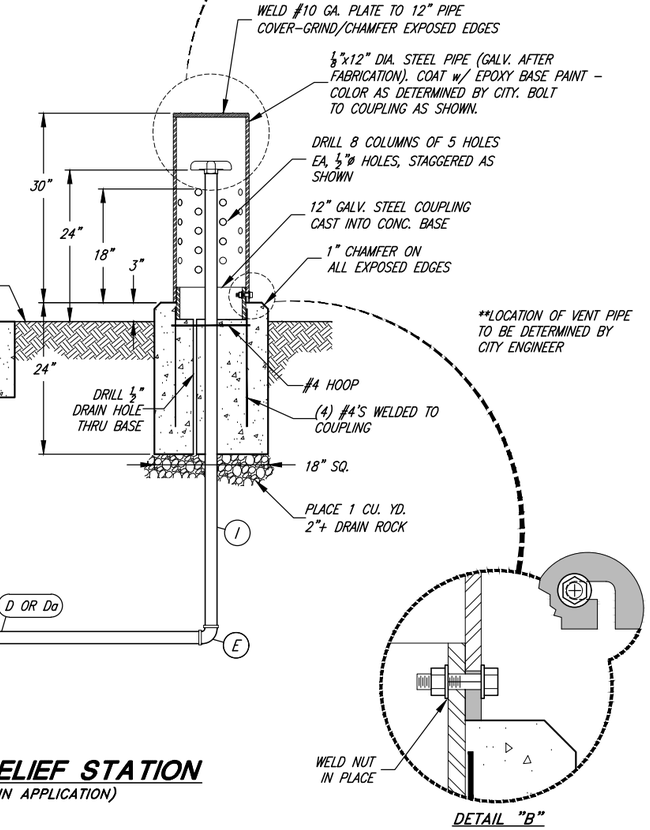

DETAIL "B"

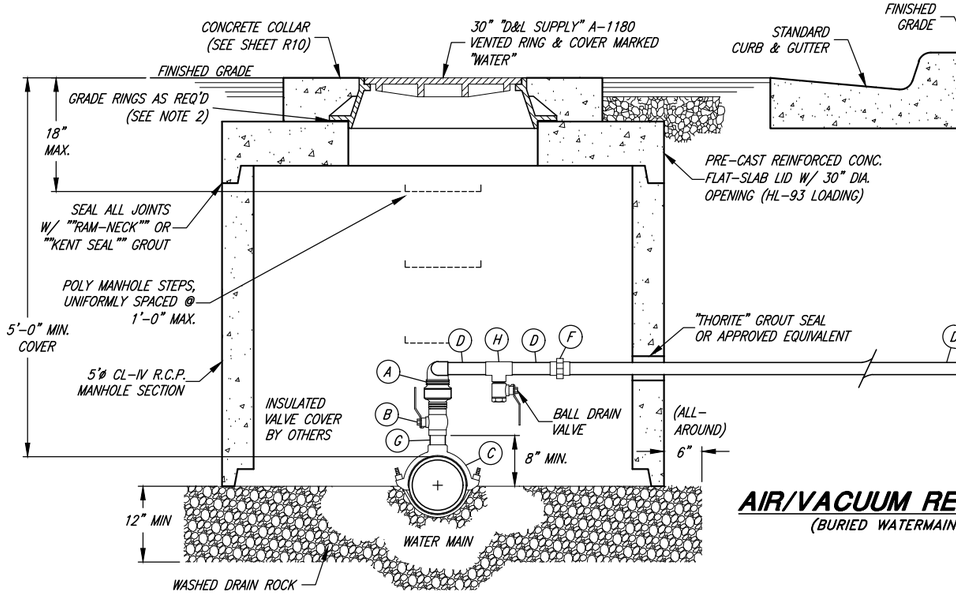

AIR/VACUUM RELIEF STATION

(BURIED WATERMAIN APPLICATION)

REGISTERED PROFESSIONAL ENGINEER — BRANDON KENT JONES No. 5148758 — State of Utah

PROJECT ENGINEER

1/10/2023

DATE

REV.	DATE	APPR.

SCALE: N.T.S.

DESIGNED BKJ
DRAWN BEB
CHECKED BKJ

JONES & ASSOCIATES — CONSULTING ENGINEERS
6080 Fashion Point Drive
South Ogden, Utah 84403 (801) 476-9767
www.jonescivil.com

SOUTH WEBER city

SOUTH WEBER CITY CORPORATION

PUBLIC WORKS - CULINARY WATER SYSTEM STANDARDS

FIRE HYDRANT, GATE VALVE, AND AIR/VACUUM RELIEF STATION DETAILS

SHEET: CW2 OF 33 SHEETS

0

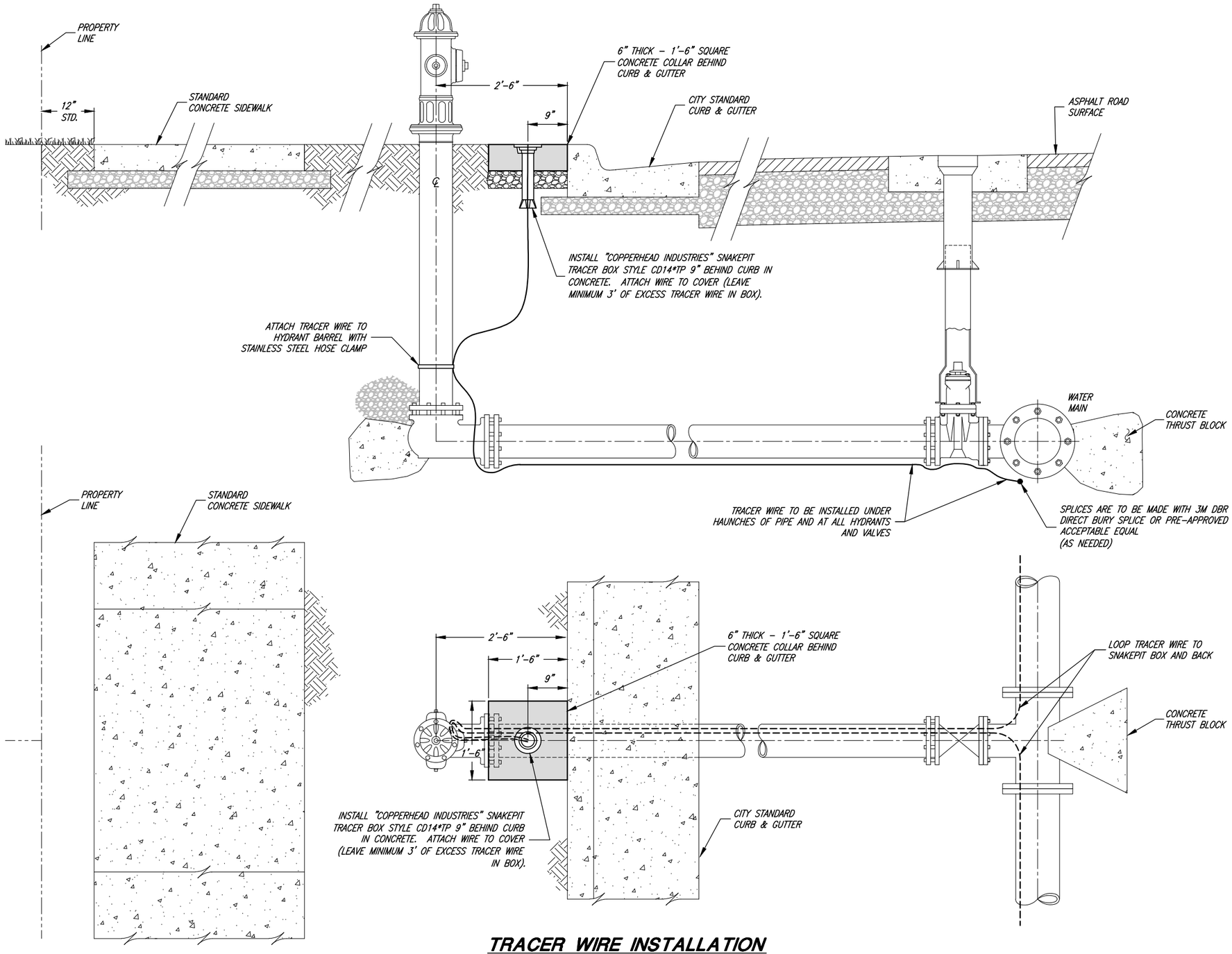

TRACER WIRE INSTALLATION

CITY STANDARD STREET SECTION (CURB & GUTTER)

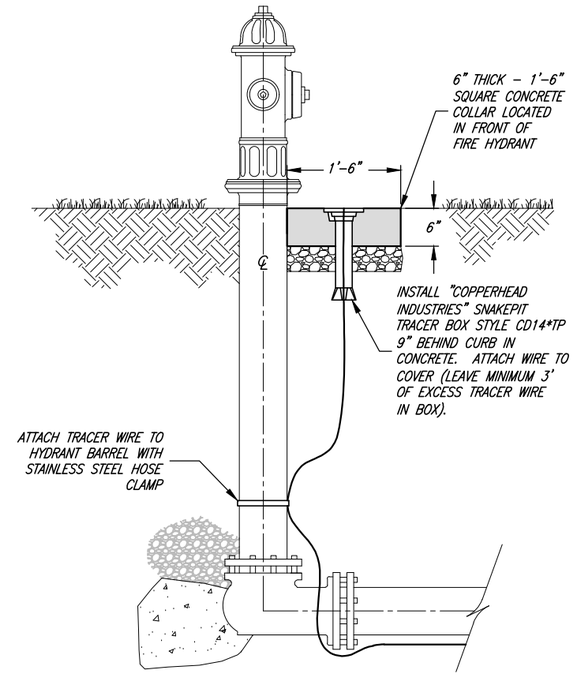

ALTERNATE TRACER WIRE INSTALLATION

WHERE APPROVED BY THE WATER SYSTEM SUPERINTENDENT ON STREET SECTIONS WITH NO CURB & GUTTER

NOTES:

1. ALL WATERLINES SHALL HAVE A MINIMUM 12 GA. INSULATED TRACER WIRE INSTALLED UNDER THE HAUNCHES OF THE PIPE PRIOR TO BACKFILLING.
2. TRACER WIRES SHALL TERMINATE AT ALL FIRE HYDRANTS. AT SERVICE SADDLES AND TAPPING SLEEVES, THE TRACER WIRE SHALL NOT BE ALLOWED TO BE PLACED BETWEEN THE SADDLE AND THE PIPE. A GROUNDING ROD SHALL BE INSTALLED AT ALL TRACER SYSTEM TERMINAL POINTS.
3. TRACER WIRE SHALL BE COPPER WIRE WITH BLUE INSULATION RATED FOR DIRECT BURIAL. ALL WIRE CONNECTORS SHALL BE 3M DBR DIRECT BURY SPLICE OR PRE-APPROVED ACCEPTABLE EQUAL AND SHALL BE WATERTIGHT TO PROVIDE ELECTRICAL CONTINUITY.
4. ALL TRACER WIRE SHALL BE TESTED FOR CONTINUITY IN THE PRESENCE OF THE PUBLIC WORKS INSPECTOR PRIOR TO ASPHALT PLACEMENT. ANY TRACER WIRE FOUND NOT TO BE CONTINUOUS AFTER TESTING SHALL BE REPAIRED OR REPLACED BY THE CONTRACTOR PRIOR TO ASPHALT PLACEMENT.

REGISTERED PROFESSIONAL ENGINEER
BRANDON KENT JONES
No. 5148758
State of Utah

PROJECT ENGINEER
1/10/2023
DATE

REV.	DATE	APPR.

SCALE: N.T.S.

DESIGNED BKJ
DRAWN BEB
CHECKED BKJ

JONES & ASSOCIATES
CONSULTING ENGINEERS
6080 Fashion Point Drive
South Ogden, Utah 84403 (801) 476-9767
www.jonescivil.com

SOUTH WEBER city

SOUTH WEBER CITY CORPORATION
PUBLIC WORKS - CULINARY WATER SYSTEM STANDARDS
TRACER WIRE INSTALLATION DETAILS

SHEET: CW3
OF 33 SHEETS
0

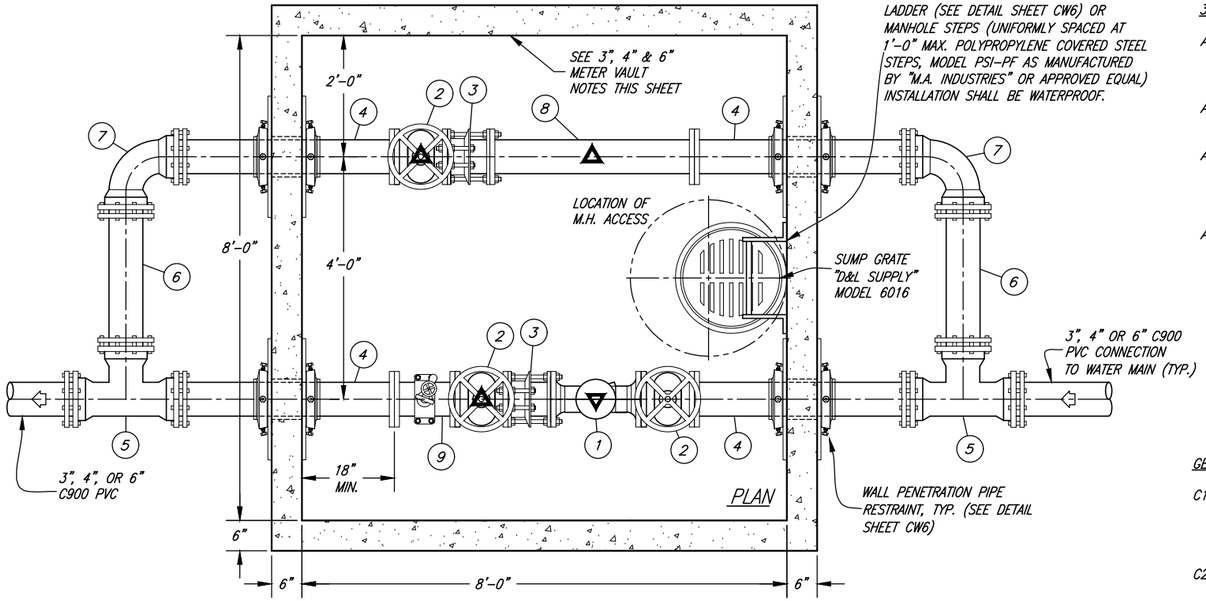

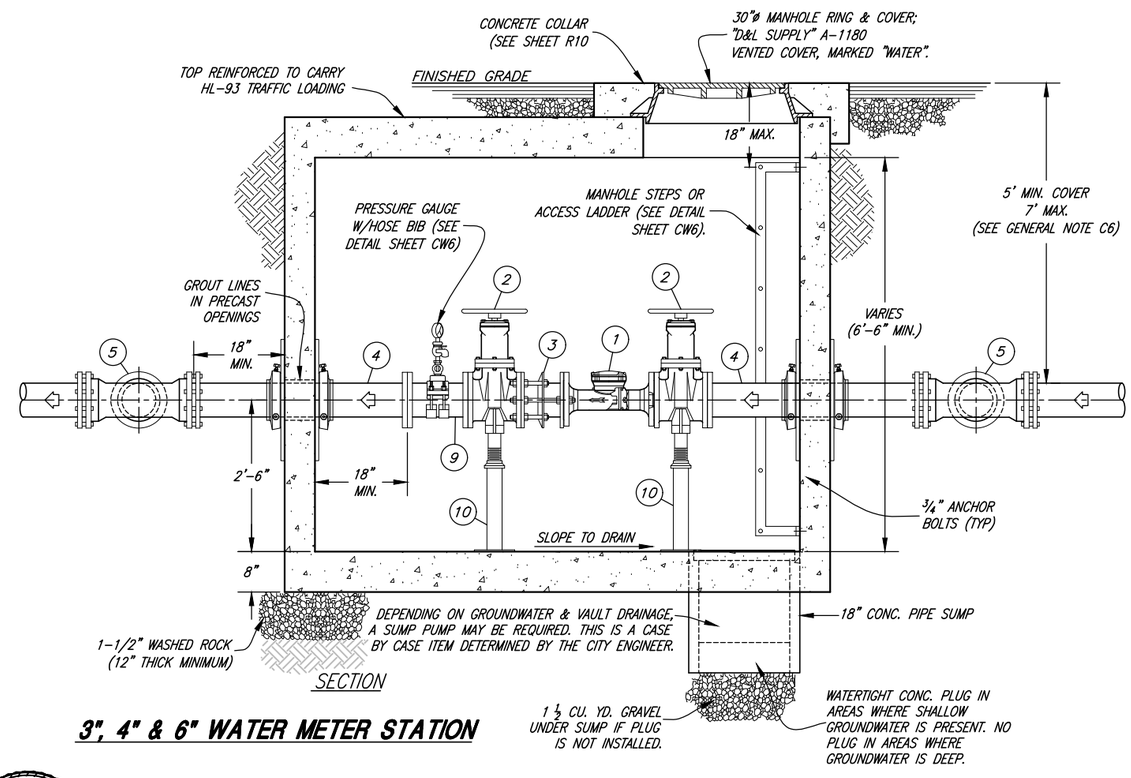

3", 4" & 6" WATER METER STATION

3", 4" & 6" METER VAULT NOTES:

A1. ALL FITTINGS OUTSIDE OF THE VAULT ARE TO BE DUCTILE IRON MJ WITH THRUST RESTRAINT RETAINER GLANDS ("ROMAC", MJRG, OR APPROVED EQUAL)

A2. PENETRATION WALLS NEED TO BE ADEQUATELY DESIGNED STRUCTURALLY FOR ANTICIPATED THRUST.

A3. THE PRECAST VAULT MANUFACTURER IS RESPONSIBLE FOR DESIGN RELATED TO TRAFFIC LOADING AND THRUST. VERIFICATION OF PROPER DESIGN MUST BE PROVIDED TO THE CITY BY THE DEVELOPER, CONTRACTOR, OR PROPERTY OWNER AS THE CASE MAY BE.

A4. ALL FITTINGS SHALL BE AWWA C-110 WITH 125 LB. FLANGES. ALL PIPING SHALL BE DUCTILE IRON PIPE CLASS 350 P.S.I. MIN.

NOTE:
ALL SPECIFIED BRANDS OF MATERIALS SHOWN ON THESE DRAWINGS ARE "CITY STANDARDS." OTHER EQUIVALENT BRANDS MAY BE USED WITH THE PRIOR APPROVAL OF THE CITY ENGINEER AND THE CITY WATER SYSTEM SUPERINTENDENT.

GENERAL NOTES:

C1. PROPERTY OWNER OR CONTRACTOR SHALL PAY FOR ALL COSTS OF INSTALLATION INCLUDING ALL MATERIALS, ALL EXCAVATION AND FILL, ASPHALT REPLACEMENT AND WATER MAIN CONNECTION.

C2. INSPECTION OF ALL WATER LINE INSTALLATIONS WILL BE DONE BY THE CITY WATER DEPARTMENT, WITH A 48 HOUR MINIMUM NOTICE REQUIRED PRIOR TO START OF WORK.

C3. IF APPLICABLE, A CITY EXCAVATION PERMIT MUST BE REQUESTED AND APPROVED PRIOR TO START OF WORK.

C4. "BLUE" BOLTS AND NUTS ARE REQUIRED BY THE CITY.

C5. CONTRACTOR TO SUPPLY ALL METERS 1 1/2" OR LARGER.

C6. ALL CULINARY WATER MAINS AND SERVICES MUST MAINTAIN A MINIMUM SEPARATION ABOVE ALL SEWER MAINS AND LATERALS OF 18" VERTICAL AND 10'-0" HORIZONTAL IN ACCORDANCE WITH THE STATE OF UTAH DIVISION OF DRINKING WATER (DDW) RULES SECTION R309-550-7. EXCEPTIONS MUST BE APPROVED BY DDW.

1 1/2" & 2" METER NOTES:

B1. 1 1/2" SERVICE LINE-13" METER
2" SERVICE LINE-17" METER

B2. NO MORE THAN 12" OF GRADE RINGS TO BE ALLOWED ON ANY MANHOLE

B3. MANHOLE STEPS (FOR MANHOLES OVER 6' DEEP.) UNIFORMLY SPACED (1'-0" MAX.) POLYPROPYLENE COVERED STEEL STEPS, MODEL PSI-PF AS MANUFACTURED BY "M.A. INDUSTRIES" OR APPROVED EQUAL - INSTALLATION OF STEPS SHALL BE WATERPROOF.

PIPE & FITTING SCHEDULE

NO.	DESCRIPTION (3", 4" & 6" METER STA.)	JOINT TYPE	3" LINE	4" LINE	6" LINE
1	"MASTER METER" OCTAVE ULTRASONIC METER W/ 3G INTEGRATED REGISTER	FL	3"	4"	6"
2	"MUELLER" RESILIENT WEDGE GATE VALVE W/ HANDWHEEL (3)	FL	3" A-2362	4" A-2361	6" A-2361
3	"ROMAC" DJ400 DISMANTLING JOINT (2)	FL	3"	4"	6"
4	NIPPLE	FLxPE	3"	4"	6"
5	TEE	MJ	3"	4"	6"
6	PIPE SECTION	PE	3"	4"	6"
7	90° ELBOW	MJ	3"	4"	6"
8	SPOOL PIECE	FL	3"	4"	6"
9	SPOOL PIECE	FL	3"	4"	6"
10	"CLOW" F-1608 OR "ANVIL" #264 GALV. PIPE SUPPORT W/ COMPANION FLANGE & VARIABLE HEIGHT NIPPLE (4 EA REQ'D)				▲ SYMBOL

NO.	DESCRIPTION (1 1/2" & 2" METER STA.)	JOINT TYPE	1 1/2" LINE	2" LINE
11	"MASTER METER" INTERMEDIATE MULTI-JET METER W/3G INTEGRATED REGISTER	FL	1 1/2"	2"
12	"MUELLER" B-2423-2 METER YOKE (18" RISER)	–	1 1/2"	2"
13	"MUELLER" 110 COMPRESSION CONN. COUPLING	–	1 1/2"	2"

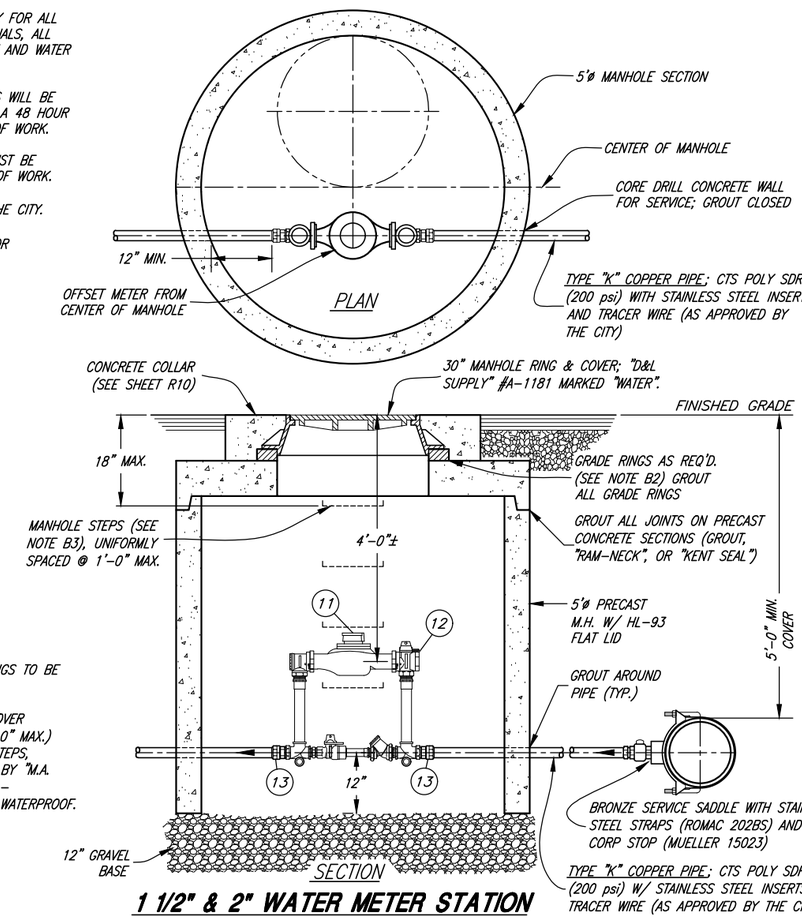

1 1/2" & 2" WATER METER STATION

REGISTERED PROFESSIONAL ENGINEER — BRANDON KENT JONES No. 5148758 — State of Utah

PROJECT ENGINEER: Brandon K. Jones
DATE: 1/10/2023

REV.	DATE	APPR.

SCALE: N.T.S.

DESIGNED BKJ
DRAWN BEB
CHECKED BKJ

JONES & ASSOCIATES — CONSULTING ENGINEERS
6080 Fashion Point Drive
South Ogden, Utah 84403 (801) 476-9767
www.jonescivil.com

SOUTH WEBER city

SOUTH WEBER CITY CORPORATION
PUBLIC WORKS - CULINARY WATER SYSTEM STANDARDS

TYPICAL WATER METER STATIONS

SHEET: CW4
OF 33 SHEETS
0

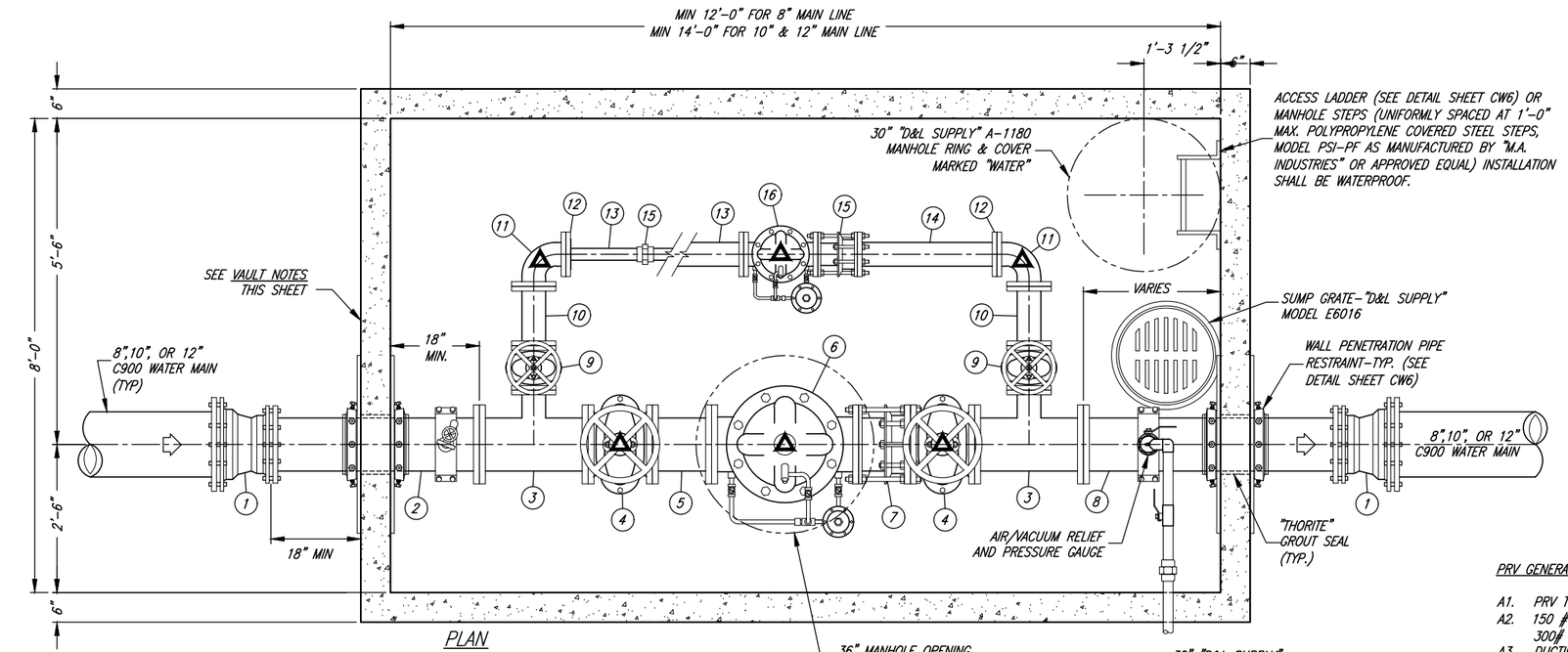

PLAN

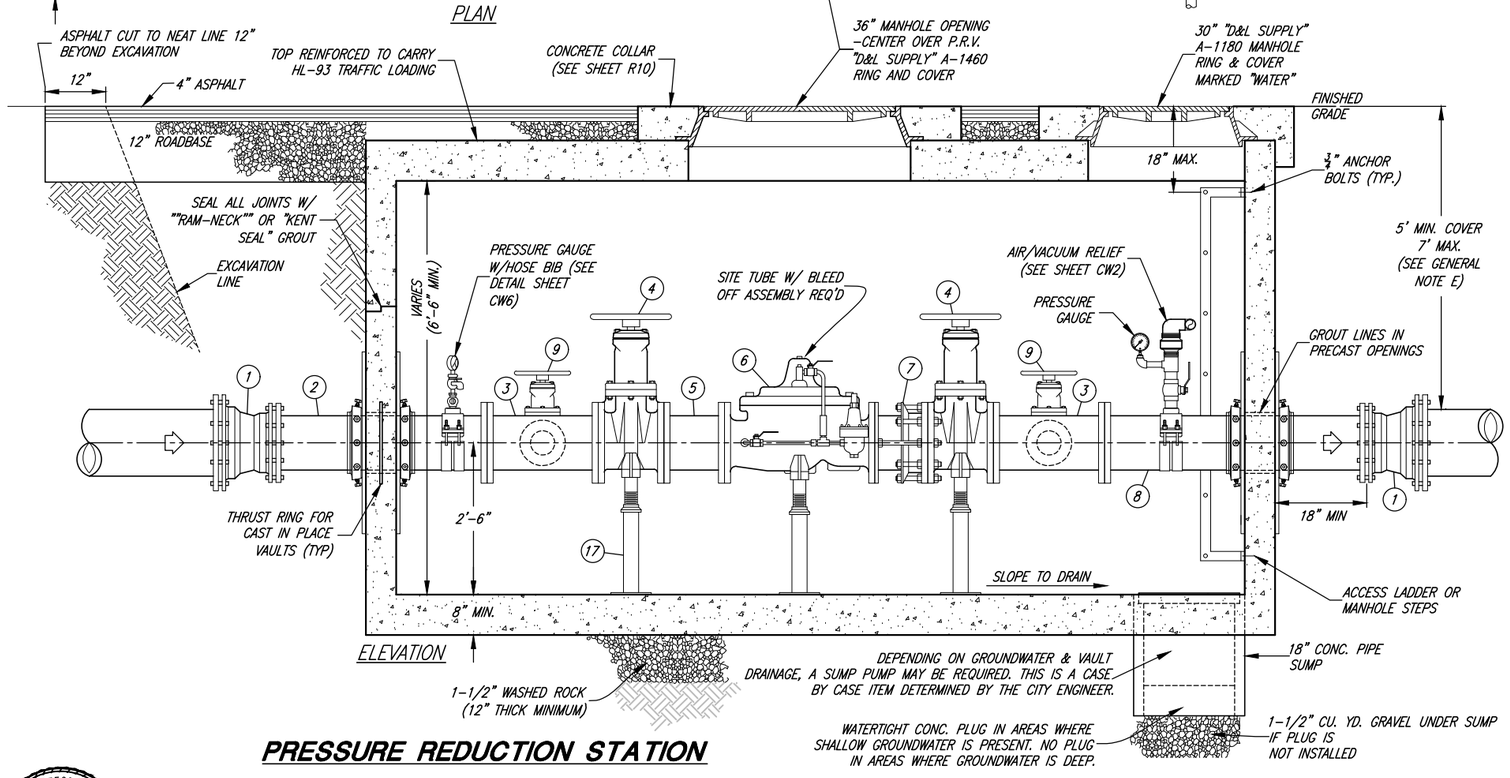

ELEVATION

PRESSURE REDUCTION STATION

PIPE & FITTING SCHEDULE

NO.	DESCRIPTION	JOINT TYPE	8" LINE	10" LINE	12" LINE
1	D.I. REDUCER (2)	MJxMJ	8"x6"	10"x8"	12"x10"
2	D.I. NIPPLE PIECE	FLxPE	6"	8"	10"
3	D.I. REDUCING TEE (2)	FL	6"X6"X4"	8"X8"X4"	10"X10"X4"
4	"MUELLER" A-2361 GATE VALVE W/ HANDWHEEL (2)	FL	6"	8"	10"
5	12" D.I. SPOOL PIECE	FL	6"	8"	10"
6	"CLA-VAL" 90-01 PRESSURE REDUCTION VALVE	FL	6"	8"	10"
7	"ROMAC" DJ400 DISMANTLING JOINT	FL	6"	8"	10"
8	D.I. NIPPLE PIECE	FLxPE	6"	8"	10"
9	"MUELLER" A-2361 GATE VALVE W/ HANDWHEEL (2)	FL	4"	4"	4"
10	12" D.I. SPOOL PIECE	FL	4"	4"	4"
11	D.I. 90° ELBOW (2)	FL	4"	4"	4"
12	BLIND FLANGE W/ THR. CONNECTION (2)	FLxTHR.	4"x2"	--	--
13	D.I. SPOOL PIECE	FL	--	4"	4"
	BRASS PIPE	THR.	2"	--	--
14	D.I. SPOOL PIECE	FL	--	4"	4"
	BRASS PIPE	THR.	2"	--	--
15	"ROMAC" DJ400 DISMANTLING JOINT	FL	--	4"	4"
	BRASS UNION	THR.	2"	--	--
16	"CLA-VAL" 90-01 PRESSURE REDUCTION VALVE	FL	--	4"	4"
		THR.	2"	--	--
17	"CLOW" F-1608 OR "ANVIL" #264 GALV. PIPE SUPPORT W/ 3" COMPANION FLANGE & VARIABLE HEIGHT 3" NIPPLE (6 EA REQ'D.)				△ SYMBOL

PRV GENERAL SPECIFICATIONS:

A1. PRV TO BE CLA-VAL #90-01 YBCSKC
A2. 150 # FLANGED FOR 250 PSI WORKING PRESSURE, 300# FLANGED IF GREATER THAN 250 PSI
A3. DUCTILE IRON BODY GLOBE PATTERN
A4. EPOXY LINED AND COATED
A5. STAINLESS STEEL INTERNAL TRIM
A6. BRONZE PILOT CONTROLS
A7. STAINLESS STEEL TUBES & FITTINGS
A8. SPRING RANGES FOR PRESSURE REDUCING PILOT
A9. X101 VALVE POSITION INDICATOR
A10. CK2 ISOLATION BALL VALVES (STAINLESS)
A11. CV FLOW CONTROL (OPENING)

COATING NOTES:

B1. THE P.R.V. VALVE SHALL INCLUDE FACTORY INSTALLED INTERIOR EPOXY COATING.

B2. ALL NEW AND EXISTING PIPING, VALVES, FITTINGS, METERS, ETC, INSIDE THE VAULT SHALL BE EPOXY PAINTED.

B3. METAL SURFACES TO BE PAINTED SHALL BE PRIMED AND THEN PAINTED W/ TWO COATS OF EPOXY PAINT.

B4. COLORS AS DIRECTED BY THE CITY ENGINEER OR CITY WATER SYSTEM SUPERINTENDENT.

VAULT NOTES:

C1. PRE-PLUMBED PRV VAULTS ARE THE PREFERRED OPTION FOR INSTALLATION. THE USE AND LOCATION OF A PRE-PLUMBED PRV VAULT SHALL BE AS DIRECTED BY THE CITY ENGINEER FOLLOWING REVIEW OF CURRENT SITE CONDITIONS.

C2. WHERE APPLICABLE, PRESSURE RELIEF VALVE ASSEMBLY MAY BE REQUIRED. THIS IS A CASE BY CASE ITEM DETERMINED BY THE CITY WATER DEPARTMENT (PRV VAULT WILL NEED TO BE LENGTHENED TO ACCOMMODATE SUCH VALVE)

C3. PRECAST CONCRETE STRUCTURE CAN BE REPLACED WITH CAST-IN-PLACE CONCRETE VAULT. SUBMIT ENGINEERED CONSTRUCTION PLANS WITH REBAR DETAILS TO CITY ENGINEER FOR REVIEW AND ACCEPTANCE PRIOR TO CONSTRUCTION.

C4. PENETRATION WALLS NEED TO BE ADEQUATELY DESIGNED STRUCTURALLY FOR ANTICIPATED THRUST.

C5. THE PRECAST VAULT MANUFACTURER IS RESPONSIBLE FOR DESIGN RELATED TO HL-93 TRAFFIC LOADING AND THRUST. VERIFICATION OF PROPER DESIGN MUST BE PROVIDED TO THE CITY BY THE DEVELOPER, CONTRACTOR, OR PROPERTY OWNER AS THE CASE MAY BE.

GENERAL NOTES:

A. "BLUE" BOLTS AND NUTS ARE REQUIRED BY THE CITY.

B. ALL FITTINGS OUTSIDE OF THE VAULT ARE TO BE DUCTILE IRON MJ WITH THRUST RESTRAINT RETAINER GLANDS ("ROMAC", MJRG, OR APPROVED EQUAL)

C. STRUCTURE, PIPING & VALVE SIZES FOR P.R.V. STATIONS ON LINE SIZES GREATER THAN 12" SHALL BE SPECIFIED BY THE CITY ENGINEER.

D. ALL SPECIFIED BRANDS OF MATERIALS SHOWN ON THESE DRAWINGS ARE "CITY STANDARDS." OTHER EQUIVALENT BRANDS MAY BE USED WITH THE PRIOR APPROVAL OF THE CITY ENGINEER AND THE CITY WATER SYSTEM SUPERINTENDENT.

E. ALL CULINARY WATER MAINS AND SERVICES MUST MAINTAIN A MINIMUM SEPARATION ABOVE ALL SEWER MAINS AND LATERALS OF 18" VERTICAL AND 10'-0" HORIZONTAL IN ACCORDANCE WITH THE STATE OF UTAH DIVISION OF DRINKING WATER (DDW) RULES SECTION R309-550-7. EXCEPTIONS MUST BE APPROVED BY DDW.

REGISTERED PROFESSIONAL ENGINEER
BRANDON KENT JONES
No. 5148758
State of Utah

PROJECT ENGINEER
1/10/2023
DATE

REV.	DATE	APPR.

SCALE: N.T.S.

DESIGNED BKJ
DRAWN BEB
CHECKED BKJ

JONES & ASSOCIATES
CONSULTING ENGINEERS
6080 Fashion Point Drive
South Ogden, Utah 84403 (801) 476-9767
www.jonescivil.com

SOUTH WEBER city

SOUTH WEBER CITY CORPORATION
PUBLIC WORKS - CULINARY WATER SYSTEM STANDARDS
PRESSURE REDUCTION STATION

SHEET: CW5
OF 33 SHEETS
0

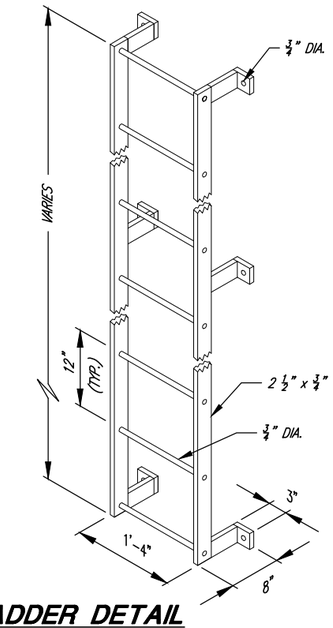

LADDER DETAIL

HOT DIP GALVANIZE AFTER FABRICATION

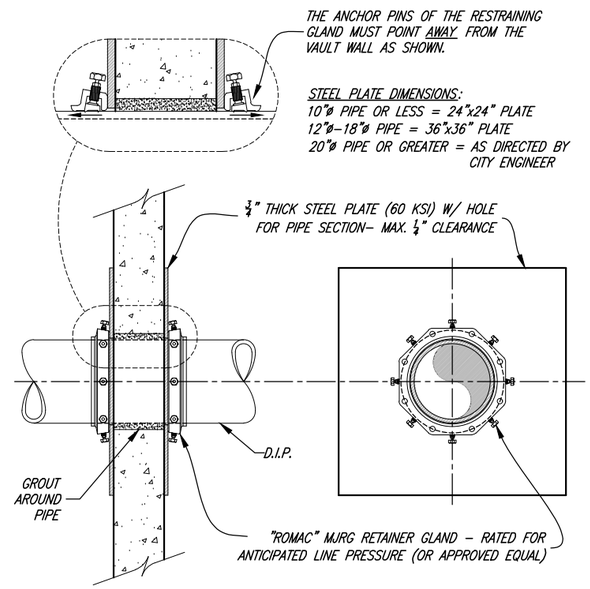

WALL PENETRATION DETAIL

FOR PRECAST VAULT (TYP)

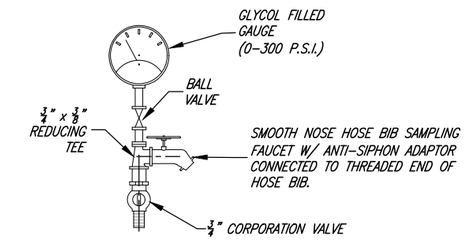

PRESSURE GAUGE

W/SAMPLING FAUCET DETAIL

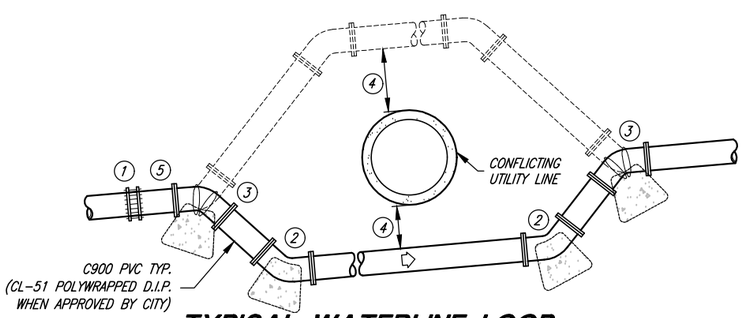

TYPICAL WATERLINE LOOP

1. TRANSITION COUPLING; "ROMAC" ALPHA, "ROMAC" MACRO, OR APPROVED EQUAL
2. MJ 45° BEND W/RETAINER GLANDS
3. CONSTRUCT THRUST BLOCKS AT EACH 45° BEND W/(3) #6 REBAR SECURING BLOCK TO FITTING (EPOXY COATING)
4. MINIMUM OF 12" COVER BETWEEN THE WATERLINE AND CONFLICTING UTILITY LINE TO BE CROSSED, EXCEPT LOOPS INVOLVING SEWER MAINS WHERE A MINIMUM OF 18" VERTICAL COVER ABOVE THE SEWER MAIN IS REQUIRED. EXCEPTIONS MUST BE APPROVED BY THE UTAH DIVISION OF DRINKING WATER (DDW.)
5. AN AIR/VACUUM RELIEF VALVE MAY BE REQUIRED ON A CASE BY CASE BASIS AS DIRECTED BY THE CITY WATER SYSTEM SUPERINTENDENT.

PIPE RESTRAINT

A1. FOR NOMINAL PIPE DIAMETERS 8" AND GREATER, ALL BENDS, CROSSES, TEES, REDUCERS, AND VALVES SHALL BE INSTALLED WITH RESTRAINING JOINTS ("MEGA-LUG", "ALPHA" OR APPROVED EQUAL).

A2. DESIGN SHALL ALSO BE REQUIRED TO ENSURE ADEQUATE RESTRAINT FOR PIPING JOINTS NEAR FITTINGS BASED ON PIPE DIAMETER AND PIPE PRESSURE.

THRUST BLOCKING NOTES:

B1. CONCRETE SHALL NOT BE PLACED WITHIN 1-1/2" OF JOINTS AND BOLTS. COVER ALL METAL CONTACT AREAS WITH A POLY WRAP PRIOR TO CONCRETE PLACEMENT.

B2. IN THE ABSENCE OF A SOILS REPORT, ALL THRUST BLOCKS SHALL BE SIZED ON THE BASIS OF A MAXIMUM LATERAL BEARING VALUE FOR 2000 P.S.F. AND A THRUST RESULTING FROM 200% OF THE WATER LINE STATIC LINE TEST.

B3. THRUST BLOCKS ARE REQUIRED AT ALL BENDS OF 22-1/2° OR MORE. 11-1/4° BENDS SHALL HAVE RETAINER GLANDS.

B4. CONCRETE SHALL HAVE A MINIMUM COMPRESSIVE STRENGTH OF 3000 PSI IN 28 DAYS.

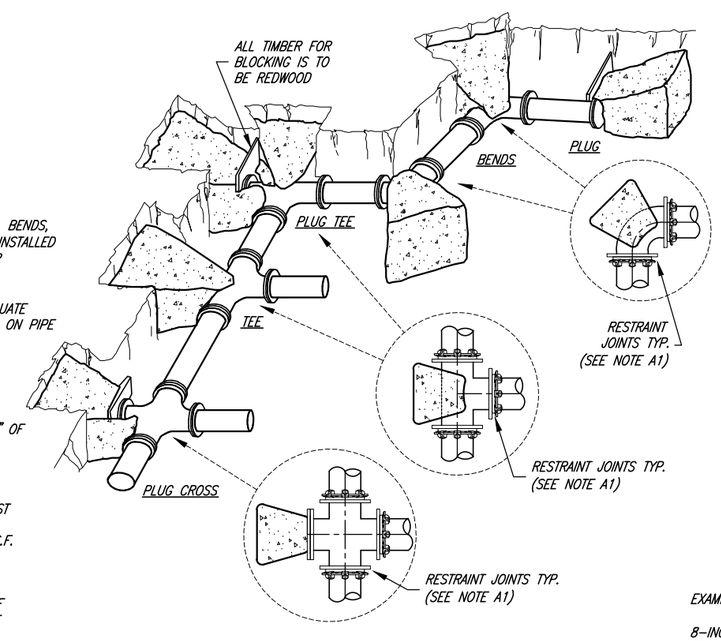

TYPICAL RETAINER GLANDS & THRUST BLOCKING

THRUST PER PSI OF WATER PRESSURE AT VARIOUS FITTINGS				
PIPE SIZE (IN.)	DEAD END OR TEE (LB.)	90° ELBOW (LB.)	45° ELBOW (LB.)	22-1/2° ELBOW (LB.)
4	19	27	15	7
6	39	55	30	15
8	67	94	51	26
10	109	154	84	43
12	155	218	119	61
14	210	296	161	82
16	272	383	209	106
18	351	494	269	137
20	434	611	333	169
24	623	878	487	244
30	947	1,332	722	377
36	1,356	1,905	1,032	542

NOTES:

C1. IN USING THE ABOVE TABLE, USE THE MAXIMUM INTERNAL PRESSURE ANTICIPATED (I.E. HYDROSTATIC TEST PRESSURE, POSSIBLE SURGE PRESSURE DUE TO PUMP SHUT OFF, ETC.).

C2. SEE SOILS REPORT FOR BEARING STRENGTH OF SOIL. IN THE ABSENCE OF A SOILS REPORT, AN AVERAGE SOIL (SPADABLE MEDIUM CLAY) CAN BE ASSUMED TO HAVE A BEARING STRENGTH OF 2000 P.S.F.

EXAMPLE:

8-INCH 90° ELBOW, PRESSURE 200 LB./SQ. IN.
FROM TABLE: THRUST = 94 X 200 = 18,800 LB.
ASSUME BEARING STRENGTH = 2.000 LB./SQ. FT.

18,8000 / 2,000 = 9.4 SQ. FT. — AREA OF BEARING REQUIRED FOR THRUST BLOCK

REGISTERED PROFESSIONAL ENGINEER — BRANDON KENT JONES No. 5148758 — State of Utah

PROJECT ENGINEER

1/10/2023

DATE

REV.	DATE	APPR.	

SCALE: N.T.S.

DESIGNED BKJ
DRAWN BEB
CHECKED BKJ

JONES & ASSOCIATES — CONSULTING ENGINEERS
6080 Fashion Point Drive
South Ogden, Utah 84403 (801) 476-9767
www.jonescivil.com

SOUTH WEBER city

SOUTH WEBER CITY CORPORATION
PUBLIC WORKS - CULINARY WATER SYSTEM STANDARDS

THRUST BLOCK, WATERLINE LOOP, AND MISC. VAULT DETAILS

SHEET: CW6 OF 33 SHEETS
0

COMMERCIAL DEV. POINT OF CONNECTION	
NO.	DESCRIPTION
B1	WATER SERVICE CONNECTION
B2	CITY STANDARD CULINARY WATER SERVICE METER (SEE SHEET CW1 AND/OR CW4)
B3	GATE VALVE & VALVE BOX
	STOP & WASTE VALVE AND BOX
B4	BACKFLOW ASSEMBLY (REDUCED PRESSURE ZONE ASSEMBLY)
B5	WATER SERVICE PIPE
B6	QUICK COUPLER/FOR BLOW OUT
B7	MANUAL DRAIN VALVE
B8	MASTER VALVE

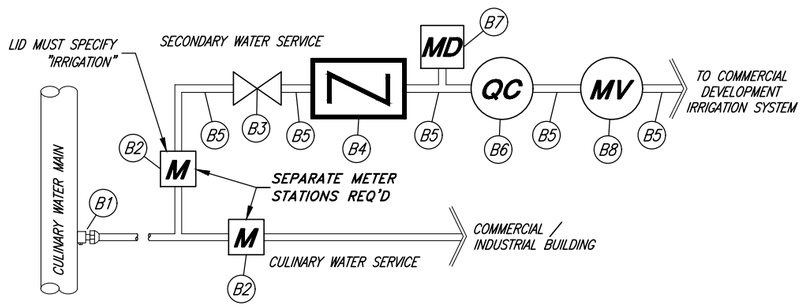

TYPICAL COMMERCIAL / INDUSTRIAL DEVELOPMENT POINT OF CONNECTION SCHEMATIC DIAGRAM

REQUIRES PRE-APPROVAL BY THE PUBLIC WORKS DEPARTMENT AND THE CITY ENGINEER PRIOR TO CONSTRUCTION (CONNECTION SHALL BE DETERMINED ON A CASE BY CASE BASIS)

GENERAL NOTES:

1. DESIGN, CONSTRUCTION, AND INSTALLATION SHALL BE DONE ACCORDING TO AND COMPLY WITH ALL CURRENT ADOPTED BUILDING AND PLUMBING CODES, AND TO MANUFACTURERS WRITTEN INSTRUCTIONS AND RECOMMENDATIONS.
2. ALL TESTING, MAINTENANCE, AND/OR REPAIR SHALL BE PERFORMED BY A STATE CERTIFIED BACKFLOW ASSEMBLY TECHNICIAN.
3. THE ASSEMBLY MUST BE THOROUGHLY DRAINED AND WINTERIZED EACH WINTER.
4. THE RP ASSEMBLY SHALL BE PROTECTED FROM FREEZING AND VANDALISM WHERE APPLICABLE.
5. ABOVE GROUND FITTINGS TO BE EPOXY PAINTED BLUE ON THE CULINARY SIDE AND PURPLE ON THE SECONDARY SIDE.
6. PROVIDE BOLLARDS OR OTHER PROTECTION IF AND AS DIRECTED BY THE CITY.
7. RP ASSEMBLY DESIGN AND CONSTRUCTION DETAILS/DRAWINGS TO BE SUBMITTED TO THE CITY ENGINEER AND THE CITY WATER DIVISION FOR APPROVAL PRIOR TO INSTALLATION.
8. LOCATION OF BACKFLOW ASSEMBLY SHALL BE APPROVED BY THE CITY WATER DIVISION PRIOR TO INSTALLATION.
9. ALL BACKFLOW PREVENTION ASSEMBLIES SHALL BE TESTED WITHIN 10 DAYS OF INITIAL USE BY A LICENSED BACKFLOW ASSEMBLY TESTER.
10. ALL BACKFLOW PREVENTION ASSEMBLIES ARE TO BE TESTED ANNUALLY BY A CERTIFIED TESTER AND REPAIRS OR MAINTENANCE COMPLETED AS NEEDED. ANNUALLY SUBMIT TEST RESULTS TO THE CITY WATER DIVISION.

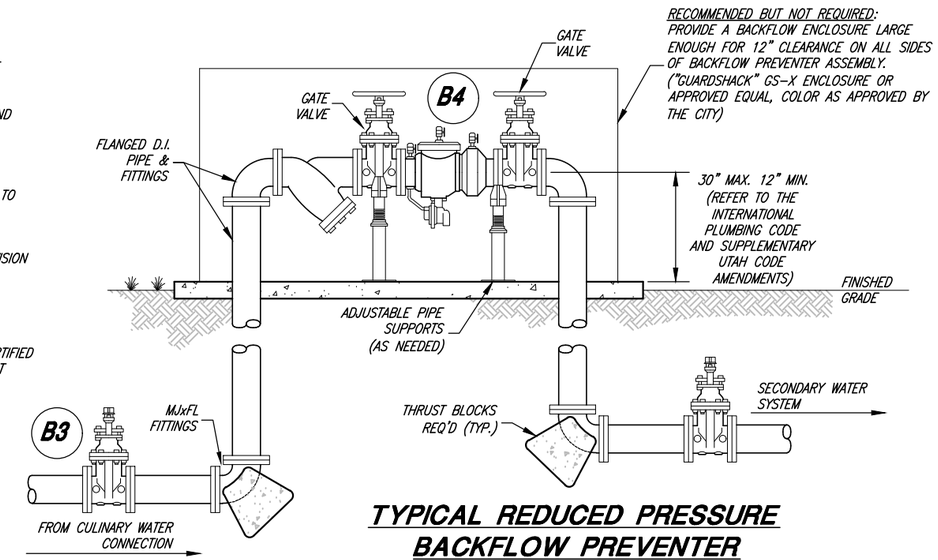

TYPICAL REDUCED PRESSURE BACKFLOW PREVENTER

4" AND LARGER DIAMETER

REDUCED PRESSURE ASSEMBLY (RP) NOTES:

A1. AN RP ASSEMBLY SHALL BE INSTALLED WHEN A SECONDARY SERVICE IS CONNECTED TO THE CULINARY WATER SYSTEM.

A2. THE RP ASSEMBLY SHALL BE INSTALLED IN A HORIZONTAL POSITION ONLY.

A3. RP ASSEMBLIES SHALL NOT BE INSTALLED IN A PIT.

A4. THE BODY OF THE RP ASSEMBLY SHALL BE A MINIMUM OF 12 INCHES FROM ANY WALLS, CEILINGS, OR ENCUMBRANCES AND SHALL BE READILY ACCESSIBLE FOR TESTING, REPAIR AND/OR MAINTENANCE.

A5. THE BOTTOM OF THE RP ASSEMBLY SHALL BE A MINIMUM OF 12 INCHES ABOVE THE GROUND FLOOR.

A6. RP VALVE ASSEMBLY AND PIPES TO MATCH SECONDARY LATERAL/MAIN SIZE.

A7. THE BACKFLOW PREVENTER SHALL BE BRONZE FOR 6-INCH AND SMALLER VALVES, AND EPOXY COATED DUCTILE IRON FOR 8-INCH AND LARGER VALVES.

A8. BACKFLOW PREVENTION DEVICES SHALL BE SELECTED FROM A LIST OF APPROVED DEVICES SET FORTH BY THE UTAH DIVISION OF DRINKING WATER. REDUCED PRESSURE ASSEMBLIES (RP) AND CITY ENGINEER APPROVED DOUBLE CHECK VALVE ASSEMBLIES (DCA) WILL BE THE ONLY ACCEPTED STYLES OF BACKFLOW PREVENTION DEVICES.

TYPICAL PIPE & FITTING SCHEDULE	
NO.	DESCRIPTION
C1	TO POINT OF CONNECTION - ADAPT AS NECESSARY. ALL WORK SHALL CONFORM TO ALL APPLICABLE CODES
C2	BRASS WYE STRAINER W/ 60 MESH SCREEN
C3	PRESSURE REDUCING VALVE (AS REQUIRED)
C4	DIVISION OF DRINKING WATER APPROVED BACKFLOW PREVENTER UNIT (REDUCED PRESSURE ZONE ASSEMBLY)
C5	BRASS 90 DEGREE ELBOW (TYP.)
C6	BRASS UNION (TYP.)
C7	BRASS PIPE (TYP.)
C9	BRASS COUPLING
C10	PIPE ADAPTER AND MAINLINE PIPE
THE USE OF GALVANIZED STEEL PIPE & FITTINGS IS ACCEPTED WHEN APPROVED BY THE CITY WATER DIVISION	

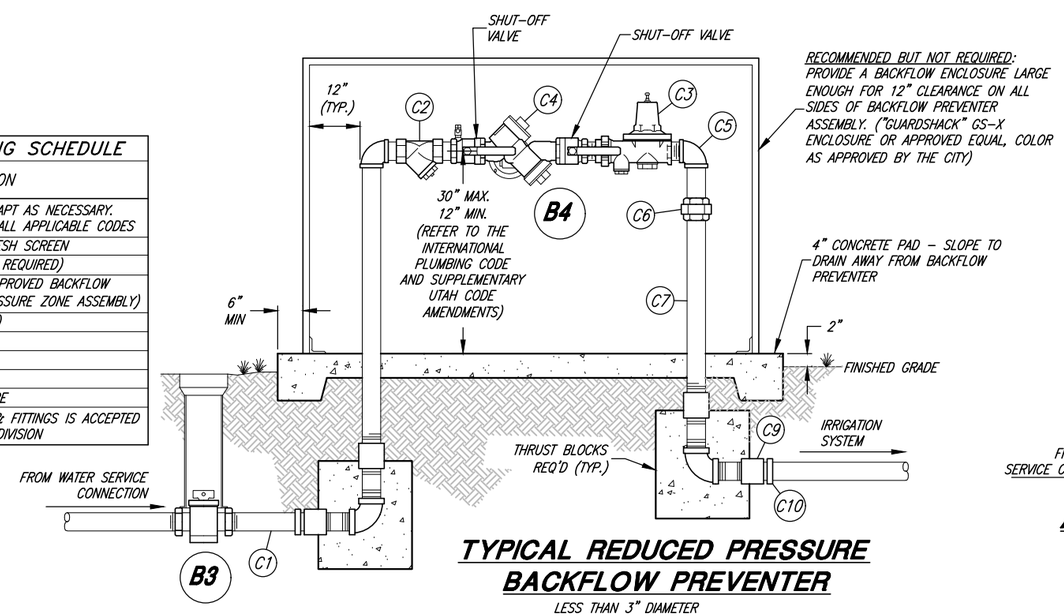

TYPICAL REDUCED PRESSURE BACKFLOW PREVENTER

LESS THAN 3" DIAMETER

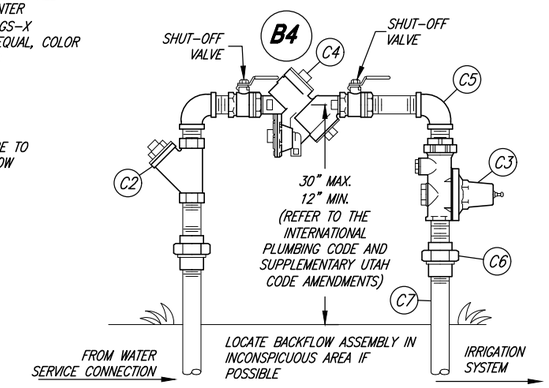

ALTERNATE REDUCED PRESSURE BACKFLOW PREVENTER

OPTIONAL ALTERNATE FOR COMMERCIAL DEVELOPMENTS LESS THAN ONE ACRE

REGISTERED PROFESSIONAL ENGINEER — BRANDON KENT JONES No. 5148758 — State of Utah

PROJECT ENGINEER

1/10/2023

DATE

REV.	DATE	APPR.	

SCALE: N.T.S.

DESIGNED BKJ
DRAWN BEB
CHECKED BKJ

JONES & ASSOCIATES — CONSULTING ENGINEERS
6080 Fashion Point Drive
South Ogden, Utah 84403 (801) 476-9767
www.jonescivil.com

SOUTH WEBER city

SOUTH WEBER CITY CORPORATION
PUBLIC WORKS - CULINARY WATER SYSTEM STANDARDS
REDUCED PRESSURE (RP) BACKFLOW PREVENTION ASSEMBLY

SHEET: CW7 OF 33 SHEETS 0

GENERAL NOTES:

1. ALL SANITARY SEWER LATERAL CONNECTIONS ON SEWER MAINS IN NEW SUBDIVISIONS SHALL BE MADE WITH IN LINE PRE-FORMED WYES OR TEES UNLESS OTHERWISE APPROVED BY THE CITY ENGINEER.
2. FLOWLINE ELEVATION OF LATERALS SHALL EQUAL THE INSIDE TOP OF PIPE ON MAINLINE AT THE CONNECTING POINT (THE LATERAL TAP SHALL BE IN THE TOP QUARTER OF THE SEWER MAIN LINE PREFERABLY IN THE 10:00 OR 2:00 POSITION).
3. SANITARY SEWER SERVICE LATERAL CONNECTIONS SHALL NOT BE ALLOWED IN SEWER MANHOLES.
4. SANITARY SEWER MAINS AND LATERALS SHALL BE "GREEN" IN COLOR. LAND DRAIN MAIN LINES SHALL BE "GREEN" IN COLOR AND LAND DRAIN LATERAL LINES SHALL BE "WHITE IN COLOR, IRRIGATION PIPES SHALL BE "PURPLE" IN COLOR. PREVIOUS YEARS PIPE COLORS VARY THROUGHOUT THE CITY. **CONTRACTOR TO VERIFY EXISTING PIPE PRIOR TO MAKING ANY CONNECTION,**
5. INSERTA TEE PRODUCT IS NOT APPROVED BY THE CITY
6. ALL CLEANOUTS SHALL BE MARKED AND FITTED WITH A METAL LID FOR LOCATION PURPOSES
7. ALL CULINARY WATER MAINS AND SERVICES MUST MAINTAIN A MINIMUM SEPARATION ABOVE ALL SEWER MAINS AND LATERALS OF 18" VERTICAL AND 10'-0" HORIZONTAL IN ACCORDANCE WITH THE STATE OF UTAH DIVISION OF DRINKING WATER (DDW) RULES SECTION R309-550-7. EXCEPTIONS MUST BE APPROVED BY DDW.
8. ALL SANITARY SEWER LINES SHALL BE INSPECTED BY MEANS OF VIDEO CAMERA WHEN CONSTRUCTED.
9. STAMPED STAINLESS STEEL PINS USED FOR LATERAL LOCATING ARE REQUIRED BY THE CITY. BLANK S.S. PINS SHALL BE PROVIDED BY THE CITY AND INSTALLED AND STAMPED BY THE CONTRACTOR DURING ALL NEW CONSTRUCTION OR RESTORED WHEN REPLACING DAMAGED CURB & GUTTER DUE TO ANY CONSTRUCTION RELATED ACTIVITY. S.S. PINS SHALL BE STAMPED "S" FOR SANITARY SEWER, "W" FOR CULINARY WATER, AND "L" FOR LAND DRAIN.
10. DOWNSTREAM LAND DRAIN CONNECTION TO AN EXISTING STORM DRAIN SYSTEM IS REQUIRED.

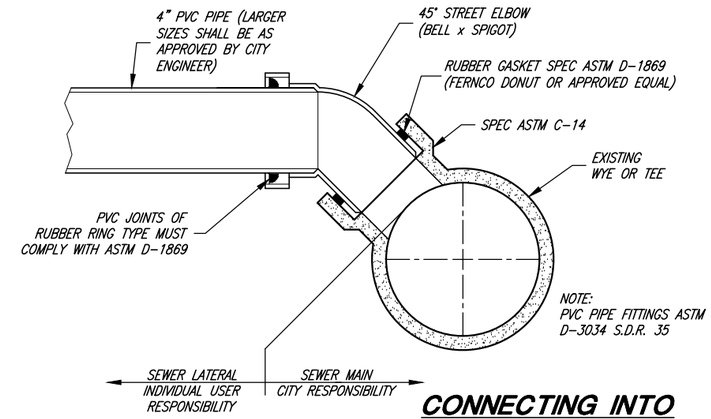

CONNECTING INTO EXISTING WYE OR TEE

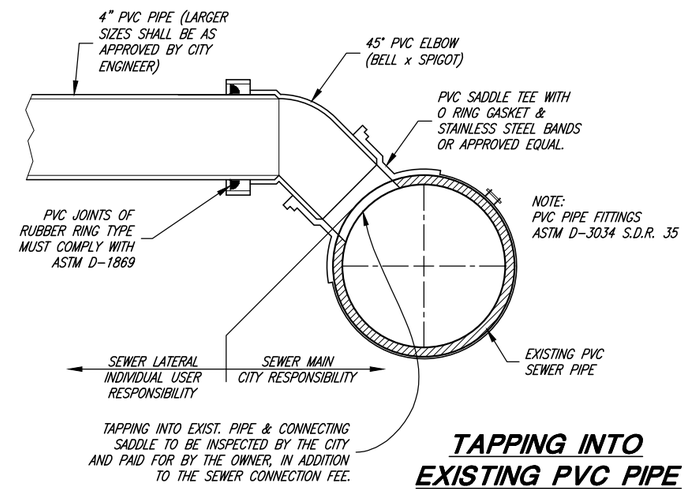

TAPPING INTO EXISTING PVC PIPE

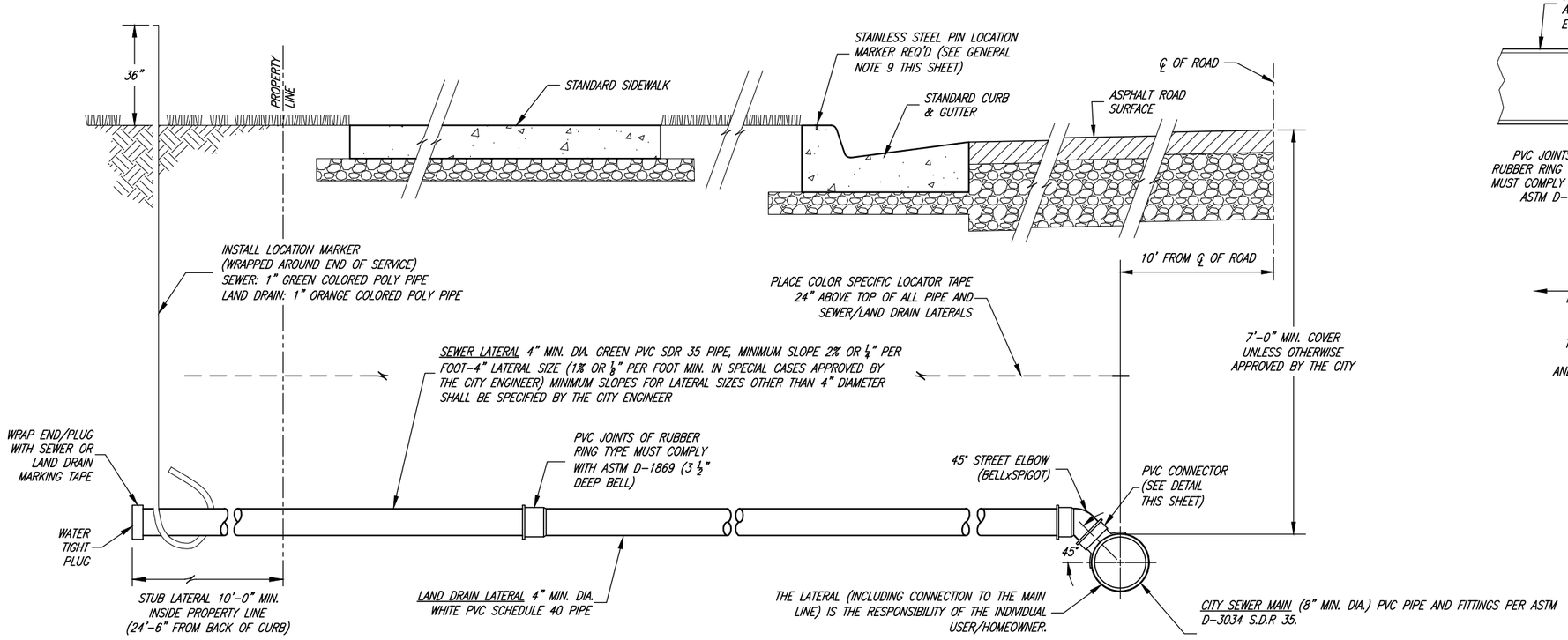

TYPICAL SEWER / LAND DRAIN LATERALS CONNECTION

REGISTERED PROFESSIONAL ENGINEER — BRANDON KENT JONES No. 5148758 — State of Utah

PROJECT ENGINEER: Brandon K. Jones

DATE: 1/10/2023

REV.	DATE	APPR.

SCALE: N.T.S.

DESIGNED BKJ
DRAWN BEB
CHECKED BKJ

JONES & ASSOCIATES — CONSULTING ENGINEERS
6080 Fashion Point Drive
South Ogden, Utah 84403 (801) 476-9767
www.jonescivil.com

SOUTH WEBER city

SOUTH WEBER CITY CORPORATION
PUBLIC WORKS - SANITARY SEWER SYSTEM STANDARDS
SEWER / LAND DRAIN LATERAL & MAIN LINE CONNECTION DETAILS

SHEET: SS1 OF 33 SHEETS
0

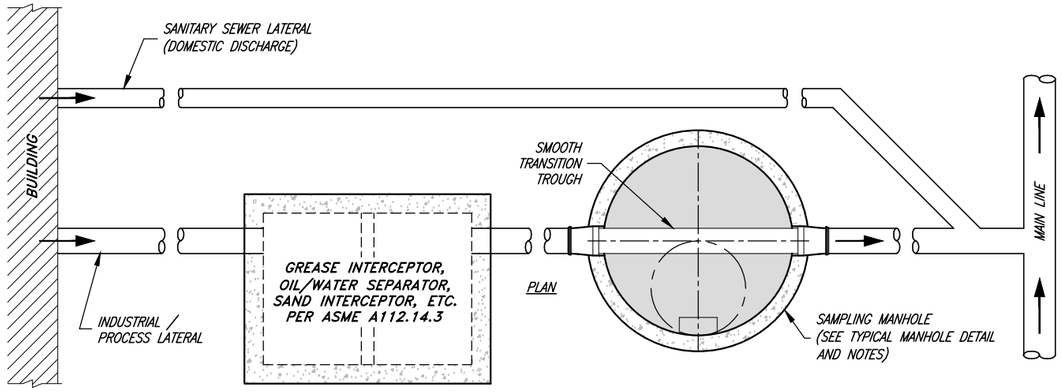

SAMPLING MANHOLE

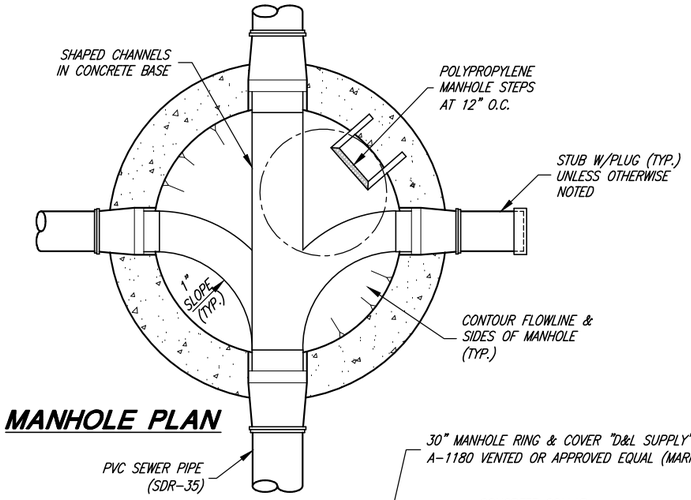

MANHOLE PLAN

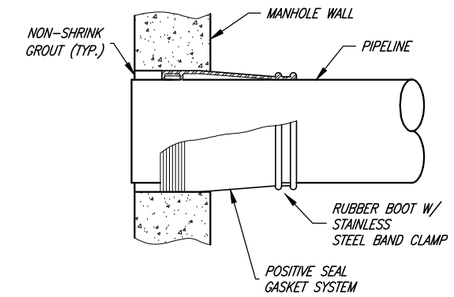

RUBBER BOOT DETAIL

DROP MANHOLE NOTES:

A. USE DROP MANHOLE ONLY WHEN DROP EXCEEDS 2'-0" (UAC R317-3)

B. DROP MANHOLE SHALL CONSIST OF ASTM D3034 SDR 35 PVC PIPE WITH SDR 35 PVC GASKETED FITTINGS.

C. DUE TO THE UNEQUAL EARTH PRESSURES THAT WOULD RESULT FROM THE BACKFILLING OPERATION IN THEVICINITY OF THE MANHOLE, THE ENTIRE OUTSIDE DROP CONNECTIONS SHALL BE ENCASED IN CONCRETE. (UAC R317-3)

D. DROP MANHOLES SHOULD BE USED ON STREETS WITH GRADES 8% OR GREATER OR AS OTHERWISE DIRECTED BY THE CITY ENGINEER.

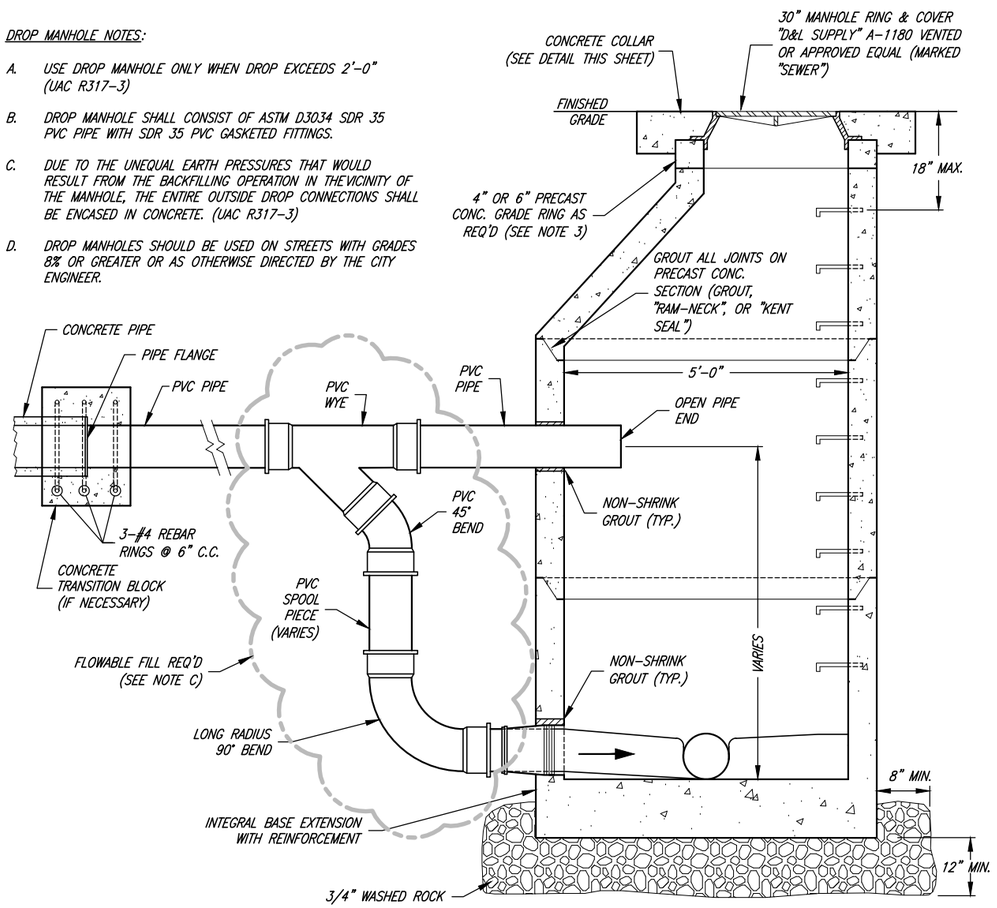

TYPICAL DROP MANHOLE SECTION

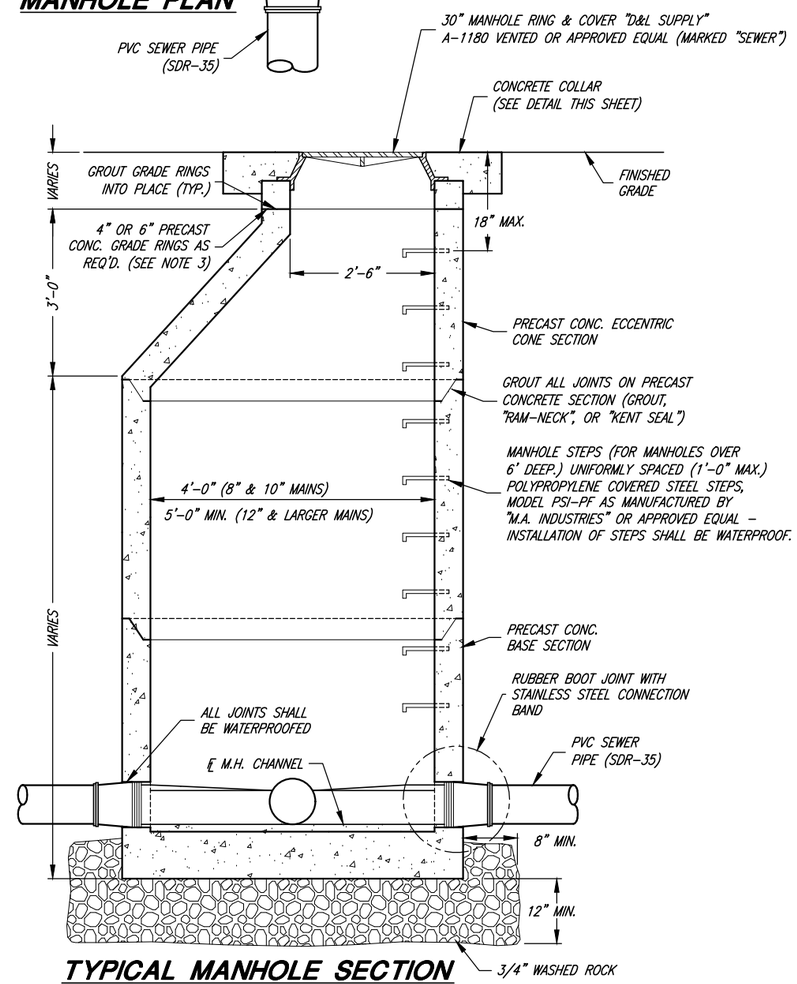

TYPICAL MANHOLE SECTION

GENERAL NOTES:

1. SECURE INVERTS IN ALL MANHOLES DURING CONSTRUCTION SO AS TO PREVENT GRAVEL AND OTHER DEBRIS FROM COLLECTING INSIDE.
2. A LARGER DIAMETER MANHOLE MAY BE REQUIRED BY THE DESIGN ENGINEER AFTER EVALUATION OF THE NUMBER, SIZE, AND ANGLE OF THE PIPES THAT CONNECT TO THE MANHOLE.
3. NO MORE THAN 12" OF GRADE RINGS TO BE ALLOWED ON ANY MANHOLE.
4. ALL TERMINATING SEWER MAINS SHALL END WITH A CITY STANDARD MANHOLE.
5. SERVICE LATERAL CONNECTIONS SHALL NOT BE ALLOWED IN SEWER MANHOLES.
6. ALL SANITARY SEWER LINES SHALL BE INSPECTED BY MEANS OF VIDEO CAMERA AND AIR TESTED WHEN CONSTRUCTED. SEE APWA 33 08 00 AND CITY MODIFICATIONS FOR MORE INFORMATION.
7. WHERE THE DIFFERENCE IN ELEVATION BETWEEN THE INCOMING SEWER AND MANHOLE INVERT IS LESS THAN 24 INCHES, THE INVERT SHOULD BE FILLETED.
8. FLAT MANHOLE RINGS & COVERS (SLAB CONSTRUCTION) ARE NOT ALLOWED ON ANY MANHOLE CONE SECTION.
9. ALL SEWER MANHOLE COVERS TO BE VENTED UNLESS OTHERWISE NOTED.

REGISTERED PROFESSIONAL ENGINEER
BRANDON KENT JONES
No. 5148758
State of Utah

PROJECT ENGINEER
1/10/2023
DATE

REV.	DATE	APPR.

SCALE: N.T.S.

DESIGNED BKJ
DRAWN BEB
CHECKED BKJ

JONES & ASSOCIATES
CONSULTING ENGINEERS
6080 Fashion Point Drive
South Ogden, Utah 84403 (801) 476-9767
www.jonescivil.com

SOUTH WEBER city

SOUTH WEBER CITY CORPORATION
PUBLIC WORKS - SANITARY SEWER SYSTEM STANDARDS

SANITARY SEWER MANHOLE DETAILS

SHEET: SS2
OF 33 SHEETS
0

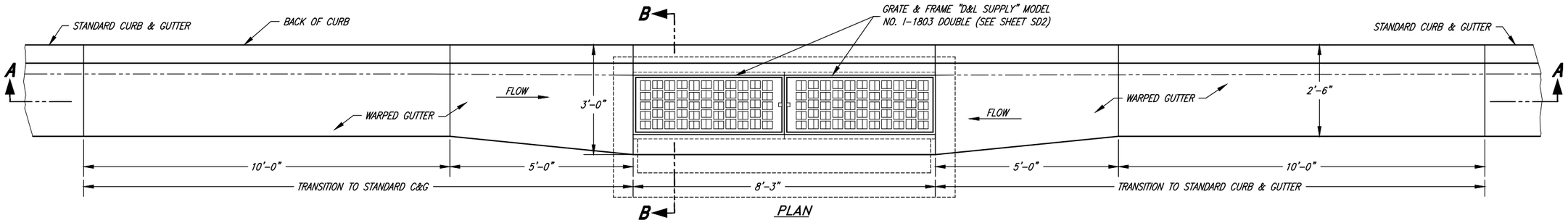

PLAN

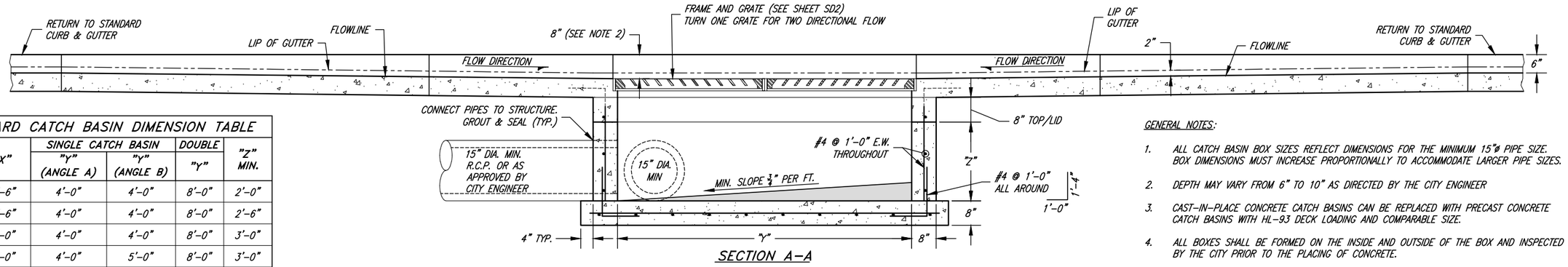

SECTION A-A

DOUBLE CATCH BASIN

STANDARD CATCH BASIN DIMENSION TABLE					
PIPE SIZE (IN.)	"X"	SINGLE CATCH BASIN "Y" (ANGLE A)	SINGLE CATCH BASIN "Y" (ANGLE B)	DOUBLE "Y"	"Z" MIN.
15	2'-6"	4'-0"	4'-0"	8'-0"	2'-0"
18	2'-6"	4'-0"	4'-0"	8'-0"	2'-6"
21	4'-0"	4'-0"	4'-0"	8'-0"	3'-0"
24	4'-0"	4'-0"	5'-0"	8'-0"	3'-0"
30	4'-0"	4'-0"	6'-0"	8'-0"	3'-6"
36	4'-0"	5'-0"	6'-0"	8'-0"	4'-0"
42	6'-0"	6'-0"	7'-0"	8'-0"	5'-0"
48	6'-0"	6'-0"	8'-0"	8'-0"	5'-6"

GENERAL NOTES:

1. ALL CATCH BASIN BOX SIZES REFLECT DIMENSIONS FOR THE MINIMUM 15"ø PIPE SIZE. BOX DIMENSIONS MUST INCREASE PROPORTIONALLY TO ACCOMMODATE LARGER PIPE SIZES.
2. DEPTH MAY VARY FROM 6" TO 10" AS DIRECTED BY THE CITY ENGINEER
3. CAST-IN-PLACE CONCRETE CATCH BASINS CAN BE REPLACED WITH PRECAST CONCRETE CATCH BASINS WITH HL-93 DECK LOADING AND COMPARABLE SIZE.
4. ALL BOXES SHALL BE FORMED ON THE INSIDE AND OUTSIDE OF THE BOX AND INSPECTED BY THE CITY PRIOR TO THE PLACING OF CONCRETE.
5. DOUBLE CATCH BASINS WILL BE REQUIRED IN LOCATIONS SPECIFIED BY THE CITY ENGINEER (TYPICALLY IN LOW SPOTS OR WHERE ADDITIONAL INLET CAPACITY IS NEEDED).
6. STORM DRAIN LINES SHALL BE 15 INCH MINIMUM DIAMETER REINFORCED CONCRETE PIPE (RCP), OF APPROPRIATE CLASS.
7. ALTERNATE STRUCTURE (E.G. COMBO BOXES) MAY BE USED WITH APPROVAL OF THE CITY ENGINEER. STRUCTURES SHALL FOLLOW APWA STANDARD PLANS AND BE A COMMON SIZE.

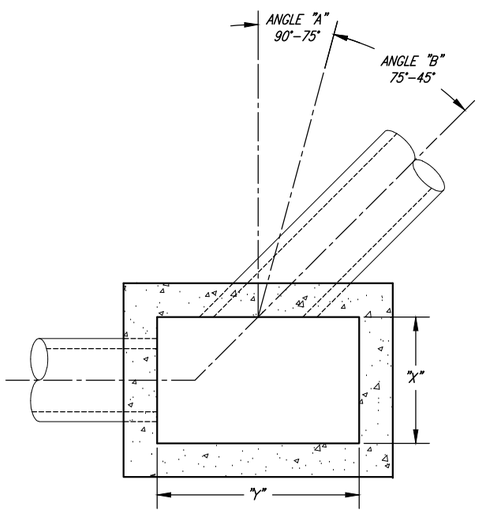

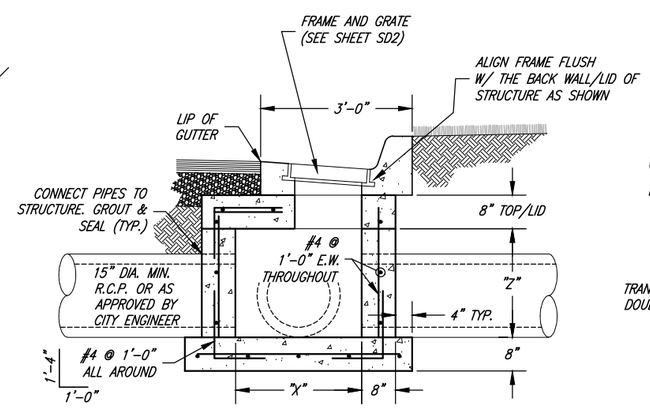

SECTION B-B

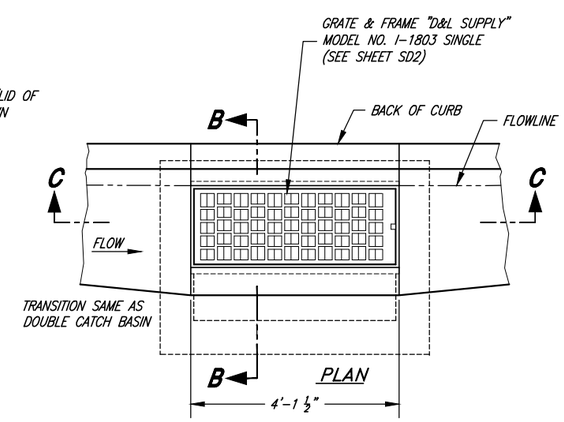

PLAN

SINGLE CATCH BASIN

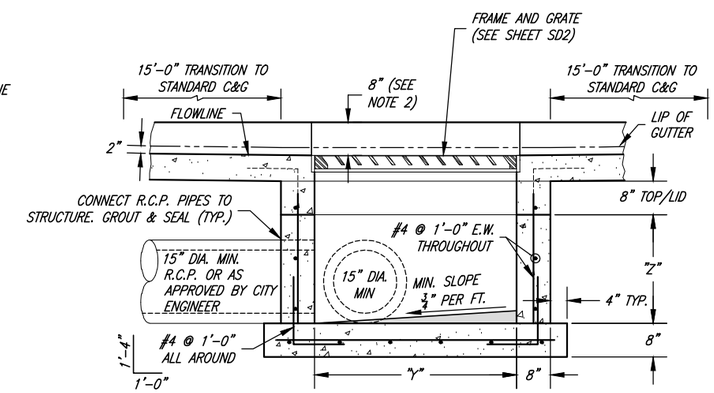

SECTION C-C

REGISTERED PROFESSIONAL ENGINEER — BRANDON KENT JONES No. 5148758 — State of Utah

PROJECT ENGINEER

1/10/2023

DATE

REV.	DATE	APPR.

SCALE: N.T.S.

DESIGNED BKJ
DRAWN BEB
CHECKED BKJ

JONES & ASSOCIATES — CONSULTING ENGINEERS
6080 Fashion Point Drive
South Ogden, Utah 84403 (801) 476-9767
www.jonescivil.com

SOUTH WEBER city

SOUTH WEBER CITY CORPORATION
PUBLIC WORKS - STORM DRAIN SYSTEM STANDARDS

SINGLE AND DOUBLE CATCH BASIN DETAILS

SHEET: SD1 OF 33 SHEETS
0

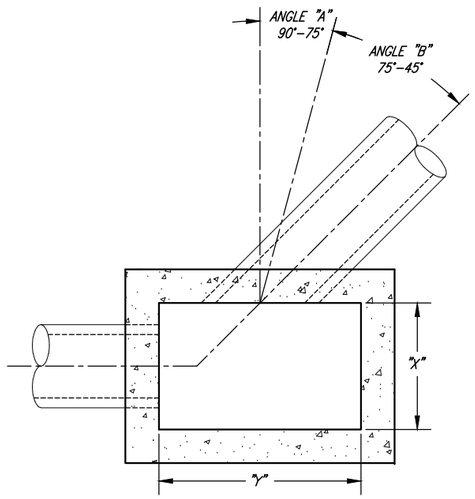

DRAINAGE DITCH INLET BOX DIMENSION TABLE				
PIPE SIZE (IN.)	"X"	INLET BOX "Y" (ANGLE A)	INLET BOX "Y" (ANGLE B)	"Z" MIN.
15	2'-6"	4'-0"	4'-0"	2'-0"
18	2'-6"	4'-0"	4'-0"	2'-6"
21	4'-0"	4'-0"	4'-0"	3'-0"
24	4'-0"	4'-0"	5'-0"	3'-0"
30	4'-0"	4'-0"	6'-0"	3'-6"
36	4'-0"	4'-0"	6'-0"	4'-0"
42	6'-0"	6'-0"	7'-0"	5'-0"
48	6'-0"	6'-0"	8'-0"	5'-6"

GENERAL NOTE:

STORM DRAIN LINES SHALL BE 15 INCH MINIMUM DIAMETER REINFORCED CONCRETE PIPE (RCP), OF APPROPRIATE CLASS.

DRAINAGE BOX NOTES:

1. ALL BOX SIZES REFLECT DIMENSIONS FOR THE MINIMUM 15"ø PIPE SIZE. BOX DIMENSIONS MUST INCREASE PROPORTIONALLY TO ACCOMMODATE LARGER PIPE SIZES. (SEE TABLE THIS SHEET)
2. CAST-IN-PLACE CONCRETE STRUCTURES CAN BE REPLACED WITH PRECAST CONCRETE STRUCTURES WITH HL-93 DECK LOADING AND COMPARABLE SIZE.
3. ALL BOXES SHALL BE FORMED ON THE INSIDE AND OUTSIDE OF THE BOX AND INSPECTED BY THE CITY PRIOR TO THE PLACING OF CONCRETE.

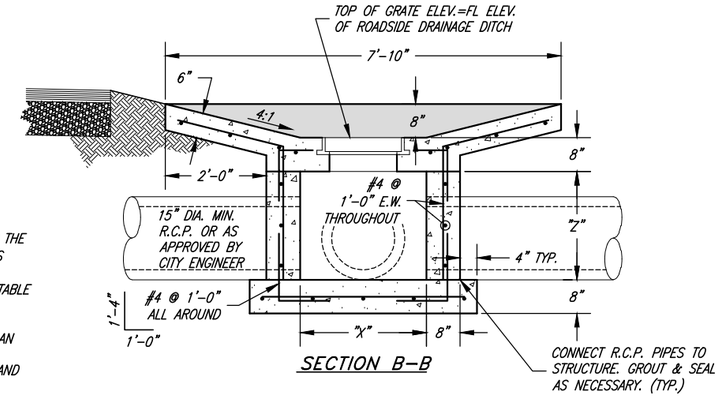

SECTION B-B

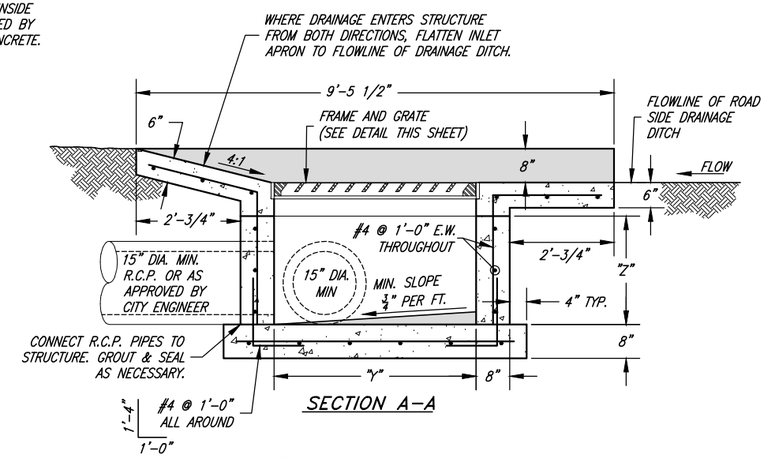

SECTION A-A

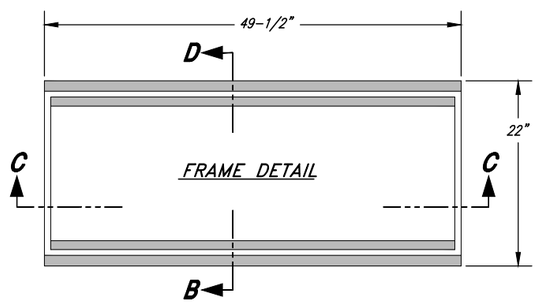

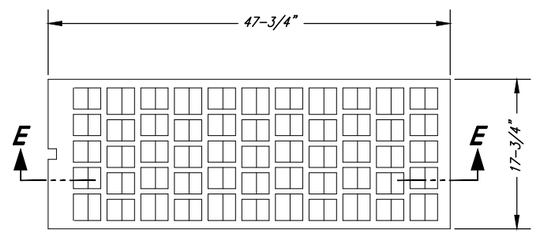

GRATE DETAIL

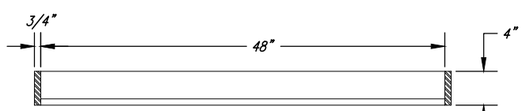

SECTION C-C

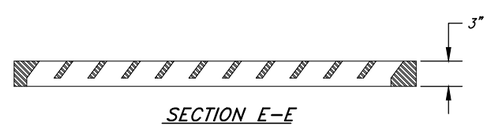

SECTION E-E

FRAME & GRATE DETAILS

FRAME AND GRATE NOTES:

A1. GRATE AND FRAME SHALL BE AS MANUFACTURED BY "D&L SUPPLY" I-1803

B1. BICYCLE SAFE GRATE REQUIRED.

C1. "OR EQUAL" GRATES AND FRAMES WILL BE CONSIDERED AS APPROVED BY THE CITY ENGINEER.

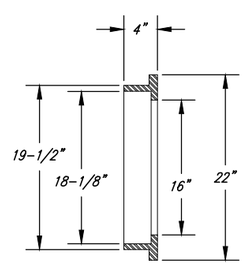

SECTION D-D

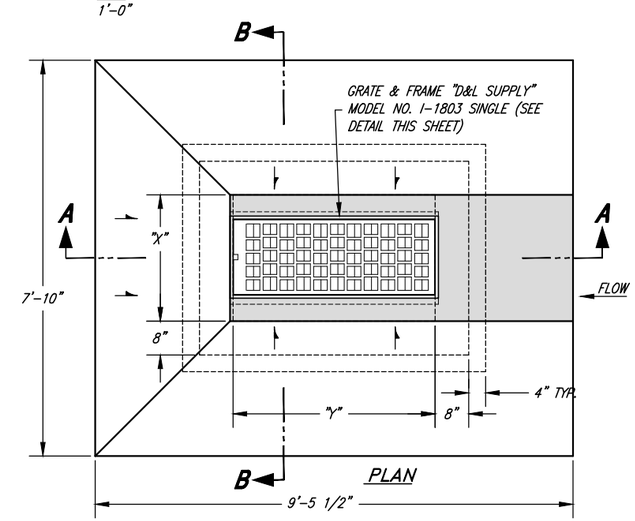

PLAN

DRAINAGE DITCH / SWALE INLET BOX

REGISTERED PROFESSIONAL ENGINEER
BRANDON KENT JONES
No. 5148758
State of Utah

PROJECT ENGINEER
1/10/2023
DATE

REV.	DATE	APPR.

SCALE: N.T.S.

DESIGNED BKJ
DRAWN BEB
CHECKED BKJ

JONES & ASSOCIATES
CONSULTING ENGINEERS
6080 Fashion Point Drive
South Ogden, Utah 84403 (801) 476-9767
www.jonescivil.com

SOUTH WEBER city

SOUTH WEBER CITY CORPORATION
PUBLIC WORKS - STORM DRAIN SYSTEM STANDARDS
DRAINAGE INLET BOX AND GENERAL GRATE & FRAME DETAILS

SHEET: SD2
OF 33 SHEETS
0

PIPE SIZES											
M.H. SIZE	IN-LINE M.H.	JUNCTION MANHOLE (ANGLE / ARC DISTANCE)									
	180°	90°	85°	80°	75°	70°	65°	60°	55°	50°	45°
4'ø M.H.	15"-24"	15"-18"	15"-18"	15"	15"	--	--	--	--	--	--
5'ø M.H.	27"-30"	21"-24"	21"-24"	18"-21"	18"-21"	15"-18"	15"-18"	15"	--	--	--
6'ø M.H.	36"-48"	27"-30"	27"-30"	24"-27"	24"	21"-24"	21"	18"	15"-18"	15"	--
7'ø M.H.	54"	36"	36"	30"	27"-30"	27"	24"	21"-24"	21"	18"	15"
8'ø M.H.	60"	42"	42"	36"	36"	30"	27"-30"	27"	24"	21"	18"

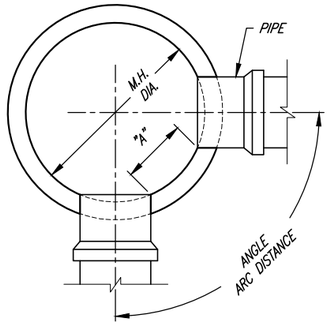

MANHOLE SIZING NOTES:

1. SUGGESTED "A" DISTANCE IS 6" OR GREATER FOR 48", 60" AND 72" DIAMETER MANHOLES
2. SUGGESTED "A" DISTANCE IS 8" OR GREATER FOR 84" AND 96" DIAMETER MANHOLES

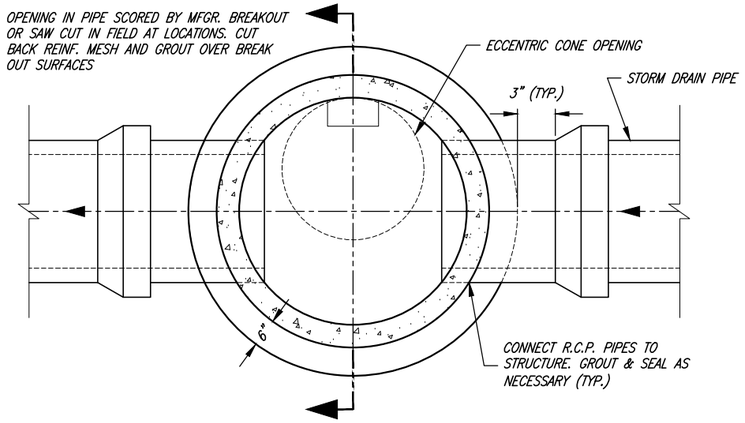

TYPICAL LINE MANHOLE

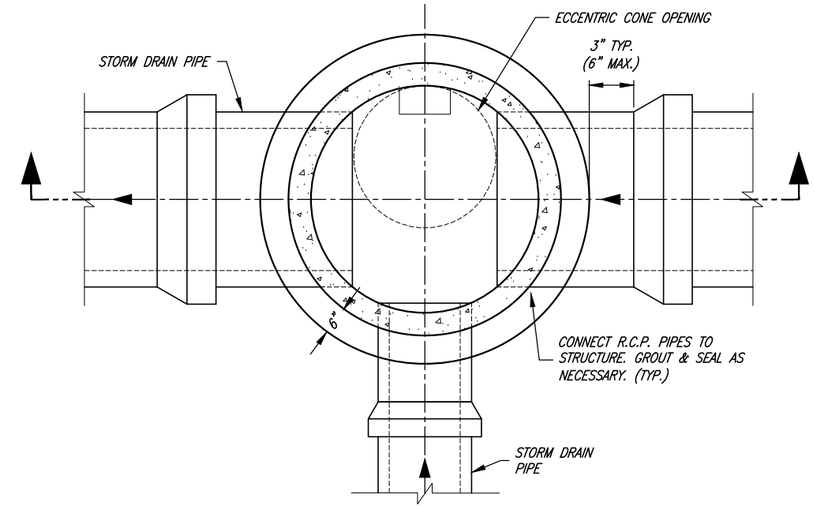

TYPICAL JUNCTION MANHOLE

GENERAL NOTES:

A. STORM DRAIN MANHOLE DIAMETER TO BE DETERMINED BY THE DESIGN ENGINEER AFTER EVALUATION OF THE NUMBER, SIZE, AND PIPE ENTRY ANGLE OF THE PIPES THAT CONNECT TO THE MANHOLE.

B. NO MORE THAN 12" OF GRADE RINGS TO BE ALLOWED ON ANY MANHOLE

C. PLYWOOD COVERS SHALL BE USED AT MANHOLE FLOOR TO COVER FLOWLINE DURING CONSTRUCTION AND MAINTENANCE ACTIVITIES.

D. ALL INTERIOR JOINTS SHALL BE SMOOTH AND EVENLY GROUTED WITH NON-SHRINK GROUT MIX.

E. MANHOLE STEPS UNIFORMLY SPACED (1'-0" MAX) ON ALL MANHOLES. POLYPROPYLENE COVERED STEEL STEPS, MODEL PSI-PF AS MANUFACTURED BY "M.A. INDUSTRIES" OR APPROVED EQUAL - INSTALLATION OF STEPS SHALL BE WATERPROOF.

F. STORM DRAIN LINES SHALL BE 15 INCH MINIMUM DIAMETER REINFORCED CONCRETE PIPE (RCP), OF APPROPRIATE CLASS.

G. FLAT MANHOLE RINGS & COVERS (SLAB CONSTRUCTION) ARE NOT ALLOWED ON ANY MANHOLE CONE SECTION.

H. THE USE OF STORM DRAIN UTILITY VAULTS (BOXES) WITH STD. 30" C.I. RING & COVER ("D&L SUPPLY" A-1181 MARKED "STORM DRAIN") AND A CONCRETE COLLAR IS ACCEPTED WHEN APPROVED BY THE CITY ENGINEER.

I. CONTOUR THE FLOWLINE & SIDES OF ANY LINE OR JUNCTION MANHOLES WHEN DIRECTED BY THE CITY ENGINEER.

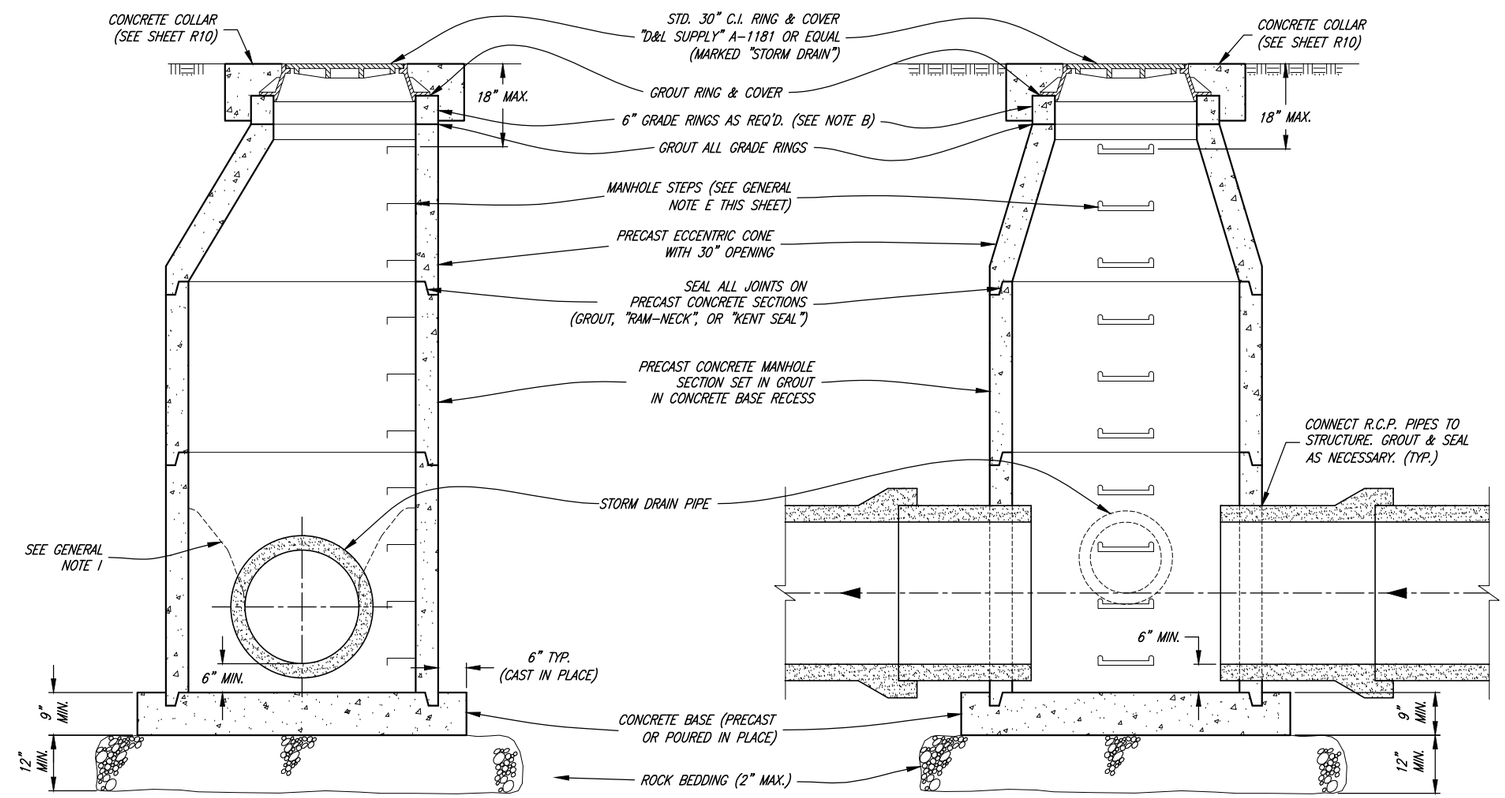

REGISTERED PROFESSIONAL ENGINEER
BRANDON KENT JONES
No. 5148758
State of Utah

PROJECT ENGINEER
1/10/2023
DATE

REV.	DATE	APPR.

SCALE: N.T.S.

DESIGNED BKJ
DRAWN BEB
CHECKED BKJ

JONES & ASSOCIATES
CONSULTING ENGINEERS
6080 Fashion Point Drive
South Ogden, Utah 84403 (801) 476-9767
www.jonescivil.com

SOUTH WEBER city

SOUTH WEBER CITY CORPORATION
PUBLIC WORKS - STORM DRAIN SYSTEM STANDARDS

STORM DRAIN MANHOLE DETAILS

SHEET: SD3
OF 33 SHEETS
0

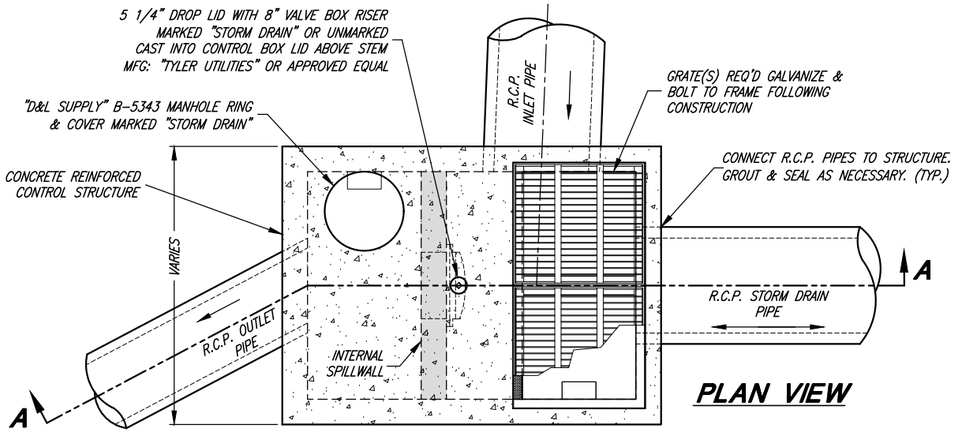

PLAN VIEW

DETENTION INLET/OUTLET CONTROL STRUCTURE

(PRECAST OR CAST-IN-PLACE)

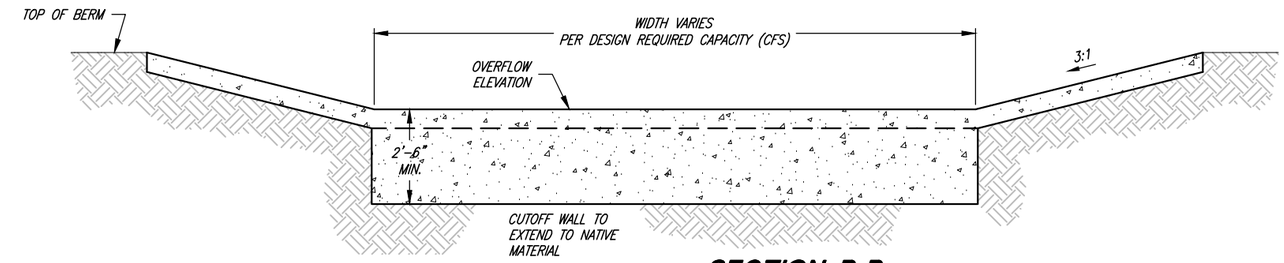

SECTION B-B

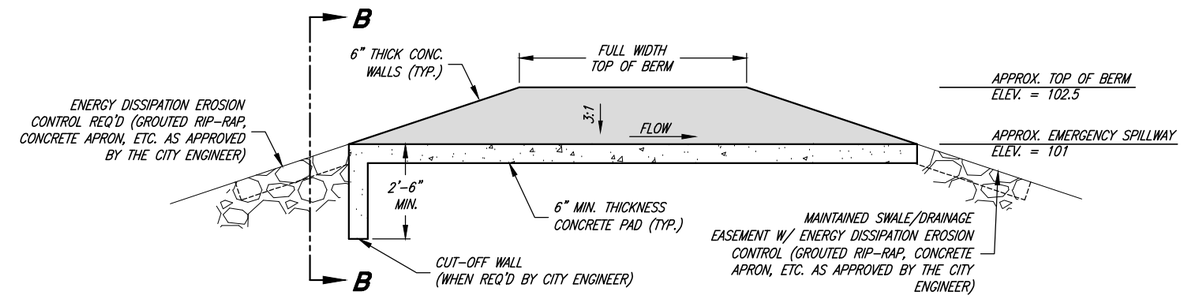

EMERGENCY OVERFLOW

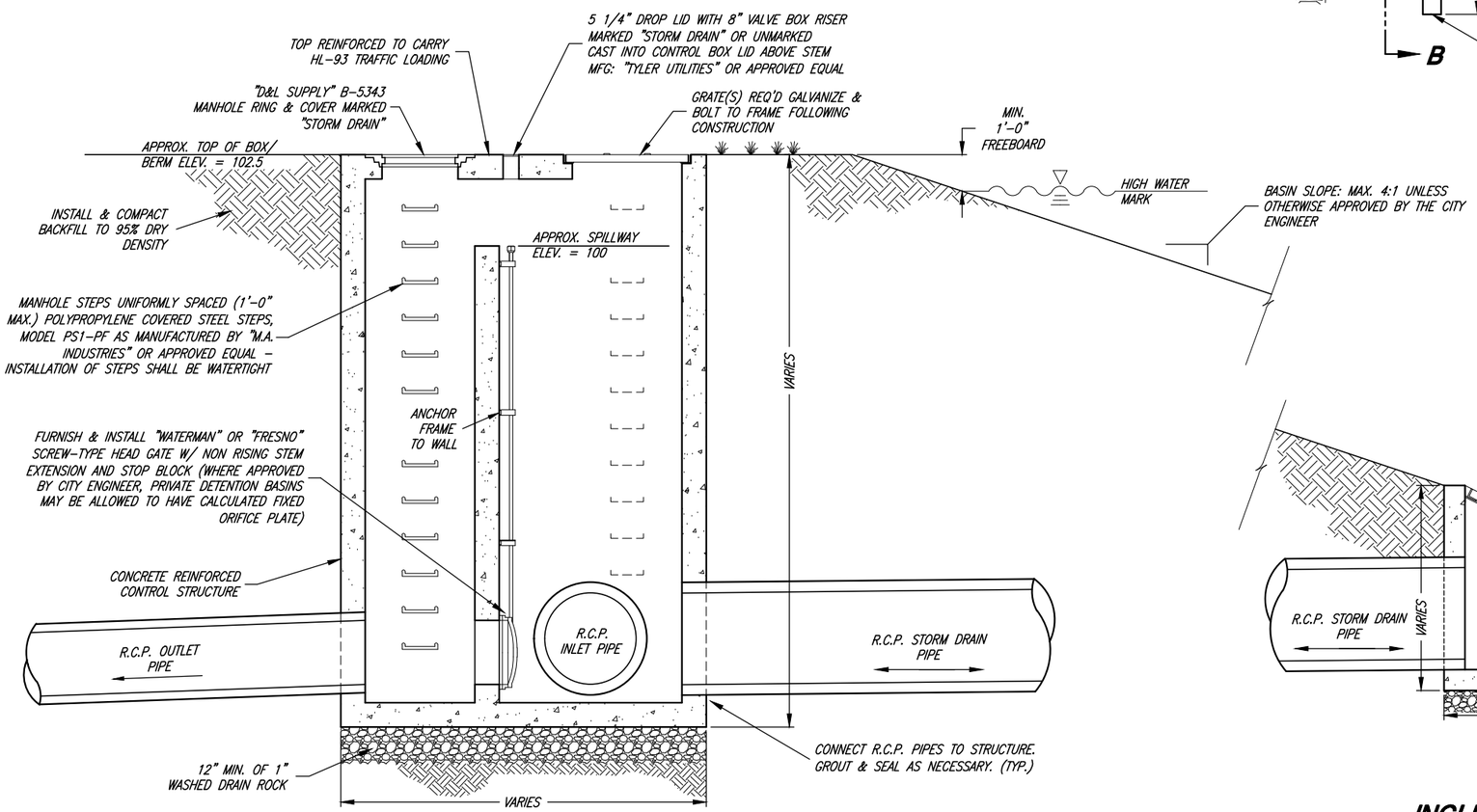

SECTION A-A

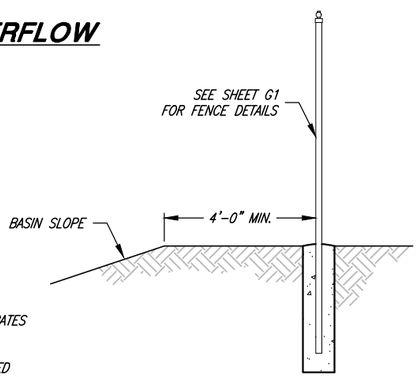

FENCE LOCATION DETAIL

(WHEN FENCE IS REQUIRED BY CITY)

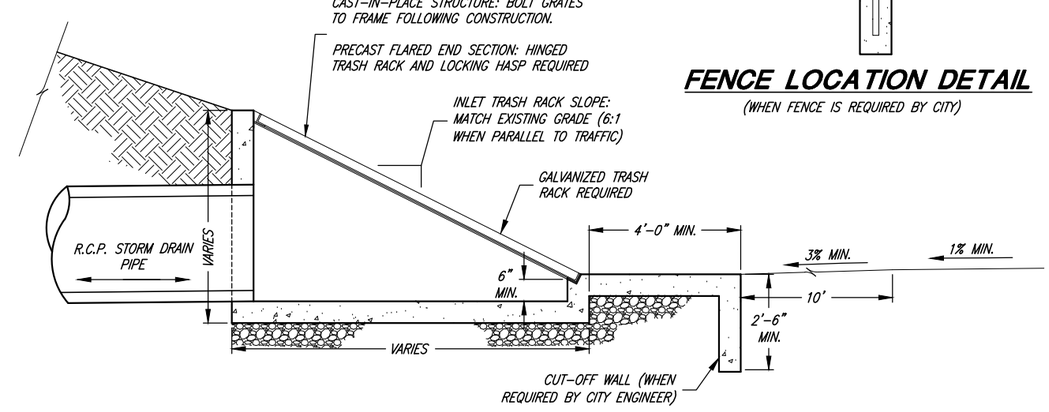

INCLINED GRATE STORM DRAIN INLET

**INCLINED GRATES ARE REQ'D ON ALL PIPES/INLETS WHERE OPEN CHANNELS, DITCHES, OR PONDS DISCHARGE DIRECTLY INTO THE STORM DRAIN SYSTEM.

GENERAL AND STRUCTURAL NOTES:
SEE SHEET SD5

REGISTERED PROFESSIONAL ENGINEER — BRANDON KENT JONES No. 5148758 — State of Utah

PROJECT ENGINEER: Brandon K. Jones
DATE: 1/10/2023

REV.	DATE	APPR.

SCALE: N.T.S.

DESIGNED BKJ
DRAWN BEB
CHECKED BKJ

JONES & ASSOCIATES — CONSULTING ENGINEERS
6080 Fashion Point Drive
South Ogden, Utah 84403 (801) 476-9767
www.jonescivil.com

SOUTH WEBER city

SOUTH WEBER CITY CORPORATION
PUBLIC WORKS - STORM DRAIN SYSTEM STANDARDS
LARGE DETENTION BASIN DETAILS

SHEET: SD4 OF 33 SHEETS
0

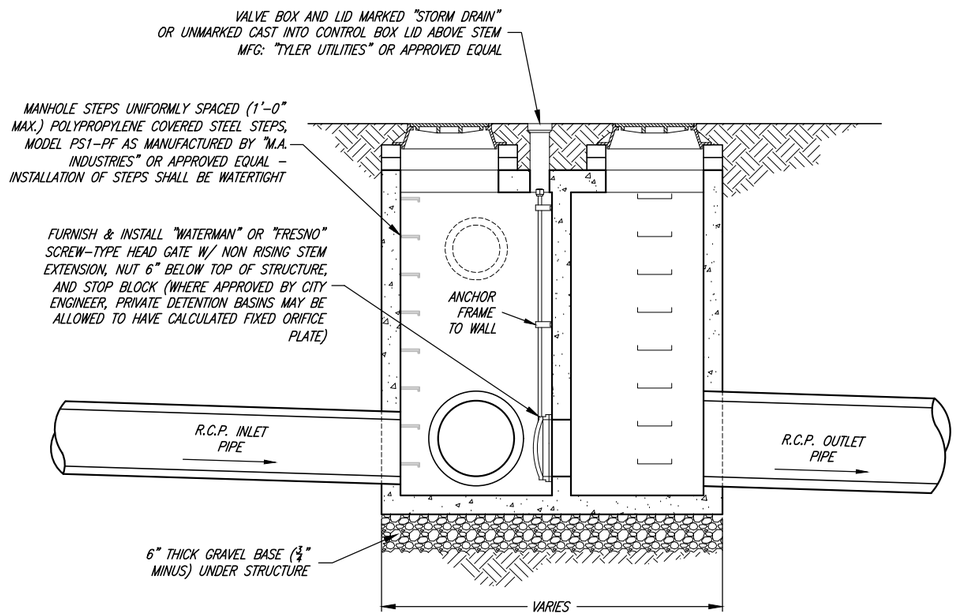

SECTION B-B

GENERAL NOTES:

1. ALL BASINS REGARDLESS OF LOCAL OR REGIONAL SHALL BE DESIGNED TO ACCOMMODATE A 100 YEAR STORM EVENT.
2. A DAM SAFETY (UTAH DIVISION OF WATER RIGHTS) HAZARD PERMIT MAY BE REQUIRED.
3. STRUCTURE DESIGN AND FLOW CALCULATIONS MUST BE APPROVED BY CITY ENGINEER PRIOR TO CONSTRUCTION.
4. STORM DRAIN LINES SHALL BE 15 INCH MINIMUM DIAMETER REINFORCED CONCRETE PIPE (RCP), OF APPROPRIATE CLASS.
5. THE SURFACE AREA OF THE BASIN SHALL BE SODDED AND SHALL BE PROVIDED WITH AN AUTOMATED SPRINKLER SYSTEM APPROVED BY THE CITY ENGINEER.
6. GRATES SHALL BE REMOVABLE FOR MAINTENANCE PURPOSES
7. GRATES SHALL BE HOT DIPPED GALVANIZED WITH BARS AT MAXIMUM 3 INCH SPACING.
8. LOW FLOWS MUST BE PIPED CONTINUOUSLY TO THE CONTROL STRUCTURE. NO OPEN FLOW IS PERMITTED THROUGH THE BASIN.
9. INCLINED GRATES ARE REQUIRED ON ALL PIPES/INLETS WHERE OPEN CHANNELS, DITCHES, OR PONDS DISCHARGE DIRECTLY INTO THE STORM DRAIN SYSTEM.
10. AN INTERNAL SPILLWAY MAY BE CONSTRUCTED INSIDE THE STRUCTURE DEPENDING ON SITE CONDITIONS AND ELEVATIONS.
11. BASIN STRUCTURES ARE DETERMINED BY THE SIZE OF THE DETENTION BASIN OR AS REQUIRED BY THE CITY ENGINEER. (SEE SHEET SD4 OR SD5)
    a. SMALL DETENTION BASIN: LESS THAN OR EQUAL TO 1 ACRE FOOT
    b. LARGE DETENTION BASIN: GREATER THAN 1 ACRE FOOT

STRUCTURAL NOTES:

A. PRECAST CONCRETE STRUCTURE CAN BE REPLACED WITH CAST-IN-PLACE CONCRETE VAULT. SUBMIT ENGINEERED CONSTRUCTION PLANS WITH REBAR DETAILS TO CITY ENGINEER FOR REVIEW AND ACCEPTANCE PRIOR TO CONSTRUCTION.

B. ADD REINFORCEMENT AROUND OPENINGS EQUAL TO REINFORCEMENT DISPLACED BY OPENING.

C. THE PRECAST VAULT MANUFACTURER IS RESPONSIBLE FOR DESIGN RELATED TO TRAFFIC LOADING AND THRUST. VERIFICATION OF PROPER DESIGN MUST BE PROVIDED TO THE CITY BY THE DEVELOPER, CONTRACTOR, OR PROPERTY OWNER AS THE CASE MAY BE.

D. REINFORCEMENT TO CONFORM WITH ASTM A 615 GRADE 60

E. CONCRETE SHALL HAVE A 28-DAY COMPRESSIVE STRENGTH OF 5,000 PSI

F. USE AN AIR-ENTRAINING AGENT ON ALL CONCRETE EXPOSED TO THE WEATHER.

G. HL-93 LOADING

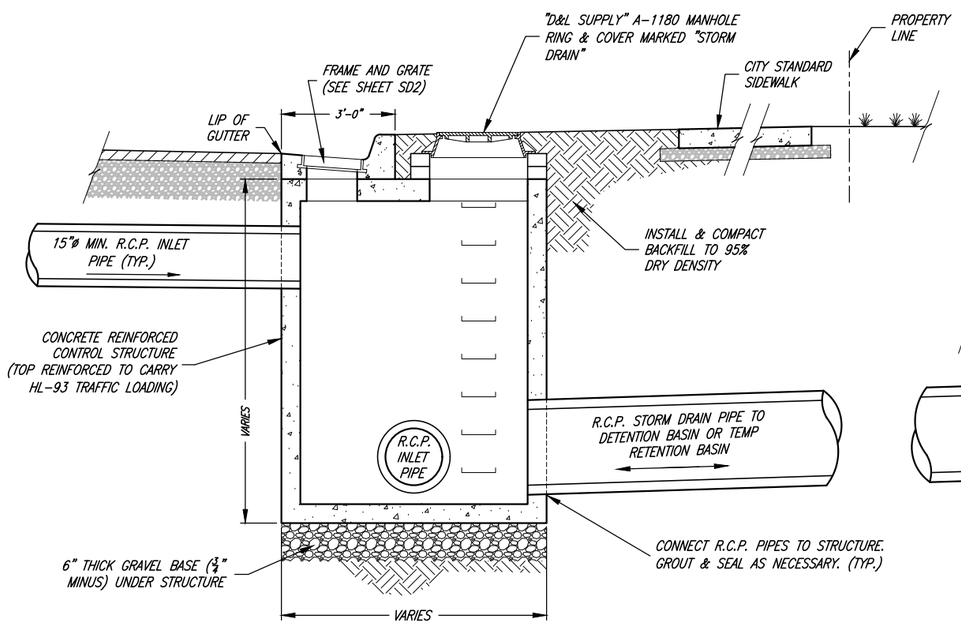

SECTION A-A

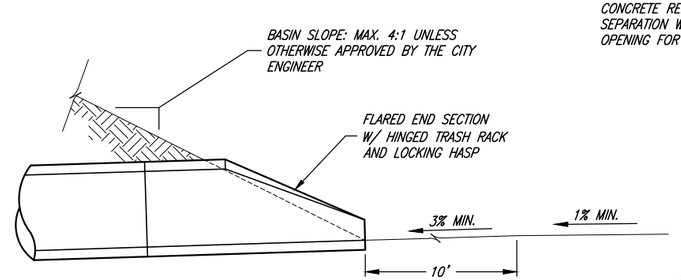

EMERGENCY OVERFLOW AND FENCE LOCATION DETAIL : SEE SHEET SD4

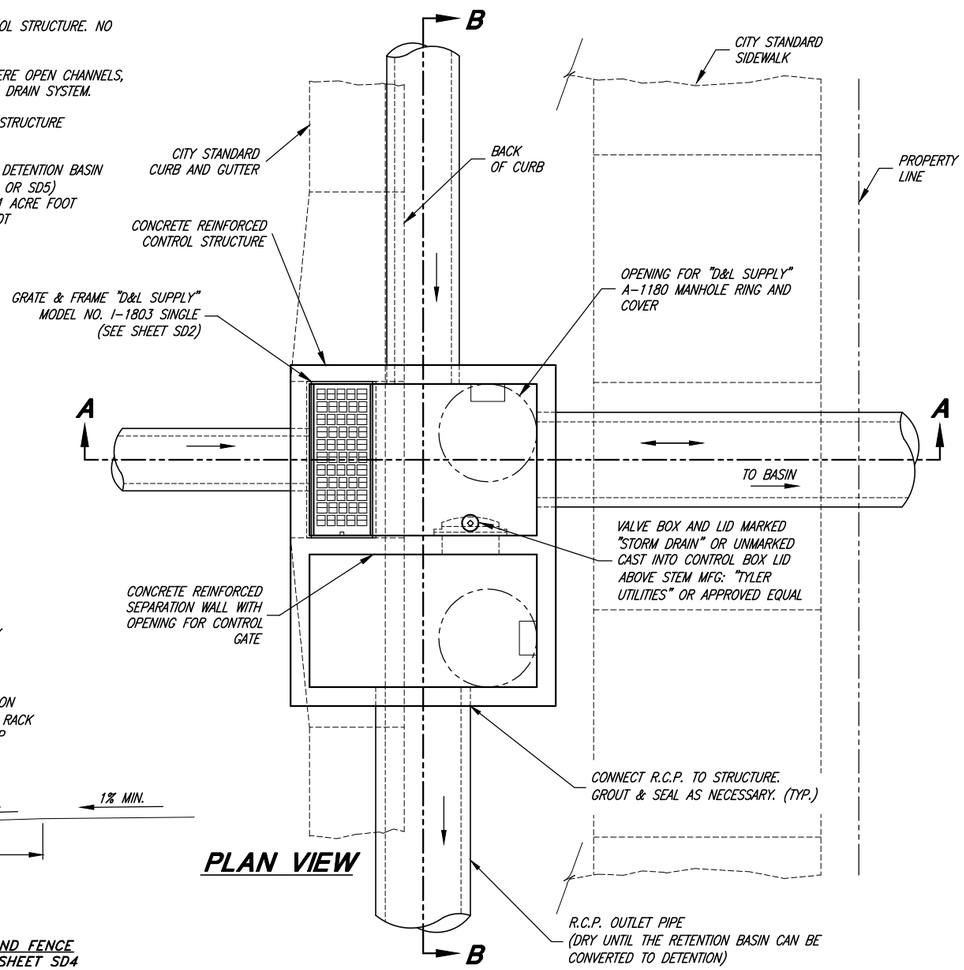

PLAN VIEW

INLET/OUTLET CONTROL STRUCTURE

(PRECAST OR CAST-IN-PLACE)

REGISTERED PROFESSIONAL ENGINEER — BRANDON KENT JONES No. 5148758 — State of Utah

PROJECT ENGINEER: Brandon K. Jones

DATE: 1/10/2023

REV.	DATE	APPR.

SCALE: N.T.S.

DESIGNED BKJ
DRAWN BEB
CHECKED BKJ

JONES & ASSOCIATES — CONSULTING ENGINEERS
6080 Fashion Point Drive
South Ogden, Utah 84403 (801) 476-9767
www.jonescivil.com

SOUTH WEBER city

SOUTH WEBER CITY CORPORATION
PUBLIC WORKS - STORM DRAIN SYSTEM STANDARDS

SMALL DETENTION BASIN DETAILS

SHEET: SD5 OF 33 SHEETS
0

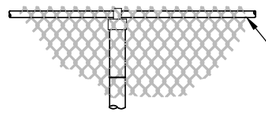

KNUCKLED SELVAGE
TYPE I

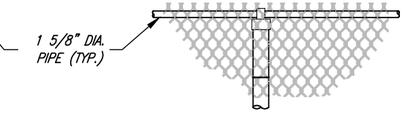

TWISTED & BARBED SELVAGE
TYPE II

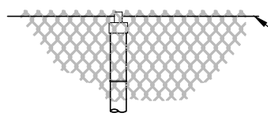

KNUCKLED SELVAGE
W/ TENSION WIRE
TYPE III

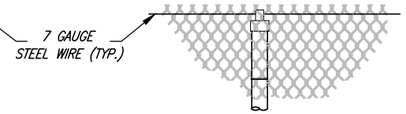

TWISTED & BARBED
SELVAGE W/ TENSION WIRE
TYPE IV

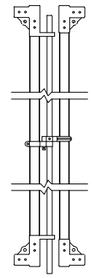

DROP ROD
ASSEMBLY

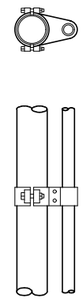

TOP GATE HINGE

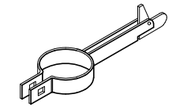

GATE KEEPER

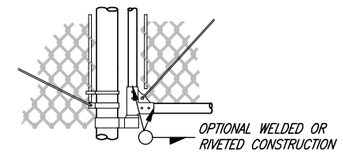

BOTTOM GATE HINGE
AND GATE DETAIL

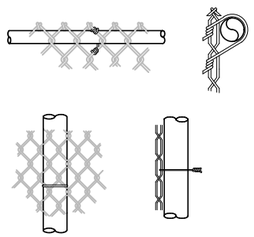

PIPE POST TIE

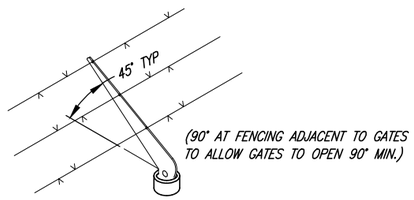

COMBINATION CAP AND
BARBED WIRE SUPPORTING ARM

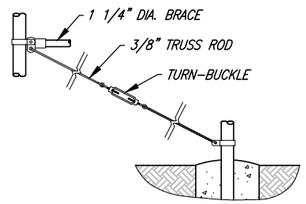

BRACE & TRUSS CONNECTIONS

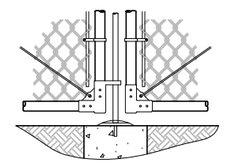

CENTER GATE STOP
AND GATE DETAIL

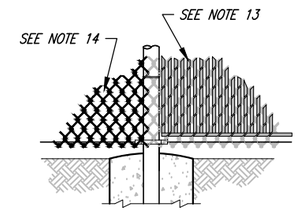

SLATS & VINYL
COATING DETAIL

GENERAL NOTES:

1. MATERIALS, CONSTRUCTION, AND WORKMANSHIP SHALL BE IN ACCORDANCE WITH PROJECT STANDARD SPECIFICATIONS.
2. THE TYPE OF TOP SUPPORT IS SPECIFIED IN THE BIDDING SCHEDULE, TYPES I AND II TUBULAR RAIL, TYPES III AND IV TENSION WIRE.
3. BARB WIRE SHALL BE USED ONLY WHEN DESIGNATED ON THE PLANS OR IN THE SPECIFICATIONS.
4. TWISTED AND BARBED SELVAGE TOP AND BOTTOM SHALL BE USED ON FENCES 5-FEET HIGH OR GREATER.
5. KNUCKLED SELVAGE ON TOP AND TWISTED AND BARBED ON BOTTOM SHALL BE USED ON FENCES LESS THAN 5-FEET.
6. ALL STEEL PIPE MEMBERS SHALL CONFORM TO ASTM A53 HOT DIPPED ZINC COATED HIGH TENSILE STEEL PIPE.
7. POSTS SHALL BE SCHEDULE 40 PIPE.
8. LINE POSTS SHALL BE LOCATED AT EQUAL SPACING FOR EACH SEGMENT WITH A MAXIMUM SPACING AS FOLLOWS:
   a. TANGENT SECTIONS TO 500-FOOT RADIUS NOT MORE THAN 8-FEET.
   b. UNDER 500-FOOT RADIUS TO 200-FOOT RADIUS NOT MORE THAN 8-FEET.
   c. UNDER 200-FOOT RADIUS TO 100-FOOT RADIUS NOT MORE THAN 6-FEET.
   d. UNDER 100-FOOT RADIUS NOT MORE THAN 5-FEET.
9. TRUSS RODS AND BRACES SHALL NOT BE REQUIRED FOR FABRIC HEIGHT LESS THAN 5-FEET.
10. TENSION WIRE SHALL BE 7 GAUGE ZINC- OR ALUMINUM-COATED COIL SPRING STEEL TENSION WIRE.
11. ALL POSTS SHALL BE SET IN 3000 PSI CONCRETE AND SHALL BE TOPPED WITH BALL TYPE OR OTHER APPROVED ORNAMENT.
12. ALL FABRIC SHALL BE 2" GALVANIZED 9 GAUGE MESH.
13. WHITE VERTICAL SEMI-PRIVACY VINYL SLATS WITH BOTTOM-LOCKING SLAT, WHEN REQUIRED BY THE CITY.
14. BLACK VINYL COATED CHAIN LINK FENCING WHEN REQUIRED BY THE CITY.
15. ALL FENCING SHALL CONFORM TO LOCATION AND HEIGHT LIMITATIONS AS STATED IN SOUTH WEBER CITY FENCING ORDINANCE.

HEIGHT	GATE OPENING	GATE POST	GATE FRAME
UNDER 6 FEET	SINGLE TO 6' OR DOUBLE TO 12'	2"	1"
	SINGLE OVER 6' TO 8' OR DOUBLE OVER 12' TO 16'	2 1/2"	1 1/2"
	SINGLE OVER 8' TO 12' OR DOUBLE 16' TO 24'	4"	
6 FEET AND OVER	SINGLE TO 6' OR DOUBLE TO 12'	3 1/2"	1 1/2"
	SINGLE OVER 6' TO 12' OR DOUBLE OVER 12' TO 24'	4"	
	SINGLE OVER 12' TO 18' OR DOUBLE OVER 24' TO 36'	6"	
	SINGLE OVER 18' OR DOUBLE OVER 36'	8"	

HEIGHT OF FABRIC	DEPTH OF POSTS	LENGTH OF END, CORNER OR PULL POST	LENGTH OF LINE POST	SIZE OF POSTS	
				END, CORNER, & PULL POSTS	LINE POST
				NOM. SIZE	NOM. SIZE
7'	3'	10'	9'-8"	2 1/2"	2"
6'	3'	9'	8'-8"	2 1/2"	2"
5'	3'	8'	7'-8"	2"	1 1/2"
4'	2'	6'	5'-8"	2"	1 1/2"
3'	2'	5'	4'-8"	2"	1 1/2"

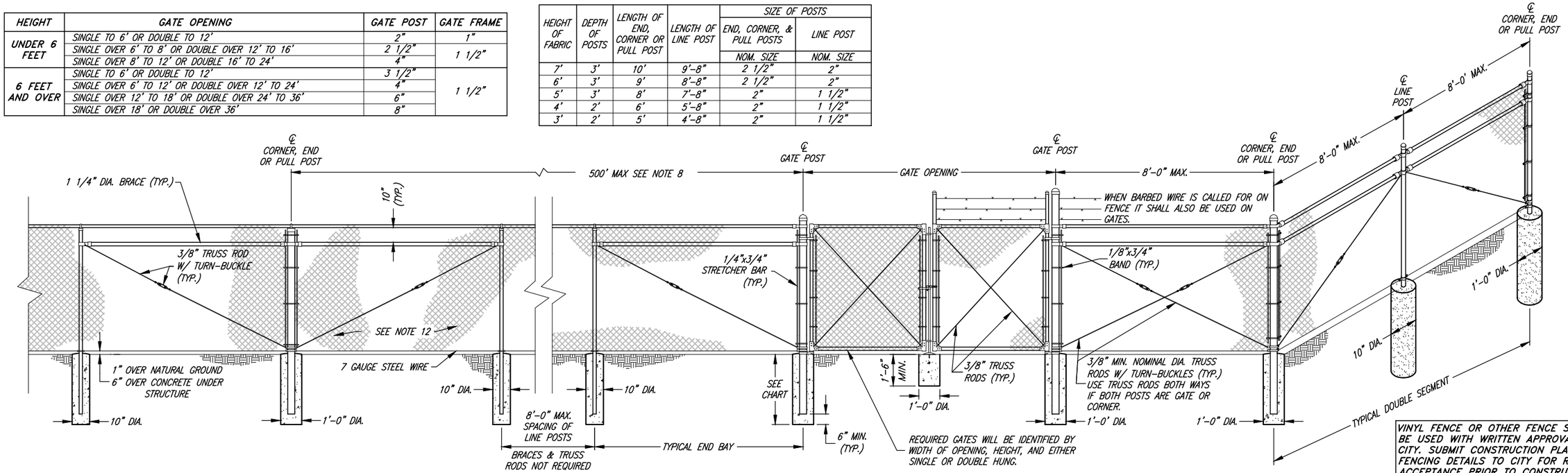

VINYL FENCE OR OTHER FENCE STYLES MAY BE USED WITH WRITTEN APPROVAL BY THE CITY. SUBMIT CONSTRUCTION PLANS AND FENCING DETAILS TO CITY FOR REVIEW AND ACCEPTANCE PRIOR TO CONSTRUCTION.

REGISTERED PROFESSIONAL ENGINEER
BRANDON KENT JONES
No. 5148758
State of Utah

PROJECT ENGINEER
1/10/2023
DATE

REV.	DATE	APPR.

SCALE: N.T.S.

DESIGNED BKJ
DRAWN BEB
CHECKED BKJ

JONES & ASSOCIATES
CONSULTING ENGINEERS
6080 Fashion Point Drive
South Ogden, Utah 84403 (801) 476-9767
www.jonescivil.com

SOUTH WEBER city

SOUTH WEBER CITY CORPORATION
PUBLIC WORKS - GENERAL CONSTRUCTION & LANDSCAPING STANDARDS

CHAIN LINK FENCE STANDARD DETAILS

SHEET: G1
OF 33 SHEETS
0

WATER EFFICIENT (WATER WISE) LANDSCAPING:

1. PURPOSE:

   THE PURPOSE OF THESE WATER EFFICIENCY STANDARDS IS TO CONSERVE THE PUBLIC'S WATER RESOURCES BY ESTABLISHING WATER CONSERVATION STANDARDS FOR OUTDOOR LANDSCAPING.

2. REFER TO **SOUTH WEBER CITY CODE TITLE 10 CHAPTER 15 – WATER EFFICIENT LANDSCAPE REQUIREMENTS**

3. "WATER WISE LANDSCAPING"

   A. LANDSCAPES IN EXISTING SINGLE-FAMILY RESIDENTIAL DEVELOPMENTS: "WATER WISE LANDSCAPING" IS RECOMMENDED BUT NOT REQUIRED.

   B. LANDSCAPES IN NEW SINGLE-FAMILY RESIDENTIAL DEVELOPMENTS: SEE CITY CODE TITLE 10 CHAPTER 15

   C. LANDSCAPES IN ALL OTHER TYPES OF DEVELOPMENTS: SEE CITY CODE TITLE 10 CHAPTER 15

4. ADDITIONAL "WATER WISE LANDSCAPING" RESOURCES: REFER TO THE FOLLOWING WEBSITES:

   a. **https://localscapes.com**

   B. **https://conservationgardenpark.org**

   C. **https://extension.usu.edu/cwel/principles**

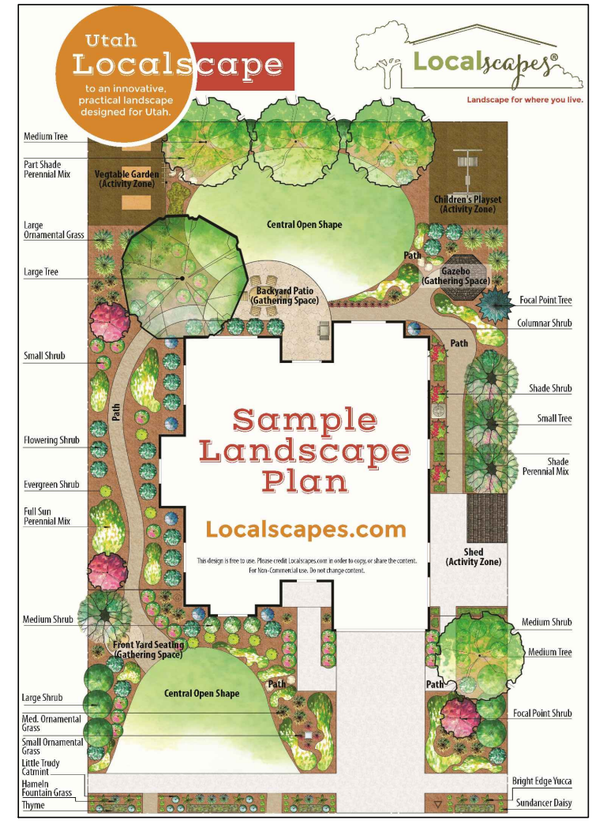

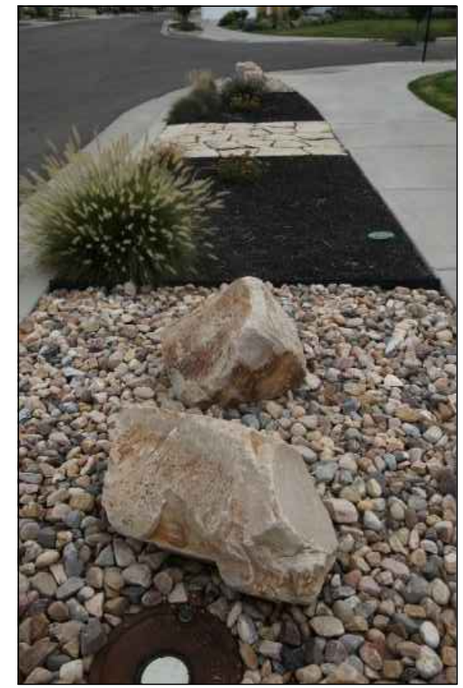

ALL WATER METERS TO BE CLEAR AND ACCESSIBLE (DO NOT BURY OR PLACE ANYTHING ON TOP OF THE METER LID)

Localscapes®

https://localscapes.com
https://conservationgardenpark.org
https://extension.usu.edu/cwel/principles

DISCLAIMER:
THE "WATER WISE LANDSCAPING" EXAMPLES SHOWN ON THIS SHEET ARE POSSIBLE RECOMMENDATIONS FOR USE WITHIN THE CITY. ANY SPECIFIC WEBSITES, COMMERCIAL PRODUCTS, PROCESS OR SERVICE BY TRADE NAME, TRADEMARK, MANUFACTURER, OR OTHERWISE, DOES NOT CONSTITUTE OR IMPLY ITS ENDORSEMENT, RECOMMENDATION, OR FAVORING BY SOUTH WEBER CITY. THE PURPOSE OF PROVIDING SPECIFIC PRODUCT INFORMATION IS TO ENSURE THAT THE HOME OWNER, CONTRACTOR AND/OR DEVELOPER HAS ALL THE APPROPRIATE INFORMATION AND REFERENCES TO ASSESS THE USEFULNESS OF THE PRODUCT.

REGISTERED PROFESSIONAL ENGINEER
BRANDON KENT JONES
No. 5148758
State of Utah

PROJECT ENGINEER
1/10/2023
DATE

REV.	DATE	APPR.	

SCALE: N.T.S.

DESIGNED BKJ
DRAWN BEB
CHECKED BKJ

JONES & ASSOCIATES
CONSULTING ENGINEERS
6080 Fashion Point Drive
South Ogden, Utah 84403 (801) 476-9767
www.jonescivil.com

SOUTH WEBER city

SOUTH WEBER CITY CORPORATION
PUBLIC WORKS - GENERAL CONSTRUCTION & LANDSCAPING STANDARDS
WATER EFFICIENT LANDSCAPING

SHEET: G2
OF 33 SHEETS
0

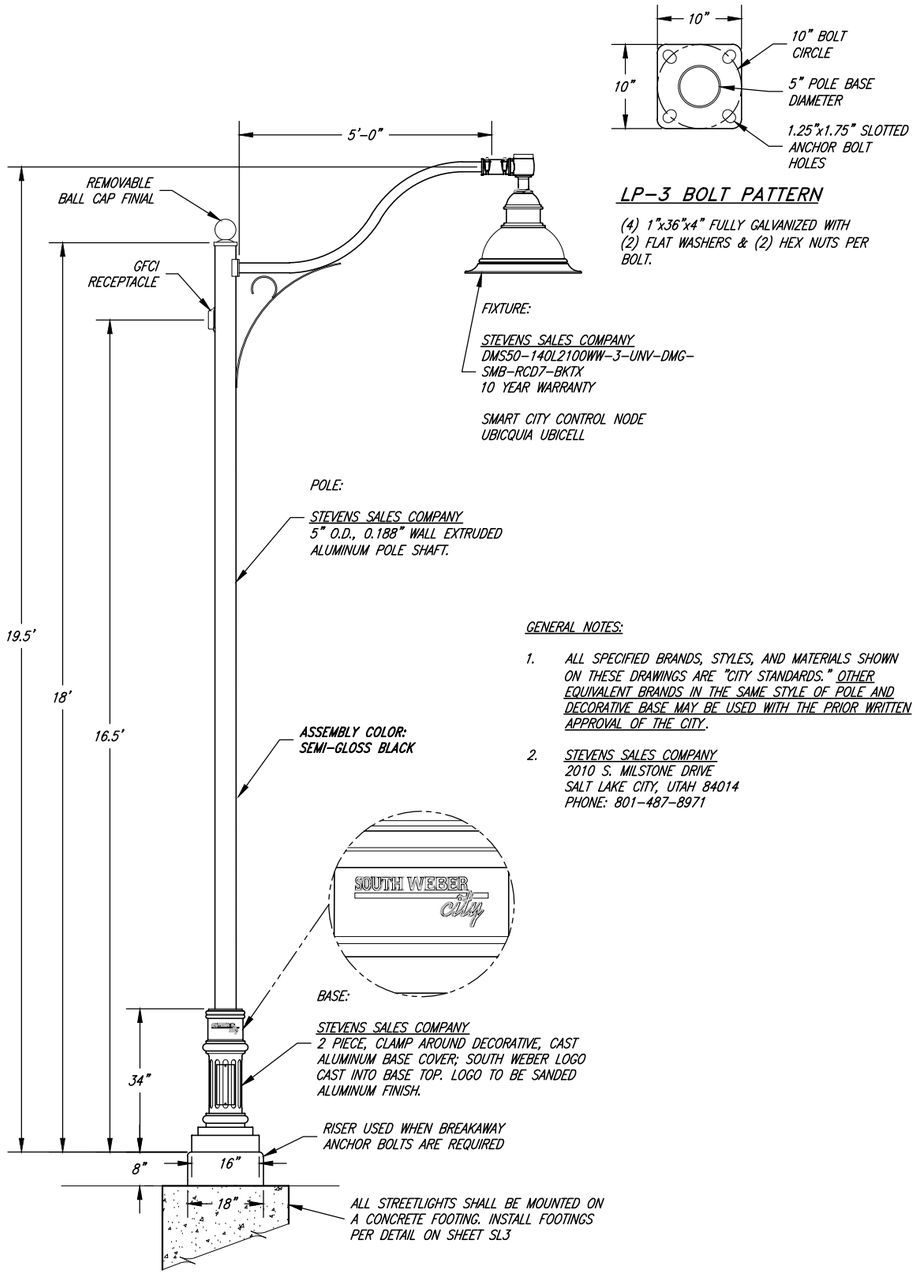

GENERAL NOTES:

1. ALL SPECIFIED BRANDS, STYLES, AND MATERIALS SHOWN ON THESE DRAWINGS ARE "CITY STANDARDS." OTHER EQUIVALENT BRANDS IN THE SAME STYLE OF POLE AND DECORATIVE BASE MAY BE USED WITH THE PRIOR WRITTEN APPROVAL OF THE CITY.
2. STEVENS SALES COMPANY
   2010 S. MILSTONE DRIVE
   SALT LAKE CITY, UTAH 84014
   PHONE: 801-487-8971

LP-3 CORRIDOR STREETLIGHT

A. ALL HARDWARE STAINLESS STEEL
B. ALL WELDS IN ACCORDANCE WITH AWS WELDING CODE
C. ENTIRE ASSEMBLY FINISH COATED SEMI-GLOSS BLACK PER CITY SPECIFICATIONS

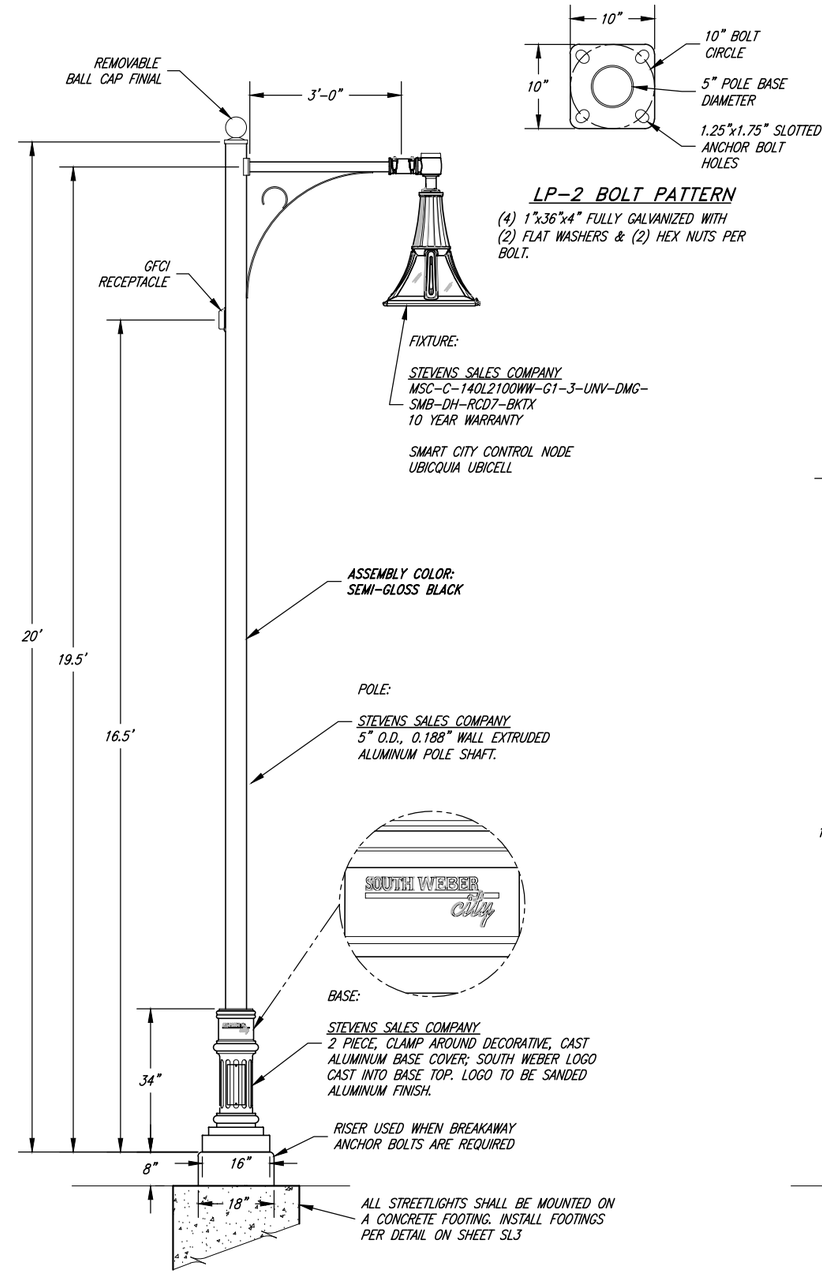

LP-2 INTERSECTION STREETLIGHT

A. ALL HARDWARE STAINLESS STEEL
B. ALL WELDS IN ACCORDANCE WITH AWS WELDING CODE
C. ENTIRE ASSEMBLY FINISH COATED SEMI-GLOSS BLACK PER CITY SPECIFICATIONS

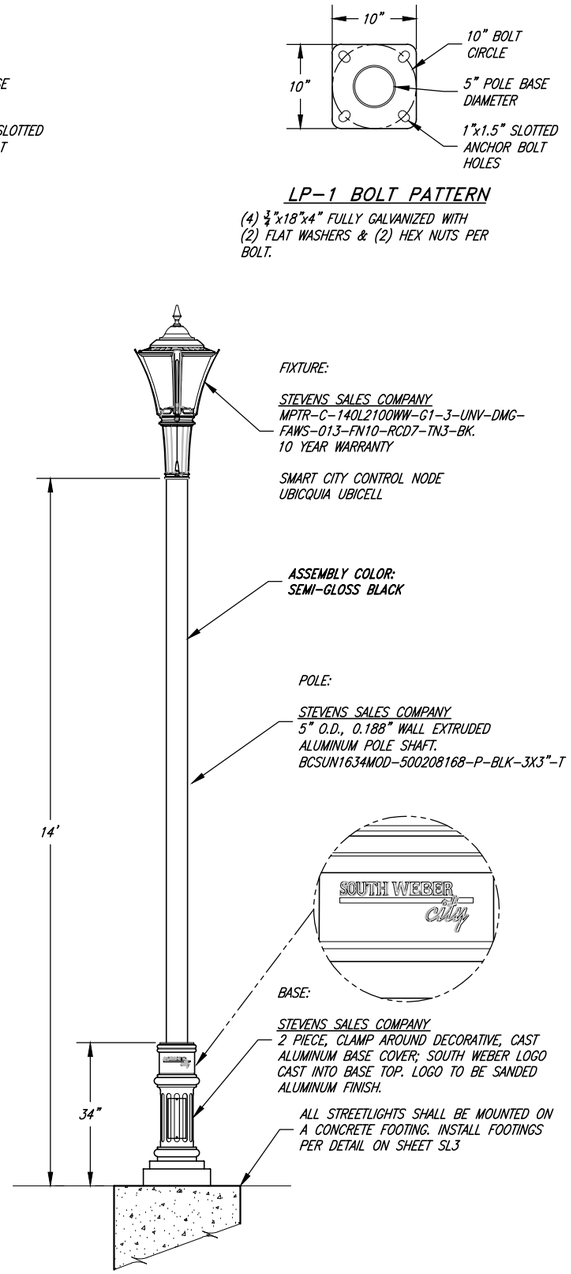

LP-1 RESIDENTIAL STREETLIGHT

A. ALL HARDWARE STAINLESS STEEL
B. ALL WELDS IN ACCORDANCE WITH AWS WELDING CODE
C. ENTIRE ASSEMBLY FINISH COATED SEMI-GLOSS BLACK PER CITY SPECIFICATIONS

REGISTERED PROFESSIONAL ENGINEER
BRANDON KENT JONES
No. 5148758
State of Utah

PROJECT ENGINEER
1/10/2023
DATE

REV.	DATE	APPR.	

SCALE: N.T.S.

DESIGNED BKJ
DRAWN BEB
CHECKED BKJ

JONES & ASSOCIATES
CONSULTING ENGINEERS
6080 Fashion Point Drive
South Ogden, Utah 84403 (801) 476-9767
www.jonescivil.com

SOUTH WEBER CITY CORPORATION
PUBLIC WORKS - STREET LIGHTING STANDARDS
POLES AND FIXTURES

SHEET: SL1
OF 33 SHEETS
0

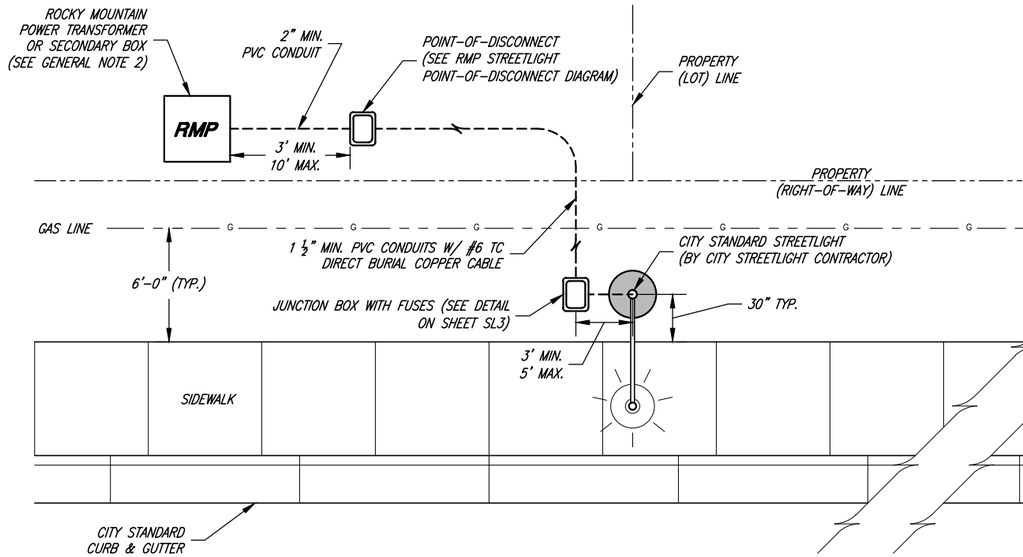

TYPICAL CONDUIT AND POWER LAYOUT "B"

(STANDARD LOCAL STREET SECTION WITHOUT PARKSTRIP)

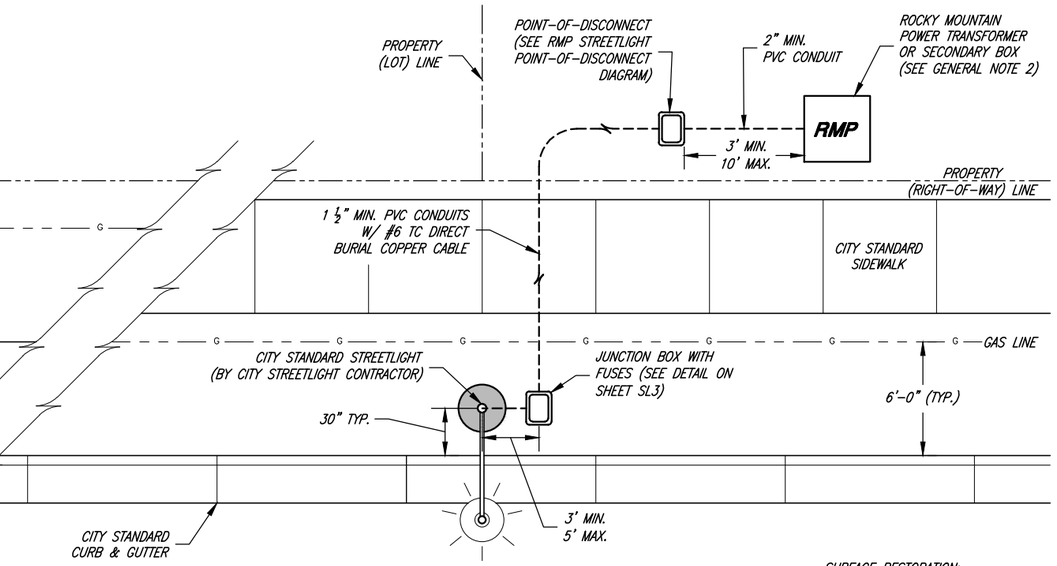

TYPICAL CONDUIT AND POWER LAYOUT "A"

(STANDARD LOCAL STREET SECTION WITH PARKSTRIP)

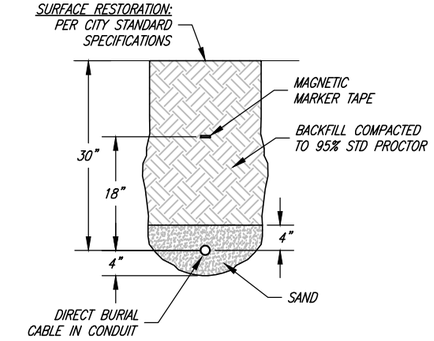

TYPICAL TRENCH DETAIL

GENERAL NOTES:

1. FOR THE STREETLIGHT DESIGN STANDARDS AND SPECIFICATIONS REFER TO THE APPLICABLE SECTIONS IN THE SOUTH WEBER CITY DEVELOPMENT, DESIGN & CONSTRUCTION STANDARDS.
2. DEVELOPER/CONTRACTOR SHALL CONSULT THE POWER COMPANY ON THE JUNCTION BOX LOCATION, PEDESTAL LOCATION, CONDUIT LOCATION, AND DIGGING PRIOR TO INSTALLATION.
3. WHERE POSSIBLE, LOCATE STREETLIGHT CONDUIT PARALLEL WITH RMP CONDUIT.
4. JUNCTION BOX CONNECTING TO STREETLIGHT MAY ALSO SERVE AS POINT-OF-DISCONNECT IF LOCATED WITHIN 10' FROM THE POWER SOURCE.

GENERAL NOTES CONT.:

5. INGROUND BOXES LOCATED WITHIN 20' OF APPROACHES OR INTERSECTIONS SHALL BE TRAFFIC RATED. WHERE APPROVED BY THE CITY ENGINEER, ANY BOX INSTALLATION IN SIDEWALK OR CONCRETE WILL REQUIRE THE GROUND BOX TO BE DESIGNED AND LISTED FOR USE IN CONCRETE. SUBMIT BOX SPECIFICATIONS TO CITY ENGINEER FOR APPROVAL PRIOR TO INSTALLATION. ALL BOXES SHALL HAVE THE WORDS "SOUTH WEBER STREET LIGHTING" ON THE COVER.
6. FLAT PULL LINE CAPABLE OF WITHSTANDING 1000 LBS OF TENSION, INSTALLED WITH 72 INCHES OF EXTRA LINE CAPABLE OF EXTENDING FROM EACH END OF CONDUIT. THE PULL LINE SHALL BE SECURED INSIDE THE ENDS OF THE CONDUIT AND BOTH ENDS SHALL BE CAPPED.
7. CONDUIT SHALL EXTEND A MAX. OF 3 INCHES ABOVE THE GRAVEL IN THE BASE OF THE GROUND BOX AND A MINIMUM OF 2" ABOVE THE GRAVEL.

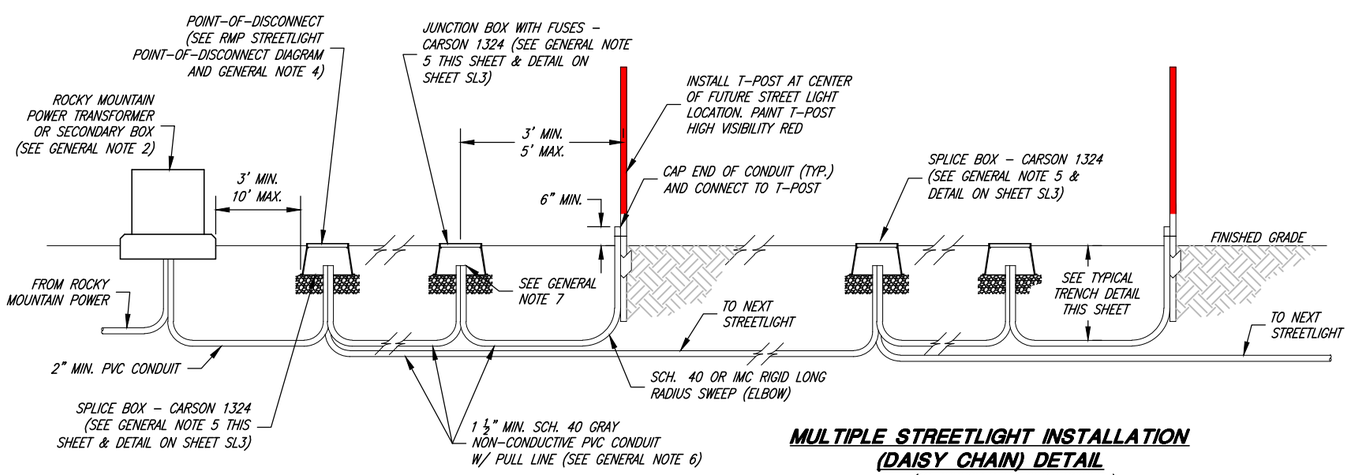

MULTIPLE STREETLIGHT INSTALLATION (DAISY CHAIN) DETAIL

(AS APPROVED BY CITY ENGINEER)

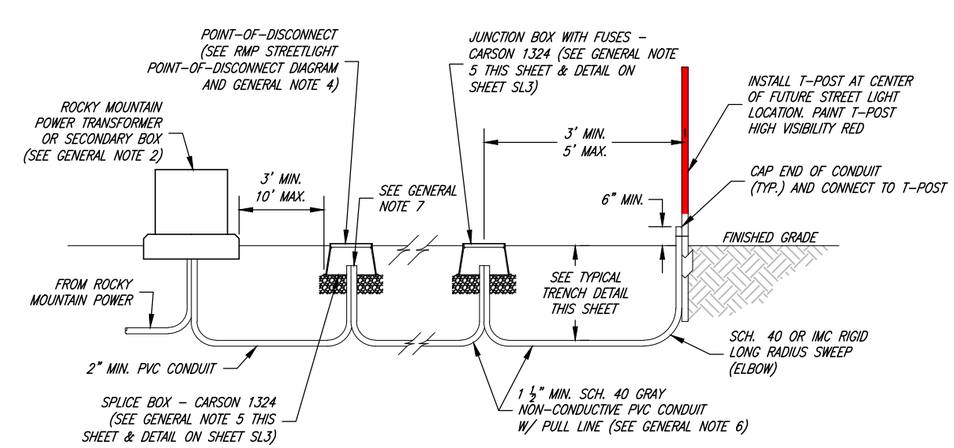

TYPICAL STREETLIGHT INSTALLATION

REGISTERED PROFESSIONAL ENGINEER — BRANDON KENT JONES No. 5148758 — State of Utah

Brandon K. Jones
PROJECT ENGINEER
1/10/2023
DATE

REV.	DATE	APPR.

SCALE: N.T.S.

DESIGNED BKJ
DRAWN BEB
CHECKED BKJ

JONES & ASSOCIATES — CONSULTING ENGINEERS
6080 Fashion Point Drive
South Ogden, Utah 84403 (801) 476-9767
www.jonescivil.com

SOUTH WEBER city

SOUTH WEBER CITY CORPORATION
PUBLIC WORKS - STREET LIGHTING STANDARDS
DEVELOPER/CONTRACTOR INSTALLATION PORTION OF STREETLIGHT STANDARDS

SHEET: SL2 OF 33 SHEETS
0