Cedar City

10 North Main Street • Cedar City, UT 84720
435-586-2950 • FAX 435-586-4362
www.cedarcity.org

CITY COUNCIL WORK MEETING
APRIL 19, 2023
5:30 P.M.

The City Council meeting will be held in the Council Chambers at the City Office, 10 North Main Street. The agenda will consist of the following items:

I. Call to Order

II. Agenda Order Approval

III. Administration Agenda
- Mayor and Council Business
- Staff Comments
  - Main Street presentation. Talisa Myers

IV. Public Agenda
- Public Comments

V. Business Agenda

Public

1. Consider local consent alcohol permits for Parkland USA, KB Express stores at 734 South Main Street; 1944 North Main Street; and 812 West 200 North. Parkland USA Corporation/Chief Darin Adams
2. Consider a Building Permit Agreement with Chezerbelle Properties, LLC./Shane Bulloch, to defer the frontage improvements on Westview Drive and Center Street. Go Civil/Paul Bittmenn
3. Consider final plat for the Iron West Town Homes located in the vicinity of 300 North and 4500 West. Go Civil/Paul Bittmenn
4. Consider final plat of Iron Willows Phase 2 located in the vicinity of 3300 West and 1775 North. Platt & Platt/Paul Bittmenn
5. Consider final plat approval for the Cove at Cedar City PUD phase 2. Platt and Platt/ Paul Bittmenn
6. Public hearing to consider an ordinance amending Cedar City's sewer master plan in the general vicinity of 2400 North Lund Highway. Go Civil/Paul Bittmenn
7. Public hearing to consider an ordinance amending Cedar City's transportation master plan in the general vicinity of Main Street between Nichols Canyon Road and Canyon Ranch Drive. Platt & Platt/Paul Bittmenn

Staff

8. Consider purchasing a 2023 CAT 326 Excavator. Jeff Hunter
9. Consider a resolution to approve a contract with LensLock. Chief Darin Adams

10. Consider combining the Active Transportation Committee & the Trails Committee. Ken Nielson
11. Consider an amendment to the City Traffic Ordinance to establish No Parking zones at the intersection of Kitty Hawk Drive and Airport Road. Jonathan Stathis
12. Consider an Engineering Standards variance for Detail C6 regarding expansion joint spacing in concrete sidewalk. Jonathan Stathis
13. Consider the appointment of Randall McUne as the City Attorney. Mayor Green

Dated this 17th day of April, 2023.

Renon Savage

Renon Savage, MMC
Cedar City Recorder

CERTIFICATE OF DELIVERY:

The undersigned duly appointed and acting recorder for the municipality of Cedar City, Utah, hereby certifies that a copy of the foregoing Notice of Agenda was delivered to the Daily News, and each member of the governing body this 17th day of April, 2023.

Renon Savage

Renon Savage, MMC
Cedar City Recorder

Cedar City Corporation does not discriminate on the basis of race, color, national origin, sex, religion, age or disability in employment or the provision of services.

If you are planning to attend this public meeting and, due to a disability, need assistance in accessing, understanding or participating in the meeting, please notify the City not later than the day before the meeting and we will try to provide whatever assistance may be required.

CEDAR CITY COUNCIL
AGENDA ITEMS - 2
DECISION PAPER

TO: Mayor and City Council

FROM: City Manager

DATE: April 15, 2022

SUBJECT: Building Permit agreement with Chezerbelle Properties, LLC.

This agreement allows for the deferral of improvements to property located at 17 North Westview Drive. Below is a map, the property shaded in blue is the property this agreement covers.

The property owner has requested a building permit. This agreement would allow the building permit to proceed and defer the frontage improvements until Cedar City has an approved design for Center Street and Westview Drive. These roads intersect at the south end of the property. Below is a copy of the agreement.

Please consider granting the deferral agreement. If you have questions, please ask. Thank you.

BUILDING PERMIT AGREEMENT

THIS AGREEMENT, is made and entered into this ____ day of _____, 2023, by and between Chezerbelle Properties LLC owned by Shane Bulloch, herein referred to as CITIZEN, Cedar City Corporation, a municipal corporation organized and existing under the laws of the State of Utah, herein referred to as CITY. Collectively the CITIZEN and CITY may be referred to as the PARTIES.

WITNESSETH:

WHEREAS, CITIZEN owns a lot located at 17 N Westview Drive in Cedar City, Utah (Iron County Parcel ID B-1432-0000-0000); said property being more particularly described as attached in Exhibit A.

WHEREAS, said property, pursuant to Ordinance, will not meet certain prerequisites for development;

NOW THEREFORE, in consideration of the mutual covenants and agreements contained here, and for other good and valuable consideration, the receipt and sufficiency of which are hereby acknowledged, the PARTIES agree as follows:

1. CITIZEN may obtain a building permit to install a power meter on said property located at 17 N. Westview Dr., Cedar City, Utah (Iron County Parcel ID B-1432-0000-0000), subject to the terms and conditions set forth herein.

2. CITY agrees to waive certain requirements temporarily subject to the terms and conditions set forth herein.

3. CITIZEN acknowledges their obligation to install their portion of curb, gutter, sidewalk, street, water, sewer, drainage and landscaping improvements in accordance with city ordinance. CITIZEN agrees to install, at their own expense, curb, gutter, sidewalk, street, water, sewer, drainage and landscaping improvements fronting Westview Drive and Center Street, and within 180 days of the design of Westview Drive and/or Center Street receiving City approval. At the time of the required improvements being installed by the CITIZEN, additional flood channel improvements will be required along the west property line, which will include rip-rap and geotextile installation along the property frontage.

4. CITIZEN acknowledges that once Westview Drive and/or Center Street is graded to match the approved design grades, then the curb and gutter improvements shall be installed within 30 days of the road grade being established in order to facilitate paving in a timely manner.

5. CITY agrees to provide written notice to CITIZEN which will start the 180 day or 30 day time period as stated under terms 3 and 4. If CITIZEN does not improve said property with the improvements outlined under terms 3 and 4, CITIZEN acknowledges and consents that CITY may elect to install the improvements and record a lien against said

property to secure the repayment of the costs associated with the CITY installing the improvements.

6. This Agreement shall be recorded in the office of the Iron County Recorder.

7. This Agreement shall be binding upon the respective heirs, legal representative, successors, and assigns to the PARTIES hereto.

8. This agreement shall run with the title to the property and be binding on any successor in interest.

IN WITNESS WHEREOF, the PARTIES have executed this Agreement as of the day and year set forth above:

CITIZEN:
By: Shane Bulloch
Signature: _____

Title: Owner of Chezerbelle Properties LLC

STATE OF)
:ss.
COUNTY OF)

On this _____ day of _____ 2023, personally appeared before me _____ who duly acknowledged to me that he signed the above and foregoing document.

_____
NOTARY PUBLIC
CITY:

_____
GARTH O. GREEN
MAYOR

[SEAL]
ATTEST:

_____
RENON SAVAGE
CITY RECORDER

STATE OF UTAH)
:ss.
COUNTY OF IRON)

This is to certify that on the _____ day of _____2023, before me, the undersigned, a Notary Public, in and for the State of Utah, duly commissioned and sworn as such, personally appeared Garth O. Green, known to me to be the Mayor of Cedar City Corporation, and Renon Savage, known to me to be the City Recorder of Cedar City Corporation, and acknowledged to me that she the said Garth O. Green and she the said Renon Savage executed the foregoing instrument as a free and voluntary act and deed of said corporation, for the uses and purposes therein, and on oath state that they were authorized to execute said instrument, and that the seal affixed is the corporate seal of said corporation.

IN WITNESS WHEREOF, I have hereunto set my hand and affixed my official seal the day and year hereinabove written.

_____
NOTARY PUBLIC

EXHIBIT A
- legal description –

Beginning at a point South 89°39'51" West 529.77 feet along the Section line from the South Quarter Corner of Section 8, Township 36 South, Range 11 West, Salt Lake Base and Meridian; said beginning on the Westerly Right of Way line of West View Drive; thence South 89°39'51" West 218.67 feet along the Section line; thence North 41°47'30" East 309.84 feet; thence South 89°44'20" East 227.60 feet to the Westerly Right of Way line of West View Drive; thence South 43°14'27" West 314.52 feet along the said Right of Way to the beginning.

EXCEPTING THEREFROM any portion lying with the Center Street

ALSO EXCEPTING THEREFROM all that portion of lane conveyed to Cedar City Corporation by that certain Warranty Deed recorded August 5. 2019 as Entry No. 00731784, in Book 1452, at Page 1595 of Official Records.

Tax ID No; B-1432-0000-0000

CEDAR CITY COUNCIL
AGENDA ITEMS - 3
DECISION PAPER

TO: Mayor and City Council

FROM: City Manager

DATE: April 15, 2023, 2022

SUBJECT: Final plat approval for Iron West Town Homes.

This subdivision will create 11 town home lots. The subdivision is located at approximately 4500 West and 300 North. All of the required fees for this subdivision have been paid. Staff is working with the developer to obtain a title report so we can be assured the taxes are paid and there are no liens on the property. The developer has elected to defer the posting of the bond. Please consider approving the final plat for this project.

CEDAR CITY COUNCIL
AGENDA ITEMS - 4
DECISION PAPER

TO: Mayor and City Council

FROM: City Manager

DATE: April 15, 2022

SUBJECT: Final plat approval for Iron Willows subdivision, phase 2.

This is phase 2 of the Iron Willows project. This project is located at approximately 3300 West and 1775 North. We are currently waiting for the payment of fees, a determination on bonding, and we are working through an issue on the title report. Hopefully these items can be remedied prior to the action meeting. Please consider final plat approval for Iron Willows Subdivision, phase 2. Thank you.

CEDAR CITY COUNCIL
AGENDA ITEMS - 5
DECISION PAPER

TO: Mayor and City Council

FROM: City Manager

DATE: , 2022

SUBJECT: Final plat approval for the Cove at Cedar City PUD phase 2.

This project is located at 944 South and Joe Thurston Way. All of the fees for this project have been paid. We are working with the developer to get a title report and a copy of the CC&R's prior to the action meeting. Otherwise, this project is ready for final plat approval. Please consider approving the final plat. Thank you.

CEDAR CITY COUNCIL
AGENDA ITEMS - 6
DECISION PAPER

TO: Mayor and City Council

FROM: City Manager

DATE: April 17, 2022

SUBJECT: Proposed sewer master plan amendment.

The developers of the Chelsey subdivision have requested an amendment to the City's existing sewer master plan. This would facilitate the gravity flow system tie in from the Chelsey subdivision to the City's 4500 West line. This gravity flow line was one of the stated reasons for the City's adoption of the Public Infrastructure District (PID) for the Chelsey Subdivision. Attached are the minutes from the Planning Commission. Please consider approving the amendment to Cedar City's sewer master plan.

2. PUBLIC HEARING

Amendment to the Sewer Master Plan (Recommendation)	approx. 2400 N. Lund Hwy. Chelsey Subdivision	Kent/GO Civil

Dallas Buckner – Go Civil - Sewer Master Plan amendment. We came through off and on with the Chelsea PID. We recently got that approved by the city council a couple of weeks ago. The Chelsea project is off of Lund and 2400. It is shown with this purple boundary. We got the PID because of the
offsite improvements that we needed in order to make the project go and so one of those improvements is the outfall sewer line that goes from the corner of Lund and 2800. About two miles to the west, about 10,000 feet to the existing outfall line that goes north south on 4500 West. The city has a master plan for the sewer lines. It looks like they plan on a per section basis. It's kind of hard to see on this map, I should have faded the image a little more so it was more legible. But the city has an 18-inch Master Plan sewer line on this section line and on this section line and presumably there's another one the section to the south. What we're asking is if we can change the city's master plan from this section line to the quarter section line on 2800. There are a couple reasons for that; one being that the One being that the Hunter Glen lift station; that serves Hunter Glen and Sycamore Trails, is planned to be taken offline, so there'll be an outfall line that runs from that lift station which is located right here out to the same existing outfall line on 4500 West. So, if we look at that section spacing, we're keeping that consistent and talking with Jonathan on this North boundary, this is the North boundary of the city's annexation boundary. So, the city doesn't anticipate annexing further than this within the next 20-year period. So, Jonathan wanted to keep this one at this location. And so, our thought process was, if we're going to put in a two-mile sewer line, we might as well upsize it, and make it able to be a masterplan line and have that additional capacity. There's some other notes that we've got on here, I think that was probably more so

for Jonathan to see, just from an engineering standpoint, but we ran some North South lines that would be feeder lines off of that, just to see how far we could run them at the minimum slope with an eight inch pipe and see how far they could go before they got less than nine feet deep. It wasn't in depth. The old city aerial didn't go out this far. So, we just did some quick engineering math on it. But that's essentially the request is to take this this Master Plan section line right now on this section line, and then move it up to 2800. The other benefit to that as a 2800 is already a county road all the way through this point. The only point it's not, is at the Sherratt farm. So, it's already it would be a sewer line that's in a road, accessible by many people in the future. **Adam** - I am not an engineer. So, Jonathan, do we have any concerns from the city on this change? **Jonathon** - So Dallas and I have had some good conversations on this, and from an engineering standpoint, we do feel good about this. I've also had the sewer department look at this, and they're happy with it. Actually, for the Chelsea subdivision, their original proposal was to do a sewer lift station, a pump station. So, we feel like this is a very good alternative here to make sure that saw gravity sewer. And the developers of Chelsea have been very good to work with on that to try to get that gravity sewer. Dallas, could you maybe give us an update on the Sherratt easement? Is that secured yet, or is that still in process? **Dallas Buckner** - My understanding is that the developer has come to an agreement with the Sherratt's. I had a design meeting with the Sherratt's a couple of weeks ago, we've gone out there and topo'd it and put it in alignment based on where they have existing improvements and where they want to see it. But I have not seen a deed recorded. **Jonathon** - Okay. **Dallas Buckner** - There were several factors of what they want and what the developers are willing to give and some negotiation back and forth. But my understanding is that they've come to an agreement and we just need to finalize it put together an actual easement in favor of Cedar City. Part of that also, is we recently turned in the construction drawings for this outfall line. And I kind of wanted to get some feedback from engineering and Randy or the sewer department as far as widths of easement before we sign something off and we say you need to be 20 feet. Randy says it needs to be 25 or something like that. So, I think we're at the point where we can get that signed and finalize it. We just want to make sure all our ducks in a row, so we don't have to a correction or redo it or something. **Jonathon** - Okay. Like Dallas said on the Hunter Glen lift station, the city is planning to do a project to decommission that lift station and then run that line. So that would be the southernmost line there on the map. So, it makes sense to put that into this map in the master plan as a master plan line. So basically, overall, we feel good about it. We think this is a good solution to not do lift stations and to run everything by gravity to 4500 West. **Adam** - Fantastic. Commission, do we have any questions for Dallas? **Isom** - I just have to comment. This is very good utilization of that PID, I think? **Dallas Buckner** - I think so too. And I think that the benefit of converting this into a masterplan line, upsizing it a little bit. And having in that road, where there's numerous farm properties that people tend to want to develop farms, so it seems like a good plan and will have good capacity, and I think it'd be a benefit for the city to shift this and upsize it as well. **Carter Wilkey** - I just had one question, just out of curiosity more than anything. but the design depth on that main line going west, it gets shallower as it goes west? It goes from 21 feet to 19 feet to 17 feet. Is that just because of the natural slope? **Dallas Buckner** - Yeah, there's some swells and stuff that that can play with those rim heights. The other thing is just that when you run sewer this far, this flat, it's a challenge to construct at the minimum slopes. So, we were holding it a little bit deeper. I mean, it starts out about 20 feet deep here, and we carry it looks like there's a little bit of a

low point in the topography. So that's why it's down at 17. But for the most part, we're carrying it about 20-feet deep. **Carter Wilkey** - because I'm like that doesn't make sense. Yeah, it just seemed to be backwards. **Dallas Buckner -** It gets shallower. **Carter Wilkey -** Yeah, it seems like it's going uphill. **Dallas Buckner -** Yeah. And then we also are trying to leave a little bit of vertical play for the contractor when they construct it so that we're not just right at minimum. **Carter Wilkey** – What we're not taking into consideration is the land. **Dallas Buckner -** Yeah, exactly. The other problem with out here is, it's just so flat that you almost have to run these bigger pipes just to keep the grade. So you don't come out of the ground too quickly. **Adam** - This is a public hearing, and I know everybody's here to talk about the sewer system. I know you're not. So, if anybody here would like to speak about the masterplan sewer design. Seeing no one, we will close the public hearing and ask the commission for a recommendation.

Jennie Hendricks motions for a POSITIVE recommendation for the Sewer Master Plan Amendment; Jennifer Davis seconds; all in favor for unanimous vote.

CEDAR CITY COUNCIL
AGENDA ITEMS - 7
DECISION PAPER

TO: Mayor and City Council

FROM: City Manager

DATE: April 17, 2022

SUBJECT: Proposed Transportation master plan amendment

Development interests on the north end of Main Street have proposed an amendment to the City's transportation master plan. They would like to see additional access points to Main Street between Nichols Canyon Road and Canyon Ranch Drive. Main Street is a UDOT controlled road. The proponents of the change have indicated UDOT is not likely to change their access plans for this section of Main Street without Cedar City first changing its master plan. The proponents would like to see the change to encourage economic development. UDOT's position is less access points equates to increased traffic safety. The minutes form the planning commission are contained below. There is also a map showing the approximate location of the requested master plan amendments and a power point that was presented to the planning commission. Please consider amending the City's transportation master plan.

5. PUBLIC HEARING

Transportation Master Plan Amendment (Recommendation)	approx. Canyon Ranch Dr. and N. Main Street	Aqueous LLC/Platt & Platt

Dave Clark – Platt & Platt – There are a lot of reasons we are doing this. We are trying to open up some development on the North Interchange. Currently this is Love's and this Ag Credit, this is an existing road, and this is UDOT has different categories as far as they are UDOT said no without any consideration. This next image shows how UDOT has this categorized. This is a category 3 and that means that there can only be an access every quarter of a mile. All the way up Main Street there is access closer than a quarter mile, other than the place they are requesting a change. We are wanting to ask UDOT to re-categorize this road. They will only consider it if a public entity requests that. WE would like this to be categorized as a Category 5. Our client has some national chains that want to come in and they want a corner. They would be 55 foot commercial roads. Jennie Hendricks – Is this changing the entirety of Main Streets from the Cemetery north? Carter WIlkey – What is this other yellow road? Dave – It's just to tie these all together. Adam – So what does the Master Plan show? It just doesn't show these yellow roads. We are asking for these three to be

added. Carter WIlkey – so going back to the SITLA piece, the majority of that road is SITLA land? Dave – Yes. Carter – So is this the same property that the city is considering?

Open to Public Hearing –
Matt Rhodes – we have looked at this area quite a bit. One of the things we are trying to do is to keep Main Street functional. By adding intersections there is an increased chance for accidents 2-5%. We are also going through some quality solutions going on trying to mitigate these problems. Cedar City has the highest accident count on their Main Street. Jennie – Do you know why that is? Is it speed, is it points of access. Adam – there is obviously an issue at the North end of town. If the businesses are being told that they cannot have access, than maybe that is the issue. Carter Wilkey – the benefit of this is that this would help the access on the South end. Would these be intersections with lights? Matt – If it is a national change it would probably warrant it. But we would rather not put in signals.

Mayor Garth Green – He supports this and he is trying to work in the area to make this happen. He recognizes the challenge in this. He understands that UDOT's goal is to move traffic. It is impossible to go from the North interchange to the South interchange without going on the freeway you can't do it without being on Main street. That is partly because the Forest Service built there parking lot across a master planned road. Carter WIlkey – Mayor, can I ask you a question about a master planned road? When the city is making master planned roads, we do not let the property owners know that we are master planning a road through their property and when they go to improve their property they are responsible for improving that road. Now with this piece the city would be responsible for putting in this road. Are you still in support of this? Mayor –

Closed

Craig Isom motions for a POSITIVE recommendation for the Transportation Master Plan Amendment; Jennie Hendricks seconds; all in favor for unanimous vote.


MAIN
STREET

Transportation Master Plan Amendment

Allowing North Main to Meet Community Needs

Current Access Categories

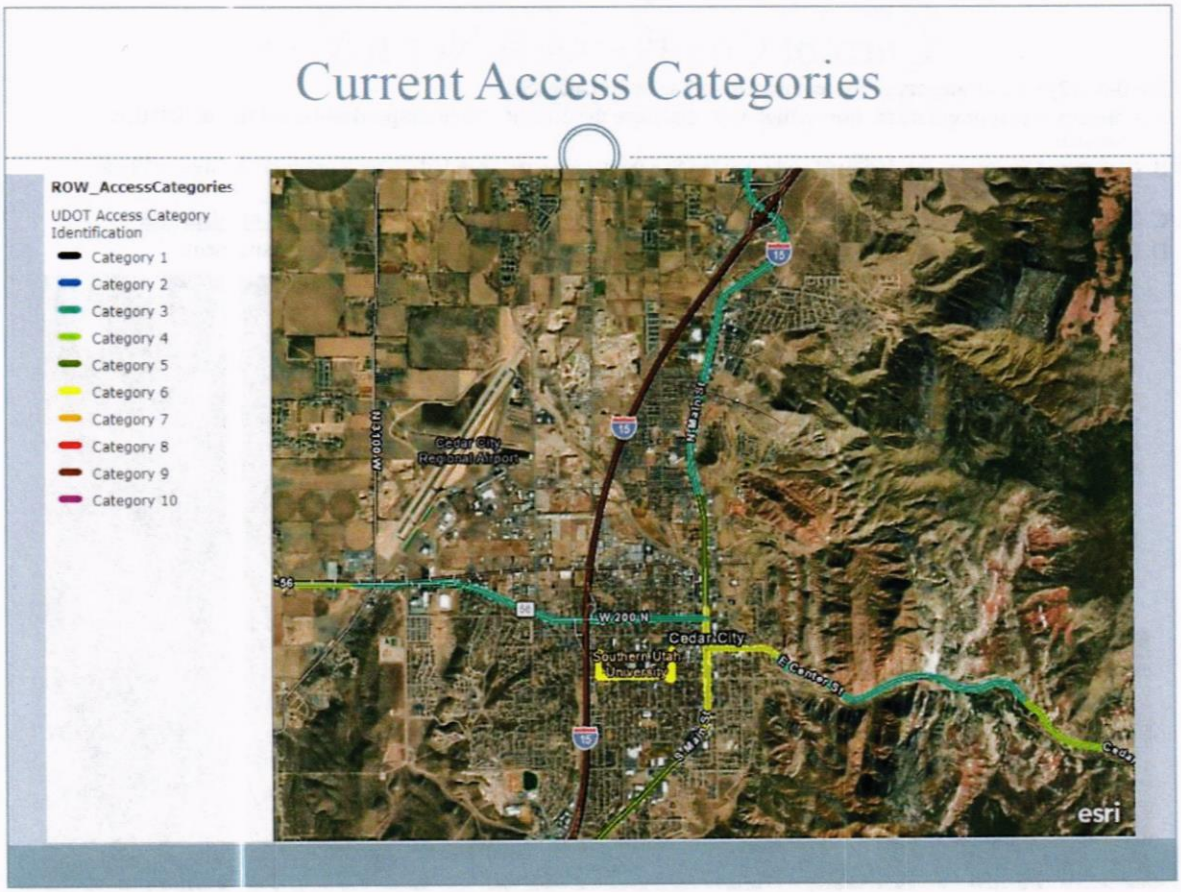

Current Conditions at North Main

R930-6-6(2)(b)(iii) Category 3: System priority-urban importance (S-U).

A. Category 3 is appropriate for use on highways that have the capacity for high speed and relatively high traffic volumes.

B. Category 3 highways are designed and intended to achieve a posted speed of 50 mph or higher in areas without signals and 40 mph or higher in areas with signals.

C. These facilities provide for interstate, inter-regional, intra-regional, and intercity travel needs in urban areas.

D. Direct access service to abutting land is subordinate to providing service to through traffic movements.

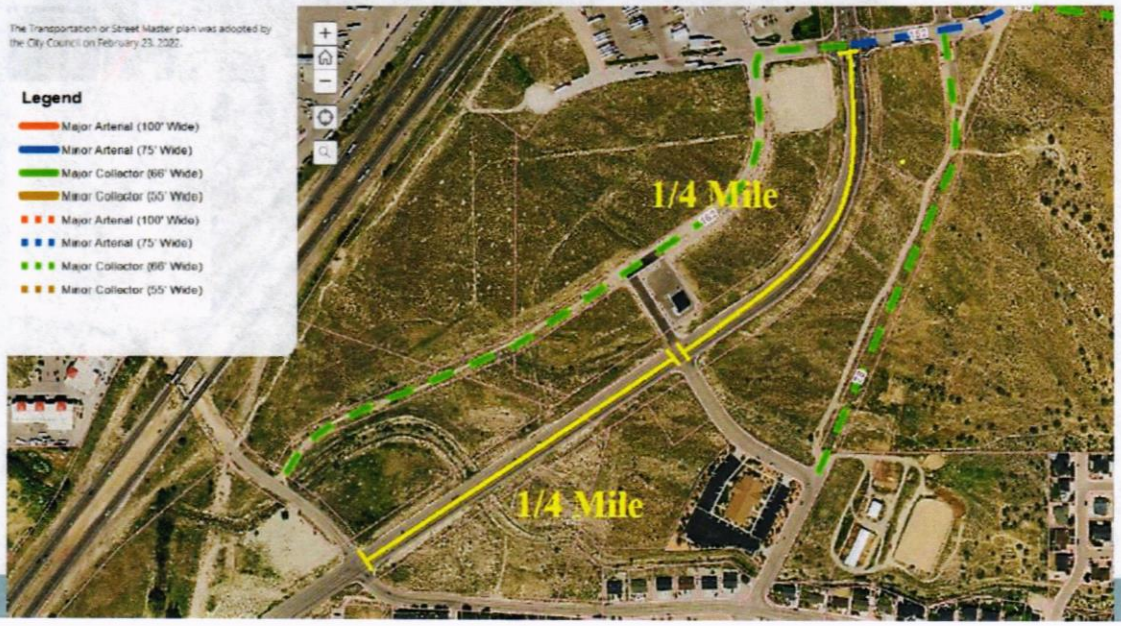

Future of North Main

R930-6-6(2)(b)(v) Category 5: Regional priority-urban importance (R-PU).

A. Category 5 is appropriate for use on highways that have the capacity for moderate speed (generally 45 mph or higher)and moderate to high traffic volumes.

B. There is a balance between direct access and mobility needs within this category.

C. These facilities move traffic across multiple communities or jurisdictions, typically connecting facilities of interstate or system importance and through urban areas that have significant potential for development or redevelopment.

Utah Administrative Rule R930-6. Access Management

The purpose of this rule is to:

a)maximize public safety;
b)provide for efficient highway operations and maintenance of roadways;
c)utilize the full potential of the highway investment.

The current Access Management Classification of North Main does not create a result that fulfills the purposes of the Rule. Cedar City should request a reassignment from UDOT that leads to more efficient and safe uses of our public investments.

R930-6-6(2)(c)(i)
Category reviews and reassignments.

External requests for changes in the access category of a state highway or sections thereof must be submitted to the Department through the appropriate local authority…Such requests must include information pertaining to the factors cited in this rule for determination of category assignment and explain the need for the requested change. The explanation must also discuss how the requested change is consistent with and conforms to the purpose and standards of this rule and does not compromise the public health, safety, and welfare…

CEDAR CITY COUNCIL
AGENDA ITEM 8

INFORMATION SHEET

TO: Mayor and City Council

FROM: Jeff Hunter

DATE: April 13, 2023

SUBJECT: 2023 CAT 326 Excavator (State Contract #MG 20057) (Budget Revision Request)

DISCUSSION: The Streets Division is requesting approval to purchase a CAT 326 Excavator in the amount of $320,000 from the C road Funds. There is one available now that I put our name on in February, knowing that the pressure from other cities and counties was coming. They want us to move on this in the next couple of weeks or we will lose our spot.

With potential of high run offs from our mountains and other upcoming projects. I am asking for your consideration.

140609-01

Feb 13, 2023

CEDAR CITY CORPORATION
DO NOT MAIL
VISA PURCHASES ONLY
CEDAR CITY, UT84720

Attention: Jeff Hunter

Machine pictured may not reflect specifications quoted.

Dear Jeff Hunter,

Thank you for your interest in Wheeler Machinery Co. and its products. I am pleased to provide you with this quote for your consideration.

New Caterpillar Model: 326 CF Excavators in addition to the additional specifications listed below.

STOCK NUMBER: AA009920 **SERIAL NUMBER:** 0FAY00317 **YEAR:** 2023 **SMU:** 6

Thank you for your interest in Wheeler Machinery Co. and Caterpillar products for your business needs. This quotation is valid for 30 days, after which time we reserve the right to re-quote. If there are any questions, please do not hesitate to contact me.

Marco Defa | Machine Sales Representative | Wheeler Machinery Co.
435-229-6074 | mdefa@wheelercat.com

New Caterpillar Model: 326 CF Excavators in addition to the additional specifications listed below.

STANDARD EQUIPMENT

POWERTRAIN -C7.1e single turbo EU Stage V diesel -engine -Electric fuel priming pump -Reversible electric cooling fans -Two-stage fuel filtration system -with water separator and indicator -2 x 115 amp. dual alternator -Sealed double element air filter -with integrated precleaner -Biodiesel capable (up to B20)

UNDERCARRIAGE -Grease lubricated track link -Tie down points on base frame -(ISO 15818 compliant) -

HYDRAULICS -Electronic main control valve -Auto warm up -Tandem type electronic main pump -(165cc/rev) -Electric boom regeneration circuit -Stick regeneration circuit -Automatic two speed travel -Boom and stick drift reduction valve -Element type main hydraulic filter -

ELECTRICAL -Maintenance free battery -Centralized electrical disconnect switch -CAT Product Link -After engine shutdown 90 seconds -programmable time delay -LED working lights:One chassis mounted, -one LH boom mounted -

OPERATOR ENVIRONMENT -Sound suppressed ROPS cab (ISO 12117-2 -compliant) with viscous mount -Increased rear window size -as emergency exit -Openable tempered front upper windshield -w/assist device and removable tempered -lower windshield with in cab storage -bracket -2 inch (51mm) orange seat belt -Upper radial wiper for 70/30 -Automatic bi-level air conditioner -with pressurized function -Washable floor mat -Beacon ready -2 x 12V DC outlet and USB port -Dome and lower LED interior lights, -coat hook, cup holder, console storage -(Comfort cab) - for Japan --Mechanical suspension comfort seat -w/ headrest, console height adjustment -w/ tools, arm rest angle adjustment --Fixed left side console --Openable steel hatch -(Deluxe cab) --Air suspension deluxe seat w/ headrest -w/ 2 step seat heater, console height -adjustment w/o tools, arm rest height -and angle adjustment --Tilt up left side console --Openable polycarbonate hatch for 2P -windshield -

SAFETY AND SECURITY -RH Hand rail and hand hold -(ISO 2867 compliant) -Service platform with anti-skid plate -and countersunk bolts -Hydraulic lock out lever neutralizes -all controls -Ground level accessible secondary engine -shutoff switch in cab -Signaling / warning horn -

OTHER STANDARD EQUIPMENT -Side entry to service platform -Grouped location for engine oil and -fuel filters -Ground level 2nd dipstick for engine oil -Sampling ports for Scheduled Oil -Sampling (S.O.S) -Remote flash and remote trouble shoot -

MACHINE SPECIFICATIONS

326 07E HEX AM-N CFG1A	618-5917	TRACK, 31" TG	527-5575
326 07 EXCAVATOR ARR	600-5985	GUARD, TRACK GUIDING SEGMENTED	346-7149
326 COMMON ARRANGMENT	600-5973	HYDRAULIC PKG, COMB ADV	597-3160
GUARD, SWIVEL	134-8879	JOYSTICKS, VERTICAL SLIDER	528-6835
WIPER, RADIAL W/LOWER	484-8022	LINES, DRAIN, PG	549-9536
PEDAL, STRAIGHT TRAVEL	490-7715	LINES, A/C	577-7867
INTEGRATED RADIO, W/O DAB	502-7166	BATTERIES, 2	506-5013
MONITOR, 10"	511-9428	CAMERA, REAR + RH VIEW	593-4954
SENSOR, PRESSURE, EOU	513-3214	LIGHTS, CAB, W/RAIN PROTECTOR	577-8973
VALVE, FINE SWING	520-1923	MIRROR, CAB, W/O GUARD	580-8628
FILM, OPERATING PATTERN, 2WAY	520-9418	LIGHT, REACH & SLR BOOM LH	577-6541
RECEIVER, BLUETOOTH	524-8272	GRADE W/2D, ASSIST&PAYLOAD	516-0550
MACHINE ECM	525-7678	GRADE SENSOR, REACH BOOM	527-5714
CYLINDER, BOOM	527-1854	GRADE SENSOR, R9'6"/9'8" STICK	516-9883
SCREEN, RADIATOR	549-2633	PROD LINK, PLE643/PLE743 RADIO	594-9052
GUARD, BOTTOM HD	576-9456	NETWORK MANAGER, STD	555-7286
LIGHT, CHASSIS	577-3907	COUNTERWEIGHT, 10,140LBS	598-9149
TRAVEL, ALARM	592-8316	FILM, EXTERIOR, ANSI	578-2910
QUICK DRAINS	601-8480	FILM, INTERIOR, ANSI	573-4351
GUARD, TRAVEL MOTOR HD	608-6257	FILM, STICK WARNING, ANSI	567-3815
UNDERCARRIAGE, LONG	609-1672	FILM, EMC	528-4738
CAB, DELUXE	609-5081	FILM, ROPS	610-6129
UPPER COVER, CENTER	555-5784	INSTRUCTIONS, ENGLISH	0P-3380

VALVE, HYDRAULIC TCS HL	527-6501	LINES, HP, REACH BOOM	527-2266
MAIN LINE, STD	578-0220	LINES, HP, R9'8" STICK	356-8152
LINES, MAKE UP, TCS	560-5828	COLD STARTING, ETHER	516-5100
RETURN PIPE, TCS	516-7669	BLOCK HEATER, 120V	339-7054
ADVANCED TOOL CONTROL PACKAGE	527-7061	STORAGE TRAY	576-9461
RADIO MODULE, PL243 CELLULAR	589-1744	CONTROL, QC	517-4758
WIRING, PRODUCT LINK ELITE	594-2025	LINES, QC, REACH BOOM	527-2268
LANE 3 ORDER	0P-9003	LINES, QC, R9'8" STICK	253-6498
BOOM, REACH 19'4"	527-2203	STORAGE PROTECTION (EXPORT)	0G-4126
BOOM TUBE, EOU	527-2200	STORAGE PROTECTION (EXPORT)	0P-7563
STICK, R9'8"	527-2208	ROLL ON-ROLL OFF	0G-4202
LINKAGE, BKT-CB1 W/EYE	533-5001	LIGHT, REACH & SLR BOOM RH	577-6542
CYLINDER, STICK	527-5467	BUCKET, 54" - AA009920B	541-1750
CYLINDER, BKT CB1	527-5475	QUICK COUPLER - AA009920Q	455-3911
HYDRAULIC THUMB			

Award Justification Statement
Statewide Solicitation #MG20057
Contract Name: Heavy Equipment Purchase Statewide

**In accordance WITH Utah State Bid Requirements*

SELL PRICE	$320,000.00
NET BALANCE DUE	**$320,000.00**
AFTER TAX BALANCE	**$320,000.00**

WARRANTY & COVERAGE
Standard Warranty: 12 Months / Unlimited Hours – Premier Plus 5 Year 3000 Hour Powertrain Hydraulic and Technology.

F.O.B/TERMS:
CEDAR CITY UT

#9

LENSLOCK

Cedar City Police Department - UT

LensLock Regional Manager

Sean O'Grady

(949) 690-6552

SOG@LensLock.com

13125 Danielson Street, Suite 112
Poway, CA 92064
U.S.A.

LensLock Inc.
"Securing Trust - One Incident at a Time"
13125 Danielson St., Suite 112
Poway, CA 92064 – U.S.A.
Toll Free – 888-538-0589
www.LensLock.com

Issued: February 23, 2023

Proposal Valid for 90 Days

Proposal Number: #23-137-UT

Services: BWC & ICV Service
Payment Due: July 31, 2023
Length of Service: 63 Months
Start Date: April 3,2023

ATTENTION:
Cedar City Police Department
10 N Main St
Cedar City, UT 84720
Customer ID #22-137-UT

SHIP TO:
Chief Darin Adams

SALES REPRESENTATIVE:
Sean O'Grady
Regional Manager
Phone: (949) 690-6552
Email: SOG@LensLock.com

QTY	DESCRIPTION	UNIT PRICE	YEAR 1 COST
34	Gen 12 Body Worn Camera Service - **UNLIMITED Data Plan**	$1,099.00	$37,366.00
8	Gen 12 Body Worn Camera Service - **UNLIMITED Data Plan**	$699.00	$5,592.00
3	Gen 12 Body Worn Camera Service - **UNLIMITED Data Plan**	$0.00	INCLUDED
30	Titan V In-Car Video Service - UNLIMITED Data Plan	$2,099.00	$62,970.00
30	Bluetooth Integrated Technology System (BITS)	$299.00	INCLUDED
30	LensLock In Car System Removal + Installation - One-Time Fee	$650.00	$19,500.00
1	Interrogation Room Package	$3,895.00	$3,895.00
1	Interrogation Room Package	$0.00	INCLUDED
74	60-Month Hardware Guarantee	$0.00	INCLUDED
74	New Body Worn & In Car Cameras Every 30 Months	$0.00	INCLUDED
Unlimited	CAD Integration	$0.00	INCLUDED
Unlimited	Migration & Hosting of Legacy Data	$0.00	INCLUDED
Unlimited	LensLock FBI-CJIS Redaction Services	$0.00	INCLUDED
Unlimited	24/7/365 Premier Customer Support	$0.00	INCLUDED
Unlimited	LensLock Evidence Management Software Access	$0.00	INCLUDED
Unlimited	District Attorney & Defense Based Software Licenses	$0.00	INCLUDED
		SUBTOTAL	$129,323.00
		SALES TAX	EXEMPT
		Y1 TOTAL	**$129,323.00**

Summary of 5-Year Payments

Payment	Amount
Year 1 - *July 1, 2023 - June 30th 2024*	$129,323.00
Year 2 - *July 1, 2024 - June 30th 2025*	$109,823.00
Year 3 - *July 1, 2025 - June 30th 2026*	$109,823.00
Year 4 - *July 1, 2026 - June 30th 2027*	$109,823.00
Year 5 - *July 1, 2027 - June 30th 2028*	$109,823.00
Grand Total	*$568,615.00

LIMITED WARRANTY

1) LENSLOCK EQUIPMENT

LensLock warrants to Client that Equipment is free from defects in material and workmanship for the duration of the service contract (**"Warranty Period"**) and subject to the terms set forth herein. In the event Client needs Equipment replaced, LensLock will provide said replacement hardware at no cost, unless the Equipment has been intentionally damaged or destroyed by client. Client pays for shipping fees for product returns and vendor pays for shipping costs for product replacements. It is understood that Vendor will require IT support from Client to ensure services are optimized. Additionally, it is understood that Vendor will set schedule for installation once Client approval is obtained. Because of supply chain demands, Vendor will make every professional effort to ensure schedule is met and installation is completed on time. Unforeseen natural disasters, health emergencies, and Acts of God beyond the reasonable control of Vendor may prevent performance of meeting said schedule.

2) BODY CAMERA REFRESH SCHEDULE & BUY-BACK OPTION:

Additionally, it is understood by both parties that **LensLock will refresh Body Worn cameras to client every thirty (30) months from the start date listed on page 2 and the Client will receive a brand-new supply of cameras based on the terms of this agreement. It is understood that Client owns the Hard Goods Equipment referenced in this agreement at the end of the initial sixty (60) month term.** Client may request additional Equipment prior to the thirty-month period but will be billed an additional set of fees for additional users and or any special orders. Client must approve said purchase in writing.

3) LENSLOCK ONLINE PLATFORM

LensLock warrants that the Online Platform Services (a) will perform materially in accordance with the LensLock published documentation, and (b) professional services will be performed in a timely and professional manner by qualified persons with the technical skills, training, and experience to perform such Services.

4) LENSLOCK TECHNOLOGY

Any additional features or functionality (service upgrades) associated with LensLock overall service offering that client desires may be communicated directly to LensLock customer service representatives on an ongoing basis. Said client requests (whether hardware related or software related features) will be considered from several business perspectives, including but not limited to, vertical market applicability, CJIS regulatory standards, financial impact, technical complexity, end-user experience, legal liability, and competitive landscape.

If the technical requirements of client requests may be implemented in a reasonable business manner, LensLock may or may not charge client an additional set of fees for all new features and functionality associated with service upgrade.

It is our corporate policy that we embrace the challenge of continuous innovation to ensure our clients are pleased with our service offering. It is our experience that the very best ideas for our next set of innovations come directly from our consortium of valued Law Enforcement customers. As such, please do not hesitate to communicate client requests as they surface.

LensLock Inc.
"Securing Trust - One Incident at a Time"
13125 Danielson St., Suite 112
Poway, CA 92064 – U.S.A.
Toll Free – 888-538-0589
www.LensLock.com

CLIENT: **Cedar City Police Department - UT**

Darin Adams - Chief

_____
(Name - Title)

_____
(Signature)

_____
(Date)

VENDOR: **LensLock, Inc.**

Andrew Lynch - Executive Vice President

_____
(Name - Title)

_____
(Signature)

_____
(Date)

Thank you SINCERELY for your business!

LensLock Terms and Conditions

DOCUMENTATION INSTRUCTIONS

The instructions listed below should be followed when completing the enclosed documentation. ***Please sign in blue ink and print on single sided paper only.*** Documentation completed improperly will delay funding. If you have any questions regarding the Conditions to Funding, instructions or the documentation, please call us at (858) 231-4061.

I. Attached Documentation

1. **Government Obligation Contract**
   - An authorized individual that is with the Obligor should sign on the first space provided. ***All original signatures are required for funding.***
2. **Exhibit A – Description of Equipment**
   - Review equipment description. Complete serial number/VIN if applicable.
   - List the location where the equipment will be located after delivery/installation.
3. **Exhibit B – Payment Schedule**
   - Sign and print name and title
4. **Exhibit C - Certificate of Acceptance**
   - Sign and print name and title
5. **Exhibit D - Obligor Resolution**
   - Type in the date of the meeting in which the purchase was approved.
   - Print or type the name and title of the individual(s) who is authorized to execute the Contract.
   - The board chairman or other authorized member of the Obligor's Governing Body must sign the Resolution where indicated.
   - The board secretary or board clerk of Obligor must attest the Resolution where indicated.
6. **Exhibit E - Bank Qualified Certificate**
   - Sign and print name and title
7. **Notice of Assignment**
   - Sign and print name and title.
8. **Insurance Requirements**
   - Complete insurance company contact information where indicated.
9. **Debit Authorization – (Preferred)**
   - Complete form and attach a voided check
10. **8038G IRS Form**
    - Please read 8038 Review Form
    - In Box 2, type Employer Identification Number
    - Sign and print name and title

II. Additional Documentation Required

1. Insurance certificate as stated on the Insurance Requirements Form
2. Vendor Invoice for the amount to finance listing applicable SN/VIN, down payment, trade, etc.
3. Signed and completed Credit Application

III. Condition to Funding

If, for any reason: (i) the required documentation is not returned by June 27, 2023, is incomplete, or has unresolved issues relating thereto, or (ii) on, or prior to the return of the documentation, there is a change of circumstance, including but not limited to changes in the federal corporate income tax rate or reducing/capping the tax-exempt interest benefit, which adversely affects the expectations, rights or security of the Obligee or its assignees; then Obligee or its assignees reserve the right to withdraw/void its offer to fund this transaction in its entirety. *Neither KS StateBank nor Baystone Government Finance is acting as an advisor to the municipal entity/obligated person and neither owes a fiduciary duty pursuant to Section 15B of the Exchange Act of 1934.*

All documentation should be returned to:

LensLock Inc.
13125 Danielson Street, Suite 112
Poway, California 92064

GOVERNMENT OBLIGATION CONTRACT

Obligor
Cedar City, Utah
10 North Main Street
Cedar City, Utah

Obligee
LensLock Inc.
13125 Danielson Street, Suite 112
Poway, California 92064

Dated as of April 3, 2023

This Government Obligation Contract dated as of the date listed above is between Obligee and Obligor listed directly above. Obligee desires to finance the purchase of the Equipment described in Exhibit A to Obligor and Obligor desires to have Obligee finance the purchase of the Equipment subject to the terms and conditions of this Contract which are set forth below.

I. Definitions

Section 1.01 Definitions. The following terms will have the meanings indicated below unless the context clearly requires otherwise:
"Additional Schedule" refers to the proper execution of additional schedules to Exhibit A and Exhibit B, as well as other exhibits or documents that may be required by the Obligee all of which relate to the financing of additional Equipment.
"Budget Year" means the Obligor's fiscal year.
"Commencement Date" is the date when Obligor's obligation to pay Contract Payments begins.
"Contract" means this Government Obligation Contract and all Exhibits attached hereto, all addenda, modifications, schedules, refinancings, guarantees and all documents relied upon by Obligee prior to execution of this Contract.
"Contract Payments" means the payments Obligor is required to make under this Contract as set forth on Exhibit B.
"Contract Term" means the Original Term and all Renewal Terms.
"Exhibit" includes the Exhibits attached hereto, and any "Additional Schedule", whether now existing or subsequently created.
"Equipment" means all of the items of Equipment listed on Exhibit A and any Additional Schedule, whether now existing or subsequently created, and all replacements, restorations, modifications and improvements.
"Government" as used in the title hereof means a State or a political subdivision of the State within the meaning of Section 103(a) of the Internal Revenue Code of 1986, as amended ("Code"), or a constituted authority or district authorized to issue obligations on behalf of the State or political subdivision of the State within the meaning of Treasury Regulation 1.103-1(b), or a qualified volunteer fire company within the meaning of section 150(e)(1) of the Code.
"Obligee" means the entity originally listed above as Obligee or any of its assignees.
"Obligor" means the entity listed above as Obligor and which is financing the Equipment through Obligee under the provisions of this Contract.
"Original Term" means the period from the Commencement Date until the end of the Budget Year of Obligor.
"Renewal Term" means the annual term which begins at the end of the Original Term and which is simultaneous with Obligor's Budget Year and each succeeding Budget Year for the number of Budget Years necessary to comprise the Contract Term.
"State" means the state which Obligor is located.

II. Obligor Warranties

Section 2.01 Obligor represents, warrants and covenants as follows for the benefit of Obligee or its assignees:

(a) Obligor is an "issuer of tax exempt obligations" because Obligor is the State or a political subdivision of the State within the meaning of Section 103(a) of the Internal Revenue Code of 1986, as amended, (the "Code") or because Obligor is a constituted authority or district authorized to issue obligations on behalf of the State or political subdivision of the State within the meaning of Treasury Regulation 1.103-1(b), or a qualified volunteer fire company within the meaning of section 150(e)(1) of the Code.
(b) Obligor has complied with any requirement for a referendum and/or competitive bidding.
(c) Obligor has complied with all statutory laws and regulations that may be applicable to the execution of this Contract; Obligor, and its officer executing this Contract, are authorized under the Constitution and laws of the State to enter into this Contract and have used and followed all proper procedures of its governing body in executing and delivering this Contract. The officer of Obligor executing this Contract has the authority to execute and deliver this Contract. This Contract constitutes a legal, valid, binding and enforceable obligation of the Obligor in accordance with its terms.
(d) Obligor shall use the Equipment only for essential, traditional government purposes.
(e) Should the IRS disallow the tax-exempt status of the interest portion of the Contract Payments as a result of the failure of the Obligor to use the Equipment for governmental purposes, or should the Obligor cease to be an issuer of tax exempt obligations, or should the obligation of Obligor created under this Contract cease to be a tax exempt obligation for any reason, then Obligor shall be required to pay additional sums to the Obligee or its assignees so as to bring the after tax yield on this Contract to the same level as the Obligee or its assignees would attain if the transaction continued to be tax-exempt.
(f) Obligor has never non-appropriated funds under a contract similar to this Contract.
(g) Obligor will submit to the Secretary of the Treasury an information reporting statement as required by the Code.
(h) Upon request by Obligee, Obligor will provide Obligee with current financial statements, reports, budgets or other relevant fiscal information.
(i) Obligor shall retain the Equipment free of any hazardous substances as defined in the Comprehensive Environmental Response, Compensation and Liability Act, 42 U.S.C. 9601 et. seq. as amended and supplemented.
(j) Obligor hereby warrants the General Fund of the Obligor is the primary source of funds or a backup source of funds from which the Contract Payments will be made.
(k) Obligor presently intends to continue this Contract for the Original Term and all Renewal Terms as set forth on Exhibit B hereto. The official of Obligor responsible for budget preparation will include in the budget request for each Budget Year the Contract Payments to become due in such Budget Year, and will use all reasonable and lawful means available to secure the appropriation of money for such Budget Year sufficient to pay the Contract Payments coming due therein. Obligor reasonably believes that moneys can and will lawfully be appropriated and made available for this purpose.
(l) Obligor has selected both the Equipment and the vendor(s) from whom the Equipment is to be purchased upon its own judgment and without reliance on any manufacturer, merchant, vendor or distributor, or agent thereof, of such equipment to the public.
(m) Obligor owns the Equipment and any additional collateral free and clear of any liens, and Obligor has not and will not, during the Contract Term, create, permit, incur or assume any levies, liens or encumbrances of any kind with respect to the Equipment or any additional collateral except those created by this Contract.
(n) Obligor warrants, as applicable, the purchase of any telecommunications and video surveillance services or equipment financed hereunder complies with 2 CFR § 200.216 and 2 CFR § 200.471.
(o) Obligor warrants that it understands and has complied with 2 CFR § 200.322 in relation to domestic preferences for procurements, as applicable.

Section 2.02 Escrow Agreement. In the event both Obligee and Obligor mutually agree to utilize an Escrow Account, then immediately following the execution and delivery of this Contract, Obligee and Obligor agree to execute and deliver and to cause Escrow Agent to execute and deliver the Escrow Agreement. This Contract shall take effect only upon execution and delivery of the Escrow Agreement by the parties thereto. Obligee shall deposit or cause to be deposited with the Escrow Agent for credit to the Equipment Acquisition Fund the sum of N/A, which shall be held, invested and disbursed in accordance with the Escrow Agreement.

III. Acquisition of Equipment, Contract Payments and the Purchase Option Price

Section 3.01 Acquisition and Acceptance. Obligor shall be solely responsible for the ordering of the Equipment. Execution of the Certificate of Acceptance or, alternatively, Payment Request and Equipment Acceptance Form, by a duly authorized representative of Obligor, shall constitute acceptance of the Equipment on behalf of the Obligor.

Section 3.02 Contract Payments. Obligor shall pay Contract Payments exclusively to Obligee or its assignees in lawful, legally available money of the United States of America. The Contract Payments shall be sent to the location specified by the Obligee or its assignees. The Contract Payments shall constitute a current expense of the Obligor and shall not constitute an indebtedness of the Obligor. The Contract Payments, payable without notice or demand, are due as set forth on Exhibit B. Obligee shall have the option to charge interest at the highest lawful rate on any Contract Payment received later than the due date for the number of days that the Contract Payment(s) were late, plus any additional accrual on the outstanding balance for the number of days that the Contract Payment(s) were late. Obligee shall also have the option, on monthly payments only, to charge a late fee of up to 10% of the monthly Contract Payment that is past due. Furthermore, Obligor agrees to pay any fees associated with the use of a payment system other than check, wire transfer, or ACH. Once all amounts due Obligee hereunder have been received, Obligee will release any and all of its rights, title and interest in the Equipment.

SECTION 3.03 CONTRACT PAYMENTS UNCONDITIONAL. Except as provided under Section 4.01,THE OBLIGATIONS OF OBLIGOR TO MAKE CONTRACT PAYMENTS AND TO PERFORM AND OBSERVE THE OTHER COVENANTS CONTAINED IN THIS CONTRACT SHALL BE ABSOLUTE AND UNCONDITIONAL IN ALL EVENTS WITHOUT ABATEMENT, DIMINUTION, DEDUCTION, SET-OFF, OR SUBJECT TO DEFENSE OR COUNTERCLAIM.

Section 3.04 Purchase Option Price. Upon thirty (30) days written notice, Obligor shall have the option to pay, in addition to the Contract Payment, the corresponding Purchase Option Price which is listed on the same line on Exhibit B. This option is only available to the Obligor on the Contract Payment date and no partial prepayments are allowed. If Obligor chooses this option and pays the Purchase Option Price to Obligee then Obligee will transfer any and all of its rights, title and interest in the Equipment to Obligor.

Section 3.05 Contract Term. The Contract Term shall be the Original Term and all Renewal Terms until all the Contract Payments are paid as set forth on Exhibit B except as provided under Section 4.01 and Section 9.01 below. If, after the end of the budgeting process which occurs at the end of the Original Term or any Renewal Term, Obligor has not non-appropriated as provided for in this Contract then the Contract Term shall be extended into the next Renewal Term and the Obligor shall be obligated to make all the Contract Payments that come due during such Renewal Term.

Section 3.06 Disclaimer of Warranties. OBLIGEE MAKES NO WARRANTY OR REPRESENTATION, EITHER EXPRESS OR IMPLIED, AS TO THE VALUE, DESIGN, CONDITION, MERCHANTABILITY, FITNESS FOR PARTICULAR PURPOSE OR ANY OTHER WARRANTY WITH RESPECT TO THE EQUIPMENT. OBLIGEE IS NOT A MANUFACTURER, SELLER, VENDOR OR DISTRIBUTOR, OR AGENT THEREOF, OF SUCH EQUIPMENT; NOR IS OBLIGEE A MERCHANT OR IN THE BUSINESS OF DISTRIBUTING SUCH EQUIPMENT TO THE PUBLIC. OBLIGEE SHALL NOT BE LIABLE FOR ANY INCIDENTAL, INDIRECT, SPECIAL OR CONSEQUENTIAL DAMAGE ARISING OUT OF THE INSTALLATION, OPERATION, POSSESSION, STORAGE OR USE OF THE EQUIPMENT BY OBLIGOR.

IV. Non-Appropriation

Section 4.01 Non-Appropriation. If insufficient funds are available in Obligor's budget for the next Budget Year to make the Contract Payments for the next Renewal Term and the funds to make such Contract Payments are otherwise unavailable by any lawful means whatsoever, then Obligor may non-appropriate the funds to pay the Contract Payments for the next Renewal Term. Such non-appropriation shall be evidenced by the passage of an ordinance or resolution by the governing body of Obligor specifically prohibiting Obligor from performing its obligations under this Contract and from using any moneys to pay the Contract Payments due under this Contract for a designated Budget Year and all subsequent Budget Years. If Obligor non-appropriates, then all obligations of the Obligor under this Contract regarding Contract Payments for all remaining Renewal Terms shall be terminated at the end of the then current Original Term or Renewal Term without penalty or liability to the Obligor of any kind provided that if Obligor has not delivered possession of the Equipment to Obligee as provided herein and conveyed to Obligee or released its interest in the Equipment by the end of the last Budget Year for which Contract Payments were paid, the termination shall nevertheless be effective but Obligor shall be responsible for the payment of damages in an amount equal to the amount of the Contract Payments thereafter coming due under Exhibit B which are attributable to the number of days after such Budget Year during which Obligor fails to take such actions and for any other loss suffered by Obligee as a result of Obligor's failure to take such actions as required. Obligor shall immediately notify the Obligee as soon as the decision to non-appropriate is made. If such non-appropriation occurs, then Obligor shall deliver the Equipment to Obligee as provided below in Section 9.04. Obligor shall be liable for all damage to the Equipment other than normal wear and tear. If Obligor fails to deliver the Equipment to Obligee, then Obligee may enter the premises where the Equipment is located and take possession of the Equipment and charge Obligor for costs incurred.

V. Insurance, Damage, Insufficiency of Proceeds

Section 5.01 Insurance. Obligor shall maintain both property insurance and liability insurance at its own expense with respect to the Equipment. Obligor shall be solely responsible for selecting the insurer(s) and for making all premium payments and ensuring that all policies are continuously kept in effect during the period when Obligor is required to make Contract Payments. Obligor shall provide Obligee with a certificate of Insurance which lists the Obligee and/or assigns as a loss payee and an additional insured on the policies with respect to the Equipment.

(a) Obligor shall insure the Equipment against any loss or damage by fire and all other risks covered by the standard extended coverage endorsement then in use in the State and any other risks reasonably required by Obligee in an amount at least equal to the then applicable Purchase Option Price of the Equipment. Alternatively, Obligor may insure the Equipment under a blanket insurance policy or policies.

(b) The liability insurance shall insure Obligee from liability and property damage in any form and amount satisfactory to Obligee.

(c) Obligor may self-insure against the casualty risks and liability risks described above. If Obligor chooses this option, Obligor must furnish Obligee with a certificate and/or other documents which evidences such coverage.

(d) All insurance policies issued or affected by this Section shall be so written or endorsed such that the Obligee and its assignees are named additional insureds and loss payees and that all losses are payable to Obligor and Obligee or its assignees as their interests may appear. Each policy issued or affected by this Section shall contain a provision that the insurance company shall not cancel or materially modify the policy without first giving thirty (30) days advance notice to Obligee or its assignees. Obligor shall furnish to Obligee certificates evidencing such coverage throughout the Contract Term.

Section 5.02 Damage to or Destruction of Equipment. Obligor assumes the risk of loss or damage to the Equipment. If the Equipment or any portion thereof is lost, stolen, damaged, or destroyed by fire or other casualty, Obligor will immediately report all such losses to all possible insurers and take the proper procedures to obtain all insurance proceeds. At the option of Obligee, Obligor shall either (1) apply the Net Proceeds to replace, repair or restore the Equipment or (2) apply the Net Proceeds to the applicable Purchase Option Price. For purposes of this Section and Section 5.03, the term Net Proceeds shall mean the amount of insurance proceeds collected from all applicable insurance policies after deducting all expenses incurred in the collection thereof.

Section 5.03 Insufficiency of Net Proceeds. If there are no Net Proceeds for whatever reason or if the Net Proceeds are insufficient to pay in full the cost of any replacement, repair, restoration, modification or improvement of the Equipment, then Obligor shall, at the option of Obligee, either (1) complete such replacement, repair, restoration, modification or improvement and pay any costs thereof in excess of the amount of the Net Proceeds or (2) apply the Net Proceeds to the Purchase Option Price and pay the deficiency, if any, to the Obligee.

Section 5.04 Obligor Negligence. Obligor assumes all risks and liabilities, whether or not covered by insurance, for loss or damage to the Equipment and for injury to or death of any person or damage to any property whether such injury or death be with respect to agents or employees of Obligor or of third parties, and whether such property damage be to Obligor's property or the property of others (including, without limitation, liabilities for loss or damage related to the release or threatened release of hazardous substances under the Comprehensive Environmental Response, Compensation and Liability Act, the Resource Conservation and Recovery Act or similar or successor law or any State or local equivalent now existing or hereinafter enacted which in any manner arise out of or are incident to any possession, use, operation, condition or storage of any Equipment by Obligor), which is proximately caused by the negligent conduct of Obligor, its officers, employees and agents.

Section 5.05 Reimbursement. Obligor hereby assumes responsibility for and agrees to reimburse Obligee for all liabilities, obligations, losses, damages, penalties, claims, actions, costs and expenses (including reasonable attorneys' fees) of whatsoever kind and nature, imposed on, incurred by or asserted against Obligee that in any way relate to or arise out of a claim, suit or proceeding, based in whole or in part upon the negligent conduct of Obligor, its officers, employees and agents, or arose out of installation, operation, possession, storage or use of any item of the Equipment, to the maximum extent permitted by law.

VI. Title and Security Interest

Section 6.01 Title. Title to the Equipment shall vest in Obligor when Obligor acquires and accepts the Equipment. Title to the Equipment will automatically transfer to the Obligee in the event Obligor non-appropriates under Section 4.01 or in the event Obligor defaults under Section 9.01. In such event, Obligor shall execute and deliver to Obligee such documents as Obligee may request to evidence the passage of legal title to the Equipment to Obligee.

Section 6.02 Security Interest. To secure the payment of all Obligor's obligations under this Contract, as well as all other obligations, debts and liabilities, plus interest thereon, whether now existing or subsequently created, Obligor hereby grants to Obligee a security interest under the Uniform Commercial Code constituting a first lien on the Equipment described more fully on Exhibit A. Furthermore, Obligor agrees that any other collateral securing any other obligation(s) to Obligee, whether offered prior to or subsequent hereto, also secures this obligation. The security interest established by this section includes not only all additions, attachments, repairs and replacements to the Equipment but also all proceeds therefrom. Obligor authorizes Obligee to prepare and record any Financing Statement required under the Uniform Commercial Code to perfect the security interest created hereunder. Obligor agrees that any Equipment listed on Exhibit A is and will remain personal property and will not be considered a fixture even if attached to real property.

VII. Assignment

Section 7.01 Assignment by Obligee. All of Obligee's rights, title and/or interest in and to this Contract may be assigned and reassigned in whole or in part to one or more assignees or sub-assignees by Obligee at any time without the consent of Obligor. No such assignment shall be effective as against Obligor until the assignor shall have filed with Obligor written notice of assignment identifying the assignee. Obligor shall pay all Contract Payments due hereunder relating to such Equipment to or at the direction of Obligee or the assignee named in the notice of assignment. Obligor shall keep a complete and accurate record of all such assignments.

Section 7.02 Assignment by Obligor. None of Obligor's right, title and interest under this Contract and in the Equipment may be assigned by Obligor unless Obligee approves of such assignment in writing before such assignment occurs and only after Obligor first obtains an opinion from nationally recognized counsel stating that such assignment will not jeopardize the tax-exempt status of the obligation.

VIII. Maintenance of Equipment

Section 8.01 Equipment. Obligor shall keep the Equipment in good repair and working order, and as required by manufacturer's and warranty specifications. If Equipment consists of copiers, Obligor is required to enter into a copier maintenance/service agreement. Obligee shall have no obligation to inspect, test, service, maintain, repair or make improvements or additions to the Equipment under any circumstances. Obligor will be liable for all damage to the Equipment, other than normal wear and tear, caused by Obligor, its employees or its agents. Obligor shall pay for and obtain all permits, licenses and taxes related to the ownership, installation, operation, possession, storage or use of the Equipment. If the Equipment includes any titled vehicle(s), then

Obligor is responsible for obtaining such title(s) from the State and also for ensuring that Obligee is listed as First Lienholder on all of the title(s). Obligor shall not use the Equipment to haul, convey or transport hazardous waste as defined in the Resource Conservation and Recovery Act, 42 U.S.C. 6901 et. seq. Obligor agrees that Obligee or its Assignee may execute any additional documents including financing statements, affidavits, notices, and similar instruments, for and on behalf of Obligor which Obligee deems necessary or appropriate to protect Obligee's interest in the Equipment and in this Contract. Obligor shall allow Obligee to examine and inspect the Equipment at all reasonable times.

IX. Default

Section 9.01 Events of Default defined. The following events shall constitute an "Event of Default" under this Contract:

(a) Failure by Obligor to pay any Contract Payment listed on Exhibit B for fifteen (15) days after such payment is due according to the Payment Date listed on Exhibit B.

(b) Failure to pay any other payment required to be paid under this Contract at the time specified herein and a continuation of said failure for a period of fifteen (15) days after written notice by Obligee that such payment must be made. If Obligor continues to fail to pay any payment after such period, then Obligee may, but will not be obligated to, make such payments and charge Obligor for all costs incurred plus interest at the highest lawful rate.

(c) Failure by Obligor to observe and perform any warranty, covenant, condition, promise or duty under this Contract for a period of thirty (30) days after written notice specifying such failure is given to Obligor by Obligee, unless Obligee agrees in writing to an extension of time. Obligee will not unreasonably withhold its consent to an extension of time if corrective action is instituted by Obligor. Subsection (c) does not apply to Contract Payments and other payments discussed above.

(d) Any statement, material omission, representation or warranty made by Obligor in or pursuant to this Contract which proves to be false, incorrect or misleading on the date when made regardless of Obligor's intent and which materially adversely affects the rights or security of Obligee under this Contract.

(e) Any provision of this Contract which ceases to be valid for whatever reason and the loss of such provision would materially adversely affect the rights or security of Obligee.

(f) Except as provided in Section 4.01 above, Obligor admits in writing its inability to pay its obligations.

(g) Obligor defaults on one or more of its other obligations.

(h) Obligor becomes insolvent, is unable to pay its debts as they become due, makes an assignment for the benefit of creditors, applies for or consents to the appointment of a receiver, trustee, conservator, custodian, or liquidator of Obligor, or all or substantially all of its assets, or a petition for relief is filed by Obligor under federal bankruptcy, insolvency or similar laws, or is filed against Obligor and is not dismissed within thirty (30) days thereafter.

Section 9.02 Remedies on Default. Whenever any Event of Default exists, Obligee shall have the right to take one or any combination of the following remedial steps:

(a) With or without terminating this Contract, Obligee may declare all Contract Payments and other amounts payable by Obligor hereunder to the end of the then current Budget Year to be immediately due and payable.

(b) With or without terminating this Contract, Obligee may require Obligor at Obligor's expense to redeliver any or all of the Equipment and any additional collateral to Obligee as provided below in Section 9.04. Such delivery shall take place within fifteen (15) days after the Event of Default occurs. If Obligor fails to deliver the Equipment and any additional collateral, Obligee may enter the premises where the Equipment and any additional collateral is located and take possession of the Equipment and any additional collateral and charge Obligor for costs incurred. Notwithstanding that Obligee has taken possession of the Equipment and any additional collateral, Obligor shall still be obligated to pay the remaining Contract Payments due up until the end of the then current Original Term or Renewal Term. Obligor will be liable for any damage to the Equipment and any additional collateral caused by Obligor or its employees or agents.

(c) Obligee may take whatever action at law or in equity that may appear necessary or desirable to enforce its rights. Obligor shall be responsible to Obligee for all costs incurred by Obligee in the enforcement of its rights under this Contract including, but not limited to, reasonable attorney fees.

Section 9.03 No Remedy Exclusive. No remedy herein conferred upon or reserved to Obligee is intended to be exclusive and every such remedy shall be cumulative and shall be in addition to every other remedy given under this Contract now or hereafter existing at law or in equity. No delay or omission to exercise any right or power accruing upon any default shall impair any such right or shall be construed to be a waiver thereof.

Section 9.04 Return of Equipment and Storage.

(a) Surrender: The Obligor shall, at its own expense, surrender the Equipment, any additional collateral and all required documentation to evidence transfer of title from Obligor to the Obligee in the event of a default or a non-appropriation by delivering the Equipment and any additional collateral to the Obligee to a location accessible by common carrier and designated by Obligee. In the case that any of the Equipment and any additional collateral consists of software, Obligor shall destroy all intangible items constituting such software and shall deliver to Obligee all tangible items constituting such software. At Obligee's request, Obligor shall also certify in a form acceptable to Obligee that Obligor has complied with the above software return provisions and that they will immediately cease using the software and that they shall permit Obligee and/or the vendor of the software to inspect Obligor's locations to verify compliance with the terms hereto.

(b) Delivery: The Equipment and any additional collateral shall be delivered to the location designated by the Obligee by a common carrier unless the Obligee agrees in writing that a common carrier is not needed. When the Equipment and any additional collateral is delivered into the custody of a common carrier, the Obligor shall arrange for the shipping of the item and its insurance in transit in accordance with the Obligee's instructions and at the Obligor's sole expense. Obligor at its expense shall completely sever and disconnect the Equipment and any additional collateral or its component parts from the Obligor's property all without liability to the Obligee. Obligor shall pack or crate the Equipment and any additional collateral and all of the component parts of the Equipment and any additional collateral carefully and in accordance with any recommendations of the manufacturer. The Obligor shall deliver to the Obligee the plans, specifications, operation manuals or other warranties and documents furnished by the manufacturer or vendor on the Equipment and any additional collateral and such other documents in the Obligor's possession relating to the maintenance and methods of operation of such Equipment and any additional collateral.

(c) Condition: When the Equipment is surrendered to the Obligee it shall be in the condition and repair required to be maintained under this Contract. It will also meet all legal regulatory conditions necessary for the Obligee to sell or lease it to a third party and be free of all liens. If Obligee reasonably determines that the Equipment or an item of the Equipment, once it is returned, is not in the condition required hereby, Obligee may cause the repair, service, upgrade, modification or overhaul of the Equipment or an item of the Equipment to achieve such condition and upon demand, Obligor shall promptly reimburse Obligee for all amounts reasonably expended in connection with the foregoing.

(d) Storage: Upon written request by the Obligee, the Obligor shall provide free storage for the Equipment and any additional collateral for a period not to exceed 60 days after the expiration of the Contract Term before returning it to the Obligee. The Obligor shall arrange for the insurance described to continue in full force and effect with respect to such item during its storage period and the Obligee shall reimburse the Obligor on demand for the incremental premium cost of providing such insurance.

X. Miscellaneous

Section 10.01 Notices. All notices shall be sufficiently given and shall be deemed given when delivered or mailed by registered mail, postage prepaid, to the parties at their respective places of business as first set forth herein or as the parties shall designate hereafter in writing.

Section 10.02 Binding Effect. Obligor acknowledges this Contract is not binding upon the Obligee or its assignees unless the Conditions to Funding listed on the Documentation Instructions have been met to Obligee's satisfaction, and Obligee has executed the Contract. Thereafter, this Contract shall inure to the benefit of and shall be binding upon Obligee and Obligor and their respective successors and assigns.

Section 10.03 Severability. In the event any provision of this Contract shall be held invalid or unenforceable by any court of competent jurisdiction, such holding shall not invalidate or render unenforceable any other provision hereof.

Section 10.04 Amendments, Addenda, Changes or Modifications. This Contract may be amended, added to, changed or modified by written agreement duly executed by Obligee and Obligor. Furthermore, Obligee reserves the right to directly charge or amortize into the remaining balance due from Obligor, a reasonable fee, to be determined at that time, as compensation to Obligee for the additional administrative expense resulting from such amendment, addenda, change or modification requested by Obligor.

Section 10.05 Execution in Counterparts. This Contract may be simultaneously executed in several counterparts, each of which shall be an original and all of which shall constitute but one and the same instrument.

Section 10.06 Captions. The captions or headings in this Contract do not define, limit or describe the scope or intent of any provisions or sections of this Contract.

Section 10.07 Master Contract. This Contract can be utilized as a Master Contract. This means that the Obligee and the Obligor may agree to the financing of additional Equipment under this Contract at some point in the future by executing one or more Additional Schedules to Exhibit A and Exhibit B, as well as other exhibits or documents that may be required by Obligee. Additional Schedules will be consecutively numbered on each of the exhibits which make up the Additional Schedule and all the terms and conditions of the Contract shall govern each Additional Schedule.

Section 10.08 Entire Writing. This Contract constitutes the entire writing between Obligee and Obligor. No waiver, consent, modification or change of terms of this Contract shall bind either

party unless in writing and signed by both parties, and then such waiver, consent, modification or change shall be effective only in the specific instance and for the specific purpose given. There are no understandings, agreements, representations, conditions, or warranties, express or implied, which are not specified herein regarding this Contract, the Equipment or any additional collateral, financed hereunder. Any terms and conditions of any purchase order or other documents submitted by Obligor in connection with this Contract which are in addition to or inconsistent with the terms and conditions of this Contract will not be binding on Obligee and will not apply to this Contract.

Obligee and Obligor have caused this Contract to be executed in their names by their duly authorized representatives listed below.

Cedar City, Utah	**LensLock Inc.**
Signature	Signature
Printed Name and Title	Printed Name and Title

EXHIBIT A

DESCRIPTION OF EQUIPMENT

RE: Government Obligation Contract dated as of April 3, 2023, between LensLock Inc. (Obligee) and Cedar City, Utah (Obligor)

Below is a detailed description of all the items of Equipment including quantity, model number and serial number where applicable:

Forty Five (45) Gen 12 Body Camera Systems, Thirty (30) Titan V In-Car Systems, and One (1) Interrogation Room Package

Physical Address of Equipment after Delivery : 10 N. Main St., Cedar City, UT 84720

EXHIBIT B

PAYMENT SCHEDULE

RE: Government Obligation Contract dated as of April 3, 2023, between LensLock Inc. (Obligee) and Cedar City, Utah (Obligor)

Date of First Payment:	July 31, 2023
Original Balance:	$568,615.00
Total Number of Payments:	Five (5)
Number of Payments Per Year:	One (1)

Pmt No.	Due Date	Contract Payment	Applied to Interest	Applied to Principal	*Purchase Option Price
1	31-Jul-23	$129,323.00	$0.00	$129,323.00	$439,292.00
2	31-Jul-24	$109,823.00	$0.00	$109,823.00	$329,469.00
3	31-Jul-25	$109,823.00	$0.00	$109,823.00	$219,646.00
4	31-Jul-26	$109,823.00	$0.00	$109,823.00	$109,823.00
5	31-Jul-27	$109,823.00	$0.00	$109,823.00	$0.00

By signing below, Obligor acknowledges that its obligation to make the Contract Payments set forth in Exhibit B to the Contract includes repayment of the principal amount of $568,615.00, together with interest at 0.000%.

Furthermore, the amount financed by Obligor is $498,334.01 and such amount is the issue price of this Contract for federal income tax purposes. The difference between the principal amount of this Contract and the issue price is original issue discount, as defined in section 1288 of the Internal Revenue Code of 1986, as amended. The yield of this Contract for federal income tax purposes is 6.160%. Such issue price and yield will be stated in the applicable Form 8038-G.

Cedar City, Utah

_____
Signature

_____
Printed Name and Title

*Assumes all Contract Payments due to date are paid

EXHIBIT C

CERTIFICATE OF ACCEPTANCE

RE: Government Obligation Contract dated as of April 3, 2023, between LensLock Inc. (Obligee) and Cedar City, Utah (Obligor)

I, the undersigned, hereby certify that I am a duly qualified representative of Obligor and that I have been given the authority by the Governing Body of Obligor to sign this Certificate of Acceptance with respect to the above referenced Contract. I hereby certify that:

1. The Equipment described on Exhibit A has been delivered and installed in accordance with Obligor's specifications.
2. Obligor has conducted such inspection and/or testing of the Equipment as it deems necessary and appropriate and hereby acknowledges that it accepts the Equipment for all purposes.
3. Obligor has appropriated and/or taken other lawful actions necessary to provide moneys sufficient to pay all Contract Payments required to be paid under the Contract during the current Budget Year of Obligor, and such moneys will be applied in payment of all Contract Payments due and payable during such current Budget Year.
4. Obligor has obtained insurance coverage as required under the Contract from an insurer qualified to do business in the State.
5. No event or condition that constitutes or would constitute an Event of Default exists as of the date hereof.
6. The governing body of Obligor has approved the authorization, execution and delivery of this Contract on its behalf by the authorized representative of Obligor who signed the Contract.
7. Please list the Source of Funds (Fund Item in Budget) for the Contract Payments that come due under Exhibit B of this Contract.

Source of Funds : General Fund

By signing below, Obligor hereby authorizes the General Fund of the Obligor as a backup source of funds from which the Contract Payments can be made.

Cedar City, Utah

Signature

Printed Name and Title

EXHIBIT D

OBLIGOR RESOLUTION

RE: Government Obligation Contract dated as of April 3, 2023, between LensLock Inc. (Obligee) and Cedar City, Utah (Obligor)

At a duly called meeting of the Governing Body of the Obligor (as defined in the Contract) held on _____ the following resolution was introduced and adopted:

BE IT RESOLVED by the Governing Body of Obligor as follows:

1. **Determination of Need.** The Governing Body of Obligor has determined that a true and very real need exists for the acquisition of the Equipment described on Exhibit A of the Government Obligation Contract dated as of April 3, 2023, between Cedar City, Utah (Obligor) and LensLock Inc. (Obligee).

2. **Approval and Authorization.** The Governing Body of Obligor has determined that the Contract, substantially in the form presented to this meeting, is in the best interests of the Obligor for the acquisition of such Equipment, and the Governing Body hereby approves the entering into of the Contract by the Obligor and hereby designates and authorizes the following person(s) to execute and deliver the Contract on Obligor's behalf with such changes thereto as such person(s) deem(s) appropriate, and any related documents, including any Escrow Agreement, necessary to the consummation of the transaction contemplated by the Contract.

   Authorized Individual(s): _____
   (Typed or Printed Name and Title of individual(s) authorized to execute the Contract)

3. **Adoption of Resolution.** The signatures below from the designated individuals from the Governing Body of the Obligor evidence the adoption by the Governing Body of this Resolution.

Signature: _____
(Signature of Board Chairman or other authorized member of the Obligors Governing Body)

Printed Name & Title: _____
(Printed Name and Title of individual who signed directly above)

Attested By: _____
(Signature of Obligors Board Secretary or Board Clerk)

Printed Name & Title: _____
(Printed Name of individual who signed directly above)

NOTICE OF ASSIGNMENT

APRIL 3, 2023

LensLock Inc. (Obligee/Assignor) hereby gives notice of an Assignment between Obligee/Assignor and KS StateBank (Assignee) of the Government Obligation Contract (Contract) between Obligee/Assignor and Cedar City, Utah, dated as of April 3, 2023.

All Contract Payments coming due pursuant to the Contract shall be made to:

KS StateBank
P.O. Box 1608
Manhattan, Kansas 66505

LensLock Inc., Obligee/Assignor

Signature

Printed Name and Title

ACKNOWLEDGEMENT OF AND CONSENT TO ASSIGNMENT

Cedar City, Utah (Obligor) as party to a Government Obligation Contract dated as of April 3, 2023 between Obligor and LensLock Inc. (Obligee), hereby acknowledges receipt of a Notice of Assignment dated April 3, 2023 whereby Obligee gave notice of its assignment to KS StateBank of its right to receive all Contract Payments due from Obligor under the Contract and hereby consents to that Assignment. Pursuant to the Notice of Assignment from Obligee, Obligor agrees to deliver all Contract Payments coming due under the Contract to:

KS StateBank
P.O. Box 1608
Manhattan, Kansas 66505

Cedar City, Utah

Signature

Printed Name and Title

INSURANCE REQUIREMENTS

Pursuant to Article V of the Government Obligation Contract, you have agreed to provide us evidence of insurance covering the Equipment.

A Certificate of Insurance listing the information stated below should be sent to us no later than the date on which the equipment is delivered.

Insured:	**Certificate Holder:**
Cedar City, Utah	KS StateBank
10 North Main Street	1010 Westloop, P.O. Box 69
Cedar City, Utah	Manhattan, Kansas 66505-0069

1. **Equipment Description**
   - Forty Five (45) Gen 12 Body Camera Systems, Thirty (30) Titan V In-Car Systems, and One (1) Interrogation Room Package
   - Please include all applicable VIN's, serial numbers, etc.
2. **Deductible**
   - The deductible amounts on the insurance policy should not exceed $50,000.00.
3. **Physical Damage**
   - All risk coverage to guarantee proceeds of at least $568,615.00.
4. **Loss Payee**
   - KS StateBank AOIA (and/or Its Assigns) MUST be listed as loss payee.

Please forward certificate as soon as possible to: Email: ajl@lenslock.com

Please complete the information below and return this form along with the Contract.

Cedar City, Utah

Insurance Company: _____

Agent's Name: _____

Telephone #: _____

Fax #: _____

Address: _____

City, State Zip: _____

Email: _____

PREFERRED

*As an additional payment option for Obligor, we are now providing the option of ACH (Automatic Clearing House). By completing this form, Obligor is authorizing Obligee to withdraw said payment amount on said date.

DEBIT AUTHORIZATION

I hereby authorize KS StateBank Government Finance Department to initiate debit entries for the Payment Amount (including, but not limited to, any late fees, rate changes, escrow modifications, etc.). I acknowledge that KS StateBank Government Finance Department may reinitiate returned entries up to two additional times, to the account indicated below at the financial institution named below and to debit the same to such account for:

Contract Number	**Payment Amount**	**Frequency of Payments**
3361480	1 @ $129,323.00; 2-5 @ $109,823.00	Annual
Beginning _____ Month _____ Year	**Day of Month** Debits will be made according to Exhibit B of the Contract	

I acknowledge that the origination of ACH transactions to this account must comply with the provisions of U.S. law.

Financial Institution Name		**Branch**	
Address	**City**	**State**	**Zip**
Routing Number		**Account Number**	

Type of Account ☐ Checking ☐ Savings

If the account does not have sufficient funds, KS StateBank Government Finance Department may attempt, but shall have no obligation to continue to attempt to deduct the payment from the account. If the account has insufficient funds when KS StateBank Government Finance Department attempts to deduct a payment, KS StateBank Government Finance Department may terminate the automatic deduction of payments upon notice to borrower and me. Until such time as payment is made, borrower shall be responsible to make such payments, and all other payments that may be due to KS StateBank Government Finance Department regarding the above-referenced loan.

This authority is to remain in full force and effect until KS StateBank has received written notification from any authorized signer of the account of its termination in such time and manner as to afford KS StateBank a reasonable opportunity to act on it.

Obligor Name on Contract Cedar City, Utah	
Signature	**Printed Name and Title**
Tax ID Number 87-6000215	**Date**

PLEASE ATTACH COPY OF A VOIDED CHECK TO THIS FORM!

USA Patriot Act

USA Patriot Act requires identity verification for all new accounts. This means that we may require information from you to allow us to make a proper identification.

8038 REVIEW FORM

The 8038 form attached hereto is an important part of the documentation package and must be properly filled out and submitted to the Department of the Treasury in order for you to receive the lower tax-exempt rate. Unless you instruct us otherwise, we have engaged a Paid Preparer to assist in the filling out of this form. The Paid Preparer has filled out the relevant portions of this form based on the current understanding of what is required by the Department of the Treasury. The responses on this 8038 form are based on the dates and amounts which you have requested (structure of the transaction) and which are on the Payment Schedule.

1. Please review our responses for accuracy. If anything is inaccurate, please contact our office so that we can make proper revisions.
2. If the information provided to you on this form is accurate, please sign where indicated and return with the document package.
3. If there are any changes to the structure of the transaction that occur prior to funding which require a change to the 8038 form, we will make such changes and provide notification to you.
4. We will return to you a copy of the 8038 form that was mailed to the Department of the Treasury.

Important Note:
The IRS is now requesting information regarding tax-exempt issuers' and borrowers' written policies and procedures designed to monitor post-issuance compliance with the federal tax rules applicable to tax-exempt obligations (boxes 43 and 44). Do not check items 43 and 44 on the 8038 form unless you have established written procedures in accordance with the instructions referenced directly below. If you choose to "check" items 43 and/or 44, please be prepared to provide copies of such written procedures to the Paid Preparer or any representatives of the IRS upon request. Written procedures should contain certain key characteristics, including making provisions for:

- Due diligence review at regular intervals;
- Identifying the official or employee responsible for review;
- Training of the responsible official/employee;
- Retention of adequate records to substantiate compliance (e.g., records relating to expenditure of proceeds);
- Procedures reasonably expected to timely identify noncompliance; and
- Procedures ensuring that the issuer will take steps to timely correct noncompliance.

For additional guidance on this 8038 form, you can refer to the Documentation Instructions located on the following government website: http://www.irs.gov/app/picklist/list/formsInstructions.html, or contact your local IRS office.

Form **8038-G**
(Rev. October 2021)
Department of the Treasury
Internal Revenue Service

Information Return for Tax-Exempt Governmental Obligations

▶ Under Internal Revenue Code section 149(e)
▶ See separate instructions.
Caution: *If the issue price is under $100,000, use Form 8038-GC.*
▶ Go to www.irs.gov/F8038G for instructions and the latest information.

OMB No. 1545-0047

Part I Reporting Authority

Check box if **Amended Return** ▶ ☐

1	Issuer's name **Cedar City, Utah**	2	Issuer's employer identification number (EIN) **87-6000215**
3a	Name of person (other than issuer) with whom the IRS may communicate about this return (see instructions)	3b	Telephone number of other person shown on 3a
4	Number and street (or P.O. box if mail is not delivered to street address) / Room/suite **10 North Main Street**	5	Report number *(For IRS Use Only)* 3
6	City, town, or post office, state, and ZIP code **Cedar City, Utah**	7	Date of issue **04/03/2023**
8	Name of issue **Government Obligation Contract**	9	CUSIP number **None**
10a	Name and title of officer or other employee of the issuer whom the IRS may call for more information **Mr. Darin Adams, Chief**	10b	Telephone number of officer or other employee shown on 10a **(435) 865-5135**

Part II Type of Issue (enter the issue price). See the instructions and attach schedule.

11	Education	11		
12	Health and hospital	12		
13	Transportation	13		
14	Public safety	14	498,334	01
15	Environment (including sewage bonds)	15		
16	Housing	16		
17	Utilities	17		
18	Other. Describe ▶	18		
19	If obligations are TANs or RANs, check only box 19a ▶ ☐ If obligations are BANs, check only box 19b ▶ ☐			
20	If obligations are in the form of a lease or installment sale, check box ▶ ☑			

Part III Description of Bonds. Complete for the entire issue for which this form is being filed.

	(a) Final maturity date	(b) issue price	(c) Stated redemption price at maturity	(d) Weighted average maturity	(e) Yield
21	07/31/2027	$ 498,334.01	$ N/A	4.330 years	6.160 %

Part IV Uses of Proceeds of Bond Issue (including underwriters' discount)

22	Proceeds used for accrued interest			22	
23	Issue price of entire issue (enter amount from line 21, column (b))			23	
24	Proceeds used for bond issuance costs (including underwriters' discount)	24			
25	Proceeds used for credit enhancement	25			
26	Proceeds allocated to reasonably required reserve or replacement fund	26			
27	Proceeds used to refund prior tax-exempt bonds. Complete Part V.	27			
28	Proceeds used to refund prior taxable bonds. Complete Part V.	28			
29	Total (add lines 24 through 28)			29	
30	Nonrefunding proceeds of the issue (subtract line 29 from line 23 and enter amount here)			30	

Part V Description of Refunded Bonds. Complete this part only for refunding bonds.

31 Enter the remaining weighted average maturity of the tax-exempt bonds to be refunded ▶ _____ years

32 Enter the remaining weighted average maturity of the taxable bonds to be refunded ▶ _____ years

33 Enter the last date on which the refunded tax-exempt bonds will be called (MM/DD/YYYY) ▶ _____

34 Enter the date(s) the refunded bonds were issued ▶ (MM/DD/YYYY)

Part VI Miscellaneous

35	Enter the amount of the state volume cap allocated to the issue under section 141(b)(5)	35	
36a	Enter the amount of gross proceeds invested or to be invested in a guaranteed investment contract (GIC) (see instructions)	36a	
b	Enter the final maturity date of the GIC ▶ (MM/DD/YYYY)		
c	Enter the name of the GIC provider ▶		
37	Pooled financings: Enter the amount of the proceeds of this issue that are to be used to make loans to other governmental units	37	

38a If this issue is a loan made from the proceeds of another tax-exempt issue, check box ▶ ☐ and enter the following information:

b Enter the date of the master pool bond ▶ (MM/DD/YYYY)

c Enter the EIN of the issuer of the master pool bond ▶

d Enter the name of the issuer of the master pool bond ▶

39 If the issuer has designated the issue under section 265(b)(3)(B)(i)(III) (small issuer exception), check box ▶ ☑

40 If the issuer has elected to pay a penalty in lieu of arbitrage rebate, check box ▶ ☐

41a If the issuer has identified a hedge, check here ▶ ☐ and enter the following information:

b Name of hedge provider ▶

c Type of hedge ▶

d Term of hedge ▶

42 If the issuer has superintegrated the hedge, check box ▶ ☐

43 If the issuer has established written procedures to ensure that all nonqualified bonds of this issue are remediated according to the requirements under the Code and Regulations (see instructions), check box ▶ ☐

44 If the issuer has established written procedures to monitor the requirements of section 148, check box ▶ ☐

45a If some portion of the proceeds was used to reimburse expenditures, check here ▶ ☐ and enter the amount of reimbursement. ▶

b Enter the date the official intent was adopted ▶ (MM/DD/YYYY)

Signature and Consent

Under penalties of perjury, I declare that I have examined this return and accompanying schedules and statements, and to the best of my knowledge and belief, they are true, correct, and complete. I further declare that I consent to the IRS's disclosure of the issuer's return information, as necessary to process this return, to the person that I have authorized above.

▶ Signature of issuer's authorized representative Date ▶ Type or print name and title

Paid Preparer Use Only

Print/Type preparer's name	Preparer's signature	Date	Check ☐ if self-employed	PTIN
H. Evan Howe		04/05/2023		P01438994

Firm's Name ▶	Baystone Financial LLC	Firm's EIN ▶	48-1223987
Firm's Address ▶	10601 Mission Road, Suite 200, Leawood, KS 66206	Phone no.	(800) 752-3562

LENSLOCK

KS StateBank

Credit Application

Return completed application with required financial information.

Legal Name of Obligor: Cedar City Police Department, UT		Fed. Tax ID #: 87-6000215	
Address: 10 N Main St			
City: Cedar City	County: Iron	State: UT	Zip: 84720
Contact Person: Darin Adams		Title: Chief	
Phone: 435-865-5135		Fax: ( )	
Email Address: adarin@cedarcity.org			
Alternative Contact Person:		Title:	
Phone: ( )		Fax: ( )	
Email Address:			
Date municipal entity was established:		Does the obligor self-insure for property & liability insurance?	
Total Cost of Equipment/Project: $		Term (years):	
Delivery Date:		Payment Amount: $	
		Payments: ☐ Monthly ☐ Quarterly ☐ Semi-Annual ☐ Annual	
How will the contract payments be made? ☐ P-Card *Addt'l Fees Will Apply* ☐ Check ☐ ACH ☐ Other (specify)			
What fund will the remaining contract payments be made from? ☐ General ☐ Special (specify)			
Equipment Description:			
Replacement Equipment: ☐ Yes ☐ No		Age of current equipment:	Year purchased:
If not a replacement, why is the equipment needed?			
Describe the essential use of the equipment:			
Has the obligor ever defaulted or non-appropriated on a lease, bond, or legal obligation?		☐ Yes	☐ No
Will the obligor issue more than $10,000,000 in tax-exempt debt in this calendar year?		☐ Yes	☐ No

Financial Information Required

- **Two (2) most recently completed audits**
- **For any unaudited fiscal year provide comprehensive financial statements to include a Balance Sheet with Debt Service Commitments and an Income Statement in place of the audits**

Completed By (signature):	Printed Name and Title:	Date:

- ***Additional financial information may be requested if deemed necessary during credit review.***
- ***By signing this application Obligor representative agrees to the following statement: "Everything stated in this application is correct to the best of my knowledge. I understand Obligee will retain this application whether or not it is approved. Obligee is authorized to verify any information on this application with an appropriate third party as necessary to complete the credit review process."***

CEDAR CITY COUNCIL
AGENDA ITEM # 10
STAFF INFORMATION SHEET

TO: Mayor and City Council

FROM: Ken Nielson

DATE: April 19, 2023

SUBJECT: Consider the Active Transportation Committee and the Trails Committee combining into one Active Transportation Committee with Trails being a subcommittee.

DISCUSSION: Many of our appointed committee members participate on both committees with topics and shared information being similar in many instances.

The Trails subcommittee would still oversee the advancing of City paved Trails including their connections, as well as overseeing the funding sources for trails.

Grant opportunities could be applied for with support from the one committee and sharing the gathering of information.

Please consider whether these two committees should be combined.

Any questions, please let me know.

CEDAR CITY
CITY COUNCIL AGENDA ITEM 11
STAFF INFORMATION SHEET

To: Mayor and City Council

From: Jonathan Stathis

Council Meeting Date: April 19, 2023

Subject: **Consider an amendment to the City Traffic Ordinance to establish No Parking zones at the intersection of Kitty Hawk Drive and Airport Road.**

Discussion: As part of the new traffic signal at the intersection of Airport Road and Kitty Hawk Drive, there are some No Parking zones that are requested to be established. The purpose of the No Parking zones is to allow for safe turning movements for vehicles moving through the new signalized intersection.

The new traffic signal is currently under construction. The new lane striping and red curbing has already been completed. Based on feedback from one of the business owners on Kitty Hawk Drive, they are concerned about the red curb and lane striping in front of their business located at 1904 W. Kitty Hawk Drive.

The following are the proposed red curb locations as currently installed. If the No Parking restrictions are approved as currently installed, then the No Parking zones would be described in the ordinance as follows:

Option 1 – Red Curb as currently installed:

1. On the west side of Airport Road beginning at the intersection of Kitty Hawk Drive and extending 232 feet north of the intersection.
2. On the east side of Airport Road beginning at the intersection of Kitty Hawk Drive and extending 218 feet south of the intersection.
3. On the north side of Kitty Hawk Drive beginning at the intersection of Airport Road and extending 488 feet east of the intersection.

Based on discussions with Horrocks Engineers, the left turn pocket on the east leg of Kitty Hawk Drive could be reduced to a minimum length of 100 feet. This would reduce the length of the red curbing on the north side of Kitty Hawk Drive, thereby allowing for some on-street parking in front of the business at 1904 W. Kitty Hawk Drive. Refer to the attached exhibit which shows the modified lane striping based on a shorter left turn pocket. The modified lane striping is shown in green.

The following is an option that would decrease the red curb length on the north side of Kitty Hawk Drive:

Option 2 – Red Curb for shorter turn pocket on Kitty Hawk:

1. On the west side of Airport Road beginning at the intersection of Kitty Hawk Drive and extending 232 feet north of the intersection.
2. On the east side of Airport Road beginning at the intersection of Kitty Hawk Drive and extending 218 feet south of the intersection.
3. On the north side of Kitty Hawk Drive beginning at the intersection of Airport Road and extending 224 feet east of the intersection.

Option 2 will require that the lane striping and red curbing which has already been installed be modified. This would necessitate a change order to the construction contract. The estimated cost of the change order would be approximately $7,000.

The following table provides a current summary of the proposed budget for this project:

Airport Road & Kitty Hawk Drive Traffic Signal Project
Project Funding
(Account #10-79-732)

	Funding	Expenses	Balance
Funding –			
Capital Improvement Fund – Acct. #10-79-732	$350,000		
Expenses –			
Construction Contract		($197,231)	
Signal Equipment Materials Estimate		($96,100)	
Engineering		($25,900)	
Rocky Mountain Power service contract		($1,353)	
Change Orders #1 & #2		($12,880)	
Opticom Preemption System		($5,578)	
Materials Testing (0.5% of construction)		($986)	
Miscellaneous/Contingency		($2,000)	
Approx. cost of change order for new lane striping/red curb		($7,000)	
Totals –	**$350,000**	**($349,028)**	**$972**

If approved, City Ordinance section 35-10-B will need to be amended to add these locations to the list of restricted parking areas.

Proper signage would need to be installed and maintained by the City, if these No Parking restrictions are approved.

Please consider whether to approve the No Parking restrictions at the intersection of Airport Road and Kitty Hawk Drive. If the parking restrictions are approved, then the selected option will also need to be approved.

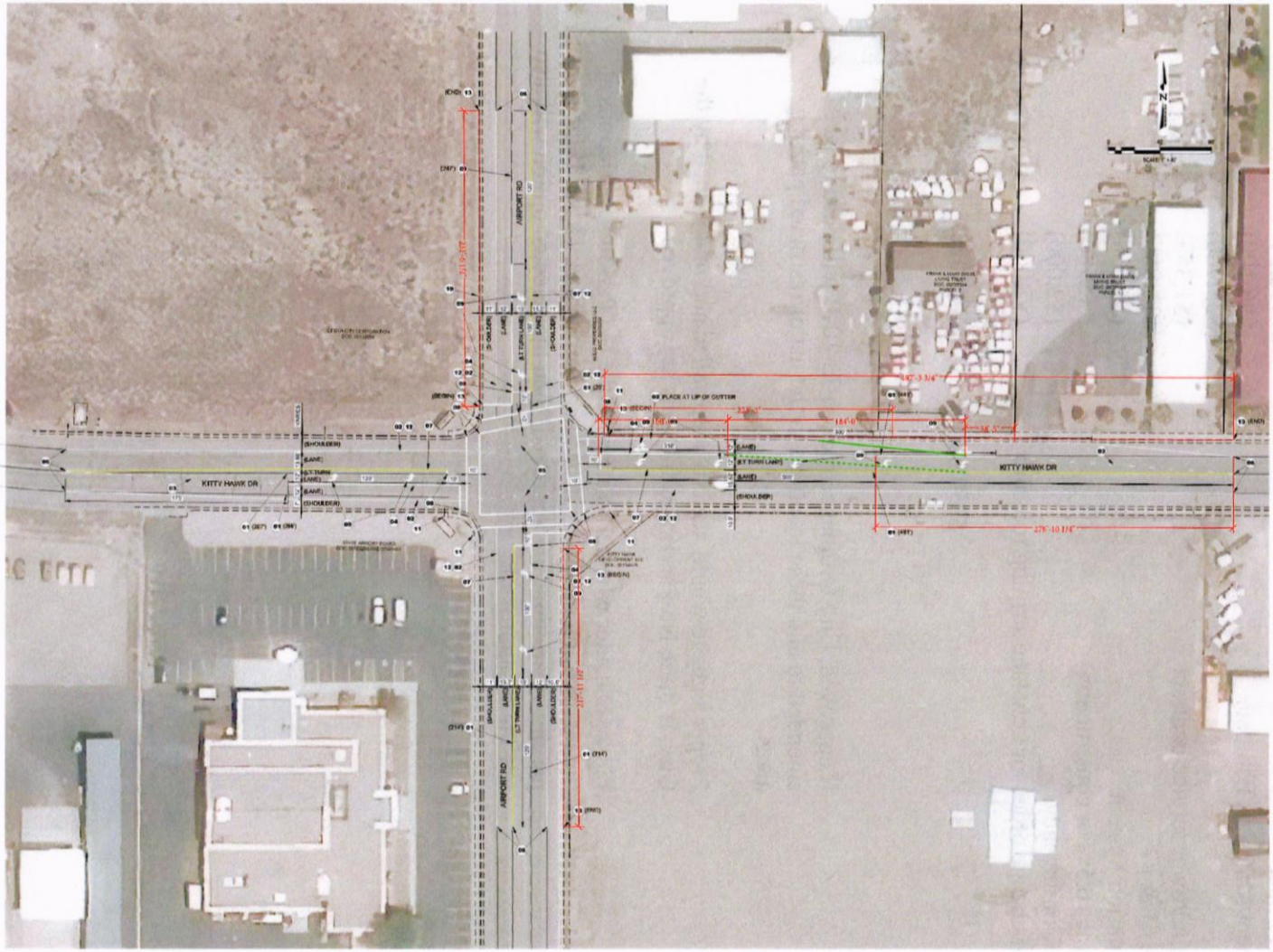

SIGNING & STRIPING CONSTRUCTION KEY NOTES:

01 REMOVE PAVEMENT MARKING PAINT REQ'D
02 4" SOLID WHITE LINE
03 4" DOTTED WHITE LINE
04 8" SOLID WHITE LINE
05 2" DOTTED WHITE LINE
06 MATCH EXISTING STRIPING
07 4" SOLID DOUBLE YELLOW LINE
08 12" SOLID WHITE STOP LINE (STOP LINE, CROSSWALK)
09 PAVEMENT MESSAGE PAINT REQ'D
10 EXISTING COAL CREEK DETOUR SIGN (PROTECT IN PLACE)
11 REMOVE SIGN REQ'D
12 PAINT OVER EXISTING STRIPE
13 NO PARKING CURB REQ'D (PAINTED RED)

NOTES:

1. ALL DIMENSIONS ARE IN FEET UNLESS OTHERWISE NOTED
2. USE NON-DESTRUCTIVE MEANS FOR PAVEMENT MARKING REMOVALS. SUCH AS HIGH PRESSURE WATER SPRAYING OR SAND BLASTING.
3. THE FOLLOWING ITEMS REQUIRE VERIFICATION PRIOR TO PERFORMING THE WORK. CONTACT SHANE JOHNSON AT 435-233-7365, PRIOR TO PERFORMING ANY OF THE FOLLOWING ITEMS OF WORK
   3.1 REMOVAL OF STRIPING
   3.2 REMOVAL OF SIGNS
   3.3 PLACEMENT OF PAVEMENT MARKING TAPE
   3.4 PLACEMENT OF PAVEMENT MARKINGS
4. TRAFFIC PAINT SHALL CONFORM TO THE LATEST REQUIREMENTS CONTAINED IN THE STATE OF UTAH DEPARTMENT OF TRANSPORTATION "STANDARD SPECIFICATIONS FOR ROAD AND BRIDGE CONSTRUCTION

ITEM	QUANTITY	UNIT
REMOVE PAVEMENT MARKING PAINT REQ'D	2206	FOOT
PAVEMENT MARKING PAINT REQ'D *	46	GAL
PAVEMENT MESSAGE PAINT REQ'D	17	EACH
NO PARKING CURB REQ'D (PAINTED RED)	550	FOOT
REMOVE SIGN REQ'D	4	EACH

* ONE APPLICATION OF PAINT

PAVEMENT MARKING LINE DIMENSIONS

TYPE	WIDTH (INCHES)	LENGTH (FT)	GAP (FT)
SOLID LINE	4	CONTINUOUS	N/A
SOLID LINE	8	CONTINUOUS	N/A
BROKEN LINE	4	10	30
LANE DROP	8	3	9
DOTTED LINE	4	2	4
DOTTED LINE	8	2	6

PAVEMENT MARKING PAINT SUMMARY

	2" WHITE		4" WHITE				4" YELLOW		8" WHITE		12" WHITE		PAVEMENT MESSAGE	REMOVE PAVEMENT MARKING PAINT	REMARKS
	300 FT/GAL		190 FT/GAL		190 FT/GAL		95 FT/GAL		55 FT/GAL		63 FT/GAL				
	DOTTED		SOLID		DOTTED		DOUBLE SOLID		SOLID		SOLID				
	FEET	GALLON	FEET	GALLON	FEET	GALLON	FEET	GALLON	FEET	GALLON	FEET	GALLON	EACH	FEET	
AIRPORT RD			915	4.82			440	4.63	720	2.32	347	5.51	4	711	
KITTY HAWK DR	138	0.37	1904	8.44	359	1.89	777	8.18	430	4.62	324	5.14	13	1495	
SUB-TOTAL	138	0.37	2819	13.26	359	1.89	1217	12.81	580	6.94	671	10.65			
TOTAL	46												17	2206	

HORROCKS ENGINEERS
505 South Bluff St., Suite 101
St. George, UT 84770
(435) 986-7888
www.horrocks.com

DESIGNED AB
DRAWN SM
CHECKED TA

DRAWING INFO
DATE 10/10/22
SCALE 1" = 40'
REV # DATE
PROJ. NO. UT-5966-22

APPROVED
PROFESSIONAL ENGINEER
No. 5585117
TYCHO C. FOX
STATE OF UTAH
SIGNATURE DATE

PROJECT
KITTY HAWK DR & AIRPORT RD
SIGNAL PROJECT
PAGE SUBJECT
SIGNING & STRIPING

OWNER
Cedar City
10 N. MAIN STREET
CEDAR CITY, UT 84720
(435) 586-2950

WARNING
0 1 2
IF THIS BAR DOES NOT MEASURE 1" THEN DRAWING IS NOT TO SCALE

SHEET
SS-01
PAGE
03

H:\2022\UT-5966-22 Cedar City Airport and Kitty Hawk Signal\Project Data\Sheet_Files\Signals_Lighting\SS-01.dwg Shannon McLendon 10/10/2022 3:03 PM

CEDAR CITY
CITY COUNCIL AGENDA ITEM 12
STAFF INFORMATION SHEET

To: Mayor and City Council

From: Jonathan Stathis

Council Meeting Date: April 19, 2023

Subject: **Consider an Engineering Standards variance for Detail C6 regarding expansion joint spacing in concrete sidewalk.**

Discussion: MS Concrete has requested a variance to the City Engineering Standards that would allow expansion joint spacing in concrete sidewalk to be increased from 40 feet to 100 feet. MS Concrete is planning to begin installing concrete sidewalk using a slip form machine. Typically, sidewalk is installed by using hand forms and then pouring the concrete straight out of the concrete mixer truck.

The slip form machine is used by feeding the concrete into a hopper in the machine, then the concrete is laid as the machine moves along the alignment of the sidewalk. This method has the potential to save significant time in the process of installing the sidewalk. Slip form machines have been used extensively in Cedar City for the installation of curb & gutter, and this process has been very successful over the years. Below is a picture of a slip form machine that is installing curb & gutter. The slip form process for sidewalk would be similar to this.

As part of the slip form process, MS Concrete is proposing to increase the distance between expansion joints in the concrete sidewalk. An expansion joint provides a physical separation between sections of sidewalk in order to allow for expansion of concrete due to temperature change. The following shows the City's detail drawing for an expansion joint.

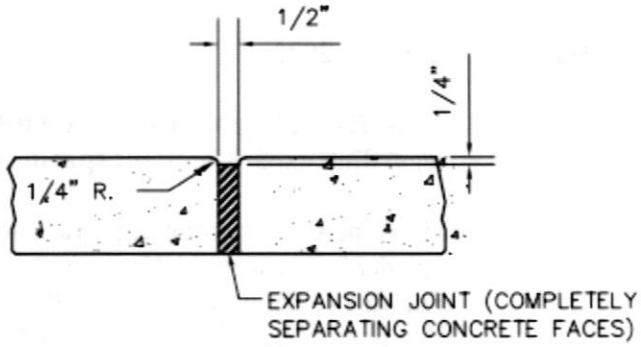

EXPANSION JOINT

N.T.S.

The current standard in Detail C6 (see attached) requires 40-foot intervals for the expansion joints. MS Concrete is requesting a variance to increase the interval to 100 feet when using the slip form machine.

MS Concrete would like to do some test areas using this process in Old Sorrel Ranch Subdivision Phases 4 and 5, as well as the American Packaging project in Port 15. These projects will be done within the next several weeks. The sidewalk in the test areas will be monitored for signs of stress, cracking, etc. If it is found that the test areas show an acceptable product, then a proposal can be made to make this a permanent change in the Engineering Standards.

Calculations for expansion of concrete show the following:

- Coefficient of Expansion of concrete = 0.0000055/°F
- Length of concrete = 100 feet
- Temperature range can vary from approximately 35° at pour to 105° max. for a difference of 70°.

Concrete Expansion for 100' length = (0.00000055/°F)*(100 ft.)*(70°) = 0.0385' = 0.46 inches

The required expansion joint width is 0.5 inches which will accommodate the anticipated expansion over the full 100-foot length. Friction on the bottom of the slab will reduce some of the movement as well.

Please consider whether to grant the requested variance to the City's Engineering Standards.

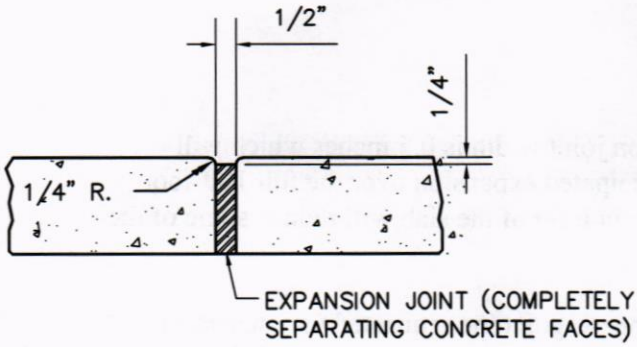

EXPANSION JOINT

N.T.S.

NOTE:

1. ON ALL CURB RETURNS EXPANSION JOINTS SHALL BE PLACED AT P.C. AND P.T. OF THE SIDEWALK.
2. ANY REPLACED SECTIONS OF SIDEWALK SHALL HAVE AN EXPANSION JOINT INSTALLED TO MAINTAIN THE 40' MAX. SPACING.
3. PROVIDE 5'x5' PASSING SPACES AT 200' MAX. INTERVALS WHERE SIDEWALK WIDTH IS LESS THAN 5'. DRIVEWAYS & OTHER PAVED AREAS MAY BE USED AS A PASSING SPACE WHERE A MINIMUM 5' WIDE AREA IS PROVIDED, & 2% CROSS-SLOPE REQUIREMENT IS MET.
4. THE 5'x5' PASSING SPACE IS REQUIRED IN ALL ZONES WHERE SIDEWALK IS LOCATED.
5. WHERE SIDEWALKS CROSS DRIVEWAY APPROACHES BEHIND A TYPE D CURB & GUTTER, MINIMUM SIDEWALK THICKNESS SHALL BE 6" THICK REINFORCED WITH #4 BARS @ 16" O.C. BOTH WAYS.

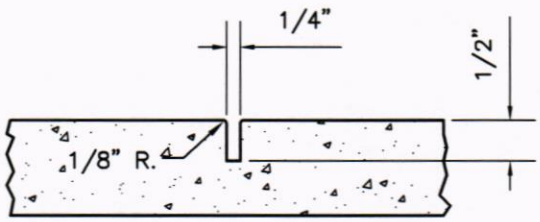

CONTRACTION JOINT

N.T.S.

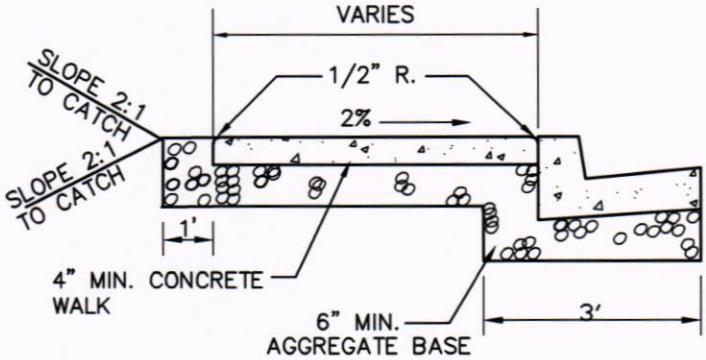

TYPICAL SECTION

N.T.S.

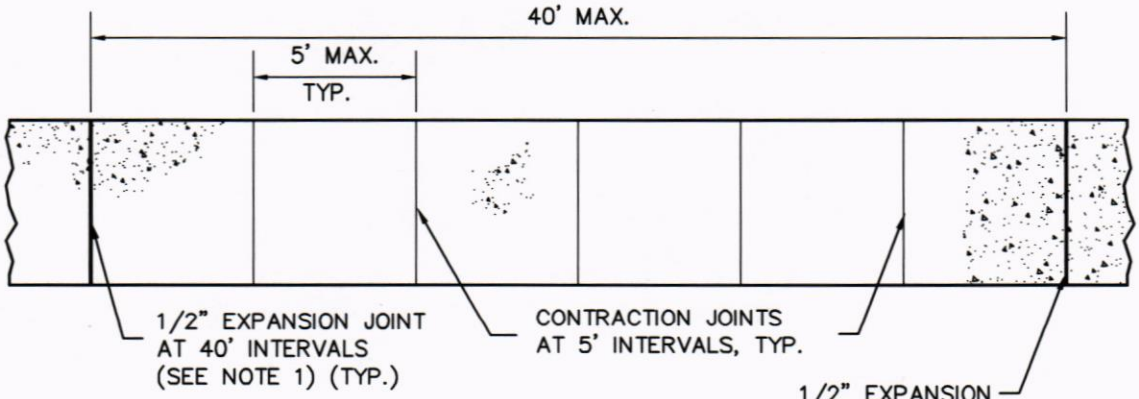

PLAN

N.T.S.

SHEET NO.		REVISIONS					
C6	CONCRETE SIDEWALK	DATE	DESCRIPTION	BY	CEDAR CITY 10 NORTH MAIN STREET CEDAR CITY, UTAH 84720 PH. (435) 586-2963	SCALE: N.T.S.	DATE: 7/2021
FILE: C06		7/2021	NOTES 3 AND 4 ADDED	J.A.S.		DRAWN: T.B.M.	CHECKED: J.A.S.