PUBLIC NOTICE is hereby given pursuant to Utah Code §52-4-202, that the Administrative Control Board (the "Board") of the North Summit Fire District (the "District") will hold a special work session and meeting on **Thursday, February 9, 2023,** beginning at **6:00PM** at the Summit County Courthouse, Executive Conference Room (2nd Floor), 60 N. Main St., Coalville, UT 84017

Zoom https://us02web.zoom.us/j/82555909958
or
To listen by phone only: Dial 346-248-7799 Webinar ID: 825 5590 9958

SCAN ME

Members of the Board, presenters, and members of public, may attend by electronic means, using Zoom (phone or video). Such members may fully participate in the proceedings as if physically present. The anchor location for purposes of the electronic meeting is the same as listed above.

AGENDA

1. **Call meeting to order**

2. **Roll call**

3. **Pledge of Allegiance**

4. **Closed session in compliance with Utah Code §52-4-205(1) as needed, to discuss:**
   a. Purchase, exchange, or lease of real property
   b. Pending or reasonably imminent litigation
   c. Personnel – to discuss the character, competence, or physical or mental health of an individual

5. **Reconvene in Open Meeting**

6. **Consideration of Approval**

   a. Discussion and possible approval of Siddons-Martin engine repairs or replacement option.

   b. Discussion and possible approval of the ImageTrend software contract. (Ben Nielson)

NOTICE OF SPECIAL ACCOMODATION DURING PUBLIC MEETINGS
Individuals with questions, comments, or needing special accommodations pursuant to the Americans with Disabilities Act regarding this meeting may contact Tyler Rowser at (435) 901-0102

c. Treasurer Report (Mike Novak)

d. Chief's Report. Discussion of current operational status. (Ben Nielson)

e. Review and possible approval of Accounts Payable. (Tyler Rowser)

f. Review and possible approval of the meeting minutes of; October 20, 2022, October 24, 2022, and January 12, 2023

7. <u>Board Comments.</u>

8. <u>Adjourn.</u>

Siddons-Martin Emergency Group
7285 S 700 West
Midvale UT USA 84047
Phone #:() -
Fax #: () -

Invoice Number: 38404700
Tag Number: 4-CL-11.28
Date and Time In: 11/21/2022 - 9:03 AM
Date and Time Out: 11/21/2022 - 9:03 AM
Promised Date - Time: 11/21/2022 - 9:07 AM
Cashed Out Date:

Remit To: PO Box 679827 Dallas, TX 75267-9827

Service Advisor: (A0M9) Karston Gardner

Summit County
PO Box 128
COALVILLE UT 84017

1254275

Work: (435) 336-3115

Veh Info: 2575-B 95 SPARTAN Cstm Pumper RED
Serial Numbers: 4S7AT9D01SC017304 PUMP SN# 67200

In-Srv: **Miles/Hrs In:** 6107 **Out:** 58710 **Plate #:**
Color Ex: RED **Int:**

Comments

1.19 AWA CUSTOMER
1.17 TRUCK TOWED TO SERVICE CENTER
1.4 EMAILED CHIEF. AWA TRANPORT TO SHOP
12.29 Called
12.20 called CHief
12.5 AWA DEPT FOR PICK UP DATE
11.28 AWA TRUCK TO BE TOWED IN
APPT 11-28

Repair	VIN	Second VIN	Mech #	Type	Labor	Discount	Total
1	SC017304	N# 67200	A0QN	Wholesale	$7,537.50	$0.00	$7,537.50

ENGINE MAKING NOISE/
CAUSE: ENGINE FAILED OIL SATURATED WITH METAL
HAS NOT BEEN CHANGED SINCE 8-2012

Description		Qty	Ret. Price	Savings	Selling Price	Ext Discount	Ext Price
12.7L S60	ENGINE, REMANUFACTURED	1.00	$20,000.00	$0.00	$20,000.00	$0.00	$20,000.00
NPN-38	FLUIDS	1.00	$500.00	$0.00	$500.00	$0.00	$500.00
NPN-38	FILTERS	1.00	$200.00	$0.00	$200.00	$0.00	$200.00
NPN-38	RADIATOR REPAIR	1.00	$480.00	$0.00	$480.00	$0.00	$480.00
42-1130	HOSE,COOLANT,90 DEG,2.50,SIL	2.00	$185.00	$0.00	$185.00	$0.00	$370.00

Parts Total: $21,550.00 **Labor Total:** $7,537.50 **Job Total:** $29,087.50

2	SC017304	N# 67200		Reserved	$0.00	$0.00	$0.00

104
CORRECTION: COMPLIMENTARY INSPECTION OF APPARATUS

Parts Total: **Labor Total:** $0.00 **Job Total:** $0.00

3	SC017304	N# 67200		Reserved	$0.00	$0.00	$0.00

QC

Parts Total: **Labor Total:** $0.00 **Job Total:** $0.00

4	SC017304	N# 67200		Reserved	$695.00	$0.00	$695.00

TRANS SERVICE
CAUSE: OVER DUE

Parts Total: **Labor Total:** $695.00 **Job Total:** $695.00

5	SC017304	N# 67200		Reserved	$0.00	$0.00	$0.00

DIFF SERVICE
CAUSE: OVER DUE

Parts Total: **Labor Total:** $0.00 **Job Total:** $0.00

Siddons-Martin Emergency Group
7285 S 700 West
Midvale UT USA 84047
Phone #:() -
Fax #: () -

Invoice Number: 38404700
Tag Number: 4-CL-11.28
Date and Time In: 11/21/2022 - 9:03 AM
Date and Time Out: 11/21/2022 - 9:03 AM
Promised Date - Time: 11/21/2022 - 10:00 AM
Closed Out Date:

ESTIMATE
NOT AN INVOICE

Remit To: PO Box 679827 Dallas, TX 75267-9827

Service Advisor: (A0M9) Karston Gardner

Summit County 1254275
PO Box 128
COALVILLE UT 84017

Work: (435) 336-3115

Veh Info: 2575-B 95 SPARTAN Cstm Pumper RED
Serial Numbers: 4S7AT9D01SC017304 PUMP SN# 67200

In-Srv: Miles/Hrs In: 6107 Out: 58710 Plate #:
Color Ex:RED Int:

Comments

1.19 AWA CUSTOMER
1.17 TRUCK TOWED TO SERVICE CENTER
1.4 EMAILED CHIEF. AWA TRANPORT TO SHOP
12.29 Called
12.20 called CHief
12.5 AWA DEPT FOR PICK UP DATE
11.28 AWA TRUCK TO BE TOWED IN
APPT 11-28

6	SC017304	N# 67200		Reserved		$395.00	$0.00	$395.00
TCASE SERVICE CAUSE: OVER DUE								
			Parts Total:	Labor Total:	$395.00	Job Total:		$395.00
7	SC017304	N# 67200		Reserved		$425.00	$0.00	$425.00
PUMP TEST CAUSE: REQUIRED								
			Parts Total:	Labor Total:	$425.00	Job Total:		$425.00
8	SC017304	N# 67200		Reserved		$3,350.00	$0.00	$3,350.00
RADIATOR/ HOSES CAUSE: RADIATOR HAS FAILED/ SIGNIFICANT LEAK								
SUBLET	REFIRBIS RADIATOR			1.00	$600.00	$0.00	$600.00	$0.00 $600.00
COOLANT	PRESTONE CMD ELC CORGUARD NF			10.00	$18.00	$0.00	$18.00	$0.00 $180.00
42-1130	HOSE,COOLANT,90 DEG,2.50,SIL			4.00	$180.00	$0.00	$180.00	$0.00 $720.00
			Parts Total:	$1,500.00	Labor Total:	$3,350.00	Job Total:	$4,850.00
9	SC017304	N# 67200		Reserved		$7,537.50	$0.00	$7,537.50
MULTIPLE WATER LEAKS/ SYSTEM NEEDS TO BE GONE THROUGH ESTIMATE IS JUST A START. CAUSE: MULTIPLE WATER SYSTEM AND VALVE FAILURES.								
9147	3" & 3.5" VALVE REPAIR KIT WITH S/S BALL			5.00	$235.00	$0.00	$235.00	$0.00 $1,175.00
9146	REPAIR KIT, 2.5" WITH S/S BALL			5.00	$165.00	$0.00	$165.00	$0.00 $825.00
9145	2" VALVE REPAIR KIT WITH S/S BALL, G2			5.00	$160.00	$0.00	$160.00	$0.00 $800.00
			Parts Total:	$2,800.00	Labor Total:	$7,537.50	Job Total:	$10,337.50
10	SC017304	N# 67200		Reserved		$0.00	$0.00	$0.00
NOTE: MAJORITY OF THE SYSTEMS ARE SEVERELY OUTDATED AND PARTS ARE MOSTLY OBSOLETE BECAUSE OF AGE.								
			Parts Total:	Labor Total:	$0.00	Job Total:		$0.00

Siddons-Martin Emergency Group
7285 S 700 West
Midvale UT USA 84047
Phone #:() -
Fax #: () -

Invoice Number: 38404700
Tag Number: 4-CL-11.28
Date and Time In: 11/21/2022 - 9:03 AM
Date and Time Out: 11/21/2022 - 9:03 AM
Promised Date - Time: 11/21/2022 - 10:00 AM
Closed Out Date:

ESTIMATE NOT AN INVOICE

Remit To: PO Box 679827 Dallas, TX 75267-9827

Service Advisor: (A0M9) Karston Gardner

There will be a 30% restocking fee charged for all returned items based upon the sales price of the item. All Special Order items are ineligible for returns. Special order items include, but are not limited to, any customer driven specification of the item requested or ordered at the direct request of customer.

Parts Total:	$25,250.00
Core Total:	$0.00
Freight Total:	$0.00
Sublet Total:	$600.00
Labor Total:	$19,940.00
- Labor Discount:	$0.00
Other Charges:	$0.00
Shop Supplies:	$250.00
Sub Total:	$46,040.00
- Parts Discount:	$0.00

Ext Price:	$46,040.00
Sales Tax:	$0.00
Total:	$46,040.00
- Deductible:	$0.00
- Deposits:	$0.00
Amount Due:	**$46,040.00**
Amt Tendered:	$0.00
Chg Returned:	$0.00

ESTIMATE NOT AN INVOICE

We (the Customer) are responsible for all costs and expenses listed on this invoice. I, the undersigned, am authorized to agree, on behalf of the owner of the vehicle, to pay all outstanding charges in accordance with the terms and conditions agreed between us and the Company. Unless otherwise stated, all invoices are due and payable 30 days from the date of invoice. We have granted the Company, its employees, and agents permission to operate the vehicle on any streets as necessary for testing, inspection, or other services requested. We are responsible for insuring the vehicle at all times. We release the Company for any loss, damage, or theft of any items left in the vehicle for any reason. All parts and labor on this invoice are warranted for purpose and fitness for 90 days from the date of the invoice. In order to recover against any warranty, we agree to return the vehicle to the Company for all warranty repairs. Failure to return the vehicle cancels all warranties provided. All other warranties are expressly disclaimed by Company.Acknowledged and Received by:

_____

ITEM NO.	PART NUMBER	QTY.	DESCRIPTION
1	AP-00-009216	1	CHASSIS ASSEMBLY
2	AP-00-011152	1	PUMP HOUSE ASSEMBLY
3	AP-00-011594	1	BODY ACCESSORIES
4	AP-00-011981	1	REAR STEP WELD ASSEMBLY
5	AP-00-012173	1	ELECTRICAL COMPONENTS

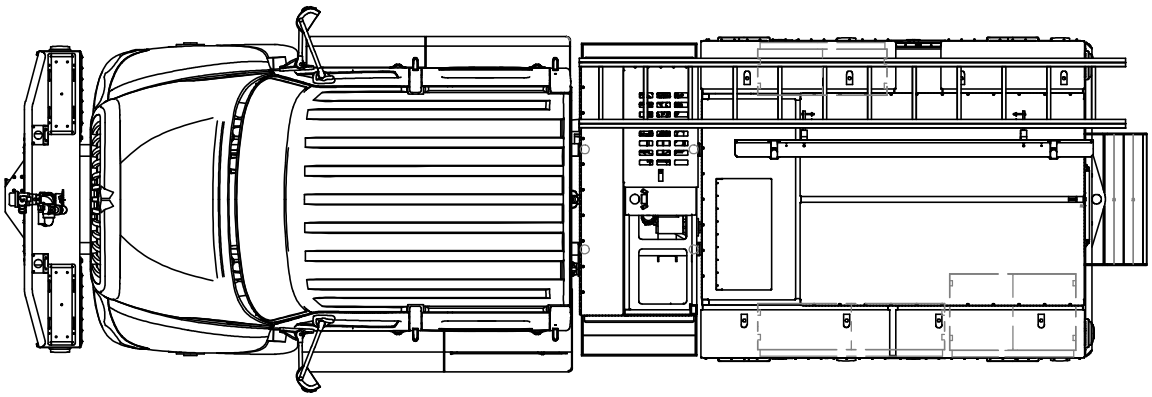

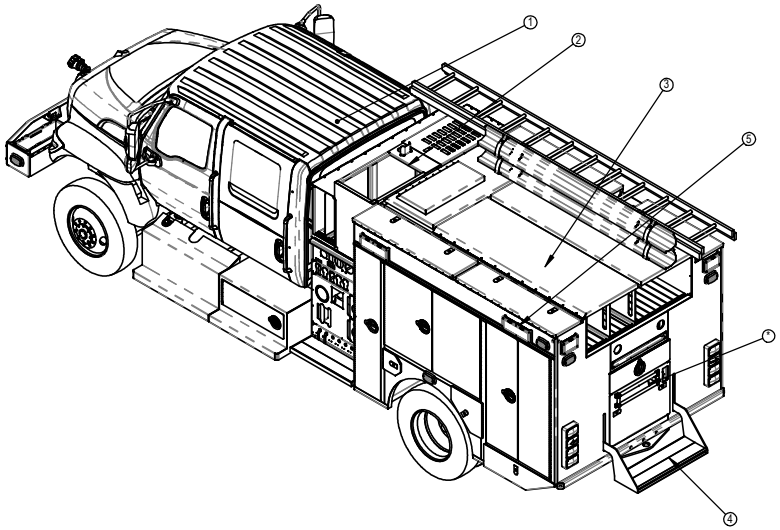

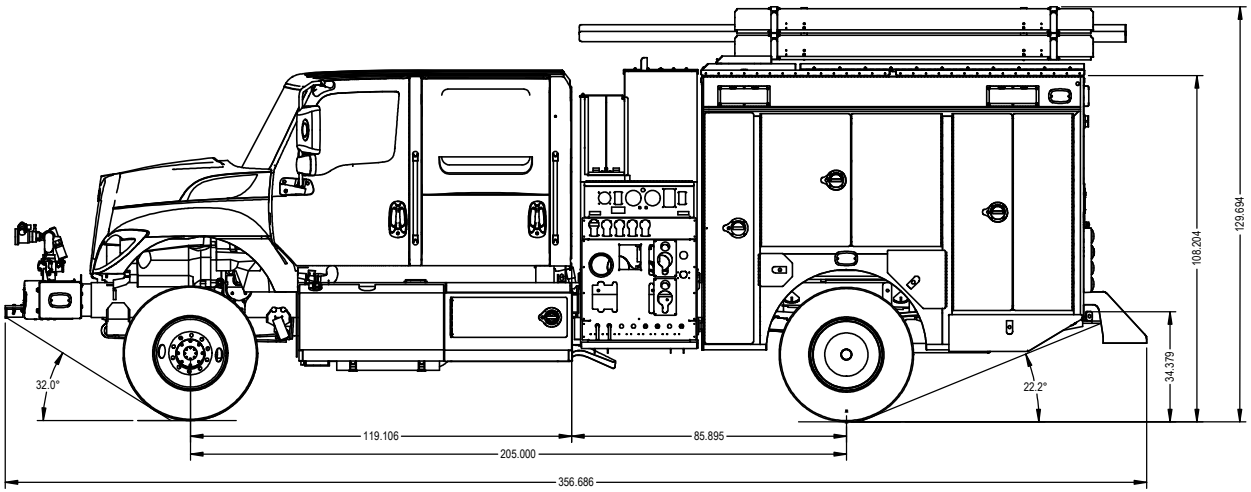

12000 FRONT AXLE

30000 REAR AXLE

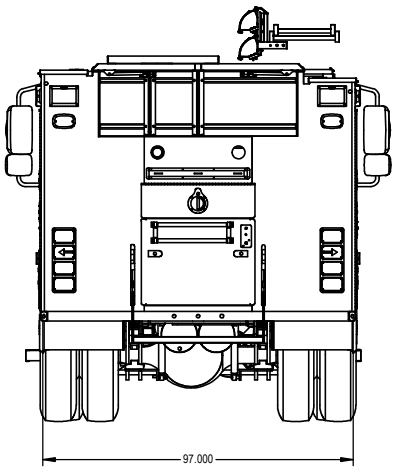

	INITIALS	DATE
MDL'D BY:	MT	06/05/2020
DRAWN BY:	MT	07/30/2020
ENG APPR:	—	XX/XX/XX
MFG APPR:	—	XX/XX/XX

MATERIAL:

MATERIAL SIZE:

THICKNESS: WEIGHT: 12110.46

REVISIONS			
REV.	DESCRIPTION	INITIALS	DATE

BOISE MOBILE EQUIPMENT, INC.
900 BOEING ST, BOISE, ID 83705
WWW.BMEFIRE.COM (800) 445-8342

PROPRIETARY AND CONFIDENTIAL
THIS DRAWING IS THE PROPERTY OF BOISE MOBILE EQUIPMENT, INC. ITS SUBMISSION DOES NOT INCLUDE OR CARRY THE RIGHT TO MAKE, USE, OR SELL WHAT IS ILLUSTRATED WITHOUT THE WRITTEN CONSENT OF BOISE MOBILE EQUIPMENT, INC.

UNLESS OTHERWISE SPECIFIED
DIMENSIONS ARE IN INCHES
TOLERANCES:
FRACTIONAL ±1/16
ANGULAR: MACH ±.5 BEND ±1
TWO PLACE DECIMAL ±.020
THREE PLACE DECIMAL ±.005
DO NOT SCALE DRAWING

DESCRIPTION: TOP LEVEL

PART NO: AP-00-007784

MTL P/N:

REV: -

SHEET 1 OF 1

DRIVER'S STORAGE COMPARTMENTS				
LETTER	WIDTH (W)	HEIGHT (H)	DEPTH (D)	CAPACITY
D1	51.00	39.000	13.50/23.00	27.80
D2	34.00	58.00	13.50/22.50	28.71
TOTAL (CUBIC FEET)				56.51

PASSENGER'S STORAGE COMPARTMENTS				
LETTER	WIDTH (W)	HEIGHT (H)	DEPTH (D)	CAPACITY
P1	51.00	39.00	12.00	15.62
P2	34.00	58.00	12.00/22.00	19.78
B1	27.00	34.00	25.00	31.64
TOTAL (CUBIC FEET)				67.04

ISSUED FOR CONCEPTUAL INFORMATION ON THIS DOCUMENT IS INTENDED ONLY AS CONCEPTUAL NOT INTENDED AS A SUBMITTAL FOR CONSTRUCTION PURPOSES. DESIGN IS SUBJECT TO CHANGE

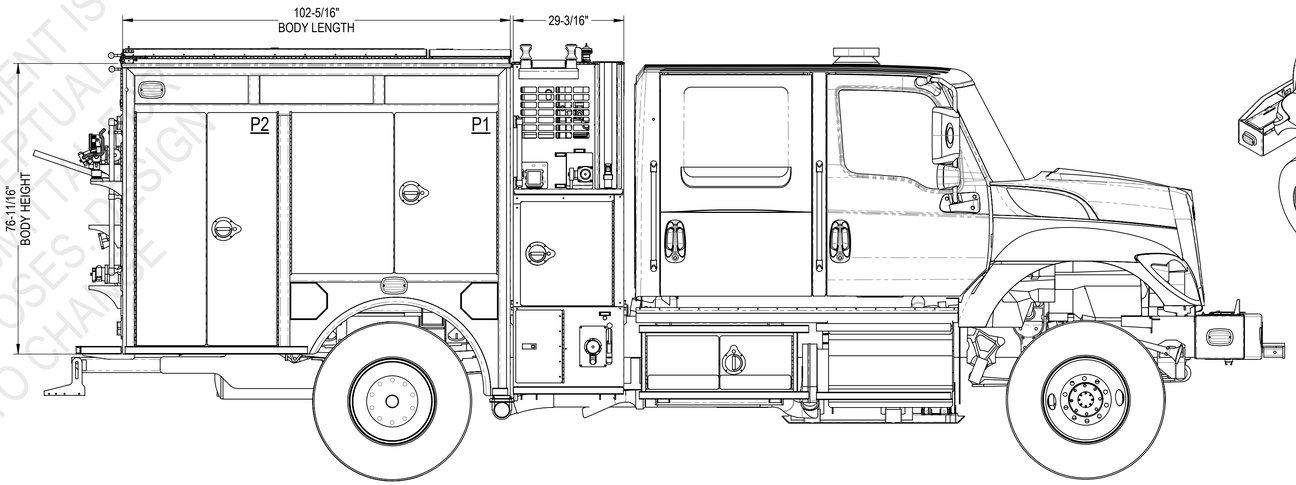

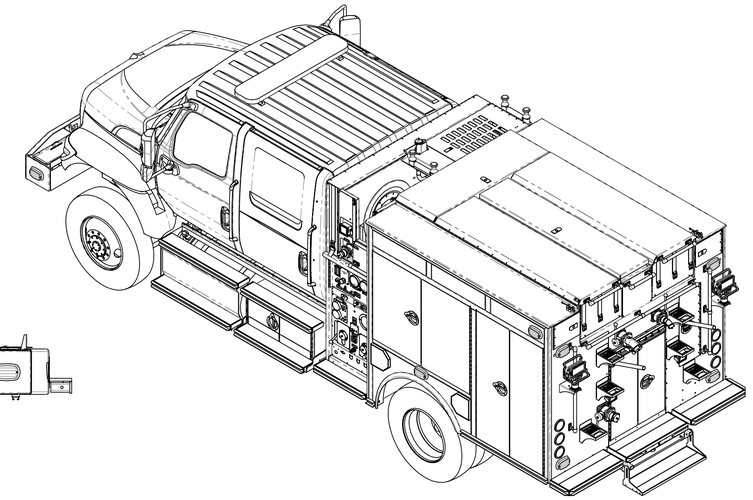

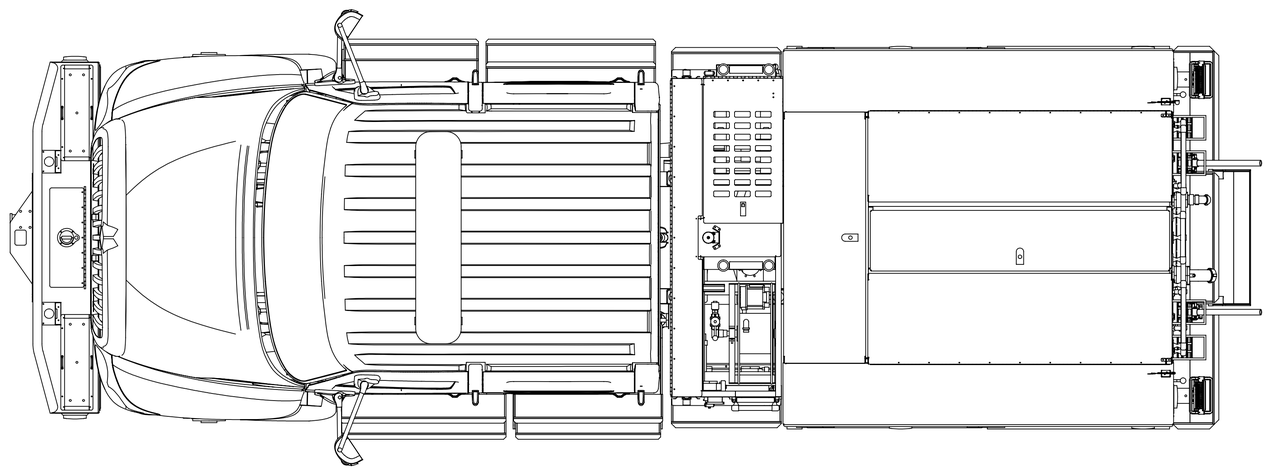

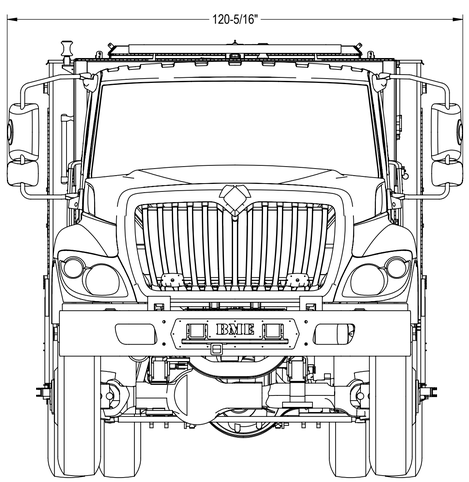

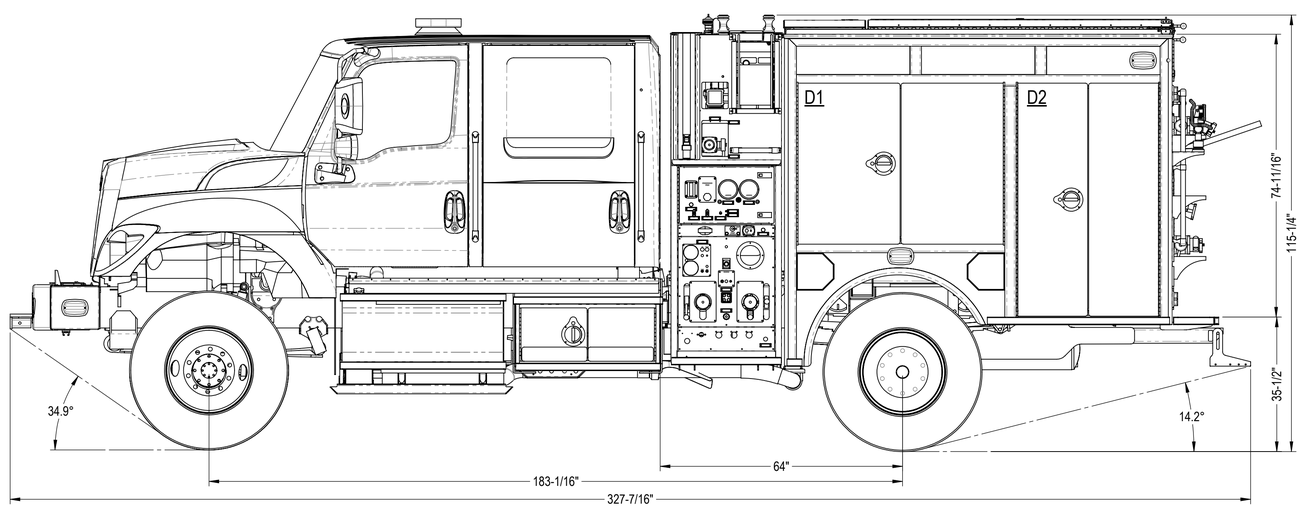

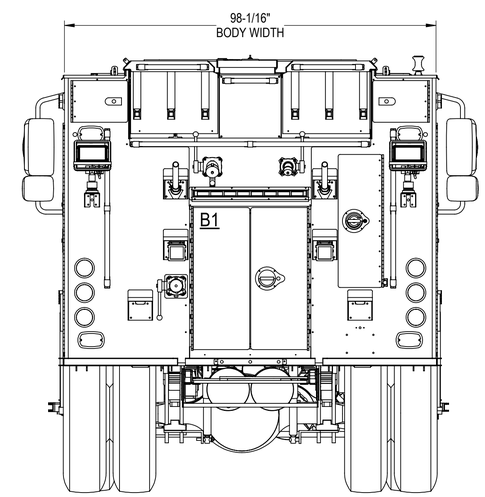

	INITIALS	DATE
MDL'D BY:	A	
REVISIONS		
REVISED BY:	XX	XX-XX-XXXX
REVISED BY:	--	XXXXXX
CHASSIS MFG: INTERNATIONAL		
DRIVE: 4x4		
MODEL: IHV	CAB: CREW	

BOISE MOBILE EQUIPMENT, INC.
5656 W MORRIS HILL, BOISE, ID 83706
WWW.BMEFIRE.COM (800) 445-8342

PROPRIETARY AND CONFIDENTIAL
THIS DRAWING IS THE PROPERTY OF BOISE MOBILE EQUIPMENT, INC. ITS SUBMISSION DOES NOT INCLUDE OR CARRY THE RIGHT TO MAKE, USE, OR SELL WHAT IS ILLUSTRATED WITHOUT THE WRITTEN CONSENT OF BOISE MOBILE EQUIPMENT, INC.

UNLESS OTHERWISE SPECIFIED
DIMENSIONS ARE IN INCHES
TOLERANCES:
FRACTIONAL ± 1/16
ANGULAR: MACH ± 5 BEND ± 1
TWO PLACE DECIMAL ± .020
THREE PLACE DECIMAL ± .005
DO NOT SCALE DRAWING

CUSTOMER NAME: CUSTOMER
TANK INFORMATION:
WATER: 500
FOAM A: 20
FOAM B:
DESCRIPTION: STANDARD MODEL 34
REV: -
Page 5 of 54
SHEET 1 OF 1

BME

Master Software and Services Agreement

CONTRACT NUMBER: 00006209.0

BETWEEN

North Summit Fire District

86 E. Center Street

Coalville, UT 84017

AND

IMAGETREND®

ImageTrend, Inc.

20855 Kensington Blvd.

Lakeville, Minnesota 55044

THIS AGREEMENT is made and entered into on the date last written below, by and between the ImageTrend, Inc., a Minnesota corporation (hereinafter "ImageTrend"), and North Summit Fire District (hereinafter "Client"), together "the Parties."

RECITALS

WHEREAS, Client desires to have services performed by ImageTrend; or

WHEREAS, Client desires to purchase Commercial-Off-The-Shelf Software from ImageTrend; or

WHEREAS, Client desires to purchase Custom Software Development from ImageTrend; and

WHEREAS, ImageTrend possesses technical skill, knowledge, and capability in consulting and designing custom and off-the-shelf software solutions and performing technical software services and Client desires such services.

NOW, THEREFORE, THE PARTIES HEREBY AGREE AS FOLLOWS:

SECTION 1. DEFINITIONS

"Agreement" and "**This Agreement"** means this Master Software and Services Agreement, the Work Orders issued hereunder, all Attachments and Exhibits attached hereto, or any Amendments made in mutually executed hereto.

"Business Day" means a single 8 hour period occurring on a Monday, Tuesday, Wednesday, Thursday or Friday, 9:00am CST to 5:00pm CST, excluding holidays per §14(b) below. Unless specified in a Service Order, ImageTrend personnel will only perform services during Business Days.

"Business Week" means a 5 day period, beginning Monday at 9:00am CST and ending Friday at 5:00pm CST, excluding holidays per below.

"Confidential information" means the proprietary products and trade secrets, including, but not limited to, computer software, code, technical parameters, price lists, methods of pricing, customer lists, designs, software documentations, manuals, models and account tables, and any and all information maintained or developed. Information shall be considered Confidential Information if it is identified in writing as confidential or proprietary, or if disclosed verbally or visually in discussion, upon written notice specifying and describing the nature of the orally disclosed Confidential Information at that time, or within fifteen (15) days of such disclosure.

"Commercial Off The Shelf" or "COTS" means pre-designed software products which are made available for sale by ImageTrend to many customers. COTS is mutually exclusive to Custom Software or Custom IP. MOTS means Modified Off The Shelf, and is a derivative work of ImageTrend COTS Software.

"Custom IP" or "Custom Software" means software products, or other Intellectual Property, which is designed for a specific purpose, for a specific customer or CLIENT.

"Deliverable" means an intangible or tangible product, material, or service produced as a result of a Work Order, and each Deliverable is specified in the corresponding Work Order from which it is produced.

"Disclosing Party" means the party disclosing Confidential Information to the other party, see also Receiving Party.

"Effective Date" means the date upon which the last party has signed and executed this Agreement.

"Fixed Fee" means a fixed amount of compensation due in return for a fixed Deliverable.

"Governmental Entity" shall have the same meaning as "State and local government entities" as defined in the General Services Administration Acquisition Manual (GSAM) at 538.7001, as updated.

"Intellectual Property" means any intellectual property or proprietary rights in any jurisdiction, whether owned or held for use under license, whether registered or unregistered, including such rights in and to: (i) trademarks, trade dress, service marks, certification marks, logos, trade names, brand names, corporate names, assumed names and business names ("Trademarks", which term shall include the items described in clause (viii) below); (ii) patents and any and all divisions, continuations, continuations-in-part, reissues, continuing patent applications, reexaminations or extensions thereof, any counterparts claiming priority therefrom, utility models, patents of importation/confirmation, certificates of invention, certificates of registration and like statutory rights; inventions, invention disclosures, discoveries and improvements, whether patentable or not; (iii) copyrights and works of authorship; (iv) trade secrets (including those trade secrets defined in the Uniform Trade Secrets Act and under corresponding federal, state or foreign statutory or common law), business, technical and know-how information, non-public information, and confidential information and rights to limit the use or disclosure thereof by any Person; (v) mask works; (vi) moral rights, author's rights or rights of publicity; (vii) claims, causes of action and defenses relating to the enforcement of any of the foregoing; (viii) any applications for registration of any of the foregoing, and all renewals or extensions of any of the foregoing, whether now existing or hereafter arising; and (ix) the goodwill associated with each of the foregoing. For the avoidance of doubt, "Intellectual Property Rights" includes any and all of the foregoing related to computer software, data files, Source Code, Object Code, APIs, manuals, documentation, specifications, databases or other materials or information.

"Licensed Information" means any information pertaining to the Software which is owned by IMAGETREND and is licensed to CLIENT. Licensed Information includes such information as input form, user manuals and user documentation, interface format and input/output format, and any other materials pertaining to the Software.

"Local Travel" means travel to a destination in the Twin Cities Metro area, within 30 miles of Lakeville, MN.

"Materials" and "Expenses" means but is not limited to third party software licenses, physical hardware, test devices, or other items, reasonable travel expenses (including but not limited to food, lodging, and transportation), printing, delivery of materials, or any other cost reasonably incurred arising out of this Agreement.

"Master Services Agreement" means this document excluding Work Orders issued from this document.

"Pre-Existing Materials" means code, documentation, frameworks, development accelerators, tool sets or any other materials owned by ImageTrend and not developed as part of the services performed for

Client. It may include, without limitation, Security Framework, Dashboard, ImageTrend Frameworks, Report Writer and any other tools or Intellectual Property made or used by ImageTrend unrelated to this Agreement.

"On-Site Hour" means time an hour worked by ImageTrend personnel on Client premises, or other premises of Client's choosing that are not ImageTrend's corporate offices.

"Statement of Work" means the technical document which outlines a mutually agreed upon specification for particular Custom Development projects and associated costs, payment terms and acceptance procedures. This document requires client acceptance and signature prior to beginning work.

"Support" means technical support for the configuration and functioning of the products, including taking and monitoring defect reports, as defined further below in the Service Level Agreement between ImageTrend and Client.

"Software" means ImageTrend software provided to Client by ImageTrend, specifically software developed and/or written by ImageTrend. Software developed by a third-party which is purchased on behalf of Client is considered Third Party Material.

"Receiving Party" means the party receiving Confidential Information from the Disclosing Party

"The Agreement" means collectively this Master Services Agreement, its Exhibits, all Work Orders issued from this Master Services Agreement, and all Exhibits to Work Orders.

"Third Party Material(s)" means software or other materials owned by a party other than Client or ImageTrend.

"Time and Materials Basis" means charges billable to the Client based upon each hour worked, multiplied by the hourly rate for the work, plus the cost of any Materials necessary (including but not limited to, the cost of third party software licenses, travel and accommodation expenses, or otherwise), or Materials beneficial (conditioned upon mutual assent of the parties), billed on a monthly basis in arrears.

"Work Order" means the document which outlines a mutually agreed upon set of services, products, or Deliverables and associated costs, payment terms, and acceptance procedures.

SECTION 2. TERM OF AGREEMENT

The Term of this Agreement shall be 12 months from the Effective Date of this Agreement ("Initial Term"). Upon expiration of a Term, the Term shall automatically renew under the same terms and conditions for additional subsequent 12 month term ("Renewal Term"), unless terminated under the terms of this Agreement or by otherwise giving the other party no less than 30 days of written notice prior to the last day of the then-current Term.

SECTION 3. WORK ORDERS

CREATION OF WORK ORDERS. The parties may, from time to time, work together to detail the specific engagement scope, pricing, acceptance criteria, and terms of services to be performed and Deliverables to be delivered by ImageTrend. ImageTrend will set forth these details as a Work Order. If the Work Order is for the purchase of COTS Software, the Work Order shall also outline the quantity and SKU of

each product or service as applicable. Should a Work Order contain no term regarding a topic, the terms of this Master Software and Services Agreement shall hold instead.

LIMITATIONS OF WORK ORDERS. Work Orders may include requirements on the Client. Such requirements, when executed as part of a mutual agreed writing, form a material part of this Agreement and of the Work Order where the requirement is presented. Additionally, either party may set forth factual assumptions ("Assumption") in each Work Order. Notwithstanding anything in this Agreement or the Work Order, a Work Order will be rendered void to the extent that ImageTrend is obligated to perform services which are impossible or impracticable. Further, a Work Order will be rendered voidable to the extent that ImageTrend is obligated to perform services materially different than originally set out in that Work Order due to an inaccurate Assumption. The parties will make commercially reasonable efforts to negotiate an alternative or modified Work Order in light of the inaccurate Assumption.

MODIFICATION OF WORK ORDERS. Any modification to the scope or tasks identified within the Work Order that change the work budget by an estimated 10 hours of work or more shall require a new modified written Work Order or written Change Order. ImageTrend shall not work on the new tasks in the modified Work Order until the Client has provided signed written acceptance of the new Work Order. The parties may waive this requirement on a case-by-case basis in writing. Modifications requiring less than an estimated 10 hours of work may be proposed and accepted verbally, with such modifications requiring less than 10 hours of work billed on a Time and Materials basis.

FEE MODEL. The Work Order will contain fee and payment terms. The following fee models are contemplated:

Model Name	Definition
Fixed Fee	ImageTrend shall perform the work outlined in the Work Order for a fixed flat fee, plus Expenses. The Fixed Fee is exclusive of Expenses unless the Work Order outlines the Expenses. The Fixed Fee model may include milestone payments, with such milestone payments outlined in the Work Order.
Time and Materials	ImageTrend shall perform the work outlined in the Work Order on a Time and Materials basis, at the rate(s) specified in the Work Order.

LEGAL EFFECT. Work Orders issued under this Master Services Agreement are incorporated by reference into this Master Services Agreement which collectively is called "the Agreement." Work Orders do not override the terms of this Master Services Agreement unless specifically stated that they do so. Work Orders may contain their own Fee/Payment Schedules and Payment Terms; those terms are binding insofar as they concern the services or Deliverables contemplated by the Work Order. For Work Orders without their own fee and payment terms, the payment terms in the Price Sheet and Work Order Attachment below control.

CUSTOMIZED SOFTWARE DEVELOPMENT. The parties may mutually agree to a Work Order also known as a Statement of Work for the development of new or custom software, also known as "Modified Off The Shelf" or MOTS. All normal requirements of the Work Order shall apply, but additionally the parties must work together to mutually define a Statement of Work which outlines the tasks, and their timelines, to be undertaken as part of the project. Any Customized Software or MOTS Software developed under this Agreement will be Intellectual Property owned by ImageTrend. Should Client

desire ownership of any Intellectual Property developed by ImageTrend, this must be embodied by a separate, mutually executed contract. For clarity, Client shall not and will not own any ImageTrend Intellectual Property under any circumstance under this Agreement. Client may only receive a license thereto as outlined in each Work Order.

SECTION 4. PERFORMANCE OF SERVICES

COMMENCEMENT. ImageTrend shall begin services described in the Work Order subsequent mutual signed execution the Work Order. No services shall begin before mutual signed and written final acceptance of each Work Order.

USE OF KNOW HOW. ImageTrend shall use its know-how, Intellectual Property, talent, skills, and employees to perform the services. Client shall conditionally receive a license to any and all pre-existing ImageTrend Intellectual Property and Know-How used in the creation of Deliverables and delivery of services as outlined below in §6 "Licensing and Intellectual Property" and the Software Licensing Terms Attachment.

MATERIALS. Materials (including, but not limited to, third party software licenses, physical hardware, test devices, or other items and any other Material) that will be used in the development of the Software will be identified by ImageTrend to Client. ImageTrend shall acquire such Materials as the parties mutually agree should be acquired, and it shall be the Client's responsibility to pay for those materials.

ACCEPTANCE OF SERVICES AND DELIVERABLES. ImageTrend shall deliver completed Deliverables and services to Client for acceptance. Each Work Order must detail the acceptance criteria for each Deliverable or service contained within that Work Order. If a Deliverable or services acceptance criteria is measurable objectively, it shall be complete upon satisfaction of that objective measurement without regard to either party's satisfaction with the Deliverable. If 1) a Deliverable's acceptance criteria is based on Client's satisfaction with the Deliverable, or 2) no acceptance criteria is detailed, then the following default clause shall apply:

After delivery of the Deliverable or performance of the service, Client shall have no more than 15 days to: 1) accept the deliverable or service, or 2) reject the deliverable or service by providing a written rejection that reasonably sets forth the reason for the rejection and the changes required to gain Client's acceptance, or 3) provide a written request for a 15 additional day extension to review the Deliverable or service; ImageTrend shall not unreasonably withhold approval of such 15 day extension. If Client does not provide an acceptance within the above time frame inclusive of extensions, the Deliverable or service will be deemed accepted. After delivery of the fourth revision of the service or Deliverable, the service or Deliverable shall be deemed accepted by Client.

SECTION 5. FEES, INVOICING, AND PAYMENT TERMS

PROMPT PAYMENT ACTS. <u>IF CLIENT IS A GOVERNMENTAL ENTITY, THE FOLLOWING PARAGRAPH APPLIES:</u> To the degree any term in this Section 5, or any payment related term in any Work Order,

conflicts with the governing prompt payment act or similar procurement act which unambiguously limits client's ability to agree or comply with any term in this section 5 or in any payment related term in any work order ("The PPA"), the term in the PPA will instead control. For clarity, unless there is an unambiguous conflict between the terms of this Section 5 or in any Work Order, the PPA shall not control and this Agreement shall still control.

FEES. Client shall owe to ImageTrend such fees as set forth in each mutually executed Work Order.

SCHEDULING NON-LOCAL TRAVEL. For air travel Client may, and is strongly advised to, schedule travel no less than 3 weeks in advance of the first on-site date by written request; ImageTrend reserves the right to approve or deny travel requests on a per-request basis. Client may also request travel by writing with 3 weeks or less advance notice; ImageTrend reserves the right to approve or deny such travel requests, and to invoice costs to Client due to scheduling changes ImageTrend must make to accommodate such a request if approved.

CANCELLATION, RESCHEDULE, OR DELAY. Client will provide to ImageTrend (10) ten business days prior written notice of Client's intent to delay, reschedule, or cancel ("Staffing Change") any service in a Work Order which requires an ImageTrend employee to perform work at a specific location or at a specific time (e.g. face-to-face meetings, on-site visits, after hours on-call status). If Client fails to provide such notice, Client shall reimburse ImageTrend for loss caused by the Staffing Change. ImageTrend shall use commercially reasonable efforts to mitigate any losses that would be incurred by a Staffing Change and due to ImageTrend by Client.

INVOICING. Unless otherwise specified in a Work Order, invoices must be paid on Net 30 terms. Any objection to an invoice must be made in writing. Client may request up to an additional 15 days to review Deliverables associated with an invoice, approval to which ImageTrend shall not unreasonably withhold. If Client does not object to an invoice, or request an extension to review Deliverables, within 15 days after receipt of the invoice then the invoice is deemed accepted and any right to object to the invoice is waived. Payment shall be made by check or by ACH transfer to ImageTrend.

REMEDIES FOR NON-PAYMENT. Should Client fail to pay per the terms of this Agreement and this Section 5, ImageTrend may 1) suspend services under all Work Orders until such payment is made in full, and/or 2) charge a late fee at the lesser of 1.5% or the maximum allowed by law, and/or 3) invoice Client for the costs of collection including reasonable attorney's fees.

TRAVEL COSTS. Should Client desire ImageTrend to send personnel to a location of Client's choosing in the continental United States, Client may pay $1,800 per ImageTrend trainer per trip and a further $1,750 per trainer per day spent at Client's chosen location. Travel outside of the continental US will be quoted by ImageTrend upon request. Travel may only be scheduled for a maximum of one business week of Monday through Friday per trip; however Client may book consecutive trips. Non-local travel scheduling which runs from one business week into a subsequent business week(s) (e.g. start date on Friday at 8:00am, end date Wednesday at 5:00pm, "Overlapped Weekend") will result in ImageTrend invoicing Client an additional trip for each Overlapped Weekend. ImageTrend staff will work 8 hours

each day, except on the first and last day of each trip ImageTrend may reserve up to 2 hours of the Business Day for travel time.

TIME AND MATERIALS RATE. Unless otherwise specified in a Work Order, ImageTrend's Time and Materials rate is $225.00 per hour.

PRICE ESCALATION. ImageTrend reserves the right to escalate the prices contained herein, and any recurring fee, by no more than 5 % of the then current price for each anniversary of the Effective Date beginning on 2/13/2024. ImageTrend further reserves the right to escalate travel prices once per year upon written notice to Client. Such travel price increases will only affect future travel prices and will not change the price or amount due to ImageTrend for previously rendered travel.

SECTION 6. DATA AND INTELLECTUAL PROPERTY

CLIENT DATA. All Client data provided to ImageTrend remains at all times the property of the Client unless otherwise specified by a Work Order. ImageTrend will not to use or make available any personally identifiable information or patient health information other than for performing the services outlined in a Work Order, and for use in an aggregated manner to monitor, operate, train artificial intelligence, and conduct statistical analyses relevant to the application's proper functioning, maintenance, optimization, or improvement. ImageTrend will not in any way transfer to any third party any Confidential Information of Client.

DE-IDENTIFICATION. ImageTrend may create a de-identified data set of Client's data ("the De-identified Data Set") and ImageTrend may, in ImageTrend's discretion, transform, analyze, distribute and redistribute, create derivative works of, license, make available to 3rd party researchers, or otherwise use the De-identified Data Set except as limited by: 1) this Agreement, 2) applicable law and regulation, e.g. State and Local data privacy law and HIPAA/HITECH, 3) notwithstanding any of the prior, ImageTrend shall create the De-identified Data Set in accordance with the then current HIPAA Safe Harbor Rule at 45 CFR § 164.514(2)(i) by removing the 18 listed data elements, and any additional data element designated as 'Personal Information' by State and Local data breach law (or equivalent laws). ImageTrend shall ensure its methods for creating the De-identified Data Set comport with industry best practices and guidance such as NISTIR 8053 'De-Identification of Personal Information' (available at http://dx.doi.org/10.6028/NIST.IR.8053). ImageTrend shall use reasonable administrative, technical, and physical safeguards to protect and prevent unauthorized disclosure of the De-identified Data Set. ImageTrend shall not attempt to re-identify any de-identified records.

GRANT OF LICENSE TO IMAGETREND'S PRE-EXISTING IP AND OWNERSHIP OF NEW IP. All Intellectual Property Rights connected to the ImageTrend pre-existing materials such as architectural structure, modules, processes, and Know-How that may be used in Deliverables ("Pre-existing IP"), shall remain owned by ImageTrend. ImageTrend agrees to grant to Client a royalty-free, worldwide, transferable, non-exclusive, use license for these architectural structures, modules, and processes that may be used solely in conjunction with the Deliverables and services performed under Work Orders and in accordance with the license selected below in the Software Licensing terms Attachment, conditioned upon full payment of the Work Order from which the Deliverable containing Pre-Existing IP originates. This license may not be transferred, and Client may not sublicense, use, reproduce, distribute or prepare derivative works of ImageTrend's Pre-Existing IP except to the extent strictly necessary to fulfill the purpose of a Work Order. New Deliverables utilizing the same Pre-Existing IP may require another

license for that new Deliverable, in ImageTrend's discretion. New Custom Intellectual Property authored by the parties in the course of performing a Work Order shall be owned by the party that authored the Intellectual Property and in the case of derivative works, it shall be owned by the party who owns the work from which the derivative is made, or as otherwise set forth in the Work Order. In the case of ImageTrend Software products licensed per the Software Licensing Terms Attachment below, or "Modified Off The Shelf Software" as defined above, ImageTrend shall own all Intellectual Property related to or arising out of any Work Order. A Work Order may specify who owns the intellectual property embodied in a Deliverable; however, absent such terms in the Work Order, the terms of this Agreement shall control. Any right not hereby granted is reserved.

SECTION 7. CONFIDENTIALITY

CONFIDENTIALITY ACKNOWLEDGEMENT. Each party hereby acknowledges and agrees that the other Party's Data, potential clients or customers, client or customer lists, business plans, pricing structures, software and database designs, and any other information a Party has marked as Confidential, constitute Confidential Information. Each party agrees to treat (and take precautions to ensure that its authorized personnel treat) Confidential Information as confidential in accordance with the confidentiality requirements and conditions set forth below. Orally transmitted information shall not be Confidential Information unless specified as such in a writing transmitted from the Disclosing party to the Receiving party within 15 days of the oral transmission, with such writing providing a reasonable description and scope of the Confidential Information transmitted.

CONFIDENTIALITY OBLIGATIONS. Each party agrees to keep confidential all confidential information disclosed to it by the other party in accordance herewith, and to protect the confidentiality thereof in the same manner it protects the confidentiality of similar information and data of its own (at all times exercising at least a reasonable degree of care in the protection of confidential information); provided, however, that the provisions of this §7 shall not apply to information which: (i) is in the public domain; (ii) has been acquired by a Party by means other than the disclosure of the information by the Disclosing Party; (iii) is duly obtained by a Party directly or indirectly from a third party who has independently developed the information and is entitled to disclose the information to the Party, and such disclosure does not directly or indirectly violate the confidentiality obligation of such third party; or (iv) becomes known publicly, without fault on the part of a Party, subsequent to the receipt of the information by Party.

SURVIVAL. This §7 shall survive the termination of this Agreement or of any license granted under this Agreement.

SECTION 8. WARRANTIES

NO CONFLICTS OF INTEREST. ImageTrend does not have any express or implied obligation to a third party which in any way conflicts with any of ImageTrend's obligations under this Agreement.

SERVICES. All services and will be provided in a professional and workmanlike manner in accordance with applicable industry standards and will comply with all applicable laws. All Deliverables will substantially conform to the agreed-upon specifications set forth in the applicable Work Order or as otherwise set forth in this Agreement.

EXCEPT AS SPECIFICALLY SET FORTH IN THIS AGREEMENT ABOVE, THE SERVICES IMAGETREND PROVIDES TO CLIENT ARE PROVIDED WITHOUT ADDITIONAL WARRANTY OF ANY KIND, EITHER EXPRESSED OR IMPLIED, INCLUDING BUT NOT LIMITED TO THE IMPLIED WARRANTIES OF MERCHANTABILITY AND FITNESS FOR A PARTICULAR PURPOSE AND ANY ORAL OR WRITTEN REPRESENTATIONS, PROPOSALS, OR STATEMENTS MADE PRIOR TO THIS AGREEMENT. IMAGETREND HEREBY EXPRESSLY DISCLAIM, AND CLIENT HEREBY WAIVES, ANY REPRESENTATION OR WARRANTY OF ANY KIND WITH RESPECT TO THE SERVICES, INCLUDING WITHOUT LIMITATION, THE IMPLIED WARRANTIES OF MERCHANTABILITY, NON-INFRINGEMENT AND FITNESS FOR A PARTICULAR PURPOSE. THE REMEDIES PROVIDED IN THIS AGREEMENT ARE CLIENT'S SOLE AND EXCLUSIVE REMEDIES.

SECTION 9. LIMITATION OF LIABILITY

EACH PARTY SHALL NOT, UNDER ANY CIRCUMSTANCES, BE LIABLE TO THE OTHER PARTY FOR CONSEQUENTIAL, INDIRECT, INCIDENTAL, SPECIAL, PUNITIVE, OR EXEMPLARY DAMAGES OR LOSSES ARISING OUT OF OR RELATED TO THIS AGREEMENT, EVEN IF THAT PARTY IS ADVISED OF THE LIKELIHOOD OF SUCH DAMAGES OCCURING. EACH PARTY'S CUMULATIVE LIABILITY ARISING OUT OF OR IN ANY MANNER RELATED TO THIS SHALL BE LIMITED TO THE AMOUNT OF THE FEES DUE UNDER THIS AGREEMENT.

SECTION 10. DISPUTE RESOLUTION

DUTY TO NEGOTIATE IN GOOD FAITH PRIOR TO FORMAL DISPUTES. IF CLIENT IS A GOVERNMENTAL ENTITY, THE FOLLOWING 2 PARAGRAPHS APPLY:

The parties shall attempt in good faith to resolve any dispute arising out of or relating to this agreement promptly by negotiation between executives who have authority to settle the controversy and who are at a higher level of management than the persons with direct responsibility for administration of this agreement. Any party may give the other party written notice of any dispute not resolved in the normal course of business. Within 15 days after delivery of the notice, the receiving party shall submit to the other a written response. The notice and response shall include with reasonable particularity (a) a statement of each party's position and a summary of arguments supporting that position, and (b) the name and title of the executive who will represent that party and of any other person who will accompany the executive. Within 30 days after delivery of the notice, the executives of both parties shall meet at a mutually acceptable time and place, or by teleconference.

All offers, promises, conduct and statements, whether oral or written, made in the course of the negotiation by any of the parties, their agents, employees, experts and attorneys are confidential, privileged and inadmissible for any purpose, including impeachment, in arbitration or other proceeding involving the parties, provided that evidence that is otherwise admissible or discoverable shall not be rendered inadmissible or non-discoverable as a result of its use in the negotiation.

ARBITRATION. If Client is NOT a Governmental Entity the following paragraph applies:

Any dispute between ImageTrend and Client under this Agreement shall be resolved by arbitration by an arbitrator selected under the rules of the American Arbitration Association in the State of the defending party and the arbitration shall be conducted in that same location under the rules of said Association. If an arbitrator cannot be agreed upon by the parties, ImageTrend and Client shall each choose an arbitrator, and those two chosen arbitrators shall choose a third arbitrator, that third arbitrator shall preside over any dispute. ImageTrend and Client shall each be entitled to present evidence and argument to the arbitrator. The arbitrator shall have the right only to interpret and apply the provisions

of this Agreement and may not change any of its provisions. The arbitrator shall permit reasonable pre-hearing discovery of facts, to the extent necessary to establish a claim or a defense to a claim, subject to supervision by the arbitrator. The arbitrator shall endeavor to keep costs as low as possible while still allowing for the just and fair disposition of the dispute. The determination of the arbitrator shall be conclusive, final and binding upon the parties and judgment upon the same may be entered in any court having jurisdiction thereof. The arbitrator shall give written notice to the parties stating his determination, and shall furnish to each party a signed copy of such determination. ImageTrend and Client shall equally share the cost of the arbitrator(s) fees. The arbitrator may award reasonable costs and expenses, including reasonable attorney fees, to the prevailing party.

SECTION 11. NON-EXCLUSIVITY

This Agreement does not establish any exclusivity of service, contract, customer relationship, or otherwise between the parties.

SECTION 12. AMENDMENTS

This Agreement may only be modified by a mutually executed writing including but not limited to Work Orders, signed by a person having authority to sign.

SECTION 13. TERMINATION

Either Party may terminate this Agreement upon giving the other Party thirty days (30) days' prior written notice to the other Party in addition to any other remedy or right contained in this Agreement. This right of termination is additive to other rights of termination identified above in this Agreement and does not preclude the exercise of those other rights.

SECTION 14. INDEMNIFICATION

IMAGETREND INDEMNITY. ImageTrend shall defend and indemnify Client from and against third party claims, actions, suits, demands, damages, obligations, losses, settlements, judgments, costs, and expenses ("Claims"), which arise out of any negligent act or omission, or willful misconduct of ImageTrend. Client shall promptly notify ImageTrend for any actual or prospective Claim for which indemnification is sought. In the event that any third-party Claim is made and Client invokes this clause, ImageTrend shall have the right and option to undertake and control such defense of such action with counsel of ImageTrend's choice with control to settle any such Claim. ImageTrend shall have no obligation to defend or indemnify Client from Claims arising out of Client's negligent or intentional wrongful acts or omissions. Because ImageTrend must provide its own insurers with notice of a claim within 60 days of actual knowledge of a Claim, Client accordingly must provide ImageTrend written notice no more than 60 days after Client has actual knowledge of a Claim else ImageTrend shall have no obligation to indemnify Client.

CLIENT INDEMNITY. IF CLIENT IS A GOVERNMENTAL ENTITY THE FOLLOWING PARAGRAPH DOES NOT APPLY. Client shall defend and indemnify ImageTrend from and against third party claims, actions, suits, demands, damages, obligations, losses, settlements, judgments, costs, and expenses ("Claims"), which arise out of any negligent act or omission, or willful misconduct of Client. ImageTrend shall promptly notify Client for any actual or prospective Claim for which indemnification is sought. In the event that any third-party Claim is made and Client invokes this clause, Client shall have the right and option to undertake and control such defense of such action with counsel of Client's choice with control to settle

any such Claim. Client shall have no obligation to defend or indemnify ImageTrend from Claims arising out of Client's negligent or intentional wrongful acts or omissions. ImageTrend accordingly must provide Client written notice no more than 60 days after ImageTrend has actual knowledge of a Claim else Client shall have no obligation to indemnify Client.

SECTION 15. COOPERATIVE USE

Public and nonprofit agencies that have entered into a Cooperative Purchasing Agreement with the CLIENT are eligible to participate in any subsequent Agreement. The parties agree that these lists are subject to change. Any such usage by other municipalities and government agencies must be in accord with the ordinance, charter, rules and regulations of the respective political entity and with applicable State and Federal Laws.

SECTION 16. GENERAL TERMS

a. **INSURANCE REQUIREMENTS.** ImageTrend will provide to Client a Certificate of Insurance upon request.

b. **ELECTRONIC SIGNATURES.** The parties agree to conduct transactions primarily via electronic means. Accordingly, each party accepts electronic signatures and Deliverables as equivalent to physical versions of the same.

c. **BUSINESS DAYS AND HOLIDAYS.** The parties agree a business day is 8 hours long, and excludes Saturdays, Sundays, and days reasonably considered a holiday by either party per each party's written policies. Unless otherwise specified in a Work Order, ImageTrend shall perform services only during business days, from 9:00am CST to 5:00pm CST.

d. **COUNTERPARTS.** This Agreement may be executed in counterpart originals, duly signed by both parties, each of which will be deemed an original but all of which, together, will constitute one and the same Agreement. Any terms not present in all counterpart copies are severed and void. Electronic counterparts are equally as valid as original counterparts.

e. **FORCE MAJEURE.** Neither party will be liable for delays nor for non-performance due to an unforeseeable event, external to this Agreement and the parties, where the occurrence of the event beyond the non-performing or delayed party's reasonable control ("Force Majeure Events.") This clause shall not apply to costs due to ImageTrend to reimburse cancellation, reschedule, or modification of travel arrangements per §5 above. Force Majeure Events may include, but are not limited to: war, terrorism or threats of terrorism, civil disorder, labor strikes, fire, disease, medical epidemics or outbreaks, events which curtail necessary transportation facilities (e.g. airports), or other unforeseeable events where the occurrence of the event is beyond the non-performing or delayed party's control.

f. **REASONABLE COOPERATION.** Client will reasonably cooperate with ImageTrend to the extent reasonably necessary to enable ImageTrend to perform the Services contemplated in each Work Order. Accordingly, Client will provide access, information or other materials in a fashion timely

to the schedule of each Work Order. ImageTrend shall have no liability to Client for delays arising out the actions or non-actions of Client.

g. **NON ASSIGNABILITY.** A party shall not assign this Agreement or its rights hereunder without the prior written consent of the other party.

h. **JURISDICTION AND VENUE.** The parties agree that the law governing this Agreement shall be that of the State of Minnesota without regard to its conflict of laws principles. **IF CLIENT IS A GOVERNMENTAL ENTITY** the law governing this Agreement shall be that of the Client's jurisdiction without regard to its conflict of laws principles.

i. **ENTIRE AGREEMENT.** This Agreement constitutes the entire Agreement between the parties, with respect to this subject matter, including, but not limited to the services, goods, products, and Software provided by ImageTrend for Client and the compensation provided by Client for said provision of such services therefore, and supersedes all previous proposals, both oral and written, negotiations, representations, writings and all other communications between the parties. This Agreement may not be released, discharged, or modified except by an instrument in writing signed by the parties.

j. **SEVERABILITY.** If any provision of this Agreement is determined by a court of competent jurisdiction to be invalid or unenforceable, such determination shall not affect the validity or enforceability of any other part or provision of this Agreement.

k. **WAIVER.** No waiver by either party of any of any provision hereof shall constitute a waiver of any other term of this Agreement nor shall it preclude either party from enforcing its rights.

l. **NONAPPROPRIATION. IF CLIENT IS A GOVERNMENTAL ENTITY THE FOLLOWING PARAGRAPH APPLIES.** The continuation of this Agreement is contingent upon the appropriation of funds by the legislature or other sources as applicable to fulfill the requirements of the Agreement. If the insufficient monies are appropriated to provide for the continuation of the Contract, or if such appropriation is reduced by the veto of the Governor or by any means provided in the applicable appropriation laws or regulations for any lawful purpose, and the effect of such reduction is to provide insufficient monies for the continuation of this Agreement or any Work Order hereto, the Agreement or applicable Work Order(s) shall terminate on the date of the beginning of the first fiscal year for which funds have not been appropriated. ImageTrend shall be entitled to payment for deliverables in progress, to the extent work has been performed pursuant to this Agreement or any Work Order hereto; obligations that have been incurred that extend beyond the date of termination; and reasonable contract close-out costs.

m. **ATTORNEYS' FEES.** In any action between the parties to enforce any of the terms of this Agreement, the prevailing party shall be entitled to recover reasonable expenses, including reasonable attorneys' fees.

n. **INDEPENDENT CONTRACTORS.** It is the express intention of Client and ImageTrend that ImageTrend and its employees and agents will perform the services hereunder as independent contractors to Client. Nothing in this Agreement shall in any way be construed to constitute ImageTrend or its employees or agents as an agent, employee or representative of Client. Without limiting the generality of the foregoing, ImageTrend is not authorized to bind Client to any liability or obligation or to represent ImageTrend has any such authority. Client and ImageTrend agree that neither ImageTrend employees nor its agents will receive Client - sponsored benefits from Client.

o. **NOTICES.** Any notice required to be given by either party to the other shall be deemed given if in writing on the date actually delivered (including electronic methods such as e-mail), or if deposited in the United States mail in registered or certified form with return receipt requested, postage prepaid, on the postmarked date and addressed to the notified party at the address set forth below, or to such other address as a party may designate from time to time by means of notice given hereunder to the other party.

p. **PUBLIC INFORMATION**: ImageTrend agrees that this Contract, related purchase orders, related pricing documents, and invoices will be public documents and may be available for public and private distribution in accordance with the State of Utah Government Records Access and Management Act (GRAMA), Utah Code Title 63G, Chapter 2, as amended. ImageTrend gives Client express permission to make copies of this Contract, related sales orders, related pricing documents, and invoices in accordance with GRAMA. Except for sections identified in writing by ImageTrend and expressly approved by Client, ImagetREnd also agrees that the Client's Proposal to the Solicitation will be a public document, and copies may be given to the public as permitted under GRAMA. Client is not obligated to inform ImageTrend of any GRAMA requests for disclosure of this Contract, related purchase orders, related pricing documents, or invoices.

q. **GOVERNMENTAL IMMUNITY**: Client is a body corporate and politic of the State of Utah, subject to the Governmental Immunity Act of Utah (the "Act"), Utah Code §§ 63G-7-101, *et. seq*., as amended. The Parties agree that Client shall only be liable within the parameters of the Governmental Immunity Act. Nothing contained in this Contract shall be construed in any way, to modify the limits of liability set forth in that Act or the basis for liability as established in the Act.

If to Client:
North Summit Fire District
Attn: Tyler Rowser
86 E. Center Street
Coalville, UT 84017

If to ImageTrend:
ImageTrend, Inc.
Attn: Mike McBrady
20855 Kensington Boulevard
Lakeville, MN 55044

IN WITNESS WHEREOF: the undersigned parties, each having authority to bind their respective organizations, hereby agree

Client	**ImageTrend**
Signature:	Signature:
Print Name:	Print Name:
Title:	Title:
Date:	Date:

SOFTWARE LICENSING TERMS ATTACHMENT

To the degree any Work Order involves licensing ImageTrend Software, the following terms shall apply:

"ImageTrend Elite Data Marts" means the relational database(s) that contain an enhanced and simplified reporting-ready format of the transactional data collected within ImageTrend Elite. The Elite Data Marts are available for use with the ImageTrend Elite Reporting Tools.

"ImageTrend Elite Reporting Tools" means the Transactional Report Writer, Visual Informatics, Analytical Chart Reporting Tool and Analytical Tabular Reporting Tool in the Software that are based on a set of Elite Data Marts.

"Incident(s)" means an instance where the Client sends a vehicle or emergency responder to a situation requiring emergency response, as measured by the number of incident reports within ImageTrend Software systems.

"Licensed Information" means other Deliverables provided to Client by ImageTrend relating to the operation or design of the Software, or other Deliverables provided to Client by ImageTrend which are common to ImageTrend (e.g. such Deliverables are not unique to Client). A copy of the software specification Licensed Information is available within the Software labeled as "ImageTrend University."

"The Software" means the sum of all software licenses granted by this Agreement or Work Order hereto as provided in Section 1 below.

SECTION 1. GRANT OF LICENSE TO SOFTWARE.

Each Work Order for the sale of Software Licenses shall outline which of the below licenses are being granted by the Work Order. The license selection will be evidenced by the title of each SKU in the Work Order, e.g. "Elite EMS SaaS" shall be licensed under the Software as a Service License below. If the license is not apparent by the name of the SKU, then the license shall default to Software as a Service. ImageTrend may discontinue or replace a license in this table by providing Client reasonable written notice of the change. Replacing this table shall not have the effect of revoking previously agreed licenses, rather, ImageTrend's right to replace this table shall apply to only future Work Orders.

Name of License	Terms of License
Software as a Service License (SaaS) or Integration as a Service (IaaS) ("SaaS")	ImageTrend hereby grants Client a non-exclusive, non-transferable license to use the ImageTrend Software product(s) listed in the Work Order for such time as listed in said Work Order. During the term of the Work Order, the Client shall have access to the Software, which will be installed on servers at the ImageTrend hosting facility and subject to the Service Level Agreement attached. All copies of the Software and/or Licensed Information in any form provided by ImageTrend to Client hereunder are the sole property of ImageTrend and/or its suppliers, and that Client shall not have any right, title, or interest to any such Software

	and/or Licensed Information or copies thereof except as provided in this Agreement.
ImageTrend Hosted License ("License")	ImageTrend will grant Client a non-exclusive, non-transferable, perpetual use license without rights of resale or sublicensing, to the ImageTrend Software product(s) listed in the Work Order. Client shall have access to the Software, which will be installed on servers at the ImageTrend hosting facility and subject to the Service Level Agreement attached. All copies of the Software and/or Licensed Information in any form provided by ImageTrend to Client hereunder are the sole property of ImageTrend and/or its suppliers, and that Client shall not have any right, title, or interest to any such Software and/or Licensed Information or copies thereof except as provided in this Agreement.
Client Hosted License ("On Premise License")	ImageTrend will grant Client a non-exclusive, non-transferable, perpetual use license without rights of resale or sublicensing, to the ImageTrend Software product(s) listed in the Work Order. Client shall have access to the Software, which will be installed on servers at the Client hosting facility and subject to the attached Service Level Agreement. All copies of the Software and/or Licensed Information in any form provided by ImageTrend to Client hereunder are the sole property of ImageTrend and/or its suppliers, and that Client shall not have any right, title, or interest to any such Software and/or Licensed Information or copies thereof except as provided in this Agreement. Initial set up will require direct access to Client servers by ImageTrend personnel. However, after the installation is complete, management of non- ImageTrend software, operating systems, ancillary systems and the responsibility for keeping non- ImageTrend software updated will be the sole responsibility of Client. ImageTrend disclaims any and all liability arising out of out-of-date or otherwise insufficiently maintained non- ImageTrend software or hosting environment. ImageTrend has no duty to maintain the Client's hosted environment's cybersecurity. Client agrees to ensure that ImageTrend will have sufficient server access to fulfill ImageTrend's duties hereunder. Maintenance of Client Hardware, physical environment, storage, processing, patching, operating system maintenance, network device maintenance, Client 3rd party licenses (as outlined below), or any other task which is required to maintain the Client application hosting environment and is not directly arising out of a requirement of or defect to the ImageTrend application(s) are the sole responsibility of Client. It will not be ImageTrend's responsibility to maintain or resolve problems with Client's hosted environment. ImageTrend's sole responsibility shall be to provide application support for ImageTrend developed applications. Tasks which are ultimately discovered to be maintenance of the Client Hosting environment may be charged to Client at ImageTrend's out-of-scope rate of $225.00.

SECTION 2. PROTECTION OF SOFTWARE AND LICENSED INFORMATION

Client agrees to respect and not to, nor permit any third-party to, remove, obliterate, or cancel from view any copyright, trademark, confidentiality or other proprietary notice, mark, or legend appearing on any of the Software or Licensed Information, and to reproduce and include the same on each authorized copy of the Software and Licensed Information.

Client shall not nor shall Client permit any third-party under Client's control to, copy, reverse engineer, or duplicate the Software or any part thereof except for the purposes of system backup, testing, maintenance, or recovery. Client may duplicate the Licensed Information only for internal training, provided that all the names, trademark rights, product names, copyright statement, and other proprietary right statements of ImageTrend are reserved. ImageTrend reserves all rights which are not expressly granted to Client in this Agreement.

Client shall not, nor shall Client permit any third-party to, modify, reverse engineer, disassemble, or decompile the Software, or any portion thereof, and shall not use the software or portion thereof for purposes other than as intended and provided for in this Agreement.

SECTION 3. IMAGETREND ELITE DATA MARTS NON-EXCLUSIVE USE LICENSE.

In accordance with the terms and conditions hereof, ImageTrend hereby grants the use of the ImageTrend Elite Data Marts only via ImageTrend Elite Reporting Tools, unless an "Elite Data Mart License" is included and detailed in a Work Order. Absent that license, this Agreement does not give the Customer the rights to access and query the ImageTrend Elite Data Marts directly using SQL query tools, reporting tools, ETL tools, or any other tools or mechanisms. Direct access to ImageTrend Elite Data Marts is only available via the aforementioned separately-priced product and service offering from ImageTrend.

SECTION 4. INSTALLATION, INTRODUCTORY TRAINING AND DEBUGGING.

IMPLEMENTATION. ImageTrend shall provide Client with start-up services such as the installation and introductory training relating to the Software, and, if necessary, initial debugging services known as "Implementation". During Implementation, Client must make available sufficient time and resources as is necessary to accomplish the milestones and tasks per the party's project plans (as applicable), typically between 4 and 15 hours a week. Depending on Client's objectives, Client may need to allocate more time or resources to achieve Client's desired timelines.

TRAIN THE TRAINER. ImageTrend may provide "Train-the-trainer" training for administrators as detailed in each Work Order. Additionally, online training videos and user guides in electronic format will be made available via ImageTrend University.

INSTRUCTIONS. ImageTrend will provide installation instructions and assistance for installation of the Software on the Servers appropriate to the License selection in the Work Order per the table above at (e.g. Client Hosted on premise license) as detailed in Service Level Attachment, below.

SOFTWARE SUPPORT. ImageTrend shall provide Software Support as detailed in the Service Level Attachment, below.

TRAINING USAGE AND EXPIRATION. The training line items and quantities as detailed in price table attached must be delivered within 2 years of the Effective Date. It shall be Client's responsibility to request the training session(s). Training not used within the 2 year cut-off shall expire and no refund or credit will be payable to Client.

SECTION 5. SOFTWARE WARRANTIES.

PERFORMANCE WARRANTY. ImageTrend warrants that the Software will conform to the specifications as set forth in the Licensed Information. However, this warranty shall be revoked in the event that any person other than ImageTrend and its agents make any unauthorized modification or change to the Software in any manner outside of the configuration available within the Software's built-in functionality. This warranty does not apply to data extracted from the system.

OWNERSHIP WARRANTY. ImageTrend represents that it is the owner of the entire right, title, and interests in and to the Software, and that it has the sole right to grant licenses thereunder, and that it has not knowingly granted licenses thereunder to any other entity that would restrict rights granted hereunder to Client.

LIMITATIONS ON WARRANTY. All of ImageTrend's obligations under this Section shall be contingent on Client's use of the Software in accordance with this Agreement and in accordance with ImageTrend's instructions as provided by ImageTrend in the Licensed Information, and as such instructions may be amended, supplemented, or modified by ImageTrend from time to time. ImageTrend shall have no warranty obligations with respect to usage which does not conform with ImageTrend's instructions as provided by ImageTrend in the Licensed Information. ImageTrend shall have no warranty obligations with respect to any failures of the Software which are the result of accident, abuse, misapplication, extreme power surge or extreme electromagnetic field of a Client device. In addition to any other limitation on warranty or liability; Client's sole remedy for breach of warranty related to or arising out of the Software, or a defect with the Software, shall be at Client's option 1) repair of the Software or defect, 2) termination of this Agreement for convenience as outlined elsewhere in this Agreement.

THE EXPRESS WARRANTIES PROVIDED HEREIN ARE THE ONLY WARRANTIES MADE BY ImageTrend WITH RESPECT TO THE SOFTWARE AND SUPERSEDE ALL OTHER EXPRESS OR IMPLIED WARRANTIES, INCLUDING, BUT NOT LIMITED TO, ANY WARRANTIES OF MERCHANTABILITY AND WARRANTIES FOR ANY SPECIAL PURPOSE.

SECTION 6. MAINTENANCE.

ImageTrend shall provide scheduled updates and new releases for the Software, as well as defect correction as needed per the Service Level Agreement, attached for so long as Client has contracted for support (as indicated by a recurring fee containing the product name and word 'Support'). Specific out-of-scope system enhancement requests are excluded from support. Should Client desire specific source-code level modifications to the system, Client may submit a request to ImageTrend's UserVoice page at https://ImageTrend.uservoice.com/.

SECTION 7. RETURN OF DATA.

Upon termination of this Agreement for any reason, Client may request ImageTrend provide to Client a

copy of Client's data. ImageTrend will produce this data by first using relevant export functionality provided by the application, e.g. for ImageTrend Elite the data would be produced as a NEMSIS Version 3 XML file(s), or by other native data export format should the application provide no export functionality. ImageTrend may redact or remove ImageTrend trade secret and confidential information, such as database schema design details, or data which is used solely in an operational or administrative fashion (e.g. data which was never entered by Client end-users). For clarity, ImageTrend may not redact or remove data that Client or Client's end-users entered. ImageTrend will provide this exported data to Client via secure electronic transfer, such as SFTP/FTPS. ImageTrend shall have 90 days from Client's request to produce the native data export for Client. Should Client desire the data to come in any alternative format, or be in any way different than as described in this section, Client must request those services from ImageTrend separately on a Time and Materials basis under its own time frame. ImageTrend will make efforts to accommodate Client's request, but ImageTrend is under no obligation to do so.

SECTION 8. IMAGETREND ELITE AUTHORIZED USERS AND SCOPE OF USAGE

This Grant of License is strictly conditioned on the Software being used by only Authorized Users. ImageTrend may audit Client's Software, users, and usage to ensure compliance with the scope of usage detailed by this Agreement, in ImageTrend's discretion. Non-compliance with the scope of usage shall be considered a material breach.

If this Agreement is for the licensing of ImageTrend Elite EMS, the following scope of usage and Authorized User definitions apply.

Organization Type	Organization Definition	Authorized User Definition
Private Agency	Client responds to emergency medical incidents for-profit or not-for-profit and the Client is not a Governmental Entity.	All employees & contractors of Client who respond to emergency medical incidents in the regular scope of their employment
Public Agency, County, Region, or City for its own employed EMS workers ("Public Agency")	Client responds to emergency medical incidents and transports patients therefrom and is a Governmental Entity	All employees & contractors of Client who respond to emergency medical incidents in the regular scope of their employment
Hospital or Health Network	Client is a 1) hospital, 2) health network, 3) or other medical institution that provides care which does not involve responding to emergency medical incidents and transporting patients therefrom as a primary service of the organization; and Client is recognized and licensed as such by the Client's governing State	All employees & contractors of Client who respond to emergency medical incidents in their regular scope of employment at or from the named Hospital brick-and-mortar locations. If the specific brick-and-mortar location(s) is not named in a Work Order, then it shall be interpreted as the brick-and-mortar location from which the Client primary contact, Tyler Rowser or their successor, conducts their job duties most frequently.
State, County, Region, City for its constituents	Client is a Governmental Entity with authority or an official	Licensed individuals within Client's legal or governing jurisdiction and

	mandate to improve, facilitate, organize, surveil, investigate, report, collect reports of, or otherwise govern public health matters; or another entity acting under a grant or contract of and for equivalent authority	geographic boundary, who to respond to emergency medical incidents in the regular scope of their employment, and not individuals whose primary job duty involves law enforcement.
Group Purchase (Multi-Agency)	Client(s) are a plurality of Private Agencies and/or Public Agencies	All employees & contractors of each named organization, who respond to emergency medical incidents
Financing Party (e.g. billing company) on behalf of Agency/City/County third party beneficiary	Client is an entity which does not respond to emergency medical incidents or provide for the care or transportation of patients; rather Client is an entity who procures or pays for a third party beneficiary who is a Private or Public Agency.	All employees & contractors of third party beneficiary Public or Private Agency, who respond to emergency medical incidents in the regular scope of their employment.

PRICE SHEET AND WORK ORDER ATTACHMENT

The prices below are based on the following SaaS transaction volumes, as provided by Client:
500 Incidents annually

One Time Fees

Description	SKU	Unit Price	Qty	Extended Amount
Elite™ Rescue Setup & Implementation	ELT.003.002.003	$5,625.00	1	$5,625.00
Webinar Training 2hr Session	ELT.006.003.009	$450.00	2	$900.00

Total One-Time Fees: $6,525.00

Recurring Fees

Description	SKU	Unit Price	Qty	Extended Amount
Elite™ Rescue - SaaS *Includes Elite™ Field	ELT.001.002.015	$5,000.00	1	$5,000.00
CAD Distribution	ELT.002.007.001	$3,500.00	1	$3,500.00
Other CAD Vendor	ELT.002.007.022	$0.00	1	$0.00
CrewSense Distribution	ELT.002.011.002	$3,500.00	1	$3,500.00
Investigations	ELT.001.002.018	$1,500.00	1	$1,500.00
Permits	ELT.001.002.021	$1,250.00	1	$1,250.00

Total Recurring Fees: $14,750.00

TOTAL YEAR 1: $21,275.00

Send Invoices To:

Tyler Rowser
trowser@northsummitfire.org
86 E. Center Street
Coalville, UT 84017

Payment Terms:

- "One Time Fees" are due once, as specified by the Milestone terms below.
- "Recurring Fees" are annual fees which recur each year. They are due on each anniversary of the fee, with the start date beginning upon completion as specified by the Milestone terms below. The Recurring Fees will escalate in price annually by 5% beginning on 02/13/2024 and each year thereafter.

- ImageTrend may temporarily suspend performance (e.g. cease to provide access, hosting, support) due to Client's breach of contract provided Client shall have 30 days to cure such breach before ImageTrend may suspend performance.
- ImageTrend may charge to Client a late fee of 1.5% per month, or the highest rate allowed under the law, whichever is lower, on any overdue amounts. Client also agrees ImageTrend may charge to Client all reasonable costs and expenses of collection, including attorneys' fees where, in ImageTrend's discretion, payments are consistently deficient or late.
- All Annual SaaS Fees are based upon anticipated transaction volumes (as provided by Client) and are subject to an annual usage audit. ImageTrend reserves the right to increase fees in accordance with increased transaction volume per the Unit Price listed in the tables above.
- ImageTrend will not be responsible for third-party fees related to this Agreement unless specifically outlined by this Agreement.

Optional Items

Items in the table below are not goods or services currently contracted or provided by this Agreement, rather, they are included to allow Client to add those goods or services by first providing written notice to ImageTrend, subsequently ImageTrend will provide Client with a Work Order for the Optional item, and upon Client's signature of that Work Order, ImageTrend will begin the work.

Product	SKU	Unit Price	Description
Connect Conference Registration (per Attendee)	ELT.007.004.001	$645.00	This includes the pre-purchase of the conference registrations in the contract. ImageTrend Connect is an annual user's conference that offers education from those who know the industry and ImageTrend best - your peers and the ImageTrend team. Attendees come from nationwide to connect with and learn from each other, share ideas and processes, examine key issues, celebrate successes and discuss challenges. This does not include travel or accommodations.
Elite Site to Site Transfers	ELT.002.010.016	$500.00	Elite Site to Site Transfers allows your agency to transfer EMS incidents in the field from your agency to other agencies using an Elite site that exists outside of your Elite System. The setup is based on a per agency basis.

MILESTONE 1

Site Available. ImageTrend software is available via the Web. This Site Available Milestone is complete when ImageTrend has provided Client: 1) at least one web URL to the ImageTrend software, and 2) a system administrator account with login credentials, and 3) Client is able to log into the ImageTrend software at that URL.

Description	Unit Price	Quantity	Extended Amount
Elite™ Rescue - SaaS *Includes Elite™ Field	$5,000.00	1	$5,000.00
Elite™ Rescue Setup & Implementation	$5,625.00	1	$5,625.00
Investigations	$1,500.00	1	$1,500.00
Permits	$1,250.00	1	$1,250.00
		Milestone 1 Total	$13,375.00

MILESTONE 2

Go Live. The parties understand that while the system can be infinitely configured and refined, that the software system must reach a level of readiness and it must "go-live" for usage by the end-users in its intended use cases. Client may desire staged roll out of different features or products for large implementations, or Client may desire to have all functions go live all at once. In the interest of defining a fair and objective measurement point, this Go Live Milestone will be complete when the Client's Software system processes, receives, transmits, generates, or otherwise interacts with the first non-test data record, excluding non-test data which is migrated on a one-time basis from another system.

Description	Unit Price	Quantity	Extended Amount
CAD Distribution	$3,500.00	1	$3,500.00
Other CAD Vendor	$0.00	1	$0.00
CrewSense Distribution	$3,500.00	1	$3,500.00
Webinar Training 2hr Session	$450.00	2	$900.00
		Milestone 2 Total	$7,900.00

SERVICE LEVEL AGREEMENT ATTACHMENT

ImageTrend is committed to offering exceptional levels of service to our customers. This Service Level Agreement ("SLA") guarantees your website or application's availability, reliability and performance. This SLA applies to any site or application hosted on our network.

1. Customer Support

ImageTrend is committed in providing an exceptional level of customer support. ImageTrend's servers are monitored 24 hours per day, 7 days per week, 365 days per year and our support staff is available via phone (888.469.7789) and email (www.imagetrend.com/support) as posted on the company's website. ImageTrend works to promptly resolve all issues reported by customers, and will acknowledge the disposition and potential resolution according to the chart below:

Severity Level	Example	Acknowledgement of Error Notice	Response Goal
High/Site Down	- Complete shutdown or partial shutdown of one or more Software functions - Access to one or more Software functions not available - Major subset of Software application impacted that is necessary for usage of the software	Within one (1) hour of initial notification during business hours or via support.imagetrend.com	Six (6) hours
Medium	- Minor subsystem failure -Data entry or access impaired on a limited basis.	Within four (4) hours of initial notification	24 Business hours
Low	- User error (i.e. training) or forgotten passwords - Issue can or must be delegated to local Client contact as a first level of response for resolution	Same day or next business day of initial notification	As appropriate depending on nature of issue and party responsible for resolution

2. Data Ownership

All customer data collected and maintained by ImageTrend shall at all times remain the property of the customer.

3. Data Protection

ImageTrend takes data privacy and cybersecurity very seriously. ImageTrend utilizes compliant and industry recognized best practices to ensure data security, and does not use or make available any personally identifiable information to third parties without customer consent or as required by law. ImageTrend acknowledges that its handling of information on behalf of customers may be subject to federal, state or local laws, rules, regulation and restrictions regarding the privacy of consumer information. ImageTrend agrees to comply with all of such laws, rules, regulations and restrictions at its sole cost and expense.

4. Suspension of Service
ImageTrend reserves the right to suspend and limit network resources to customers failing to pay the monthly fee in advance at its own discretion. In the event of service suspension, full service delivery will be restored within 48 hours from the date and time that payment is received.

5. Availability
ImageTrend is fully committed to providing quality service to all customers. To support this commitment, ImageTrend offers the following commitments related to application server Availability:

Availability Objective: ImageTrend will provide 99.5% Availability (as defined below) for the ImageTrend network services within ImageTrend's Immediate Control. For purposes, hereof, "Availability" or "Available" means the ImageTrend Services are available for access and use through the Internet.

"Immediate Control" includes ImageTrend's network services within the ImageTrend data center which extends to, includes and terminates at the Internet Service Provider ("ISP") circuit termination point on the router in ImageTrend's data center (*i.e.,* public Internet connectivity).

Specifically excluded from the definition of "Immediate Control" are the following:

a. Equipment, data, materials, software, hardware, services and/or facilities provided by or on behalf of Client or a third-party entity (or any of their vendors or service providers) and Client's or a third party entity's network services or end-user hardware.

b. Acts or omissions of Client, their employees, contractors, agents or representatives, third party vendors or service providers or anyone gaining access to the ImageTrend Services at the request of Client.

c. Issues arising from bugs, defects, or other problems in the software, firmware, or hardware of third parties.

d. Delays or failures due to circumstances beyond ImageTrend's reasonable control that could not be avoided by its exercise of due care.

e. Any outage, network unavailability or downtime outside the ImageTrend data center.

Availability Calculation: Availability is based on a monthly calculation. The calculation will be as follows: ((a – b) / a) x 100, where "a" is the total number of hours in a given calendar month, excluding Scheduled Maintenance (as defined below), and "b" is the total number of hours that service is not Available in a given month.

Offline Capability: The Software may have offline capability which provides redundancy when network or server back-end capability is not available. Periods of time when the Software's primary functions continue to function offline shall be excluded from the unavailability calculation "b" above.

Scheduled Maintenance: ImageTrend conducts scheduled maintenance, as necessary, every last Wednesday of the month. ImageTrend will perform scheduled maintenance within that maintenance window between the hours of 9:00 p.m. CST to 11:00 p.m. CST. ImageTrend may change the regularly scheduled maintenance window from time to time at ImageTrend's discretion upon reasonable notice to Client.

Service Disruption: Upon customer's written notice to ImageTrend, if Availability for the month is below the guaranteed level, ImageTrend will issue a credit to customer in accordance with the schedule below:

Availability: 99.0% - 99.5% = 5% of monthly hosting fee credited
95.0% - 98.99% = 10% of monthly hosting fee credited
90.0% - 94.99% = 15% of monthly hosting fee credited
89.99% or below = 2.5% for every 1% of lost Availability (in no event exceeding 50% of monthly hosting fees)

ImageTrend maintains precise and objective Availability metrics, which shall be determinative when calculating any customer requested credit. ImageTrend maintained Availability metrics shall only be requested in good faith to address material customer concerns. To receive a credit, customers must specifically request it during the month following the month for which the credit is requested. Credits shall not be issued if a customer account is past due, suspended or pending suspension.

6. General

ImageTrend reserves the right to change or modify this SLA and the related services being provided to benefit its customers, including changes to hosting environments and infrastructure, provided that any such improvements shall adhere to the regulatory guidelines and best practices referenced herein.

BUSINESS ASSOCIATE AGREEMENT ATTACHMENT

This Business Associate Agreement ("Agreement") dated 02/06/2023 (the "Effective Date"), is entered into by and between **North Summit Fire District** located at 86 E. Center Street, Coalville, UT 84017 (the "Covered Entity") and ImageTrend, Inc. a Minnesota corporation (the "Business Associate").

WHEREAS, Covered Entity (also referred to as "Client") and Business Associate have entered into, or are entering into, or may subsequently enter into, agreements or other documented arrangements (collectively, the "Business Arrangements") pursuant to which Business Associate may provide products and/or services for Covered Entity that require Business Associate to access, create and use health information that is protected by state and/or federal law; and

WHEREAS, pursuant to the Administrative Simplification provisions of the Health Insurance Portability and Accountability Act of 1996 ("HIPAA"), the U.S. Department of Health & Human Services ("HHS") promulgated the Standards for Privacy of Individually Identifiable Health Information (the "Privacy Standards"), at 45 C.F.R. Parts 160 and 164, requiring certain individuals and entities subject to the Privacy Standards (each a "Covered Entity", or collectively, "Covered Entities") to protect the privacy of certain individually identifiable health information ("Protected Health Information", or "PHI"); and

WHEREAS, pursuant to HIPAA, HHS has issued the Security Standards (the "Security Standards"), at 45 C.F.R. Parts 160, 162 and 164, for the protection of electronic protected health information ("EPHI"); and

WHEREAS, in order to protect the privacy and security of PHI, including EPHI, created or maintained by or on behalf of the Covered Entity, the Privacy Standards and Security Standards require a Covered Entity to enter into a "business associate agreement" with certain individuals and entities providing services for or on behalf of the Covered Entity if such services require the use or disclosure of PHI or EPHI; and

WHEREAS, on February 17, 2009, the federal Health Information Technology for Economic and Clinical Health Act was signed into law (the "HITECH Act"), and the HITECH Act imposes certain privacy and security obligations on Covered Entities in addition to the obligations created by the Privacy Standards and Security Standards; and

WHEREAS, the HITECH Act revises many of the requirements of the Privacy Standards and Security Standards concerning the confidentiality of PHI and EPHI, including extending certain HIPAA and HITECH Act requirements directly to business associates; and

WHEREAS, Business Associate and Covered Entity desire to enter into this Business Associate Agreement;

NOW THEREFORE, in consideration of the mutual promises set forth in this Agreement and the Business Arrangements, and other good and valuable consideration, the sufficiency and receipt of which are hereby severally acknowledged, the parties agree as follows:

1. **Business Associate Obligations**. Business Associate may receive from Covered Entity, or create or receive on behalf of Covered Entity, health information that is protected under applicable state and/or federal law, including without limitation, PHI and EPHI. All capitalized terms not

otherwise defined in this Agreement shall have the meanings set forth in the Privacy Standards, Security Standards or the HITECH Act, as applicable (collectively referred to hereinafter as the "Confidentiality Requirements"). All references to PHI herein shall be construed to include EPHI. Business Associate agrees not to use or disclose (or permit the use or disclosure of) PHI in a manner that would violate the Confidentiality Requirements if the PHI were used or disclosed by Covered Entity in the same manner.

2. **Use of PHI**. Except as otherwise required by law, Business Associate shall use PHI in compliance with 45 C.F.R. § 164.504(e). Furthermore, Business Associate shall use PHI (i) solely for Covered Entity's benefit and only for the purpose of performing services for Covered Entity as such services are defined in Business Arrangements, and (ii) as necessary for the proper management and administration of the Business Associate or to carry out its legal responsibilities, provided that such uses are permitted under federal and state law. Covered Entity shall retain all rights in the PHI not granted herein.

3. **Disclosure of PHI.** Subject to any limitations in this Agreement, Business Associate may disclose PHI to any third party persons or entities as necessary to perform its obligations under the Business Arrangement and as permitted or required by applicable federal or state law. Further, Business Associate may disclose PHI for the proper management and administration of the Business Associate, provided that (i) such disclosures are required by law, or (ii) Business Associate: (a) obtains reasonable assurances from any third party to whom the information is disclosed that it will be held confidential and further used and disclosed only as required by law or for the purpose for which it was disclosed to the third party; (b) requires the third party to agree to immediately notify Business Associate of any instances of which it is aware that PHI is being used or disclosed for a purpose that is not otherwise provided for in this Agreement or for a purpose not expressly permitted by the Confidentiality Requirements. Additionally, Business Associate shall ensure that all disclosures of PHI by Business Associate and the third party comply with the principle of "minimum necessary use and disclosure," i.e., only the minimum PHI that is necessary to accomplish the intended purpose may be disclosed; provided further, Business Associate shall comply with Section 13405(b) of the HITECH Act, and any regulations or guidance issued by HHS concerning such provision, regarding the minimum necessary standard and the use and disclosure (if applicable) of Limited Data Sets. If Business Associate discloses PHI received from Covered Entity, or created or received by Business Associate on behalf of Covered Entity, to agents, including a subcontractor (collectively, "Recipients"), Business Associate shall require Recipients to agree in writing to the same restrictions and conditions that apply to the Business Associate under this Agreement. Business Associate shall report to Covered Entity any use or disclosure of PHI not permitted by this Agreement, of which it becomes aware, such report to be made within three (3) business days of the Business Associate becoming aware of such use or disclosure. In addition to Business Associate's obligations under Section 9, Business Associate agrees to mitigate, to the extent practical and unless otherwise requested by Covered Entity in writing or as directed by or as a result of a request by Covered Entity to disclose to Recipients, any harmful effect that is known to Business Associate and is the result of a use or disclosure of PHI by Business Associate or Recipients in violation of this Agreement.

4. **Individual Rights Regarding Designated Record Sets.** If Business Associate maintains a Designated Record Set on behalf of Covered Entity, Business Associate shall (i) provide access to, and permit inspection and copying of, PHI by Covered Entity or, as directed by Covered Entity,

an individual who is the subject of the PHI under conditions and limitations required under 45 CFR §164.524, as it may be amended from time to time, and (ii) amend PHI maintained by Business Associate as requested by Covered Entity. Business Associate shall respond to any request from Covered Entity for access by an individual within five (5) days of such request and shall make any amendment requested by Covered Entity within ten (10) days of such request. Any information requested under this Section 4 shall be provided in the form or format requested, if it is readily producible in such form or format. Business Associate may charge a reasonable fee based upon the Business Associate's labor costs in responding to a request for electronic information (or a cost-based fee for the production of non-electronic media copies). Covered Entity shall determine whether a denial is appropriate or an exception applies. Business Associate shall notify Covered Entity within five (5) days of receipt of any request for access or amendment by an individual. Covered Entity shall determine whether to grant or deny any access or amendment requested by the individual. Business Associate shall have a process in place for requests for amendments and for appending such requests to the Designated Record Set, as requested by Covered Entity.

5. **Accounting of Disclosures.** Business Associate shall make available to Covered Entity in response to a request from an individual, information required for an accounting of disclosures of PHI with respect to the individual in accordance with 45 CFR §164.528, as amended by Section 13405(c) of the HITECH Act and any related regulations or guidance issued by HHS in accordance with such provision. Business Associate shall provide to Covered Entity such information necessary to provide an accounting within thirty (30) days of Covered Entity's request or such shorter time as may be required by state or federal law. Such accounting must be provided without cost to the individual or to Covered Entity if it is the first accounting requested by an individual within any twelve (12) month period. For subsequent accountings within a twelve (12) month period, Business Associate may charge a reasonable fee based upon the Business Associate's labor costs in responding to a request for electronic information (or a cost-based fee for the production of non-electronic media copies) so long as Business Associate informs the Covered Entity and the Covered Entity informs the individual in advance of the fee, and the individual is afforded an opportunity to withdraw or modify the request. Such accounting obligations shall survive termination of this Agreement and shall continue as long as Business Associate maintains PHI.

6. **Withdrawal of Authorization.** If the use or disclosure of PHI in this Agreement is based upon an individual's specific authorization for the use of his or her PHI, and (i) the individual revokes such authorization in writing, (ii) the effective date of such authorization has expired, or (iii) the consent or authorization is found to be defective in any manner that renders it invalid, Business Associate agrees, if it has notice of such revocation or invalidity, to cease the use and disclosure of any such individual's PHI except to the extent it has relied on such use or disclosure, or where an exception under the Confidentiality Requirements expressly applies.

7. **Records and Audit.** Business Associate shall make available to the U.S. Department of Health and Human Services or its agents, its internal practices, books, and records relating to the use and disclosure of PHI received from, created, or received by Business Associate on behalf of Covered Entity for the purpose of determining Covered Entity's compliance with the Confidentiality Requirements or any other health oversight agency, in a time and manner designated by the Secretary. Except to the extent prohibited by law, Business Associate agrees to notify Covered Entity immediately upon receipt by Business Associate of any and all requests

by or on behalf of any and all federal, state and local government authorities served upon Business Associate for PHI.

8. **Implementation of Security Standards; Notice of Security Incidents.** Business Associate will use appropriate safeguards to prevent the use or disclosure of PHI other than as expressly permitted under this Agreement. Business Associate will implement administrative, physical and technical safeguards that reasonably and appropriately protect the confidentiality, integrity and availability of the PHI that it creates, receives, maintains or transmits on behalf of Covered Entity. Business Associate acknowledges that the HITECH Act requires Business Associate to comply with 45 C.F.R. §§ 164.308, 164.310, 164.312, 164.314, and 164.316 as if Business Associate were a Covered Entity, and Business Associate agrees to comply with these provisions of the Security Standards and all additional security provisions of the HITECH Act. Furthermore, **to the extent feasible, Business Associate will use commercially reasonable efforts to** ensure that the technology safeguards used by Business Associate to secure PHI will render such PHI unusable, unreadable and indecipherable to individuals unauthorized to acquire or otherwise have access to such PHI in accordance with HHS Guidance published at 74 Federal Register 19006 (April 17, 2009), or such later regulations or guidance promulgated by HHS or issued by the National Institute for Standards and Technology ("NIST") concerning the protection of identifiable data such as PHI. Business Associate acknowledges and agrees that the HIPAA Omnibus Rule finalized January 25, 2013 at 78 Fed. Reg. 5566 requires Business Associate to comply with new and modified obligations imposed by that rule under 45 C.F.R. §164.306, 45 C.F.R. § 164.308, 45 C.F.R. § 163.310, 45 C.F.R. § 164.312, 45 C.F.R. § 164.316, 45 C.F.R. § 164.502, 45 C.F.R. § 164.504. Lastly, Business Associate will promptly report to Covered Entity any successful Security Incident of which it becomes aware. At the request of Covered Entity, Business Associate shall identify: the date of the Security Incident, the scope of the Security Incident, the Business Associate's response to the Security Incident and the identification of the party responsible for causing the Security Incident, if known. Business Associate and Covered Entity shall take reasonable measures to ensure the availability of all affirmative defenses under the HITECH Act, HIPAA, and other state and federal laws and regulations governing PHI and EPHI.

9. **Data Breach Notification and Mitigation**.

   A. HIPAA Data Breach Notification and Mitigation. Business Associate agrees to implement reasonable systems for the discovery and prompt reporting of any "breach" of "unsecured PHI" as those terms are defined by 45 C.F.R. §164.402 (hereinafter a "HIPAA Breach"). The parties acknowledge and agree that 45 C.F.R. §164.404, as described below in this Section 9.1, governs the determination of the date of a HIPAA Breach. In the event of any conflict between this Section 9.1 and the Confidentiality Requirements, the more stringent requirements shall govern. Business Associate will, following the discovery of a HIPAA Breach, notify Covered Entity immediately and in no event later than three (3) business days after Business Associate discovers such HIPAA Breach, unless Business Associate is prevented from doing so by 45 C.F.R. §164.412 concerning law enforcement investigations. For purposes of reporting a HIPAA Breach to Covered Entity, the discovery of a HIPAA Breach shall occur as of the first day on which such HIPAA Breach is known to the Business Associate or, by exercising reasonable diligence, would have been known to the Business Associate. Business Associate will be considered to have had knowledge of a HIPAA Breach if the HIPAA Breach is known, or

by exercising reasonable diligence would have been known, to any person (other than the person committing the HIPAA Breach) who is an employee, officer or other agent of the Business Associate. No later than seven (7) business days following a HIPAA Breach, Business Associate shall provide Covered Entity with sufficient information to permit Covered Entity to comply with the HIPAA Breach notification requirements set forth at 45 C.F.R. §164.400 *et seq*. Specifically, if the following information is known to (or can be reasonably obtained by) the Business Associate, Business Associate will provide Covered Entity with: (i) contact information for individuals who were or who may have been impacted by the HIPAA Breach (e.g., first and last name, mailing address, street address, phone number, email address); (ii) a brief description of the circumstances of the HIPAA Breach, including the date of the HIPAA Breach and date of discovery; (iii) a description of the types of unsecured PHI involved in the HIPAA Breach (e.g., names, social security number, date of birth, address(es), account numbers of any type, disability codes, diagnostic and/or billing codes and similar information); (iv) a brief description of what the Business Associate has done or is doing to investigate the HIPAA Breach, mitigate harm to the individual impacted by the HIPAA Breach, and protect against future HIPAA Breaches; and (v) appoint a liaison and provide contact information for same so that the Covered Entity may ask questions or learn additional information concerning the HIPAA Breach. Following a HIPAA Breach, Business Associate will have a continuing duty to inform Covered Entity of new information learned by Business Associate regarding the HIPAA Breach, including but not limited to the information described in items (i) through (v), above.

B. Data Breach Notification and Mitigation Under Other Laws. In addition to the requirements of Section 9.1, Business Associate agrees to implement reasonable systems for the discovery and prompt reporting of any breach of individually identifiable information (including but not limited to PHI, and referred to hereinafter as "Individually Identifiable Information") that, if misused, disclosed, lost or stolen, Covered Entity believes would trigger an obligation under one or more State data breach notification laws (each a "State Breach") to notify the individuals who are the subject of the information. Business Associate agrees that in the event any Individually Identifiable Information is lost, stolen, used or disclosed in violation of one or more State data breach notification laws, Business Associate shall promptly: (i) cooperate and assist Covered Entity with any investigation into any State Breach or alleged State Breach; (ii) cooperate and assist Covered Entity with any investigation into any State Breach or alleged State Breach conducted by any State Attorney General or State Consumer Affairs Department (or their respective agents); (iii) comply with Covered Entity's determinations regarding Covered Entity's and Business Associate's obligations to mitigate to the extent practicable any potential harm to the individuals impacted by the State Breach; and (iv) assist with the implementation of any decision by Covered Entity or any State agency, including any State Attorney General or State Consumer Affairs Department (or their respective agents), to notify individuals impacted or potentially impacted by a State Breach.

C. Breach Indemnification. Business Associate shall indemnify, defend and hold Covered Entity and its officers, directors, employees, agents, successors and assigns harmless, from and against all reasonable losses, claims, actions, demands, liabilities, damages, costs and expenses (including costs of judgments, settlements, court costs and

reasonable attorneys' fees actually incurred) (collectively, "Information Disclosure Claims") arising from or related to: (i) the use or disclosure of Individually Identifiable Information (including PHI) by Business Associate in violation of the terms of this Agreement or applicable law, and (ii) whether in oral, paper or electronic media, any HIPAA Breach of unsecured PHI and/or State Breach of Individually Identifiable Information by Business Associate. If Business Associate assumes the defense of an Information Disclosure Claim, Covered Entity shall have the right, at its expense and without indemnification notwithstanding the previous sentence, to participate in the defense of such Information Disclosure Claim. Business Associate shall not take any final action with respect to any Information Disclosure Claim without the prior written consent of Covered Entity. Covered Entity likewise shall not take any final action with respect to any Information Disclosure Claim without the prior written consent of Business Associate. To the extent permitted by law and except when caused by an act of Covered Entity or resulting from a disclosure to a Recipient required or directed by Covered Entity to receive the information, Business Associate shall be fully liable to Covered Entity for any acts, failures or omissions of Recipients in furnishing the services as if they were the Business Associate's own acts, failures or omissions.

A. **If Client is a Governmental Entity the following clause does <u>not</u> apply:** Covered Entity shall indemnify, defend and hold Business Associate and its officers, directors, employees, agents, successors and assigns harmless, from and against all reasonable losses, claims, actions, demands, liabilities, damages, costs and expenses (including costs of judgments, settlements, court costs and reasonable attorneys' fees actually incurred) (collectively, "Information Disclosure Claims") arising from or related to: (i) the use or disclosure of Individually Identifiable Information (including PHI) by Covered Entity, its subcontractors, agents, or employees in violation of the terms of this Agreement or applicable law, and (ii) whether in oral, paper or electronic media, any HIPAA Breach of unsecured PHI and/or State Breach of Individually Identifiable Information by Covered Entity, its subcontractors, agents, or employees.

B. Covered Entity and Business Associate shall seek to keep costs or expenses that the other may be liable for under this Section 9, including Information Disclosure Claims, to the minimum reasonably required to comply with the HITECH Act and HIPAA. Covered Entity and Business Associate shall timely raise all applicable affirmative defenses in the event a violation of this Agreement, or a use or disclosure of PHI or EPHI in violation of the terms of this Agreement or applicable law occurs.

10. <u>Term and Termination.</u>

A. This Agreement shall commence on the Effective Date and shall remain in effect until terminated in accordance with the terms of this Section 10, provided, however, that termination shall not affect the respective obligations or rights of the parties arising under this Agreement prior to the effective date of termination, all of which shall continue in accordance with their terms.

B. Covered Entity shall have the right to terminate this Agreement for any reason upon thirty (30) days written notice to Business Associate.

C. Covered Entity, at its sole discretion, may immediately terminate this Agreement and shall have no further obligations to Business Associate if any of the following events shall have occurred and be continuing:
   A. Business Associate fails to observe or perform any material covenant or obligation contained in this Agreement for ten (10) days after written notice thereof has been given to the Business Associate by Covered Entity; or
   B. A violation by the Business Associate of any provision of the Confidentiality Requirements or other applicable federal or state privacy law relating to the obligations of the Business Associate under this Agreement.

D. Termination of this Agreement for either of the two reasons set forth in Section 10.c above shall be cause for Covered Entity to immediately terminate for cause any Business Arrangement pursuant to which Business Associate is entitled to receive PHI from Covered Entity.

E. Upon the termination of all Business Arrangements, either Party may terminate this Agreement by providing written notice to the other Party.

F. Upon termination of this Agreement for any reason, Business Associate agrees either to return to Covered Entity or to destroy all PHI received from Covered Entity or otherwise through the performance of services for Covered Entity, that is in the possession or control of Business Associate or its agents. In the case of PHI which is not feasible to "return or destroy," Business Associate shall extend the protections of this Agreement to such PHI and limit further uses and disclosures of such PHI to those purposes that make the return or destruction infeasible, for so long as Business Associate maintains such PHI. Business Associate further agrees to comply with other applicable state or federal law, which may require a specific period of retention, redaction, or other treatment of such PHI.

11. **No Warranty.** PHI IS PROVIDED TO BUSINESS ASSOCIATE SOLELY ON AN "AS IS" BASIS. COVERED ENTITY DISCLAIMS ALL OTHER WARRANTIES, EXPRESS OR IMPLIED, INCLUDING, BUT NOT LIMITED TO, IMPLIED WARRANTIES OF MERCHANTABILITY, AND FITNESS FOR A PARTICULAR PURPOSE.

12. **Ineligible Persons.** Business Associate represents and warrants to Covered Entity that Business Associate (i) is not currently excluded, debarred, or otherwise ineligible to participate in any federal health care program as defined in 42 U.S.C. Section 1320a-7b(f) ("the Federal Healthcare Programs"); (ii) has not been convicted of a criminal offense related to the provision of health care items or services and not yet been excluded, debarred, or otherwise declared ineligible to participate in the Federal Healthcare Programs, and (iii) is not under investigation or otherwise aware of any circumstances which may result in Business Associate being excluded from participation in the Federal Healthcare Programs. This shall be an ongoing representation and warranty during the term of this Agreement, and Business Associate shall immediately notify Covered Entity of any change in the status of the representations and warranty set forth in this section. Any breach of this section shall give Covered Entity the right to terminate this Agreement immediately for cause.

13. **Miscellaneous.**
    A. **Notice**. All notices, requests, demands and other communications required or permitted to be given or made under this Agreement shall be in writing, shall be effective upon receipt or attempted delivery, and shall be sent by (i) personal delivery; (ii) certified or registered United States mail, return receipt requested; or (iii) overnight delivery service with proof of delivery. Notices shall be sent to the addresses below. Neither party shall refuse delivery of any notice hereunder.

If to Covered Entity:

ATTN: Compliance Department
86 E. Center Street
Coalville, UT 84017

If to Business Associate:

ImageTrend, Inc.
Attn: Michael J. McBrady
20855 Kensington Blvd.
Lakeville, MN 55044

14. **Waiver.** No provision of this Agreement or any breach thereof shall be deemed waived unless such waiver is in writing and signed by the Party claimed to have waived such provision or breach. No waiver of a breach shall constitute a waiver of or excuse any different or subsequent breach.

15. **Assignment**. Neither Party may assign (whether by operation or law or otherwise) any of its rights or delegate or subcontract any of its obligations under this Agreement without the prior written consent of the other Party. Notwithstanding the foregoing, Covered Entity shall have the right to assign its rights and obligations hereunder to any entity that is an affiliate or successor of Covered Entity, without the prior approval of Business Associate.

16. **Severability**. Any provision of this Agreement that is determined to be invalid or unenforceable will be ineffective to the extent of such determination without invalidating the remaining provisions of this Agreement or affecting the validity or enforceability of such remaining provisions.

17. **Entire Agreement**. This Agreement constitutes the complete agreement between Business Associate and Covered Entity relating to the matters specified in this Agreement, and supersedes all prior representations or agreements, whether oral or written, with respect to such matters. In the event of any conflict between the terms of this Agreement and the terms of the Business Arrangements or any such later agreement(s), the terms of this Agreement shall control unless the terms of such Business Arrangements are more strict with respect to PHI and comply with the Confidentiality Requirements, or the parties specifically otherwise agree in writing. No oral modification or waiver of any of the provisions of this Agreement shall be binding on either Party; provided, however, that upon the enactment of any law, regulation, court decision or relevant government publication and/or interpretive guidance or policy that the Covered Entity believes in good faith will adversely impact the use or disclosure of PHI under

this Agreement, Covered Entity may amend the Agreement to comply with such law, regulation, court decision or government publication, guidance or policy by delivering a written amendment to Business Associate which shall be effective thirty (30) days after receipt. No obligation on either Party to enter into any transaction is to be implied from the execution or delivery of this Agreement. This Agreement is for the benefit of, and shall be binding upon the parties, their affiliates and respective successors and assigns. No third party shall be considered a third-party beneficiary under this Agreement, nor shall any third party have any rights as a result of this Agreement.

18. **Governing Law**. This Agreement shall be governed by and interpreted in accordance with the laws of the state in which Business Associate is located, excluding its conflicts of laws provisions. Jurisdiction and venue for any dispute relating to this Agreement shall exclusively rest with the state and federal courts in the county in which Business Associate is located.

19. **Equitable Relief**. The parties understand and acknowledge that any disclosure or misappropriation of any PHI in violation of this Agreement will cause the other irreparable harm, the amount of which may be difficult to ascertain, and therefore agrees that the injured party shall have the right to apply to a court of competent jurisdiction for specific performance and/or an order restraining and enjoining any such further disclosure or breach and for such other relief as the injured party shall deem appropriate. Such right is to be in addition to the remedies otherwise available to the parties at law or in equity. Each party expressly waives the defense that a remedy in damages will be adequate and further waives any requirement in an action for specific performance or injunction for the posting of a bond.

IN WITNESS WHEREOF: the undersigned parties, each having authority to bind their respective organizations, hereby agree

Client	**ImageTrend**
Signature:	Signature:
Print Name:	Print Name:
Title:	Title:
Date:	Date:

2022 total calls 517

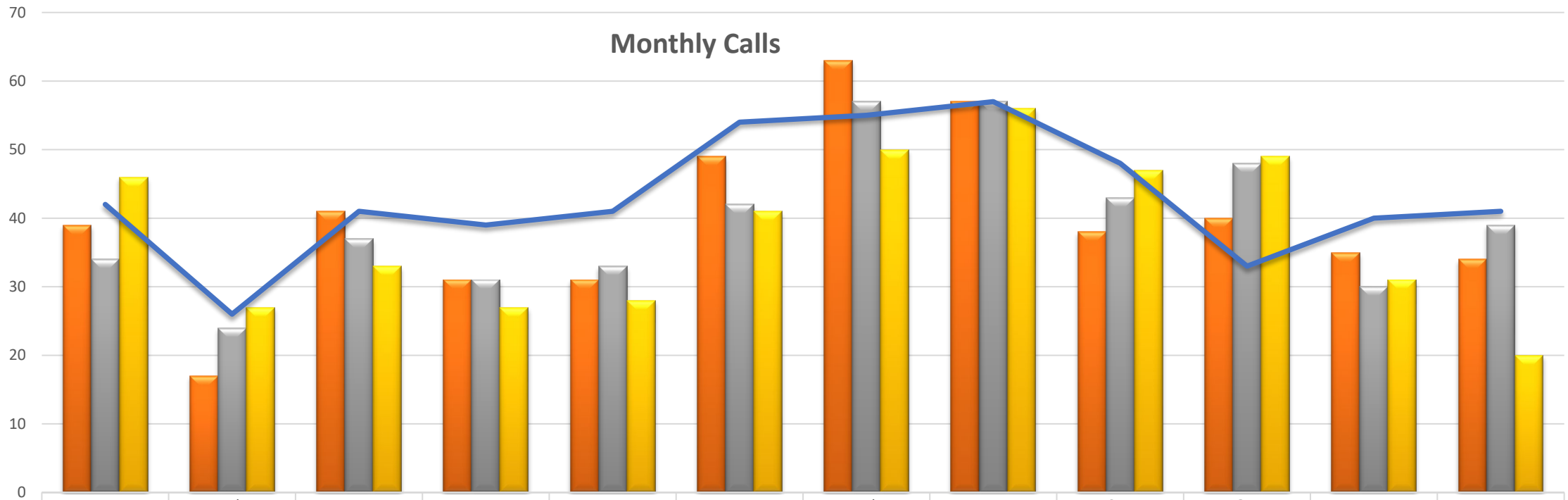

	Jan	Feb	Mar	Apr	May	Jun	Jul	Aug	Sep	Oct	Nov	Dec
2021	39	17	41	31	31	49	63	57	38	40	35	34
2020	34	24	37	31	33	42	57	57	43	48	30	39
2019	46	27	33	27	28	41	50	56	47	49	31	20
2022	42	26	41	39	41	54	55	57	48	33	40	41

Calls by Area

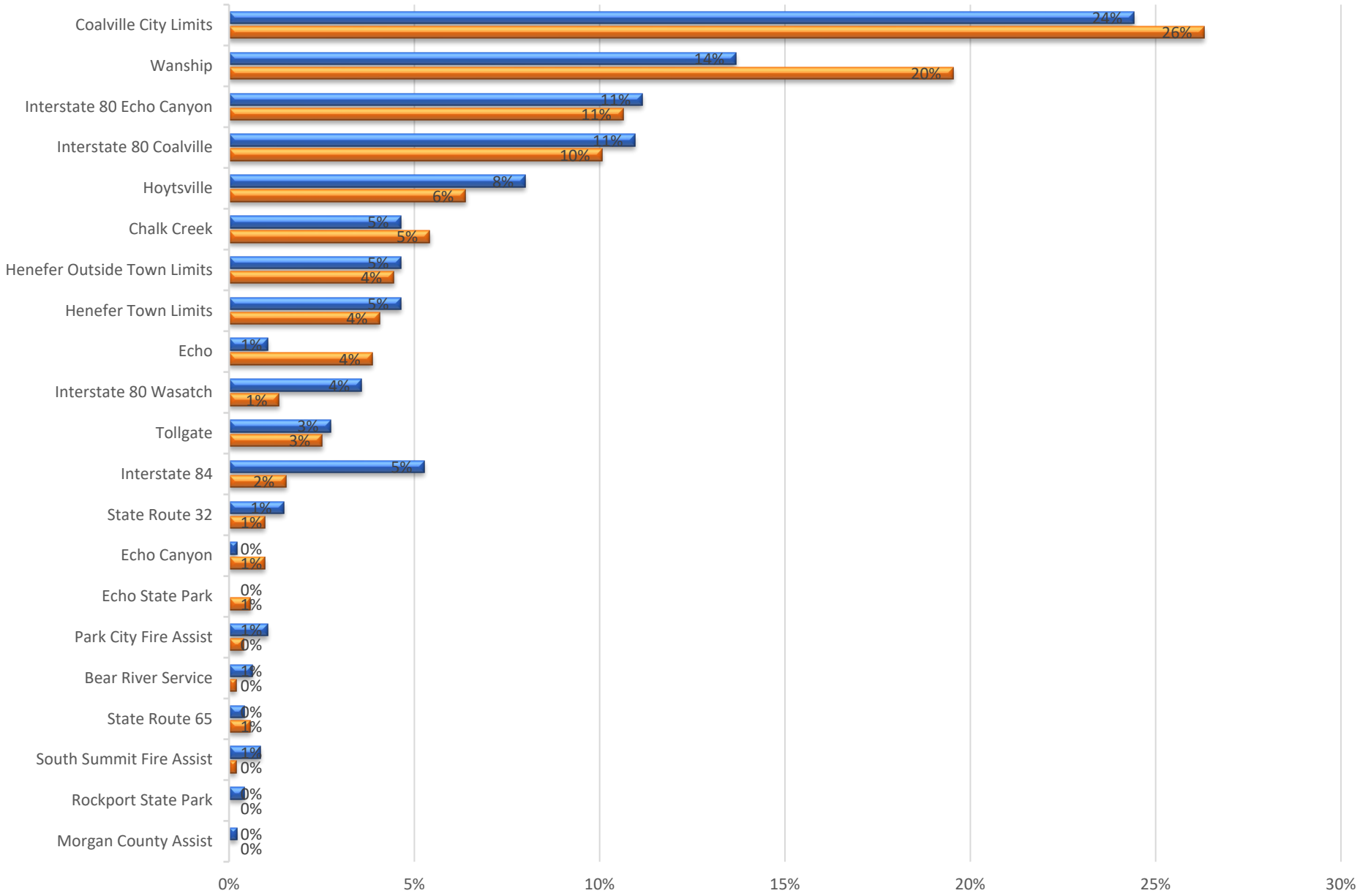

2022 Calls by Type

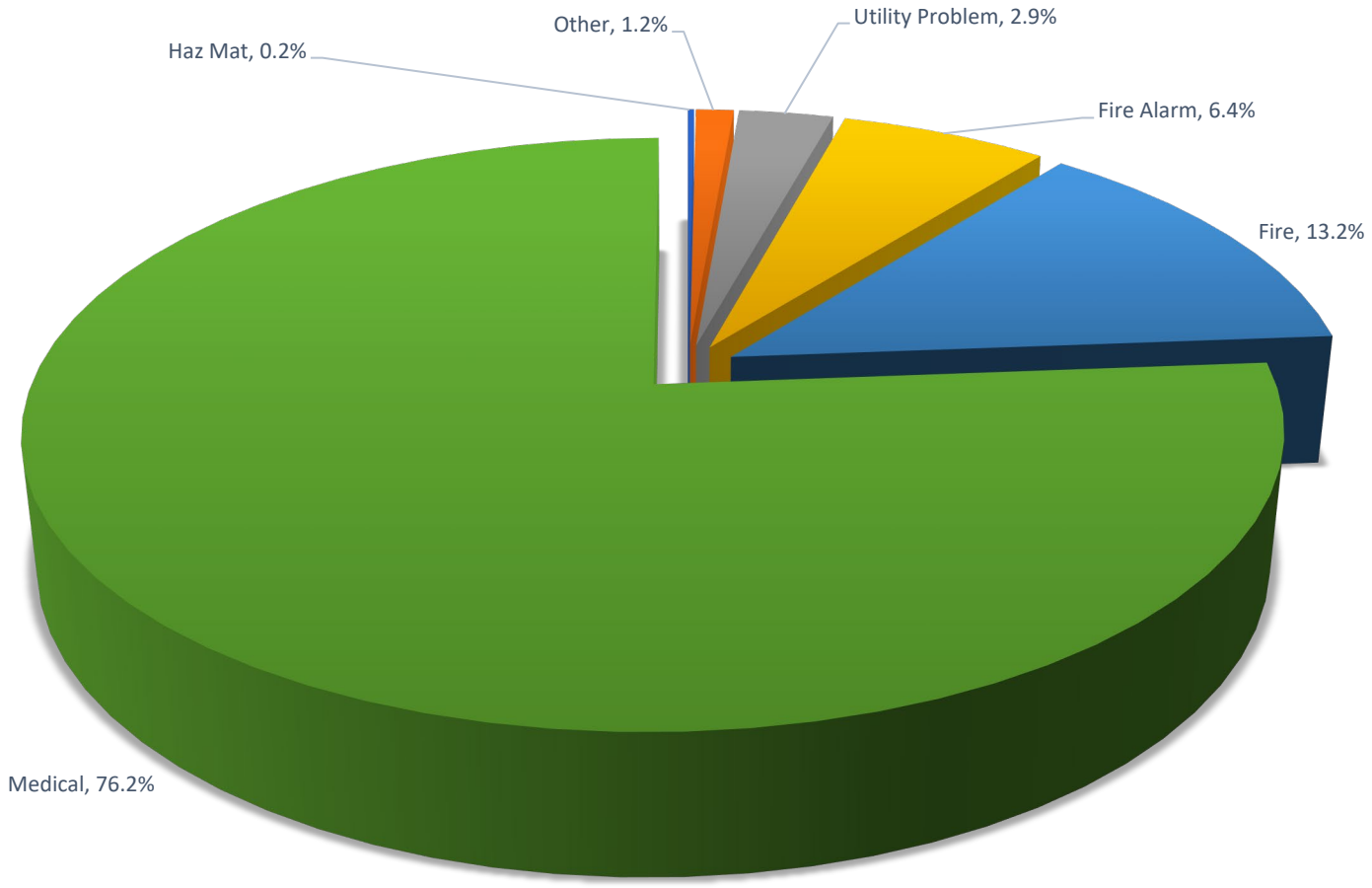

Haz Mat Other Utility Problem Fire Alarm Fire Medical

North Summit Fire District
Checks and Deposits
January 2023

Type	Date	Num	Name	Memo	Amount
1001 · Zions Bank					
Deposit	01/04/2023			Auto Ins Refund and Building Rent	327.55
Deposit	01/04/2023	ACH	Citizen	Plan Review	96.80
Deposit	01/06/2023	ACH	Citizen	Building Rent	19.32
Deposit	01/06/2023	ACH	Citizen	Plan Review	96.80
Deposit	01/09/2023	ACH	Public Treasures (PTIF) Operating	Fund Transfer	24,195.86
Deposit	01/09/2023	ACH	Citizen	Building Rent	38.94
Check	01/09/2023	ACH	Health Equity	Admin Fee	-2.00
Check	01/09/2023	ACH	Paylogics	Payroll Ending 12.31.22	-22,332.33
Deposit	01/10/2023	ACH	Paylogics	Payroll Correction	790.70
Deposit	01/11/2023	ACH	Citizen	Building Rent	78.18
Check	01/12/2023	ACH	Health Equity	HSA Front Load	-1,125.00
Check	01/13/2023	ACH	URS	Retirment PE 01.31.22	-738.63
Deposit	01/17/2023	ACH	Public Treasures (PTIF) Operating	AP Fund Transfer	16,875.85
Bill Pmt -Check	01/17/2023	4699	All West Communications	Telephone & Internet Service	-507.23
Bill Pmt -Check	01/17/2023	4700	Amazon Business	Supplies	-454.43
Bill Pmt -Check	01/17/2023	4701	AT&T Mobility	Cell Service	-80.08
Bill Pmt -Check	01/17/2023	4702	Dominion Energy	Gas Service	-1,901.94
Bill Pmt -Check	01/17/2023	4703	Fuel Network	Fuel	-1,540.29
Bill Pmt -Check	01/17/2023	4704	J Comm. Corp	Radio Antenna	-70.00
Bill Pmt -Check	01/17/2023	4705	Life-Assist	Medical Supplies	-106.37
Bill Pmt -Check	01/17/2023	4706	Republic Service	Trash Service	-379.59
Bill Pmt -Check	01/17/2023	4707	Rocky Mountain Power	Power Service	-836.06
Bill Pmt -Check	01/17/2023	4708	Summit County Health Insurance	Health and Dental Insurance	-1,791.00
Bill Pmt -Check	01/17/2023	4709	Summit Merc.	Supplies	-129.00
Bill Pmt -Check	01/17/2023	4710	Waxie Sanitary Supply	Cleaning Supplies	-436.15
Bill Pmt -Check	01/17/2023	4711	Zions Bank Bankcard Center	Visa Card Payment	-856.46
Bill Pmt -Check	01/17/2023	4712	Zions Bank Public Financial Services	Impact Fee Study Payment	-2,787.25
Deposit	01/18/2023	ACH	Citizen	Building Rent	58.56
Deposit	01/19/2023	ACH	Citizen	Building Rent	156.06
Deposit	01/24/2023	ACH	Public Treasures (PTIF) Operating	Fund Transfer	25,867.29
Check	01/24/2023	ACH	Paylogics	Payroll Ending 01.15.23	-21,379.26
Deposit	01/25/2023	ACH	Citizen	Plan Review	96.80
Bill Pmt -Check	01/27/2023	4713	KHSA	Quickbooks Hosting	-550.00
Bill Pmt -Check	01/27/2023	4714	Moore's Chevron and Towing LLC	Tow Engine to SLC	-600.00
Bill Pmt -Check	01/27/2023	4715	Summit Merc.	Tide Pods	-13.99
Bill Pmt -Check	01/27/2023		Whites Auto Parts	QuickBooks generated zero amount transa...	0.00
Bill Pmt -Check	01/27/2023	4716	Zions Bank Public Financial Services	Impact Fee Study work	-1,287.50
Deposit	01/27/2023		Summit County AP	Summit County Transfer for PCFD coverin...	125,000.00
Check	01/30/2023		Public Treasures (PTIF) Operating	Fund Transfer Summit County Transfer for ...	-125,000.00
Deposit	01/30/2023	ACH	Citizen	Plan Review	4.55
Check	01/30/2023	ACH	Health Equity	HSA PE 01.15.23	-81.52
Check	01/31/2023	ACH	URS	Retirment PE 01.15.23	-812.49
Total 1001 · Zions Bank					7,904.69
TOTAL					**7,904.69**

Minutes

North Summit Fire Service District
Administrative Control Board
Regular Meeting
Executive Conference Room
60 N Main St
Coalville, UT 84017
October 20, 2022

Chair Armstrong called the meeting to order at 6:14PM

Board Members Present
Chair Roger Armstrong
Vice Chair Jim Rees - Excused
Treasurer Michael Novak
Louise Willoughby
Chris Robinson – Joined at 7:08
Ari Ioannides – Excused at 8:35
Don Donaldson - Excused

Staff Present
Ben Nielson, Fire Chief
Tyler Rowser, District Clerk
Ryan Stack. Deputy County Attorney

Public Present
Matt Leavitt

Public Present Electronic

Item 2 Roll Call
A quorum was present.

Item 3 Pledge of Allegiance
Chair Armstrong lead the board and public in the pledge of allegiance.

Item 4 Closed session in compliance with Utah Code §52-4-205(1) as needed, to discuss:

a. Purchase, exchange, or lease of real property
b. Pending or reasonably imminent litigation
c. Personnel – to discuss the character, competence, or physical or mental health of an individual

Tabled

Item 5 Reconvene in Open Meeting

Item 6 Work Session

a. **Chief's Report. Discussion of current operational status.**
Chief Nielson discussed the current staffing, call volume for the past month and year to date. Also went over training that the district is conducting.
    i. Impact Fee update

DRAFT

Zions bank is still working on the impact fees and we are needing to have a general contractor look at our current buildings for what is needed and cost to remodel the stations for living quarters.

b. Update on Summit County EMS Services

Chair Armstrong updated on the board on the county councils decision to continue with the study that has been commissioned, and won't be making any changes until that study is completed.

c. Treasurer's Report.

Treasurer Novak explained the way the districts funds are held and invested and reviewed the budget for 2023.

d. Presentation on funding operations for 2023

Matt discussed the possibility of getting a tax anticipation note from Zions Bank, and the County Treasurer may also so a similar note until tax revenue comes in, in December 2023.

Item 7 Consideration of Approval

a. **Appointment of a member to the Utah Association of Special Districts Board of Representatives and an Alternate Member.**

Board Member Robinson motioned to appoint Treasurer Novak as the representative, Board Member Willoughby seconded the motion, a vote was called, all ayes, motion passed.

Board Member Robinson motioned to appoint Board Member Willoughby as the alternat representative, Treasurer Novak seconded the motion, a vote was called, all ayes, motion passed.

b. Discussion and possible approval of the roof repair at the Henefer Station, due to wind damage.

i. Tabled

c. Discussion and passable approval to enter into the Utah Communications Authority's cooperative purchase agreement for new public safety radios

Treasurer Novak motioned to enter into the Utah Communications Authority's cooperative purchases agreement for up to $80,000, Board Member Robinson seconded the motion, a roll call vote was called,

Board Member Willoughby Aye
Board Member Robinson Aye
Board Member Ioannides Abstain
Treasurer Novak Aye
Chair Armstrong Aye
Motion passed

d. **Discussion and possible recommendation to the Summit County Council of the 2023 tentative and 2022 amended operating and capital budgets**
The board discussed the need for possible procurement for the repairs and needed further information. Item was tabled

e. **Discussion and possible recommendation to the Summit County Council of the Personnel Policies**
Chair Armstrong recommend that everyone review this and provide feedback to Chief and Ryan. Chair Armstrong would like to have the document cleaned up and resent back out to the board for review.

f. Review and possible approval of Accounts Payable.
Treasurer Novak motioned to approve accounts payable, Board Member Robinson seconded the motion, a vote was called, all ayes, motion passed.

Item 8 Approval of Minutes.

August 11, 2022, September 8, 2022, September 19, 2022

Board Member Willoughby motioned to approve the above listed meeting minutes, Treasurer Novak seconded the motion, a vote was called, all ayes, motion passed.

Item 9 Board Comments.

None

Item 10 Adjourn.

Board Member Willoughby motioned to adjourn, Treasurer Novak seconded the motion, a vote was called, all ayes, motion passed, adjourned at 8:42PM

DRAFT

Minutes

North Summit Fire Service District
Administrative Control Board
Special Meeting
Executive Conference Room
60 N Main St
Coalville, UT 84017
October 24, 2022

Chair Armstrong called the meeting to order at 5:34PM

Board Members Present
Chair Roger Armstrong
Vice Chair Jim Rees
Treasurer Michael Novak
Louise Willoughby
Chris Robinson - Excused
Ari Ioannides
Don Donaldson - Excused

Staff Present
Ben Nielson, Fire Chief
Tyler Rowser, District Clerk
Ryan Stack. Deputy County Attorney

Public Present

Public Present Electronic

Item 2 Roll Call
A quorum was present.

Item 3 Pledge of Allegiance
Chair Armstrong lead the board and public in the pledge of allegiance.

Item 4 Consideration of Approval

a. **Consideration and possible approval of the engagement of Alpine Cleaning and Restoration to perform repairs to the Henefer fire station.**
Chief Nielson went through the cost and insurance claim information.
Chair Armstrong explained the exceptions to the bid process, as Alpine is on state contract.
Board Member Willoughby motioned to approve up to $39,516.02 to Alpine Cleaning and Restoration company that is on state contract for the services being performed to repair to the Henefer station and the contract for such services to be approved the county attorney and final approval by the chair, Treasurer Novak seconded the motion, a roll call vote was called,
Board Member Willoughby Aye
Board Member Ioannides Aye
Treasurer Novak Aye

DRAFT

Vice Chair Rees Aye
Chair Armstrong Aye
Motion Passed.

Item 5 Board Comments.

None

Item 6 Adjourn.

Board Member Ioannides motioned to adjourn, Vice Chair Rees seconded the motion, a vote was called, all ayes, motion passed adjourned at 5:46PM

DRAFT

Minutes

North Summit Fire Service District
Administrative Control Board
Regular Meeting
Executive Conference Room
60 N Main St
Coalville, UT 84017
January 12, 2023

Chair Armstrong called the meeting to order at 6:08PM

Board Members Present
Chair Roger Armstrong
Vice Chair Jim Rees - Excused
Treasurer Michael Novak
Louise Willoughby
Chris Robinson – Excused
Ari Ioannides – Excused
Don Donaldson

Staff Present
Ben Nielson, Fire Chief
Tyler Rowser, District Clerk
Ryan Stack. Deputy County Attorney

Public Present

Public Present Electronic

Item 2 Roll Call
A quorum was present.

Item 3 Pledge of Allegiance
Chair Armstrong lead the board and public in the pledge of allegiance.

Item 4 Closed session in compliance with Utah Code §52-4-205(1) as needed, to discuss:

a. Purchase, exchange, or lease of real property
b. Pending or reasonably imminent litigation
c. Personnel – to discuss the character, competence, or physical or mental health of an individual

No closed meeting was called.

Item 5 Reconvene in Open Meeting

Item 6 Work Session

a. **Discussion and election of board officers, Chair, Vice Chair and Treasurer.**
Roger proposed keeping the same officers. Treasurer Novak motioned for Roger Armstrong as Chair, Board Member Donaldson seconded the motion, a vote was called, all ayes, motion passed.

DRAFT

Bord Member Willoughby motioned Jim Rees Vice Chair, Board Member Donaldson seconded the motion, a vote was called, all ayes, motion passed.

Board Member Donaldson motioned Mike Novak Treasurer, Board Member Willoughby seconded the motion, a vote was called, all ayes, motion passed.

b. Appoint signers to the Zions Bank Checking Account and Public Treasurers Investment Fund

Board Member Donaldson motioned to keep the same signers on all accounts, Board Member Willoughby seconded the motion, a vote was called, all ayes, motion passed.

c. Discussion and possible approval of the annual meeting schedule

Board Member Willoughby motioned to approve the annual meeting schedule as proposed, Board Member Donaldson seconded the motion, a vote was called, all ayes, motion passed.

d. **Discussion and possible recommendation to the County Council of the promissory note between North Summit Fire District and Summit County Treasurer.**

The board discussed the terms of the note. Board Member Donaldson motioned to recommend the promissory note to the Council for approval, with the $1,000 fee removed, Treasurer Novak seconded the motion, a vote was called, all ayes, motion passed.

e. Discussion about the Community Development Block Grant (CDBG)

Chair Armstrong explained the process of applying for CDBG grant. Chief Nielson explained they he would like to apply for funding for a new fire engine. They board asked questions.

f. **Discussion and possible approval of Job Descriptions, Fire Caption - Operations, Fire Captain – Administrative, Engineer, Firefighter I/EMTB, Firefighter II/AEMT, Firefighter II/Paramedic**

Chief Nielson presented the descriptions, the board reviewed them and asked questions of the Chief. Board Member Willoughby motioned to approve the job descriptions above as presented by the chief, with the Admin Captain changes as discussed, Treasurer Novak seconded the motion, a vote was called, all ayes, motion passed.

g. **Discussion and possible approval of the First Responder Mental Health Services Grant Memorandum of Understanding**

Chief Nielson presented the MOU and discussed how this can be used to help the firefighters. Board Member Willoughby motioned to approve the MOU, Treasurer Novak seconded the motion, a vote was called, all ayes, motion passed.

DRAFT

h. Discussion and possible recommendation to the County Council for a public hearing and adoption of the Impact Fee Facilities Plan (IFFP)

Susie Becker explained how the impact fee study is formulated. The board had questions and determined that more information was needed before going forward.

i. Treasurer Report (Mike Novak)

Treasurer Novak let the board know that the council approved the amended 2022 budget and the 2023 budget.

j. Chief's Report. Discussion of current operational status.

Chief Neilson reported on the activities of the district, and process going forward with moving the department to a combination department.

k. Review and possible approval of Accounts Payable.

Clerk Rowser presented the accounts payable and answered questions about times. Treasurer Novak motioned to approve the accounts payable, Board Member Willoughby seconded the motion, a vote was called, all ayes, motion passed.

l. Review and possible approval of the meeting minutes of; October 20, 2022, October 24, 2022, and November 10, 2022

Treasurer Novak motioned to approve the minutes of November 10, 2022, Board Member Willoughby seconded the motion, a vote was called, all ayes, motion passed.

The minutes of October 20, 24, 2022 were tabled due to not enough members present who were at the meetings.

m. Board Comments.

Chair Armstrong asked if anyone had heard feedback from Truth in Taxation process.

Board Member Donaldson stated he hard from a few people.

Item 7 Adjourn.

Board Member Willoughby motioned to adjourn, Board Member Donaldson seconded the motion, a vote was called, all ayes, motion passed, adjourned at 8:16PM

DRAFT