CLARKSTON TOWN HALL
25 S. MAIN ST.
CLARKSTON, UT 84305

GENERAL NOTES:

1. ALL CONSTRUCTION AND DETAILS SHALL COMPLY WITH THE INTERNATIONAL RESIDENTIAL CODE AND STATE AND LOCAL CODES.
2.CONTRACTOR SHALL BE RESPONSIBLE FOR THE ACCURATE PLACEMENT OF THE BUILDING ON THE SITE. ALL DIMENSIONS SHALL BE VERIFIED IN THE FIELD BEFORE ANY WORK PROCEEDS.
3. GAS/PROPANE FORCED AIR HEAT THRU-OUT. SUBCONTRACTOR TO SUPPLY GENERAL CONTRACTOR WITH COMPLETE SHOP DRAWINGS AND HEAT LOSS CALCULATIONS. ALL WARM AIR DUCTS AND COLD AIR RETURNS SHOWN ARE FOR REFERENCE ONLY.
4. FLOOR JOISTS ARE TO BE AS PER FRAMING PLAN OR COMPATIBLE. FLOOR DEFLECTION MUST BE L/480 OR BETTER.
5. CONTRACTOR SHALL VERIFY AND BE RESPONSIBLE FOR ALL CONSTRUCTION DETAILS.
6. 5/8" TYPE "X" SHEET ROCK AT GARAGE WALLS CEILING AND BEARING WALLS COMMON TO HOUSE. INSULATE HOUSE WALLS.
7. WIRE FOR TELEPHONE AND TELEVISION JACKS (UL LISTED) GENERAL CONTRACTOR TO COORDINATE LOCATIONS WITH OWNER. ALL ELECTRICAL PARTS SHOWN ARE FOR REFERENCE ONLY. CHECK WITH OWNER FOR EXACT LOCATION.
8. CONTRACTOR SHALL VERIFY ALL BEAM AND JOISTS SIZES AND SPACING.
9. GENERAL CONTRACTOR TO VERIFY WITH OWNER ON ALL EXTERIOR DOOR AND WINDOW TYPES AND MANUFACTURER PRIOR TO THE STARTING OF ANY FRAMING.
10. SEE FOUNDATION PLAN FOR LOCATIONS OF FOUNDATION STRAPS.
11. ALL HEADERS & BEAMS ARE TO BE 2X10 DF #2 BTR UNLESS NOTED OTHER WISE.
12. ALL WINDOWS TO BE DOUBLE PANE LOW-E GRADE
13. ALL EXTERIOR BASEMENT WALLS TO HAVE A MINIMUM OF R-11 INSULATIONS
14. ALL EXTERIOR ABOVE GRADE WALLS TO HAVE A MINIMUM OF R-21 INSULATION UNLESS NOTED OTHER WISE.
15. ALL ATTIC SPACES TO HAVE A MINIMUM OF R-50 INSULATION UNLESS NOTED OTHER
16. ALL DOORS SEPARATING GARAGE FROM LIVING SPACE AND FURNACE ROOM TO MEET OR EXCEED CODE R302.5.1. (20-MINUTE FIRE-RATED DOORS, EQUIPPED WITH A SELF-CLOSING DEVICE.)
17. COMBUSTION AIR FOR FURNACE AND WATER HEATERS TO MEET OR EXCEED G2407
18. CLOTHES DRYER EXHAUST VENTS TO MEET OR EXCEED M1502 (VENTING CANNOT PENETRATE FIRE RATED CONSTRUCTION MATERIALS).
19. ARC FAULT PROTECTION TO BE PROVIDED AS PER 3802.12, AND BE COMBINATION TYPE.
20. TAMPER RESISTANT OUTLETS ARE TO BE INSTALLED THROUGHOUT THE ENTIRE PROJECT.
21. EXTERIOR OUTLETS WILL BE REQUIRED TO HAVE COVERS OVER THEM TO CONFORM WITH SECTION E3902.8 THROUGH E3902.10

PLOT PLAN
SCALE: 1" = 30'

BUILDING AREAS	
MAIN	
EXISTING	1494
PROPOSED	1831
TOTAL	3325
BASEMENT	
EXISTING	1494
PROPOSED	1831
TOTAL	3324

N

SHEET INDEX

ARCHITECT
JOSEPH T. BECK ARCGITECT.INC
650 NORTH 400 WEST
SMITHFIELD, UT 84335

A1	COVER PAGE & PLOT PLAN
A2	FOUNDATION/BASEMENT FLOOR PLAN
A3	MAIN FLOOR PLAN
A4	FRONT & RIGHT ELEVATIONS
A5	REAR & LEFT ELEVATIONS
A6	CROSS SECTIONS
A7	WALL ELEVATIONS
A8	WALL ELEVATIONS
A9	ROOF PLAN

CIVIL ENGINEERING
SUNRISE ENGINEERING
21 NORTH MAIN STREET
NORTH LOGAN, UT 84341
435-563-3734
WWW.SUNRISE-ENG.COM

SP1	DEMOLITION SITE PLAN
SP2	SITE PLAN

STRUCTURAL ENGINEERING
PRICE ENGINEERING
3677 NORTH HWY 126 SUITE 4B
FARR WEST, UT 84404

S1.0	FOUNDATION PLAN
S1.1	FIRST FLOOR FRAMING PLAN
S1.2	ROOF FRAMING PLAN
SD1	STRUCTURAL DETAILS
SD2	STRUCTURAL DETAILS
SD3	STRUCTURAL SCHEDULE & NOTES

MECHANICAL ENGINEERING
MORTENSEN ENGINEERING, INC
251 SOUTH 830 EAST
SMITHFIELD, UT 84335
435-770-5534
LORIN.MORTENSEN@COMCAST.NET

M0	MECHANICAL NOTES, SYMBOL LEGEND & SPECIFICATIONS
M1	BASEMENT MECHANICAL PLAN
M2	MAIN FLOOR MECHANICAL PLAN
M3	MECHANICAL DETAILS & SCHEDULES
P0	PLUMBING NOTES, SYMBOL LEGEND & SPECIFICATIONS
P1	BASEMENT PLUMBING PLAN
P2	MAIN FLOOR PLUMBING PLAN
P3	PLUMBING DETAILS & SCHEDULES

ELECTRICAL ENGINEERING
SIN SOURCE ENGINEERING
95 NORTH GOLF COURSE ROAD SUITE 102
LOGAN, UT 84321
435-787-1445
WWW.SINESOURSE.NET

E001	ABBREVIATIONS G.P.N. LEGEND & SHEET INDEX
E002	SPECIFICATIONS
E003	SPECIFICATIONS
ES101	ELECTRICAL SITE PLAN
ED101	ELECTRICAL DEMOLITION PLANS
E200	LIGHTING PLAN - LOWER LEVEL
E201	LIGHTING PLAN - UPPER LEVEL
E300	POWER PLAN - LOWER LEVEL
E301	POWER PLAN - UPPER LEVEL
E400	ELECTRICAL SYSTEMS PLAN - LOWER LEVEL
E401	ELECTRICAL SYSTEMS PLAN - UPPER LEVEL
E501	ELECTRICAL DETAILS
E601	ELECTRICAL ONE-TIME DIAGRAM

CODE REVIEW I.B.C. 2018

DESCRIPTION	IBC REFERENCE	REMARKS
OCCUPANCY ASSEMBLY A-3 COMMUNITY BUILDING	Chapter 3 SECTION NO. 303.4	
BASIC ALLOWABLE BUILDING HEIGHT, FLOOR AREA AND STORY IN HEIGHT MAX HEIGHT IN FEET (ALLOWED X A-3/VB/S) 60' ALLOWED MAXIMUM # OF FLOORS (A-3/VB/S) 2 STORIES ALLOWED A-3 OCCUPANCIES BASIC FLOOR AREA (ALLOWED - A-3/VB/SM) 18,000 SF. ALLOWABLE AREA 18,000 SF.	Chapter 5 Table No. 504.3 Table No. 504.4 Table No. 506.2 SECTION NO. 706	Provided: PROVIDED HT = 26'-0" PROVIDED STORIES = 2 (SPRINKLED - SM) ACTUAL S.F. = 3,325 S.F. (EACH FLOOR) 6,650 TOTAL S.F.
TYPE OF CONSTRUCTION Fire Resistive Requirements Building Element — TYPE A-3/VB — Fire Resistive Rating (in Hours) 1. Structural Frame 0 2. Exterior Bearing Walls 0 Interior Bearing Walls 0 3. Non-Bearing Walls - Exterior 0 4. Non-Bearing Walls - Interior 0 5. Floor Construction - Beams and Joists 0 6. Roof Construction - Beams and Joists 0	Chapter 6 Table No. 601	Comply
INTERIOR FINISHES SPRINKLERED - A-3 EXIT ENCLOSURES AND PASSAGEWAYS B CORRIDORS B ROOMS AND ENCLOSED SPACES C	Chapter 8 TABLE 803.13	WILL COMPLY WILL COMPLY WILL COMPLY
FIRE PROTECTION AUTOMATIC SPRINKLER SYSTEM - REQUIRED (2 STORY BUILDING - SM SYSTEM - NFPA 13D) FIRE ALARM SYSTEM - NOT REQUIRED MEANS OF EGRESS ILLUMINATION	Chapter 9 SECTION 903.2.1.3 SECTION 907.2.1 SECTION 1006.3	NOT REQUIRED LESS THAN 300 OCCS EMERGENCY LIGHTING SHALL BE PROVIDED THROUGHOUT
OCCUPANT LOAD ASSEMBLY A-3 COMMUNITY ROOMS - 3,615 S.F./ 15/OCC. = 235 OCCS BUSINESS B CITY OFFICES - 672 S.F./ 150/OCC. = 6 OCCS NON-CONTRIBUTING BATHS, CLOSETS, HALLS, WALLS, ETC. = 2,405 S.F. = 0 OCCS	Chapter 10 Table No. 1004.5	TOTAL OCCUPANTS = 241
EXITING TWO EXITS REQRD PER FLOOR/ROOMS GREATER THAN 49 OCCS ACCESSIBLE MEANS OF EGRESS	Chapter 10 TABLE 1004.5 SECTION 1007	7 EXITS PROVIDED 6 ACCESSIBLE = 98%
ACCESSIBILITY GROUP A-3 GOODS AND SERVICES WILL BE ACCESSIBLE TO PERSONS WITH DISABILITIES **FURNITURE LAYOUT SHALL BE PLACED TO PROVIDE ACCESSIBILITY THROUGHOUT THE SPACE.	Chapter 11	COMPLY

PLUMBING SYSTEMS	Chapter 29 TABLE 2902.1			
A-3 OCCS - CIVIC HALLS MALE = 71 OCCUPANTS	TOILET = 1	LAV = 1		
FEMALE = 71 OCCUPANTS	TOILET = 2	LAV = 1		SERVICE SINK = 1
TOTAL FIXTURES REQUIRED	TOILET = 3	LAV = 2		DFOUNTAIN = 1
TOTAL FIXTURES PROVIDED	TOILETS = 6	LAV = 4		SERVICE SINK = 1 DFOUNTAIN = 1

ALL WINDOWS TO BE DOUBLE PANE LOW-E GRADE (U-FACTOR 0.32)
ALL EXTERIOR BASEMENT WALLS TO HAVE A MINIMUM OF R-15/19
ALL EXTERIOR MAIN FLOOR WALLS TO HAVE A MINIMUM OF R-20+5 OR 13+10
ALL FLOOR JOIST CAVITIES TO HAVE A MINIMUM OF R-30
ALL SLAB ON GRADE AREAS TO HAVE 2" OF RIGID FOAM BOARD INSULATION WITH A MINIMUM OF R-10, 4 FT (GARAGES EXCLUDED)
ALL ATTIC SPACES TO HAVE A MINIMUM OF R-49

STATE OF UTAH
JOSEPH T. BECK
137544
LICENSED ARCHITECT

DO NOT SCALE 11"X17" PRINTS THEY ARE NOT TO SCALE

OWNER: JAY L. BAIR
PHONE: (435)770-8636
EMAIL: jay@bairdesigns.com
WEB: bairdesigns.com
336 SUNBURST LN.
RICHMOND, UT, 84333

©
DRAWN BY: NATALIE HANSEN
CHECKED BY: JAY L. BAIR
LLC
BAIRDESIGN

PROJECT FOR:
CLARKSTON CITY HALL

TITLE:
COVER PAGE & PLOT PLAN

DATE:
8/12/2022

PAGE #
A1

KEYNOTES

ITEM	QTY.
1 PAPER TOWEL DISPENSER	QTY. 3
2 COAT HOOK	QTY. 4
3 TOILET TISSUE DISPENSER SURFACE MOUNTED	QTY. 4
4 TOILET SEAT COVER DISPENSER	QTY. 4
5 HORIZONTAL GRAB BARS- 36", MOUNTED 33"-36" FROM THE FLOOR	QTY. 3
6 HORIZONTAL GRAB BARS- 42"MOUNTED 33"-36" FROM THE FLOOR	QTY. 3
7 VERTICAL GRAB BARS- 18"	QTY. 3
8 SOAP DISPENSER	QTY. 3
9 MIRROR FULL WIDTH X3' H. X1/4" THK. CLIP MOUNTED, FRAME-LESS W/J. MOLD AT BOTTOM.	QTY. 3
10 INFANT CHANGING TABLE AMERICAN INFANT CARE PRODUCTS CORP. "DIAPER DECK" SUPPLIED BY OPERATOR	QTY. 3
11 DIAPER DISPOSAL AMERICAN INFANT CARE PRODUCTS CORP. "DIAPER DUMPER" SUPPLIED BY OPERATOR	QTY. 3
12 ADA COMPLIANT TOILET	QTY. 3
13 56" x 60" CLEAR FLOOR SPACE AT TOILET	
14 30" x 48" CLEAR FLOOR SPACE AT LAVATORY	
15 24" x 36" CLEAR FLOOR SPACE AT CHANGING TABLE	
16 60" WHEELCHAIR TURNING SPACE	
17 WALL MOUNTED 10# FIRE EXTINGUISHER, 44" TO HANDLE FROM FLOOR (MAX HEIGHT 48")	QTY. 4
18 DRINKING FOUNTAIN	QTY. 2

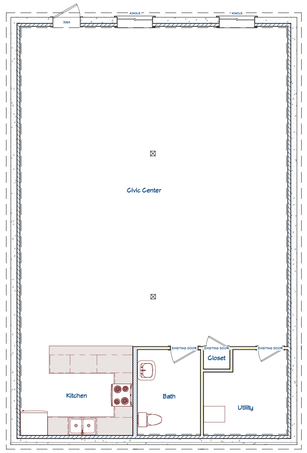

EXISTING BASEMENT FLOOR
CONDITIONS BEFORE REMODEL

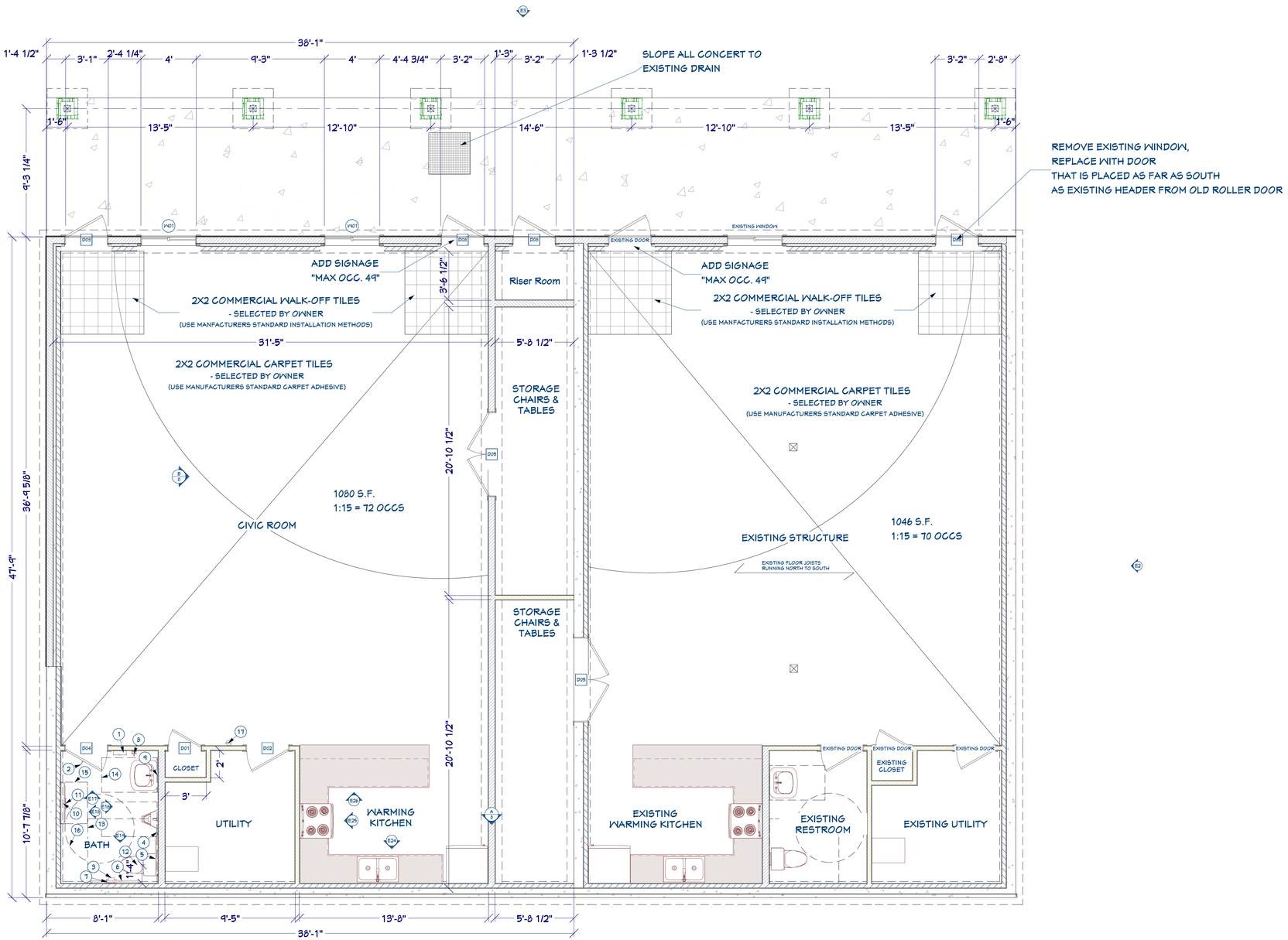

EXISTING AREA 1494 SQ FT
NEW ADDITION AREA 1831 SQ FT
BASEMENT PLAN
SCALE: 1/4" = 1'

ALL WINDOWS TO BE DOUBLE PANE LOW-E GRADE (U-FACTOR 0.32)
ALL EXTERIOR BASEMENT WALLS TO HAVE A MINIMUM OF R-15/19
ALL EXTERIOR MAIN FLOOR WALLS TO HAVE A MINIMUM OF R-20+5 OR 13+10
ALL FLOOR JOIST CAVITIES TO HAVE A MINIMUM OF R-30
ALL SLAB ON GRADE AREAS TO HAVE 2" OF RIGID FOAM BOARD INSULATION WITH A MINIMUM OF R-10, 4 FT (GARAGES EXCLUDED)
ALL ATTIC SPACES TO HAVE A MINIMUM OF R-49

STATE OF UTAH
JOSEPH
BECK
137544
LICENSED ARCHITECT

DO NOT SCALE 11"X17" PRINTS
THEY ARE NOT TO SCALE

OWNER: JAY L. BAIR
PHONE: (435)770-8636
EMAIL: jay@bairdesigns.com
WEB: bairdesigns.com
336 SUNBURST LN.
RICHMOND, UT, 84333

©

DRAWN BY: NATALIE HANSEN
LLC CHECKED BY: JAY L. BAIR

BAIRDESIGN

PROJECT FOR:
CLARKSTON CITY HALL

TITLE:
FOUNDATION PLAN

DATE:
8/12/2022

PAGE #
A2

KEYNOTES

ITEM		QTY.
1	PAPER TOWEL DISPENSER	QTY. 3
2	COAT HOOK	QTY. 4
3	TOILET TISSUE DISPENSER SURFACE MOUNTED	QTY. 4
4	TOILET SEAT COVER DISPENSER	QTY. 4
5	HORIZONTAL GRAB BARS- 36", MOUNTED 33"-36" FROM THE FLOOR	QTY. 3
6	HORIZONTAL GRAB BARS- 42"MOUNTED 33"-36" FROM THE FLOOR	QTY. 3
7	VERTICAL GRAB BARS- 18"	QTY. 3
8	SOAP DISPENSER	QTY. 3
9	MIRROR FULL WIDTH X3' H. X1/4" THK. CLIP MOUNTED, FRAME-LESS W/J. MOLD AT BOTTOM.	QTY. 3
10	INFANT CHANGING TABLE AMERICAN INFANT CARE PRODUCTS CORP. "DIAPER DECK" SUPPLIED BY OPERATOR	QTY. 3
11	DIAPER DISPOSAL AMERICAN INFANT CARE PRODUCTS CORP. "DIAPER DUMPER" SUPPLIED BY OPERATOR	QTY. 3
12	ADA COMPLIANT TOILET	QTY. 3
13	56" x 60" CLEAR FLOOR SPACE AT TOILET	
14	30" x 48" CLEAR FLOOR SPACE AT LAVATORY	
15	24" x 36" CLEAR FLOOR SPACE AT CHANGING TABLE	
16	60" WHEELCHAIR TURNING SPACE	
17	WALL MOUNTED 10# FIRE EXTINGUISHER, 44" TO HANDLE FROM FLOOR (MAX HEIGHT 48")	QTY. 4
18	DRINKING FOUNTAIN	QTY. 2

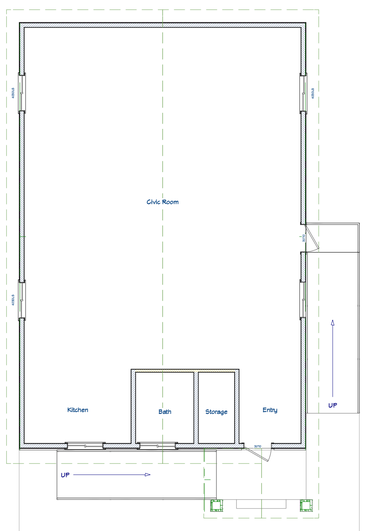

EXISTING MAIN FLOOR
CONDITIONS BEFORE REMODEL

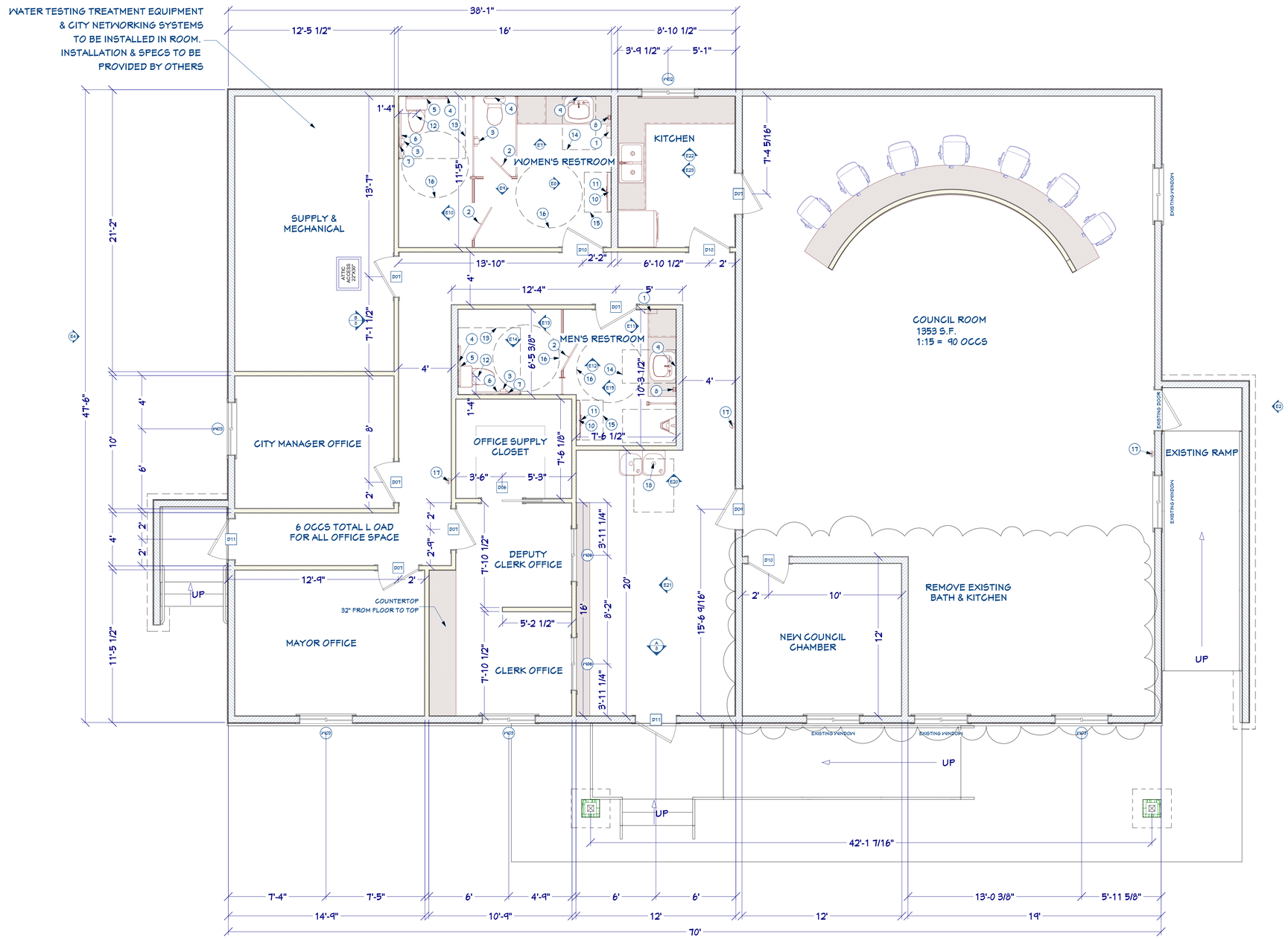

EXISTING AREA 1494 SQ FT
NEW ADDITION AREA 1831 SQ FT
MAIN FLOOR PLAN
SCALE: 1/4" = 1'

REMOVE EXISTING FRONT COLUMNS, & REPLACE WITH NEW FRONT COLUMNS

SEE ELEVATIONS FOR DOWNSPOUT LOCATIONS

WINDOW SCHEDULE						
NUMBER	QTY	FLOOR	SIZE	DIMENSIONS	EGRESS	TEMPERED
W01	2	0	4040LS	48"X48"LS		
W02	1	1	4020LS	48"X24"LS		
W03	4	1	4030LS	48"X36"LS		
W06	2	1	4044LS	48"X52"LS		

DOOR SCHEDULE					
NUMBER	QTY	FLOOR	SIZE	DIMENSIONS	R/O
D01	1	0	2468 R IN	28"X80"X1 3/8" R IN	30"X82 1/2"
D02	1	0	3068 L IN	36"X80"X1 3/8" L IN	38"X82 1/2"
D03	1	0	3068 L EX	36"X80"X1 3/4" L EX	38"X83"
D04	1	0	3068 R IN	36"X80"X1 3/8" R IN	38"X82 1/2"
D05	2	0	6068 L/R IN	(2) 36"X80"X1 3/8" L/R IN	74"X82 1/2"
D06	1	1	3068 L	36"X80"X1 3/8" L	74"X82 1/2"
D07	6	1	3068 L IN	36"X80"X1 3/8" L IN	38"X82 1/2"
D08	3	0	3068 R EX	36"X80"X1 3/4" R EX	38"X83"
D09	1	1	3068 R IN	36"X80"X1 3/4" R IN	38"X82 1/2"
D10	3	1	3068 R IN	36"X80"X1 3/8" R IN	38"X82 1/2"
D11	2	1	3068 R EX	36"X80"X1 3/4" R EX	38"X83"

ALL WINDOWS TO BE DOUBLE PANE LOW-E GRADE (U-FACTOR 0.32)
ALL EXTERIOR BASEMENT WALLS TO HAVE A MINIMUM OF R-15/19
ALL EXTERIOR MAIN FLOOR WALLS TO HAVE A MINIMUM OF R-20+5 OR 13+10
ALL FLOOR JOIST CAVITIES TO HAVE A MINIMUM OF R-30
ALL SLAB ON GRADE AREAS TO HAVE 2" OF RIGID FOAM BOARD INSULATION WITH A MINIMUM OF R-10, 4 FT (GARAGES EXCLUDED)
ALL ATTIC SPACES TO HAVE A MINIMUM OF R-49

STATE OF UTAH
JOSEPH A. BACK
137544
LICENSED ARCHITECT

DO NOT SCALE 11"X17" PRINTS THEY ARE NOT TO SCALE

OWNER: JAY L. BAIR
PHONE: (435)770-8636
EMAIL: jay@bairdesigns.com
WEB: bairdesigns.com
336 SUNBURST LN.
RICHMOND, UT, 84333

©

DRAWN BY: NATALIE HANSEN
CHECKED BY: JAY L. BAIR

BAIRDESIGN LLC

PROJECT FOR:
CLARKSTON CITY HALL

TITLE:
FLOOR PLAN

DATE:
8/12/2022

PAGE #
A3

ALL EXTERIOR SIDING TO BE REMOVED,
REPLACED WITH NEW CORRUGATED METAL SIDING

ENTIRE EXISTING ROOF TO BE REMOVED

ALL HANDRAILS ARE REQUIRED

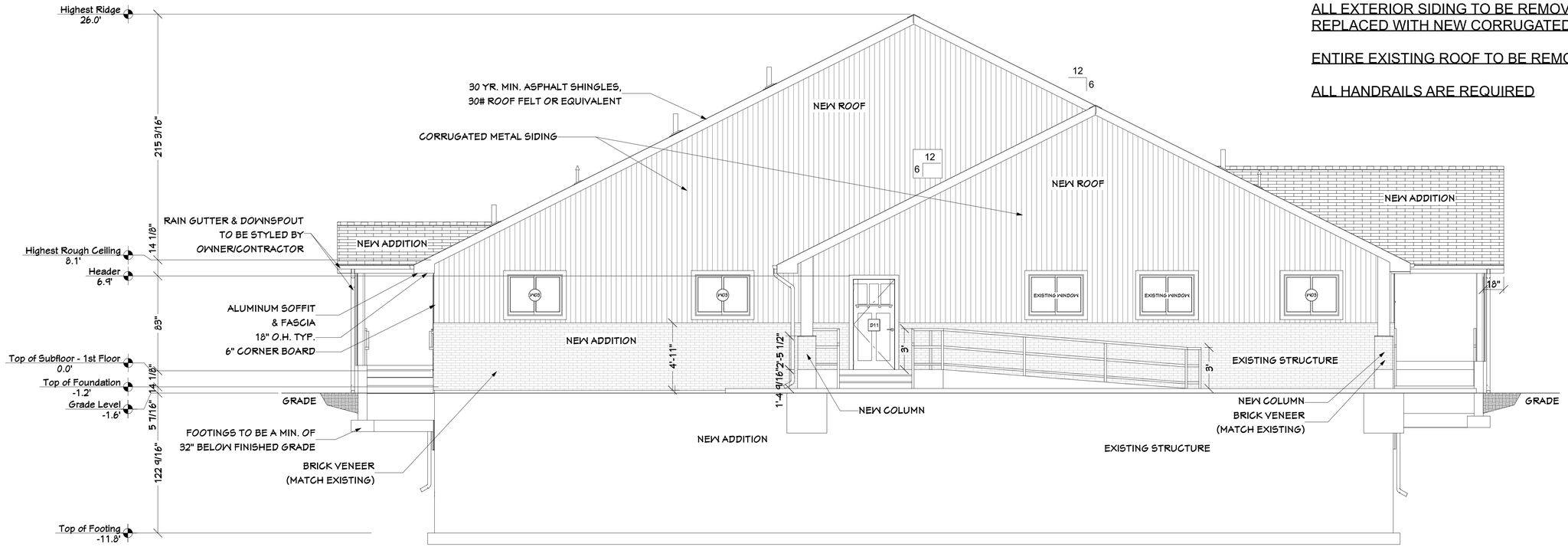

E1 FRONT ELEVATION
SCALE: 1/4" = 1'

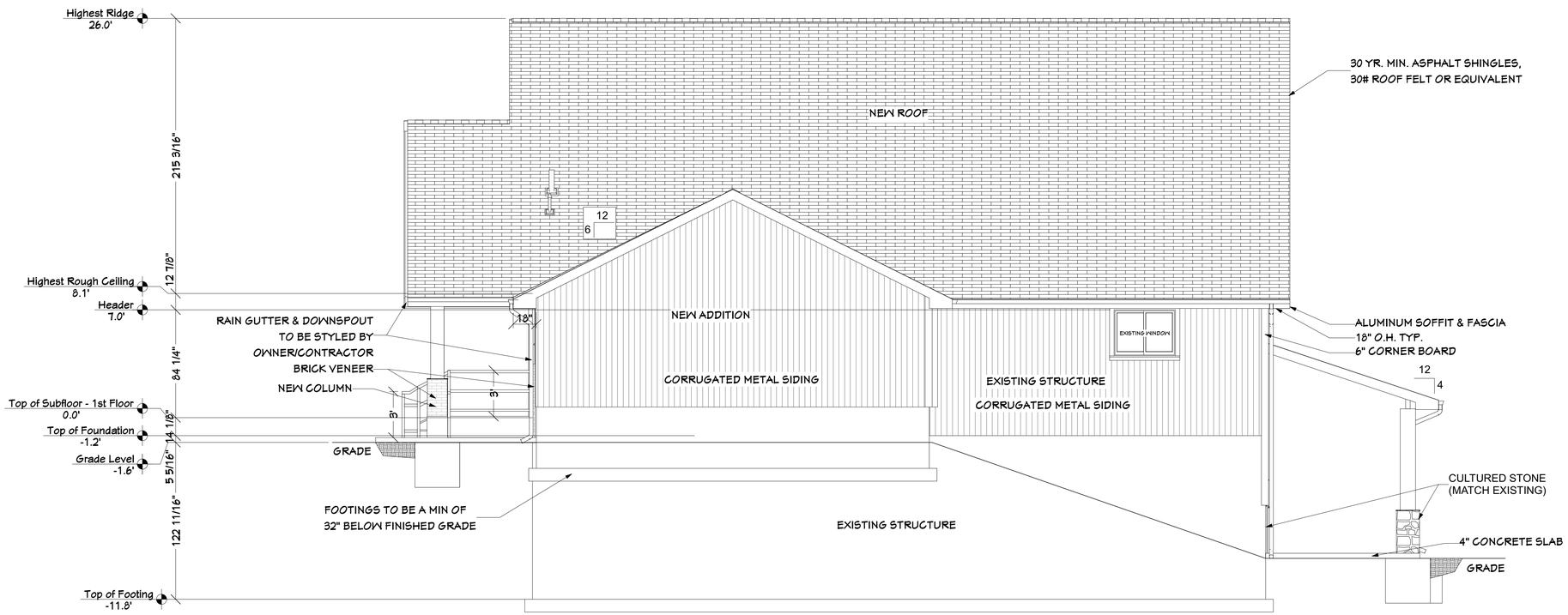

E2 RIGHT ELEVATION
SCALE: 1/4" = 1'

STATE OF UTAH
JOSEPH
BACK
137544
LICENSED ARCHITECT

DO NOT SCALE 11"X17" PRINTS
THEY ARE NOT TO SCALE

OWNER: JAY L. BAIR
PHONE: (435)770-8636
EMAIL: jay@bairdesigns.com
WEB: bairdesigns.com
336 SUNBURST LN.
RICHMOND, UT, 84333

©

DRAWN BY: NATALIE HANSEN
LLC CHECKED BY: JAY L. BAIR

BAIRDESIGN

PROJECT FOR:
CLARKSTON CITY HALL

TITLE:
FRONT & RIGHT ELEVATIONS

DATE:
8/12/2022

PAGE #
A4

ALL EXTERIOR SIDING TO BE REMOVED,
REPLACED WITH NEW CORRUGATED METAL SIDING

ENTIRE EXISTING ROOF TO BE REMOVED

ALL HANDRAILS ARE REQUIRED

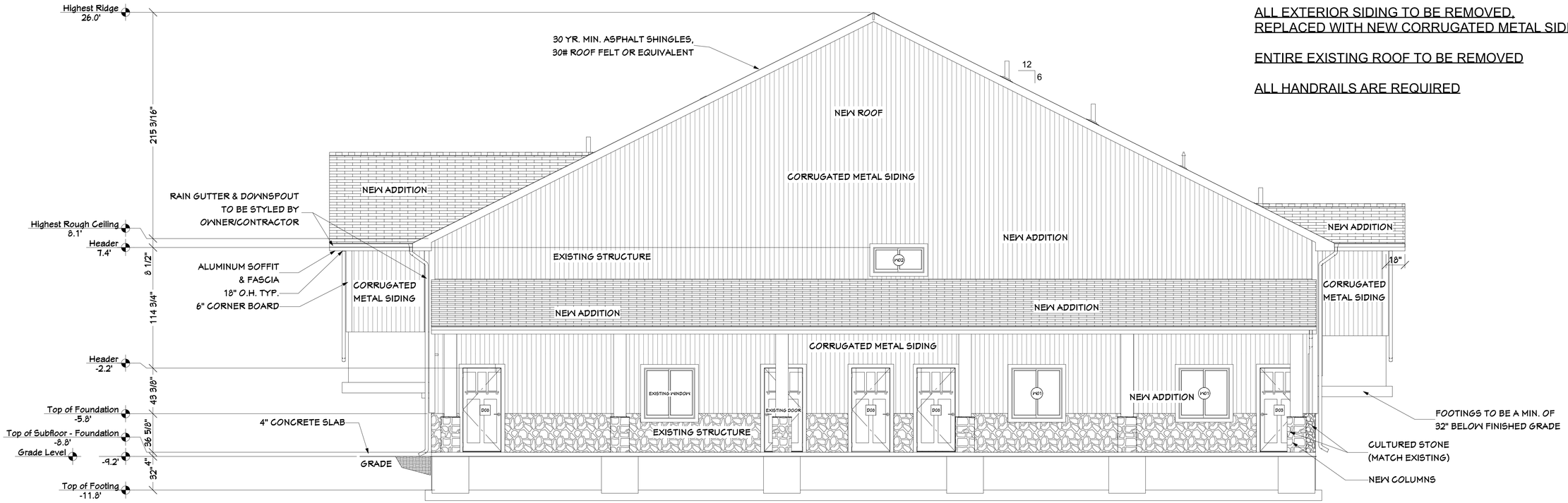

E3 REAR ELEVATION
SCALE: 1/4" = 1'

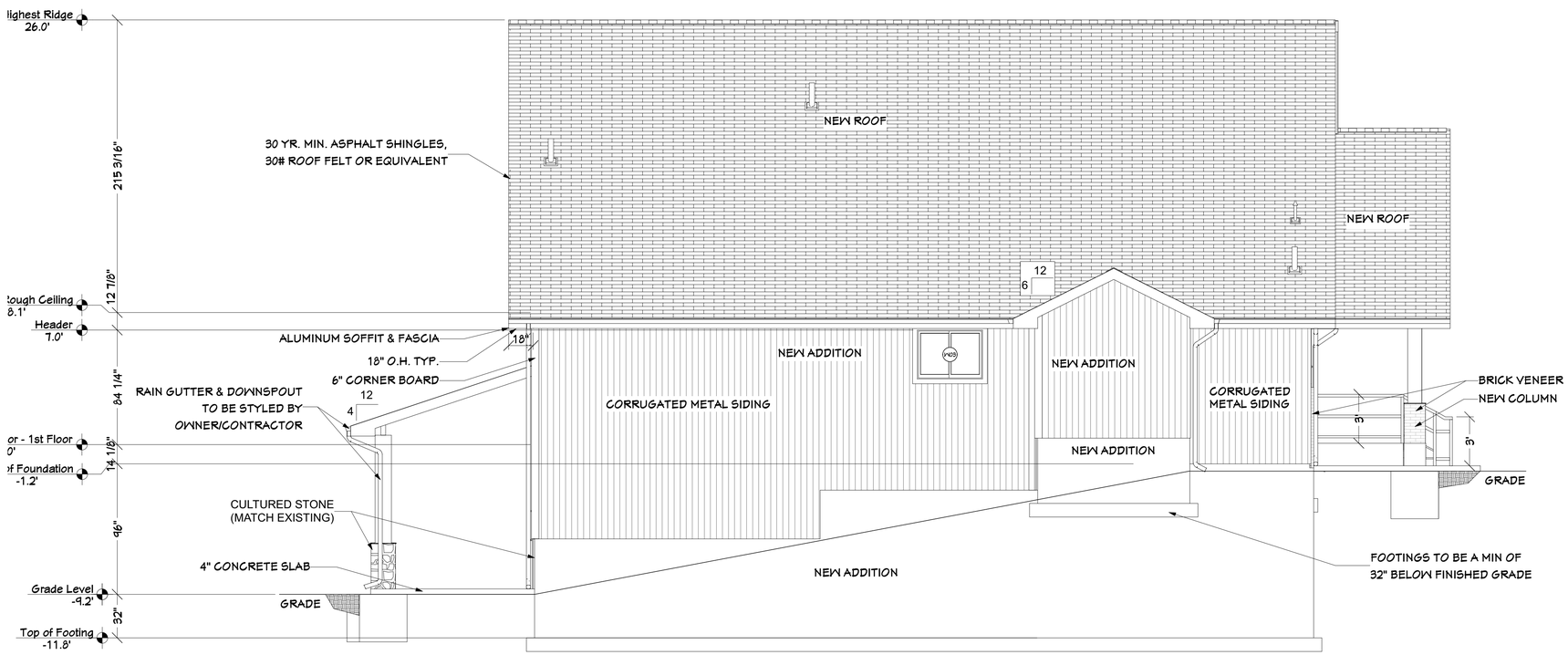

E4 LEFT ELEVATION
SCALE: 1/4" = 1'

STATE OF UTAH
JOSEPH
BECK
137544
LICENSED ARCHITECT

DO NOT SCALE 11"X17" PRINTS
THEY ARE NOT TO SCALE

OWNER: JAY L. BAIR
PHONE: (435)770-8636
EMAIL: jay@bairdesigns.com
WEB: bairdesigns.com
336 SUNBURST LN.
RICHMOND, UT, 84333

©

DRAWN BY: NATALIE HANSEN
CHECKED BY: JAY L. BAIR

BAIRDESIGN LLC

PROJECT FOR:
CLARKSTON CITY HALL

TITLE:
REAR & LEFT ELEVATIONS

DATE:
8/12/2022

PAGE #
A5

ENTIRE EXISTING ROOF TO BE REMOVED

ALL HANDRAILS ARE REQUIRED

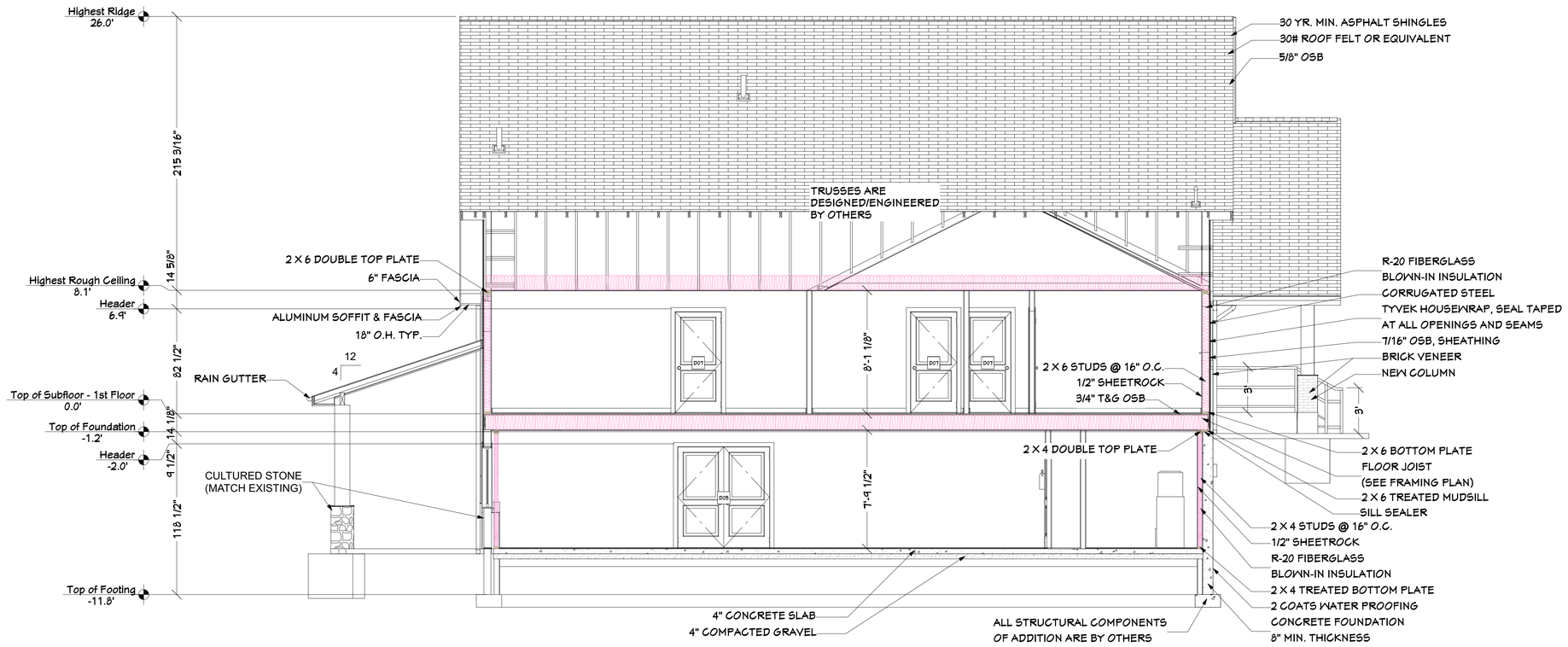

B 8 CROSS SECTION - SOUTH
SCALE: 1/4" = 1'

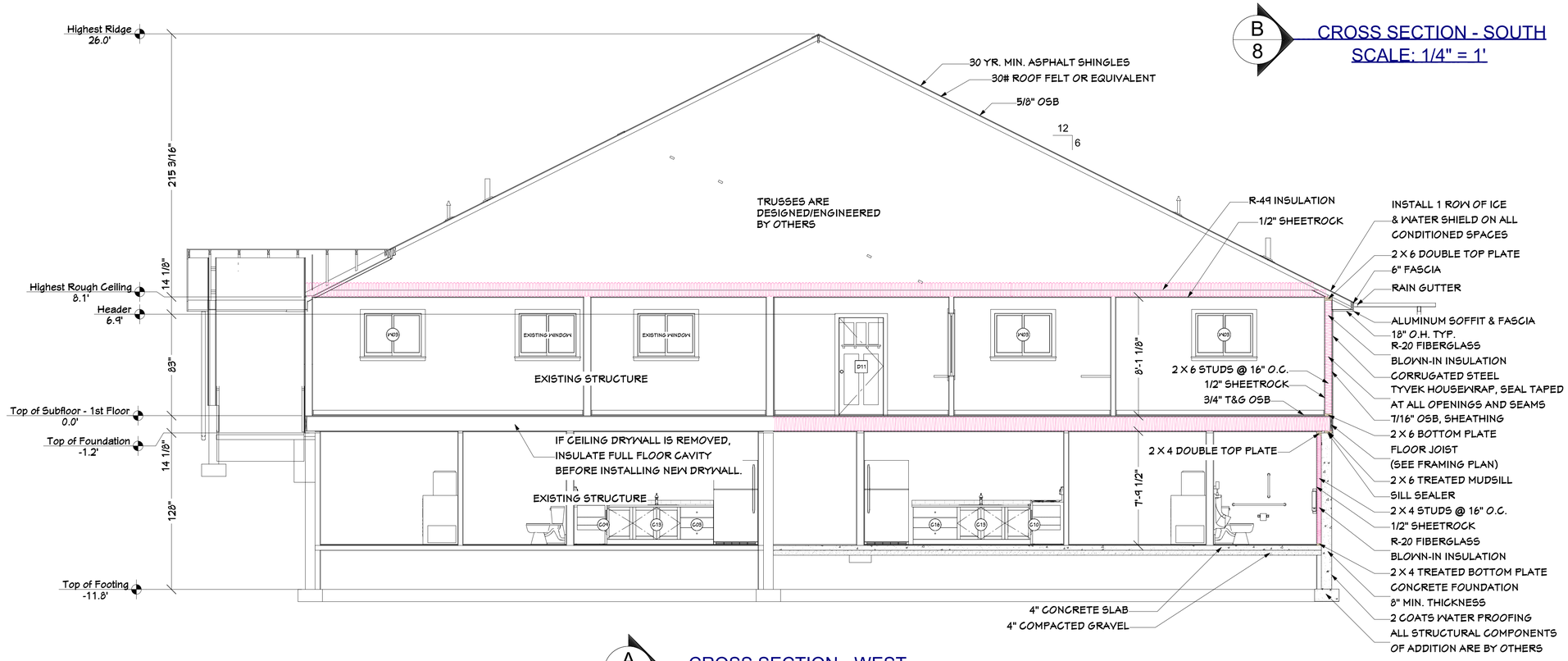

A 8 CROSS SECTION - WEST
SCALE: 1/4" = 1'

STATE OF UTAH JOSEPH T. BECK 137544 LICENSED ARCHITECT

DO NOT SCALE 11"X17" PRINTS THEY ARE NOT TO SCALE

OWNER: JAY L. BAIR
PHONE: (435)770-8636
EMAIL: jay@bairdesigns.com
WEB: bairdesigns.com
336 SUNBURST LN.
RICHMOND, UT, 84333

©

DRAWN BY: NATALIE HANSEN LLC
CHECKED BY: JAY L. BAIR

BAIRDESIGN

PROJECT FOR: CLARKSTON CITY HALL

TITLE: CROSS SECTIONS

DATE: 8/12/2022

PAGE # A6

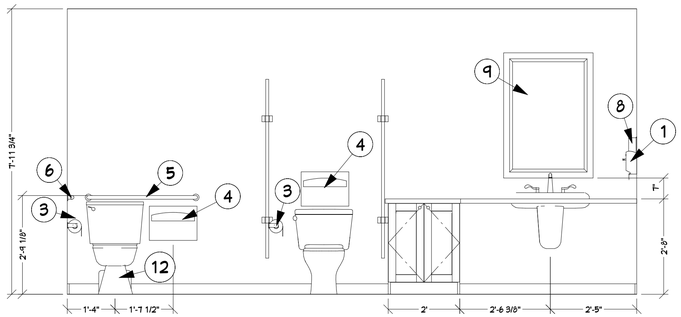

E7 WOMEN'S RESTROOM
SCALE: 1/2" = 1'

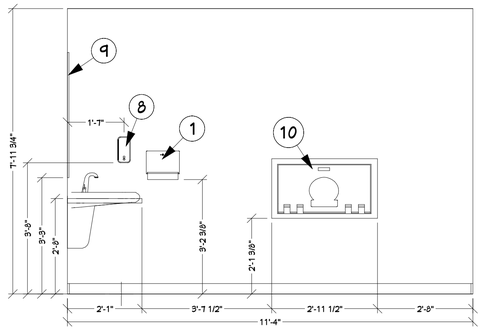

E8 WOMEN'S RESTROOM
SCALE: 1/2" = 1'

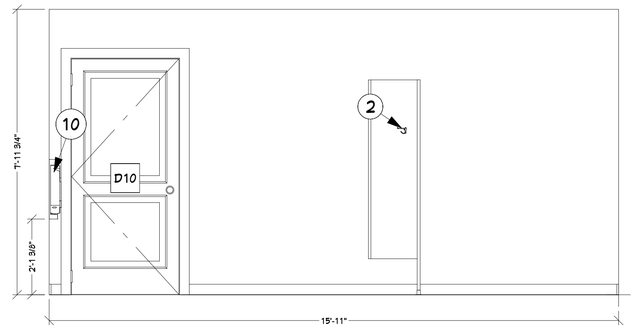

E9 WOMEN'S RESTROOM
SCALE: 1/2" = 1'

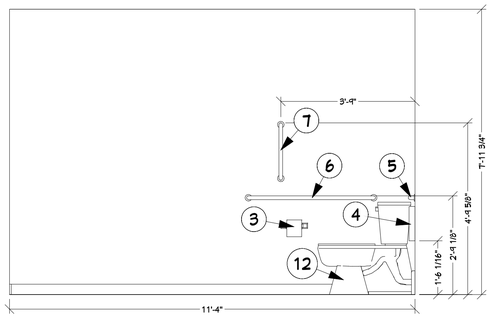

E10 WOMEN'S RESTROOM
SCALE: 1/2" = 1'

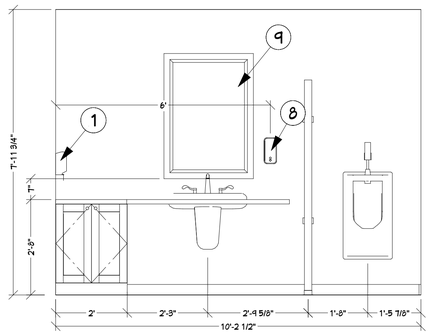

E11 MEN'S RESTROOM
SCALE: 1/2" = 1'

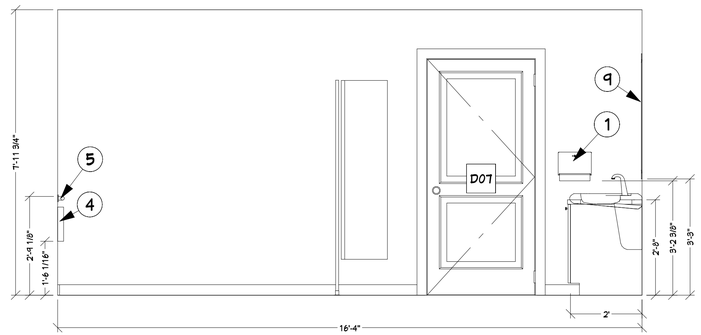

E12 MEN'S RESTROOM
SCALE: 1/2" = 1'

KEYNOTES

	ITEM	QTY.
1	PAPER TOWEL DISPENSER	QTY. 3
2	COAT HOOK	QTY. 4
3	TOILET TISSUE DISPENSER SURFACE MOUNTED	QTY. 4
4	TOILET SEAT COVER DISPENSER	QTY. 4
5	HORIZONTAL GRAB BARS- 36", MOUNTED 33"-36" FROM THE FLOOR	QTY. 3
6	HORIZONTAL GRAB BARS- 42"MOUNTED 33"-36" FROM THE FLOOR	QTY. 3
7	VERTICAL GRAB BARS- 18"	QTY. 3
8	SOAP DISPENSER	QTY. 3
9	MIRROR FULL WIDTH X3' H. X1/4" THK. CLIP MOUNTED, FRAME-LESS W/J. MOLD AT BOTTOM.	QTY. 3
10	INFANT CHANGING TABLE AMERICAN INFANT CARE PRODUCTS CORP. "DIAPER DECK" SUPPLIED BY OPERATOR	QTY. 3
11	DIAPER DISPOSAL AMERICAN INFANT CARE PRODUCTS CORP. "DIAPER DUMPER" SUPPLIED BY OPERATOR	QTY. 3
12	ADA COMPLIANT TOILET	QTY. 3
13	56" x 60" CLEAR FLOOR SPACE AT TOILET	
14	30" x 48" CLEAR FLOOR SPACE AT LAVATORY	
15	24" x 36" CLEAR FLOOR SPACE AT CHANGING TABLE	
16	60" WHEELCHAIR TURNING SPACE	
17	WALL MOUNTED 10# FIRE EXTINGUISHER, 44" TO HANDLE FROM FLOOR (MAX HEIGHT 48")	QTY. 4
18	DRINKING FOUNTAIN	QTY. 2

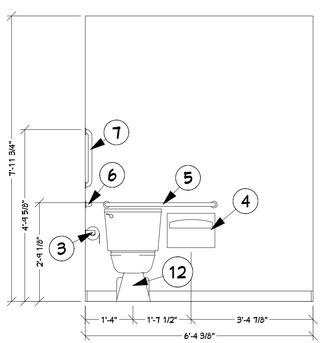

E13 MEN'S RESTROOM
SCALE: 1/2" = 1'

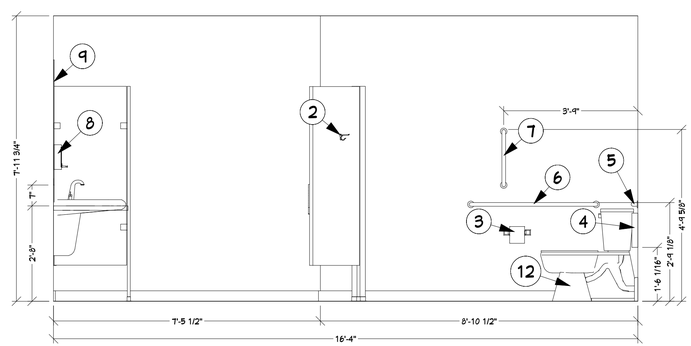

E14 MEN'S RESTROOM
SCALE: 1/2" = 1'

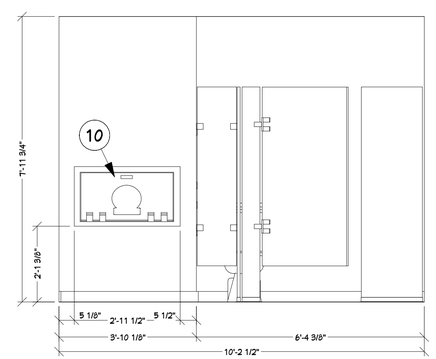

E15 MEN'S RESTROOM
SCALE: 1/2" = 1'

STATE OF UTAH
JOSEPH L. BAIR
137544
LICENSED ARCHITECT

DO NOT SCALE 11"X17" PRINTS THEY ARE NOT TO SCALE

OWNER: JAY L. BAIR
PHONE: (435)770-8636
EMAIL: jay@bairdesigns.com
WEB: bairdesigns.com
336 SUNBURST LN.
RICHMOND, UT, 84333

©

DRAWN BY: NATALIE HANSEN
LLC CHECKED BY: JAY L. BAIR

BAIRDESIGN

PROJECT FOR:
CLARKSTON CITY HALL

TITLE:
WALL ELEVATIONS

DATE:
8/12/2022

PAGE #
A7

KEYNOTES

ITEM		QTY.
1	PAPER TOWEL DISPENSER	QTY. 3
2	COAT HOOK	QTY. 4
3	TOILET TISSUE DISPENSER SURFACE MOUNTED	QTY. 4
4	TOILET SEAT COVER DISPENSER	QTY. 4
5	HORIZONTAL GRAB BARS- 36", MOUNTED 33"-36" FROM THE FLOOR	QTY. 3
6	HORIZONTAL GRAB BARS- 42"MOUNTED 33"-36" FROM THE FLOOR	QTY. 3
7	VERTICAL GRAB BARS- 18"	QTY. 3
8	SOAP DISPENSER	QTY. 3
9	MIRROR FULL WIDTH X3' H. X1/4" THK. CLIP MOUNTED, FRAME-LESS W/J. MOLD AT BOTTOM.	QTY. 3
10	INFANT CHANGING TABLE AMERICAN INFANT CARE PRODUCTS CORP. "DIAPER DECK" SUPPLIED BY OPERATOR	QTY. 3
11	DIAPER DISPOSAL AMERICAN INFANT CARE PRODUCTS CORP. "DIAPER DUMPER" SUPPLIED BY OPERATOR	QTY. 3
12	ADA COMPLIANT TOILET	QTY. 3
13	56" x 60" CLEAR FLOOR SPACE AT TOILET	
14	30" x 48" CLEAR FLOOR SPACE AT LAVATORY	
15	24" x 36" CLEAR FLOOR SPACE AT CHANGING TABLE	
16	60" WHEELCHAIR TURNING SPACE	
17	WALL MOUNTED 10# FIRE EXTINGUISHER, 44" TO HANDLE FROM FLOOR (MAX HEIGHT 48")	QTY. 4
18	DRINKING FOUNTAIN	QTY. 2

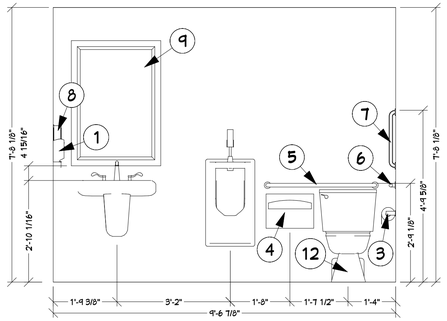

E16 CIVIC RESTROOM
SCALE: 1/2" = 1'

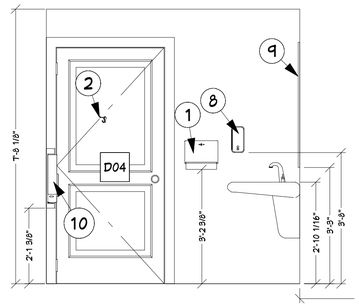

E17 CIVIC RESTROOM
SCALE: 1/2" = 1'

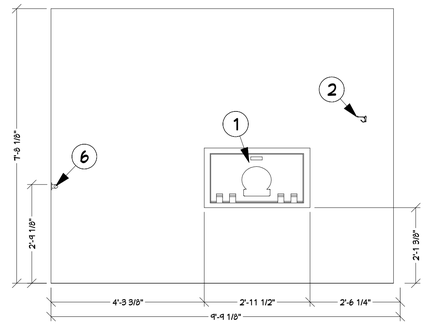

E18 CIVIC RESTROOM
SCALE: 1/2" = 1'

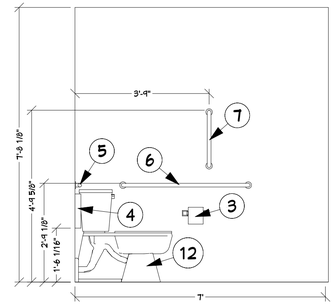

E19 CIVIC RESTROOM
SCALE: 1/2" = 1'

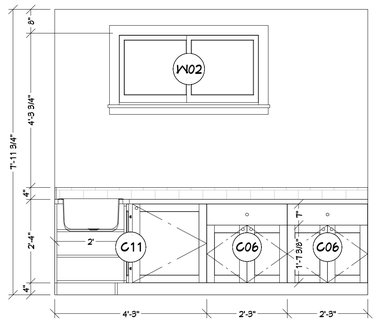

E22 MAIN FLOOR KITCHEN
SCALE: 1/2" = 1'

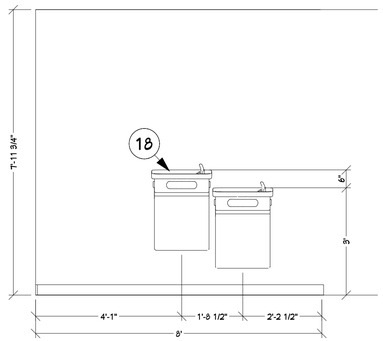

E20 DRINKING FOUNTAINS
SCALE: 1/2" = 1'

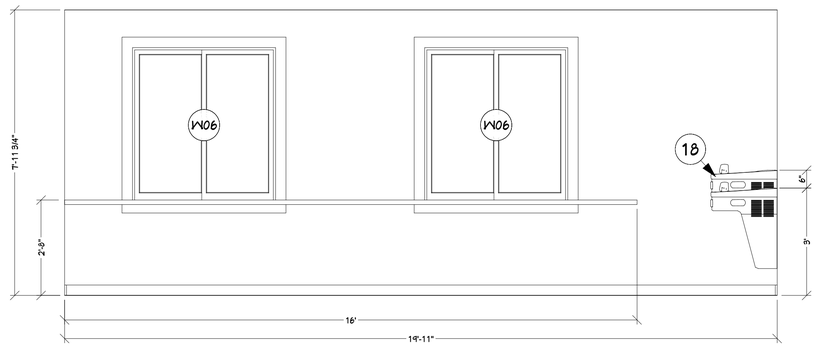

E21 FRONT COUNTER
SCALE: 1/2" = 1'

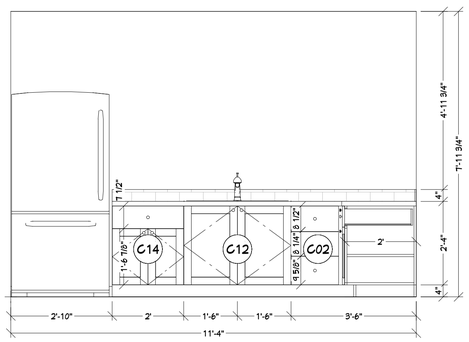

E23 MAIN FLOOR KITCHEN
SCALE: 1/2" = 1'

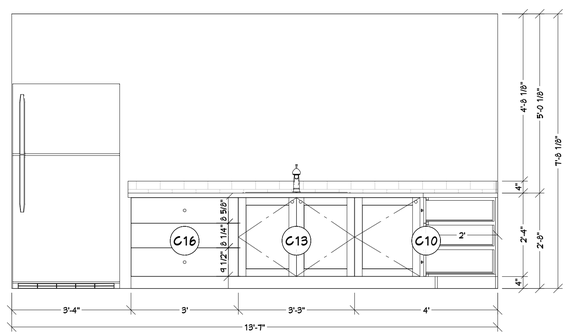

E24 CIVIC WARMING KITCHEN
SCALE: 1/2" = 1'

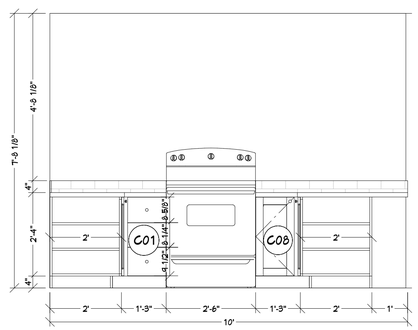

E25 CIVIC WARMING KITCHEN
SCALE 1/2" = 1'

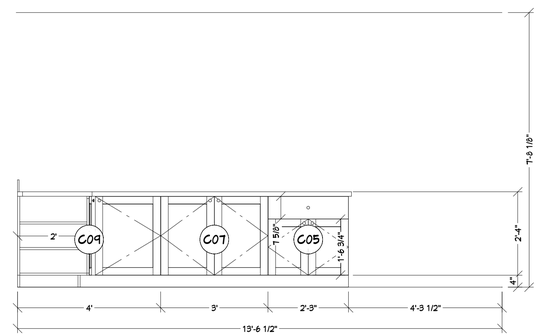

E26 CIVIC WARMING KITCHEN
SCALE 1/2" = 1'

CABINET SCHEDULE

NUMBER	LABEL	QTY	FLOOR	WIDTH	DEPTH	HEIGHT	DESCRIPTION	HINGE	DOOR PULL	DRAWER PULL
C01	3DB1532	2	0	15 "	24 "	32 "	BASE CABINET			KNOB (3)
C02	3DB1832	1	1	18 "	24 "	32 "	BASE CABINET			KNOB (3)
C03	3DB2732	1	0	27 "	24 "	32 "	BASE CABINET			KNOB (3)
C04	B2432	2	1	24 "	24 "	32 "	BASE CABINET	HIDDEN HINGE (4)	KNOB (2)	
C05	B2732	2	0	27 "	24 "	32 "	BASE CABINET	HIDDEN HINGE (4)	KNOB (2)	KNOB
C06	B2732	2	1	27 "	24 "	32 "	BASE CABINET	HIDDEN HINGE (4)	KNOB (2)	KNOB
C07	B3632	2	0	36 "	24 "	32 "	BASE CABINET	HIDDEN HINGE (4)	KNOB (2)	
C08	FHB1532L	1	0	15 "	24 "	32 "	BASE CABINET	HIDDEN HINGE (2)	KNOB	
C09	FHB4832R	2	0	48 "	24 "	32 "	BASE CABINET	HIDDEN HINGE (2)	KNOB	
C10	FHB4832L	2	0	48 "	24 "	32 "	BASE CABINET	HIDDEN HINGE (2)	KNOB	
C11	FHB5132R	1	1	51 "	24 "	32 "	BASE CABINET	HIDDEN HINGE (2)	KNOB	
C12	SB3632	1	1	36 "	24 "	32 "	BASE CABINET	HIDDEN HINGE (4)	KNOB (2)	
C13	SB3932	2	0	39 "	24 "	32 "	BASE CABINET	HIDDEN HINGE (4)	KNOB (2)	
C14	B2432	1	1	24 "	24 "	32 "	BASE CABINET	HIDDEN HINGE (4)	KNOB (2)	KNOB
C15	FHB1532R	1	0	15 "	24 "	32 "	BASE CABINET	HIDDEN HINGE (2)	KNOB	
C16	3DB3632	1	0	36 "	24 "	32 "	BASE CABINET			KNOB (3)

STATE OF UTAH
JOSEPH BACK
137544
LICENSED ARCHITECT

DO NOT SCALE 11"X17" PRINTS
THEY ARE NOT TO SCALE

OWNER: JAY L. BAIR
PHONE: (435)770-8636
EMAIL: jay@bairdesigns.com
WEB: bairdesigns.com
336 SUNBURST LN.
RICHMOND, UT, 84333

©

DRAWN BY: NATALIE HANSEN
CHECKED BY: JAY L. BAIR

BAIRDESIGN LLC

PROJECT FOR:
CLARKSTON CITY HALL

TITLE:
WALL ELEVATIONS

DATE:
8/12/2022

PAGE #
A8

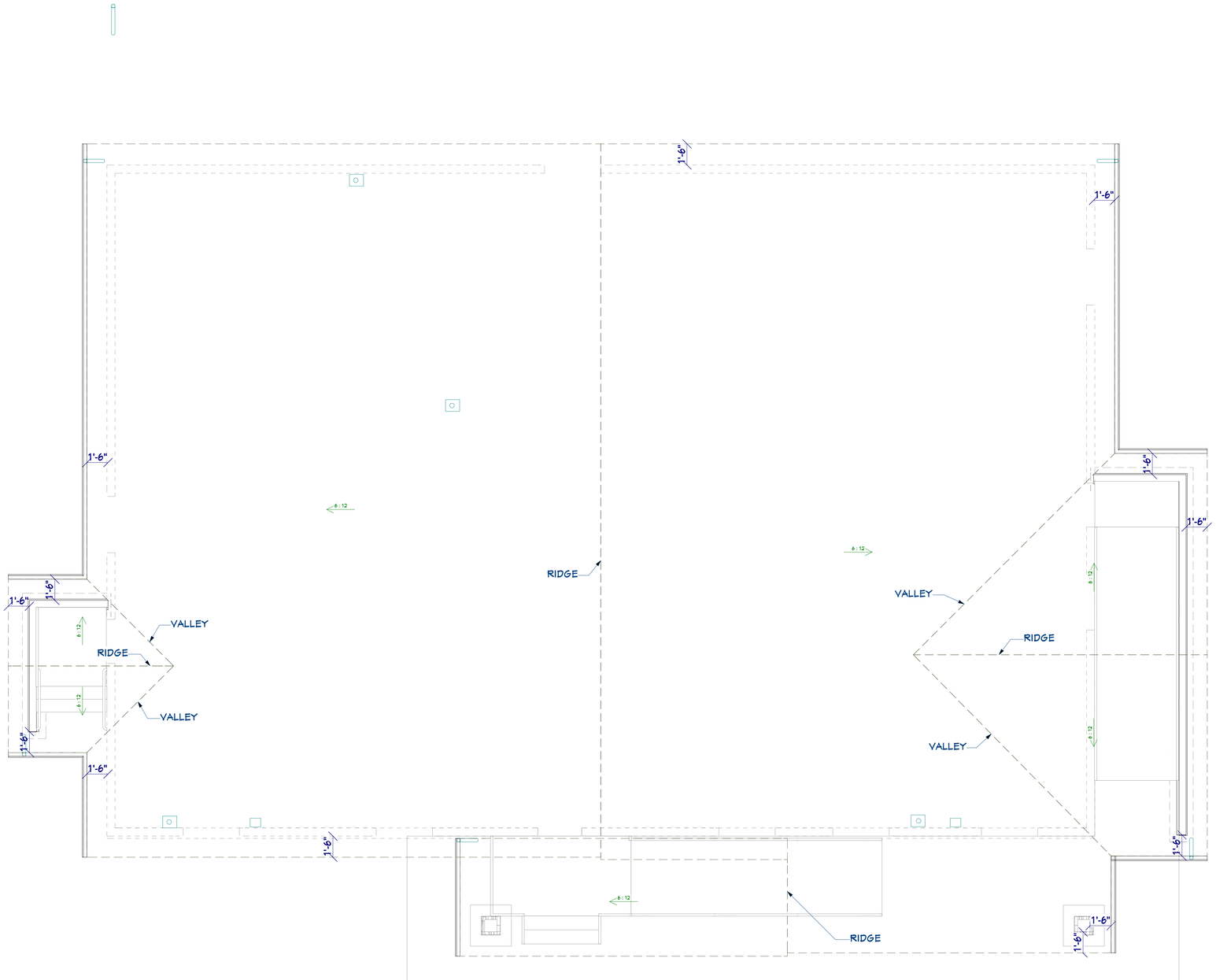

ALL EXISTING TRUSSES TO BE REMOVED & REPLACED.
TRUSSES NEED TO BE VFY BEFORE BEING BUILT/FABRICATED.

TRUSSES TO BE ENGINEERED & DESIGNED BY OTHERS

ALL VISIBLE ROOF PENETRATIONS WILL BE PAINTED TO MATCH THE ROOF.

ROOF PLAN
SCALE: 1/4" - 1'

STATE OF UTAH
JOSEPH
BACK
137544
LICENSED ARCHITECT

DO NOT SCALE 11"X17" PRINTS
THEY ARE NOT TO SCALE

OWNER: JAY L. BAIR
PHONE: (435)770-8636
EMAIL: jay@bairdesigns.com
WEB: bairdesigns.com
336 SUNBURST LN.
RICHMOND, UT, 84333

©

DRAWN BY: NATALIE HANSEN
CHECKED BY: JAY L. BAIR

BAIRDESIGN LLC

PROJECT FOR:
CLARKSTON CITY HALL

TITLE:
ROOF PLAN

DATE:
8/12/2022

PAGE #
A9

PROTECT EXISTING STORM DRAIN BOX

PROTECT EXISTING WATER LINE – WATER LINE COMES FROM FIRE STATION – NOT SURE WHERE WATER LINE ENTERS BUILDING – CONTACT BRYAN GOODSELL

PROTECT EXISTING SEPTIC TANK AND LEACH FIELD TO THE EAST

±10.04' FIELD VERIFY

SAWCUT AND REMOVE EXISTING ASPHALT PAVEMENT TO PROVIDE CLEAN EDGE FOR NEW CONSTRUCTION – PROTECT EXISTING ASPHALT TO REMAIN

PROTECT EXISTING SEPTIC SYSTEM

REMOVE EXISTING STORM DRAIN PIPING AND REUSE EXISTING 18" PIPE

EXCAVATE APPROX 350 CU YDS FOR NEW ADDITION – SEE GENERAL NOTES

EXISTING BUILDING

PROTECT EXISTING TREES

REMOVE EXISTING TREE

PROTECT / RELOCATE EXISTING IRRIGATION CONTROLLER AND PIPING AS NEEDED

RELOCATE EXISTING GAS METER – CAP / REMOVE EXISTING GAS LINE AND CONNECT IN NEW LOCATION

PROTECT / RELOCATE EXISTING ELECTRICAL METER

REMOVE EXISTING CONCRETE LANDING AND RAMP TO SIDEWALK

PROTECT EXISTING TREES

REMOVE EXISTING COLUMNS – COORDINATE W/ ARCHITECT

PROTECT EXISTING SIDEWALK DURING CONSTRUCTION

MAIN STREET

NORTH

GENERAL NOTES

1. STRIP TOPSOIL – STOCKPILE FOR RE-USE OVER FINAL GRADE
2. PLACE EXCAVATED SOILS TO NORTH OF NEW ADDITION – RE-GRADE AT A 3:1 SLOPE TO MEET EXISTING GRADE
3. ADJUST SPRINKLERS AS NEEDED (NOT SHOWN)

SCALE
0 5' 10'
HORIZ: 1" = 5' : 22 x 34
HORIZ: 1" = 10' : 11 x 17

811 Know what's **below.** **Call** before you dig. 1-800-662-4111

REV NO.	COMMENT	DATE

LICENSED PROFESSIONAL ENGINEER No. 334535 Scott A. Archibald 06/24/2022 STATE OF UTAH

SUNRISE ENGINEERING
2100 NORTH MAIN STREET
NORTH LOGAN, UTAH 84341
TEL 435.563.3734
www.sunrise-eng.com

BAIR DESIGNS

CLARKSTON CITY HALL ADDITION
DEMOLITION
SITE PLAN

SEI NO.	DESIGNED	DRAWN	CHECKED	SHEET NO.	
08733	SLA	JJ	SLA	1 of 2	SP1

P:\Joy Bair\08733 Clarkston Civic Center\DWG\Sheets\CCC-SP.dwg Jun 24, 2022 8:49am jjolley

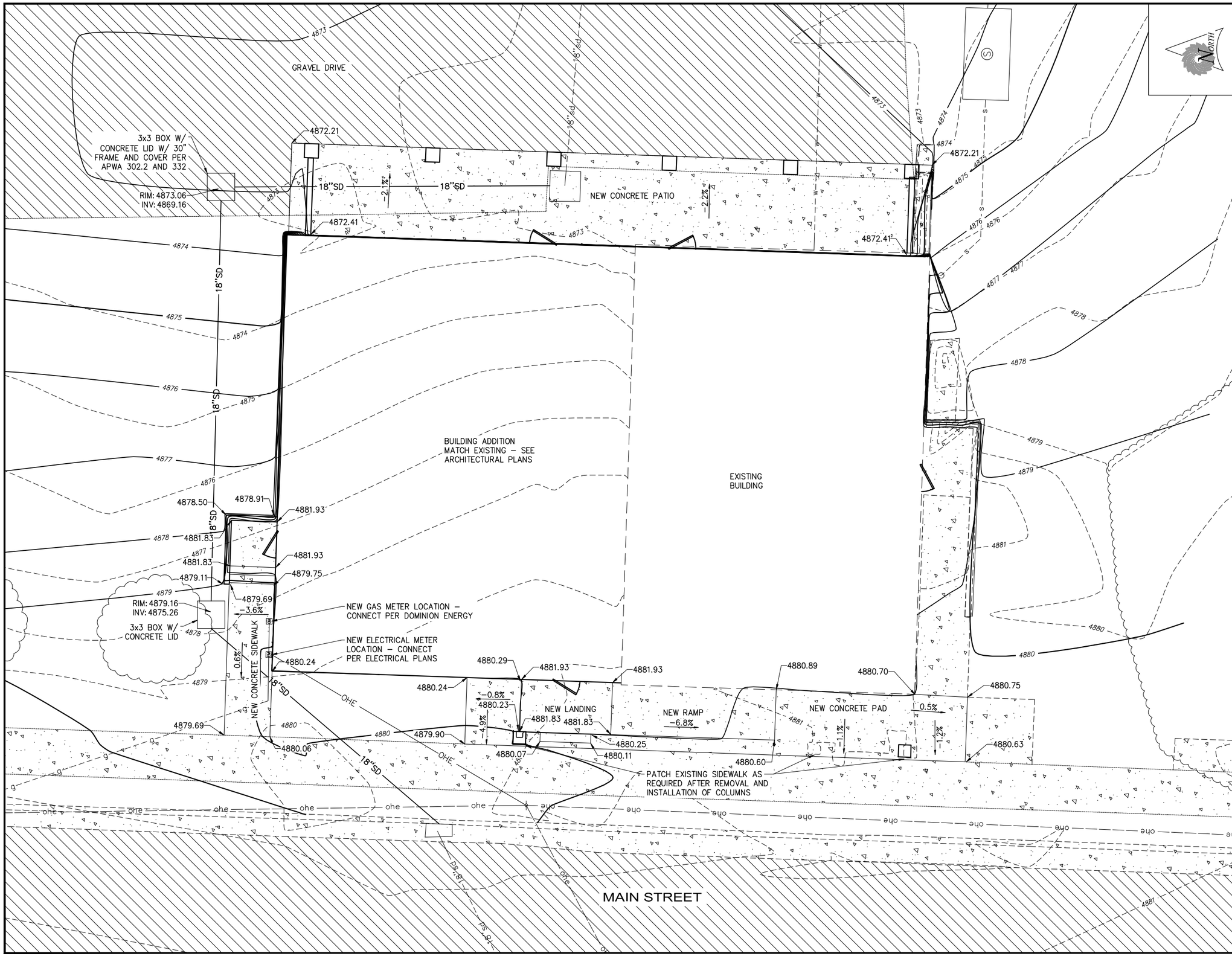

GENERAL NOTES

1. STRIP TOPSOIL – STOCKPILE FOR RE-USE OVER FINAL GRADE
2. PLACE EXCAVATED SOILS TO NORTH OF NEW ADDITION – RE-GRADE AT A 3:1 SLOPE TO MEET EXISTING GRADE
3. ADJUST SPRINKLERS AS NEEDED (NOT SHOWN)

SCALE
0 5' 10'
HORIZ: 1" = 5' : 22 x 34
HORIZ: 1" = 10' : 11 x 17

811 Know what's **below.** **Call** before you dig. 1-800-662-4111

REV NO.	COMMENT	DATE

LICENSED PROFESSIONAL ENGINEER No. 334535 Scott A. Archibald 06/24/2022 STATE OF UTAH

SUNRISE ENGINEERING
2100 NORTH MAIN STREET
NORTH LOGAN, UTAH 84341
TEL 435.563.3734
www.sunrise-eng.com

BAIR DESIGNS

CLARKSTON CITY HALL ADDITION

SITE PLAN

SEI NO.	DESIGNED	DRAWN	CHECKED	SHEET NO.	
08733	SLA	JJ	SLA	2 of 2	SP2

P:\Jay Bair\08733 Clarkston Civic Center\DWG\Sheets\CCC-SP.dwg Jun 24, 2022 8:49am jjolley

FOOTING SCHEDULE

SPEC	CONTINUOUS SECTION SIZE		REINFORCMENT	
	DEPTH	WIDTH	CONTINUOUS	TRAVERSE
FC18	10"	18"	(2) #4	NONE
FC20	10"	20"	(2) #4	NONE
SPEC	SPOT SIZE, 10" DEPTH		REINFORCMENT	
	LENGTH	WIDTH	LONGWISE	SHORTWISE
FS36	36"	36"	(4) #4	(4) #4

NOTES

1. PROVIDE REINF. STEEL 3" FROM BOTTOM OF FOOTINGS.
2. PROVIDE CONT. BENT STEEL AROUND CORNERS AND LAP WALL STEEL 24" MIN.
3. PROVIDE A 24" MIN. LAP FOR ALL STEEL.
4. FOOTINGS NEED NOT BE CONTINUOUS THRU FOUNDATION STEPS U.NO.
5. SCHEDULE SHOWN APPLICABLE TO APPLIED PLAN ONLY.
6. FOOTINGS SUPPORTING CONCRETE FOUNDATION WALLS: PROVIDE "HOOKED" VERTICAL REINFORCEMENT EMBEDDED IN FOOTING 6" AND EXTENDING OUT OF FOOTING 24" TO LAP FOUNDATION WALL REINFORCEMENT. VERTICAL EMBEDDED REINFORCEMENT TO MATCH FOUNDATION WALL VERTICAL SPACING SPECIFICATION

PIER SCHEDULE

SPEC	CONTINUOUS SECTION SIZE		REINFORCMENT	
	DIA.	SQUARE OPTION	VERTICAL	TIES
P18	18"	18" X 18" MIN.	(4) #4	#3 @ 12" O.C.

1. EMBED VERTICAL REINFORCMENT INTO PIER FOOTING 5" MIN.
2. ALL VERTICAL REINFORCMENT WITH TIES:
   TIES SHALL WRAP THE OUTSIDE OF VERTICAL REINFORCEMENT ONCE AND WITH EACH END WRAPPING WITH A 270 DEGREE BEND AND TERMINATING ON THE SAME VERTICAL BAR.

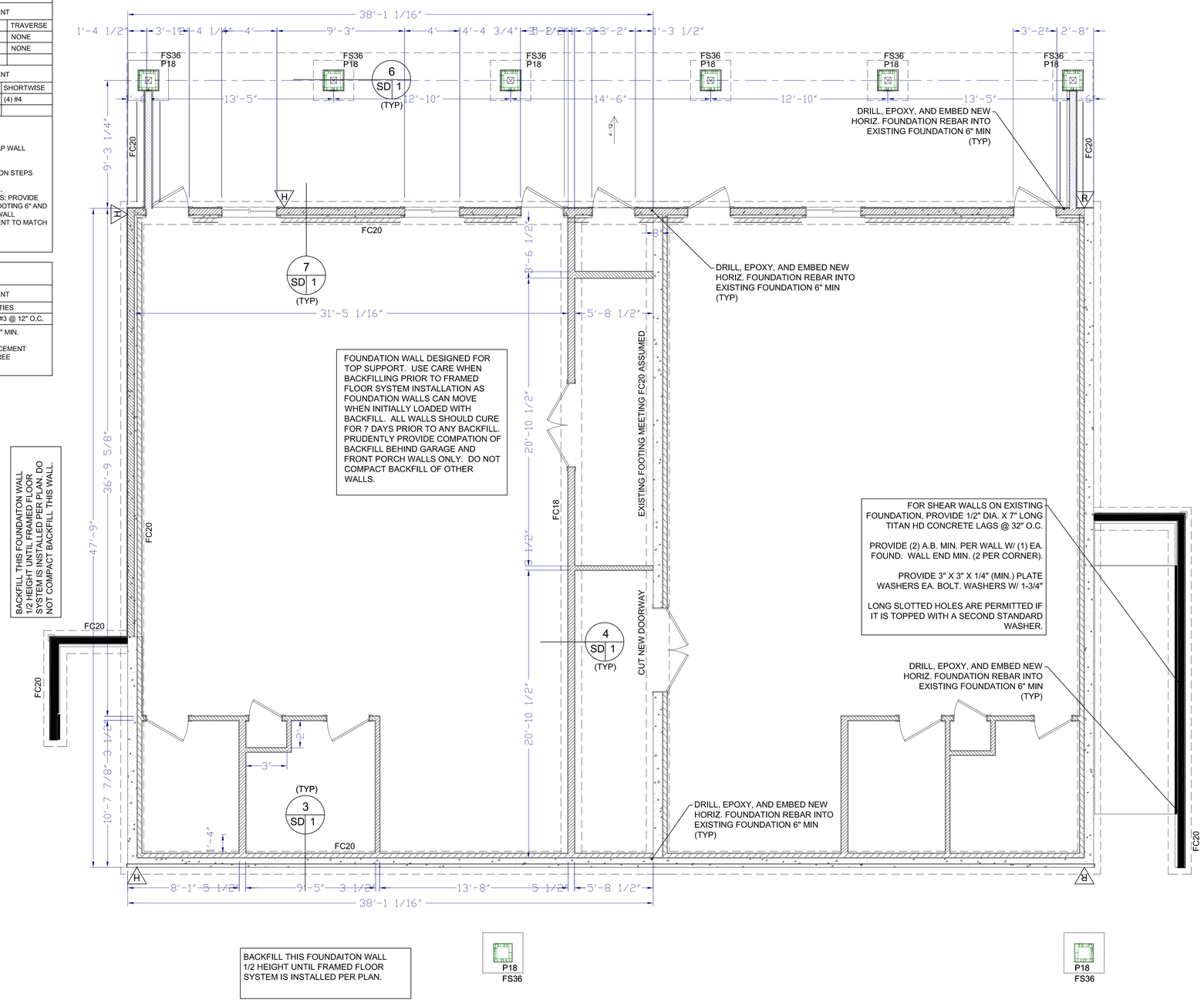

A FOUNDATION PLAN

SCALE: 1/4" = 1'-0" FOR PLANS PRINTED 24X36
1/8" = 1'-0" FOR PLANS PRINTED 11X17

PRICE ENGINEERING INC.
STRUCTURAL • CIVIL
3677 NORTH HWY 126 SUITE 4B FARR WEST, UT 84404

SEE SHEET SD3 FOR CONCRETE & REINFORCEMENT SPECIFICATIONS, AND SOIL DESIGN ASSUMPTIONS

ALL FOUNDATION WALLS ARE FND8 U.N.O.
ALL CONTINUOUS FOUNDATION WALL FOOTINGS ARE FC20 U.N.O.
ALL CONTINUOUS INTERIOR FOOTINGS ARE FC18 U.N.O.

30"	MINIMUM FROST DEPTH
6"	MINIMUM FINISH GRADE TO TOP OF FOUND.

FOUNDATION WALL SCHEDULE

SPEC	DESCRIPTION			
FND8	8" THICK CONTINUOUS (TYPICAL U.N.O.)			
HEIGHTS	REINFORCMENT (O.C.)		OPENING LINTELS	
	VERTICAL	HORIZONTAL	MAX SPAN	MIN DEPTH
2'-0"	#4 @ 32"	(2) #4	2'-0"	6"
3'-0"	#4 @ 32"	(3) #4	2'-0"	6"
4'-0"	#4 @ 24"	(4) #4	3'-0"	6"
6'-0"	#4 @ 24"	(5) #4	3'-0"	6"
8'-0"	#4 @ 24"	(6) #4	6'-0"	12"

NOTES

1. PROVIDE REINF. STEEL WITHIN 4" OF TOP & BOTTOM OF WALL AND WITHIN 2" OF OPENINGS.
2. PROVIDE (2) #4 ABOVE OPENINGS, AND (1) #4 EACH SIDE AND BELOW.
3. PROVIDE 3" OF MIN. CONC. COVER FOR ALL REINF. STEEL.
4. PROVIDE CONT. BENT STEEL AROUND CORNERS AND LAP WALL STEEL PER SCHEDULE (#4 - 18" MIN, #5 - 20" MIN.)
5. PROVIDE A 24" MIN. LAP FOR ANY STEEL IF NOT NOTED.
6. ALL STEEL IS CENTERED WITHIN THE WALL THICKNESS U.N.O. OR ON DETAILING
7. EMBEDDED PIPES SHOULD HAVE A MAX. DIA. OF 2-1/2"
8. DO NOT BACKFILL FOUNDATION WALL UNTIL CONC. FLOOR SLAB IS IN PLACE AND CURED FOR 7 OR MORE DAYS.
9. SCHEDULE SHOWN APPLICABLE TO APPLIED PLAN ONLY.

ANCHOR BOLTS & HOLDOWNS

ANCHOR BOLTS U.N.O:

1/2" DIA. X 10" L A307 "J" BOLTS @ 32" O.C. U.N.O.
PROVIDE AN EMBEDMENT OF 7"
PROVIDE (2) A.B. MIN. PER WALL W/ (1) EA. FOUND.
WALL END MIN. (2 PER CORNER).
PROVIDE 3" X 3" X 1/4" (MIN.) PLATE WASHERS EA. BOLT.
WASHERS W/ 1-3/4" LONG SLOTTED HOLES ARE PERMITTED
IF IT IS TOPPED WITH A SECOND STANDARD WASHER.

HOLDOWN CAST IN STRAPS OR POST INSTALLED TIES:

H — SIMPSON #STHD10(RJ) CAST IN PLACE. (3 TYP.)

R — EXISTING HOLD DOWN OR SIMPSON #HTT5 W/ 5/8" DIA THREADED ROD EMBEDDED & EPOXIED 16" DEEP INTO TOP OF CONCRETE FOUNDATION AND WITHIN 6" OF A VERTICAL FOUNDATION #4 REBAR. PROVIDE SIMPSON SET-XP EPOXY. PROVIDE (2) 2X4 MINIMUM TIE POST.

PROJECT TITLE:
Bair Design Clarkston Town Hall Addition
25 South Main Street
Clarkston, Utah

MARK	DESCRIPTION	DATE
	DESIGN SET	03/15/2022

DESIGNED BY:
JACKSON SAGERS 385-329-1033
JACKSON@PRICE-ENGINEERING.COM

CHECKED BY:
KYLE PRICE 801-791-6274
KYLE@PRICE-ENGINEERING.COM

LICENSED STRUCTURAL ENGINEER NO. 362266 KYLE RUSSELL PRICE STATE OF UTAH
08/12/2022

SHEET TITLE:
FOUNDATION PLAN

S1.0

C:\Users\Travis\Box\Price Engineering\Current Projects\Bair Design\Bair Design Clarkston Town Hall Addition\Revision 08_12_22\Eng Plans Bair Design Clarkston Town Hall Addition.dwg Aug 12, 2022 4:06pm

SEE SHEET SD3 FOR WOOD FRAMING SPECS AND NOTES.

SW#: SHEAR WALL. SEE SHEET SD3.

IN-WALL BEAM SUPPORT

DESIGNATION (SEE PLAN)	SUPPORT OR TRIMMER QUANTITY & SIZE (1)(2)(3)	
(2)2X4	(2) 2X4 STUDS	
(3)2X4	(3) 2X4 STUDS	
(4)2X4	(4) 2X4 STUDS	
(5)2X4	(5) 2X4 STUDS	
(6)2X4	(6) 2X4 STUDS	
(2)2X6	(2) 2X6 STUDS	
(3)2X6	(3) 2X6 STUDS	
(4)2X6	(4) 2X6 STUDS	
(5)2X6	(5) 2X6 STUDS	
(6)2X6	(6) 2X6 STUDS	

1. ALL STUDS ARE DOUG FIR OR HEM FIR (WHITE PINE) STUD GRADE OR BTR
2. FASTEN EACH STUD TOGETHER WITH 16D @ 16" MINIMUM ON CENTER STAGGERED.
3. (1) SINGLE 2X CONTINUOUS TOP AND BOTTOM PLATE ASSUMED MINIMUM .

S — VERTICAL FRAMING STRAP. LOWER STUDS OR FLOOR BEAM OR CANTILEVERED RIM TO UPPER STUDS. SIMPSON #CS16 COIL W/ 16" LAP. (2 TYP.)

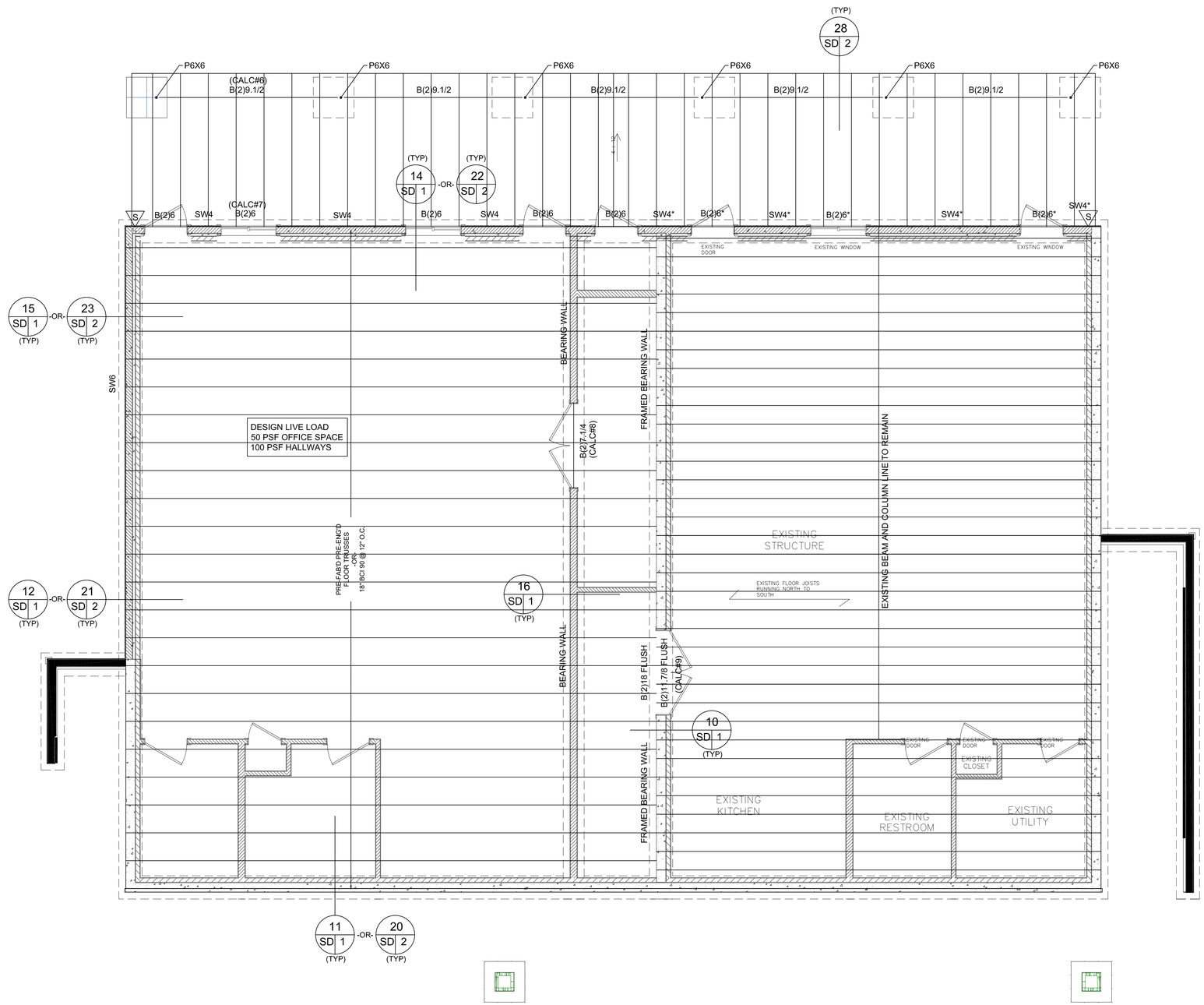

SW6*

EXISTING SHEAR WALL -OR- CONVERSION OF EXISTING WALL TO SHEAR WALL:

FOR EXISTING WALLS, STRIP WALL TO STUDS (1) SIDE. COVER WITH 7/16 OSB (IF NOT EXISTING) AND FOLLOW SW6 FASTENING SPECS. OVERLAP OSB OVER TOP AND BOTTOM PLATES AND RIM BOARDS AS APPLICABLE. TRIM FOR EXIST. ELECTRICAL & UTILITIES.

IF NO ANCHOR BOLTS ARE PRESENT, FASTEN EXISTING BOTTOM PLATE TO FOUNDATION W/

A) 1/2" DIA. X 8" SIMPSON TITAN HD CONC. LAG @ 32" O.C. W/ 3X3X1/4 SLOTTED PLATE WASHERS. -OR-
B) #UFP -OR- #FAP PLATES @ 48" O.C. ON EXTERIOR OR INSIDE OF FOUNDATION WALL.

B FIRST FLOOR FRAMING PLAN

SCALE: 1/4" = 1'-0" FOR PLANS PRINTED 24X36
1/8" = 1'-0" FOR PLANS PRINTED 11X17

PRICE ENGINEERING INC.
STRUCTURAL • CIVIL
3677 NORTH HWY 126 SUITE 4B FARR WEST, UT 84404

BEAM SCHEDULE EX

SEE NOTES 1,2,3,4,5

DESIGNATION (SEE PLAN)	BEAM DESCRIPTION	END TRIMMER QTY. U.N.O.	TYPE U.N.O.
MIN. BEAM OR HEADER U.N.O.	(2) 2 X 10 DF#2	1	2X4
B(2)5.1/2	(2) 1-3/4" X 5-1/2" LVL	1	2X4
B(2)6	(2) 2 X 6 DF/HF#2	1	2X4
B(2)7.1/4	(2) 1-3/4" X 7-1/4" LVL	1	2X4
B(3)7.1/4	(3) 1-3/4" X 7-1/4" LVL	1	2X4
B(2)8	(2) 2 X 8 DF/HF#2	1	2X4
B(3)8	(3) 2 X 8 DF/HF#2	1	2X6
B(2)9.1/2	(2) 1-3/4" X 9-1/2" LVL	3	2X4
B(2)9.1/2	(2) 1-3/4" X 9-1/2" LVL	2	2X6
B(3)9.1/2	(3) 1-3/4" X 9-1/2" LVL	3	2X6
B(2)10	(2) 2X10" DF/HF #2	1	2X4
B(3)10	(3) 2 X 10 DF/HF#2	1	2X4
B(1)11.7/8	(1) 1-3/4" X 11-7/8" LVL	2	2X4
B(2)11.7/8	(2) 1-3/4" X 11-7/8" LVL	3	2X4
B(3)11.7/8	(3) 1-3/4" X 11-7/8" LVL	4	2X6
B(4)11.7/8	(4) 1-3/4" X 11-7/8" LVL	5	2X6
B(2)12	(2) 2 X 12 DF/HF#2	1	2X4
B(2)14	(2) 1-3/4" X 14" LVL	4	2X4
B(3)14	(3) 1-3/4" X 14" LVL	4	2X6
B(2)16	(2) 1-3/4" X 16" LVL	4	2X4
B(3)16	(3) 1-3/4" X 16" LVL	5	2X6
B(2)18	(2) 1-3/4" X 18" LVL	5	2X4
B(3)18	(3) 1-3/4" X 18" LVL	5	2X6
GLB	WOOD GLULAM BEAM.	SEE PLAN	
W#X##	STEEL WIDE FLANGE BEAM	SEE PLAN	

1. JOIN MULTIPLE PIECE BEAMS W/ (2) 16D @ 12" O.C.
2. PROVIDE METAL FRAMING CONNECTORS (I.E. SIMPSON #CB) TO TIE BEAMS GREATER THAN 6'-0" TO POSTS OR TRIMMERS.
3. LVL IS LAMINATED VENEER LUMBER, I.E., MICROLAM, VERSALAM. MIINIMUM LVL SPEC PROVIDE 1.9E AND 2600 PSI F'b OR BTR.
4. GLB IS GLULAM BEAM. PROVIDE 24F-V4 SPEC U.N.O.
5. ALL STEEL BEAMS TO MEET ASTM A992 OR Fy = 50 ksi, Fu = 65 ksi CRITERIA.
6. X-BEAM IS ROSBORO X-BEAM BRAND GLULAM BEAMS OR EQUIV.

7. ALL BEAMS AND HEADERS MAY HAVE UP TO A 1-1/2" DIAMETER HOLE THRU THE ANY LOCATION OF THE SPAN, BUT NOT WITHIN 1" OF THE TOP OF BOTTOM OF THE DEPTH.

POST & COLUMN SCHEDULE

DESIGNATION (SEE PLAN)	DRESSED SECTION SIZE (APPROX) & GRADE (1)	CAP/BASE U.N.O. (2)	BASE TO CONC. U.N.O. (2)
P4X4	3-1/2" X 3-1/2" DF#1	BC4, LCE4	ABU44Z
P4X6	3-1/2" X 5-1/2" DF#1	BC46, LCE4	ABU46Z
P6X6	5-1/2" X 5-1/2" DF#1	BC6, AC6	ABU66Z
P6X8	5-1/2" X 7-1/2" DF#1	BC_, AC6	SEE PLAN
P8X8	7-1/2" X 7-1/2" DF#1	BC_, AC6	ABU88Z
P10X10	9-1/2" X 9-1/2" DF#1	SEE PLAN	ABU1010Z
P12X12	11-1/2" X 11-1/2" DF#1	SEE PLAN	ABU1212Z
P6X6RS	6" X 6" DF#1	AC6	ABU66RZ
P8X8RS	8" X 8" DF#1	SEE PLAN	ABU88RZ
P10X10RS	10" X 10" DF#1	SEE PLAN	ABU1010RZ
P12X12RS	12" X 12" DF#1	SEE PLAN	ABU1212RZ

1. DF#1 = DOUG FIR GRADE #1 OR BETTER
2. CONNECTOR MODEL NUMBERS RELATE TO SIMPSON STRONG TIE OR USP (MITEK) BRAND WHERE APPLICABLE. OTHER CONNECTOR MODEL NUMBERS ACCEPTABLE IF ALL RATED CAPACITIES EXCEED THOSE LISTED. (LCE_) & (AC_) MODELS ARE INSTALLED IN PAIRS. U.N.O. = UNLESS NOTED OTHERWISE (ON THE PLANS).

PROJECT TITLE:
Bair Design Clarkston Town Hall Addition
25 South Main Street
Clarkston, Utah

MARK	DESCRIPTION	DATE
	DESIGN SET	03/15/2022

DESIGNED BY:
JACKSON SAGERS 385-329-1033
JACKSON@PRICE-ENGINEERING.COM

CHECKED BY:
KYLE PRICE 801-791-6274
KYLE@PRICE-ENGINEERING.COM

LICENSED STRUCTURAL ENGINEER NO. 362226 KYLE RUSSELL PRICE STATE OF UTAH
08/12/2022

SHEET TITLE:
FIRST FLOOR FRAMING PLAN

S1.1

C:\Users\DellUser\Box\Price Engineering\Current Projects\Bair Design\Bair Design Clarkston Town Hall Addition\Revision 08_12_22\Eng Plans Bair Design Clarkston Town Hall Addition.dwg Aug 12, 2022 3:32pm

SEE SHEET SD3 FOR WOOD FRAMING SPECS AND NOTES.

SW#: SHEAR WALL. SEE SHEET SD3.

IN-WALL BEAM SUPPORT

DESIGNATION (SEE PLAN)	SUPPORT OR TRIMMER QUANTITY & SIZE (1)(2)(3)	
(2)2X4	(2) 2X4 STUDS	
(3)2X4	(3) 2X4 STUDS	
(4)2X4	(4) 2X4 STUDS	
(5)2X4	(5) 2X4 STUDS	
(6)2X4	(6) 2X4 STUDS	
(2)2X6	(2) 2X6 STUDS	
(3)2X6	(3) 2X6 STUDS	
(4)2X6	(4) 2X6 STUDS	
(5)2X6	(5) 2X6 STUDS	
(6)2X6	(6) 2X6 STUDS	

1. ALL STUDS ARE DOUG FIR OR HEM FIR (WHITE PINE) STUD GRADE OR BTR
2. FASTEN EACH STUD TOGETHER WITH 16D @ 16" MINIMUM ON CENTER STAGGERED.
3. (1) SINGLE 2X CONTINUOUS TOP AND BOTTOM PLATE ASSUMED MINIMUM .

S VERTICAL FRAMING STRAP.
LOWER BEAM END TO UPPER TRUSS END.
SIMPSON CS16 COIL W/ 9" LAP.
(4 TYP.)

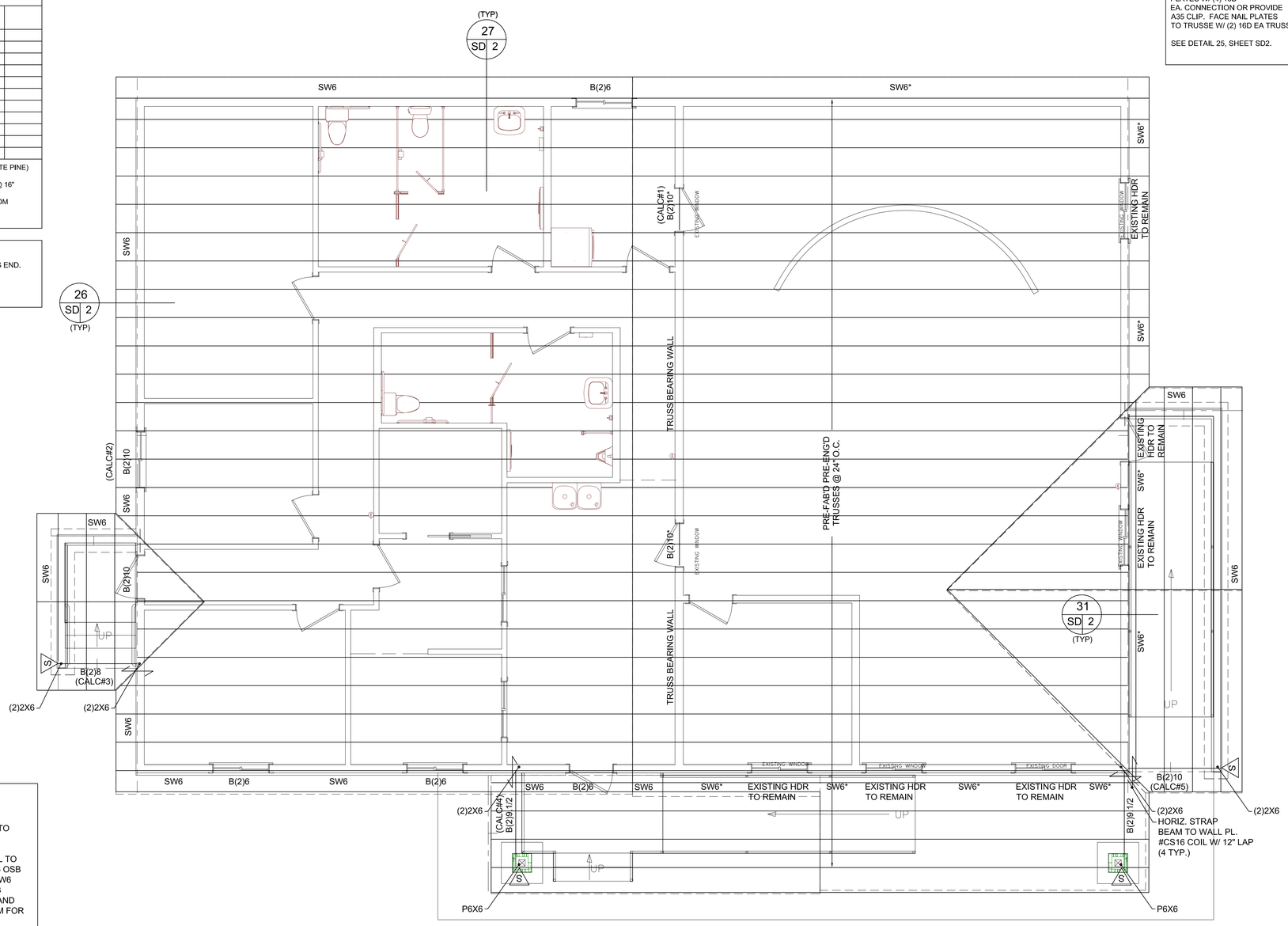

SW6*

EXISTING SHEAR WALL -OR-
CONVERSION OF EXISTING WALL TO SHEAR WALL:

FOR EXISTING WALLS, STRIP WALL TO STUDS (1) SIDE. COVER WITH 7/16 OSB (IF NOT EXISTING) AND FOLLOW SW6 FASTENING SPECS. OVERLAP OSB OVER TOP AND BOTTOM PLATES AND RIM BOARDS AS APPLICABLE. TRIM FOR EXIST. ELECTRICAL & UTILITIES.

IF NO ANCHOR BOLTS ARE PRESENT, FASTEN EXISTING BOTTOM PLATE TO FOUNDATION W/

A) 1/2" DIA. X 8" SIMPSON TITAN HD CONC. LAG @ 32" O.C. W/ 3X3X1/4 SLOTTED PLATE WASHERS. -OR-
B) #UFP -OR- #FAP PLATES @ 48" O.C. ON EXTERIOR OR INSIDE OF FOUNDATION WALL.

OVERBUILD FRAMING:

SHELL:
2X4 @ 24" O.C. (MIN.)
SHELL VERT SUPPORT:
2X4 @ 48" O.C. (MIN.)
VERT PLATES:
2X6 ACROSS TRUSSES.

FACE NAIL VERT ALONG SIDE SHELL & PLATES W/ (4) 16D
EA. CONNECTION OR PROVIDE A35 CLIP. FACE NAIL PLATES TO TRUSSE W/ (2) 16D EA TRUSS MIN.

SEE DETAIL 25, SHEET SD2.

PRICE ENGINEERING INC.
STRUCTURAL • CIVIL
3677 NORTH HWY 126 SUITE 4B FARR WEST, UT 84404

BEAM SCHEDULE EX

SEE NOTES 1,2,3,4,5

DESIGNATION (SEE PLAN)	BEAM DESCRIPTION	END TRIMMER QTY. U.N.O.	TYPE U.N.O.
MIN. BEAM OR HEADER U.N.O.	(2) 2 X 10 DF#2	1	2X4
B(2)5.1/2	(2) 1-3/4" X 5-1/2" LVL	1	2X4
B(2)6	(2) 2 X 6 DF/HF#2	1	2X4
B(2)7.1/4	(2) 1-3/4" X 7-1/4" LVL	1	2X4
B(3)7.1/4	(3) 1-3/4" X 7-1/4" LVL	1	2X4
B(2)8	(2) 2 X 8 DF/HF#2	1	2X4
B(3)8	(3) 2 X 8 DF/HF#2	1	2X6
B(2)9.1/2	(2) 1-3/4" X 9-1/2" LVL	3	2X4
B(2)9.1/2	(2) 1-3/4" X 9-1/2" LVL	2	2X6
B(3)9.1/2	(3) 1-3/4" X 9-1/2" LVL	3	2X6
B(2)10	(2) 2X10" DF/HF #2	1	2X4
B(3)10	(3) 2 X 10 DF/HF#2	1	2X4
B(1)11.7/8	(1) 1-3/4" X 11-7/8" LVL	2	2X4
B(2)11.7/8	(2) 1-3/4" X 11-7/8" LVL	3	2X4
B(3)11.7/8	(3) 1-3/4" X 11-7/8" LVL	4	2X6
B(4)11.7/8	(4) 1-3/4" X 11-7/8" LVL	5	2X6
B(2)12	(2) 2 X 12 DF/HF#2	1	2X4
B(2)14	(2) 1-3/4" X 14" LVL	4	2X4
B(3)14	(3) 1-3/4" X 14" LVL	4	2X6
B(2)16	(2) 1-3/4" X 16" LVL	4	2X4
B(3)16	(3) 1-3/4" X 16" LVL	5	2X6
B(2)18	(2) 1-3/4" X 18" LVL	5	2X4
B(3)18	(3) 1-3/4" X 18" LVL	5	2X6
GLB	WOOD GLULAM BEAM.	SEE PLAN	
W#X##	STEEL WIDE FLANGE BEAM	SEE PLAN	

1. JOIN MULTIPLE PIECE BEAMS W/ (2) 16D @ 12" O.C.
2. PROVIDE METAL FRAMING CONNECTORS (I.E. SIMPSON #CB) TO TIE BEAMS GREATER THAN 6'-0" TO POSTS OR TRIMMERS.
3. LVL IS LAMINATED VENEER LUMBER, I.E., MICROLAM, VERSALAM. MIINIMUM LVL SPEC PROVIDE 1.9E AND 2600 PSI F'b OR BTR.
4. GLB IS GLULAM BEAM. PROVIDE 24F-V4 SPEC U.N.O.
5. ALL STEEL BEAMS TO MEET ASTM A992 OR Fy = 50 ksi, Fu = 65 ksi CRITERIA.
6. X-BEAM IS ROSBORO X-BEAM BRAND GLULAM BEAMS OR EQUIV.

7. ALL BEAMS AND HEADERS MAY HAVE UP TO A 1-1/2" DIAMETER HOLE THRU THE ANY LOCATION OF THE SPAN, BUT NOT WITHIN 1" OF THE TOP OF BOTTOM OF THE DEPTH.

POST & COLUMN SCHEDULE

DESIGNATION (SEE PLAN)	DRESSED SECTION SIZE (APPROX) & GRADE (1)	CAP/BASE U.N.O.(2)	BASE TO CONC. U.N.O. (3)
P4X4	3-1/2" X 3-1/2" DF#1	BC4, LCE4	ABU44Z
P4X6	3-1/2" X 5-1/2" DF#1	BC46, LCE4	ABU46Z
P6X6	5-1/2" X 5-1/2" DF#1	BC6, AC6	ABU66Z
P6X8	5-1/2" X 7-1/2" DF#1	BC_, AC6	SEE PLAN
P8X8	7-1/2" X 7-1/2" DF#1	BC_, AC6	ABU88Z
P10X10	9-1/2" X 9-1/2" DF#1	SEE PLAN	ABU1010Z
P12X12	11-1/2" X 11-1/2" DF#1	SEE PLAN	ABU1212Z
P6X6RS	6" X 6" DF#1	AC6	ABU66RZ
P8X8RS	8" X 8" DF#1	SEE PLAN	ABU88RZ
P10X10RS	10" X 10" DF#1	SEE PLAN	ABU1010RZ
P12X12RS	12" X 12" DF#1	SEE PLAN	ABU1212RZ

1. DF#1 = DOUG FIR GRADE #1 OR BETTER
2. CONNECTOR MODEL NUMBERS RELATE TO SIMPSON STRONG TIE OR USP (MITEK) BRAND WHERE APPLICABLE. OTHER CONNECTOR MODEL NUMBERS ACCEPTABLE IF ALL RATED CAPACITIES EXCEED THOSE LISTED. (LCE_) & (AC_) MODELS ARE INSTALLED IN PAIRS.
U.N.O. = UNLESS NOTED OTHERWISE (ON THE PLANS).

PROJECT TITLE:
Bair Design Clarkston Town Hall Addition
25 South Main Street
Clarkston, Utah

MARK	DESCRIPTION	DATE
	DESIGN SET	03/15/2022

DESIGNED BY:
JACKSON SAGERS 385-329-1033
JACKSON@PRICE-ENGINEERING.COM

CHECKED BY:
KYLE PRICE 801-791-6274
KYLE@PRICE-ENGINEERING.COM

LICENSED STRUCTURAL ENGINEER
NO. 362288
KYLE RUSSELL PRICE
STATE OF UTAH
08/12/2022

SHEET TITLE:
ROOF FRAMING PLAN

S1.2

C

ROOF FRAMING PLAN

SCALE: 1/4" = 1'-0" FOR PLANS PRINTED 24X36
1/8" = 1'-0" FOR PLANS PRINTED 11X17

C:\Users\DellUserBox\Price Engineering\Current Projects\Bair Design\Bair Design Clarkston Town Hall Addition\Revision 08_12_22\Eng Plans Bair Design Clarkston Town Hall Addition.dwg Aug 12, 2022 2:51pm

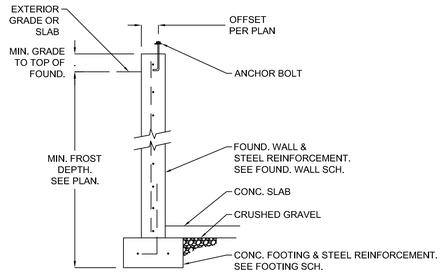

3 FOUNDATION WALL
NTS

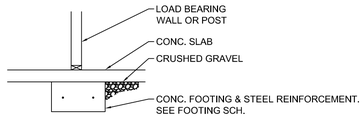

4 INTERIOR FOOTING
NTS

1 NO DETAIL
NTS

2 NO DETAIL
NTS

5 NO DETAIL
NTS

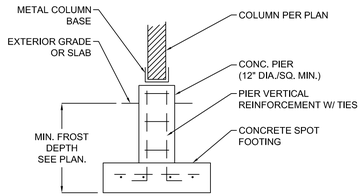

6 SPOT FOOTING & PIER
NTS

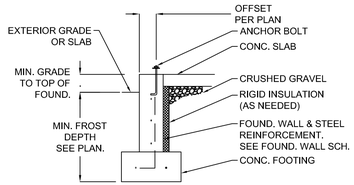

7 FOUNDATION WALL
NTS

8 NO DETAIL
NTS

9 NO DETAIL
NTS

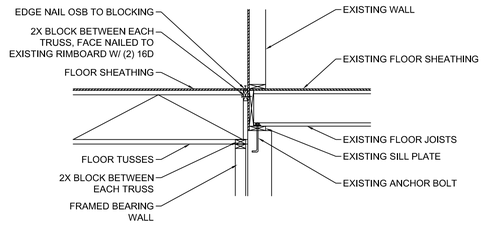

10 FOUND. TO FLOOR
NTS

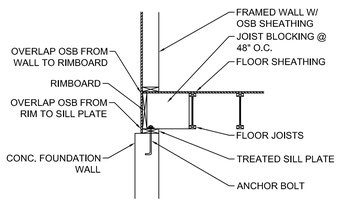

11 FOUND. TO FLOOR
NTS

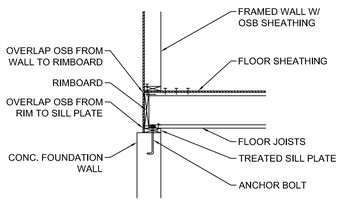

12 FOUND. TO FLOOR
NTS

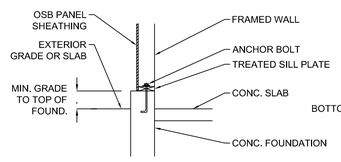

13 FOUND. TO WALL
NTS

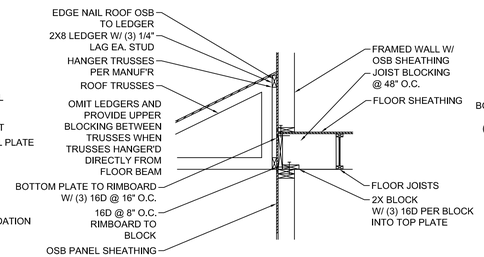

14 WALL TO FLOOR TO WALL
NTS

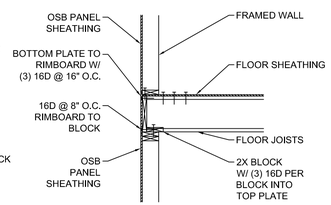

15 WALL TO FLOOR TO WALL
NTS

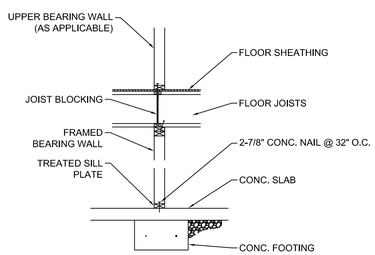

16 INTERIOR BEARING WALL
NTS

17 NO DETAIL
NTS

18 NO DETAIL
NTS

19 NO DETAIL
NTS

PRICE ENGINEERING INC.
STRUCTURAL • CIVIL
3677 NORTH HWY 126 SUITE 4B FARR WEST, UT 84404

PROJECT TITLE:
Bair Design Clarkston Town Hall Addition
25 South Main Street
Clarkston, Utah

MARK	DESCRIPTION	DATE
	DESIGN SET	03/15/2022

DESIGNED BY:
JACKSON SAGERS 385-329-1033
JACKSON@PRICE-ENGINEERING.COM

CHECKED BY:
KYLE PRICE 801-791-6274
KYLE@PRICE-ENGINEERING.COM

LICENSED STRUCTURAL ENGINEER NO. 362266 KYLE RUSSELL PRICE STATE OF UTAH
08/12/2022

SHEET TITLE:
STRUCTURAL DETAILS

SD1

C:\Users\DellUser\Box\Price Engineering\Current Projects\Bair Design\Bair Design Clarkston Town Hall Addition\Revision 08_12_22\Eng Plans Bair Design Clarkston Town Hall Addition.dwg Aug 12, 2022 2:52pm

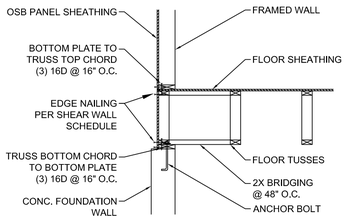

20 FOUND. TO FLOOR

NTS

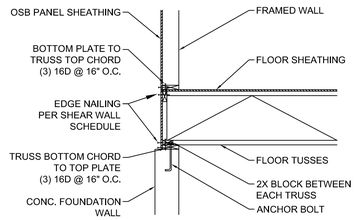

21 FOUND. TO FLOOR

NTS

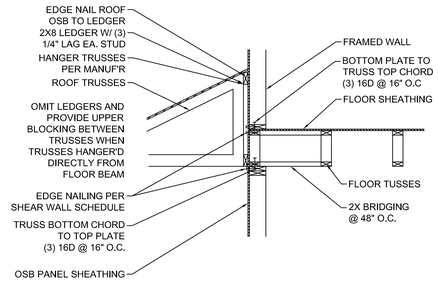

22 WALL TO FLOOR TO WALL

NTS

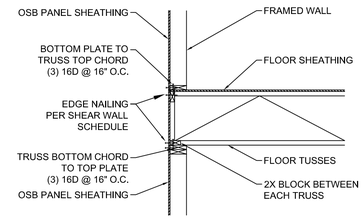

23 WALL TO TRUSS

NTS

24 NO DETAIL

NTS

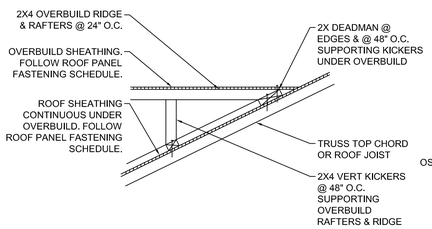

25 ROOF OVERBUILD

NTS

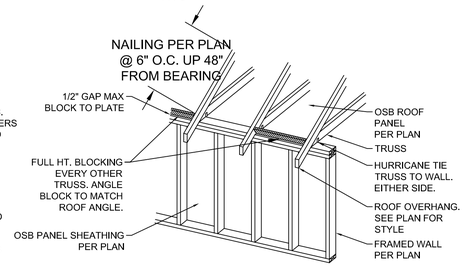

26 WALL TO TRUSS

NTS

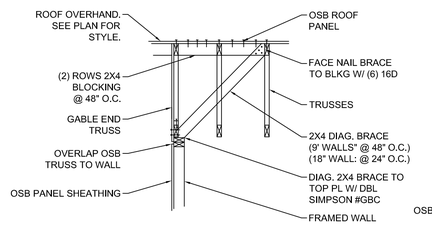

27 WALL TO GABLE TRUSS

NTS

-OR-

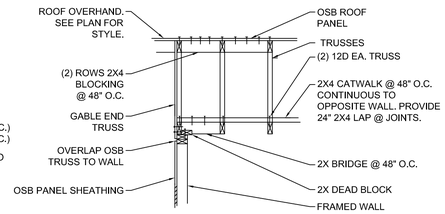

WALL TO GABLE TRUSS

NTS

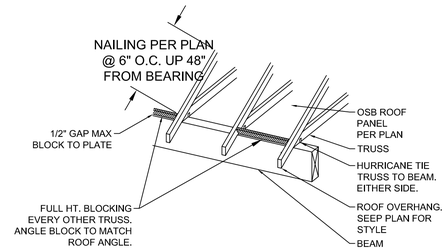

28 BEAM TO TRUSS

NTS

29 NO DETAIL

NTS

30 NO DETAIL

NTS

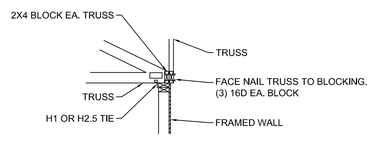

31 TRUSS TO TRUSS

NTS

PRICE ENGINEERING INC.
STRUCTURAL • CIVIL
3677 NORTH HWY 126 SUITE 4B FARR WEST, UT 84404

PROJECT TITLE:
Bair Design Clarkston Town Hall Addition
25 South Main Street
Clarkston, Utah

MARK	DESCRIPTION	DATE
	DESIGN SET	03/15/2022

DESIGNED BY:
JACKSON SAGERS 385-329-1033
JACKSON@PRICE-ENGINEERING.COM

CHECKED BY:
KYLE PRICE 801-791-6274
KYLE@PRICE-ENGINEERING.COM

LICENSED STRUCTURAL ENGINEER NO. 362266 KYLE RUSSELL PRICE STATE OF UTAH
08/12/2022

SHEET TITLE:
STRUCTURAL DETAILS

SD2

C:\Users\DellUser\Box\Price Engineering\Current Projects\Bair Design\Bair Design Clarkston Town Hall Addition\Revision 08_12_22\Eng Plans Bair Design Clarkston Town Hall Addition.dwg Aug 12, 2022 2:52pm

SOILS AND EXCAVATION NOTES

UNIFIED SOIL CLASSIFICATION: NO SOILS REPORT PROVIDED.
DESIGN SOIL BEARING PRESSURE: 1500 PSF (ASSUMED).

1. ALL DESIGN IS BASED ON STABLE SOIL CHARACTERISTICS. GEOTECHNICAL HAZARDS FOUND ON OR AROUND THE SITE OR SOILS FOUND AT THE SITE WHILE EXCAVATION OCCURS WHICH DIFFERS FROM THOSE ASSUMED SHOULD BE BROUGHT TO THE ATTENTION OF THE BUILDING OFFICIAL AND ENGINEER.

2. ALL FOOTINGS SHALL BEAR ON UNDISTURBED SOIL OR UNIFORM CRUSHED GRAVEL. SOFT AREAS DEEPER THAN 2' AND ANY ON SITE OR OTHER GEOTECHNICAL HAZARDS SHALL BE INVESTIGATED AND APPROVED BY A LICENSED GEOTECHNICAL ENGINEER.

3. DO NOT BACKFILL FOUNDATION WALLS UNTIL THE CONCRETE FLOOR SLAB IS IN PLACE AND HAS CURED A MINIMUM OF 7 DAYS.

CONCRETE SPECS & DETAILING

ELEMENT	(F'c) MINIMUM	(F'c) RECOMMENED	W/C RATIO
FOOTINGS	3000 PSI	3000 PSI	.50
WALLS	3500 PSI	3500 PSI	.50
SUSP. SLABS	3500 PSI	3500 PSI	.45
SLABS	3500 PSI	4000 PSI	.45

1. (F'c) STRENGTH BASED ON 28 DAY CURE TIME
2. PORTLAND TYPE I/II CEMENT.
3. 25% MAXIMUM CLASS "C" OR "F" FLY ASH BE WEIGHT
4. 3/4" MAX AGGREGATE SIZE
5. 4" MAXIMUM SLUMP
6. ADMIXTURES ACCEPTABLE EXCLUDING CALCIUM CHLORIDE

STEEL REINFORCEMENT DETAILING & SPECIFICATIONS	
NON-WELDABLE (ALL U.N.O.)	ASTM A 615 GRADE 60
WELDABLE	ASTM A 706 GRADE 60 LOW ALLOY
WELDED WIRE FABRIC	ASTM A 185

REINFORCEMENT CONCRETE COVER (MIN.)	INCHES
EXPOSED TO EARTH (NOT FORMED)	3"
EXPOSED TO EARTH OR WEATHER (FORMED)	2"
NOT EXPOSED TO EARTH OR WEATHER	1-1/2"

REINFORCEMENT (REBAR) LAP SCHEDULE

SIZE	MINIMUM LAP FOR CONTINUOUS REBAR, U.N.O.
#3	12"
#4	18"
#5	20"
#6	24"

1. CONTRACTOR RESPONSIBLE FOR FORMWORK AND SHORING.
2. REINFORCMENT SUPPORT PER ACI 315
3. ROUGHEN CONSTRUCTION JOINT SURFACES TO 1/4" AMPLITUDE OR MORE
4. BEND REINFORCEMENT COLD ONCE
5. BEND RADII AND HOOK LENGTHS TO COMFORM TO ACI 318.
6. PROVIDE CONTINUOUS CORNER BARS AT WALL AND FOOTING CORNERS LONG ENOUGH TO MEET REQUIRED LAP LENGTHS.

CONCRETE PLACEMENT & CONSTRUCTION SPECS

1. VIBRATE AND CONSOLIDATE CONCRETE DURING PLACEMENT AS NEEDED TO LIMIT VOIDS AND SEPARATING OF MATERIAL INGREDIENTS.
2. WHEN PLACING CONCRETE IN HOT OR COLD WEATHER, PROVIDE PROTECTION FROM FREEZING OR ACCELERATED DRYING.
3. CONCRETE SLAB CONTROL JOINT DEPTH SHALL BE 1/3 THE SLAB THICKNESS MIN. AND SPACED NO MORE THE 30 TIMES THE SLAB THICKNESS OR PER SCHEDULE BELOW, BUT NOT MORE THAN 1.25 TIMES ANY SLAB EDGE LENGTH.

SLAB THICKNESS	JOINT DEPTH MIN	SPACING MAX
3-1/2"	1-1/4"	8'-0"
4"	1-1/2"	10'-0"
5"	1-3/4"	12'-0"
6"	2"	15'-0"

FROST DEPTH, GRADING, DRAINAGE

SEE PLAN	MINIMUM FROST DEPTH
SEE PLAN	MINIMUM FINISH GRADE TO TOP OF FOUND.

NOTES:

1. FROST DEPTH IS THE REQUIRED DEPTH OF THE UNHEATED SIDE OF THE FOUNDATION AND FOOTING, FROM ANY SURFACE OF THE ADJACENT FINISH GRADE TO THE BOTTOM OF FOOTING.
2. FINISH GRADE SHALL SLOPE DOWN AWAY FROM HOME FOUNDATIONS AT LEAST 6" OF DROP THE FIRST 10 FEET OF HORIZONTAL DISTANCE.
3. DOWNSPOUTS SHALL EXTEND OUT AWAY FROM THE FOUNDATION AT LEAST 5 FEET OR INTO AN APPROVED DRAINAGE SYSTEM OR ON SITE PIPING.
4. ALL LOT DRAINAGE SHOULD BE GRADED TO DRAIN TO APPROVED AREAS, SWALES, OR DRAINAGE SYSTEMS., PER THE REQUIREMENTS OF THE GOVERNING CITY OR COUNTY.

SHEAR WALL SCHEDULE

DESIGNATION (SEE PLAN)	OSB PANEL QTY.	8D SPACING EDGE O.C.	STUD SIZE & QTY. INSIDE EDGES ONLY. (SEE DIAGRAM BELOW)
SW6	(1) SIDE	6"	(1) 2X
SW4	(1) SIDE	4"	DBL 2X OR (1) 4X
SW3	(1) SIDE	3"	DBL 2X OR (1) 4X
SW2	(1) SIDE	2"	(1) 4X
SW4–DBL	BOTH SIDES	4"	DBL 2X OR (1) 4X

SHEAR WALL FRAMING SPECS:

1. PROVIDE 7/16" THICK APA STAMPED EXPOSURE 1 OSB SHEATHING OR BTR. PROVIDE STUDS @ 16" O.C. MAXIMUM.

2. FASTEN ALL WALL PANELS W/ 8D NAILING @ 12" O.C. EXCEPT ON PANEL EDGES. SEE ABOVE FOR PANELS EDGE FASTENING SPECS.

3. BLOCK ALL WALL PANEL (OSB) EDGES. OVERLAP PANELS OVER TOP AND BOTTOM PLATES.

4. FASTEN SILL PLATES TO WOOD FLOORS W/ 16D @ 4" O.C. STAGGERED.

5. FASTEN ALL DBL 2X STUD MEMBERS TOGETHER WITH 16D @ 6" O.C. STAGGERED.

6. TOP PLATES ARE CONTINUOUS WITH A 12" OVERLAP MIN, OR PROVIDE SIMPSON 16 GA. CS16 STRAPPING WITH A 12" MIN. LAP.

SHEAR WALL DIAGRAM

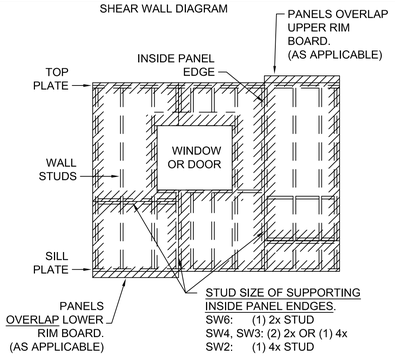

TABLE OF EQUIVALENT FASTENERS

NAIL SIZE	NAIL SPACING	STAPLE SPACING			NOTES
		14 GA.	15 GA.	16 GA.	
8D		14 GA.	15 GA.	16 GA.	ALL STAPLES ARE 2" LONG MINIMUM
	12"	12"	10"	8"	
	10"	10"	8"	6-1/2"	
	6"	6"	5"	4"	
	4"	4"	3-1/2"	2-1/2"	
	3"	3"	2-1/2"	1-1/2"	
10D		14 GA.	15 GA.	16 GA.	
	12"	9-1/2"	8"	6-1/2"	
	10"	8"	7"	5-1/2"	
	6"	5"	4"	3-1/2"	
	4"	3"	2-1/2"	2"	
	3"	2-1/2"	2"	1-1/2"	

FRAMING NAILING SCHEDULE U.N.O.

	CONNECTION DESCRIPTION	NAILING	NOTES
1	JOIST TO TOP PLATE OR BEAM	(2) 16D	TOENAIL
2	BLOCKING (BLKG) TO SILL OR BEAM	16D @ 4"O.C.	TOENAIL
3	SILL TO JOIST, RJ, BLKG, BEAM THRU FLOOR	16D @ 4" O.C.	FACE NAIL
4	TOP OR SILL PLATE TO STUD	(2) 16D	FACE NAIL
5	BUILT UP (MULTIPLE) STUDS / COLUMNS	16D @ 16" O,C.	FACE NAIL
6	DBL. TOP PLATE LAP	16D @ 4" O.C.	FACE NAIL
7	DBL. TOP PLATE INTERSECTION LAP	(2) 16D	FACE NAIL
8	HEADERS, BEAMS, GIRDERS MULTIPL/BUILT UP	(2) 16D @ 16"	FACE NAIL
9	OSB PANELS TO 2X WALL FRAMING	8D @ 6" / 12"	EDGE/INT.

ALL FASTENERS WHICH ARE TO BE INSTALLED IN PRESERVATIVE TREATED WOOD SHALL MEET THE REQUIREMENTS OF IBC 2304.10.

ROOF PANEL SCHEDULE

SEE NOTES 1,2,3

ROOF DESIGN SNOW LOAD	PANEL THICKNESS
UP TO 40 PSF	7/16"
UP TO 70 PSF	1/2"
UP TO 130 PSF	5/8"
FOR ROOF SNOW LOAD SEE DESIGN CRITERIA THIS SHEET.	

ROOF PANEL FASTENING TABLE

NAILING SPEC WHERE PANEL MEETS MEMBER, I.E. TRUSS, JOIST, BLOCK. (SEE DIAGRAM BELOW)	10D O.C. NAILING	
	PANEL EDGE	PANEL FIELD
6/12	6"	12"
6/6	6"	6"
3/3	3"	3"

NOTES (TYP.)

1. ALL ROOF PLANELS SHALL BE APA STAMPED, EXPOSURE 1, & RATED AS FOLLOWS:

THICKNESS SPAN RATING
7/16" 24/16
1/2" 32/16
5/8" 40/20

2. PROVIDE EDGE NAILING APPROX. 1/2" FROM PANEL EDGES W/ INSIDE EDGES SHARING INSIDE ROOF TRUSS, JOISTS & BEAMS. PROVIDE EDGE NAILING ALONG ALL BLOCKING.

3. PROVIDE A MAX. JOIST OR TRUSS SPACING OF 24" O.C.

GABLE END ROOF NAILING SCHEDULE (SEE TABLE ABOVE)

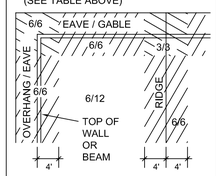

PLAN VIEW

HIP ROOF NAILING SCHEDULE (SEE TABLE ABOVE)

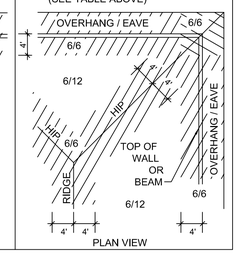

PLAN VIEW

ROOF TRUSS & JOIST NOTES

TRUSSES (PRE-MANUFER'D)	1. ENGINEERING FOR TRUSSES IS PROVIDED BY THE MANUFACTURER. 3. PROVIDE METAL MANUFACTURED HURRICANE TIES AT ALL TRUSS BEARING LOCATIONS, H2.5 MIN, U.N.O. (SEE PLAN) 4. PROVIDE FULL HIEGHT BLOCKING AT TRUSS BEARING LOCATIONS EVERY OTHER TRUSS SPACING MINIMUM. 5. THESE PLANS HAVE BEEN ENGINEERED BASED ON THE ROOF FRAMING PLANS PROVIDED. TRUSS LAYOUTS DIFFERING FROM THE ROOF FRAMING PLANS SHOULD BE BROUGHT TO THE ATTENTION OF THE STRUCTURAL ENGINEER. 6. THE TRUSS PACKAGE DESIGN SHALL BE SUBMITTED TO THE BUILDING OFFICIAL AS A DEFERRED SUBMITTAL PER IBC 2303.4. PRIOR TO PACKAGE SUBMITTAL, IT SHALL BE REVIEWED BY THE ENGINEER OF RECORD AND STAMPED FOR GENERAL CONFORMANCE.
ROOF JOISTS	1. PROVIDE SIMPSON VPA CONNECTORS AT ALL JOIST BEARING LOCATIONS. 2. PROVIDE FULL HIEGHT BLOCKING EVERY OTHER JOIST.

FLOOR SHEATHING NOTES

FLOOR SHEATHING U.N.O.:

1. PROVIDE 23/32" 'APA' STAMPED, EXPOSURE 1, T&G OSB PANELS FASTEN WITH 10D COMMON OR GALVANIZED NAILS @ 6"/ 12" EDGE / FIELD O.C.
2. PROVIDE CONTINUOUS GLUE JOIST TO PANELS.

WALL STUD HEIGHTS & LOAD BLOCKING

FRAMED WALL STUD HEIGHTS (HEIGHTS ARE UNSUPPORTED CLEAR SPANS) SEE NOTES 1,2

WALL STUDS MAX. HEIGHT	NOMINAL DF SIZE	VERT. O.C. SPACING	LATERAL SUPPORT
UP TO 10'	2 X 4	16"	NONE
UP TO 12'	2 X 4	12"	OSB, PLYWOOD, OR GLUED GYPSUM BOARD
UP TO 14'	2 X 6	16"	
UP TO 16'	2 X 6	12"	
UP TO 18'	2 X 6	8"	
UP TO 17'	1-1/2"x5-1/2"*	16"	
UP TO 18'	1-1/2"x5-1/2"*	12"	
UP TO 20'	1-1/2"x7-1/4"*	16"	

*TJI TIMBERSTRAND LSL STUDS. CONTACT ENGINEER FOR OTHER BRANDS OR CONFIGURATIONS.

NOTES (TYP.)

1. PLAN WALL SPECS, DIMENSIONS AND SCALES GOVERN WALL SIZING.

2. SEE MINIMUM NAILING SCHEDULE TABLE WHEN USING WALL STUD HT. TABLE.

3. PROVIDE 2X DF OR BTR. SQUASH BLOCKING UNDER ALL POINTS LOADS TRANSFERRED THROUGH WALLS FROM BEAMS AND GIRDER TRUSSES SUPPORTED BY MORE THEN (1) TRIMMER (SEE BEAM SCHEDULE) AND WHEN NOT LOCATED ALONG EXTERIOR WALLS WHEN RIM JOISTS ARE NOT PROVIDED.

DESIGN CRITERIA

GOVERNING CODE: 2018 IBC, ASCE 7
RISK CATEGORY II

1. LIVE LOADS:
ASSEMBLY AREAS 100 PSF
HALLWAYS 100 PSF
OFFICE AREAS 50 PSF
ROOF 20 PSF

2. SNOW LOAD:
GROUND Pg 54 PSF
ROOF Ps 38 PSF + DRIFT
Pf: 38 PSF
Cs: 1.0 Ce: 1.0
Ct: 1.0 I: 1.0

3. WIND:
DESIGN SPEED:
120 MPH 3 SEC. GUST
EXPOSURE: C

4. SEISMIC:
SDC: D R: 6.5 I: 1.0
SITE CLASS: D (ASSUMED)
Sms: 1.44
Sm1: 0.97
Sds: 0.96

FORCE RESISTING SYSTEM:
WOOD LIGHT FRAME W/ WOOD PANEL

ANALYSIS PROCEDURE:
SIMPLIFIED (IBC 12.14.8)

5. SOIL BEARING: ALLOWABLE PRESSURE ON NATIVE SOIL:
1500 PSF (ASSUMED)

6. DEAD LOADS:
ROOF 15 PSF (ASPHALT SHINGLES)
FLOOR 15 PSF (INCL. THIN TILE)
WALL 10 PSF (STUCCO, SIDING)
WALL 45 PSF (VENEER: BRICK,STONE)
CONCRETE 145 PCF (FTGS, FOUND, ETC)

BEAM SCHEDULE EX

SEE NOTES 1,2,3,4,5

DESIGNATION (SEE PLAN)	BEAM DESCRIPTION	END TRIMMER QTY.	U.N.O.	TYPE U.N.O.
MIN. BEAM OR HEADER U.N.O.	(2) 2 X 10 DF#2	1		2X4
B(2)5.1/2	(2) 1-3/4" X 5-1/2" LVL	1		2X4
B(2)6	(2) 2 X 6 DF/HF#2	1		2X4
B(2)7.1/4	(2) 1-3/4" X 7-1/4" LVL	1		2X4
B(3)7.1/4	(3) 1-3/4" X 7-1/4" LVL	1		2X4
B(2)8	(2) 2 X 8 DF/HF#2	1		2X4
B(3)8	(3) 2 X 8 DF/HF#2	1		2X6
B(2)9.1/2	(2) 1-3/4" X 9-1/2" LVL	3		2X4
B(2)9.1/2	(2) 1-3/4" X 9-1/2" LVL	2		2X6
B(3)9.1/2	(3) 1-3/4" X 9-1/2" LVL	3		2X6
B(2)10	(2) 2X10" DF/HF #2	1		2X4
B(3)10	(3) 2 X 10 DF/HF#2	1		2X4
B(1)11.7/8	(1) 1-3/4" X 11-7/8" LVL	2		2X4
B(2)11.7/8	(2) 1-3/4" X 11-7/8" LVL	3		2X4
B(3)11.7/8	(3) 1-3/4" X 11-7/8" LVL	4		2X6
B(4)11.7/8	(4) 1-3/4" X 11-7/8" LVL	5		2X6
B(2)12	(2) 2 X 12 DF/HF#2	1		2X4
B(2)14	(2) 1-3/4" X 14" LVL	4		2X4
B(3)14	(3) 1-3/4" X 14" LVL	4		2X6
B(2)16	(2) 1-3/4" X 16" LVL	4		2X4
B(3)16	(3) 1-3/4" X 16" LVL	5		2X6
B(2)18	(2) 1-3/4" X 18" LVL	5		2X4
B(3)18	(3) 1-3/4" X 18" LVL	5		2X6
GLB	WOOD GLULAM BEAM.	SEE PLAN		
W#X##	STEEL WIDE FLANGE BEAM	SEE PLAN		

1. JOIN MULTIPLE PIECE BEAMS W/ (2) 16D @ 12" O.C.
2. PROVIDE METAL FRAMING CONNECTORS (I.E. SIMPSON #CB) TO TIE BEAMS GREATER THAN 6'-0" TO POSTS OR TRIMMERS.
3. LVL IS LAMINATED VENEER LUMBER, I.E., MICROLAM, VERSALAM. MINIMUM LVL SPEC PROVIDE 1.9E AND 2600 PSI F'b OR BTR.
4. GLB IS GLULAM BEAM. PROVIDE 24F-V4 SPEC U.N.O.
5. ALL STEEL BEAMS TO MEET ASTM A992 OR Fy = 50 ksi, Fu = 65 ksi CRITERIA.
6. X-BEAM IS ROSBORO X-BEAM BRAND GLULAM BEAMS OR EQUIV.

7. ALL BEAMS AND HEADERS MAY HAVE UP TO A 1-1/2" DIAMETER HOLE THRU THE ANY LOCATION OF THE SPAN, BUT NOT WITHIN 1" OF THE TOP OF BOTTOM OF THE DEPTH.

POST & COLUMN SCHEDULE

DESIGNATION (SEE PLAN)	DRESSED SECTION SIZE (APPROX) & GRADE (1)	CAP/BASE U.N.O.(2)	BASE TO CONC. U.N.O.(2)
P4X4	3-1/2" X 3-1/2" DF#1	BC4, LCE4	ABU44Z
P4X6	3-1/2" X 5-1/2" DF#1	BC46, LCE4	ABU46Z
P6X6	5-1/2" X 5-1/2" DF#1	BC6, AC6	ABU66Z
P6X8	5-1/2" X 7-1/2" DF#1	BC_, AC6	SEE PLAN
P8X8	7-1/2" X 7-1/2" DF#1	BC_, AC6	ABU88Z
P10X10	9-1/2" X 9-1/2" DF#1	SEE PLAN	ABU1010Z
P12X12	11-1/2" X 11-1/2" DF#1	SEE PLAN	ABU1212Z
P6X6RS	6" X 6" DF#1	AC6	ABU66RZ
P8X8RS	8" X 8" DF#1	SEE PLAN	ABU88RZ
P10X10RS	10" X 10" DF#1	SEE PLAN	ABU1010RZ
P12X12RS	12" X 12" DF#1	SEE PLAN	ABU1212RZ

1. DF#1 = DOUG FIR GRADE #1 OR BETTER
2. CONNECTOR MODEL NUMBERS RELATE TO SIMPSON STRONG TIE OR USP (MITEK) BRAND WHERE APPLICABLE. OTHER CONNECTOR MODEL NUMBERS ACCEPTABLE IF ALL RATED CAPACITIES EXCEED THOSE LISTED. (LCE_) & (AC_) MODELS ARE INSTALLED IN PAIRS.
U.N.O. = UNLESS NOTED OTHERWISE (ON THE PLANS).

PRICE ENGINEERING INC.
STRUCTURAL • CIVIL
3677 NORTH HWY 126 SUITE 4B FARR WEST, UT 84404

PROJECT TITLE:
Bair Design Clarkston Town Hall Addition
25 South Main Street
Clarkston, Utah

MARK	DESCRIPTION	DATE
	DESIGN SET	03/15/2022

DESIGNED BY:
JACKSON SAGERS 385-329-1033
JACKSON@PRICE-ENGINEERING.COM

CHECKED BY:
KYLE PRICE 801-791-6274
KYLE@PRICE-ENGINEERING.COM

LICENSED STRUCTURAL ENGINEER NO. 362266 KYLE RUSSELL PRICE STATE OF UTAH
08/12/2022

SHEET TITLE:
STRUCTURAL SCHEDULE AND NOTES

SD3

C:\Users\DellUser\Box\Price Engineering\Current Projects\Bair Design\Bair Design Clarkston Town Hall Addition\Revision 08_12_22\Eng Plans Bair Design Clarkston Town Hall Addition.dwg Aug 12, 2022 2:53pm

MECHANICAL SYMBOL LEGEND

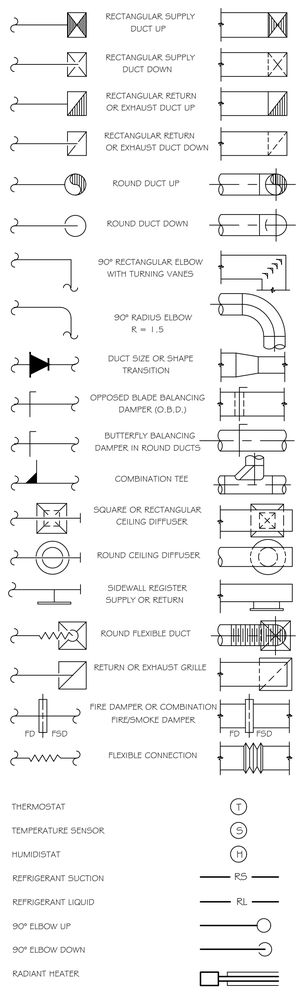

MECHANICAL ABREVIATIONS

AD	ACCESS DOOR	N/A	NOT APPLICABLE
AHU	AIR HANDLING UNIT	NIC	NOT IN CONTRACT
BD	BALANCING DAMPER	NTS	NOT TO SCALE
BHP	BRAKE HORSE POWER	NO	NUMBER
BTU	BRITISH THERMAL UNIT	OZ	OUNCE
CFM	CUBIC FEET PER MINUTE	OA	OUTSIDE AIR
COND	CONDENS(-ER,-ING,-ATION)	PSF	POUNDS PER SQAURE FT.
CLG	COOLING	PSI	POUNDS PER SQUARE IN.
CW	COLD WATER	PSIA	PSI ABSOLUTE
DP	DEPTH OR DEEP	PSIG	PSI GAUGE
ID	INSIDE DIAMTER	PRESS	PRESSURE
OD	OUTSIDE DIAMTER	PD	PRESSURE DIFFERENCE
DB	DRY BULB TEMPERATURE	SP	STATIC PRESSURE
(E)	EXISTING	RA	RETURN AIR
EFF	EFFICIENCY	RPM	REVOLUTIONS PER MIN.
ELEV	ELEVATION	SF	SAFETY FACTOR
EWT	ENTERING WATER TEMP.	SL	SEA LEVEL
EVAP	EVAPORAT(-E,-ING,-ED,-OR)	SH	SENSIBLE HEAT
(F)	FUTURE	SC	SHADING COEFFICIENT
F	FARENHEIT	SPEC	SPECIFICATION
FC	FLEXIBLE CONNECT(-OR,-ION)	SQ	SQUARE
FD	FIRE DAMPER	STD	STANDARD
FPS	FEET PER SECOND	SP	STATIC PRESSURE
FSD	FIRE SMOKE DAMPER	SPLY	SUPPLY
FT	FEET	SA	SUPPLY AIR
GAL	GALLON(S)	TEMP	TEMPERATURE
GPH	GALLONS PER HOUR	TD	TEMP. DROP OR DIFF.
GPM	GALLONS PER MINUTE	R	THERMAL RESITANCE
HD	HEAD	TSTAT	THERMOSTAT
HT	HEIGHT	T	TIME
HTG	HEATING	VAC	VACUUM
HP	HORSE POWER	VAV	VARIBLE AIR VOLUME
HW	HOT WATER	VENT	VENT, VENTILATION
LH	LATENT HEAT	VERT	VERTICAL
LAT	LEAVING AIR TEMPERATURE	VOL	VOLUME
LWT	LEAVING WATER TEMP.	WTR	WATER
LG	LENGTH	WT	WEIGHT
MAX	MAXIMUM	WB	WET BULB TEMP.
MIN	MINIMUM	YR	YEAR
NO	NORMALLY OPEN		
NC	NORMALLY CLOSED		

MECHANICAL SPECIFICATIONS 3

FURNACES

A. PROVIDE AND INSTALL FURNACES WITH CAPACITIES, FEATURES, AND ACCESSORIES AS SHOWN ON THE EQUIPMENT SCHEDULE. PROVIDE EQUIPMENT FROM THE FOLLOWING APPROVED MANUFACTURERS: BRYANT, CARRIER, LENNOX, TRANE, YORK.

B. PROVIDE 10 YEAR MINIMUM WARRANTY FOR THE HEAT EXCHANGER.

C. PROVIDE AN EXTRA SET OF FAN BELTS FOR EACH FAN AND AN EXTRA SET OF FILTERS FOR EACH UNIT.

D. FURNACE SHALL BE FACTORY ASSEMBLED AND TESTED. UNIT SHALL BE CONSTRUCTED WITH MANUFACTURER'S STANDARD CONSTRUCTION WITH ALL COMPONENTS, EQUIPMENT, AND ACCESSORIES. THE ENCLOSURE SHALL HAVE A CORROSION-PROTECTION COATING AND EXTERIOR FINISH.

E. PROVIDE THE FOLLOWING FEATURES WITH THE FURNACE UNLESS NOTED OHERWISE ON THE EQUIPMENT SCHEDULE: 7-DAY PROGRAMMABLE THERMOSTAT WITH AUTOMATIC HEATING AND COOLING CHANGEOVER, AND SERVICE DISCONNECT.

F. PROVIDE COMPLETE FURNACE STARTUP AND COMMISSIONING INCLUDING CONTROLS CHECKOUT, LUBRICATION, FAN ROTATION, VIBRATION, REFRIGERATION SYSTEM, CLEANING, TESTING, AND BALANCING.

G. PROVIDE A FACTORY AUTHORIZED SERVICE REPRESENTATIVE TO COMPLETE THE UNIT STARTUP AND OWNER TRAINING.

AIR COOLED CONDENSING UNITS

A. PROVIDE AND INSTALL AIR-COOLED CONDENSING UNITS WITH CAPACITIES, FEATURES, AND ACCESSORIES AS SHOWN ON THE EQUIPMENT SCHEDULE. PROVIDE EQUIPMENT FROM THE FOLLOWING APPROVED MANUFACTURERS:
BRYANT, CARRIER, LENNOX, TRANE, YORK.

B. CONDENSING UNIT SHALL BE FACTORY ASSEMBLED AND TESTED. UNIT SHALL BE CONSTRUCTED WITH MANUFACTURER'S STANDARD CONSTRUCTION WITH ALL COMPONENTS, EQUIPMENT, AND ACCESSORIES. THE ENCLOSURE SHALL HAVE A CORROSION-PROTECTION COATING AND EXTERIOR FINISH.

C. PROVIDE THE FOLLOWING FEATURES WITH THE CONDENSING UNIT UNLESS NOTED OHERWISE ON THE EQUIPMENT SCHEDULE: LOW AMBIENT HEAD-PRESSURE CONTROL TO OPERATE AT 0 DEG. F., VIBRATION ISOLATION PADS, MOTOR STARTER, AND SERVICE DISCONNECT.

D. PROVIDE COMPLETE UNIT STARTUP AND COMMISSIONING INCLUDING CONTROLS CHECKOUT, LUBRICATION, FAN ROTATION, VIBRATION, REFRIGERATION SYSTEM, CLEANING, TESTING, AND BALANCING.

E. PROVIDE A FACTORY AUTHORIZED SERVICE REPRESENTATIVE TO COMPLETE THE UNIT STARTUP AND OWNER TRAINING.

COMMISSIONING

A. PROVIDE SYSTEM COMMISSIONING OF ALL MECHANICAL SYSTEMS CONSISTING OF FIELD VERIFICATION AND CERTIFYING THAT THE MECHANICAL SYSTEM IS PROPERLY INSTALLED AND IS FULLY OPERATIONAL.

B. PROVIDE A SYSTEM COMMISSIONING REPORT TO BE INCLUDED IN THE OPERATION AND MAINTENANCE MANUAL THAT INCLUDES A CHECKLIST OF ALL EQUIPMENT AND SYSTEMS.

ELECTRIC AND ELECTRONIC CONTROLS

A. PROVIDE AND INSTALL A COMPLETE AUTOMATIC CONTROL SYSTEM AS DESCRIBED IN THE DRAWINGS. ALL SYSTEM CONTROLS SHALL BE PROVIDED BY A SINGLE MANUFACTURER'S PRODUCTS. APPROVED MANUFACTURERS ARE: BRYANT, CARRIER, HONEYWELL, TRANE

TEST AND BALANCE

A. PROVIDE A COMPLETE AIR SYSTEM BALANCE, TEST, AND REPORT BY A NEBB, OR AABC CERTIFIED TEST AND BALANCE SUPERVISER WITH EXPERIENCE IN BALANCING SYSTEMS OF SIMILAR TYPES AND SIZE.

B. PROVIDE ALL NECESSARY TOOLS, EQUIPMENT, SHEAVE CHANGES, BELTS, AND ACCESSORIES TO COMPLETE WORK.

C. PROVIDE A REPORT SHOWING THE REQUIRED AND THE ACTUAL FLOWS. INCLUDE IN THE REPORT A DRAWING SHEMATIC OF THE SYSTEMS BALANCED, AND SYSTEMS CHECK REPORT. SUBMIT THE BALANCING REPORT FOR REVIEW PRIOR TO THE FINAL INSPECTION. ALL REPORTS SHALL BE INCLUDED IN THE OPERATION AND MAINTENANCE MANUAL.

MECHANICAL SPECIFICATIONS 2

F. PROVIDE AND INSTALL 3/4" FLEXIBLE ELASTOMERIC CELLULAR INSULATION ON ALL REFRIGERANT SUCTION PIPING. USE APPROVED ADHESIVE AND PAINT ALL EXTERIOR INSTALLED PIPE INSULATION WITH A LATEX ENAMEL PAINT COATING AS RECOMMENDED BY THE INSULATION MANUFACTURER.

METAL DUCTS

A. PROVIDE AND INSTALL SHEETMETAL DUCTS CONFORMING TO SMACNA, ASHRAE, AND AND NFPA 90A STANDARDS AS SHOWN ON THE MECHANICAL PLANS.

B. SHOP FABRICATE SQUARE, RECTANGULAR, ROUND, AND OVAL DUCTS, FITTINGS, HANGERS AND SUPPORTS ACCORDING TO SMACNA HVAC DUCT CONTRUCTION STANDARDS.

C. FACTORY APPLY DUCT LINER USING APPROVED SMACNA METHODS TO ALL REQUIRED DUCTS AS INDICATED IN THE INSULATION SECTION OF THIS SPECIFICATION.

D. PROVIDE TURNING VANES IN ALL RECTANGULAR DUCT FITTINGS OVER 45° ANGLES. PROVIDE 1.5 RADIUS ELBOWS ON ALL ROUND DUCTS.

E. SEAL ALL LONGITUDINAL AND TRANSVERSE JOINTS, SEAMS, AND CONNECTIONS WITH AN APPROVED SEALANT OR SEALING METHOD.

F. DUCT DIMENSIONS SHOWN ARE SHOWN ARE SHEETMETAL SIZES. NO INCREASE FOR DUCT LINER IS REQUIRED.

G. INSTALL DUCTWORK IN THE MOST EFFICIENT MANNER POSSIBLE, MINIMIZING JOINTS AND CHANGES IN DIRECTION.

H. PROTECT STORED AND INSTALLED DUCTWORK FROM DUST, DIRT, MOISTURE, AND CONSTRUCTION DEBRIS. CLEAN ALL DUCTWORK PRIOR TO OPERATION.

I. ALL ROUND DUCTS SHALL BE CONSTRUCTED OF SPIRAL WOUND SHEET METAL.

J. TYPE I HOODS SHALL BE CONNECTED WITH GREASE DUCTS CONSTRUCTED OF NO. 16 GAGE STEEL OR NO. 18 GAGE STAINLESS STEEL DUCTS.

DUCT ACCESSORIES

A. PROVIDE AND INSTALL THE FOLLOWING DUCT ACCESSORIES WHERE INDICATED ON THE DRAWINGS: BACKDRAFT DAMPERS, BALANCING DAMPERS, FIRE DAMPERS, COMBINATION FIRE/SMOKE DAMPERS, ACTUATORS, TURNING VANES, ACCESS DOORS, FLEXIBLE DUCTS, AND ACCESSORIES HARDWARE.

B. PROVIDE CONCEALED DAMPER REGULATORS WITH REQUIRED LINKAGES AND COVER PLATES FOR EACH DAMPER LOCATED ABOVE A NON-ACCESSIBLE CEILING.

C. FIRE DAMPERS SHALL BE UL LISTED AND LABELED. FIRE DAMPERS SHALL BE RATED FOR 1-1/2 HOURS FOR FIRE RESISTIVE ASSEMBLIES RATED FOR 2 HOURS OR LESS AND RATED FOR 3 HOURS FOR FIRE RESISTIVE ASSEMBLIES RATED 3 HOURS OR MORE. REPLACEABLE FUSIBLE LINKS RATED FOR 165° F SHALL BE USED. USE TYPE A, B, OR C AS INDICATED ON THE DRAWINGS.

E. PROVIDE TURNING VANES WHERE NOTED IN THE METAL DUCTS SPECIFICATION.

F. PROVIDE DUCT MOUNTED ACCESS DOORS AT ALL FIRE DAMPERS, FIRE/SMOKE DAMPERS, AND MOTORIZED CONTROL DAMPERS. ACCESS DOORS SHALL BE FACTORY CONSTRUCTED OF GALVANIZED SHEET METAL AND HAVE HINGES, GASKETS, SEALS, AND LATCHES.

G. FLEXIBLE DUCTS SHALL BE ROUND INSULATED, FACTORY-FABRICATED OR CORRUGATED ALUMINUM WITH AN OUTER JACKET, AND A SPIN COLLAR. THE MAXIMUM ALLOWABLE LENGTH OF FLEX DUCT SHALL BE 5'-0" AT ALL DIFFUSER TERMINATIONS.

H. PROVIDE INSTRUMENT TEST HOLES AT THE INLET AND OUTLET OF ALL FAN SYSTEMS.

I. INSTALL ALL DUCT ACCESSORIES ACCORDING TO THE MANUFACTURER'S INSTRUCTIONS AND SMACNA STANDARDS.

EXHAUST FANS

A. PROVIDE AND INSTALL EXHAUST FANS WITH TYPE, CAPACITIES, FEATURES, AND ACCESSORIES AS SHOWN ON THE EQUIPMENT SCHEDULE. PROVIDE EQUIPMENT FROM THE FOLLOWING APPROVED MANUFACTURERS:
ACME, BROAN, CARNES, COOK. GREENHECK, PENN-BARRY

B. ALL EXHAUST FANS SHALL DESIGNED, MANUFACTURED, TESTED, AND LABELED IN ACCORDANCE WITH UL REQUIREMENTS AND AMCA STANDARDS.

C. PROVIDE FACTORY FABRICATED AND ASSEMBLED EXHAUST FANS COMPLETE WITH ALUMINUM HOUSING, ALUMINUM FAN WHEEL, SHAFT, BEARINGS, DIRECT OR BELT DRIVE ASSEMBLY, PAINTED STEEL OR ALUMINUM GRILL, BACKDRAFT DAMPER, MOTOR, DISCONNECT SWITCH, MOUNTING BRACKETS, AND ACCESSORIES AS NOTED.

D. PROVIDE AND INSTALL REMOTE FAN SPEED CONTROL, PROGRAMMABLE TIMER, MANUAL TIMER, ON-OFF SWITCH AS INDICATED IN THE EQUIPMENT SCHEDULE.

E. PROVIDE COMPLETE FAN UNIT STARTUP AND COMMISSIONING INCLUDING CONTROLS CHECKOUT, LUBRICATION, FAN ROTATION, VIBRATION, CLEANING, TESTING, AND BALANCING.

AIR OUTLETS AND INLETS

A. PROVIDE FACTORY FABRICATED AND ASSEMBLED CEILING AIR DIFFUSERS AND GRILLES, WALL REGISTERS AND GRILLES, AND LOUVERS COMPLETE WITH ALL FEATURES AND ACCESSORIES AS NOTED IN THE SCHEDULE. PROVIDE EQUIPMENT FROM THE FOLLOWING APPROVED MANUFACTURERS:
AIROLITE, ANEMOSTAT, CARNES, COOLEY & HART, E.H. PRICE, J & J REGISTER, KRUEGER, LOUVERS AND DAMPERS, NAILOR, RUSKIN, TITUS, AND TUTTLE & BAILEY.

B. ALL AIR OUTLETS AND INLETS SHALL BE DESIGN, MANUFACTURERED, AND TESTED TO CONFORM TO ARI, ASHRAE, ADC, AND AMCA STANDARDS.

C. CEILING DIFFUSERS AND REGISTERS AND WALL REGISTERS AND GRILLES SHALL BE CONSTRUCTED OF GALVANIZED STEEL OR ALUMINUM AND SHALL HAVE A BAKED ENAMEL FINISH. COLOR SELECTION BY THE ARCHITECT OR OWNER.

D. LOUVERS SHALL BE CONSTRUCTED OF ALUMINUM EXTRUSIONS WITH WELDED CONNECTIONS OR STAINLESS STEEL FASTENERS. PROVIDE 1/2" ANODIZED ALUMINUM WIRE BIRD SCREEN. LOUVER FINISH SHALL BE ANODIZED ALUMINUM IN COLOR AS SELECTED BY THE ARCHITECT OR OWNER.

MECHANICAL SPECIFICATIONS 1

BASIC MECHANICAL REQUIREMENTS

A. COMPLY WITH THE REQUIREMENTS OF THE 2018 EDITION OF THE INTERNATIONAL BUILDING CODE (IBC), INTERNATIONAL MECHANICAL CODE (IMC), UNIFORM PLUMBING CODE (UPC), INTERNATIONAL FUEL GAS CODE (IFGC), AND INTERNATIONAL ENERGY CONSERVATION CODE (IECC), AND THE CURRENT NATIONAL ELECTRIC CODE (NEC) INCLUDING ALL STATE AMENDMENTS. COMPLY WITH THE AUTHORITY HAVING JURISDICTION AND ALL APPLICABLE CITY, COUNTY, STATE, AND FEDERAL CODES AND REGULATIONS IN EFFECT AT THE BID DATE.

B. PREPARE AND SUBMIT ELECTRONIC SHOP DRAWINGS FOR ALL MECHANICAL EQUIPMENT, VALVES, AND ACCESSORIES INCLUDING MANUFACTURER'S NAME, CATALOG NUMBER, DESCRIPTION, SIZE, CAPACITY, ELECTRICAL REQUIREMENTS, OPERATION, AND MAINTENANCE INFORMATION. SHOP DRAWINGS SHALL BE REVIEWED AND STAMPED BY THE MECHANICAL AND GENERAL CONTRACTOR PRIOR TO ENGINEER'S REVIEW. EQUIPMENT SHALL NOT BE ORDERED UNTIL APPROVED SHOP DRAWINGS HAVE BEEN RECEIVED.

C. PREPARE COORDINATION DRAWINGS DETAILING ALL MAJOR EQUIPMENT AND SYSTEMS. INCLUDE EQUIPMENT CONNECTIONS, CLEARANCES, FIRE-RATED WALL OR FLOOR PENETRATIONS, CONCRETE PADS, AND SUPPORT DETAILS IN COORDINATION DRAWINGS. COORDINATION DRAWINGS SHALL BE IN CONJUNCTION WITH THE MECHANICAL, FIRE SPRINKLER (WHERE REQUIRED), ELECTRICAL, REFLECTED CEILINGS, AND ALL OTHER APPLICABLE TRADES.

D. PREPARE RECORD "AS BUILT" DOCUMENTS INCLUDING ALL CHANGES FROM THE ORIGINAL BID DOCUMENTS. SUBMIT COMPLETE "AS BUILT" DOCUMENTS AT THE COMPLETION OF THE PROJECT.

E. PROVIDE 2 SETS OF OPERATION AND MAINTENANCE (O & M) MANUALS CONTAINING INFORMATION FOR ALL MECHANICAL AND PLUMBING SYSTEMS. THE MANUALS SHALL CONTAIN A LIST OF ALL SUB-CONTRACTORS AND SUPPLIERS, EQUIPMENT CUT SHEETS, START-UP INFORMATION, BALANCING REPORTS, AND MAINTENANCE REQUIREMENTS. THE MANUALS SHALL BE HARD BACKED 3-RING BINDERS WITH THE PROJECT LABELED ON THE COVER AND SPLINE.

F. INSTALL ALL MECHANICAL EQUIPMENT AND MATERIALS IN COORDINATION WITH ALL OTHER TRADES. VERIFY ALL ELECTRICAL CONNECTIONS WITH THE ELECTRICAL CONTRACTOR PRIOR TO INSTALLATION.

G. PROVIDE AND INSTALL ACCESS DOORS WHERE EQUIPMENT, VALVES OR DAMPERS ARE CONCEALED BEHIND FINISHED SURFACES.

H. PROVIDE FACTORY-AUTHORIZED EQUIPMENT START-UP, COMMISSIONING, AND TRAINING OF ALL MECHANICAL EQUIPMENT.

I. INSTALL ALL SYSTEMS, MATERIALS, AND EQUIPMENT LEVEL AND PLUMB, PARALLEL AND PERPENDICULAR TO OTHER BUILDING SYSTEMS AND COMPONENTS. INSTALL ALL PIPING FREE FROM SAGS AND BENDS AND AT THE SLOPE INDICATED (WHERE REQUIRED). INSTALL DUCTWORK, PIPING, AND EQUIPMENT TO PROVIDE THE MAXIMUM POSSIBLE HEADROOM.

J. ALL WORK SHALL BE PERFORMED BY CERTIFIED AND SKILLED WORKERS WITH PRIOR EXPERIENCE IN THEIR PARTICULAR TRADE.

K. THE MECHANICAL SUB-CONTRACTOR SHALL PROVIDE WARRANTY THE ENTIRE MECHANICAL SYSTEM FOR A PERIOD OF ONE YEAR. INCLUDE THE WARRANTY AND ALL OTHER GUARANTEES AND WARRANTIES IN THE OPERATION AND MAINTENANCE MANUAL.

L. THE CONTRACTOR SHALL STORE AND PROTECT ALL EQUIPMENT AND MATERIALS DURING CONSTRUCTION AS REQUIRED AND SHALL REPAIR OR REPLACE ALL DAMAGED PIPING, EQUIPMENT, OR OTHER DAMAGE DURING CONSTRUCTION.

M. PROVIDE AND INSTALL ALL MECHANICAL EQUIPMENT, PIPING, FIXTURE, AND ACCESSORIES IN STRICT ACCORDANCE WITH THE MANUFACTURER'S INSTALLATION INSTRUCTIONS. PROVIDE ALL FITTINGS, VALVES, TRANSITIONS, AND OTHER DEVICES AS REQUIRED FOR A COMPLETE AND OPERATIONAL MECHANICAL SYSTEM.

N. SUBMIT FOR PRIOR APPROVAL FOR EQUIPMENT MANUFACTURERS NOT LISTED IN THE SPECIFICATIONS A MINIMUM OF FIVE PRIOR TO BID.

BASIC MECHANICAL MATERIALS AND METHODS

A. ALL PIPE AND PIPE FITTINGS SHALL BE NEW AND SHALL BE AMERICAN MADE WITH APPROVED LABELS. DELIVER, STORE, AND PROTECT DUCTWORK AND PIPING DURING CONSTRUCTION FROM DAMAGE, DIRT, AND MOISTURE.

B. SEAL ALL DUCT AND PIPE PENETRATIONS THROUGH WALLS AND FLOORS AIR TIGHT. CAULK ALL FIRE RATED PIPE PENETRATIONS WITH APPROVED FIRE-STOPPING MATERIAL.

C. CUT, CHANNEL, CHASE, AND DRILL FLOORS, WALLS, PARTITIONS, CEILINGS, AND OTHER SURFACES NECESSARY FOR PROPER INSTALLATION. REPAIR AS REQUIRED TO MATCH ADJACENT SURFACES.

HANGERS AND SUPPORTS

A. PROVIDE AND INSTALL DUCT SUPPORTS AND HANGERS AS REQUIRED FOR ALL DUCTWORK AND EQUIPMENT ACCORDING TO MANUFACTURERS STANDARDIZATION SOCIETY (MSS) AND SMACA STANDARDS.

VIBRATION ISOLATION AND SEISMIC CONTROLS

A. PROVIDE AND INSTALL VIBRATION ISOLATORS, FLEXIBLE CONNECTIONS, ISOLATION PADS, AND OTHER EQUIPMENT TO PREVENT NOISE AND VIBRATION TRANSMISSION.

DUCTWORK AND EQUIPMENT IDENTIFICATION

A. PROVIDE DUCT AND EQUIPMENT TAGS, LABELS, AND IDENTIFICATION INDICATING FLOW DIRECTION, AREA SERVED, SYSTEM TYPE AND OTHER IDENDIFYING INFORMATION. COMPLY WITH ASME PIPING EQUIPMENT IDENTIFICATION STANDARDS.

INSULATION

A. PROVIDE AND INSTALL GLASS FIBER DUCT INSULATION ACCORDING TO THE FOLLOWING SCHEDULE:
RECTANGULAR SUPPLY AND RETURN DUCTS:
1" DUCT LINER
ROUND SUPPLY AND RETURN DUCTS:
1-1/2" BLANKET WRAP WITH VAPOR BARRIER.
ROUND AND RECTANGULAR EXHAUST DUCTS:
NO INSULATION UNLESS OTHERWISE NOTED.
UNLINED SUPPLY, COMBUSTION, AND OUTSIDE AIR DUCTS:
1-1/2" BLANKET WRAP WITH VAPOR BARRIER.
EXTERIOR INSTALLED SUPPLY AND RETURN DUCTS:
2" BLANKET WRAP WITH VAPOR BARRIER.

B. DUCT LINER SHALL BE 1" THICK, 2 LBS. DENSITY, WITH ASTM C 1071, TYPE II COATED ACRYLIC SURFACE AND PRE-TEATED FOR ANTI-MICROBIAL AGENT TO PREVENT MICROBIAL GROWTH.

C. GLASS FIBER INSULATION SHALL HAVE A FLAME SPREAD RATING OF 25 OR LESS AND A SMOKE DEVELOPED RATING OF 50 OR LESS.

D. SEAL ALL ENDS AND JOINTS TO PROVIDE A COMPLETELY SEALED INSULATION SYSTEM.

E. SEAL JOINTS, BREAKS AND PUNCTURES WITH VAPOR BARRIER COMPOUND.

MECHANICAL GENERAL NOTES

1. PROVIDE ALL EQUIPMENT, PIPING, MATERIALS, LABOR, PERMITS, AND FEES TO CONSTUCT A COMPLETE AND OPERATIONAL MECHANICAL SYSTEM FOR THE ENTIRE PROJECT AS SHOWN ON THE DRAWINGS.
2. COORDINATE THE EXACT LOCATION OF ALL CEILING DIFFUSERS AND GRILLES WITH THE ARCHITECTURAL REFLECTED CEILING PLAN.
3. COORDINATE ALL WORK WITH THE GENERAL CONTRACTOR, PLUMBING SUB-CONTRACTOR, ELECTRICAL SUB-CONTRACTOR, AND ALL OTHER TRADES IN THE PROJECT.
4. ALL MECHANICAL INFORMATION IS NOT SHOWN ON THE MECHANICAL DRAWINGS. COORDINATE ALL WORK WITH THE ARCHITECTURAL, STRUCTURAL, PLUMBING, CIVIL, AND ELECTRICAL DRAWINGS.
5. MECHANICAL PLANS ARE SCHEMATIC IN NATURE AND THEREFORE DO NOT SHOW ALL DROPS, RISERS, AND OFFSETS. THE CONTRACTOR SHALL MAKE ALL REQUIRED MODIFICATIONS TO PROVIDE A COMPLETE AND OPERATIONAL MECHANICAL SYSTEM. MAJOR MODIFICATIONS SHALL BE REVIEWED AND APPROVED BY THE ENGINEER.
6. DO NOT RUN DUCTWORK ABOVE ELECTRICAL PANELS. PROVIDE 4-0" DEEP X 6'-6" HIGH CLEAR ACCESS SPACE IN FRONT OF PANELS. DO NOT RUN DUCTWORK IN ELECTRICAL ROOMS.
7. INSTALLATION OF ALL DUCTWORK SHALL BE COORDINATED WITH STRUCTURAL GIRDERS AND JOIST. DUCTWORK SHALL BE RUN WITHIN STRUCTURE SPACE WHERE SHOWN ON THE PLANS.
8. COORDINATE ALL FLOOR, CEILING, AND ROOF PENETRATIONS WITH THE STRUCTURAL PLANS. MAINTAIN DUCTWORK TIGHT TO THE STRUCTURE. OFFSET INTO THE JOIST SPACE WHERE SHOWN ON THE PLANS.
9. REFER TO CEILING DIFFUSER AND RETURN AIR GRILLE DETAIL 1/M3.
10. ALL SUPPLY, RETURN, EXHAUST, AND OUTSIDE AIR DUCTS SHALL BE SHEETMETAL. FLEXIBLE DUCTS CAN BE USED TO CONNECT CEILING DIFFUSERS. ALL DUCTWORK INSTALLED IN THE ATTIC SPACE SHALL BE WRAPPED WITH A MINIMUM OF 2" OF INSULATION IN ADDITION TO THE 1" ACCOUSTICAL LINER IN THE RECTANGULAR SUPPLY AND RETURN AIR DUCTS.
11. ALL PERPENDICULAR DUCTWORK TO THE ROOF TRUSSES SHALL BE INSTALLED AT THE TIME OF TRUSS INSTALLATION.

Mortensen Engineering, Inc.
251 South 800 East
Smithfield, Utah 84335
(435) 770-5534

OWNERSHIP OF DOCUMENTS
These documents, including the designs and ideas incorporated herein, are the property of MORTENSEN ENGINEERING, INC. and shall not be used, in whole or in part, for any other project without written permission.

DATE
June 17, 2022

PROJECT TITLE
Clarkston City Hall
Addition & Remodel Project
25 South Main Street
Clarkston, Utah 84305
Bair Design

SHEET TITLE
MECHANICAL NOTES, SYMBOL LEGEND, & SPECIFICATIONS

PROJECT NUMBER

REVISIONS

SHEET NUMBER
M0

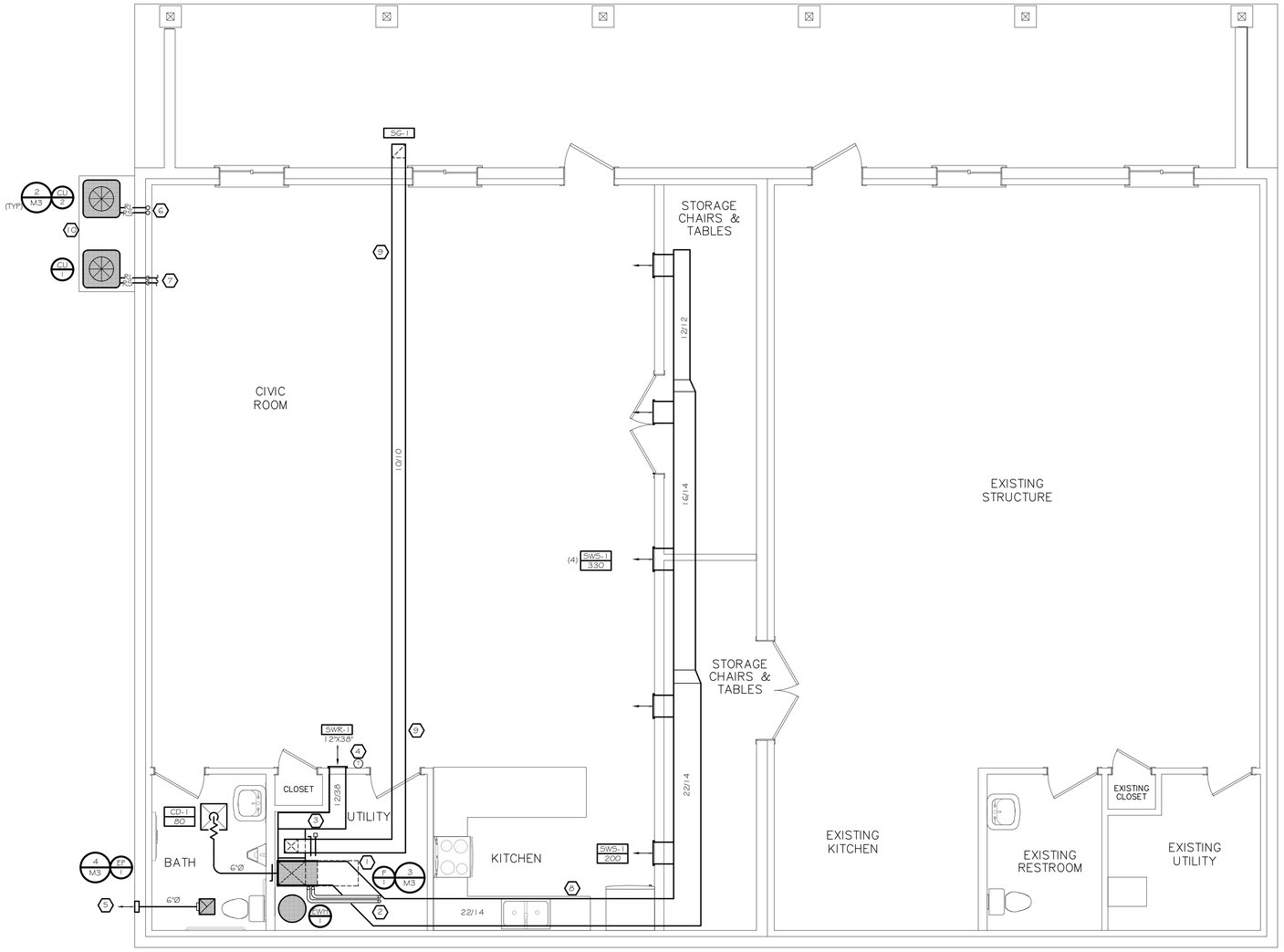

BASEMENT MECHANICAL PLAN

SCALE: 1/4" = 1' - 0"

REFERENCE NOTES

1. EQUIPMENT ACCESS SPACE. KEEP CLEAR OF DUCTS & PIPING.
2. COMBUSTION AIR AND FLUE PIPING UP TO ROOF THROUGH MAIN FLOOR. SEE SHEET M2 FOR CONTINUATION.
3. MOTORIZED DAMPER.
4. PROGRAMMABLE THERMOSTAT.
5. EXHAUST DUCT OUTLET LOUVER.
6. REFRIGERATION PIPING UP TO MAIN FLOOR. SEE SHEET M2 FOR CONTINUATION.
7. EXTEND REFRIGERATION PIPING TO DX COIL.
8. DUCT TO RUN IN SOFFIT SPACE.
9. DUCT TO RUN IN TRUSS SPACE.
10. CONCRETE EQUIPMENT PAD.

Mortensen Engineering, Inc.
251 South 800 East
Smithfield, Utah 84335
(435) 770-5534

OWNERSHIP OF DOCUMENTS
These documents, including the designs and ideas incorporated herein, are the property of MORTENSEN ENGINEERING, INC. and shall not be used, in whole or in part, for any other project without written permission.

LICENSED PROFESSIONAL ENGINEER
No. 176907
JEFFREY R. MORTENSEN
STATE OF UTAH

DATE
June 17, 2022

PROJECT TITLE
Clarkston City Hall
Addition & Remodel Project
25 South Main Street
Clarkston, Utah 84305
Bair Design

SHEET TITLE
BASEMENT
MECHANICAL PLAN

PROJECT NUMBER

REVISIONS

SHEET NUMBER
M1

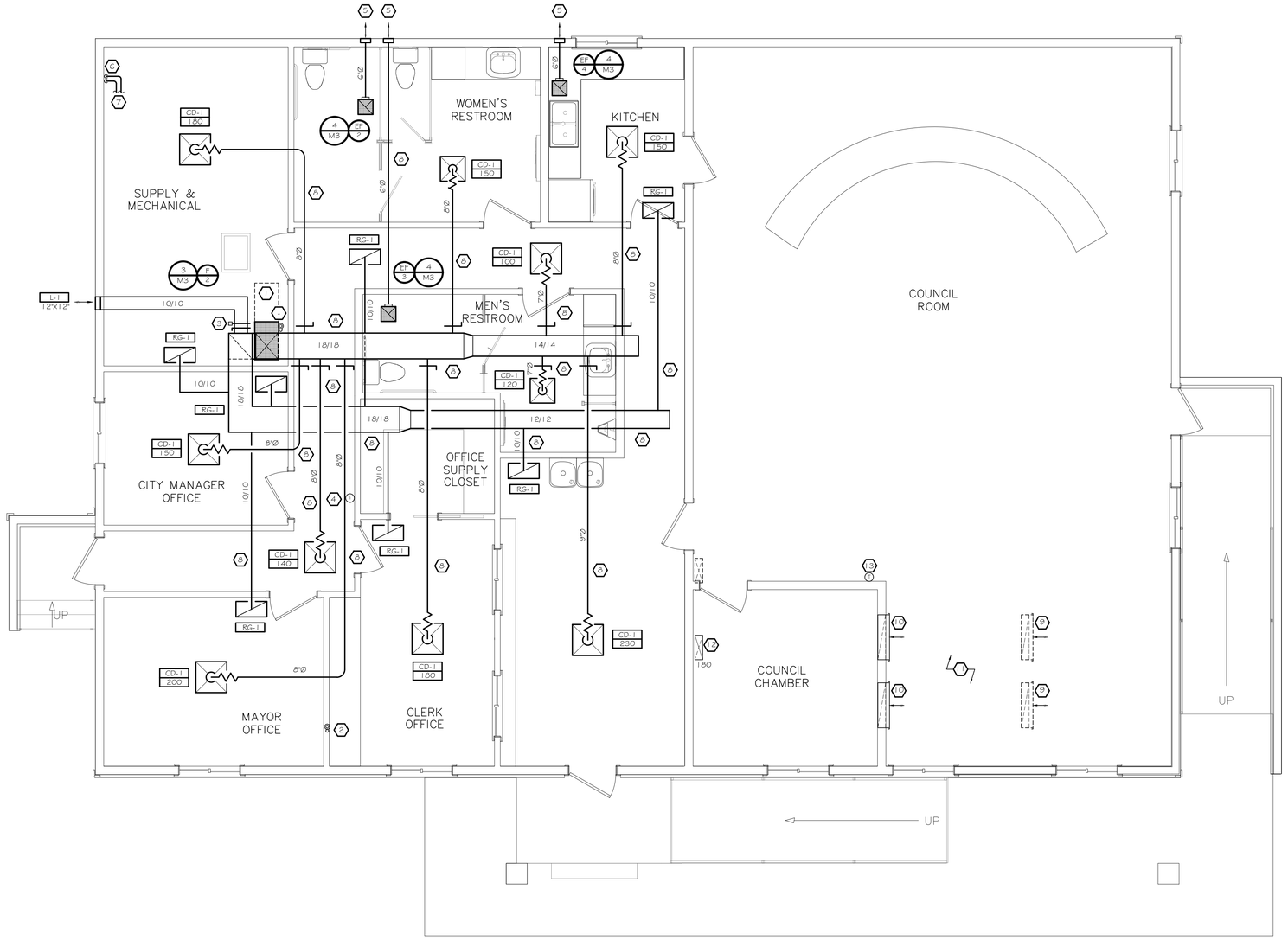

REFERENCE NOTES

1. EQUIPMENT ACCESS SPACE. KEEP CLEAR OF DUCTS & PIPING.
2. COMBUSTION AIR AND FLUE PIPING UP THROUGH ROOF AND AND DOWN TO BASEMENT. PROVIDE CONCENTRIC VENT KIT. SEE SHEET M1 FOR CONTINUATION.
3. MOTORIZED DAMPER.
4. PROGRAMMABLE THERMOSTAT.
5. EXHAUST DUCT OUTLET LOUVER.
6. REFRIGERATION PIPING DOWN TO BASEMENT. SEE SHEET M1 FOR CONTINUATION.
7. EXTEND REFRIGERATION PIPING TO DX COIL.
8. DUCTWORK TO RUN IN ROOF TRUSS SPACE.
9. RELOCATE EXISTING RETURN AIR GRILLES.
10. NEW LOCATION OF RETURN AIR GRILLES. EXTEND EXISTING RETURN AIR DUCTS AS REQUIRED.
11. EXISTING COMMUNICATIONS ROOM AND RESTROOM TO BE REMOVED. REMOVE EXISTING EXHAUST FAN AND DUCT.
12. RELOCATE EXISTING SUPPLY REGISTER TO SERVE NEW ROOM. BALANCE TO AIRFLOW SHOWN.
13. EXISTING THERMOSTAT TO BE RELOCATED.

MAIN FLOOR MECHANICAL PLAN

SCALE: 1/4" = 1' - 0"

Mortensen Engineering, Inc.
251 South 800 East
Smithfield, Utah 84335
(435) 770-5534

OWNERSHIP OF DOCUMENTS
These documents, including the designs and ideas incorporated herein, are the property of MORTENSEN ENGINEERING, INC. and shall not be used, in whole or in part, for any other project without written permission.

LICENSED PROFESSIONAL ENGINEER
No. 176907
JEFFREY R. MORTENSEN
STATE OF UTAH

DATE
June 17, 2022

PROJECT TITLE
Clarkston City Hall
Addition & Remodel Project
25 South Main Street
Clarkston, Utah 84305
Bair Design

SHEET TITLE
MAIN FLOOR
MECHANICAL PLAN

PROJECT NUMBER

REVISIONS

SHEET NUMBER
M2

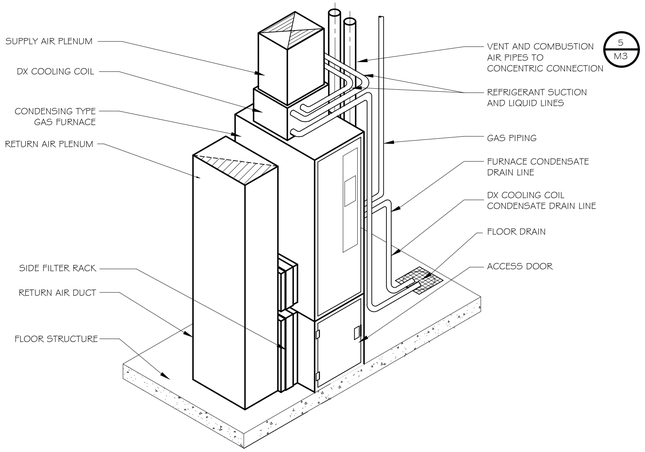

3 M3 UP FLOW FURNACE DETAIL

NOT TO SCALE

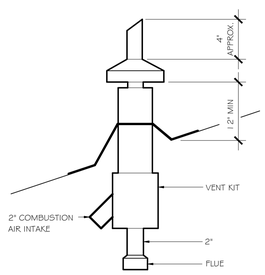

NOTE: INSTALL AS PER MANUFACTURE'S INSTRUCTIONS

5 M3 VENT KIT DETAIL

NOT TO SCALE

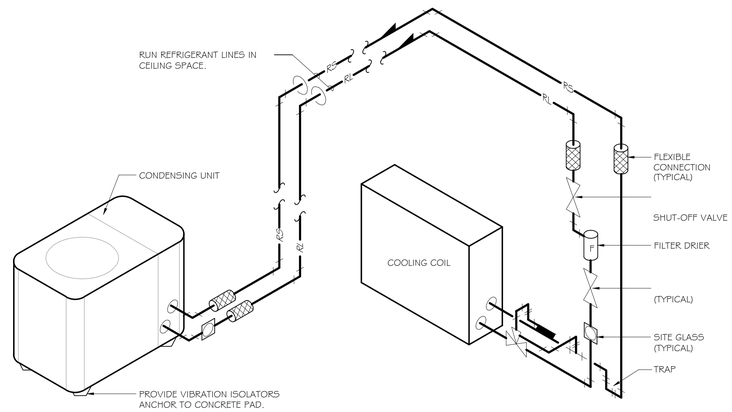

2 M3 TYPICAL REFRIGERANT SCHEME

NOT TO SCALE

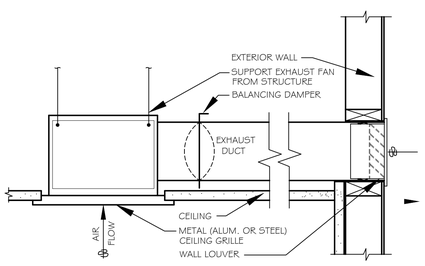

4 M3 CEILING EXHAUST FAN DETAIL

NOT TO SCALE

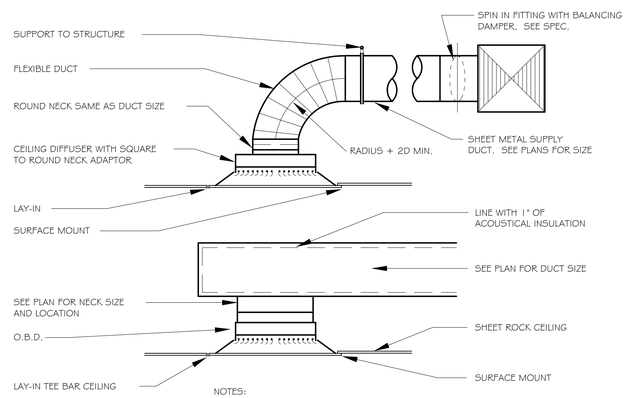

NOTES:
1. EXHAUST AND RETURN GRILLES ARE SIMILAR.
2. EITHER METHOD IS ACCEPTABLE

1 M3 CEILING DIFFUSER DETAIL

NOT TO SCALE

REGISTER AND GRILLE SCHEDULE

SYMBOL	MANUFACTURER	MODEL	DESCRIPTION	MAX. NC	NECK SIZE	MAX. CFM
CD-1	PRICE	SCD	LOUVERED FACE CEILING DIFFUSERS REMOVABLE FACE & CORE. W/O.B.D. FRAME SHALL BE FOR SURFACE OR LAY-I IN MOUNTING AS REQUIRED BY CEILING TYPE. LAY-IN FRAMES SHALL BE 24" X 24", 24" X 12", OR 12" X 12" AS REQ'D. TO FIT CEILING TILE SPACE AVAILABLE. PROVIDE ROUND NECK ADAPTER.	30	6 x 6 8 x 8 9 x 9 10 x 10 6 x 18 12 x 12 15 x 15 18 x 18	125 220 250 320 350 425 625 900
RG-1	PRICE	535	LOUVERED FACE CEILING RETURN AIR UNIT, REMOVABLE FACE & CORE. FRAME SHALL BE FOR SURFACE OR LAY-IN MOUNTING AS REQUIRED BY CEILING TYPE. LAY-IN FRAMES SHALL BE 24" X 24", 24" X 12" OR 12" X 12" AS REQUIRED TO FIT CEILING TILE SPACE AVAILABLE. AIR QUANTITY SHALL MATCH ROOM SUPPLY OR EXHAUST AIR QUANTITY.	30	10 x 10 12 x 12 14 x 14 10 x 22 16 x 16 18 x 18 24 x 24 36 x 24	350 500 550 625 725 900 1300 2200
L-1	AIROLITE	K6774	WALL LOUVER. STATIONARY 4" THICK 45 BLADE 12 GA. EXT. ALUMINUM BLADES, 8 GA. EXT. JAMBS. CHANNEL FRAME, BRONZE ANODIZED FINISH WITH BIRD SCREEN. COLOR BY ARCHITECT.	30	SEE PLANS	
SG-1	HART & COOLEY	RH45	LOUVERED FACE SOFFIT GRILLE PAINTED ALUMINUM CONSTRUCTION WITH INSECT SCREEN FOR SURFACE INSTALLATION.	30	12 x 6 12 X 12 18 x 12 18 x 18	250 500 750 1125
SWS-1	PRICE	510	SIDEWALL SUPPLY DIFFUSER. DOUBLE DEFLECTION SUPPLY REGISTER. VERTICAL FRONT WITH HORIZONTAL REAR DEFLECTION VANES SPACED AT 3/4" O.C. ADJUSTABLE. COMPLETE W/ O.B.D.	30	10 x 8 12 x 8 16 x 8 20 x 8	350 500 750 1000
SWR-1	PRICE	91L	HEAVY DUTY SIDEWALL RETURN AIR GRILLE. STATIONARY HORIZONTAL DEFLECTION VANES SPACED AT 1/2" O.C. 1-1/4" FLANGE. INSTALL INTERMEDIATE SUPPORT CHANNELS. FRAME TO BE MADE OF 16 GAUGE STEEL.	30	SEE PLANS	

FURNACE SCHEDULE

SYMBOL	MANUFACTURER & MODEL NO.	FUEL TYPE	BTU INPUT	BTU OUTPUT	CFM	MINIMUM OUTSIDE AIR CFM	HP	SP	VOLTS/PHASE CYCLE	COIL MODEL NO.	COMMENTS
F 1	YORK TM9E	NAT. GAS	80,000	76,000	1600	320	1/2	0.8	115/1/60	-	(1)(2)(3)(4)
F 2	YORK TM9E	NAT. GAS	80,000	76,000	1600	320	1/2	0.8	115/1/60	-	(1)(2)(3)(4)

(1) RATINGS BASED ON 4600' ELEVATION.
(2) PROVIDE 7-DAY PROGRAMMABLE THERMOSTAT WITH AUTOMATIC HEATING AND COOLING CHANGEOVER
(3) PROVIDE BOTTOM RETURN AND SIDE PLENUM CONNECTIONS, FILTER HOUSING, AND CONCENTRIC VENT KIT..
(4) FURNACE, COIL, AND CONDENSING UNIT SHALL BE BY THE SAME MANUFACTURER.

CONDENSING UNIT SCHEDULE

SYMBOL	MANUFACTURER & MODEL	BTU CAPACITY	REFRIGERANT TYPE	VOLTS/PHASE/CYCLES	MCA	SEER	COMMENTS
CU 1	YORK YCE48	48,000	R-410A	208/1/60Hz	25.7	13	(1)(2)(3)(4)(5))(6)
CU 2	YORK YCE48	48,000	R-410A	208/1/60Hz	25.7	13	(1)(2)(3)(4)(5))(6)

(1) ALL CONDITIONS AT 4600' ELEVATION.
(2) 95°F. AMBIENT - 40 SST.
(3) UNIT COMPLETE WITH STARTER.
(4) FURNACE, DX EVAPORATOR, AND CONDENSING UNIT SHALL BE COORDINATED TO PROVIDE A MATCHED COIL / CU SYSTEM.
(5) VERIFY VOLTAGE AND PHASE AVAILABLE WITH ELECTRICAL CONTRACTOR PRIOR TO ORDERING OF ANY EQUIPMENT.
(6) SIZE REFRIGERANT PIPING AS PER MANUFACTURER'S RECOMMENDATIONS.

EXHAUST FAN SCHEDULE

SYMBOL	MANUFACTURER	MODEL	CFM	STATIC PRESSURE IN. WG.	H.P.	RPM	VOLTS/PHASE/CYCLE	COMMENTS
EF 1	GREENHECK	CEILING SP-A190	100	0.375	113 WATTS	1400	115/1/60	(1)(2)(3)
EF 2	GREENHECK	CEILING SP-A250	200	0.375	84 WATTS	1000	115/1/60	(1)(2)(3)
EF 3	GREENHECK	CEILING SP-A250	200	0.375	84 WATTS	1000	115/1/60	(1)(2)(3)
EF 4	GREENHECK	CEILING SP-A250	200	0.375	84 WATTS	1000	115/1/60	(1)(2)(3)

(1) ALL CAPACITIES AT 4600 FT. ELEVATION.
(2) CEILING EXHAUST FAN PROVIDE GRAVITY BACKDRAFT DAMPER, INTEGRAL THERMAL OVERLOAD PROTECTION AND VARIABLE SPEED CONTROL.
(3) ON-OFF SWITCH BY ELECT.

Mortensen Engineering, Inc.
251 South 800 East
Smithfield, Utah 84335
(435) 770-5534

OWNERSHIP OF DOCUMENTS
These documents, including the designs and ideas incorporated herein, are the property of MORTENSEN ENGINEERING, INC. and shall not be used, in whole or in part, for any other project without written permission.

LICENSED PROFESSIONAL ENGINEER No. 176901 JEFFREY R. MORTENSEN STATE OF UTAH

DATE
June 17, 2022

PROJECT TITLE
Clarkston City Hall
Addition & Remodel Project
25 South Main Street
Clarkston, Utah 84305
Bair Design

SHEET TITLE
MECHANICAL DETAILS & SCHEDULES

PROJECT NUMBER

REVISIONS

SHEET NUMBER
M3

PLUMBING SYMBOL LEGEND

SOIL, WASTE-ABOVE GRADE	
SOIL, WASTE-BELOW GRADE	
VENT	
COLD WATER	
HOT WATER	
HOT WATER CIRCULATE	
GAS	G
RAIN WATER-ABOVE GRADE	RW
RAIN WATER-BELOW GRADE	RW
OVERFLOW RAIN WATER-ABOVE GRADE	ORW
DRAIN LINE	D
WALL HYDRANT	W.H.
HOSE BIBB	H.B.
CLEANOUT TO GRADE	C.O.T.G.
FLOOR CLEANOUT	F.C.O.
WALL CLEANOUT	W.C.O.
SHUT OFF VALVE	
CHECK VALVE	
ANGLE VALVE	
VENTURI	
BALANCING OR PLUG COCK	
FLOW SETTER	
GAS COCK	
BUTTERFLY VALVE	
BALL VALVE	
RELIEF VALVE	
PRESSURE REDUCING VALVE	
GAUGE COCK	
STRAINER	
FLEXIBLE CONNECTION	
PRESSURE GAUGE	
THERMOMETER	
REDUCER CONCENTRIC	
REDUCER ECCENTRIC	
90° ELBOW UP	
90° ELBOW DOWN	
90° TEE UP	
90° TEE DOWN	
UNION	
CAPPED PIPE	
ANCHOR	

PLUMBING ABREVIATIONS

BHP	BRAKE HORSE POWER	NTS	NOT TO SCALE
BTU	BRITISH THERMAL UNIT	NO	NUMBER
CLG	COOLING	OZ	OUNCE
CW	COLD WATER	PSI	POUNDS PER SQUARE INCH
DP	DEPTH OR DEEP	PSIA	PSI ABSOLUTE
ID	INSIDE DIAMTER	PSIG	PSI GAUGE
OD	OUTSIDE DIAMTER	PRESS	PRESSURE
(E)	EXISTING	PD	PRESSURE DROP
EFF	EFFICIENCY	RECIRC	RECIRCULATE
ELEV	ELEVATION	RPM	REVOLUTIONS PER MINUTE
(F)	FUTURE	RW	RAIN WATER
F	FARENHEIT	SCW	SOFT COLD WATER
FC	FLEXIBLE CONNECTION	SF	SAFETY FACTOR
FT	FEET	SL	SEA LEVEL
GAL	GALLON(S)	SPEC	SPECIFICATION(S)
GPH	GALLONS PER HOUR	SQ	SQUARE
GPM	GALLONS PER MINUTE	STD	STANDARD
HD	HEAD	SPLY	SUPPLY
HT	HEIGHT	TEMP	TEMPERATURE
HTG	HEATING	TD	TEMP. DROP OR DIFF.
HP	HORSE POWER	R	THERMAL RESITANCE
HW	HOT WATER	T	TIME
LG	LENGTH	VAC	VACUUM
MAX	MAXIMUM	VENT	VENT, VENTILATION
MIN	MINIMUM	VERT	VERTICAL
NO	NORMALLY OPEN	VOL	VOLUME
NC	NORMALLY CLOSED	WTR	WATER
N/A	NOT APPLICABLE	WT	WEIGHT
NIC	NOT IN CONTRACT	YR	YEAR

PLUMBING SPECIFICATIONS ③

FIRE SPRINKLER SYSTEM

A. NOT INCLUDED IN THIS CONTRACT.

PLUMBING SPECIALTIES

A. PROVIDE AND INSTALL WATER PRESSURE REGULATING VALVE RATED FOR INITIAL WORKING PRESSURE OF 150 PSIG WITH INLET AND OUTLET SHUTOFF VALVES, PRESSURE GAUGE, AND DRAIN VALVE.

B. PROVIDE AND INSTALL CLEANOUTS AND COVER PLATES WHERE INDICATED ON THE DRAWINGS. INSTALL A CLEANOUT AT EACH PLUMBING FIXTURE. CLEANOUT FLOOR COVER PLATES SHALL BE MOUNTED FLUSH WITH THE FLOOR. COORDINATE CLEANOUT COVER PLATES WITH WALL OR FLOOR SURFACE FINISH.

WATER HEATERS

A. PROVIDE A WATER HEATER AS SHOWN ON THE DRAWINGS THAT COMPLIES WITH ASME BOILER AND PRESSURE VESSEL CODE, UL LISTING, AGA STANDARDS, AND ASHRAE ENERGY STANDARDS.

B. SUBMIT MANUFACTURERS CUTSHEET FOR REVIEW AND APPROVAL INCLUDING MANUFACTURER, TYPE, MODEL NUMBER, CAPACITY, ELECTRICAL REQUIREMENTS, AND OPTIONS.

C. INSTALL WATER HEATER LEVEL AND PLUMB ON CONCRETE EQUIPMENT PAD UNLESS OTHERWISE NOTED. INSTALL WATER HEATER ACCORDING TO THE MANUFACTURER'S INSTALLATION INSTRUCTIONS. ANCHOR WATER HEATER TO EQUIPMENT PAD. INSTALL EARTHQUAKE BRACING SECURE TO STRUCTURAL MEMBERS.

D. INSTALL WATER HEATER WITH RELIEF VALVE, SHUTOFF VALVES, UNIONS, THERMOMETERS, DRAIN LINE, GAS CONNECTION, VENT AND RECIRCULATION SYSTEM AS INDICATED ON THE DRAWINGS.

PLUMBING SPECIFICATIONS ②

VALVES

A. PROVIDE AND INSTALL BALL SHUTOFF VALVES WHERE SHOWN ON PLANS FOR LINES 3" AND SMALLER. BALL VALVES SHALL BE MSS SP-110, CLASS 150 BRONZE BODY AND BONNET AND VINYL-COVERED STEEL HANDLE.

B. PROVIDE AND INSTALL BUTTERFLY VALVES WHERE SHOWN ON PLANS FOR LINES 4" AND LARGER. BUTTERFLY VALVES SHALL BE MSS SP-67, ASTM A 126 CAST-IRON BODY AND BONNET WITH EPDM SEALS.

FUEL GAS PIPING

A. COORDINATE INSTALLATION OF GAS YARD LINE AND GAS METER WITH THE GAS COMPANY. WORK TO BE PERFORMED BY THE GAS COMPANY PAID BY THE CONTRACTOR.

B. COMPLY WITH NFPA 54 "NATIONAL FUEL GAS CODE", LOCAL GAS COMPANY REQUIREMENTS, AND ALL OTHER APPLICABLE CODES FOR GAS PIPING MATERIALS, COMPONENTTS, INSTALLATIONS, INSPECTIONS, TESTING, AND PURGING.

C. GAS PIPING SHALL BE SEAMLESS, GRADE B, SCHEDULE 40 BLACK STEEL WITH THREADED FITTINGS.

D. INSTALL SHUTOFF VALVE DOWNSTREAM OF THE GAS METER OUTSIDE OF THE BUILDING.

E. INSTALL 2 PSIG - TO - 4 OZ. GAS PRESSURE REGULATOR WHERE SHOWN ON THE DRAWINGS. INSTALL AND VENT AS REQUIRED BY MANUFACTURERS INSTRUCTIONS.

F. INSTALL GAS SHUTOFF VALVE AT ALL GAS APPLIANCES. CONNECT TO APPLIANCE WITH APPROVED FLEXIBLE CONNECTION. INSTALL TEE FITTING SEDIMENT TRAPS WITHIN 6' OF EACH APPLIANCE.

PLUMBING PIPING

A. WATER DISTRIBUTION PIPING - BELOW GROUND (150 PSIG):
3-1/2" AND SMALLER - USE TYPE K SOFT OR HARD COPPER TUBE WITH CAST COPPER ALLOY BRAZED JOINT PRESSURE FITTINGS.

B. WATER DISTRIBUTION PIPING - ABOVE GROUND (125 PSIG):
3-1/2" AND SMALLER - USE TYPE L HARD COPPER TUBE WITH CAST COPPER ALLOY BRAZED JOINT PRESSURE FITTINGS.

C. WASTE AND VENT PIPING - BELOW GROUND (10-FOOT HEAD OF WATER):

2" TO 6" - USE ACRYLONITRILE-BUTADIENE-STYRENE (ABS) PLASTIC PIPE WITH ABS SOCKET-TYPE DRAIN, WASTE, AND VENT PIPE PATTERN FITTINGS WITH SOLVENT CEMENTED JOINTS.

D. WASTE AND VENT PIPING - ABOVE GROUND (10-FOOT HEAD OF WATER):

2" TO 6" - USE ACRYLONITRILE-BUTADIENE-STYRENE (ABS) PLASTIC PIPE WITH ABS SOCKET-TYPE DRAIN, WASTE, AND VENT PIPE PATTERN FITTINGS WITH SOLVENT CEMENTED JOINTS.

E. STORM DRAINAGE PIPING - ABOVE GROUND (10-FOOT HEAD OF WATER):

2" TO 8" - USE HUB-AND-SPIGOT CAST-IRON SOIL PIPE WITH CAST IRON SOIL PIPE FITTINGS, NEOPRENE RUBBER GASKETS, AND COMPRESSION JOINTS.

F. INSTALL HANGERS FOR HORIZONTAL COPPER AND CAST IRON PIPING WITH THE FOLLOWING MAXIMUM SPACING AND MINIMUM ROD SIZES:

NOM. PIPE SIZE	MAX. SPAN	MIN. ROD DIA.
3/4"	6'	3/8"
1"	6'	3/8"
1-1/2"	6'	3/8"
2"	12'	3/8"
2-1/2"	12'	1/2"
3"	12'	1/2"
3-1/2"	12'	1/2"
4"	12'	5/8"
5"	12'	5/8"
6"	12'	3/4"

SUPPORT VERTICAL PIPE AND TUBING AT EACH FLOOR.

G. SUPPORT HORIZONTAL ABS AND PVC PIPING WITH PIPE HANGERS LOCATED AT 4' MAXIMUM SPAN.

H. CLEAN, FLUSH, AND TEST ALL WATER DISTRIBUTION PIPING TO 1-1/2 TIMES THE OPERATING PRESSURE FOR A TIME PERIOD OF 4 HOURS. PURGE AND DISINFECT POTABLE WATER SYSTEMS WITH A WATER/CHLORINE SOLUTION IN ACCORDANCE WITH THE LOCAL HEALTH CODE REQUIREMENTS. TEST AND SUBMIT SATISFACTORY REPORT PRIOR TO BUILDING OCCUPANCY.

I. CLEAN, FLUSH, AND TEST THE WASTE AND VENT PIPING SYSTEM TO 10 FEET HEAD OF WATER.

PLUMBING FIXTURES

A. PROVIDE AND INSTALL PLUMBING FIXTURES WHERE INDICATED ON THE DRAWINGS FOR A COMPLETE PLUMBING SYSTEM. PROVIDE ALL REQUIRED CARRIERS, SUPPORTS, EQUIPMENT, HANGERS, FITTINGS, TRIM, STOPS, AND ACCESSORIES ASSOCIATED WITH THE PLUMBING FIXTURES. COORDINATE THE COLOR STYLE, COLOR, AND ACCESSORIES OF EACH FIXTURE WITH THE BUILDING OWNER. ALL FIXTURES NOTED AS ACCESSIBLE SHALL COMPLY WITH A.D.A. REQUIREMENTS. COORDINATE ALL ELECTRICAL REQUIREMENTS WITH THE ELECTRICAL SUB-CONTRACTOR. INSTALL ALL PLUMBING FIXTURES PLUMB, LEVEL, AND ACCORDING TO THE MANUFACTURER'S INSTALLATION INSTRUCTIONS. REFER TO THE PLUMBING FIXTURE SCHEDULE.

B. PROVIDE PLUMBING FIXTURES FROM THE FOLLOWING MANUFACTURERS:
- WATER CLOSETS AND URINALS:
  - AMERICAN STANDARD, BRIGGS, CRANE, ELJER, KOHLER SLOAN
- LAVATORIES:
  - ACORN,AMERICAN STANDARD, BRIGGS, CRANE, ELJER, ELKAY, KOHLER, SLOAN
- SINKS AND SERVICE SINKS:
  - AMERICAN STANDARD, BRIGGS, CRANE, ELJER, ELKAY, KOHLER, SLOAN
- DRINKING FOUNTAINS AND WATER COOLERS:
  - ELKAY, HALSEY TAYLOR, HAWS, OASIS, SUNROC
- FLUSHOMETERS:
  - SLOAN, ZURN
- FAUCETS:
  - AMERICAN STANDARD, BRIGGS, CHICAGO, CRANE, DELTA, ELJER, ELKAY, GERBER, KOHLER, MOEN, PRICE PFISTER, SLOAN, SYMMONS, T & S BRASS

C. SUBMIT MANUFACTURERS CUTSHEET FOR REVIEW AND APPROVAL FOR EACH PLUMBING FIXTURE INCLUDING MANUFACTURER, MODEL, STYLE, OPTIONS, AND ACCESSORIES.

PLUMBING SPECIFICATIONS ①

BASIC PLUMBING REQUIREMENTS

A. COMPLY WITH THE REQUIREMENTS OF THE 2018 EDITION OF THE INTERNATIONAL BUILDING CODE (IBC), INTERNATIONAL MECHANICAL CODE (IMC), INTERNATIONAL PLUMBING CODE (IPC), INTERNATIONAL FUEL GAS CODE (IFGC), AND INTERNATIONAL ENERGY CONSERVATION CODE (IECC), AND THE CURRENT NATIONAL ELECTRIC CODE (NEC) INCLUDING ALL STATE AMENDMENTS. COMPLY WITH THE AUTHORITY HAVING JURISDICTION AND ALL APPLICABLE CITY, COUNTY, STATE, AND FEDERAL CODES AND REGULATIONS IN EFFECT AT THE BID DATE.

B. PREPARE AND SUBMIT ELECTRONIC SHOP DRAWINGS FOR ALL PLUMBING FIXTURES, EQUIPMENT, VALVES, AND ACCESSORIES INCLUDING MANUFACTURER'S NAME, CATALOG NUMBER, DESCRIPTION, SIZE, CAPACITY, ELECTRICAL REQUIREMENTS, OPERATION, AND MAINTENANCE INFORMATION. SHOP DRAWINGS SHALL BE REVIEWED AND STAMPED BY THE PLUMBING AND GENERAL CONTRACTOR PRIOR TO ENGINEER'S REVIEW. FIXTURES, EQUIPMENT, ETC. SHALL NOT BE ORDERED UNTIL APPROVED SHOP DRAWINGS HAVE BEEN RECEIVED.

C. PREPARE COORDINATION DRAWINGS DETAILING ALL MAJOR EQUIPMENT AND SYSTEMS. INCLUDE EQUIPMENT CONNECTIONS, CLEARANCES, FIRE-RATED WALL OR FLOOR PENETRATIONS, CONCRETE PADS, AND SUPPORT DETAILS IN COORDINATION DRAWINGS. COORDINATION DRAWINGS SHALL BE IN CONJUNCTION WITH THE MECHANICAL, FIRE SPRINKLER (WHERE REQUIRED), ELECTRICAL, REFLECTED CEILINGS, AND ALL OTHER APPLICABLE TRADES.

D. PREPARE RECORD "AS BUILT" DOCUMENTS INCLUDING ALL CHANGES FROM THE ORIGINAL BID DOCUMENTS. SUBMIT COMPLETE "AS BUILT" DOCUMENTS AT THE COMPLETION OF THE PROJECT.

E. PROVIDE 2 SETS OF OPERATION AND MAINTENANCE (O & M) MANUALS CONTAINING INFORMATION FOR ALL MECHANICAL AND PLUMBING SYSTEMS. THE MANUALS SHALL CONTAIN A LIST OF ALL SUB-CONTRACTORS AND SUPPLIERS, EQUIPMENT CUT SHEETS, START-UP INFORMATION, BALANCING REPORTS, AND MAINTENANCE REQUIREMENTS. THE MANUALS SHALL BE HARD BACKED 3-RING BINDERS WITH THE PROJECT LABELED ON THE COVER AND SPLINE.

F. INSTALL ALL PLUMBING EQUIPMENT AND MATERIALS IN COORDINATION WITH ALL OTHER TRADES. VERIFY ALL ELECTRICAL CONNECTIONS WITH THE ELECTRICAL CONTRACTOR PRIOR TO INSTALLATION.

G. PROVIDE AND INSTALL ACCESS DOORS WHERE EQUIPMENT OR VALVES ARE CONCEALED BEHIND FINISHED SURFACES.

H. PROVIDE FACTORY-AUTHORIZED EQUIPMENT START-UP, COMMISSIONING, AND TRAINING OF ALL PLUMBING EQUIPMENT.

I. INSTALL ALL SYSTEMS, MATERIALS, AND EQUIPMENT LEVEL AND PLUMB, PARALLEL AND PERPENDICULAR TO OTHER BUILDING SYSTEMS AND COMPONENTS. INSTALL ALL PIPING FREE FROM SAGS AND BENDS AND AT THE SLOPE INDICATED (WHERE REQUIRED). INSTALL PIPING AND EQUIPMENT TO PROVIDE THE MAXIMUM POSSIBLE HEADROOM.

J. ALL WORK SHALL BE PERFORMED BY CERTIFIED AND SKILLED WORKERS WITH PRIOR EXPERIENCE IN THEIR PARTICULAR TRADE.

K. THE PLUMBING SUB-CONTRACTOR SHALL PROVIDE WARRANTY OF THE ENTIRE PLUMBING SYSTEM FOR A PERIOD OF ONE YEAR. INCLUDE THE WARRANTY AND ALL OTHER GUARANTEES AND WARRANTIES IN THE OPERATION AND MAINTENANCE MANUAL.

L. THE CONTRACTOR SHALL REPAIR OR REPLACE ALL DAMAGED PIPING, EQUIPMENT, OR OTHER DAMAGE DURING CONSTRUCTION.

M. PROVIDE AND INSTALL ALL PLUMBING EQUIPMENT, PIPING, FIXTURE, AND ACCESSORIES IN STRICT ACCORDANCE WITH THE MANUFACTURER'S INSTALLATION INSTRUCTIONS. PROVIDE ALL FITTINGS, VALVES, TRANSITIONS, AND OTHER DEVICES AS REQUIRED FOR A COMPLETE AND OPERATIONAL PLUMBING SYSTEM.

BASIC PLUMBING MATERIALS AND METHODS

A. ALL PIPE AND PIPE FITTINGS SHALL BE NEW AND SHALL BE AMERICAN MADE WITH APPROVED LABELS. DELIVER, STORE, AND PROTECT PIPING DURING CONSTRUCTION FROM DAMAGE, DIRT, AND MOISTURE.

B. PROVIDE AND INSTALL DIELECTRIC FITTINGS AND FLEXIBLE CONNECTORS WERE REQUIRED FOR PROPER SYSTEM FLUID, PRESSURE, AND TEMPERATURE.

C. PROVIDE PIPE ESCUTCHEONS FOR ALL EXPOSED WALL AND CEILING PENETRATIONS. PROVIDE COVER PLATES FOR ALL FLOOR AND WALL CLEANOUTS.

D. SEAL ALL PIPE PENETRATIONS THROUGH WALLS AND FLOORS AIR TIGHT. CAULK ALL FIRE RATED PIPE PENETRATIONS WITH APPROVED FIRE-STOPPING MATERIAL.

E. CUT, CHANNEL, CHASE, AND DRILL FLOORS, WALLS, PARTITIONS, CEILINGS, AND OTHER SURFACES NECESSARY FOR PROPER INSTALLATION. REPAIR AS REQUIRED TO MATCH ADJACENT SURFACES.

HANGERS AND SUPPORTS

A. PROVIDE AND INSTALL PIPE SUPPORTS AND HANGERS AS REQUIRED FOR ALL PIPING AND EQUIPMENT ACCORDING TO MANUFACUTERS STANDARDIZATION SOCIETY (MSS) STANDARDS.

VIBRATION ISOLATION AND SEISMIC CONTROLS

A. PROVIDE AND INSTALL VIBRATION ISOLATORS, FLEXIBLE CONNECTIONS, ISOLATION PADS, AND OTHER EQUIPMENT TO PREVENT NOISE AND VIBRATION TRANSMISSION.

PIPING AND EQUIPMENT IDENTIFICATION

A. PROVIDE EQUIPMENT PIPE AND EQUIPMENT TAGS, LABELS, AND IDENTIFICATION INDICATING FLOW DIRECTION, AREA SERVED, SYSTEM TYPE AND OTHER IDENDIFYING INFORMATION. COMPLY WITH ASME PIPING AND EQUIPMENT IDENTIFICATION STANDARDS.

INSULATION

A. PROVIDE AND INSTALL GLASS FIBER PREFORMED PIPE INSULATION WITH VAPOR PROOF COATING ACCORDING TO THE FOLLOWING SCHEDULE:
- DOMESTIC COLD WATER PIPING:
  - 1/2" TO 2" PIPE SIZE - 3/4" INSULATION
  - 2" AND ABOVE - 1" INSULATION
- DOMESTIC HOT WATER AND RECIRCULATED HOT WATER PIPING:
  - 1/2" TO 2" PIPE SIZE - 1" INSULATION
  - 2" AND ABOVE - 1-1/2" INSULATION
- RAIN WATER PIPING AND PLUMBING VENTS (WITHIN 6' OF ROOF):
  - 1/2" TO 2" PIPE SIZE - 3/4" INSULATION
  - 2" AND ABOVE - 1" INSULATION

B. GLASS FIBER INSULATION SHALL HAVE A FLAME SPREAD RATING OF 25 OR LESS AND A SMOKE DEVELOPED RATING OF 50 OR LESS.

C. SEAL ALL ENDS AND JOINTS TO PROVIDE A COMPLETELY SEALED INSULATION SYSTEM. PROVIDE COVER HANGER INSERTS AND SHIELDS WITH JACKET MATERIAL MATCHING ADJACENT PIPE INSULATION.

D. PROVIDE SNAP ON INSULATION KIT ON ALL ADA COMPLIANT LAVATORIES AND SINKS.

PLUMBING GENERAL NOTES

1. PROVIDE ALL EQUIPMENT, PIPING, MATERIALS, LABOR, PERMITS, AND FEES TO CONSTUCT A COMPLETE AND OPERATIONAL PLUMBING SYSTEM FOR THE ENTIRE PROJECT AS SHOWN ON THE DRAWINGS.
2. COORDINATE THE EXACT LOCATION OF ALL PLUMBING FIXTURES AND DRAINS WITH THE ARCHITECTURAL DRAWINGS AND THE GENERAL CONTRACTOR.
3. COORDINATE ALL WORK WITH THE GENERAL CONTRACTOR, MECHANICAL SUB-CONTRACTOR, ELECTRICAL SUB-CONTRACTOR, AND ALL OTHER TRADES IN THE PROJECT.
4. ALL PLUMBING INFORMATION IS NOT SHOWN ON THE PLUMBING DRAWINGS. COORDINATE ALL PLUMBING WORK WITH THE ARCHITECTURAL, STRUCTURAL, MECHANICAL, CIVIL, AND ELECTRICAL DRAWINGS.
5. PLUMBING PLANS ARE SCHEMATIC IN NATURE AND THEREFORE DO NOT SHOW ALL DROPS, RISERS, AND OFFSETS. THE CONTRACTOR SHALL MAKE ALL REQUIRED MODIFICATIONS TO PROVIDE A COMPLETE AND OPERATIONAL PLUMBING SYSTEM. MAJOR MODIFICATIONS SHALL BE REVIEWED AND APPROVED BY THE ENGINEER.
6. DO NOT RUN PIPING ABOVE ELECTRICAL PANELS. PROVIDE 4'-0" DEEP X 6'6" HIGH CLEAR ACCESS SPACE IN FRONT OF PANELS. DO NOT RUN PIPING IN ELECTRICAL ROOMS.
7. INSTALL ALL PIPING SHOWN IN EXTERIOR WALLS ON THE WARM (ROOM) SIDE OF THE BUILDING INSULATION.
8. INSTALL WATER, GAS, AND VENT PIPING AS HIGH AS POSSIBLE ABOVE THE CEILING UNLESS NOTED OTHERWISE.
9. INSTALL WASTE PIPING BELOW THE FLOOR UNLESS NOTED OTHERWISE.
10. PROVIDE AND INSTALL 2" MINIMUM WASTE PIPE SIZE BELOW GRADE.
11. INSTALL EXTERIOR PIPING 36" MINIMUM BELOW GRADE.
12. INSTALL PLUMBING VENTS A MINIMUM OF 3 FEET ABOVE OR 10 FEET AWAY FROM OUTSIDE AIR INTAKES. COORDINATE WITH THE MECHANICAL SUB-CONTRACTOR.

Mortensen Engineering, Inc.
251 South 830 East
Smithfield, Utah 84335
(435) 770-5534

NORTH

OWNERSHIP OF DOCUMENTS
These documents, including the designs and ideas incorporated herein, are the property of MORTENSEN ENGINEERING, INC. and shall not be used, in whole or in part, for any other project without written permission.

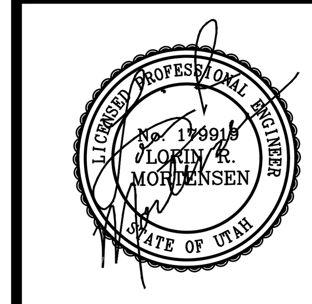

DATE
June 17, 2022

PROJECT TITLE
Clarkston City Hall
Addition & Remodel Project
25 South Main Street
Clarkston, Utah 84305
Bair Design

SHEET TITLE
PLUMBING NOTES, SYMBOL LEGEND, & SPECIFICATIONS

PROJECT NUMBER

REVISIONS

SHEET NUMBER
P0

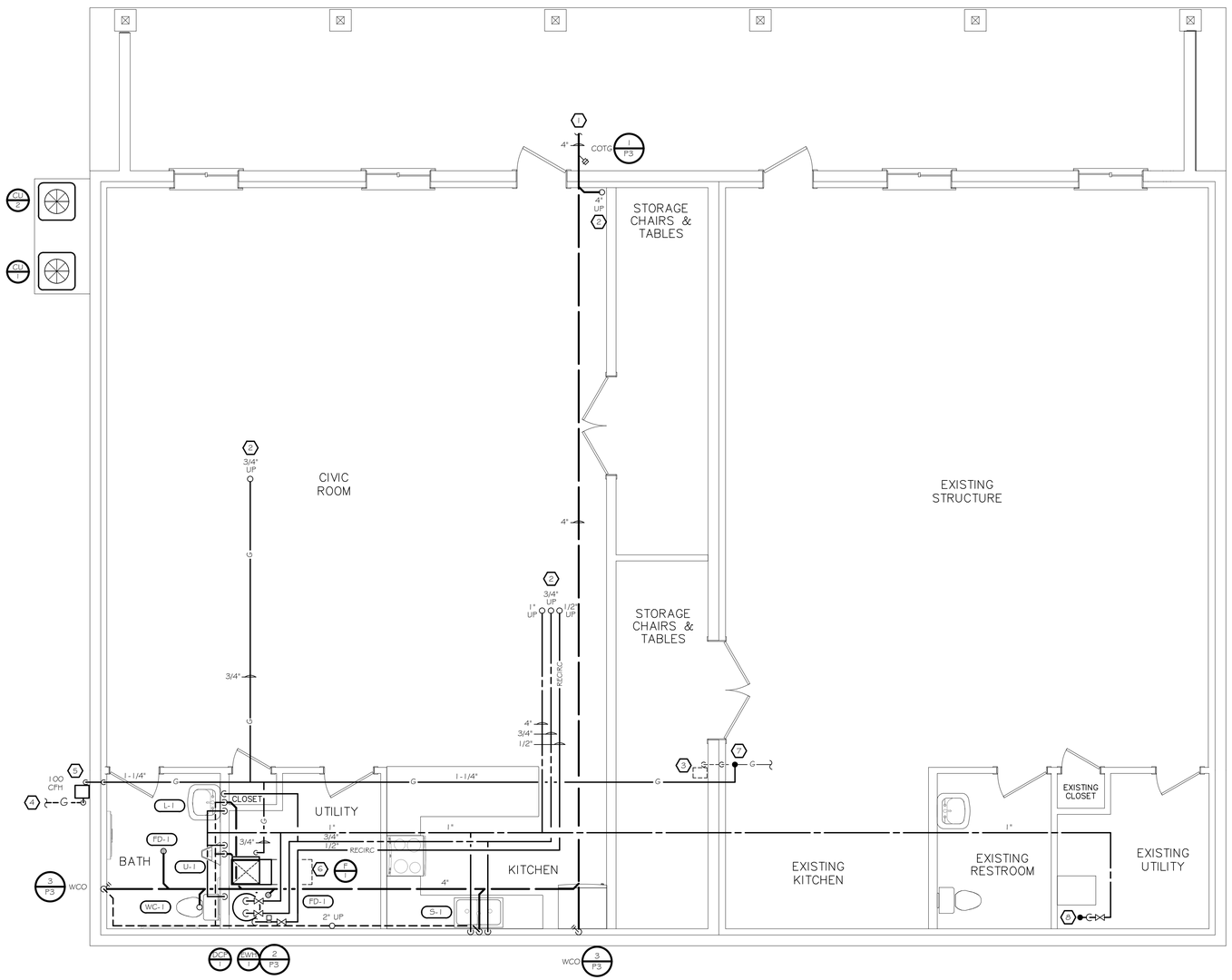

BASEMENT PLUMBING PLAN

SCALE: 1/4" = 1'-0"

REFERENCE NOTES

1. SEE SITE UTILITIES PLAN FOR CONTINUATION.
2. PIPING UP TO MAIN FLOOR. SEE MAIN FLOOR PLUMBING PLAN SHEET P2 FOR CONTINUATION.
3. RELOCATE GAS METER BY GAS COMPANY.
4. GAS YARD PIPING BY GAS COMPANY.
5. 4 OZ. GAS METER BY GAS COMPANY.
6. EQUIPMENT ACCESS SPACE. KEEP CLEAR OF DUCTS & PIPING.
7. CONNECT NEW GAS LINE TO EXISTING. FIELD VERIFY EXACT LOCATION OF EXISTING GAS LINE.
8. CONNECT NEW WATER LINE TO EXISTING. FIELD VERIFY EXACT LOCATION OF EXISTING WATER LINE.

Mortensen Engineering, Inc.
251 South 830 East
Smithfield, Utah 84335
(435) 770-5534

OWNERSHIP OF DOCUMENTS
These documents, including the designs and ideas incorporated herein, are the property of MORTENSEN ENGINEERING, INC. and shall not be used, in whole or in part, for any other project without written permission.

LICENSED PROFESSIONAL ENGINEER No. 176917 JEFFREY R. MORTENSEN STATE OF UTAH

DATE
June 17, 2022

PROJECT TITLE
Clarkston City Hall
Addition & Remodel Project
25 South Main Street
Clarkston, Utah 84305
Bair Design

SHEET TITLE
BASEMENT PLUMBING PLAN

PROJECT NUMBER

REVISIONS

SHEET NUMBER
P1

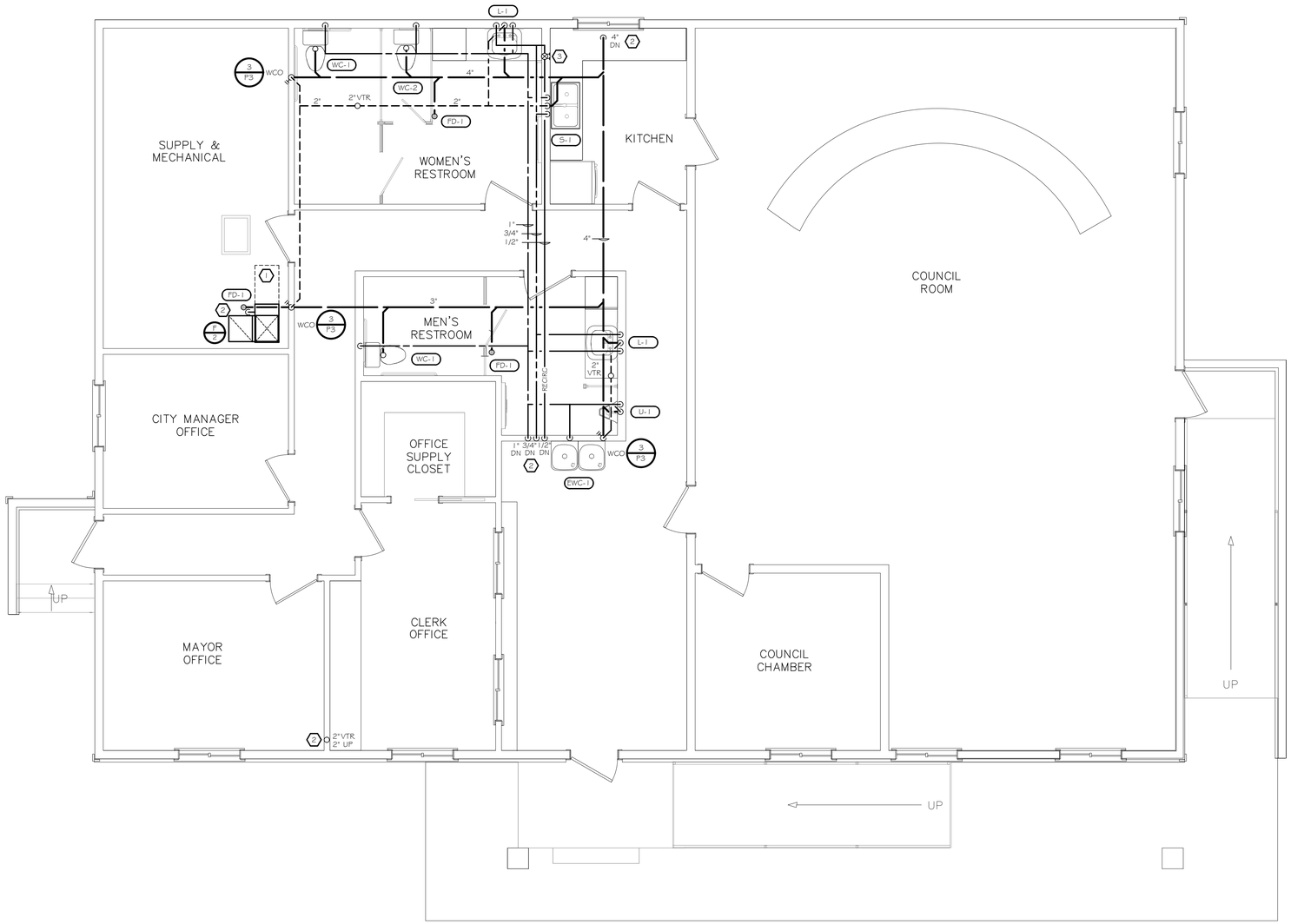

MAIN FLOOR PLUMBING PLAN
SCALE: 1/4" = 1' - 0"

REFERENCE NOTES

1. EQUIPMENT ACCESS SPACE. KEEP CLEAR OF DUCTS & PIPING.
2. PIPING DOWN TO BASEMENT LEVEL. SEE BASEMENT PLAN SHEET P1 FOR CONTINUATION.
3. CIRCUIT SETTER. SET AT 1 GPM.

Mortensen Engineering, Inc.
251 South 800 East
Smithfield, Utah 84335
(435) 770-5534

OWNERSHIP OF DOCUMENTS
These documents, including the designs and ideas incorporated herein, are the property of MORTENSEN ENGINEERING, INC. and shall not be used, in whole or in part, for any other project without written permission.

LICENSED PROFESSIONAL ENGINEER
No. 176907
JEFFREY R. MORTENSEN
STATE OF UTAH

DATE
June 17, 2022

PROJECT TITLE
Clarkston City Hall
Addition & Remodel Project
25 South Main Street
Clarkston, Utah 84305
Bair Design

SHEET TITLE
MAIN FLOOR
PLUMBING PLAN

PROJECT NUMBER

REVISIONS

SHEET NUMBER
P2

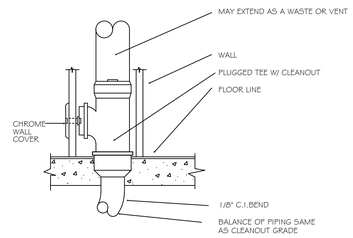

WALL CLEANOUT DETAIL

NOT TO SCALE

3 / P3

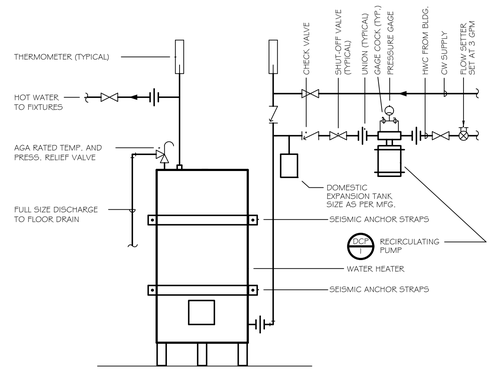

ELECTRIC WATER HEATER DETAIL

NOT TO SCALE

2 / P3

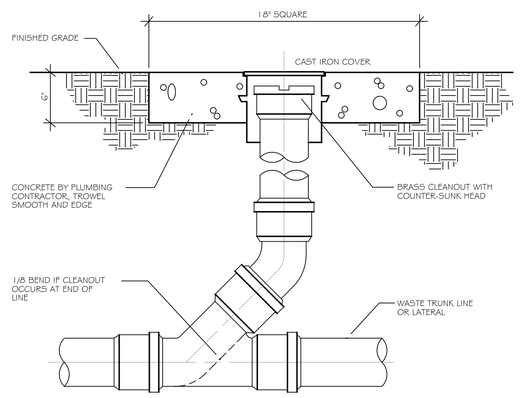

CLEAN OUT TO GRADE DETAIL

NOT TO SCALE

1 / P3

PLUMBING FIXTURE SCHEDULE

FIX. NO.	FIXTURE	TYPE	DESCRIPTION	WASTE	TRAP	VENT	HW	CW
EWC-1	ACCESSIBLE ELECTRIC WATER COOLER	ACCESSIBLE BARRIER-FREE	ACORN AQUA A112108F WALL MOUNTED BARRIER FREE BI-LEVEL WATER COOLER WITH ONE-PIECE STAINLESS STEEL TOP AND RECEPTOR, WELDED STEEL FRAME, AND STEEL PANELS WITH BAKED ENAMEL COATING. 1/4 HP, 115/1/60, BF2 SENSOR BOTTLE FILLER. 8 GPH OF 50 ° F WATER AT 80° F INLET WATER.	1 1/2"	1 1/4"	1 1/4"	-	1/2"
FD-1	FLOOR DRAIN	TOILET ROOMS	SMITH FIGURE 2010-BP CAST IRON BODY AND FLASHING COLLAR WITH PROTECTIVE CAP AND ROUND NICKEL BRONZE ADJUSTABLE STRAINER HEAD WITH SECURED SQUARE HOLE GRATE. DEEP SEAL TRAP.	2"	2"	1 1/2"	-	-
L-1	LAVATORY TOILET ROOM	ACCESSIBLE COUNTER MOUNTED OVAL	KOHLER K-2196-1 PENNINGTON SELF RIMMING VITREOUS CHINA OVAL LAVATORY WITH SINGLE FAUCE HOLE; K-7715 OPEN GRID STRAINER; CHICAGO 2200 SINGLE HOLE LAVATORY WITH 4-3/4" SPOUT, 3/8" COPPER INLET TUBES; E12 2.0 GPM AERATOR. PROVIDE ADA INSULATION KIT ON LINES BELOW LAVATORY. (1)	1 1/2"	1 1/4"	1 1/4"	1/2"	1/2"
S-1	BREAK ROOM SINK	TWO COMPARTMENT SINK	DAYTON DSEW-3321 GAUGE #300 STAINLESS STEEL COUNTERTOP SELF RIMMING SINK. DIMENSIONS: 33"x 21"x 8" WITH (2) FAUCET HOLES ON 4" CENTERS; STRAINER; CLEVELAND CFG FLAGSTONE MODEL 47511 SINGLE HANDLE FAUCET WITH 8" SWING SPOUT, # E3 AERATOR. (1)	2"	1 1/2"	1 1/2"	1/2"	1/2"
U-1	URINAL	WALL HUNG	KOHLER K-25048-ET STANWELL BLOWOUT VITREOUS CHINA WALL HUNG URINAL WITH 3/4" TOP SPUD INLET AND 2" N.P.S. OUTLET. SLOAN 186 OPTIMA BATTERY OPERATED FLUSH VALVE.	2"	-	1 1/2"	-	3/4"
WC-1	WATER CLOSET	ACCESSIBLE FLOOR MOUNTED TANK TYPE	KOHLER K-3481 WELLWORTH COMFORT HEIGHT VITREOUS CHINA INGENIUM FLUSHING SYSTEM. COMFORT HT. BOLT CAPS; PLASTIC OPEN FRONT SEAT; 12" ROUGHING-IN. ACTUATOR SHALL BE ON THE WIDE SIDE OF STALL. 1.6 GAL./ FLUSH MAX.	3"	-	1 1/2"	-	11/2"
WC-2	WATER CLOSET	FLOOR MOUNTED TANK TYPE	KOHLER K-3999 HIGHLINE COMFORT HEIGHT VITREOUS CHINA PRESSURE LITE FLUSHING SYSTEM. COMFORT HT. BOLT CAPS; PLASTIC OPEN FRONT SEAT; 12" ROUGHING-IN. ACTUATOR SHALL BE ON THE WIDE SIDE OF STALL. 1.6 GAL./ FLUSH MAX.	3"	-	1 1/2"	-	11/2"

(1) PROVIDE SYMMONS THERMIXER MODEL S-120 THERMOSTATIC MIXING VALVE BELOW LAVATORIES AND SINK. SET OUTLET AT 110° F. CONNECT TO HOT WATER INLET OF FAUCET.

ELECTRIC DOMESTIC HOT WATER HEATER SCHEDULE

SYMBOL	MANUFACTURERS AND MODEL NO.	TANK CAPACITY GALLONS	INPUT kW	VOLTS/ PHASE/ CYCLE	RECOVERY RATE GPH (1)	WATER TEMP IN/OUT	COMMENTS
EWH 1	RHEEM PERFORMANCE 40	40	(2) 3.8	240/1/60	20	50/120	

DOMESTIC WATER CIRCULATE PUMP SCHEDULE

PUMP NO.	MANUFACTURER AND MODEL NO.	GPM	HEAD FT.	H.P.	RPM	VOLTS/PHASE/ CYCLE	EQUIPMENT OR AREA SERVED	COMMENTS
DCP 1	BELL & GOSSETT SERIES PR9	1	-	1/4	1750	120/1/60	ALL ROOMS & FIXTURES	(1) (2)

(1) ALL BRONZE CONSTRUCTION.
(2) EQUIPPED WITH 24 HOUR, 7 DAY PROGRAMMABLE TIMER.

Mortensen Engineering, Inc.
251 South 800 East
Smithfield, Utah 84335
(435) 770-5534

OWNERSHIP OF DOCUMENTS
These documents, including the designs and ideas incorporated herein, are the property of MORTENSEN ENGINEERING, INC. and shall not be used, in whole or in part, for any other project without written permission.

LICENSED PROFESSIONAL ENGINEER No. 176901 JEFFREY R. MORTENSEN STATE OF UTAH

DATE
June 17, 2022

PROJECT TITLE
Clarkston City Hall
Addition & Remodel Project
25 South Main Street
Clarkston, Utah 84305
Bair Design

SHEET TITLE
PLUMBING DETAILS & SCHEDULES

PROJECT NUMBER

REVISIONS

SHEET NUMBER
P3

GENERAL PROJECT NOTES

1. THE ELECTRICAL CONTRACTOR SHALL HAVE A COORDINATION MEETING WITH THE MECHANICAL CONTRACTOR, CONSTRUCTION SUPERINTENDANT AND ANY OTHER TRADES AS REQUIRED WITHIN SEVEN DAYS OF THE START OF THE JOB TO REVIEW CODE CLEARANCE REQUIREMENTS FOR PANELS, SWITCHES, AND OTHER ELECTRICAL GEAR SPECIFICALLY FOR THIS JOB. RECORD THE MEETING IN THE SUPERINDENT'S LOG. REPORT UNRESOLVED CONFLICTS TO THE ARCHITECT IMMEDIATELY.
2. THE MAIN TELEPHONE SERVICE AS SHOWN ON THE DRAWINGS HAS NOT BEEN COORDINATED WITH THE TELEPHONE COMPANY DURING DESIGN. THE CONTRACTOR SHALL VERIFY THE TELEPHONE SERVICE AS SHOWN. NOTIFY THE ENGINEER IF TELEPHONE COMPANY REQUIRES CHANGES FROM THE DRAWING BEFORE INSTALLATION BEGINS.
3. REFER TO MECHANICAL PLANS FOR EXACT LOCATION OF MECHANICAL EQUIPMENT.
4. REFER TO KITCHEN EQUIPMENT PLANS FOR EXACT OUTLET HEIGHT, LOCATION, AND RECEPTACLE NEMA CONFIGURATION.
5. ALL ELECTRICAL INSTALLATIONS TO CONFORM TO THE LATEST NEC AND LOCAL CODES.
6. ALL RECESSED LIGHT FIXTURES MUST CONFORM TO NEC 410 AND IECC 502.4.8. ELECTRICAL CONTRACTOR TO COORDINATE WITH GENERAL CONTRACTOR AS REQUIRED.
7. EXHAUST FANS FURNISHED AND INSTALLED BY MECHANICAL CONTRACTOR, WIRED BY ELECTRICAL CONTRACTOR.
8. MOUNTING HEIGHT OF GENERAL PURPOSE OUTLETS AND SWITCHES SHALL BE 16" TO BOTTOM AND 48" TO TOP RESPECTIVELY UNLESS OTHERWISE NOTED.
9. COORDINATE MOUNTING HEIGHT AND LOCATION OF ALL OUTLETS, SWITCHES, AUXILIARY EQUIPMENT, AND OTHER DEVICES WITH THE ARCHITECTURAL DRAWINGS. PRIOR TO INSTALLATION, REVIEW WITH THE GENERAL CONTRACTOR THE LOCATION OF MILLWORK AS A FINAL CHECK TO PREVENT COVERING OF ELECTRICAL ITEMS.
10. FIXTURE COUNTS SHOWN ON DRAWINGS ARE FOR REFERENCE ONLY. CONTRACTOR IS RESPONSIBLE TO VERIFY FIXTURE COUNTS AS PART OF BIDDING PROCESS.
11. A GFI OUTLET SHALL BE INSTALLED AT EACH LOCATION DESIGNATED BY "GFI" ON THE DRAWINGS.
12. DO NOT INSTALL ELECTRICAL BOXES BACK-TO-BACK IN PARTITION WALLS. LOCATE DEVICES ON OPPOSITE SIDES OF STUD OR PROVIDE MINIMUM 12" HORIZONTAL SEPARATION.
13. ELECTRICAL CONTRACTOR SHALL VERIFY CEILING THICKNESSES AND USE CEILING TRIM EXTENDERS ON DOWNLIGHTS AS REQUIRED.
14. ELECTRICAL CONTRACTOR SHALL COORDINATE THE ROUTING OF CONDENSATE LINES ON MECHANICAL PADS WITH THE MECHANICAL CONTRACTOR. WIREWAYS AND DISCONNECTS REQUIRE 3-FEET FRONTAL CLEARANCE AND A MINIMUM 30" WIDTH CLEARANCE, OR THE WIDTH OF THE UNIT, WHICHEVER IS GREATER.
15. FIELD MARK SERVICE EQUIPMENT FOR AVAILABLE FAULT CURRENT AND CALCULATION DATE PER NEC 110.24(A)
16. PROVIDE SAFETY DISCONNECTS AS REQUIRED AT ALL CONNECTIONS TO MECHANICAL EQUIPMENT. PROVIDE FUSING AND RATINGS PER NAMEPLATE INFORMATION OF EQUIPMENT SERVED.
17. THE ELECTRICAL CONTRACTOR SHALL BE RESPONSIBLE TO FIELD VERIFY ALL PANEL CLEARANCES PER NEC 110.26 AND NOTIFY ALL OTHER TRADES ON THE JOB OF THESE CODE REQUIREMENTS.
18. DISCONNECT SWITCHES ARE SHOWN IN APPROXIMATE LOCATIONS ONLY. CONTRACTOR SHALL FIELD VERIFY LOCATION OF ALL ELECTRICAL SWITCHES AND MOTOR CONTROL FOR PROPER CODE CLEARANCES. NOTIFY ARCHITECT IMMEDIATELY OF ANY CONFLICTS WITH OTHER TRADES REGARDING PROPER EQUIPMENT CLEARANCES.
19. CIRCUIT WIRE SIZES MUST, AT MINIMUM, MATCH BRANCH CIRCUIT BREAKERS PER NEC. VERIFY WITH PANEL SCHEDULES BEFORE PULLING WIRE.
20. PANEL INDEXES SHALL INCLUDE ALL PERTINENT INFORMATION ON THE PANEL SCHEDULES INCLUDING INFORMATION ON LIGHTS AND OUTLETS. DO NOT SIMPLY COPY THE CIRCUIT DESCRIPTION COLUMN. INDEXES TO BE TYPEWRITTEN.
21. FIELD VERIFY MOUNTING OF SURFACE FIXTURES SHOWN IN CONTINUOUS ROWS. MAKE ADJUSTMENTS SIDEWAYS OR UNDER OBSTRUCTIONS AS REQUIRED AND PROVIDE NECESSARY RACEWAY CONNECTIONS.
22. PENDANT FIXTURES SHALL HAVE SEISMIC RATED PENDANT CONNECTIONS AND SWIVEL JOINTS.
23. PROVIDE NEUTRAL CONNECTION TO 208/240/480V, SINGLE-PHASE EQUIPMENT. RUN SEPARATE GROUND WIRE TO ALL OUTDOOR UNITS AND BOND TO THE EQUIPMENT GROUND LUG.
24. BEFORE RUNNING CONDUITS, PLACING OUTLETS OR ORDERING EQUIPMENT, THE CONTRACTOR SHALL REVIEW THE SPECIFICATIONS AND DESIGN AND SHOP DRAWINGS OF THE OTHER TRADES SERVED BY THE CONDUIT, OUTLETS, AND/OR EQUIPMENT.
25. ALL ELECTRICAL EQUIPMENT SHALL BE LOCATED SO AS NOT TO INTERFERE WITH WOOD TRIM AND MOLDINGS. THE ELECTRICAL CONTRACTOR SHALL REVIEW FINISH SCHEDULES AND ARCHITECTURAL DETAILS BEFORE ROUGH-IN OF OUTLET OR SWITCH BOXES TO PREVENT BOXES AND PLATES FROM BEING PLACED BEHIND OR IN TRIMS AND MOLDINGS. REFER SPECIAL CONDITIONS TO ARCHITECT PRIOR TO ROUGH-IN.
26. THE ELECTRICAL CONTRACTOR SHALL RUN BRANCH CIRCUIT RACEWAYS AND CABLES IN OPEN CEILING AND ATTIC SPACES IN A NEAT AND WORKMANLIKE MANNER SO AS TO CONSERVE OPEN SPACES AS MUCH AS POSSIBLE. HVAC DUCTWORK AND PLUMBING SHALL HAVE LOCATION PRIORITY OVER BRANCH CIRCUIT CONDUIT RUNS.
27. WHERE LIGHT FIXTURES AS SPECIFIED AS COLOR PER ARCHITECT, THIS SHALL BE INTERPRETED AS A NON-STANDARD COLOR
28. THE CONTRACTOR SHALL PROVIDE A WIRE MESH COVER OVER ALL RECESSED LIGHTS TO KEEP BLOWN IN INSULATION AT LEAST THREE INCHES AWAY FROM THE FIXTURE HOUSING.
29. THE CLARITY OF RECORD DRAWING CHANGES MADE BY THE CONTRACTOR SHALL BE EQUAL TO THE ORIGINAL DRAWINGS AS JUDGED BY THE ARCHITECT OR THE RECORD SET WILL BE RETURNED TO THE CONTRACTOR FOR CLARIFICATION.
30. DO NOT SCALE ELECTRICAL FLOOR PLANS. SEE ARCHITECTURAL DRAWINGS FOR ACCURATE DIMENSIONS AND FLOOR PLANS.
31. ELECTRICAL CONTRACTOR SHALL CONTACT POWER COMPANY AND TELEPHONE COMPANY WITHIN THE FIRST WEEK OF THE START OF CONSTRUCTION AND NOTIFY THEM OF THE PROBABLE DATE WHEN THE NEW ELECTRICAL AND/OR TELEPHONE SERVICE CONNECTION WILL BE NEEDED.
32. ALL CONVENIENCE OUTLETS MUST BE MOUNTED FLUSH WITH THE COVER PLATE AND SECURED FIRMLY TO THE OUTLET BOX.
33. THE ELECTRICAL CONTRACTOR SHALL BE RESPONSIBLE TO REVIEW ALL SWITCH LOCATIONS WITH THE GENERAL CONTRACTOR PRIOR TO ROUGH-IN TO PREVENT ANY SWITCHES FROM BEING LOCATED ON THE WRONG SIDE OF THE DOOR.
34. THE BOTTOM OF WALL MOUNTED FIXTURES MUST BE A MINIMUM OF 6'-8" AFF UNLESS FIXTURES ARE ADA COMPLIANT.
35. IDENTIFY ALL OUTLET COVER PLATES WITH THE PANEL AND CIRCUIT NUMBER.
36. PROVIDE AN EQUIPMENT GROUNDING CONDUCTOR, PULLED INTO THE CONDUIT WITH THE PHASE CONDUCTOR, IN ALL SERVICE, FEEDER, AND BRANCH CIRCUITS.
37. PROVIDE A NEUTRAL CONDUCTOR FOR EACH BREAKER TRIP HANDLE. NEUTRALS SHALL NOT BE SHARED BETWEEN BRANCH CIRCUITS.
38. ALL CIRCUITS TO BE MINIMUM #12 CU IN MINIMUM 3/4" CONDUIT UNLESS OTHERWISE NOTED.
39. MC CABLE IS AN APPROVED ALTERNATE TO CONDUCTORS IN CONDUIT FOR BRANCH CIRCUIT WIRING RUNS BETWEEN DEVICES WHERE IT IS CONCEALED IN BUILDING FINISHES.
40. DO NOT INSTALL MORE THAN THREE PHASE CONDUCTORS IN ANY HOME-RUN CONDUITS UNLESS SPECIFICALLY INDICATED ON DRAWINGS.

ELECTRICAL LEGEND

ANNOTATIONS

X / XXX	DETAIL CALL-OUT; TOP "X" REFERS TO DETAIL NUMBER & BOTTOM "XXX" REFERS TO SHEET NUMBER
#	KEYED NOTE CALLOUT
#-#	EQUIPMENT CALLOUT
#-#	KITCHEN EQUIPMENT CALLOUT
---- xCDy ---	COMMUNICATIONS RACEWAY: "x" CONDUITS OF "y" DIAMETER

LIGHTING FIXTURES

FIXTURE LUMEN INDICATOR
FIXTURE SIZE INDICATOR — XXX - X.XX (X)
FIXTURE TYPE
FIXTURE ACCESSORY APPEND

	EMERGENCY LIGHT
	BATTERY PACK
	EXIT LIGHT: CEILING - FACE(S) AS SHOWN
	EXIT LIGHT: WALL - FACE(S) AS SHOWN
	EXIT LIGHT: FACE SIDE
	EXIT LIGHT: DIRECTIONAL ARROWS, DOUBLE FACE
	LED RECESSED FIXTURE
	LED STRIP LIGHT
	LED FIXTURE WITH RECESSED J-BOX
	EMERGENCY FIXTURE

LIGHTING CONTROL

GENERAL CONTROLS

S DT	OCCUPANCY SENSOR: DUAL TECHNOLOGY
S VS	OCCUPANCY SENSOR: VACANCY SENSOR FUNCTION
S OS	OCCUPANCY SENSOR: OCCUPANCY SENSOR FUNCTION
S OS/50	OCCUPANCY SENSOR: AUTO ON TO 50%, MANUAL ON TO 100%
S #	OCCUPANCY SENSOR: # INDICATES WATTSTOPPER CAT# FOR COVERAGE PATTERN OR EQUIVALENT AS SPECIFIED
P	PHOTOCELL
	PUSH BUTTON

LOCAL CONTROLS

$X	SINGLE POLE SWITCH; "x" INDICATES SWITCH GROUP
$3	THREE WAY SWITCH
$4	FOUR WAY SWITCH
$K	SWITCH: KEYED
$P	PILOT LIGHT SWITCH
D L	DIMMER SWITCH: LED; 600 W MINIMUM
	WALL MOUNT OCCUPANCY SENSOR: ADAPTIVE TECHNOLOGY
D	DIMMER SWITCH WITH WALL MOUNT OCCUPANCY SENSOR: ADAPTIVE TECHNOLOGY
VS	WALL MOUNT OCCUPANCY SENSOR: VACANCY SENSOR FUNCTION
OS	WALL MOUNT OCCUPANCY SENSOR: OCCUPANCY SENSOR FUNCTION

CENTRAL SYSTEM CONTROLS
(SEE LIGHTING CONTROL SCHEDULES FOR COMPLETE INFORMATION)

$ LSX/SY	DIGITAL LIGHTING CONTROL TOGGLE; SX = SWITCH CONTROL TYPE #1; SY = SWITCH CONTROL TYPE #2; ETC.
S LO#	OCCUPANCY SENSOR: LIGHTING CONTROL SYSTEM; O# = LIGHTING CONTROL TYPE
D LDX/DY	DIGITAL LIGHTING CONTROL DIMMING SWITCH; DX = SWITCH CONTROL TYPE #1; DY = SWITCH CONTROL TYPE #2; ETC.

FIRE ALARM

FACP	FIRE ALARM CONTROL PANEL
FS	FIRE ALARM FLOW SWITCH
TS	FIRE ALARM TAMPER SWITCH
X	FIRE ALARM HORN AND STROBE; "X" = MINIMUM CANDELA RATING
H	FIRE ALARM HORN AND STROBE; WEATHERPROOF RATED
F	FIRE ALARM PULL STATION

POWER AND DISTRIBUTION

	DISTRIBUTION PANEL
	PANELBOARD
	METER / METER SOCKET

ONE-LINE

XA YP	BREAKER : "x" = BREAKER AMPERAGE "y" = QUANTITY OF POLES
	BRANCH PANEL
	BRANCH PANEL WITH MAIN BREAKER
	BRANCH PANEL WITH SUB FEED BREAKER
x	FEEDER SIZE (REFER TO CONDUIT AND CONDUCTOR SCHEDULE UNLESS OTHERWISE NOTED)
	GROUND
M	DIRECT METER
hp	MOTOR : hp = MOTOR HORSEPOWER

BRANCH CIRCUITING

	SIMPLEX OUTLET
	SIMPLEX OUTLET: GROUND FAULT INTERRUPTER
	DUPLEX OUTLET
	FACELESS GFCI PROTECTION DEVICE
	DUPLEX OUTLET: GROUND FAULT INTERRUPTER
WP	DUPLEX OUTLET: WEATHERPROOF
WPIU	DUPLEX OUTLET: WEATHERPROOF-IN-USE COVER
	DOUBLE DUPLEX OUTLET
	DOUBLE DUPLEX OUTLET: GROUND FAULT INTERRUPTER
	SPECIAL OUTLET: SEE PANEL SCHEDULE-
J	JUNCTION BOX
	DISCONNECT; NO OVER-CURRENT PROTECTION
	DISCONNECT WITH OVER-CURRENT PROTECTION (CIRCUIT BREAKER STYLE OR AS SPECIFIED)
$m	MOTOR PROTECTIVE THERMAL SWITCH
	QUANTITY OF CONDUCTORS: SHORT LINES = PHASE /SWITCH, LONG LINES = NEUTRAL
	HOME-RUN
	CIRCUITING: LINE VOLTAGE
	CIRCUITING: CONTROL
	CIRCUITING: LINE VOLTAGE + DIMMING CONTROL

COMMUNICATIONS

	COMMUNICATIONS RACK
----CMJ ----	COMMUNICATIONS RACEWAY; OPEN D-RINGS OR J-HOOKS. SEE DETAILS AND SPECIFICATIONS
	COMMUNICATIONS ENCLOSURE
	TELEVISION OUTLET (4-11/16"sq x 2-3/4"D J-BOX; 5/8", 1-GANG MUD RING; 1" CONDUIT, (1)RG-6 COAX)
	COMMUNICATIONS OUTLET, 1-PORT DEVICE, COMMUNICATIONS BOX (SEE COMMUNICATIONS RACEWAY SCHEDULE); 1.25" CONDUIT; 4-PORT KEYSTONE FACEPLATE; (1)CAT 6 CABLE/JACK
	COMMUNICATIONS OUTLET, 2-PORT DEVICE, COMMUNICATIONS BOX (SEE COMMUNICATIONS RACEWAY SCHEDULE); 1.25" CONDUIT; 4-PORT KEYSTONE FACEPLATE; (2)CAT 6CABLES/JACKS
	COMMUNICATIONS OUTLET, 3-PORT DEVICE, COMMUNICATIONS BOX (SEE COMMUNICATIONS RACEWAY SCHEDULE); 1.25" CONDUIT; 4-PORT KEYSTONE FACEPLATE; (3)CAT 6CABLES/JACKS
x	COMMUNICATIONS OUTLET, 6-PORT DEVICE, COMMUNICATIONS BOX (SEE COMMUNICATIONS RACEWAY SCHEDULE); 1.25" CONDUIT; 4-PORT KEYSTONE FACEPLATE; (X)CAT 6 CABLES/JACKS

AUDIO/VISUAL

SRCK	EQUIPMENT RACK : RE-INSTALL EXISTING RACK
V	VOLUME CONTROL
S	SPEAKER; CEILING MOUNTED
S	SPEAKER; WALL MOUNTED

SECURITY

SEC	SECURITY SYSTEM HEAD END EQUIPMENT

MISCELLANEOUS

T	THERMOSTAT OUTLET AT +54"
	PUSH BUTTON

SHEET INDEX

Sheet Number	Sheet Title
E001	ABBREVIATIONS G.P.N. LEGEND & SHEET INDEX
E002	SPECIFICATIONS
E003	SPECIFCATIONS
ES101	ELECTRICAL SITE PLAN
ED101	ELECTRICAL DEMOLITION PLANS
E200	LIGHTING PLAN - LOWER LEVEL
E201	LIGHTING PLAN - UPPER LEVEL
E300	POWER PLAN - LOWER LEVEL
E301	POWER PLAN - UPPER LEVEL
E400	ELECTRONIC SYSTEMS PLAN - LOWER LEVEL
E401	ELECTRONIC SYSTEMS PLAN - UPPER LEVEL
E501	ELECTRICAL DETAILS
E601	ELECTRICAL ONE-LINE DIAGRAM

ELECTRICAL ABBREVIATIONS

A	AMPERE	LTG	LIGHTING
AF	AMP FUSE	MAX	MAXIMUM
AFF	ABOVE FINISHED FLOOR	MCB	MAIN CIRCUIT BREAKER
AFG	ABOVE FINISHED GRADE	MECH	MECHANICAL
AFI	ARC-FAULT CIRCUIT-INTERRUPTER	MFR	MANUFACTURER
AIC	AMPERE INTERRUPTING CAPACITY	MIN	MINIMUM
AL	ALUMINUM	MLO	MAIN LUGS ONLY
ARCH	ARCHITECT(URAL)	MTD	MOUNTED
AS	AMP SWITCH	NEC	NATIONAL ELECTRICAL CODE
AWG	AMERICAN WIRE GAUGE	NECA	NATIONAL ELECTRICAL CONTRACTOR'S ASSOCIATION
BLDG	BUILDING	NEMA	NATIONAL ELECTRICAL MANUFACTURERS ASSOCIATION
BKBD	BACKBOARD	NEUT	NEUTRAL
C	CONDUIT	NFC	NATIONAL FIRE CODE
CAB	CABINET	NC	NORMALLY CLOSED
CAT	CATALOG/CATEGORY	NIC	NOT IN CONTRACT
C/B	CIRCUIT BREAKER	NL	NIGHT LITE
CKT	CIRCUIT	NO	NORMALLY OPEN
CLG	CEILING	NTS	NOT TO SCALE
CO	CONDUIT ONLY	OCP	OVERCURRENT PROTECTION
COMM	COMMUNICATION	P	POLE
CONN	CONNECTION	PH	PHASE
CU	COPPER	PNL	PANEL
DEMO	DEMOLITION/DEMOLISH	PWR	POWER
DISC	DISCONNECT	QTY	QUANTITY
DN	DOWN	RECEP	RECEPTACLE
DWG	DRAWING	REQ'D	REQUIRED
EA	EACH	RGSC	RIGID GALVANIZED STEEL CONDUIT
ELEC	ELECTRICAL	RM	ROOM
ELEV	ELEVATOR	SCHED	SCHEDULE
EMER, EM	EMERGENCY	SECT	SECTION
EMT	ELECTRICAL METALLIC TUBING	SP	SINGLE POLE
EOLR	END OF LINE RESISTOR	SN	SOLID NEUTRAL
EQUIP	EQUIPMENT	SPEC	SPECIFICATION
EX, EXIST	EXISTING	SW	SWITCH
FBO	FURNISHED BY OTHERS	SWBD	SWITCHBOARD
FCU	FAN COIL UNIT	SWGR	SWITCH GEAR
FF	FINISHED FLOOR	SYS	SYSTEM
FIXT	FIXTURE	TEMP	TEMPORARY
FLEX	FLEXIBLE METALLIC CONDUIT (STEEL)	TELE	TELEPHONE
FLUOR	FLUORESCENT	XFMR	TRANSFORMER
FT	FEET OR FOOT	T-STAT	THERMOSTAT
GFI	GROUND FAULT INTERRUPTER	TWP	TWISTED PAIR
GND	GROUND	TWSP	TWISTED SHEILDED PAIR
HP	HORSEPOWER	TYP	TYPICAL
HVAC	HEATING, VENTILATING & AIR CONDITIONING	UBC	UNIFORM BUILDING CODE
IG	ISOLATED GROUND	UL	UNDERWRITERS LABORATORY
IMC	INTERMEDIATE METAL CONDUIT	UMC	UNIFORM MECHANICAL CODE
IN	INCH(ES)	UNO	UNLESS NOTED OTHERWISE
ISC	SHORT CIRCUIT AMPERES, KA	V	VOLT OR VOLTAGE
JB, J-BOX	JUNCTION BOX	VA	VOLT AMPERE
KCMIL	THOUSAND CIRCULAR MILS	W	WATT
KVA	KILOVOLT AMPERE	W/	WITH
KW	KILOWATT	WG	WIRE GUARD
		WP	UL LISTED WEATHERPROOF, NEMA 3R or 4

GENERAL WALL-MOUNTED BOX HEIGHT DETAIL

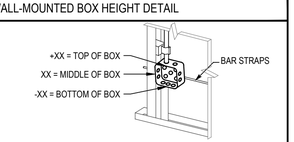

REFER TO POWER, LIGHTING AND COMMUNICATIONS PLANS FOR SPECIFIC DIMENSIONS. SEE GENERAL NOTES AND SPECIFICATIONS WHERE NO HEIGHTS ARE INDICATED.

SINE SOURCE ENGINEERING
95 W Golf Course Road
Suite 102
Logan, Ut 84321
office: (435) 787-1445
fax: 1-877-207-3199
www.sinesource.net

The design represented by these drawings are, and shall remain the property of Sine Source Engineering, LLC and as such Sine Source Engineering, LLC retains total ownership and control. The design represented by these drawings is sold to the client listed in the titleblock for a one time use at the propety indicated.
Any other use or reproduction must be permitted in writing by Sine Source Engineering, LLC.

CONSULTANTS

REGISTERED PROFESSIONAL ENGINEER
No. 6813611
ERIC C. RASMUSSEN
8/17/2022
STATE OF UTAH

CLARKSTON CITY HALL
ADDITION & REMODEL PROJECT
25 SOUTH MAIN STREET
CLARKSTON, UTAH 84305

MARK	DATE	DESCRIPTION

ISSUE:	Construction Documents
PROJECT NUMBER:	2022034
DATE:	AUGUST 17, 2022
DESIGNED BY:	ECR
DRAWN BY:	DDS

ABBREVIATIONS G.P.N. LEGEND & SHEET INDEX

E001

LAST SAVE 8/17/2022 T:\JOBS\2022\2034 CLARKSTON CITY BLDG\01 DRAWINGS\05 ELECTRICAL\SINE SOURCE PROJECT\SHEETS\E001 ABBREVIATIONS G.P.N. LEGEND & SHEET INDEX.DWG
LAST SAVED: 17 Aug 22

SPECIFICATIONS

SECTION 260500 - COMMON WORK RESULTS FOR ELECTRICAL

1.1 PERFORMANCE REQUIREMENTS
A. Seismic Performance: Electrical equipment shall withstand the effects of earthquake motions determined according to SEI/ASCE 7.
1. The term "withstand" means "the unit will remain in place without separation of any parts from the device when subjected to the seismic forces specified."

1.2 QUALITY ASSURANCE
A. Electrical Components, Devices, and Accessories: Listed and labeled as defined in NFPA 70, by a qualified testing agency, and marked for intended location and application.

1.3 SLEEVES FOR RACEWAYS AND CABLES
A. Steel Pipe Sleeves: ASTM A 53/A 53M, Type E, Grade B, Schedule 40, galvanized steel, plain ends.
B. Sleeves for Rectangular Openings: Galvanized sheet steel.

1.4 SLEEVE SEALS
A. Description: Modular sealing device, designed for field assembly, to fill annular space between sleeve and raceway or cable.
1. Sealing Elements: EPDM or NBR interlocking links shaped to fit surface of cable or conduit. Include type and number required for material and size of raceway or cable.
2. Pressure Plates: Stainless steel. Include two for each sealing element.
3. Connecting Bolts and Nuts: Stainless steel of length required to secure pressure plates to sealing elements. Include one for each sealing element.

1.5 ELECTRICAL ENCLOSURES
A. Flush- and surface-mounted cabinets.
1. Rated for environmental conditions at installed location.
a. Indoor Dry and Clean Locations: NEMA 250, Type 1.
b. Outdoor Locations: NEMA 250, Type 3R.
c. Kitchen Areas: NEMA 250, Type 4X, stainless steel.
d. Other Wet or Damp Indoor Locations: NEMA 250, Type 4.

1.6 COMMON REQUIREMENTS FOR ELECTRICAL INSTALLATION
A. Comply with NECA 1.
B. Equipment: Install to facilitate service, maintenance, and repair or replacement of components of both electrical equipment and other nearby installations. Connect in such a way as to facilitate future disconnecting with minimum interference with other items in the vicinity.
C. Right of Way: Give to piping systems installed at a required slope.

1.7 SLEEVE INSTALLATION FOR ELECTRICAL PENETRATIONS
A. Concrete Slabs and Walls: Install sleeves for penetrations unless core-drilled holes or formed openings are used. Install sleeves during erection of slabs and walls.
B. Fire-Rated Assemblies: Install sleeves for penetrations of fire-rated floor and wall assemblies unless openings compatible with firestop system used are fabricated during construction of floor or wall.
C. Seal space outside of sleeves with grout for penetrations of concrete and masonry
D. Fire-Rated-Assembly Penetrations: Maintain indicated fire rating of walls, partitions, ceilings, and floors at raceway and cable penetrations. Install sleeves and seal raceway and cable penetration sleeves with firestop materials.
E. Roof-Penetration Sleeves: Seal penetration of individual raceways and cables with flexible boot-type flashing units applied in coordination with roofing work.

1.8 FIRESTOPPING
A. Apply firestopping to penetrations of fire-rated floor and wall assemblies for electrical installations to restore original fire-resistance rating of assembly.

SECTION 260519 - LOW-VOLTAGE ELECTRICAL POWER CONDUCTORS AND CABLES

1.1 CONDUCTORS AND CABLES
A. Conductor Insulation: Comply with NEMA WC 70/ICEA S-95-658 for Type THHN-2-THWN-2 or Type XHHW-2.
B. Multiconductor Cable: Comply with NEMA WC 70/ICEA S-95-658 for metal-clad cable, Type MC and Type SOW with ground wire.

1.2 CONNECTORS AND SPLICES
A. Description: Factory-fabricated connectors and splices of size, ampacity rating, material, type, and class for application and service indicated.

1.3 CONDUCTOR MATERIAL APPLICATIONS
A. Feeders: Copper for feeders smaller than No. 4 AWG; copper or aluminum for feeders No. 4 AWG and larger.
B. Branch Circuits: Copper.

1.4 CONDUCTOR INSULATION AND MULTICONDUCTOR CABLE APPLICATIONS AND WIRING METHODS
A. Feeders: Type THHN-2-THWN-2 or Type XHHW-2, single conductors in raceway.
B. Exposed Branch Circuits, Including in Crawlspaces: Type THHN-2-THWN-2, single conductors in raceway.
C. Branch Circuits Concealed in Ceilings, Walls, and Partitions: Type THHN-2-THWN-2, single conductors in raceway or Metal-clad cable, Type MC (for connections between devices on the same circuit, but not for home-runs).
D. Cord Drops and Portable Appliance Connections: Type SOW, hard service cord with stainless-steel, wire-mesh, strain relief device at terminations to suit application.

1.5 INSTALLATION OF CONDUCTORS AND CABLES
A. Conceal cables in finished walls, ceilings, and floors unless otherwise indicated.
B. Use manufacturer-approved pulling compound or lubricant where necessary; compound used must not deteriorate conductor or insulation. Do not exceed manufacturer's recommended maximum pulling tensions and sidewall pressure values.
C. Install exposed cables parallel and perpendicular to surfaces of exposed structural members, and follow surface contours where possible.
D. Support cables according to Section 260529 "Hangers and Supports for Electrical Systems."

1.6 CONNECTIONS
A. Make splices, terminations, and taps that are compatible with conductor material.
1. Use oxide inhibitor in each splice, termination, and tap for aluminum conductors.
B. Wiring at Outlets: Install conductor at each outlet, with at least 12 inches of slack.

1.7 IDENTIFICATION
A. Identify and color-code conductors and cables according to Section 260553 "Identification for Electrical Systems."

SECTION 260526 - GROUNDING AND BONDING FOR ELECTRICAL SYSTEMS

1.1 CONDUCTORS
A. Insulated Conductors: Copper wire or cable insulated for 600 V unless otherwise required by applicable Code or authorities having jurisdiction.
B. Bare Copper Conductors:
1. Solid Conductors: ASTM B 3.
2. Stranded Conductors: ASTM B 8.
3. Bonding Conductor: No. 4 or No. 6 AWG, stranded conductor.

1.2 CONNECTORS
A. Listed and labeled by an NRTL acceptable to authorities having jurisdiction for applications in which used and for specific types, sizes, and combinations of conductors and other items connected.
B. Welded Connectors: Exothermic-welding kits of types recommended by kit manufacturer for materials being joined and installation conditions.

1.3 GROUNDING ELECTRODES
A. Ground Rods: Copper-clad Zinc-coated steel; 3/4 inch by 10 feet in diameter.

1.4 APPLICATIONS
A. Isolated Grounding Conductors: Green-colored insulation with continuous yellow stripe. On feeders with isolated ground, identify grounding conductor where visible to normal inspection, with alternating bands of green and yellow tape, with at least three bands of green and two bands of yellow.
B. Conductor Terminations and Connections:
1. Pipe and Equipment Grounding Conductor Terminations: Bolted connectors.
2. Connections to Ground Rods: Bolted connectors.
3. Connections to Structural Steel: Welded connectors.

1.5 EQUIPMENT GROUNDING
A. Install insulated equipment grounding conductors with all service, feeder, and branch circuits, in addition to those required by NFPA 70:

1.6 INSTALLATION
A. Ground Rods: Drive rods until tops are 2 inches below finished floor or final grade unless otherwise indicated.
B. Bonding Straps and Jumpers: Install in locations accessible for inspection and maintenance except where routed through short lengths of conduit.
1. Bonding to Structure: Bond straps directly to basic structure, taking care not to penetrate any adjacent parts.
2. Bonding to Equipment Mounted on Vibration Isolation Hangers and Supports: Install bonding so vibration is not transmitted to rigidly Mounted Equipment

SECTION 260529 - HANGERS AND SUPPORTS FOR ELECTRICAL SYSTEMS

1.1 PERFORMANCE REQUIREMENTS
A. Design equipment supports capable of supporting combined operating weight of supported equipment and connected systems and components.
B. Rated Strength: Adequate in tension, shear, and pullout force to resist maximum loads calculated or imposed for this Project, with a minimum structural safety factor of five times the applied force.

1.2 SUPPORT, ANCHORAGE, AND ATTACHMENT COMPONENTS
A. Steel Slotted Support Systems with galvanized metallic coatings and channel dimensions selected for applicable load criteria.
B. Raceway and Cable Supports: As described in NECA 1 and NECA 101.
C. Conduit and Cable Support Devices: Steel and malleable-iron hangers, clamps, and associated fittings, designed for types and sizes of raceway or cable to be supported.
D. Structural Steel for Fabricated Supports and Restraints: ASTM A 36/A 36M, steel plates, shapes, and bars; black and galvanized.
E. Mounting, Anchoring, and Attachment Components: Items for fastening electrical items or their supports to building surfaces include the following:
1. Powder-Actuated Fasteners: Threaded-steel stud, for use in hardened portland cement concrete, steel, or wood, with tension, shear, and pullout capacities appropriate for supported loads and building materials where used.
2. Mechanical-Expansion Anchors: Insert-wedge-type, stainless steel, for use in hardened portland cement concrete with tension, shear, and pullout capacities appropriate for supported loads and building materials in which used.
3. Concrete Inserts: Steel or malleable-iron, slotted support system units similar to MSS Type 18; complying with MFMA-4 or MSS SP-58.
4. Clamps for Attachment to Steel Structural Elements: MSS SP-58, type suitable for attached structural element.
5. Through Bolts: Structural type, hex head, and high strength. Comply with ASTM A 325.
6. Toggle Bolts: All-steel springhead type.
7. Hanger Rods: Threaded steel.

1.3 FABRICATED METAL EQUIPMENT SUPPORT ASSEMBLIES
A. Description: Welded or bolted, structural-steel shapes, shop or field fabricated to fit dimensions of supported equipment.

1.4 APPLICATION
A. Comply with NECA 1 and NECA 101 for application of hangers and supports for electrical equipment and systems except if requirements in this Section are stricter.

1.5 SUPPORT INSTALLATION
A. Comply with NECA 1 and NECA 101 for installation requirements except as specified in this Article.
B. Mounting and Anchorage of Surface-Mounted Equipment and Components: Anchor and fasten electrical items and their supports to building structural elements by the following methods unless otherwise indicated by code:
1. To Wood: Fasten with lag screws or through bolts.
2. To New Concrete: Bolt to concrete inserts.
3. To Masonry: Approved toggle-type bolts on hollow masonry units and expansion anchor fasteners on solid masonry units.
4. To Existing Concrete: Expansion anchor fasteners.
5. Instead of expansion anchors, powder-actuated driven threaded studs provided with lock washers and nuts may be used in existing standard-weight concrete 4 inches thick or greater. Do not use for anchorage to lightweight-aggregate concrete or for slabs less than 4 inches thick.
6. To Steel: Welded threaded studs complying with AWS D1.1/D1.1M, with lock washers and nuts or Beam clamps (MSS Type 19, 21, 23, 25, or 27) complying with MSS SP-69.
7. To Light Steel: Sheet metal screws.
8. Items Mounted on Hollow Walls and Nonstructural Building Surfaces: Mount cabinets, panelboards, disconnect switches, control enclosures, pull and junction boxes, transformers, and other devices on slotted-channel racks attached to substrate by means that meet seismic-restraint strength and anchorage requirements

SECTION 260533 - RACEWAYS AND BOXES FOR ELECTRICAL SYSTEMS

1.1 METAL CONDUITS, TUBING, AND FITTINGS
A. Listing and Labeling: Metal conduits, tubing, and fittings shall be listed and labeled as defined in NFPA 70, by a qualified testing agency, and marked for intended location and application.
B. Fittings for Metal Conduit: Comply with NEMA FB 1 and UL 514B.
1. Conduit Fittings for Hazardous (Classified) Locations: Comply with UL 886 and NFPA 70.
2. Fittings for EMT:
a. Material: Steel or die cast.
b. Type: Setscrew or compression.

1.2 NONMETALLIC CONDUITS, TUBING, AND FITTINGS
A. Listing and Labeling: Nonmetallic conduits, tubing, and fittings shall be listed and labeled as defined in NFPA 70, by a qualified testing agency, and marked for intended location and application.

1.3 METAL WIREWAYS AND AUXILIARY GUTTERS
A. Description: Sheet metal, complying with UL 870 and NEMA 250, unless otherwise indicated, and sized according to NFPA 70.
B. Fittings and Accessories: Include covers, couplings, offsets, elbows, expansion joints, adapters, hold-down straps, end caps, and other fittings to match and mate with wireways as required for complete system.

1.4 BOXES, ENCLOSURES, AND CABINETS
A. General Requirements for Boxes, Enclosures, and Cabinets: Boxes, enclosures, and cabinets installed in wet locations shall be listed for use in wet locations.
B. Sheet Metal Outlet, Device, Pull, and Junction Boxes: Comply with NEMA OS 1 and UL 514A.
C. Cast-Metal Outlet, Device, Pull, and Junction Boxes: Comply with NEMA FB 1, ferrous alloy or aluminum, Type FD, with gasketed cover.
D. Metal Floor Boxes:
1. Material: sheet metal.
2. Type: Fully adjustable.
3. Shape: Rectangular.
4. Listing and Labeling: Metal floor boxes shall be listed and labeled as defined in NFPA 70, by a qualified testing agency, and marked for intended location and application.
E. Hinged-Cover Enclosures: Comply with UL 50 and NEMA 250, with continuous-hinge cover with flush latch unless otherwise indicated.

1.5 HANDHOLES AND BOXES FOR EXTERIOR UNDERGROUND WIRING
A. General Requirements for Handholes and Boxes:
1. Boxes and handholes for use in underground systems shall be designed and identified as defined in NFPA 70, for intended location and application.
2. Boxes installed in wet areas shall be listed and labeled as defined in NFPA 70, by a qualified testing agency, and marked for intended location and application.
B. Polymer-Concrete Handholes and Boxes with Polymer-Concrete Cover: Molded of sand and aggregate, bound together with polymer resin, and reinforced with steel, fiberglass, or a combination of the two.
1. Cover Legend: Molded lettering, "ELECTRIC.".

1.6 RACEWAY APPLICATION
A. Outdoors: Apply raceway products as specified below unless otherwise indicated:
1. Above-grade: GRC.
2. Underground Conduit: RNC, Type EPC-40-PVC or Type EPC-80-PVC where required by utility.
3. Connection to Vibrating Equipment (Including Transformers and Hydraulic, Pneumatic, Electric Solenoid, or Motor-Driven Equipment): LFMC.
4. Boxes and Enclosures, Aboveground: NEMA 250, Type 3R.
B. Indoors: Apply raceway products as specified below unless otherwise indicated.
1. Exposed, Not Subject to Physical Damage: EMT.
2. Exposed and Subject to Physical Damage: GRC.
3. Concealed in Ceilings and Interior Walls and Partitions: EMT.
4. Connection to Vibrating Equipment (Including Transformers and Hydraulic, Pneumatic, Electric Solenoid, or Motor-Driven Equipment): FMC, except use LFMC in damp or wet locations.
5. Damp or Wet Locations: GRC.
6. Boxes and Enclosures: NEMA 250, Type 1, except use NEMA 250, Type 4 stainless steel in institutional and commercial kitchens and damp or wet locations.
C. Minimum Raceway Size: 3/4-inch trade size.
D. Do not install aluminum conduits, boxes, or fittings in contact with concrete or earth.

1.7 INSTALLATION
A. Comply with NECA 1 and NECA 101 for installation requirements except where requirements on Drawings or in this article are stricter. Comply with NECA 102 for aluminum conduits. Comply with NFPA 70 limitations for types of raceways allowed in specific occupancies and number of floors.
B. Raceways Embedded in Slabs: Change from RNC to wrapped, GRC before rising above floor.
C. Install devices to seal raceway interiors at accessible locations. Locate seals so no fittings or boxes are between the seal and the following changes of environments. Seal the interior of all raceways where required by NFPA 70:
D. Mount boxes at heights indicated on Drawings. If mounting heights of boxes are not individually indicated, give priority to ADA requirements. Install boxes with height measured to top of box unless otherwise indicated.
E. Horizontally separate boxes mounted on opposite sides of walls so they are not in the same vertical channel.
F. Locate boxes so that cover or plate will not span different building finishes.
G. Support boxes of three gangs or more from more than one side by spanning two framing members or mounting on brackets specifically designed for the purpose.
H. Fasten junction and pull boxes to or support from building structure. Do not support boxes by conduits.
I. Set metal floor boxes level and flush with finished floor surface.

1.8 INSTALLATION OF UNDERGROUND CONDUIT
A. Direct-Buried Conduit:
1. Excavate trench bottom to provide firm and uniform support for conduit.
2. Install backfill
3. Install manufactured rigid steel conduit elbows for stub-ups at poles and equipment and at building entrances through floor.
a. Couple steel conduits to ducts with adapters designed for this purpose, and encase coupling with 3 inches of concrete for a minimum of 12 inches on each side of the coupling.
b. For stub-ups at equipment mounted on outdoor concrete bases and where conduits penetrate building foundations, extend steel conduit horizontally a minimum of 60 inches from edge of foundation or equipment base. Install insulated grounding bushings on terminations at equipment.
4. Underground Warning Tape: Comply with requirements in Section 260553 "Identification for Electrical Systems."

1.9 INSTALLATION OF UNDERGROUND HANDHOLES AND BOXES
A. Install handholes and boxes level and plumb and with orientation and depth coordinated with connecting conduits to minimize bends and deflections required for proper entrances.
B. Unless otherwise indicated, support units on a level bed of crushed stone or gravel, graded from 1/2-inch sieve to No. 4 sieve and compacted to same density as adjacent undisturbed earth.
C. Elevation: In paved areas, set so cover surface will be flush with finished grade. Set covers of other enclosures 1 inch above finished grade.

SECTION 260548 - VIBRATION AND SEISMIC CONTROLS FOR ELECTRICAL SYSTEMS

1.1 PERFORMANCE REQUIREMENTS
A. Seismic-Restraint Loading:
1. Site Class as Defined in the IBC: D.
2. Assigned Seismic Use Group or Building Category as Defined in the IBC: III.
a. Component Importance Factor:
1) General: 1.0.
2) Life Safety (EM): 1.5
b. Component Response Modification Factor:
1) Fixtures: 1.0
2) Equipment: 2.5
3) Conduit and Cables: 5.0.
c. Component Amplification Factor: 2.5.
3. Design Spectral Response Acceleration at Short Periods (0.2 Second): 173%.
4. Design Spectral Response Acceleration at 1.0-Second Period: 76%.

1.2 SEISMIC-RESTRAINT DEVICES
A. General Requirements for Restraint Components: Rated strengths, features, and application requirements shall be as defined in reports by an agency acceptable to authorities having jurisdiction.
1. Structural Safety Factor: Allowable strength in tension, shear, and pullout force of components shall be at least four times the maximum seismic forces to which they will be subjected.
B. Restraint Cables: ASTM A 603 galvanized-steel cables with end connections made of steel assemblies with thimbles, brackets, swivels, and bolts designed for restraining cable service; and with a minimum of two clamping bolts for cable engagement.
C. Mechanical Anchor: Drilled-in and stud-wedge or female-wedge type in zinc-coated steel for interior applications and stainless steel for exterior applications. Select anchors with strength required for anchor and as tested according to ASTM E 488. Minimum length of eight times diameter.
D. Adhesive Anchor: Drilled-in and capsule anchor system containing polyvinyl or urethane methacrylate-based resin and accelerator, or injected polymer or hybrid mortar adhesive. Provide anchor bolts and hardware with zinc-coated steel for interior applications and stainless steel for exterior applications. Select anchor bolts with strength required for anchor and as tested according to ASTM E 488.

1.3 APPLICATIONS
A. Strength of Support and Seismic-Restraint Assemblies: Where not indicated, select sizes of components so strength will be adequate to carry present and future static and seismic loads within specified loading limits.

1.4 SEISMIC-RESTRAINT DEVICE INSTALLATION
A. Install bushing assemblies for mounting bolts for wall-mounted equipment, arranged to provide resilient media where equipment or equipment-mounting channels are attached to wall.
B. Attachment to Structure: If specific attachment is not indicated, anchor bracing to structure at flanges of beams, at upper truss chords of bar joists, or at concrete members.
C. Drilled-in Anchors:
1. Identify position of reinforcing steel and other embedded items prior to drilling holes for anchors. Do not damage existing reinforcing or embedded items during coring or drilling. Notify the structural engineer if reinforcing steel or other embedded items are encountered during drilling. Locate and avoid prestressed tendons, electrical and telecommunications conduit, and gas lines.
2. Do not drill holes in concrete or masonry until concrete, mortar, or grout has achieved full design strength.
3. Wedge Anchors: Protect threads from damage during anchor installation. Heavy-duty sleeve anchors shall be installed with sleeve fully engaged in the structural element to which anchor is to be fastened.
4. Adhesive Anchors: Clean holes to remove loose material and drilling dust prior to installation of adhesive. Place adhesive in holes proceeding from the bottom of the hole and progressing toward the surface in such a manner as to avoid introduction of air pockets in the adhesive.
5. Set anchors to manufacturer's recommended torque, using a torque wrench.
6. Install zinc-coated steel anchors for interior and stainless-steel anchors for exterior applications.

1.5 ADJUSTING
A. Adjust isolators after isolated equipment is at operating weight.
B. Adjust limit stops on restrained spring isolators to mount equipment at normal operating height. After equipment installation is complete, adjust limit stops so they are out of contact during normal operation.
C. Adjust active height of spring isolators.
D. Adjust restraints to permit free movement of equipment within normal mode of operation.

SECTION 260553 IDENTIFICATION FOR ELECTRICAL SYSTEMS

1.1 INSTALLATION
A. Location: Install identification materials and devices at locations for most convenient viewing without interference with operation and maintenance of equipment.
B. Attach signs and plastic labels that are not self-adhesive type with mechanical fasteners appropriate to the location and substrate.
C. System Identification Color-Coding Bands for Raceways and Cables: Each color-coding band shall completely encircle cable or conduit. Place adjacent bands of two-color markings in contact, side by side. Locate bands at changes in direction, at penetrations of walls and floors, at 50-foot maximum intervals in straight runs, and at 25-foot maximum intervals in congested areas.
D. Underground-Line Warning Tape: During backfilling of trenches install continuous underground-line warning tape directly above line at 6 to 8 inches below finished grade. Use multiple tapes where width of multiple lines installed in a common trenchexceeds 16 inches overall.

1.2 IDENTIFICATION SCHEDULE
A. Power-Circuit Conductor Identification, 600 V or Less: For conductors in vaults, pull and junction boxes, manholes, and handholes, use color-coding conductor tape to identify the phase.
1. Color-Coding for Phase Identification, 600 V or Less: Use colors listed below for ungrounded service feeder and branch-circuit conductors.
a. Color shall be factory applied or field applied for sizes larger than No. 8 AWG, if authorities having jurisdiction permit.
b. Colors for 120/208-V Circuits:
1) Phase A: Black.
2) Phase B: Red
3) Phase C: Blue
4) Neutral: White with colored stripe to match associated phase
5) Ground: Green
6) Isolated Ground: Green with continuous yellow stripe
B. Auxiliary Electrical Systems Conductor Identification: Identify field-installed alarm, control, and signal connections.
C. Locations of Underground Lines: Identify with underground-line warning tape for power, lighting, communication, and control wiring and optical fiber cable.
D. Workspace Indication: Install floor marking tape to show working clearances in the direction of access to live parts. Workspace shall be as required by NFPA 70 and 29 CFR 1926.403 unless otherwise indicated. Do not install at flush-mounted panelboards and similar equipment in finished spaces.
E. Warning Labels for Indoor Cabinets, Boxes, and Enclosures for Power and Lighting: Self-adhesive warning labels.
1. Identify system voltage with black letters on an orange background.
2. Apply to exterior of door, cover, or other access.
3. Install arc-flash hazard warning for equipment likely to be examined while energized.
F. Equipment Identification Labels: On each unit of equipment, install unique designation label that is consistent with wiring diagrams, schedules, and the Operation and Maintenance Manual. Apply labels to disconnect switches and protection equipment, central or master units, control panels, control stations, terminal cabinets, and racks of each system. Systems include power, lighting, control, communication, signal, monitoring, and alarm systems unless equipment is provided with its own identification.
1. Labeling Instructions:
a. Indoor Equipment: Self-adhesive, engraved, laminated acrylic or melamine label.
b. Outdoor Equipment: Engraved, laminated acrylic or melamine label.
c. Elevated Components: Increase sizes of labels and letters to those appropriate for viewing from the floor.
d. Unless provided with self-adhesive means of attachment, fasten labels with appropriate mechanical fasteners that do not change the NEMA or NRTL rating of the enclosure.

SECTION 260923 - LIGHTING CONTROL DEVICES

1.1 SUBMITTALS
A. Product Data: For each type of product.
B. Operation and maintenance data

1.2 OUTDOOR PHOTOELECTRIC SWITCHES
A. Description: Solid state, with SPST dry contacts rated for 1800 VA, to operate connected load, complying with UL 773.
1. Light-Level Monitoring Range: 1.5 to 10 fc, with an adjustment for turn-on and turn-off levels within that range.
2. Time Delay: Thirty-second minimum, to prevent false operation.
3. Lightning Arrester: Air-gap type.
4. Mounting: Twist lock complying with NEMA C136.10, with base.

1.3 INDOOR OCCUPANCY SENSORS
A. General Requirements for Sensors: Wall- or ceiling-mounted, solid-state indoor occupancy sensors with a separate power pack.
1. Operation: Unless otherwise indicated, turn lights on when coverage area is occupied, and turn them off when unoccupied; with a time delay for turning lights off, adjustable over a minimum range of 1 to 15 minutes.
2. Sensor Output: Contacts rated to operate the connected relay, complying with UL 773A. Sensor is powered from the power pack.
3. Power Pack: Dry contacts rated for 20-A ballast load at 120- and 277-V ac, for 13-A tungsten at 120-V ac, and for 1 hp at 120-V ac. Sensor has 24-V dc, 150-mA, Class 2 power source, as defined by NFPA 70.
4. Indicator: Digital display, to show when motion is detected during testing and normal operation of sensor.
5. Bypass Switch: Override the "on" function in case of sensor failure.
6. Automatic Light-Level Sensor: Adjustable from 2 to 200 fc; turn lights off when selected lighting level is present.
B. PIR Type: Ceiling mounted; detect occupants in coverage area by their heat and movement.
1. Detector Sensitivity: Detect occurrences of 6-inch- minimum movement of any portion of a human body that presents a target of not less than 36 sq. in..
2. Detection Coverage (Room): Detect occupancy anywhere in a circular area of 1000 sq. ft. when mounted on a 96-inch- high ceiling.
3. Detection Coverage (Corridor): Detect occupancy within 90 feet when mounted on a 10-foot- high ceiling.
C. Dual-Technology Type: Ceiling mounted; detect occupants in coverage area using PIR and ultrasonic detection methods. The particular technology or combination of technologies that control on-off functions is selectable in the field by operating controls on unit.
1. Sensitivity Adjustment: Separate for each sensing technology.
2. Detector Sensitivity: Detect occurrences of 6-inch- minimum movement of any portion of a human body that presents a target of not less than 36 sq. in., and detect a person of average size and weight moving not less than 12 inches in either a horizontal or a vertical manner at an approximate speed of 12 inches/s.
3. Detection Coverage (Standard Room): Detect occupancy anywhere within a circular area of 1000 sq. ft. when mounted on a 96-inch- high ceiling.

1.4 SWITCHBOX-MOUNTED OCCUPANCY SENSORS
A. General Requirements for Sensors: Automatic-wall-switch occupancy sensor, suitable for mounting in a single gang switchbox.
1. Operating Ambient Conditions: Dry interior conditions, 32 to 120 deg F.
2. Switch Rating: Not less than 800-VA fluorescent at 120 V, 1200-VA fluorescent at 277 V, and 800-W incandescent.

1.5 INSTALLATION
A. Install and aim sensors in locations to achieve not less than 90 percent coverage of areas indicated. Do not exceed coverage limits specified in manufacturer's written instructions.
B. Occupancy Adjustments: When requested within 12 months from date of Substantial Completion, provide on-site assistance in adjusting sensors to suit actual occupied conditions. Provide up to two visits to Project during other-than-normal occupancy hours for this purpose.
1. For occupancy and motion sensors, verify operation at outer limits of detector range. Set time delay to suit Owner's operations.
C. Identify components and power and control wiring according to Section 260553 "Identification for Electrical Systems."

1.6 FIELD QUALITY CONTROL
A. Perform the following tests and inspections:
1. Operational Test: After installing time switches and sensors, and after electrical circuitry has been energized, start units to confirm proper unit operation.
2. Test and adjust controls and safeties. Replace damaged and malfunctioning controls and equipment.

SECTION 260943 - RELAY-BASED LIGHTING CONTROLS

1.1 ACTION SUBMITTALS
A. Product Data: For each type of product.
B. Shop Drawings: For each relay panel and related equipment.

1.2 SYSTEM DESCRIPTION
A. Input signal from field-mounted manual switches, or digital signal sources, shall open or close one or more lighting control relays in the lighting control panels. Any combination of inputs shall be programmable to any number of control relays.
B. Electrical Components, Devices, and Accessories: Listed and labeled as defined in NFPA 70, by a qualified testing agency, and marked for intended location and application.
C. Comply with UL 916.

1.3 LIGHTING CONTROL RELAY PANELS
A. Description: Standalone lighting control panel using mechanically latched relays to control lighting and appliances.
B. Lighting Control Panel:
1. Leviton EZ-Max or equivalent
2. A single enclosure with incoming lighting branch circuits, control circuits, switching relays, and on-board timing and control unit.
3. A vertical barrier separating branch circuits from control wiring.
C. Control Unit: Contain the power supply and electronic control for operating and monitoring individual relays.
1. Timing Unit:
a. 365-day calendar, astronomical clock, and automatic adjustments for daylight savings and leap year.
2. Sequencing Control with Override:
3. Nonvolatile memory shall retain all setup configurations. After a power failure, the controller shall automatically reboot and return to normal system operation, including accurate time of day and date.
D. Relays: Electrically operated, mechanically held single-pole and double-pole switch, rated at 20 A at 277 V. Short-circuit current rating shall be not less than 5 kA. Control shall be three-wire, 24-V ac.
E. Operator Interface:
1. Integral alphanumeric touchscreen with intuitive drop-down menus to assist in programming.

1.4 MANUAL SWITCHES AND PLATES
A. Push-Button Switches: Modular, digitally addressible, for operating one or more relays and to override automatic controls.
1. Match color and style specified in Section 262726 "Wiring Devices."
2. Integral green LED pilot light to indicate when circuit is on.
3. Internal white LED locator light to illuminate when circuit is off.
B. Wall Plates: Single and multigang plates as specified in Section 262726 "Wiring Devices."
C. Legend: Engraved or permanently silk-screened on wall plate where indicated. Use designations indicated on Drawings.

1.5 EXAMINATION
A. Examine panels before installation. Reject panels that are damaged or rusted or have been subjected to water saturation.

1.6 PANEL INSTALLATION
A. Mount panel cabinet plumb and rigid without distortion of box.
B. Install filler plates in unused spaces.

1.7 IDENTIFICATION
A. Identify system components, wiring, cabling, and terminals. Comply with requirements for identification specified in Section 260553 "Identification for Electrical Systems."

1.8 DEMONSTRATION
A. Train Owner's maintenance personnel to adjust, operate, and maintain the control unit and operator interface.

SECTION 262416 - PANELBOARDS

1.1 ACTION SUBMITTALS
A. Product Data: For each type of product indicated.
B. Shop Drawings: For each panelboard and related equipment.

1.2 QUALITY ASSURANCE
A. Electrical Components, Devices, and Accessories: Listed and labeled as defined in NFPA 70, by a qualified testing agency, and marked for intended location and application.

1.3 GENERAL REQUIREMENTS FOR PANELBOARDS
A. Fabricate and test panelboards according to IEEE 344 to withstand seismic forces defined in Section 260548 "Vibration and Seismic Controls for Electrical Systems."
B. Enclosures: Flush- and surface-mounted cabinets.
1. Rated for environmental conditions at installed location.
2. Front: Secured to box with concealed trim clamps. For surface-mounted fronts, match box dimensions; for flush-mounted fronts, overlap box.
3. Directory Card: Inside panelboard door, mounted in transparent card holder.
C. Phase, Neutral, and Ground Buses: Tin-plated aluminum or Hard-drawn copper, 98 percent conductivity.
D. Conductor Connectors: Suitable for use with conductor material and sizes.
1. Material: Tin-plated aluminum or Hard-drawn copper, 98 percent conductivity.
2. Mechanical type.
3. Subfeed (Double) Lugs: Mechanical type suitable for use with conductor material. Locate at same end of bus as incoming lugs or main device.
E. Service Equipment Label: NRTL labeled for use as service equipment for panelboards with one or more main service disconnecting and overcurrent protective devices.
F. Future Devices: Mounting brackets, bus connections, filler plates, and necessary appurtenances required for future installation of devices.
G. Panelboard Short-Circuit Current Rating: Fully rated to interrupt symmetrical short-circuit current available at terminals.

1.4 DISTRIBUTION PANELBOARDS
A. Panelboards: NEMA PB 1, power and feeder distribution type.
B. Doors: Secured with vault-type latch with tumbler lock; keyed alike.
C. Branch Overcurrent Protective Devices: For Circuit-Breaker Frame Sizes 125 A and Smaller: Plug-in or Bolt-on circuit breakers.
D. Branch Overcurrent Protective Devices: For Circuit-Breaker Frame Sizes Larger Than 125 A: Bolt-on circuit breakers; plug-in circuit breakers where individual positive-locking device requires mechanical release for removal.

1.5 LIGHTING AND APPLIANCE BRANCH-CIRCUIT PANELBOARDS
A. Panelboards: NEMA PB 1, lighting and appliance branch-circuit type.
B. Branch Overcurrent Protective Devices: Plug-in or Bolt-on circuit breakers, replaceable without disturbing adjacent units.
C. Contactors in Main Bus: NEMA ICS 2, Class A, electrically or mechanically held as coordinated with fuel dispenser supplierd, general-purpose controller, with same short-circuit interrupting rating as panelboard.
1. External Control-Power Source: As required by fuel dispenser vendor .
D. Doors: Concealed hinges; secured with flush latch with tumbler lock; keyed alike.

1.6 DISCONNECTING AND OVERCURRENT PROTECTIVE DEVICES
A. Molded-Case Circuit Breaker (MCCB): Comply with UL 489, with interrupting capacity to meet available fault currents.
1. Thermal-Magnetic Circuit Breakers: Inverse time-current element for low-level overloads, and instantaneous magnetic trip element for short circuits. Adjustable magnetic trip setting for circuit-breaker frame sizes 250 A and larger.
2. GFCI Circuit Breakers: Single- and two-pole configurations with Class A ground-fault protection (6-mA trip).
3. Ground-Fault Equipment Protection (GFEP) Circuit Breakers: Class B ground-fault protection (30-mA trip).
4. Molded-Case Circuit-Breaker (MCCB) Features and Accessories:
a. Standard frame sizes, trip ratings, and number of poles.
b. Lugs: Mechanical style, suitable for number, size, trip ratings, and conductor materials.
c. Application Listing: Appropriate for application; Type SWD for switching fluorescent lighting loads; Type HID for feeding fluorescent and high-intensity discharge (HID) lighting circuits.
d. Shunt Trip: 120 or 24-V (per system requirements) trip coil energized from separate circuit, set to trip at 75 percent of rated voltage.
e. Handle Padlocking Device: Fixed attachment, for locking circuit-breaker handle in on or off position.

1.7 INSTALLATION
A. Comply with mounting and anchoring requirements specified in Section 260548 "Vibration and Seismic Controls for Electrical Systems."
B. Mount panelboard cabinet plumb and rigid without distortion of box. Mount recessed panelboards with fronts uniformly flush with wall finish and mating with back box.
C. Install overcurrent protective devices and controllers not already factory installed.
1. Set field-adjustable, circuit-breaker trip ranges.
D. Install filler plates in unused spaces.
E. Arrange conductors in gutters into groups and bundle and wrap with wire ties.
F. Comply with NECA 1.

1.8 IDENTIFICATION
A. Identify field-installed conductors, interconnecting wiring, and components; provide warning signs complying with Section 260553 "Identification for Electrical Systems."
B. Create a directory to indicate installed circuit loads and incorporating Owner's final room designations. Obtain approval before installing. Use a computer or typewriter to create directory; handwritten directories are not acceptable.
C. Panelboard Nameplates: Label each panelboard with a nameplate complying with requirements for identification specified in Section 260553 "Identification for Electrical Systems."
D. Device Nameplates: Label each branch circuit device in distribution panelboards with a nameplate complying with requirements for identification specified in Section 260553 "Identification for Electrical Systems."

SECTION 262713 - ELECTRICITY METERING

1.1 SUMMARY
A. Section includes equipment for electricity metering by utility company.

1.2 SUBMITTALS
A. Product Data: For each type of product indicated.
B. Shop Drawings: Dimensioned plans and sections or elevation layouts and wiring diagrams.
C. Field quality-control reports.
D. Operation and Maintenance Data.

1.3 QUALITY ASSURANCE
A. Electrical Components, Devices, and Accessories: Listed and labeled as defined in NFPA 70, by a qualified testing agency, and marked for intended location and application.

1.4 EQUIPMENT FOR ELECTRICITY METERING BY UTILITY COMPANY
A. Meters will be furnished by utility company.
B. Current-Transformer Cabinets: Comply with requirements of electrical-power utility company.
C. Meter Sockets: Comply with requirements of electrical-power utility company.

1.5 INSTALLATION
A. Comply with equipment installation requirements in NECA 1.
B. Install meters furnished by utility company. Install raceways and equipment according to utility company's written requirements. Provide empty conduits for metering leads and extend grounding connections as required by utility company.
C. Comply with requirements for identification specified in Division 26 Section "Identification for Electrical Systems."
1. Series Combination Warning Label: Self-adhesive type, with text as required by NFPA 70.

SINE SOURCE ENGINEERING
95 W Golf Course Road
Suite 102
Logan, Ut 84321
office: (435) 787-1445
fax: 1-877-207-3199
www.sinesource.net

The design represented by these drawings are, and shall remain the property of Sine Source Engineering, LLC and as such Sine Source Engineering, LLC retains total ownership and control. The design represented by these drawings is sold to the client listed in the titleblock for a one time use at the propety indicated.
Any other use or reproduction must be permitted in writing by Sine Source Engineering, LLC.

CONSULTANTS

REGISTERED PROFESSIONAL ENGINEER
No. 6813611
ERIC C. RASMUSSEN
8/11/2022
STATE OF UTAH

CLARKSTON CITY HALL
ADDITION & REMODEL PROJECT
25 SOUTH MAIN STREET
CLARKSTON, UTAH 84305

MARK	DATE	DESCRIPTION

ISSUE:	Construction Documents
PROJECT NUMBER:	2022034
DATE:	AUGUST 17, 2022
DESIGNED BY:	ECR
DRAWN BY:	DDS

SPECIFICATIONS

E002

LAST SAVE 6/25/2022 T:\JOBS\2022034 CLARKSTON CITY BLDG\01 DRAWINGS\05 ELECTRICAL\SINE SOURCE PROJECT\SHEETS\E002 SPECIFICATIONS.DWG
LAST SAVED: 25 Jun 22

SPECIFICATIONS

SECTION 262726 - WIRING DEVICES

1.1 ADMINISTRATIVE REQUIREMENTS
A. Coordination:
1. Receptacles for Owner-Furnished Equipment: Match plug configurations.

1.2 GENERAL WIRING-DEVICE REQUIREMENTS
A. Wiring Devices, Components, and Accessories: Listed and labeled as defined in NFPA 70, by a qualified testing agency, and marked for intended location and application.

1.3 STRAIGHT-BLADE RECEPTACLES
A. Convenience Receptacles, 125 V, 20 A: Comply with NEMA WD 1, NEMA WD 6 Configuration 5-20R, UL 498, and FS W-C-596.
B. Isolated-Ground, Duplex Convenience Receptacles, 125 V, 20 A: Comply with NEMA WD 1, NEMA WD 6 Configuration 5-20R, UL 498, and FS W-C-596.
1. Description: Straight blade; equipment grounding contacts shall be connected only to the green grounding screw terminal of the device and with inherent electrical isolation from mounting strap. Isolation shall be integral to receptacle construction and not dependent on removable parts.

1.4 GFCI RECEPTACLES
A. General Description:
1. Straight blade, feed-through type.
2. Comply with NEMA WD 1, NEMA WD 6, UL 498, UL 943 Class A, and FS W-C-596.
3. Include indicator light that shows when the GFCI has malfunctioned and no longer provides proper GFCI protection.
B. Duplex GFCI Convenience Receptacles, 125 V, 20 A:

1.5 TOGGLE SWITCHES
A. Comply with NEMA WD 1, UL 20, and FS W-S-896.
B. Switches, 120/277 V, 20 A:
C. Pilot-Light Switches, 20 A:
1. Description: Single pole, with neon-lighted handle, illuminated when switch is "off."

1.6 WALL-BOX DIMMERS
A. Dimmer Switches: Modular, full-wave, solid-state units with integral, quiet on-off switches, with audible frequency and EMI/RFI suppression filters.
B. Control: Continuously adjustable toggle switch; with single-pole or three-way switching. Comply with UL 1472.
C. LED Lamp Dimmer Switches: Modular, compatible with dimmer drivers; trim potentiometer to adjust low-end dimming; dimmer-driver combination capable of consistent dimming with low end not greater than 1 percent of full brightness.

1.7 WALL PLATES
A. Single and combination types shall match corresponding wiring devices.
1. Plate-Securing Screws: Metal with head color to match plate finish.
2. Material for Finished Spaces: 0.035-inch- thick, satin-finished, Type 302 stainless steel.
3. Material for Unfinished Spaces: Galvanized steel.
4. Material for Damp Locations: Thermoplastic or Cast aluminum with spring-loaded lift cover, and listed and labeled for use in wet and damp locations.
B. Wet-Location, Weatherproof Cover Plates: NEMA 250, complying with Type 3R, weather-resistant, die-cast aluminum or thermoplastic with lockable cover.

1.8 FINISHES
A. Device Color:
1. Wiring Devices Connected to Normal Power System: As selected by owner unless otherwise indicated or required by NFPA 70 or device listing.
2. Isolated Ground Devices: Orange.
B. Wall Plate Color: For plastic covers, match device color.

1.9 INSTALLATION
A. Comply with NECA 1, including mounting heights listed in that standard, unless otherwise indicated.
B. Conductors:
1. Do not strip insulation from conductors until right before they are spliced or terminated on devices.
2. Strip insulation evenly around the conductor using tools designed for the purpose. Avoid scoring or nicking of solid wire or cutting strands from stranded wire.
3. The length of free conductors at outlets for devices shall meet provisions of NFPA 70, Article 300, without pigtails.
4. Existing Conductors:
a. Cut back and pigtail, or replace all damaged conductors.
b. Straighten conductors that remain and remove corrosion and foreign matter.
c. Pigtailing existing conductors is permitted, provided the outlet box is large enough.
C. Device Installation:
1. Replace devices that have been in temporary use during construction and that were installed before building finishing operations were complete.
2. Connect devices to branch circuits using pigtails that are not less than 12 inches in length.
3. When conductors larger than No. 12 AWG are installed on 15- or 20-A circuits, splice No. 12 AWG pigtails for device connections.
D. Dimmers:
1. Install unshared neutral conductors on line and load side of dimmers according to manufacturers' device listing conditions in the written instructions.

SECTION 262816 - ENCLOSED SWITCHES AND CIRCUIT BREAKERS

1.1 QUALITY ASSURANCE
A. Electrical Components, Devices, and Accessories: Listed and labeled as defined in NFPA 70, by a qualified testing agency, and marked for intended location and application.
B. Comply with NFPA 70.

1.2 NONFUSIBLE SWITCHES
A. Type GD, General Duty, Single Throw, 600 A and Smaller: UL 98 and NEMA KS 1, horsepower rated, lockable handle with capability to accept two padlocks, and interlocked with cover in closed position.
B. Accessories:
1. Equipment Ground Kit: Internally mounted and labeled for copper and aluminum ground conductors.
2. Neutral Kit: Internally mounted; insulated, capable of being grounded and bonded; labeled for copper and aluminum neutral conductors.
3. Lugs: Suitable for number, size, and conductor material.

1.3 MOLDED-CASE CIRCUIT BREAKERS
A. General Requirements: Comply with UL 489, NEMA AB 1, and NEMA AB 3, with interrupting capacity to comply with available fault currents.
B. Thermal-Magnetic Circuit Breakers: Inverse time-current element for low-level overloads and instantaneous magnetic trip element for short circuits. Adjustable magnetic trip setting for circuit-breaker frame sizes 250 A and larger.
C. Features and Accessories:
1. Standard frame sizes, trip ratings, and number of poles.
2. Lugs: Suitable for number, size, trip ratings, and conductor material.
3. Application Listing: Appropriate for application; Type SWD for switching fluorescent lighting loads; Type HID for feeding fluorescent and high-intensity discharge lighting circuits.

1.4 INSTALLATION
A. Install individual wall-mounted switches and circuit breakers with tops at uniform height unless otherwise indicated.
B. Comply with NECA 1.

1.5 IDENTIFICATION
A. Comply with requirements in Section 260553 "Identification for Electrical Systems."

SECTION 262913 - ENCLOSED CONTROLLERS

1.1 SUBMITTALS
A. Operation and maintenance data.

1.2 FULL-VOLTAGE CONTROLLERS
A. General Requirements for Full-Voltage Controllers: Comply with NEMA ICS 2, general purpose, Class A.
B. Motor-Starting Switches: "Quick-make, quick-break" toggle or push-button action; marked to show whether unit is off or on.
1. Configuration: Nonreversing.
2. Surface mounting.
3. Pilot light.
C. Fractional Horsepower Manual Controllers: "Quick-make, quick-break" toggle or push-button action; marked to show whether unit is off, on, or tripped.
1. Configuration: Nonreversing.
2. Overload Relays: Inverse-time-current characteristics; NEMA ICS 2, Class 10 tripping characteristics; heaters matched to nameplate full-load current of actual protected motor; external reset push button; bimetallic type or melting alloy type.
3. Surface mounting.
4. Pilot light.

1.3 INSTALLATION
A. Wall-Mounted Controllers: Install enclosed controllers on walls with tops at uniform height, and with disconnect operating handles not higher than 79 inches (2006 mm) above finished floor, unless otherwise indicated, and by bolting units to wall or mounting on lightweight structural-steel channels bolted to wall. For controllers not at walls, provide freestanding racks complying with Section 260529 "Hangers and Supports for Electrical Systems."
B. Seismic Bracing: Comply with requirements specified in Section 260548 "Vibration and Seismic Controls for Electrical Systems."
C. Install heaters in thermal overload relays. Select heaters based on actual nameplate full-load amperes after motors have been installed.
D. Identify enclosed controllers, components, and control wiring. Comply with requirements for identification specified in Section 260553 "Identification for Electrical Systems."
1. Label each enclosure with engraved nameplate.

1.4 ADJUSTING
A. Set field-adjustable switches and overload-relay pickup and trip ranges.

SECTION 265100 - INTERIOR LIGHTING

1.1 ACTION SUBMITTALS
A. Product Data: For each type of lighting fixture, arranged in order of fixture designation. Include data on features, accessories, and finishes.

1.2 QUALITY ASSURANCE
A. Electrical Components, Devices, and Accessories: Listed and labeled as defined in NFPA 70, by a qualified testing agency, and marked for intended location and application.
B. Comply with NFPA 70.

1.3 GENERAL REQUIREMENTS FOR LIGHTING FIXTURES AND COMPONENTS
A. Recessed Fixtures: Comply with NEMA LE 4 for ceiling compatibility for recessed fixtures.
B. Fluorescent Fixtures: Comply with UL 1598. Where LER is specified, test according to NEMA LE 5 and NEMA LE 5A as applicable.
C. HID Fixtures: Comply with UL 1598. Where LER is specified, test according to NEMA LE 5B.
D. Metal Parts: Free of burrs and sharp corners and edges.
E. Diffusers and Globes:
1. Acrylic Lighting Diffusers: 100 percent virgin acrylic plastic. High resistance to yellowing and other changes due to aging, exposure to heat, and UV radiation.
a. Lens Thickness: At least 0.125 inch minimum unless otherwise indicated.
b. UV stabilized.

1.4 LED LUMINAIRES
A. Solid State Drivers and LED: Comply with DOE LM 79
1. Total Harmonic Distortion Rating: Less than 10 percent
2. Transient Voltage protection
3. Power factor: 0.90 or higher
4. Temperatures: Minus 40 deg F (minus 40 deg C) and higher
5. Heat sink to remove heat from circuits
6. L70 compliant to 70,000 hours minimum
7. Color Rendering Index: 80 CRI minimum
8. Dimmable
a. Dimming Range: 100 to 1 percent of rated lamp lumens
b. Input watts: Can be reduced to 20 percent of normal
B. Emergency Battery Pack: Minimum 1100 lumen output.

1.5 BALLASTS FOR FLUORESCENT LAMPS
A. General Requirements for Electronic Ballasts:
1. Comply with UL 935 and with ANSI C82.11.
2. Designed for type and quantity of lamps served.
3. Program-Start

1.6 EMERGENCY FLUORESCENT POWER UNIT
A. Internal Type: Self-contained, modular, battery-inverter unit, factory mounted within lighting fixture body and compatible with ballast. Comply with UL 924.
1. Emergency Connection: Operate one fluorescent lamp(s) continuously at an output of 1100 lumens each. Connect unswitched circuit to battery-inverter unit and switched circuit to fixture ballast.
2. Nightlight Connection: Operate one fluorescent lamp continuously.
3. Test Push Button and Indicator Light:
4. Battery: Sealed, maintenance-free, nickel-cadmium type.
5. Charger:
6. Integral Self-Test:

1.7 BALLASTS FOR HID LAMPS
A. Electronic Ballast for Metal-Halide Lamps.

1.8 EXIT SIGNS
A. General Requirements for Exit Signs: Comply with UL 924; for sign colors, visibility, luminance, and lettering size, comply with authorities having jurisdiction.
B. Internally Lighted Signs:
1. Lamps for AC Operation: LEDs, 50,000 hours minimum rated lamp life.
2. Self-Powered Exit Signs (Battery Type): Integral automatic charger in a self-contained power pack.

1.9 FLUORESCENT LAMPS
A. T8 rapid-start lamps CRI 85 (minimum), color temperature 3500 K, and average rated life 20,000 hours unless otherwise indicated.

1.10 HID LAMPS
A. Pulse-Start, Metal-Halide Lamps: Minimum CRI 65, and color temperature 4000 K.

1.11 LIGHTING FIXTURE SUPPORT COMPONENTS
A. Wires: ASTM A 641/A 641M, Class 3, soft temper, zinc-coated steel, 12 gage.
B. Wires for Humid Spaces: ASTM A 580/A 580M, Composition 302 or 304, annealed stainless steel, 12 gage.

1.12 INSTALLATION
A. Lighting fixtures: Set level, plumb, and square with ceilings and walls. Install lamps in each fixture.
B. Comply with NFPA 70 for minimum fixture supports.

1.13 FIELD QUALITY CONTROL
A. Test for Emergency Lighting: Interrupt power supply to demonstrate proper operation. Verify transfer from normal power to battery and retransfer to normal.

SECTION 270528 - PATHWAYS FOR COMMUNICATIONS SYSTEMS

1.1 ACTION SUBMITTALS
A. Product Data: For each type of product.
B. Shop Drawings: For each type of cable tray.
C. Delegated-Design Submittal: For seismic restraints.

1.2 METAL CONDUITS AND FITTINGS
A. See section 260533 "Raceways and boxes for Electrical Systems".

1.3 BOXES, ENCLOSURES, AND CABINETS
A. See section 260533 "Raceways and boxes for Electrical Systems" unless otherwise indicated below.
B. Device Box Dimensions: 4 inches square by 2-1/2 inches deep.

1.4 HANDHOLES AND BOXES FOR EXTERIOR UNDERGROUND CABLING
A. See section 260533 "Raceways and boxes for Electrical Systems".

1.5 WIRE-BASKET CABLE TRAYS
A. Description:
1. Configuration: Wires are formed into a standard 2-by-4-inch wire mesh pattern with intersecting wires welded together. Mesh sections must have at least one bottom longitudinal wire along entire length of section.
2. Materials: High-strength-steel longitudinal wires with no bends.
3. Safety Provisions: Wire ends along wire-basket sides (flanges) rounded during manufacturing to maintain integrity of cables and installer safety.
4. Sizes:
a. Straight sections shall be furnished in standard 118-inch lengths.
b. Wire-Basket Depth: 4-inch usable loading depth by 12 inches wide.
5. Connector Assemblies: Bolt welded to plate shaped to fit around adjoining tray wires and mating plate. Mechanically joins adjacent tray wires to splice sections together or to create horizontal fittings.
6. Connector Assembly Capacity: Splices located within support span shall not diminish rated loading capacity of cable tray.
7. Hardware and Fasteners: ASTM F 593 and ASTM F 594 stainless steel, Type 316.

1.6 PATHWAY APPLICATION
A. See section 260533 "Raceways and boxes for Electrical Systems" unless otherwise indicated below.
B. Indoors: Apply pathway products as specified below unless otherwise indicated:
C. Minimum Pathway Size: 1 inch.

1.7 INSTALLATION
A. See section 260533 "Raceways and boxes for Electrical Systems" unless otherwise indicated below.
B. Install no more than the equivalent of two 90-degree bends in any pathway run. Support within 12 inches of changes in direction. Utilize long radius ells for all optical-fiber cables.
C. Stub-ups to Above Recessed Ceilings:
1. Use a conduit bushing or insulated fitting to terminate stub-ups not terminated in hubs or in an enclosure.
D. Coat field-cut threads on PVC-coated pathway with a corrosion-preventing conductive compound prior to assembly.
E. Terminate threaded conduits into threaded hubs or with locknuts on inside and outside of boxes or cabinets. Install insulated bushings on conduits terminated with locknuts.
F. Do not rely on locknuts to penetrate nonconductive coatings on enclosures. Remove coatings in the locknut area prior to assembling conduit to enclosure to assure a continuous ground path.
G. Spare Pathways: Install pull wires in empty pathways. Cap underground pathways designated as spare above grade alongside pathways in use.
H. Pathways for Communications Cable: Install pathways as follows:
1. 1-Inch Trade Size and Larger: Install pathways in maximum lengths of 75 feet.
2. Install with a maximum of two 90-degree bends or equivalent for each length of pathway unless Drawings show stricter requirements.

1.8 INSTALLATION OF UNDERGROUND CONDUIT
A. See section 260533 "Raceways and boxes for Electrical Systems" unless otherwise indicated below.

1.9 INSTALLATION OF UNDERGROUND HANDHOLES AND BOXES
A. See section 260533 "Raceways and boxes for Electrical Systems" unless otherwise indicated below.

SECTION 271500 - COMMUNICATIONS CABLING

1.1 PERFORMANCE REQUIREMENTS
A. General Performance: Horizontal cabling system shall comply with transmission standards in TIA/EIA-568-B.1, when tested according to test procedures of this standard.

1.2 QUALITY ASSURANCE
A. Surface-Burning Characteristics: As determined by testing identical products according to ASTM E 84 by a qualified testing agency. Identify products with appropriate markings of applicable testing agency.
1. Flame-Spread Index: 25 or less.
2. Smoke-Developed Index: 50 or less.
B. Telecommunications Pathways and Spaces: Comply with TIA/EIA-569-A.
C. Grounding: Comply with ANSI-J-STD-607-A.

1.3 DELIVERY, STORAGE, AND HANDLING
A. Test cables upon receipt at Project site. Test each pair of UTP cable for open and short circuits.

1.4 PATHWAYS
A. Cable Support: NRTL labeled for support of Category 6 cabling, designed to prevent degradation of cable performance and pinch points that could damage cable.
1. Support brackets with cable tie slots for fastening cable ties to brackets.
2. Lacing bars, spools, J-hooks, and D-rings.
3. Straps and other devices.
B. Conduit and Boxes: Comply with requirements in Division 26 Section "Raceway and Boxes for Electrical Systems." Flexible metal conduit shall not be used.
1. Outlet boxes shall be no smaller than 2 inches wide, 3 inches high, and 2-1/2 inches deep.

1.5 LABELING
A. Comply with TIA/EIA-606-A and UL 969 for a system of labeling materials, including label stocks, laminating adhesives, and inks used by label printers.

1.6 GROUNDING
A. Comply with requirements in Division 26 Section "Grounding and Bonding for Electrical Systems" for grounding conductors and connectors.

1.7 BACKBOARDS
A. Backboards: Plywood, fire-retardant treated, 3/4 by 48 by 96 inches.

1.8 UTP CABLE
A. Description: 100-ohm, 4-pair UTP, covered with a blue thermoplastic jacket.
1. Comply with ICEA S-90-661 for mechanical properties.
2. Comply with TIA/EIA-568-B.1 for performance specifications.
3. Comply with TIA/EIA-568-B.2, Category 6.
4. Listed and labeled by an NRTL acceptable to authorities having jurisdiction as complying with UL 444 and NFPA 70 for the following types:
a. Communications, General Purpose: Type CM or CMG; or MPP, CMP, MPR, CMR, MP, or MPG.
b. Communications, Plenum Rated: Type CMP or MPP, complying with NFPA 262.

1.9 UTP CABLE HARDWARE
A. General Requirements for Cable Connecting Hardware: Comply with TIA/EIA-568-B.2, IDC type, with modules designed for punch-down caps or tools. Cables shall be terminated with connecting hardware of same category or higher.
B. Connecting Blocks: 110-style IDC for Category 6.
C. Cross-Connect: Modular array of connecting blocks arranged to terminate building cables and permit interconnection between cables.
1. Number of Terminals per Field: One for each conductor in assigned cables.
D. Patch Panel: Modular panels housing multiple-numbered jack units with IDC-type connectors at each jack for permanent termination of pair groups of installed cables.
1. Number of Jacks per Field: One for each four-pair UTP cable indicated.
E. Jacks and Jack Assemblies: Modular, color-coded, eight-position modular receptacle units with integral IDC-type terminals.
F. Patch Cords: Factory-made, four-pair cables in varying lengths; terminated with eight-position modular plug at each end.
1. Patch cords shall have bend-relief-compliant boots and color-coded icons to ensure Category 6 performance. Patch cords shall have latch guards to protect against snagging.

1.10 COAXIAL CABLE
A. General Coaxial Cable Requirements: Broadband type, recommended by cable manufacturer specifically for broadband data transmission applications. Coaxial cable and accessories shall have 75-ohm nominal impedance with a return loss of 20 dB maximum from 7 to 806 MHz.
B. RG-6/U (Plenum Rated): NFPA 70, Type CMP.
C. Coaxial-Cable Connectors: Type BNC, 75 ohms.

1.11 TELECOMMUNICATIONS OUTLET/CONNECTORS
A. Jacks: 100-ohm, balanced, twisted-pair connector; four-pair, eight-position modular. Comply with TIA/EIA-568-B.1.
B. Workstation Outlets: Four and six-port-connector assemblies mounted in single faceplate.
1. For use with snap-in jacks accommodating any combination of UTP work area cords.
2. Legend: Snap-in, clear-label covers and machine-printed paper inserts.

1.12 IDENTIFICATION PRODUCTS
A. Comply with TIA/EIA-606-A and UL 969 for a system of labeling materials, including label stocks, laminating adhesives, and inks used by label printers.
B. Comply with requirements in Division 26 Section "Identification for Electrical Systems."

1.13 WIRING METHODS
A. Wiring Method: Install cables in raceways and cable trays except within consoles, cabinets, desks, and counters and except in accessible ceiling spaces, in attics, and in gypsum board partitions where unenclosed wiring method may be used. Conceal raceway and cables except in unfinished spaces.
1. Install plenum cable in environmental air spaces, including plenum ceilings.
2. Comply with requirements for raceways and boxes specified in Division 26 Section "Raceway and Boxes for Electrical Systems."
B. Wiring within Enclosures: Bundle, lace, and train cables to terminal points with no excess and without exceeding manufacturer's limitations on bending radii. Provide and use lacing bars and distribution spools.

1.14 INSTALLATION OF PATHWAYS
A. Comply with TIA/EIA-569-A for pull-box sizing and length of conduit and number of bends between pull points.
B. Comply with requirements in Division 26 Section "Raceway and Boxes for Electrical Systems" for installation of conduits and wireways.
C. Install manufactured conduit sweeps and long-radius elbows.
D. Pathway Installation in Communications Equipment Rooms:
1. Position conduit ends adjacent to a corner on backboard where a single piece of plywood is installed, or in the corner of room where multiple sheets of plywood are installed around perimeter walls of room.
2. Secure conduits to backboard when entering room from overhead.
3. Install metal conduits with grounding bushings and connect with grounding conductor to grounding system.

1.15 INSTALLATION OF CABLES
A. Comply with NECA 1.
B. General Requirements for Cabling:
1. Comply with TIA/EIA-568-B.1.
2. Comply with BICSI ITSIM, Ch. 6, "Cable Termination Practices."
3. Install 110-style IDC termination hardware unless otherwise indicated.
4. Terminate conductors; no cable shall contain unterminated elements.
5. Pulling Cable: Comply with BICSI ITSIM, Ch. 4, "Pulling Cable." Monitor cable pull tensions.
C. UTP Cable Installation:
1. Comply with TIA/EIA-568-B.2.
D. Separation from EMI Sources:
1. Comply with BICSI TDMM and TIA/EIA-569-A for separating unshielded copper voice and data communication cable from potential EMI sources, including electrical power lines and equipment.

1.16 IDENTIFICATION
A. Identify system components, wiring, and cabling complying with TIA/EIA-606-A. Comply with requirements for identification specified in Division 26 Section "Identification for Electrical Systems."
1. Color-code cross-connect fields. Apply colors to voice and data service backboards, connections, covers, and labels.
B. Labels shall be preprinted or computer-printed type with printing area and font color that contrasts with cable jacket color but still complies with requirements in TIA/EIA-606-A.

Copyright 2016 AIA MasterSpec Professional 03/16

ZONED (DC LOOP) FIRE-ALARM SYSTEM283112 - 1SECTION 283112 - FIRE SPRINKLER MONITORING SYSTEM

PART 1 - GENERAL

1.1 SUMMARY
A. Section Includes:
1. Fire-Alarm control unit.
2. Manual fire-alarm boxes.
3. System smoke detectors.
4. Tamper Switch
5. Flow Switch
6. Notification appliances.

1.2 ACTION SUBMITTALS
A. Product Data: For each type of product, including furnished options and accessories.
B. Shop Drawings: For fire sprinkler monitoring system.
1. Comply with recommendations and requirements in the "Documentation" section of the "Fundamentals" chapter in NFPA 72.
2. Include details of required clearances, components, and locations. Indicate conductor sizes, indicate termination locations and requirements, and distinguish between factory and field wiring.
3. Include battery size calculations.
4. Include input/output matrix.
5. Include statement from manufacturer that all equipment and components have been tested as a system and meet all requirements in this Specification and in NFPA 72.
6. Include floor plans to indicate final outlet locations showing zone designation of each device. Show size and route of cable and conduits and point-to-point wiring diagrams.
C. General Submittal Requirements:
1. Submittals shall be approved by authorities having jurisdiction prior to submitting them to Architect.
2. Shop Drawings shall be prepared by persons with the following qualifications:
a. Trained and certified by manufacturer in fire-alarm system design.
b. NICET-certified fire-alarm technician; Level IV minimum.
c. Licensed or certified by authorities having jurisdiction.
D. Delegated-Design Submittal: Complete Fire Riser Monitoring System in compliance with performance requirements and design criteria, including analysis data, signed and sealed by the qualified professional engineer responsible for their preparation.
1. Drawings showing the location of Fire Riser Monitoring Equipment including Tamper Switch, Flow Switch, Audible Device.
2. Drawings shall include pull station, smoke, and horn strobe adjacent to Monitoring panel where required by local codes.
3. Connection requirements for wired dialer

1.3 INFORMATIONAL SUBMITTALS
A. Qualification Data: For Installer.
B. Seismic Qualification Data: Certificates, for fire-alarm control unit, accessories, and components, from manufacturer.
C. Field quality-control reports.
D. Sample warranty.

1.4 CLOSEOUT SUBMITTALS
A. Operation and Maintenance Data: For fire-monitoring systems and components to include in emergency, operation, and maintenance manuals.

1.5 WARRANTY
A. Special Warranty: Manufacturer agrees to repair or replace fire-alarm system equipment and components that fail in materials or workmanship within specified warranty period.
1. Warranty Extent: All equipment and components not covered in the Maintenance Service Agreement.
2. Warranty Period: Five years from date of Substantial Completion.

PART 2 - PRODUCTS

2.1 SYSTEM DESCRIPTION
A. Source Limitations for Fire-Alarm System and Components: Provide system manufacturer's certification that all components provided have been tested as, and will operate as, a system.
B. Noncoded system dedicated to fire-alarm service only.
C. All components provided shall be listed for use with the selected system.
D. Electrical Components, Devices, and Accessories: Listed and labeled as defined in NFPA 70, by a qualified testing agency, and marked for intended location and application.

2.2 SYSTEMS OPERATIONAL DESCRIPTION
A. Fire-Monitoring signal initiation shall be by one or more of the following devices:
1. Manual stations.
2. Automatic sprinkler system water flow.
B. Fire-alarm signal shall initiate the following actions:
1. Transmit an alarm signal to the remote alarm receiving station.
2. Record events in the system memory.
C. Supervisory signal initiation shall be by one or more of the following devices and systems:
1. Valve supervisory switch.
D. System trouble signal initiation shall be by one or more of the following devices and actions:
1. Open circuits, shorts, and grounds in designated circuits.
2. Opening, tampering with, or removing alarm-initiating and supervisory signal-initiating devices.
3. Loss of primary power at fire-alarm control unit.
4. Ground or a single break in internal circuits of fire-monitoring control unit.
5. Abnormal ac voltage at fire-monitoring control unit.
6. Break in standby battery circuitry.
7. Failure of battery charging.
E. System Trouble and Supervisory Signal Actions:
1. Initiate audible devices.
2. Annunciate at fire-alarm control unit.

2.3 FIRE-ALARM CONTROL UNIT
A. General Requirements for Fire-Alarm Control Unit:
1. Modular, power-limited design with electronic modules, UL 864 listed.
a. Include a real-time clock for time annotation of events.
b. The FACP shall be listed for connection to a central-station signaling system service.
B. Alphanumeric Display and System Controls: Display alarm, supervisory, and component status messages and the programming and control menu.
1. Annunciator and Display
C. Primary Power: Dedicated electrical 120v. 20 A circuit
D. Secondary Power: 24-V dc supply system with batteries, automatic battery charger, and automatic transfer switch.

2.4 MANUAL FIRE-ALARM BOXES
A. General Requirements for Manual Fire-Alarm Boxes: Comply with UL 38.

2.5 NOTIFICATION APPLIANCES
A. General Requirements for Notification Appliances: Connected to notification-appliance signal circuits, zoned as indicated, equipped for mounting as indicated, and with screw terminals for system connections.
1. Combination Devices: Factory-integrated audible and visible devices in a single-mounting assembly, equipped for mounting as indicated, and with screw terminals for system connections.
B. Chimes, High-Level Output: Vibrating type.
C. Horns: Electric-vibrating-polarized type, 24-V dc; with provision for housing the operating mechanism behind a grille. Comply with UL 464.
D. Visible Notification Appliances: Xenon strobe lights complying with UL 1971, with clear or nominal white polycarbonate lens mounted on an aluminum faceplate. The word "FIRE" is engraved in minimum 1-inch- (25-mm-) high letters on the lens.
1. Mounting: Wall mounted unless otherwise indicated.
2. Flashing shall be in a temporal pattern, synchronized with other units.
3. Strobe Leads: Factory connected to screw terminals.
4. Mounting Faceplate: Factory finished, **red**

2.6 EQUIPMENT INSTALLATION
A. Comply with NFPA 72, NFPA 101, and requirements of authorities having jurisdiction for installation and testing of fire-alarm equipment. Install all electrical wiring to comply with requirements in NFPA 70 including, but not limited to, Article 760, "Fire Alarm Systems."
B. Install wall-mounted equipment, with tops of cabinets not more than 78 inches (1980 mm) above the finished floor.
1. Comply with requirements for seismic-restraint devices specified in Section 260548.16 "Seismic Controls for Electrical Systems."
C. Manual Fire-Alarm Boxes:
1. Install manual fire-alarm box in the normal path of egress within 60 inches (1520 mm) of the exit doorway.
2. Mount manual fire-alarm box on a background of a contrasting color.
3. The operable part of manual fire-alarm box shall be between 42 inches (1060 mm) and 48 inches (1220 mm) above floor level. All devices shall be mounted at the same height unless otherwise indicated.
D. Audible Alarm-Indicating Devices: Install not less than 6 inches (150 mm) below the ceiling. Install bells and horns on flush-mounted back boxes with the device-operating mechanism concealed behind a grille. Install all devices at the same height unless otherwise indicated.
E. Visible Alarm-Indicating Devices: Install adjacent to each alarm bell or alarm horn and at least 6 inches (150 mm) below the ceiling. Install all devices at the same height unless otherwise indicated.

2.7 PATHWAYS
A. Pathways above recessed ceilings and in nonaccessible locations may be routed exposed.
1. Exposed pathways located less than 96 inches (2440 mm) above the floor shall be installed in EMT.
B. Pathways shall be installed in EMT.
C. Exposed EMT shall be painted red enamel.

2.8 CONNECTIONS
A. Connect supervised interface devices to the following devices and systems. Install the interface device less than 36 inches (910 mm) from the device controlled.
1. Supervisory connections at valve supervisory switches.

2.9 IDENTIFICATION
A. Identify system components, wiring, cabling, and terminals. Comply with requirements for identification specified in Section 260553 "Identification for Electrical Systems."
B. Install framed instructions in a location visible from fire-alarm control unit.

2.10 GROUNDING
A. Ground fire-alarm control unit and associated circuits; comply with IEEE 1100. Install a ground wire from main service ground to fire-alarm control unit.
B. Ground shielded cables at the control panel location only. Insulate shield at device location.

2.11 FIELD QUALITY CONTROL
A. Fire-alarm system will be considered defective if it does not pass tests and inspections.

2.12 DEMONSTRATION
A. Train Owner's maintenance personnel to adjust, operate, and maintain fire-alarm system.

END OF SECTION 283112

SINE SOURCE ENGINEERING
95 W Golf Course Road
Suite 102
Logan, Ut 84321
office: (435) 787-1445
fax: 1-877-207-3199
www.sinesource.net

The design represented by these drawings are, and shall remain the property of Sine Source Engineering, LLC and as such Sine Source Engineering, LLC retains total ownership and control. The design represented by these drawings is sold to the client listed in the titleblock for a one time use at the propety indicated.
Any other use or reproduction must be permitted in writing by Sine Source Engineering, LLC.

CONSULTANTS

REGISTERED PROFESSIONAL ENGINEER
No. 6013611
ERIC C. RASMUSSEN
8/17/2022
STATE OF UTAH

CLARKSTON CITY HALL
ADDITION & REMODEL PROJECT
25 SOUTH MAIN STREET
CLARKSTON, UTAH 84305

MARK	DATE	DESCRIPTION

ISSUE:	Construction Documents
PROJECT NUMBER:	2022034
DATE:	AUGUST 17, 2022
DESIGNED BY:	ECR
DRAWN BY:	DDS

SPECIFCATIONS

E003

LAST SAVE 8/17/2022 T:\JOBS\2022\034 CLARKSTON CITY BLDG\01 DRAWINGS\05 ELECTRICAL\SINE SOURCE PROJECT\SHEETS\E003 SPECIFCATIONS.DWG
LAST SAVED: 17 Aug 22

SHEET KEYED NOTES

1. PROTECT EXISTING SERVICE UNTIL BUILDING SWITCHOVER IS COMPLETE. AFTER SERVICE SWITCHOVER: DEMO EXISTING ELECTRICAL SERVICE AND SERVICE LATERAL CONDUCTORS.
2. CUT, REMOVE, AND REPLACE ASPHALT FOR NEW UNDERGROUND UTILITIES. COORDINATE WITH EACH UTILITY PRIOR TO TRENCHING.
3. COORDINATE NEW UTILITY OVERHEAD TV/INTERNET CONNECTION WITH LOCAL UTILITY REP.

GENERAL SHEET NOTES

1. PROTECT EXISTING BUILDING SERVICE AND PANELS AS NEEDED DURING CONSTRUCTION TO KEEP BUILDING OPERATIONAL UNTIL SWITCHOVER.
2. EXISTING ITEMS TO BE REMOVED ARE INDICATED AS BOLD/DASHED. ITEMS TO REMAIN ARE SHOWN AS LIGHT/SOLID.
3. CIRCUIT ROUTING IS SCHEMATIC UNLESS OTHERWISE NOTED.
4. COORDINATE ALL UTILITY INSTALLATIONS WITH LOCAL UTILITY REPS.
5. COMPLY WITH ALL UTILITY REQUIREMENTS FOR NEW UTILITY INSTALLATIONS

SINE SOURCE ENGINEERING
95 W Golf Course Road
Suite 102
Logan, Ut 84321
office: (435) 787-1445
fax: 1-877-207-3199
www.sinesource.net

The design represented by these drawings are, and shall remain the property of Sine Source Engineering, LLC and as such Sine Source Engineering, LLC retains total ownership and control. The design represented by these drawings is sold to the client listed in the titleblock for a one time use at the propety indicated.
Any other use or reproduction must be permitted in writing by Sine Source Engineering, LLC.

CONSULTANTS

REGISTERED PROFESSIONAL ENGINEER
No. 6813611
ERIC C. RASMUSSEN
8/17/2022
STATE OF UTAH

CLARKSTON CITY HALL

ADDITION & REMODEL PROJECT
25 SOUTH MAIN STREET
CLARKSTON, UTAH 84305

MARK	DATE	DESCRIPTION

ISSUE:	Construction Documents
PROJECT NUMBER:	2022034
DATE:	AUGUST 17, 2022
DESIGNED BY:	ECR
DRAWN BY:	DDS

ELECTRICAL SITE PLAN

ES101

1 ELECTRICAL SITE PLAN: DEMO
Scale: 1"=20'-0"

2 ELECTRICAL SITE PLAN: NEW
Scale: 1"=20'-0"

LAST SAVE 8/17/2022 T:\JOBS\2022\2034 CLARKSTON CITY BLDG\01 DRAWINGS\05 ELECTRICAL\SINE SOURCE PROJECT SHEETS\ES101 ELECTRICAL SITE PLAN.DWG
LAST SAVED: 17 Aug 22

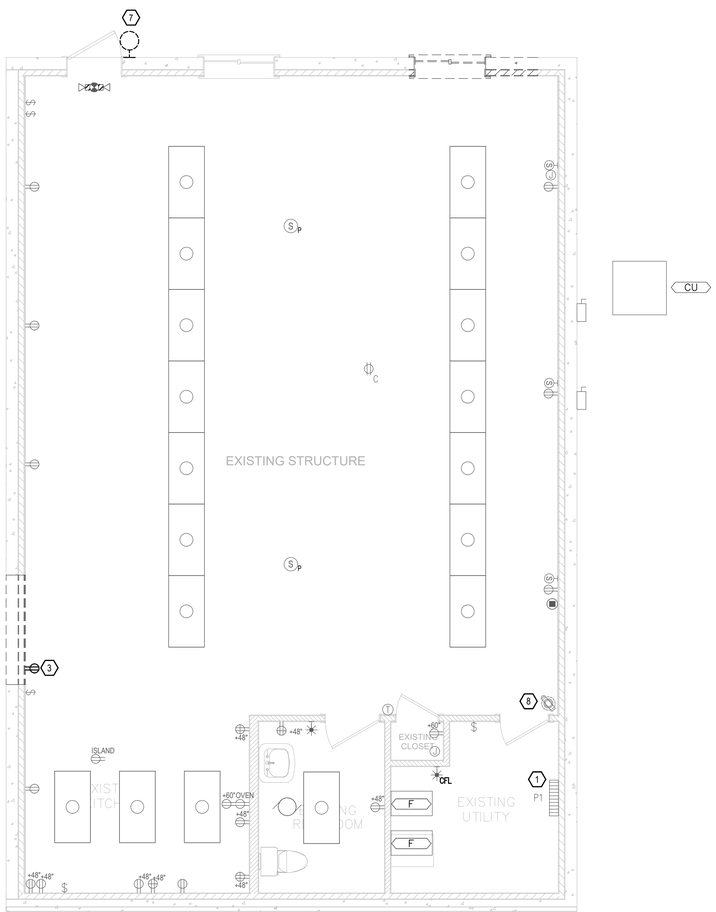

1 ELECTRICAL DEMOLITION PLANS: LOWER LEVEL
Scale: 1/4"=1'-0"

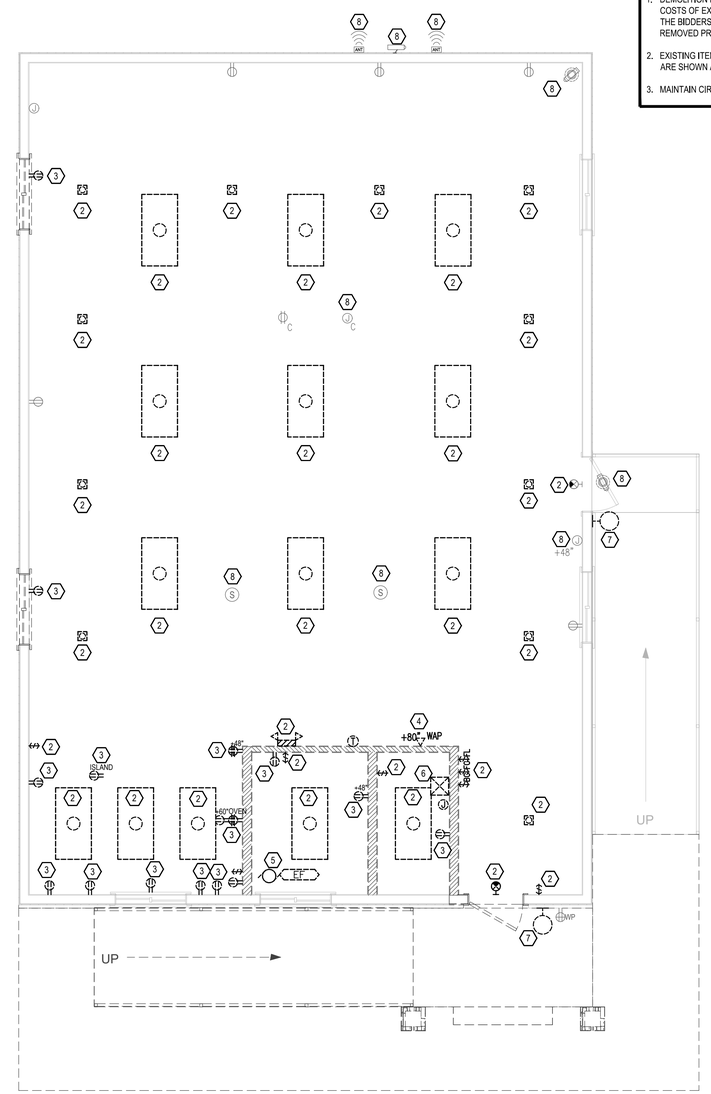

2 ELECTRICAL DEMOLITION PLANS: UPPER LEVEL
Scale: 1/4"=1'-0"

SHEET KEYED NOTES

1. EXISTING PANEL TO REMAIN. RE-FEED AS INDICATED ON SHEET E601.
2. REMOVE EXISTING FIXTURES AND/OR LIGHTING CONTROL AS INDICATED.
3. REMOVE EXISTING OUTLETS AS INDICATED.
4. REMOVE EXISTING COMMUNICATIONS DEVICES AS INDICATED.
5. DISCONNECT EXISTING EQUIPMENT FOR REMOVAL BY OTHERS.
6. RELOCATE DATA RACK AND SECURITY HEAD END TO NEW LOCATION INDICATED ON SHEET E401. REPLACE AND REROUTE CABLES TO NEW LOCATION.
7. REPLACE EXISTING FIXTURE WITH NEW AS INDICATED SHEETS E200 AND E201.
8. PROTECT EXISTING ELECTRONIC DEVICE DURING CONSTRUCTION. REPLACE EXISTING CABLE AND RE-ROUTE TO RELOCATED RACK.

GENERAL SHEET NOTES

1. DEMOLITION PLAN IS ENGINEER'S ATTEMPT TO ASSIST BIDDERS IN ESTIMATING REMOVAL COSTS OF EXISTING EQUIPMENT. PLAN IS NOT INTENDED TO BE ALL-INCLUSIVE, AND IT IS THE BIDDERS RESPONSIBILITY TO VERIFY ALL EXISTING EQUIPMENT AND DEVICES TO BE REMOVED PRIOR TO BIDDING.
2. EXISTING ITEMS TO BE REMOVED ARE INDICATED AS BOLD/DASHED. ITEMS TO REMAIN ARE SHOWN AS LIGHT/SOLID.
3. MAINTAIN CIRCUIT CONTINUITY FOR DEVICES DOWNSTREAM OF ITEMS TO BE REMOVED.

SINE SOURCE ENGINEERING
95 W Golf Course Road
Suite 102
Logan, Ut 84321
office: (435) 787-1445
fax: 1-877-207-3199
www.sinesource.net

The design represented by these drawings are, and shall remain the property of Sine Source Engineering, LLC and as such Sine Source Engineering, LLC retains total ownership and control. The design represented by these drawings is sold to the client listed in the titleblock for a one time use at the propety indicated.
Any other use or reproduction must be permitted in writing by Sine Source Engineering, LLC.

CONSULTANTS

REGISTERED PROFESSIONAL ENGINEER
No. 6813611
ERIC C. RASMUSSEN
8/17/2022
STATE OF UTAH

CLARKSTON CITY HALL

ADDITION & REMODEL PROJECT
25 SOUTH MAIN STREET
CLARKSTON, UTAH 84305

MARK	DATE	DESCRIPTION
ISSUE:		Construction Documents
PROJECT NUMBER:		2022034
DATE:		AUGUST 17, 2022
DESIGNED BY:		ECR
DRAWN BY:		DDS

ELECTRICAL DEMOLITION PLANS

ED101

LAST SAVE 6/20/2022 T:\JOBS\2022\2034 CLARKSTON CITY BLDG\01 DRAWINGS\05 ELECTRICAL\SINE SOURCE PROJECT\SHEETS\ED101 ELECTRICAL DEMOLITION PLAN.DWG
LAST SAVED: 20 Jun 22

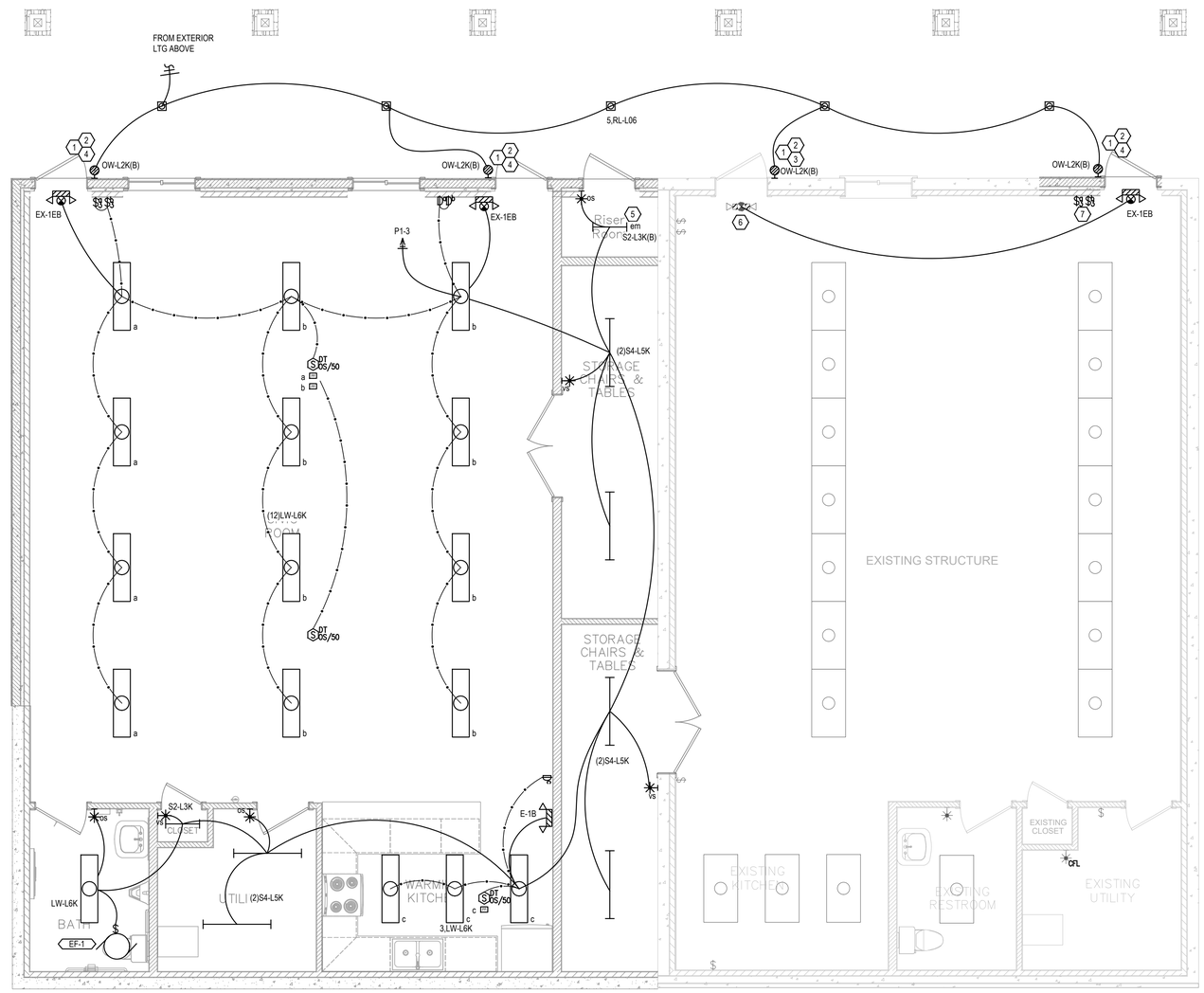

1 LIGHTING PLAN - LOWER LEVEL
Scale: 1/4"=1'-0"

SHEET KEYED NOTES

1. PROVIDE COLD-WEATHER OR REMOTE EM BATTERY BACKUP FOR FIXTURES NOTED. CONNECT BATTERY TO UNSWITCHED CIRCUIT CONDUCTOR OF CIRCUIT SERVING FIXTURE. CONNECT LAMPS TO OPERATE WITH SWITCH(S) IN NORMAL MODE.
2. CONNECT BATTERY TO UNSWITCHED CIRCUIT CONDUCTOR.
3. REPLACE EXISTING FIXTURE WITH NEW.
4. PROVIDE NEW FIXTURE. MATCH EXISTING WALL SCONCE HEIGHT.
5. PROVIDE EM BATTERY PACK IN FIXTURES NOTED. CONNECT BATTERY TO UNSWITCHED CIRCUIT CONDUCTOR OF CIRCUIT SERVING FIXTURE. CONNECT FIXTURE(S) TO OPERATE WITH SWITCH(S) IN NORMAL MODE.
6. INTEGRATE NEW FIXTURE INTO EXISTING CIRCUIT WITH (3)#12 THHN CU CONCONDUCTORS IN 3/4" CONDUIT.
7. PROVIDE NEW SWITCH AND INTEGRATE INTO EXISTING LIGHTING CONTROL SERVING ROOM.

GENERAL SHEET NOTES

1. CONNECT OCCUPANCY SENSORS TO ENABLE ALL SWITCHES IN CONTROLLED SPACE.
2. CONNECT OCCUPANCY SENSORS, BATTERY BALLASTS, EXIT SIGNS, ETC. TO UNSWITCHED SOURCE CONDUCTOR.
3. SEE POWER PLAN FOR ELECTRICAL DISTRIBUTION, EQUIPMENT AND LIGHTING RELAY PANEL LOCATIONS.
4. ALL EMERGENCY LIGHTING BATTERIES SHALL PROVIDE A MINIMUM OF 90 MINUTES ILLUMINATION PER NEC 700.12(A) AND IBC 1006. SEE SPEC SECTION 265100 FOR ADDITIONAL REQUIREMENTS.
5. ALL NEW LIGHTING CONTROLS (SWITCH, OCCUPANCY SENSORS, DIMMERS, ETC.) IN ROOMS WITH AUTO ON TO 50%, SENSORS SHALL BE LITHONIA N-LIGHT, WATTSTOPPER DLM, DOUGLASS DIALOG, LUTRON VIVE OR OTHER SIMILAR SYSTEM THAT ALLOWS SWITCHES AND SENSORS TO COMMUNICATE TO MEET AUTO ON TO 50%, MANUAL ON TO 100%, AUTO OFF REQUIREMENTS OF ENERGY CODE. REFER TO LIGHTING CONTROL SHOP DRAWINGS FOR WIRING REQUIREMENTS.

SINE SOURCE ENGINEERING
95 W Golf Course Road
Suite 102
Logan, Ut 84321
office: (435) 787-1445
fax: 1-877-207-3199
www.sinesource.net

The design represented by these drawings are, and shall remain the property of Sine Source Engineering, LLC and as such Sine Source Engineering, LLC retains total ownership and control. The design represented by these drawings is sold to the client listed in the titleblock for a one time use at the propety indicated.
Any other use or reproduction must be permitted in writing by Sine Source Engineering, LLC.

CONSULTANTS

REGISTERED PROFESSIONAL ENGINEER
No. 6813611
ERIC C. RASMUSSEN
8/17/2022
STATE OF UTAH

CLARKSTON CITY HALL

ADDITION & REMODEL PROJECT
25 SOUTH MAIN STREET
CLARKSTON, UTAH 84305

MARK	DATE	DESCRIPTION

ISSUE:	Construction Documents
PROJECT NUMBER:	2022034
DATE:	AUGUST 17, 2022
DESIGNED BY:	ECR
DRAWN BY:	DDS

LIGHTING PLAN - LOWER LEVEL

E200

LAST SAVE 8/17/2022 T:\JOBS\2022\034 CLARKSTON CITY BLDG\01 DRAWING\SNS ELECTRICAL\SINE SOURCE PROJECT\SHEETS\E200 LIGHTING PLAN - LOWER LEVEL.DWG
LAST SAVED: 17 Aug 22

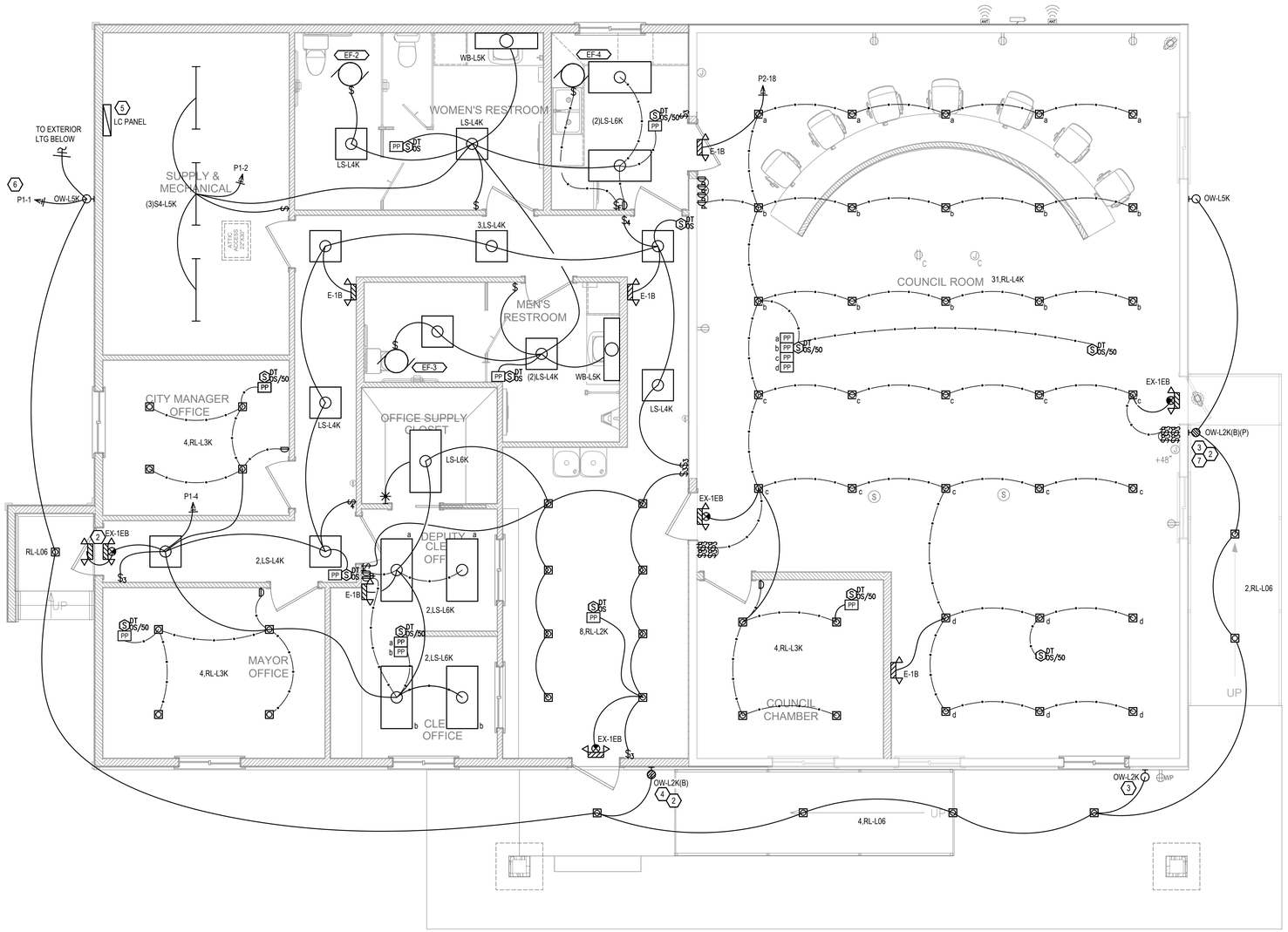

1 LIGHTING PLAN - UPPER LEVEL
Scale: 1/4"=1'-0"

SHEET KEYED NOTES

1. PROVIDE COLD-WEATHER OR REMOTE EM BATTERY BACKUP FOR FIXTURES NOTED. CONNECT BATTERY TO UNSWITCHED CIRCUIT CONDUCTOR OF CIRCUIT SERVING FIXTURE. CONNECT LAMPS TO OPERATE WITH SWITCH(S) IN NORMAL MODE.
2. PROVIDE EXIT SIGN WITH REMOTE EXTERIOR HEADS. WIRE EXTERIOR HEADS FROM EXIT SIGN'S BATTERY PER MANUFACTURER'S REQUIREMENTS.
3. REPLACE EXISTING FIXTURE WITH NEW.
4. PROVIDE NEW FIXTURE. MATCH EXISTING WALL SCONCE HEIGHT.
5. PROVIDE LIGHTING CONTROL PANEL (LEVITON EZ MAX R08BD W/ EXTERIOR PHOTOCELL AND RELAYS OR EQUIVALENT CONTROLLER) PROVIDE CIRCUIT FROM NEAREST PANEL FOR CONTROL. SCHEDULE PER OWNER.
6. ROUTE CIRCUIT THROUGH LIGHTING CONTROL PANEL LC. PROVIDE SEPARATE SWITCH LEGS FOR FRONT CANS, BACK CANS, AND WALL SCONCES. EXTEND CORRESPONDING SWITCH LEG TO ALL CONTROLLED FIXTURES.
7. PROVIDE FIXTURE WITH INTEGRAL PHOTOCELL. CIRCUIT WITH UNSWITCHED CIRCUIT CONDUCTOR.

GENERAL SHEET NOTES

1. CONNECT OCCUPANCY SENSORS TO ENABLE ALL SWITCHES IN CONTROLLED SPACE.
2. CONNECT OCCUPANCY SENSORS, BATTERY BALLASTS, EXIT SIGNS, ETC. TO UNSWITCHED SOURCE CONDUCTOR.
3. SEE POWER PLAN FOR ELECTRICAL DISTRIBUTION, EQUIPMENT AND LIGHTING RELAY PANEL LOCATIONS.
4. PROVIDE TRAVELER CONDUCTORS TO ENABLE ALL 3-WAY AND 4-WAY SWITCHES IN EACH AREA.
5. ALL NEW LIGHTING CONTROLS (SWITCH, OCCUPANCY SENSORS, DIMMERS, ETC.) IN ROOMS WITH AUTO ON TO 50% SENSORS SHALL BE LITHONIA N-LIGHT, WATTSTOPPER DLM, DOUGLASS DIALOG OR OTHER SIMILAR SYSTEM THAT ALLOWS SWITCHES AND SENSORS TO COMMUNICATE TO MEET AUTO ON TO 50%, MANUAL ON TO 100%, AUTO OFF REQUIREMENTS OF ENERGY CODE. REFER TO LIGHTING CONTROL SHOP DRAWINGS FOR WIRING REQUIREMENTS.

SINE SOURCE ENGINEERING
95 W Golf Course Road
Suite 102
Logan, Ut 84321
office: (435) 787-1445
fax: 1-877-207-3199
www.sinesource.net

The design represented by these drawings are, and shall remain the property of Sine Source Engineering, LLC and as such Sine Source Engineering, LLC retains total ownership and control. The design represented by these drawings is sold to the client listed in the titleblock for a one time use at the propety indicated.
Any other use or reproduction must be permitted in writing by Sine Source Engineering, LLC.

CONSULTANTS

REGISTERED PROFESSIONAL ENGINEER
No. 6813611
ERIC C. RASMUSSEN
8/17/2022
STATE OF UTAH

CLARKSTON CITY HALL
ADDITION & REMODEL PROJECT
25 SOUTH MAIN STREET
CLARKSTON, UTAH 84305

MARK	DATE	DESCRIPTION

ISSUE:	Construction Documents
PROJECT NUMBER:	2022034
DATE:	AUGUST 17, 2022
DESIGNED BY:	ECR
DRAWN BY:	DDS

LIGHTING PLAN - UPPER LEVEL

E201

LAST SAVE 8/17/2022 T:\JOBS\2022\034 CLARKSTON CITY BLDG\01 DRAWINGS\05 ELECTRICAL\SINE SOURCE PROJECT\SHEETS\E201 LIGHTING PLAN - UPPER LEVEL.DWG
LAST SAVED: 17 Aug 22

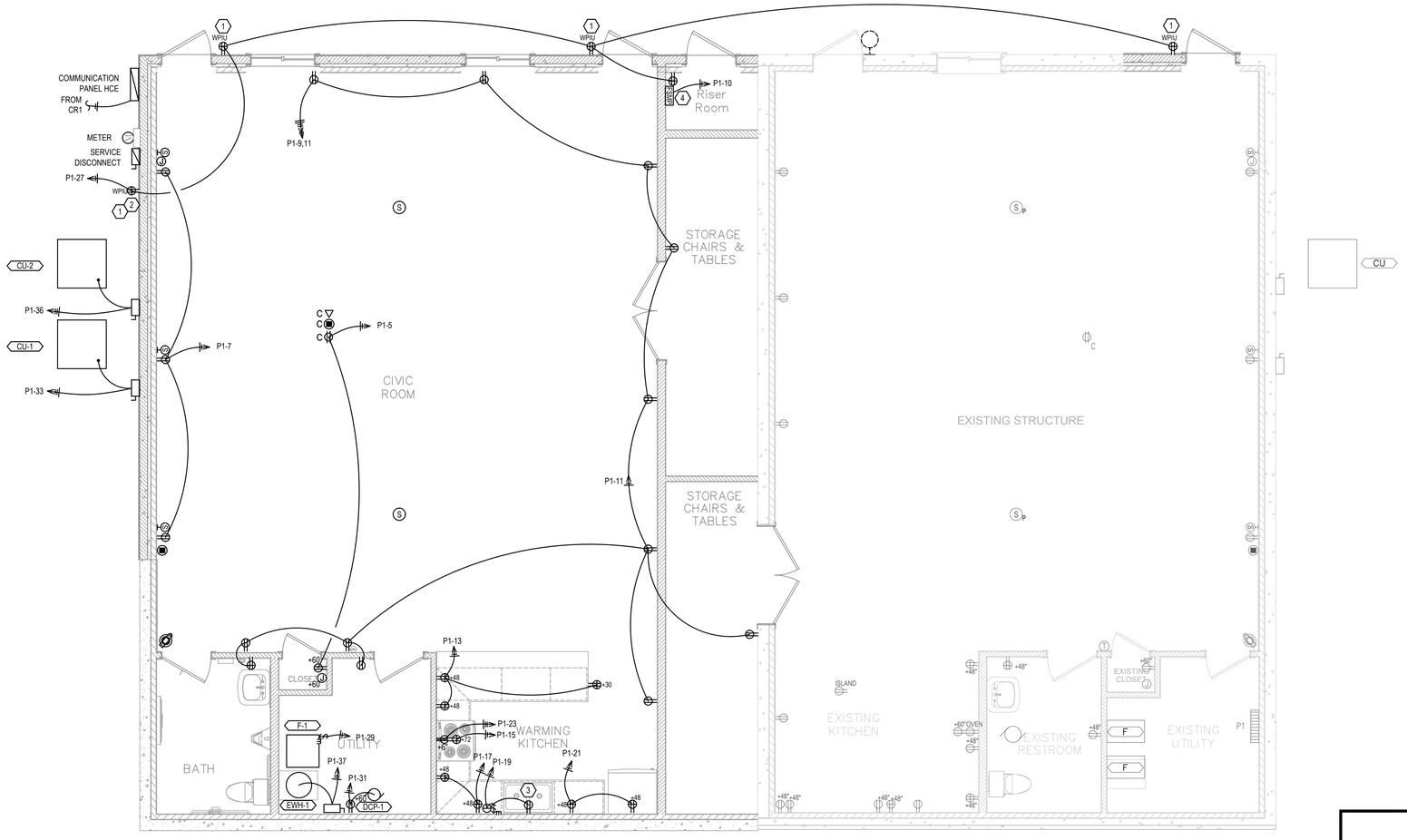

1 POWER PLAN - LOWER LEVEL
Scale: 1/4"=1'-0"

SHEET KEYED NOTES

1. PROVIDE WP-IN-USE, FLUSH-MOUNT BOX (ARLINGTON STEEL IN-BOX OR EQUIVALENT). COORDINATE TYPE WITH WALL CONSTRUCTION. FIELD PAINT INTERIOR AND TRIM TO MATCH BUILDING TRIM COLOR.
2. PROVIDE HVAC EQUIPMENT SERVICE OUTLET LOCATED PER NEC REQUIREMENTS.
3. PROVIDE SWITCHED RECEPTACLE UNDER KITCHEN BASIN FOR DISPOSAL. DISPOSAL BY OTHERS. COORDINATE DISPOSAL CORD WITH PLUMBING CONTRACTOR AND PROVIDE AND/OR INSTALL CORD AS REQUIRED. ROUTE CIRCUIT THROUGH FACELESS GFCI (LEVITON 7590 OR EQUIVALENT) MOUNTED ABOVE COUNTER LEVEL WITH COUNTER-TOP OUTLETS. LABEL GFCI FOR APPLIANCE SERVED.
4. PROVIDE FIRE SPRINKLER MONITORING PANEL. INCLUDE TAMPER SWITCH, FLOW SWITCH, AUDIBLE DEVICE, AND WIRED DIALER.

GENERAL SHEET NOTES

1. COORDINATE ALL SWITCH, OUTLET, LIGHT AND OTHER DEVICE LOCATIONS WITH ARCHITECTURAL ELEMENTS (CABINETS, WINDOWS ETC.) PRIOR TO ROUGH IN. REVIEW ARCHITECTURAL INTERIOR ELEVATIONS PRIOR TO ROUGH-IN OF EACH AREA FOR ADDITIONAL INFORMATION.
2. PROVIDE 4SD J-BOX WITH 1 GANG MUD RING AND 1" CONDUIT TO ACCESSIBLE CEILING SPACE FOR ALL VOICE/DATA/COMBO OUTLETS SHOWN ON FLOOR PLANS. PROVIDE INSULATED THROAT CONNECTORS ON BOTH ENDS OF CONDUIT. COMMUNICATIONS CABLING PROVIDED BY OWNER.

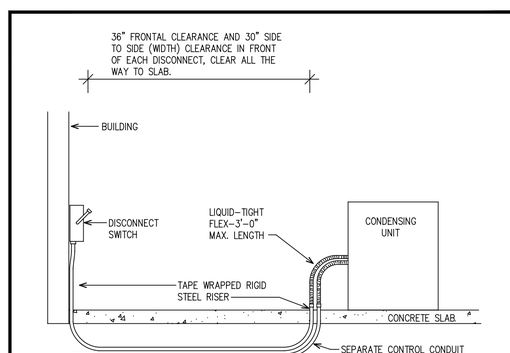

A CONDENSING UNIT CONDUIT DETAIL
SCALE: NO SCALE

SINE SOURCE ENGINEERING
95 W Golf Course Road
Suite 102
Logan, Ut 84321
office: (435) 787-1445
fax: 1-877-207-3199
www.sinesource.net

The design represented by these drawings are, and shall remain the property of Sine Source Engineering, LLC and as such Sine Source Engineering, LLC retains total ownership and control. The design represented by these drawings is sold to the client listed in the titleblock for a one time use at the propety indicated.
Any other use or reproduction must be permitted in writing by Sine Source Engineering, LLC.

CONSULTANTS

REGISTERED PROFESSIONAL ENGINEER
No. 6813611
ERIC C. RASMUSSEN
8/17/2022
STATE OF UTAH

CLARKSTON CITY HALL

ADDITION & REMODEL PROJECT
25 SOUTH MAIN STREET
CLARKSTON, UTAH 84305

MARK	DATE	DESCRIPTION

ISSUE:	Construction Documents
PROJECT NUMBER:	2022034
DATE:	AUGUST 17, 2022
DESIGNED BY:	ECR
DRAWN BY:	DDS

POWER PLAN - LOWER LEVEL

E300

LAST SAVE: 8/17/2022 T:\JOBS\2022\034 CLARKSTON CITY BLDG\01 DRAWINGS\05 ELECTRICAL\SINE SOURCE PROJECT\SHEETS\E300 POWER PLAN - LOWER LEVEL.DWG
LAST SAVED: 17 Aug 22

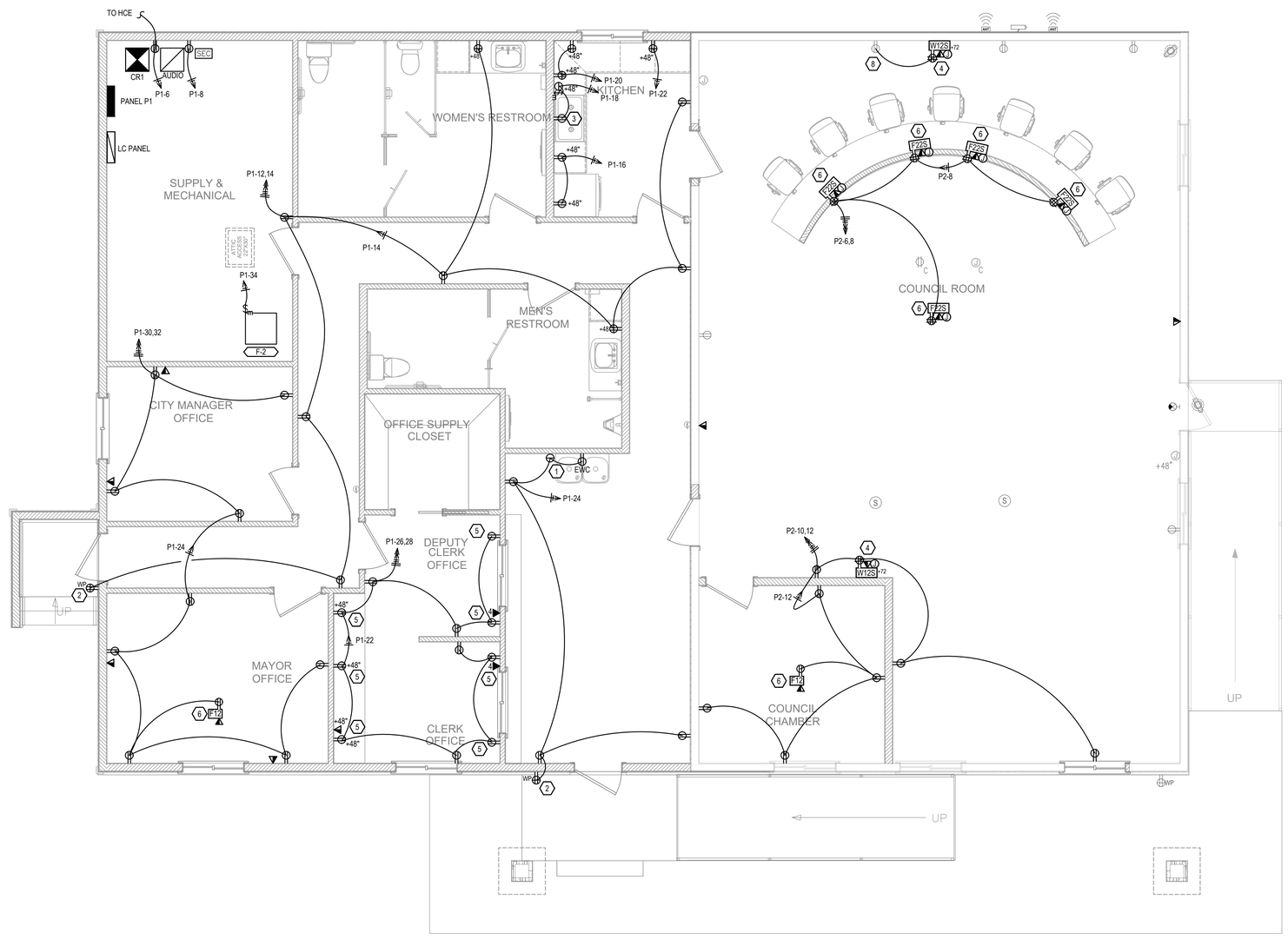

1 POWER PLAN - UPPER LEVEL
Scale: 1/4"=1'-0"

SHEET KEYED NOTES

1. MOUNT EWC OUTLET BEHIND COOLER COVER. ROUTE CIRCUIT THROUGH FACELESS GFCI (LEVITON 7590 OR EQUIVALENT) MOUNTED BELOW COOLER COVER.
2. PROVIDE WP-IN-USE, FLUSH-MOUNT BOX (ARLINGTON STEEL IN-BOX OR EQUIVALENT). COORDINATE TYPE WITH WALL CONSTRUCTION. FIELD PAINT INTERIOR AND TRIM TO MATCH BUILDING TRIM COLOR.
3. PROVIDE SWITCHED RECEPTACLE UNDER KITCHEN BASIN FOR DISPOSAL. DISPOSAL BY OTHERS. COORDINATE DISPOSAL CORD WITH PLUMBING CONTRACTOR AND PROVIDE AND/OR INSTALL CORD AS REQUIRED. ROUTE CIRCUIT THROUGH FACELESS GFCI (LEVITON 7590 OR EQUIVALENT) MOUNTED ABOVE COUNTER LEVEL WITH COUNTER-TOP OUTLETS. LABEL GFCI FOR APPLIANCE SERVED.
4. PROVIDE RECESS CONNECTIONS (WIREMOLD EFSB2 SERIES) TO FLAT PANEL TV. VERIFY OUTLET LOCATION WITH OWNER'S AV CONTRACTOR PRIOR TO ROUGH-IN. FIELD PAINT BOX/COVER/CONDUIT TO MATCH ADJACENT BUILDING SURFACE.
5. OUTLETS MOUNTED IN MILLWORK. COORDINATE WITH CABINET SUPPLIER.
6. COORDINATE EXACT FLOOR BOX LOCATION WITH FURNITURE SUPPLIER AND OWNER'S AV CONTRACTOR PRIOR TO ROUGH-IN.
7. PROVIDE POWER FOR EXTERIOR BUILDING SIGN. LOCATE J-BOX IN ACCESSIBLE LOCATION ABOVE ACCESSIBLE CEILING. MACHINE LABEL BOX "SIGN POWER". EXTEND CIRCUIT TO SIGN PER EQUIPMENT REQUIREMENTS. ROUTE CIRCUIT THROUGH LIGHTING CONTROL AS SCHEDULED.
8. INTEGRATE INTO EXISTING CIRCUIT INDICATED WITH (3)#12THHN CONDUCTORS IN 3/4" CONDUIT.

GENERAL SHEET NOTES

1. COORDINATE ALL SWITCH, OUTLET, LIGHT AND OTHER DEVICE LOCATIONS WITH ARCHITECTURAL ELEMENTS (CABINETS, WINDOWS ETC.) PRIOR TO ROUGH IN. REVIEW ARCHITECTURAL INTERIOR ELEVATIONS PRIOR TO ROUGH-IN OF EACH AREA FOR ADDITIONAL INFORMATION.
2. PROVIDE 4SD J-BOX WITH 1 GANG MUD RING AND 1" CONDUIT TO ACCESSIBLE CEILING SPACE FOR ALL VOICE/DATA/COMBO OUTLETS SHOWN ON FLOOR PLANS. PROVIDE INSULATED THROAT CONNECTORS ON BOTH ENDS OF CONDUIT. COMMUNICATIONS CABLING PROVIDED BY OWNER.

SINE SOURCE ENGINEERING
95 W Golf Course Road
Suite 102
Logan, Ut 84321
office: (435) 787-1445
fax: 1-877-207-3199
www.sinesource.net

The design represented by these drawings are, and shall remain the property of Sine Source Engineering, LLC and as such Sine Source Engineering, LLC retains total ownership and control. The design represented by these drawings is sold to the client listed in the titleblock for a one time use at the propety indicated.
Any other use or reproduction must be permitted in writing by Sine Source Engineering, LLC.

CONSULTANTS

REGISTERED PROFESSIONAL ENGINEER
No. 6813611
ERIC C. RASMUSSEN
8/17/2022
STATE OF UTAH

CLARKSTON CITY HALL

ADDITION & REMODEL PROJECT
25 SOUTH MAIN STREET
CLARKSTON, UTAH 84305

MARK	DATE	DESCRIPTION

ISSUE:	Construction Documents
PROJECT NUMBER:	2022034
DATE:	AUGUST 17, 2022
DESIGNED BY:	ECR
DRAWN BY:	DDS

POWER PLAN - UPPER LEVEL

E301

LAST SAVE 6/25/202 T:\VOBS\2022034 CLARKSTON CITY BLDG\01 DRAWING\S\05 ELECTRICAL\SINE SOURCE PROJECT\SHEETS\E301 POWER PLAN - UPPER LEVEL.DWG
LAST SAVED: 25 Jun 22

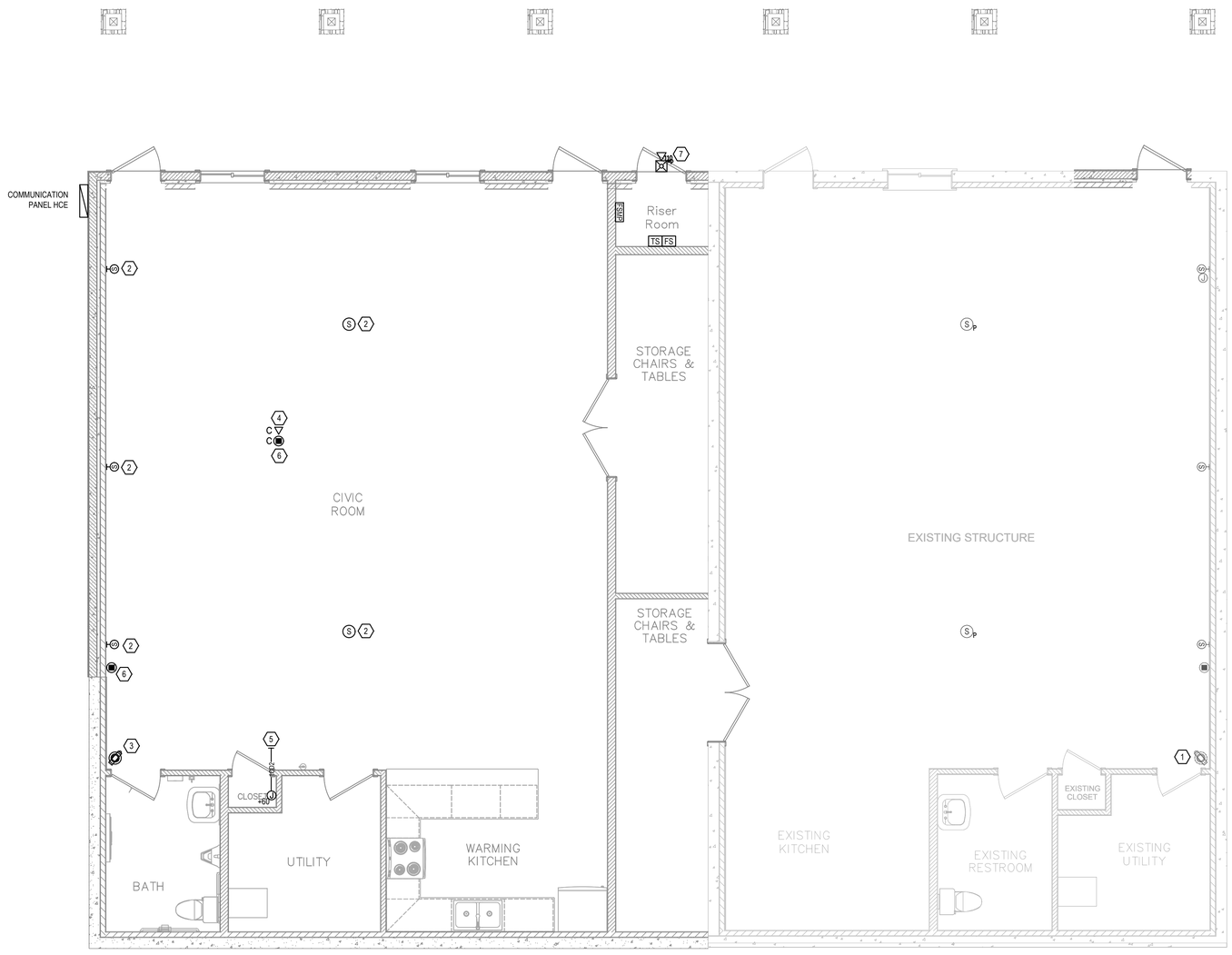

1 ELECTRONIC SYSTEMS PLAN - LOWER LEVEL
Scale: 1/4"=1'-0"

SHEET KEYED NOTES

1. PROTECT ELECTRONIC DEVICE DURING CONSTRUCTION. PROVIDE NEW CABLE AND RE-ROUTE TO RELOCATED RACK
2. INSTALL A/V CONTRACTOR SUPPLIED SPEAKER AND AUDIO WIRING FROM DEVICE TO A/V RACK. PRELIMINARY LAYOUT INDICATED. COORDINATE EXACT LOCATION WITH A/V CONTRACTOR PRIOR TO ROUGH-IN.
3. PROVIDE OUTLET BOX FOR CAMERA LOCATED PER OWNER'S SECURITY CONTRACTOR'S DIRECTION WITH CONDUIT STUBBED TO SECURITY HEAD END.
4. COMMUNICATIONS OUTLET PER OWNER. COORDINATE EXACT LOCATION WITH OWNER PRIOR TO ROUGH-IN.
5. ROUTE A/V CONDUIT WITH STRING FROM CLOSET TO AV RACK.
6. LOCATE TV BOX PER OWNER'S AV CONTRACTOR'S DIRECTION. ROUTE CABLE TO CLOSET.
7. PROVIDE EXTERIOR AUDIBLE ALARM. REFER TO FIRE ALARM SHOP DRAWINGS FOR EXACT LOCATION.

GENERAL SHEET NOTES

1. PROVIDE PULL STRING IN ALL CONDUITS.
2. STUB ALL COMMUNICATIONS CONDUITS TO NEAREST COMMUNICATIONS PATHWAY (CMJ, xBTy, xCTy) OR COMMUNICATIONS RACK IN OPEN CEILING AREAS.
3. PROVIDE "OUTLET BOX" PER COMMUNICATIONS RACEWAY SCHEDULE AT EACH DEVICE LOCATION UNLESS SPECIFICALLY INDICATED OTHERWISE IN THESE OR AVL DRAWINGS.
4. REFER TO AVL DRAWINGS FOR ADDITIONAL AVL INSTALLATIONS TO BE COMPLETED BY ELECTRICAL CONTRACTOR.
5. SEE FLOOR BOX SCHEDULE FOR FOR FLOOR BOX CONDUIT REQUIREMENTS.
6. SEE SYMBOL SCHEDULE AND COMMUNICATIONS RISER DIAGRAM FOR COMMUNICATIONS CABLING AND ROUGH-IN REQUIREMENTS.
7. PROVIDE INDUSTRY STANDARD CADDIE CLIPS 4' ON CENTER THROUGH ALL CORRIDORS AND INTO DATA ROOM. COMPLY WITH TIA/EIA CATEGORY 6E STANDARDS FOR COMMUNICATIONS RACEWAY INSTALLATIONS.
8. CANDELA RATINGS FOR STROBE DEVICES ARE MINIMUM REQUIRED VALUES. FIRE ALARM CONTRACTOR SHALL ADJUST MANUFACTURER'S STANDARD CANDELA RATINGS AS NECESSARY TO MEET OR EXCEED MINIMUM REQUIREMENTS.
9. ALL FIRE ALARM CONDUITS AND BOXES TO BE IDENTIFIED AS FOLLOWS:
   a) CONCEALED: FACTORY APPLIED RED.
   b) EXPOSED: FIELD PAINTED TO MATCH ADJACENT SURFACE.
10. POWER FOR ALL FIRE ALARM PANELS AND FIRE ALARM POWER SUPPLIES MUST BE PROVIDED BY A DEDICATED AC BRANCH CIRCUIT.
11. NEW DEVICES SHOWN ON EXISTING WALLS SHALL FINISH FLUSH WITH WALL UNLESS OTHERWISE NOTED. CUT, PATCH AND REPAIR SURFACES AS REQUIRED.

SINE SOURCE ENGINEERING
95 W Golf Course Road
Suite 102
Logan, Ut 84321
office: (435) 787-1445
fax: 1-877-207-3199
www.sinesource.net

The design represented by these drawings are, and shall remain the property of Sine Source Engineering, LLC and as such Sine Source Engineering, LLC retains total ownership and control. The design represented by these drawings is sold to the client listed in the titleblock for a one time use at the propety indicated.
Any other use or reproduction must be permitted in writing by Sine Source Engineering, LLC.

CONSULTANTS

REGISTERED PROFESSIONAL ENGINEER
No. 6813611
ERIC C. RASMUSSEN
8/17/2022
STATE OF UTAH

CLARKSTON CITY HALL
ADDITION & REMODEL PROJECT
25 SOUTH MAIN STREET
CLARKSTON, UTAH 84305

MARK	DATE	DESCRIPTION

ISSUE:	Construction Documents
PROJECT NUMBER:	2022034
DATE:	AUGUST 17, 2022
DESIGNED BY:	ECR
DRAWN BY:	DDS

ELECTRONIC SYSTEMS PLAN - LOWER LEVEL

E400

LAST SAVE 8/17/2022 T:\JOBS\2022\034 CLARKSTON CITY BLDG\01 DRAWINGS\05 ELECTRICAL\SINE SOURCE PROJECT\SHEETS\E400 ELECTRONIC SYSTEMS PLAN - LOWER LEVEL.DWG
LAST SAVED: 17 Aug 22

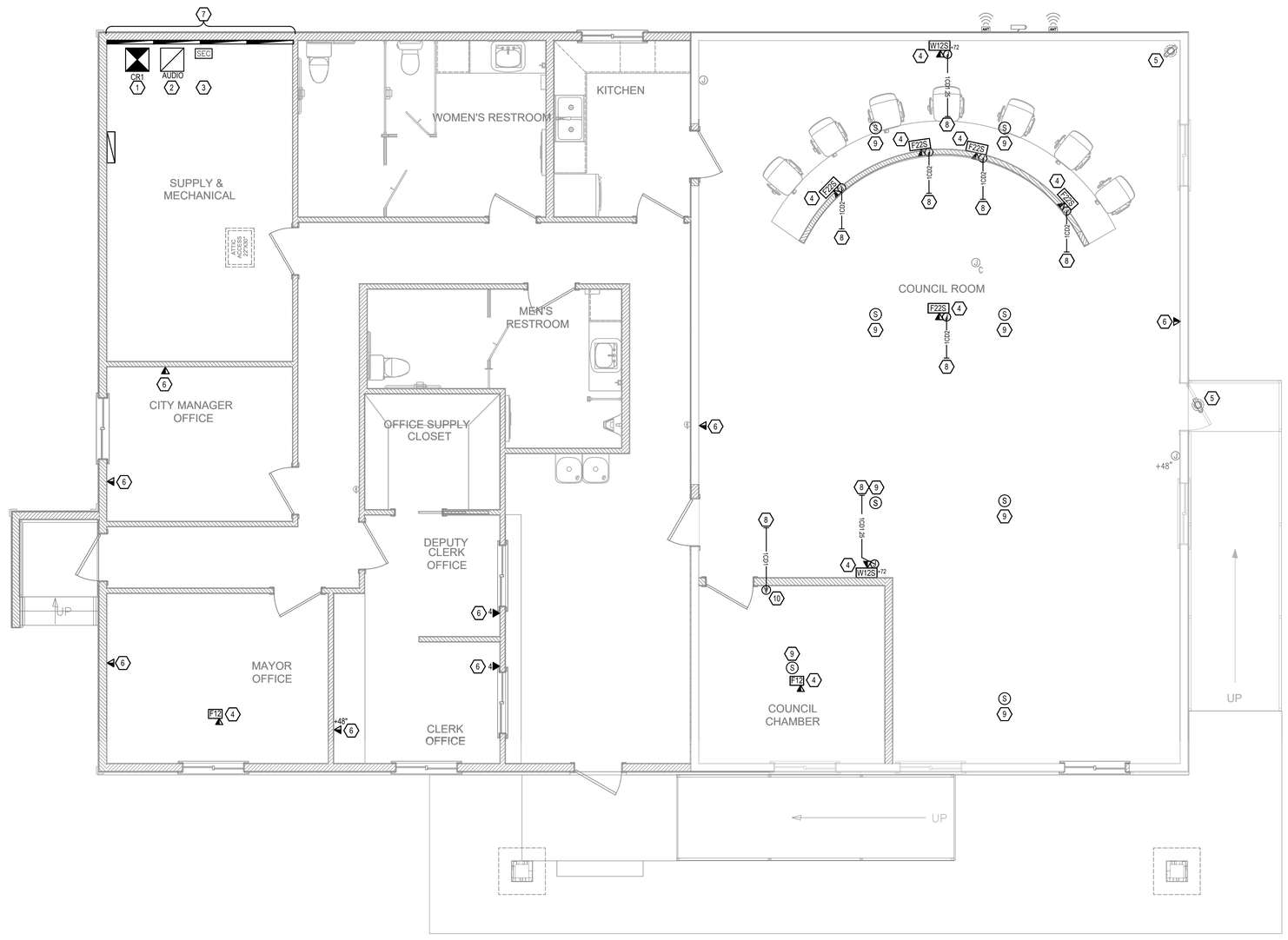

1 ELECTRONIC SYSTEMS PLAN - UPPER LEVEL
Scale: 1/4"=1'-0"

SHEET KEYED NOTES

1. RELOCATE EXISTING COMMUNICATION RACK TO NEW LOCATION. COORDINATE EXACT LOCATION WITH OWNER'S IT/AV CONTRACTOR.
2. INSTALL OWNER SUPPLIED AV RACK. COORDINATE EXACT LOCATION WITH OWNER'S IT/AV CONTRACTOR. STUB PATHWAYS INDICATED BEHIND RACK LOCATION.
3. RELOCATE EXISTING SECURITY HEAD TO NEW LOCATION. COORDINATE EXACT LOCATION WITH OWNER'S IT/AV CONTRACTOR.
4. COORDINATE EXACT FLOOR BOX/WALL BOX LOCATION WITH FURNITURE SUPPLIER AND OWNER'S AV CONTRACTOR PRIOR TO ROUGH-IN.
5. PROTECT ELECTRONIC DEVICE DURING CONSTRUCTION. PROVIDE NEW CABLE AND RE-ROUTE TO RELOCATED RACK.
6. COMMUNICATIONS OUTLET PER OWNER. COORDINATE EXACT LOCATION WITH OWNER PRIOR TO ROUGH-IN.
7. PROVIDE 4'x8' PLYWOOD SHEET(S) FIELD PAINTED TO MATCH ADJACENT WALL SURFACE.
8. ROUTE A/V CONDUIT WITH STRING FROM BOX TO AV RACK.
9. INSTALL A/V CONTRACTOR SUPPLIED SPEAKER AND AUDIO WIRING FROM DEVICE TO A/V RACK. PRELIMINARY LAYOUT INDICATED. COORDINATE EXACT LOCATION WITH A/V CONTRACTOR PRIOR TO ROUGH-IN.
10. LOCATE VOLUME CONTROL PER AV CONTRACTOR'S DESIGN.

GENERAL SHEET NOTES

1. PROVIDE PULL STRING IN ALL CONDUITS.
2. STUB ALL COMMUNICATIONS CONDUITS TO NEAREST COMMUNICATIONS PATHWAY (CMJ, xBTy, xCTy) OR COMMUNICATIONS RACK IN OPEN CEILING AREAS.
3. PROVIDE "OUTLET BOX" PER COMMUNICATIONS RACEWAY SCHEDULE AT EACH DEVICE LOCATION UNLESS SPECIFICALLY INDICATED OTHERWISE IN THESE OR AVL DRAWINGS.
4. REFER TO AV DRAWINGS PRIOR TO ROUGH-IN OF ALL AV EQUIPMENT.
5. SEE FLOOR BOX SCHEDULE FOR FOR FLOOR BOX CONDUIT REQUIREMENTS.

SINE SOURCE ENGINEERING
95 W Golf Course Road
Suite 102
Logan, Ut 84321
office: (435) 787-1445
fax: 1-877-207-3199
www.sinesource.net

The design represented by these drawings are, and shall remain the property of Sine Source Engineering, LLC and as such Sine Source Engineering, LLC retains total ownership and control. The design represented by these drawings is sold to the client listed in the titleblock for a one time use at the propety indicated.
Any other use or reproduction must be permitted in writing by Sine Source Engineering, LLC.

CONSULTANTS

REGISTERED PROFESSIONAL ENGINEER
No. 6813611
ERIC C. RASMUSSEN
8/17/2022
STATE OF UTAH

CLARKSTON CITY HALL
ADDITION & REMODEL PROJECT
25 SOUTH MAIN STREET
CLARKSTON, UTAH 84305

MARK	DATE	DESCRIPTION

ISSUE:	Construction Documents
PROJECT NUMBER:	2022034
DATE:	AUGUST 17, 2022
DESIGNED BY:	ECR
DRAWN BY:	DDS

ELECTRONIC SYSTEMS PLAN - UPPER LEVEL

E401

LAST SAVE 6/29/2022 T:\JOBS\2022\034 CLARKSTON CITY BLDG\01 DRAWINGS\05 ELECTRICAL\SINE SOURCE PROJECT\SHEETS\E401 ELECTRONIC SYSTEMS PLAN - UPPER LEVEL.DWG
LAST SAVED: 23 Jun 22

LIGHT FIXTURE SCHEDULE

TYPE	MANUFACTURER/CATALOG NO.	DESCRIPTION	MOUNTING	POWER	LAMPS
E- 1B	LITHONIA ELM2LF-SCBO-SDRT OR EQUIVALENT	LED EMERGENCY LIGHT HOUSING COLOR BY OWNER, NICKEL CADMIUM BATTERY SELF DIAGNOSTICS	WALL	2.5W	LED
EX- 1EB EX- 1EB(R)	LITHONIA LHQM-LED-SCBO-G-HO-SD (R: ELMRW-LP220L-DDBTXDT) OR EQUIVALENT	LED EXIT WITH EMERGENCY LIGHT HOUSING COLOR BY OWNER, NICKEL CADMIUM BATTERY GREEN EXIT LED LIGHT SELF DIAGNOSTICS REMOTE HEAD WHERE INDICATED BY FIXTURE APPEND "R"	WALL	4W	LED
LS- L4K	LITHONIA CPANL-2X2-AL01-SWW7-M4-PAC2DF72 OR EQUIVALENT	LED SWITCHABLE 2X2 SURFACE MOUNT PANEL SWITCHABLE LUMEN OUTPUT (2400, 3300, 4400) SET TO 3300LM SWITCHABLE CCT (3500K, 4000K, 5000K) SET TO 3500K DLC RATED FIXTURE,	CEILING	22/**31**/41 W SWITCHABLE	2400/**3300**/4400 LM NOMINAL LED **3500**/4000/5000K SWITCHABLE
LS- L6K	LITHONIA CPANL-2X4-AL06-SWW7-M2- OR EQUIVALENT	LED SWITCHABLE 2X4 SURFACE MOUNT PANEL SWITCHABLE LUMEN OUTPUT (4000, 5000, 6000) SET TO 6000LM SWITCHABLE CCT (3500K, 4000K, 5000K) SET TO 3500K DLC RATED FIXTURE,	CEILING	36/45/**55** W SWITCHABLE	4000/5000/**6000** LM NOMINAL LED **3500**/4000/5000K SWITCHABLE
LW- L6K	LITHONIA FML4W-48-AL06-SEF-835-MVOLT OR EQUIVALENT	LED 4' SURFACE WRAP; 120/277, 0-10V DIMMABLE DRIVER SWITCHABLE LUMEN OUTPUT (4000, 5000, 6000) SET TO 6000LM	SURFACE	36/45/55 W SWITCHABLE	4000/5000/**6000** LM NOMINAL LED 3500K
OW- L2K OW- L2K(B) OW- L2K(P)	LITHONIA WPX1-LED-P1-30K-MVOLT-SCBO-(B-E14WC)-(P-PE) OR EQUIVALENT	EXTERIOR LED WALLPACK SCB0=STANDARD COLOR BY OWNER INTEGRAL BATTERY PACK WHERE INDICATED BY FIXTURE APPEND "B" INTEGRAL PHOTOCELL WHERE INDICATED BY FIXTURE APPEND "P"	WALL REPLACE EXISTING FIXTURES	11 W	1500 LUMEN NOMINAL LED 3000K
OW- L5K	LITHONIA DSXW1-LED-20C-700-30K-T3M-MVOLT-HS-SCBO OR EQUIVALENT	EXTERIOR LED WALLPACK SCB0=STANDARD COLOR BY OWNER HOUSE SIDE SHIELD	WALL HEIGHT PER ARCHITECT	46 W	1500 LUMEN NOMINAL LED 3000K
RL- L06	LITHONIA 4JBK*-RD-30K-90CRI-SCBO-M6/OUJBK643U OR EQUIVALENT	RECESSED 4" LED CAN, INTEGRATED STEEL JUNCTION BOX "VERIFY CEILING DEPTH PRIOR TO ORDERING. NOTIFY ENGINEER OF DISCREPANCY SCB0=STANDARD COLOR BY OWNER PROVIDE CONSTURCTION PAN AS NEEDED	RECESS VERIFY CEILING DEPTH PRIOR TO ORDERING	8.9 W	695 LUMEN NOMINAL LED 3000K
RL- L2K	LITHONIA LDN6-AL03-SWW1-LO6-AR-LSS-MVOLT-UGZ- OR EQUIVALENT	6" LED RECESSED LIGHT; 120/277, 0-10V DIMMING TO 10% DRIVER SWITCHABLE LUMEN OUTPUT (2000, 2500, 3000) SET TO 2000LM SWITCHABLE CCT (3000K, 3500K, 4000K, 5000K) SET TO 3500K	RECESS	25W	**2000**/2500/3000 LM NOMINAL LED 3000K/**3500**/4000/5000K SWITCHABLE
RL- L3K	LITHONIA LDN6-AL03-SWW1-LO6-AR-LSS-MVOLT-UGZ- OR EQUIVALENT	6" LED RECESSED LIGHT; 120/277, 0-10V DIMMING TO 10% DRIVER SWITCHABLE LUMEN OUTPUT (2000, 2500, 3000) SET TO 3000LM SWITCHABLE CCT (3000K, 3500K, 4000K, 5000K) SET TO 3500K	RECESS	38W	2000/2500/**3000** LM NOMINAL LED 3000K/**3500**/4000/5000K SWITCHABLE
RL- L4K	INDY LRM4*-40LM-35K-MVOLT-G4-80CRI-GZ1-HM-CSS OR EQUIVALENT	4" RECESSED CAN; LED LAMPING; 120/277, 0-10V DIMMING TO 1% DRIVER HYPERBOLIC MEDIUM DISTRIBUTION; CLEAR SEMI-SPECULAR; FLANGED	RECESS	42W	4000 LUMEN NOMINAL LED 3500K
S2- L3K S2- L3K(B)	LITHONIA CLX L24-3500-SEF-FDL-MVOLT-GZ10-40K-80CRI-WH-(EM:PS1050) OR EQUIVALENT	2' LED STRIP; 0-10V DIMMING DRIVER PROVIDE EMERGENCY POWER PACK WHERE INDICATED BY FIXTURE APPEND "B"	SURFACE	25 W	3716 LUMENS NOMINAL LED 4000K
S4- L5K	LITHONIA CSS-ALO3-MVOLT-SWW3-80CRI- OR EQUIVALENT	LED 4' STRIP, MVOLT DRIVER SWITCHABLE LUMEN OUTPUT (3000, 4000, 5000) SET TO 5000LM SWITCHABLE CCT (3500K, 4000K, 5000K) SET TO 3500K	CEILING SURFACE MOUNTED	27/**36**/44 W SWITCHABLE	3000/**4000**/5000 LM NOMINAL LED **3500**/4000/5000K SWITCHABLE
WB- L5K	TERON LIGHTING VCYL48-L34.7-TE950-120/277-SCBO-35K OR EQUIVALENT	48" LED DECORATIVE WALL BRACKET; 120V, ELV DIMMABLE DRIVER SCBA=STANDARD COLOR BY ARCHITECT	WALL CENTERED ABOVE VANITY MIRROR	34.7 W	4722 LUMEN NOMINAL LED 3500K

LIGHT FIXTURE ACCESSORY SCHEDULE

B	AS SPECIFIED	APPENDED TO FIXTURE TYPE; 1100 LUMEN EM BATTERY SUPPLY	AS SPECIFIED		PER FIXTURE TYPE

NOTES

-FIXTURE APPENDS ARE ADDED TO STANDARD FIXTURE TYPES. APPENDS ARE INTENDED TO MODIFY FIXTURE CATALOG NUMBERS GIVEN ABOVE AS NOTED IN APPEND DESCRIPTION

GENERAL DIAGRAM NOTES

1. ALL INSTALLATIONS TO COMPLY WITH TIA/EIA STANDARD 586B FOR CAT 6 CABLE.
2. ALL STATION OUTLETS AND ASSOCIATED CABLING AND DATA RACKS, RACEWAYS, PUNCH BLOCKS, PATCH PANELS AND CROSS CONNECTS PROVIDED BY CONTRACTOR. ELECTRONICS BY OWNERS.
3. PROVIDE OWNER STANDARD OUTLET PLATES AT EACH OUTLET WITH PROVISIONS FOR FOUR JACKS IN EACH OUTLET. FILL UNUSED SPACES WITH BLANK INSERT.
4. FOLLOW OWNER'S IDENTIFICATION STANDARDS FOR ALL NEW INSTALLATIONS. COORDINATE WITH OWNER'S VOICE AND DATA PERSONNEL.
5. PROVIDE ONE PATCH CORD FOR EACH NEW CABLE/PORT INSTALLED. FIELD VERIFY LENGTHS, BUT ASSUME EQUAL QUANTITIES OF 2', 4', AND 10' CABLES FOR BID.
6. CONTRACTOR SHALL TEST ALL COPPER RUNS TO VERIFY dB LOSSES AND SHALL PROVIDE TEST RESULTS TO OWNER AND ENGINEER.
7. PROVIDE WIDE-SWEEP BENDS FOR ALL CONDUITS.
8. PROVIDE CONNECTORS WITH INSULATED THROATS OR PLASTIC BUSHINGS ON ALL CONDUIT ENDS.
9. ALL CABLING SHALL BE PLENUM RATED.

DIAGRAM KEYED NOTES

1. COORDINATE NEW UTILITY TV/TELEPHONE CONNECTION WITH LOCAL UTILITY REP.
2. PROVIDE NEMA 3R HINGED COVER, LOCKABLE ENCLOSURE WITH PLYWOOD BACKBOARD FOR UTILITY DEMARCATION. SIZED PER EQUIPMENT AND UTILITY REQUIREMENTS.
3. PROVIDE PRE-DRILLED, CU GROUNDING BAR WITH STANDOFFS MOUNTED AT 12" AFF IN COMMUNICATIONS ENCLOSURE. PROVIDE #6 CU GROUND TO GROUNDING ELECTRODE SYSTEM. PROVIDE #6 BONDING CONDUCTORS TO ALL EQUIPMENT RACKS, CABLE-TRAYS, RACEWAYS, AND OTHER ASSOCIATED COMMUNICATIONS AND AUXILIARY SYSTEMS EQUIPMENT AS NECESSARY.
4. PROVIDE RG-6 CONNECTION TO UTILITY DEMARC. PROVIDE SPLITTER TO DISTRIBUTE TO TENANTS.
5. PROVIDE CONNECTIONS TO UTILITY DEMARC. PROVIDE PUNCH BLOCK FOR DISTRIBUTION TO TENANTS.
6. RELOCATE EXISTING COMMUNICATION RACK TO NEW LOCATION. COORDINATE EXACT LOCATION WITH OWNER'S AV CONTRACTOR. RE-PLACE AND REROUTE CABLES TO NEW LOCATION.
7. PROVIDE ELECTRICALLY BONDED RACEWAY SYSTEM - BOND COMM DEVICE CONDUITS TO COMM RACK, GROUND BUS, ETC. WHERE OUTLETS STUB TO ACCESSIBLE CEILING, BOND DEVICE BOX/CONDUIT TO ADJACENT ELECTRICAL OUTLET.
8. PROVIDE (3)DATA JACKS WITH (1)CAT 6 CABLE PER JACK FROM DATA RACK TO EACH COMPLETELY FILLED TRIANGLE OUTLET SHOWN ON FLOOR PLANS. WHERE OUTLETS HAVE A NUMERICAL SUPERSCRIPT, PROVIDE "X" QUANTITY OF JACKS AND CABLES WHERE "X" IS THE ASSOCIATED SUPERSCRIPT NUMBER.
9. PROVIDE (2)DATA JACKS WITH (1)CAT 6 CABLE PER JACK FROM DATA RACK TO EACH HALF-FILLED TRIANGLE OUTLET SHOWN ON FLOOR PLANS.
10. PROVIDE (1)DATA JACK WITH (1)CAT 6 CABLE FROM DATA RACK TO EACH EMPTY TRIANGLE OUTLET SHOWN ON FLOOR PLANS.
11. PROVIDE (2)F-CONNECTORS WITH (2)RG-6 COAX CABLES FROM TV DISTRIBUTION TO EACH TV OUTLET SHOWN ON PLAN. TV OUTLETS SHOWN ADJACENT TO COMMUNICATIONS OUTLETS MAY BE COMBINED INTO THE SAME OUTLET BOX .
12. PROVIDE OUTLET FOR EACH OUTLET. SEE POWER SYSTEMS SHEETS, FOR LOCATIONS AND COUNTS. TV OUTLETS SHOWN ADJACENT TO COMM OUTLETS ON FLOOR PLAN MAY BE COMBINED INTO THE SAME BOX/RACEWAY/FACEPLATE.
13. PROVIDE 6-PORT, MODULAR FACEPLATE FOR EACH COMMUNICATIONS OR TV OUTLET SHOWN. PROVIDE ONE, CAT 6, RJ-45 JACK FOR EACH VOICE OR DATA CABLE TERMINATED IN OUTLET OR ONE F-CONNECTOR FOR EACH COAX CABLE. PROVIDE BLANK INSERTS FOR UNUSED PLATE OPENINGS.
14. PROVIDE CONDUIT FROM DEVICE TO ENCLOSURE. PROVIDE INSULATED THROAT CONNECTORS AND WIDE SWEEP BENDS FOR ALL CONDUIT RUNS.
15. PROVIDE J-HOOKS/D-RINGS 4' ON CENTER FOR OPEN COMMUNICATION PATHWAYS ABOVE ACCESSIBLE ATTIC SPACES.

COMMUNICATIONS RACEWAY SCHEDULE

SYMBOL	DESCRIPTION	MANUFACTURER	MODEL	ACCESSORIES
xCDy	CONDUIT; QUANTITY "X", DIAMETER "Y" AS INDICATED ON SYMBOL SCHEDULE	AS SPECIFIED		INSULATED THROAT CONNECTORS ON ALL ENDS; PULL STRING
OUTLET BOX	5" SQUARE X 2 7/8" DEEP 3/4" MUD RING (1 OR 2-GANG AS NOTED)	STEEL CITY STEEL CITY	82181T-1 SERIES 82C-*G-3/4 (OR EQUIVALENT)	

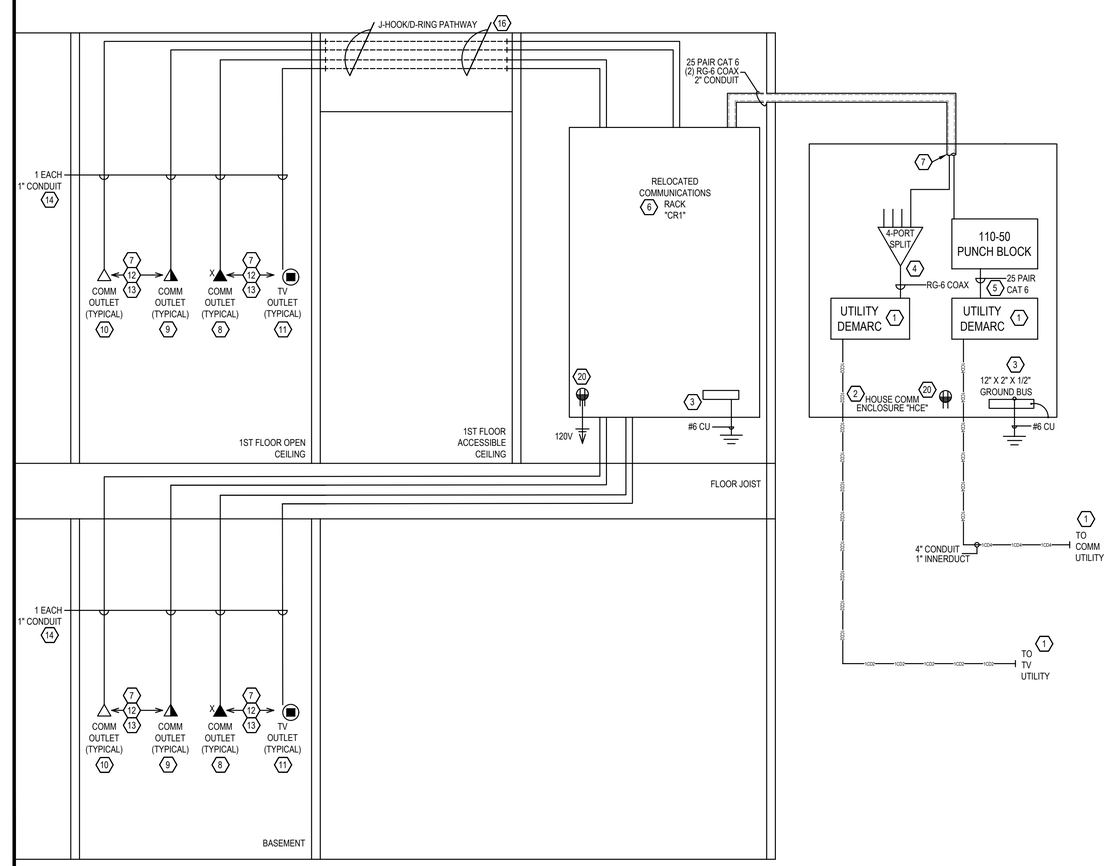

SINE SOURCE ENGINEERING
95 W Golf Course Road
Suite 102
Logan, Ut 84321
office: (435) 787-1445
fax: 1-877-207-3199
www.sinesource.net

The design represented by these drawings are, and shall remain the property of Sine Source Engineering, LLC and as such Sine Source Engineering, LLC retains total ownership and control. The design represented by these drawings is sold to the client listed in the titleblock for a one time use at the propety indicated.
Any other use or reproduction must be permitted in writing by Sine Source Engineering, LLC.

CONSULTANTS

REGISTERED PROFESSIONAL ENGINEER
No. 6813611
ERIC C. RASMUSSEN
8/17/2022
STATE OF UTAH

CLARKSTON CITY HALL

ADDITION & REMODEL PROJECT
25 SOUTH MAIN STREET
CLARKSTON, UTAH 84305

MARK	DATE	DESCRIPTION

ISSUE:	Construction Documents
PROJECT NUMBER:	2022034
DATE:	AUGUST 17, 2022
DESIGNED BY:	ECR
DRAWN BY:	DDS

ELECTRICAL DETAILS

E501

LAST SAVE 8/17/2022 T:\JOBS\2022\034 CLARKSTON CITY BLDG\01 DRAWINGS\05 ELECTRICAL\SINE SOURCE PROJECT\SHEETS\E501 ELECTRICAL DETAILS.DWG
LAST SAVED: 17 Aug 22

GENERAL SHEET NOTES

1. PROTECT EXISTING BUILDING SERVICE AND PANELS AS NEEDED DURING CONSTRUCTION TO KEEP BUILDING OPERATIONAL UNTIL SWITCHOVER.
2. COMPLY WITH POWER UTILITY'S REQUIREMENTS FOR ALL UTILITY RELATED INSTALLATIONS. REVIEW CURRENT UTILITY STANDARDS MANUAL PRIOR TO BID. NOTIFY ENGINEER OF CONFLICTS PRIOR TO BID.
3. AIC RATINGS SHOWN INDICATE MINIMUM REQUIRED VALUES. USE MANUFACTURER'S NEXT STANDARD RATING WHICH MEETS OR EXCEEDS VALUE SHOWN.
4. ALL CONDUCTORS ARE CONSIDERED TO BE COPPER UNLESS SPECIFICALLY NOTED OTHERWISE.
5. A FULL SIZE EQUIPMENT GROUNDING CONDUCTOR SIZED FOR THE OVERCURRENT PROTECTIVE DEVICE PROTECTING THE CIRCUIT IS REQUIRED IN EACH RACEWAY OR CABLE FOR PARALLELED CIRCUITS.
6. FIELD MARK SERVICE EQUIPMENT WITH AVAILABLE FAULT CURRENT AND CALCULATION DATE PER NEC 110.24(A).
7. ALL SERVICE ENTRANCE EQUIPMENT (PANELBOARDS, SWITCHBOARDS, ETC.) SHALL BE UL LISTED OR USE AS SERVICE ENTRANCE EQUIPMENT.
8. BOND BUILDING STRUCTURAL STEEL, METALLIC WATER PIPES, AND CONCRETE-ENCASED ELECTRODES (REBAR) TO EACH OTHER AND TO THE ENCLOSURE GROUNDING BUS INSIDE THE ENCLOSURE CONTAINING THE SERVICE DISCONNECT SWITCH. THE CONCRETE INSTALLATION CONTRACTOR SHALL BE INSTRUCTED TO LEAVE AT LEAST 1 FT. OF REBAR EXPOSED AT THE SERVICE ENTRANCE PANEL FOR BONDING.
9. ALL BONDING SHALL BE EFFECTED BY MEANS OF UL LISTED DEVICES SPECIFICALLY TESTED AND APPROVED FOR THE PURPOSE.

SHEET KEYED NOTES

1. PROTECT EXISTING SERVICE UNTIL BUILDING SWITCHOVER IS COMPLETE. AFTER SERVICE SWITCHOVER: DEMO EXISTING ELECTRICAL SERVICE AND COORDINATE REMOVAL OF SERVICE LATERAL CONDUCTORS.
2. EXISTING PANEL TO REMAIN. RE-FEED PANEL FROM NEW SERVICE. RE-LABEL PANEL AS P2.
3. SECONDARY CONDUIT, TRENCHING, AND BACKFILL BY CONTRACTOR. CONDUCTORS BY UTILITY.
4. RISER ON THE POLE FURNISHED BY CONTRACTOR PER UTILITY REQUIREMENTS.
5. PROVIDE WATER & GROUND ROD GROUNDING ELECTRODE CONNECTIONS WHEN METALLIC WATERLINE ENTERS BUILDING, OTHERWISE OMIT.
6. SEE PANEL SCHEDULE FOR ADDITIONAL BREAKERS.

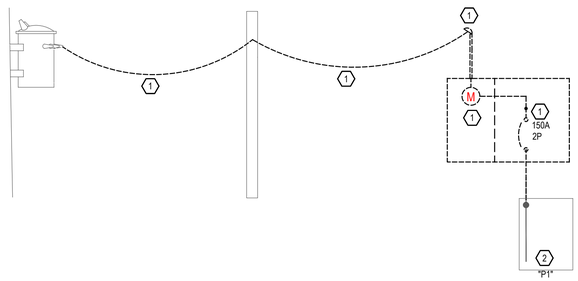

1 ELECTRICAL ONE-LINE DIAGRAM:DEMO

Scale: N.T.S

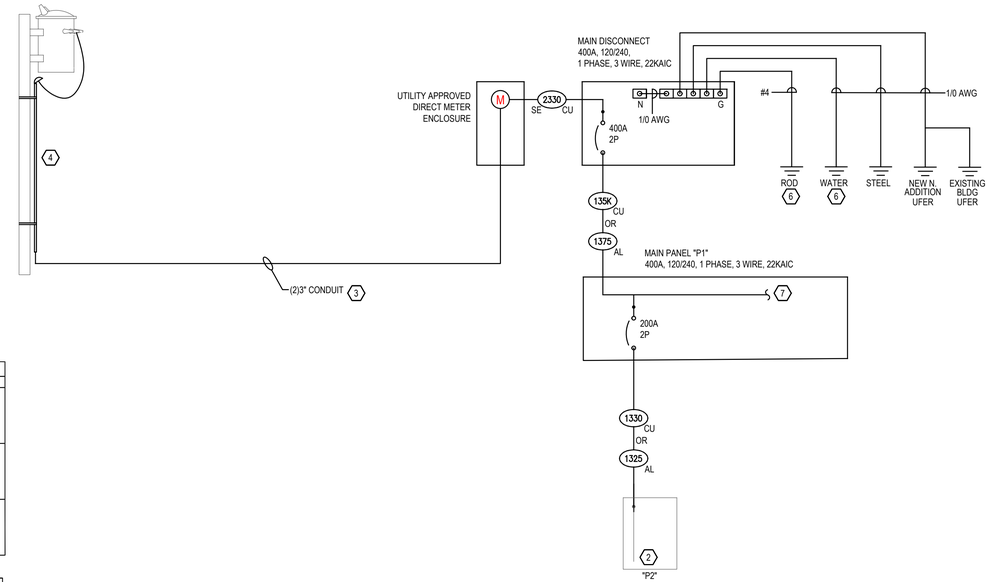

2 ELECTRICAL ONE-LINE DIAGRAM:NEW

Scale: N.T.S

FLOOR, TABLE, AND WALL BOX SCHEDULE

SYMBOL	DESCRIPTION	MANUFACTURER	MODEL	COLOR	DEVICES
F22S	MULTI-SERVICE, X-LARGE CAPACITY FLOOR BOX; STEEL; FLUSH-IN-USE; CUTOUT COVER; COLOR PER OWNER/ARCHITECT	WIREMOLD EVOLUTION OR EQUIVALENT WITH PRIOR APPROVAL	EFB8S/EFB610BTXX	PER ARCHITECT	-TWO DUPLEX -1 @ 1.25" COMM CONDUIT -A/V PLATES/CONNECTORS PER OWNER -A/V CONDUIT AS NOTED ON DRAWINGS
F12	3-SERVICE POKE-THROUGH FLOOR BOX; STEEL; FLUSH-IN-USE; SOLID COVER; COLOR PER OWNER; 2 HOUR FIRE RATED	WIREMOLD EVOLUTION OR EQUIVALENT WITH PRIOR APPROVAL	6AT2***	PER ARCHITECT	-ONE USB DUPLEX -1 @ 1.25" COMM CONDUIT WITH COMM/TV PORTS PER OWNER
W12S	MULTI-SERVICE, WALL BOX; STEEL; FLUSH-IN-USE; RECESS MOUNT IN WALL; COVER FIELD PAINTED TO MATCH COLOR AS SELECTED BY OWNER/ARCHITECT	WIREMOLD EVOLUTION OR EQUIVALENT WITH PRIOR APPROVAL	EFSB2	PER ARCHITECT	-1 DUPLEX -1 @ 1.25" COMM CONDUIT WITH COMM/TV PORTS PER OWNER -A/V CONNECTORS AND CABLES PER OWNER INSTALLED BY CONTRACTOR

MECHANICAL EQUIPMENT SCHEDULE

SYM	DESCRIPTION	LOAD	VOLTS	PHASE	CONTROL CIRCUITS BY	* STARTER BY	SAFETY DISCONNECT BY	REMARKS
CU- 1	CONDENSING UNIT	25.7 MCA	208	1	MECH	MECH	ELEC	REFER TO DETAIL A/E300
CU- 2	CONDENSING UNIT	25.7 MCA	208	1	MECH	MECH	ELEC	REFER TO DETAIL A/E300
DCP- 1	DOMESTIC WATER CIRCULATE PUMP	1/4 HP	120	1	MECH	EQUIP	ELEC	PROVIDE CORD AND PLUG TO MATCH MANUFACTURER'S REQUIREMENTS
EF- 1	EXHUAST FAN	113 W	120	1	ELEC	EQUIP	ELEC	INTEGRATE FAN TO OPERATE WITH ROOM LIGHTING CONTROL
EF- 2	EXHUAST FAN	84 W	120	1	ELEC	EQUIP	ELEC	INTEGRATE FAN TO OPERATE WITH ROOM LIGHTING CONTROL
EF- 3	EXHUAST FAN	84 W	120	1	ELEC	EQUIP	ELEC	INTEGRATE FAN TO OPERATE WITH ROOM LIGHTING CONTROL
EF- 4	EXHUAST FAN	84 W	120	1	ELEC	EQUIP	ELEC	PROVIDE WALL SWITCH. ROUTE ROOM LIGHTING CONTROL SWITCH LEG THROUGH FAN SWITCH.
F- 1	FURNACE	1/2 HP	120	1	MECH	MECH	ELEC	
F- 2	FURNACE	1/2 HP	120	1	MECH	MECH	ELEC	
EWH- 1	ELECTRIC DOMESTIC HOT WATER HEATER	(2)3.8KW	240	1	MECH	N/A	ELEC	PROVIDE CORD AND PLUG TO MATCH MANUFACTURER'S REQUIREMENTS

PANEL P2 | TYPE NQOB | 1 Ø 3 WIRE 120/240 VOLTS | LOCATION | MOUNTING

[ ] NEW
[X] EXISTING
[1] NEMA RATING
[ ] BOLT ON BREAKERS
[ ] ISOLATED GROUND BUS
[ ] SURGE PROTECT (SPD)

REMARKS *VERIFY EXISTING CIRCUIT IS ABANDONED. REPLACE WITH NEW BREAKER

[ ] FLUSH
[ ] SURFACE
[ ] AMP MAIN LUGS
[ ] BREAKER

No.	BRKR A	BRKR P	CIRCUIT DESCRIPTION	L	O	M	WIRE/CND P	N	G	C	CIRC. LOAD	A	B	CIRC. LOAD	WIRE/CND P	N	G	C	L	O	M	CIRCUIT DESCRIPTION	BRKR A	BRKR P	No.
1	15	1	EX: WEST FURNACE (DOWN)									0										EX: PLUGS W. KITCHEN (UP)	20	1	2
3	40	2	EX: RANGE										0									EX: EAST FURNACE (UPSTAIRS)	15	1	4
5	-	-	-									1080		1080	12S	12S	12S	3/4S			6	COUNCIL DESK	20*	1	6
7	20	1	EX: S.W. KITCHEN										720	720	12S	12S	12S	3/4S			4	COUNCIL DESK	20*	1	8
9	20	2	EX: ISLE S.W. KITCHEN									900		900	12S	12S	12S	3/4S			5	PLUGS: COUNCIL ROOM WALL	20*	1	10
11	-	-	-										900	900	12S	12S	12S	3/4S			5	PLUGS: COUNCIL CHAMBER	20*	1	12
13	30	2	EX: EAST AC UNIT (UPSTAIRS)									0										EX: WATER HEATER	30	2	14
15	-	-	-										0									-	-	-	16
17	30	2	EX: SPARE AC UNIT (DOWN)									1470		1470	12S	12S	12S	3/4S	35			LTG: COUNCIL ROOM/CHAMBERS	20*	1	18
19	-	-	-										0									EX: LIGHTS (UPSTAIRS	15	1	20
21A	20	1	EX: BASEMENT LIGHTS									0										EX: BATHROOM LIGHTS (UP)	15	1	22A
21B	20	1	EX: AUDIO RM BASEMENT																			SPARE	20	1	22B
23A	20	1	EX: PLUGS W. KITCHEN (DOWN)										0									EX: AUDIO RM (UPSTAIRS)	20	1	24A
23B	20	1	EX: PLUGS N.W. KITCH (DOWN)																			EX: S. WALL (UPSTAIRS)	20	1	24B
												0										EX: BATHROOM PLUG (UP)	20	1	26A
25	20	1	EX: BASEMENT LIGHTS (DOWN)									0										EX: N. WALL (UPSTAIRS)	20	1	26B
27A	20	1	EX: NORTH WALL										0									EX: N. WALL KIT (UPSTAIRS)	20	1	28A
27B	20	1	SPARE																			EX: MICROWAVE (UPSTAIRS)	20	1	28B
												0										EX: E. WALL (UPSTAIRS)	20	1	30A
29	20	1	EX: MICROWAVE (DOWNSTAIRS)									0										EX: S. WALL (DOWNSTAIRS)	20	1	30B
											TOTALS	3450	1620											
											EXISTING UTILITY PEAK	4500	4500											

FEEDER SEE ONE-LINE | AMPS/PHASE 66 51 | AIC EXISTING | SCCR EXISTING | PARALLEL RUNS SEE ONE-LINE

BREAKER CODES
A=ARC-FAULT; G=GROUND FAULT; H=HACR; L=LOCKING HANDLE; S=SHUNT TRIP; R=RED PAINTED HANDLE
WIRE CODES
I=ADD'L ISO GROUND TO MATCH SAFETY GROUND; S=UNLESS OTHERWISE SPECIFIED
GENERAL CODES
1LIN=SEE ONE-LINE DIAGRAM

PANEL P1 | TYPE NQOB | 1 Ø 3 WIRE 120/240 VOLTS | LOCATION | MOUNTING

[X] NEW
[ ] EXISTING
[1] NEMA RATING
[ ] BOLT ON BREAKERS
[ ] ISOLATED GROUND BUS
[ ] SURGE PROTECT (SPD)

REMARKS *PROVIDE SUB FEED BREAKER

[ ] FLUSH
[X] SURFACE
[400] AMP MAIN
[400] LUGS
[ ] BREAKER

No.	BRKR A	BRKR P	CIRCUIT DESCRIPTION	L	O	M	WIRE/CND P	N	G	C	CIRC. LOAD	A	B	CIRC. LOAD	WIRE/CND P	N	G	C	L	O	M	CIRCUIT DESCRIPTION	BRKR A	BRKR P	No.
1	20	1	LTG: EXTERIOR				12S	12S	12S	3/4S	254	1012										LTG: RESTROOM/KITCHEN	20	1	2
3	20	1	LTG: BASEMENT	24		1	12S	12S	12S	3/4S	1345		2570	1225	12S	12S	12S	3/4S	29		3	LTG: OFFICES/HALL	20	1	4
5	20	1	BASEMENT AV EQUIPMENT		2		12S	12S	12S	3/4S	720	1680		960	12S	12S	12S	3/4S		1		COMM RACK	20	1	6
7	20	1	PLUGS: CIVIC ROOM		3		12S	12S	12S	3/4S	540		1500	960	12S	12S	12S	3/4S		1		AUDIO RACK	20	1	8
9	20	1	PLUGS: CIVIC ROOM		5		12S	12S	12S	3/4S	900	1860		960	12S	12S	12S	3/4S		1		FIRE SPRINKLER MONITORING	20	1	10
11	20	1	PLUGS: CIVIC ROOM		7		12S	12S	12S	3/4S	1260		1980	720	12S	12S	12S	3/4S		4		PLUGS: HALL	20	1	12
13	20	1	PLUGS: KITCHEN		3		12S	12S	12S	3/4S	1080	1980		900	12S	12S	12S	3/4S		5		PLUGS: HALL	20	1	14
15	20	1	MICROWAVE		1		12S	12S	12S	3/4S	1200		1920	720	12S	12S	12S	3/4S		2		PLUGS: KITCHEN	20	1	16
17	20	1	PLUGS KITCHEN		2		12S	12S	12S	3/4S	720	1800		1080	12S	12S	12S	3/4S		1		PLUGS: DISPOSAL	20	1	18
19	20	1	PLUGS DISPOSAL		1	1	12S	12S	12S	3/4S	1080		1800	720	12S	12S	12S	3/4S		2		PLUGS: KITCHEN	20	1	20
21	20	1	PLUGS KITCHEN		2		12S	12S	12S	3/4S	720	1080		360	12S	12S	12S	3/4S		1		PLUGS: KITCHEN	20	1	22
23	50	2	OVEN		1		6	6	10	1.25	4200		4200		12S	12S	12S	3/4S				PLUGS: ENTRY	20	1	24
25	-	-	-		1		6				4200	5100		900	12S	12S	12S	3/4S		5		PLUGS: CLERK OFFICE	20	1	26
27	20	1	PLUGS EXTERIOR		4		12S	12S	12S	3/4S	720		1800	1080	12S	12S	12S	3/4S		6		PLUGS: CLERK OFFICE	20	1	28
29	20	1	FURNACE F-1			1	12S	12S	12S	3/4S	1200	2280		1080	12S	12S	12S	3/4S		6		PLUGS: MAYOR OFFICE	20	1	30
31	20	1	CIRC PUMP DCP-1			1	12S	12S	12S	3/4S	720		1620	900	12S	12S	12S	3/4S		5		PLUGS: CITY MANAGER	20	1	32
33	30	2	CONDENSING UNIT CU-1				10	10	10	3/4	2496	3696		1200	12S	12S	12S	3/4S				FURNACE F-2	20	1	34
35	-	-	-				10				2496		4992	2496	10	10	10	3/4				CONDENSING UNIT CU-2	30	2	36
37	40	2	ELECTRIC WATER HTR EWH-1				8	8	10	1	3600	6096		2496	10							-	-	-	38
39	-	-	-				8				3600		3600									SPARE	100	2	40
41	20	1	SPARE									0										-	-	-	42
43	200*	2	PANEL P2				3/0	3/0	6	2.5	7950		7950												44
45	-	-	-				3/0				6120	6120													46
											TOTALS	32704	33932												

FEEDER SEE ONE-LINE | AMPS/PHASE 273 283 | AIC 22000 | SCCR 22000 | PARALLEL RUNS SEE ONE-LINE

BREAKER CODES
A=ARC-FAULT; G=GROUND FAULT; H=HACR; L=LOCKING HANDLE; S=SHUNT TRIP; R=RED PAINTED HANDLE
WIRE CODES
I=ADD'L ISO GROUND TO MATCH SAFETY GROUND; S=UNLESS OTHERWISE SPECIFIED
GENERAL CODES
1LIN=SEE ONE-LINE DIAGRAM

CONDUCTOR AND CONDUIT SCHEDULE

SIZE OF CONDUCTORS
QUANTITY OF PHASE/NEUTRAL CONDUCTORS
QUANTITY OF PARALLEL RUNS
SCHEDULE NUMBER
CONDUCTOR MATERIAL
SUBSCRIPTS (SEE NOTE 5)

SYM	AMP CU	AMP AL	CONDUIT QTY	CONDUIT SIZE	CONDUCTOR (NOTE 1,6,7) QTY	SIZE	G P/N	G CU	G AL	IG CU	IG AL	SE (NOTE 4) CU	SE (NOTE 4) AL	NOTES
1 2 12	20	N/A	1	3/4"	2	12	12	N/A	12	N/A	8	N/A		2
1 3 12					3									2,3
1 4 12					4									2,3
1 2 0	30				2	10	10		10					2
1 3 0					3									2
1 4 0					4									2
1 2 8	40			1"	2	8			8					2
1 3 8					3									2
1 4 8					4									2
1 2 6	55				2	6			6					2
1 3 6					3									2
1 4 6				1.25"	4									2
1 2 4	70	55			2	4	8	6	4	4				2
1 3 4					3									2
1 4 4					4									2
1 2 3	85	65			2	3			3	3				2
1 3 3					3									2
1 4 3					4									2
1 3 2	95	75			3	2			2	2		6		2
1 4 2				1.5"	4									2
1 3 1	130	100			3	1	6				6			2
1 4 1					4									2,8
1 3 10	150	120		2"	3	1/0		4		1				2
1 4 10					4						4	4		2
1 3 20	175	135			3	2/0					4	4		2
1 4 20					4									2
1 3 30	200	155			3	3/0								2
1 4 30				2.5"	4									2
1 3 40	230	180			3	4/0	4		1		2	2		2
1 4 40					4									2
1 3 25	255	205			3	250		2		2/0				2
1 4 25				3"	4									2,8
1 3 3K	285	230			3	300						1/0		2,8
1 4 3K					4									2
1 3 35	310	250			3	350	3		1/0					2
1 4 35					4									2,8
1 3 4K	335	270		3.5"	3	400					1/0			2
1 4 4K					4									2
1 3 5K	380	310		4"	3	500		1		3/0				2,4
1 4 5K					4									2,4
1 3 7 5	475	385			3	750	2		2/0		2/0	3/0		2,4
1 4 7 5					4									2,4
2 3 3 0	400	310	2	2"	3	3/0	3	1	1/0	3/0	2	1/0		2,4
2 4 3 0				2.5"	4									2,4
2 3 4 0	460	360			3	4/0	2		2/0		1/0			2,4
2 4 4 0					4									2,4
2 3 2 5	510	410			3	250	1	1/0	3/0	4/0				2,4
2 4 2 5				3"	4									2,4,8
2 3 3K	570	460			3	300						3/0		2,4,8
2 4 3K					4									2,4
2 3 3 5	620	500	2	3"	3	350	1/0	1/0	4/0	4/0	2/0	3/0		2,4
2 4 3 5					4									2,4,8
2 3 4K	670	540		3.5"	3	400		2/0						2,4
2 4 4K					4									2,4
2 3 5K	760	620		4"	3	500		3/0		300		4/0		2,4
2 4 5K					4									2,4
2 3 7 5	950	770			3	750					4/0			2,4
2 4 7 5					4									2,4

CONDUIT AND CONDUCTOR SCHEDULE NOTES

1. CONDUCTORS SHOWN ARE SHOWN FOR EACH CONDUIT WITH MODIFICATIONS AS NOTED IN NOTE #5. ALL CONDUCTORS SHOWN ARE THWN FOR CU OR THWN OR XHHW FOR AL UNLESS OTHERWISE NOTED.
2. PROVIDE EQUIPMENT GROUNDING CONDUCTORS PER NEC TABLE 250-122 WHEN CIRCUIT BREAKERS ARE SIZED GREATER THAN AMPERE RATING SHOWN IN TABLE.
3. PROVIDE #10 NEUTRALS FOR MULTIWIRE BRANCH CIRCUITS SERVING COMPUTERS.
4. GROUND (G) CONDUCTOR MAY BE DELETED ON SERVICE ENTRANCE CONDUCTORS.
5. SYMBOL SUBSCRIPTS:
   - "IG": INCLUDE IG (INSULATED/ISOLATED GROUND CONDUCTOR) SCHEDULED ALONG WITH THE GROUND OF EQUIPMENT GROUND CONDUCTOR.
   - "SE": SUBSTITUTE "SE" CONDUCTOR FOR "G" CONDUCTOR SHOWN, WHICH IS SIZED FOR THE GROUNDING OF THE SECONDARY OF THE SEPARATELY DERIVED SYSTEM.
   - "2N": INCLUDE TWO NEUTRAL CONDUCTORS, SIZED AS SCHEDULED FOR PHASED AND NEUTRAL CONDUCTORS.
   - "R": RACEWAY ONLY. CONDUCTORS PROVIDED BY UTILITY.
   - "V(#)": PHASE AND NEUTRAL CONDUCTORS UPSIZED FOR VOLTAGE DROP. UPSIZE GROUNDING CONDUCTOR(G) TO SIZE INDICATED BY (#) PER NEC 250.122(B).
   - "A": ALUMINUM CONDUCTORS ALLOWED FOR FEEDER INDICATED. ALUMINUM CONDUCTORS ARE NOT TO BE USED FOR CONNECTIONS TO MOTORS OR MOTOR DRIVEN EQUIPMENT.
6. A FULL SIZE GROUNDING CONDUCTOR (SE OR G AND/OR IG) SHALL BE INSTALLED IN EACH RACEWAY OR CABLE FOR PARALLELED CIRCUITS.
7. GROUNDING CONDUCTORS (G, IG, AND SE) SHALL BE OF THE SAME CONDUCTOR MATERIAL AS THE CORRESPONDING PHASE CONDUCTORS TO KEEP TABLE CALCULATIONS IN 7 . ACCORDANCE WITH NEC REQUIREMENTS.
8. INCREASE CONDUIT TO NEXT LARGEST STANDARD CONDUIT SIZE WHEN IG IS USED.

* -CONDUIT SIZED FOR COMPACT ALUMINUM CONDUCTORS. USE COPPER CONDUIT SIZE FOR STANDARD SIZE CONDUCTORS

SINE SOURCE ENGINEERING
95 W Golf Course Road
Suite 102
Logan, Ut 84321
office: (435) 787-1445
fax: 1-877-207-3199
www.sinesource.net

The design represented by these drawings are, and shall remain the property of Sine Source Engineering, LLC and as such Sine Source Engineering, LLC retains total ownership and control. The design represented by these drawings is sold to the client listed in the titleblock for a one time use at the propety indicated.
Any other use or reproduction must be permitted in writing by Sine Source Engineering, LLC.

CONSULTANTS

REGISTERED PROFESSIONAL ENGINEER
No. 6813611
ERIC C. RASMUSSEN
8/17/2022
STATE OF UTAH

CLARKSTON CITY HALL

ADDITION & REMODEL PROJECT
25 SOUTH MAIN STREET
CLARKSTON, UTAH 84305

MARK	DATE	DESCRIPTION

ISSUE:	Construction Documents
PROJECT NUMBER:	2022034
DATE:	AUGUST 17, 2022
DESIGNED BY:	ECR
DRAWN BY:	DDS

ELECTRICAL ONE-LINE DIAGRAM

E601

LAST SAVE 8/17/2022 T:\JOBS\2022\034 CLARKSTON CITY BLDG\01 DRAWINGS\05 ELECTRICAL\SINE SOURCE PROJECT\SHEETS\E601 ELECTRICAL ONE-LINE DIAGRAM.DWG
LAST SAVED: 17 Aug 22