AIRPORTS & LAND USE

AN INTRODUCTION FOR LOCAL LEADERS

WORKFORCE SERVICES
HOUSING & COMMUNITY DEVELOPMENT
COMMUNITY DEVELOPMENT OFFICE

AIRPORTS & LAND USE

An airport can provide numerous benefits to a community, but only if the community can balance between various local interests. Imbalances between public and private interests can result in overregulation or underregulation that fuels conflict between airport operators, sponsors, and the public. Finding balance between these interests requires establishing adequate airport land use buffers that keep people and property safe while adopting appropriately flexible regulations that do not overwhelm or frustrate the community. Although maintaining the right balance will be challenging, this document can help communities navigate common pitfalls associated with land use planning around airports.

This document was expressly created with Utah's rural communities in mind—particularly those communities who already operate or want to operate an airport. It provides a brief introduction to key considerations that local leaders need to understand about land use planning for airports. These considerations are vital for maintaining the long-term benefits of operating an airport and mitigating burdens on the surrounding community. It draws upon the guidelines and best practices promoted by the U.S. Federal Aviation Administration (FAA), the Utah Department of Transportation Division of Aeronautics (UDOT), and leaders in the aviation and aeronautics industries.

IN UTAH

THERE ARE **46** AIRPORTS

85% OF THOSE ARE IN **RURAL** COUNTIES

LAND USE AROUND AIRPORTS IS A **RURAL** ISSUE[1]

Good airport planning requires thinking comprehensively, considering long-term possibilities, and planning accordingly. This helps avoid future confrontations, protects the airport as an ongoing community asset, and provides community leaders with an opportunity to benefit future generations. Every community that hopes for or expects significant growth should consider how land use actions taken today will impact future opportunities.

Airports are generally stable community institutions whose long-term viability is determined by decisions made decades in advance. As a result, good airport plans and land-use decisions require planning well into the future. Most airport master plans contain airport goals and plans for 20–25 years and are updated about every 10 years. When considering land use around an airport, a much longer view, even 50–100 years, is required to adequately protect both residents and the airport. This long-run approach is justified by the large amount of property needed to house and maintain an airport along with the potential for frustration between airports and landowners.

As a result, community leaders should understand what the community would like to become, what the community is likely to become, and how outside forces will affect the community's final outcome. These perspectives can then be applied to a communities unique airport situation.

Operationalizing a "long-term perspective" for your airport means assessing current conditions and long-term ambitions for the airport. Current conditions inform what should be done to protect residents and airport operations as they exist today. Assessing long-term ambition informs land use designations so that potential conflicts arising from airport expansion are prevented from occurring in the future.

To assist communities and counties as they consider land use regulation surrounding an airport, UDOT and the Mountainland Association of Governments (MAG) put together a reference guide called the *Compatible Land Use Guide for Utah Airports* (LUPG) for airport land use issues in Utah[2]. LUPG lays out planning templates and considers how to address some common airport land use issues.

CURRENT CONDITIONS
LONG-TERM AMBITIONS

Factors such as new technological advancements, tourism expansion, regional growth, or an influx of business operations in or near your community could alter the demand for airport use. These are important considerations for any airport. As communities consider the future of their airports, they should look at demographic trends, consider long-range economic development and growth goals and plans, and determine how the airport fits into community ambitions. This should be a community decision, with input from the community and advice from professionals in the airport and land use fields[3].

Grant assurances are agreements entered into by an airport sponsor upon receiving federal or state assistance. FAA grant assurances 20 and 21 deal directly with land use and zoning ordinances and require airport sponsors to do what they can to maintain compatible uses around the airport (*see Appendix A*).

PLANNING TEMPLATES

LUPG defines three sizes of airports: small, medium, and large. Despite large differences in size and traffic, the same principles can be applied to manage land use around these different sizes of airports.

The graphic to the right is a general planning diagram of the areas impacted by the existence of an airport for current and future land use and contains recommendations from MAG and UDOT. These are not FAA requirements per se. They represent a planning framework that allows airports to meet FAA requirements and limits airport impact on residents through controlling specific uses. The templates on the following pages illustrate how this diagram is applied to an airport's current or planned size.

This document illustrates templates for small and medium sized airports, as large airports are uncommon and unlikely to develop in most rural areas.

NAME	DESCRIPTION
Controlled Development	The Controlled Development Zone sphere has relatively few regulations, primarily consisting of lighting and height.
Limited Development	The Limited Development Zone prohibits many kinds of uses while placing restrictions on others.
No Development	The No Development Zone only allows for airport-related building.
Approach Surfaces	Recommend no residential use to protect against noise and safety hazards.

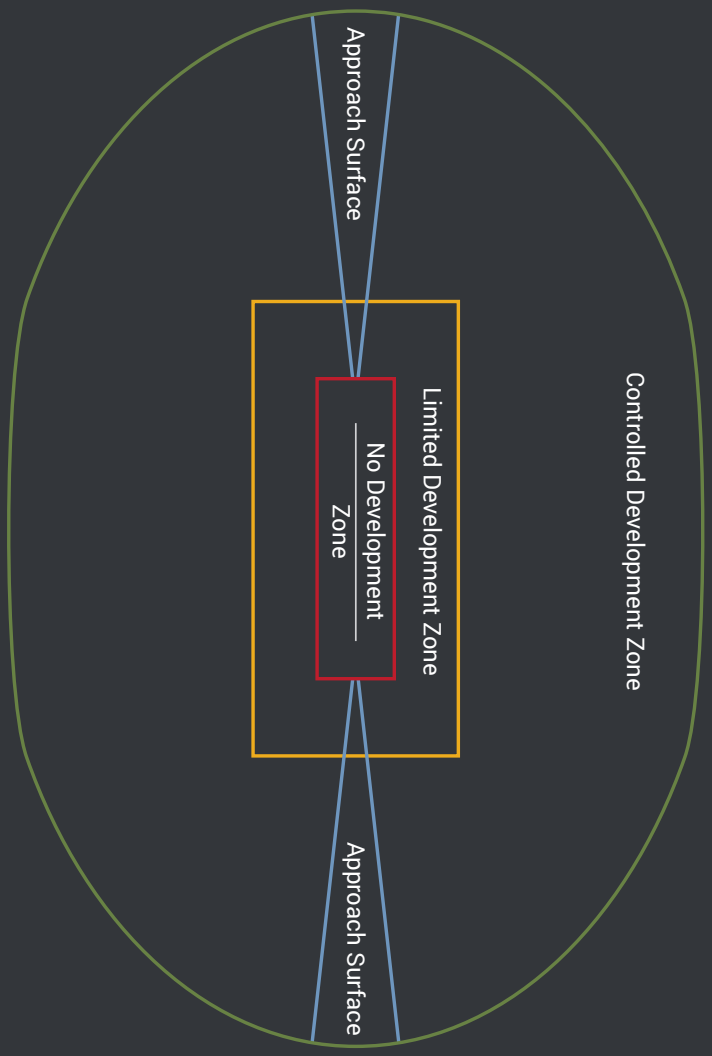

Not to scale

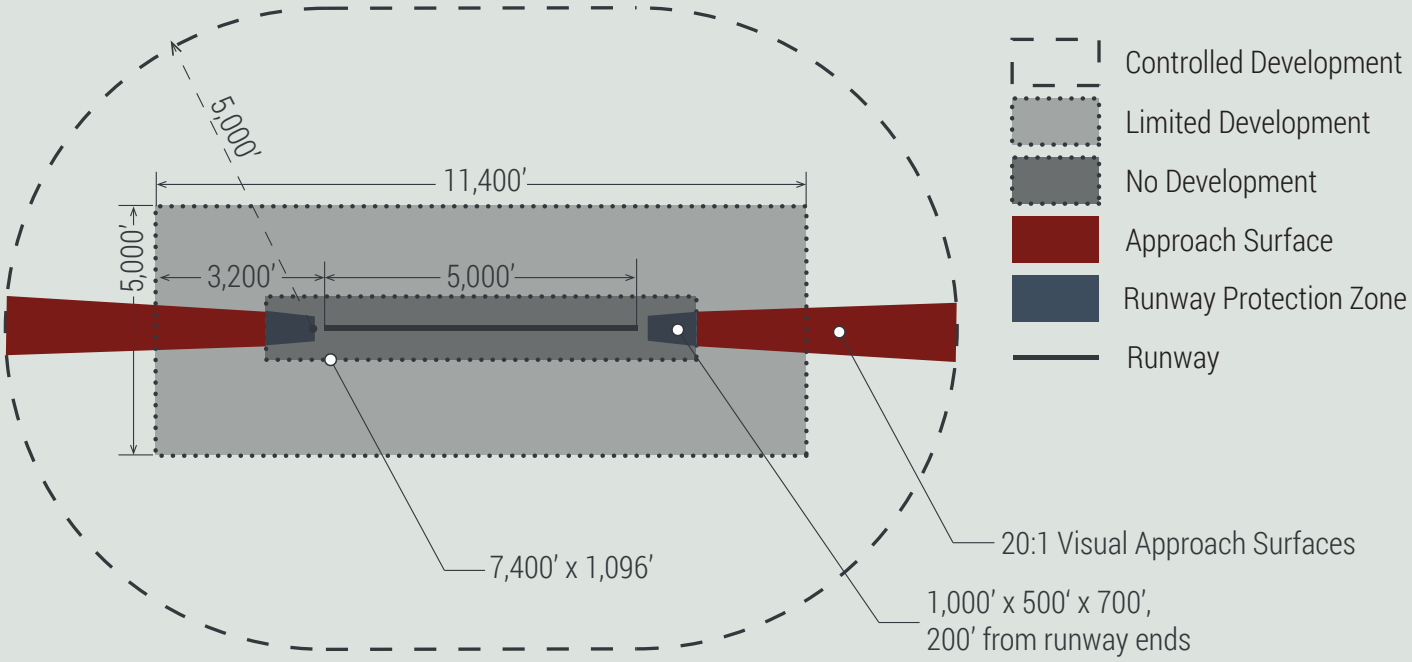

SMALL AIRPORT TEMPLATE

For "small" airports (defined to the right), the areas illustrated above provide adequate regulations to keep operating at its current level. Regulating to these specifications limits safety concerns and the likelihood of conflict related to airport operations.

Specifically, FAA regulations and LUPG suggest that 548 feet on either side of the runway centerline and 1,200 feet off both runway ends be a "no development zone," where only structures used for maintenance of the airport and storage of aircraft should be allowed.

The "Limited Development Zone" should be the width of the airport's longest runway and extend 3,200 feet beyond the end of either runway. Residential uses in this zone should be prohibited to protect residents. However, commercial, industrial, and other uses are appropriate[1].

The 5,000 foot "Controlled Development Zone" should include restrictions on crops that attract birds, require buildings over 200 feet in height to register with the FAA, control lighting open to the sky, and limit residential development (or require disclosure statements about the location relative to the airport and associated hazards)[4]."Approach Surfaces" extend from the end of the runway to the end of the "Controlled Development Zone." These areas are the most impacted by safety concerns and noise nuisances.

SMALL AIRPORTS DEFINED

LUPG defines a small airport as:

- *Runway less than 5,000 feet*
- *Less than 10,000 annual operations*
- *Visual approaches only*
- *Airport Reference Code (ARC) A-I/B-I*
- *Less than 20 based aircraft*

Just because your community's airport currently fits this definition does not mean this is the correct planning model to use for your airport. Rather, (as noted above) leaders should consider what their airport could become in the near- and long-term, then determine if they should regulate the land to protect for the possibility of expansion in the future.

Depending on community aspirations and probable futures, it may be most appropriate to prepare for a medium or even large airport. Taking current property owners rights into account is vital; communities should discuss possibilities as a community and with the FAA.

Medium airports (defined to the right) increase the size of the "No Development Zone" to 614 feet on either side of the runway centerline and 1,200 feet of either end of the runway to be used for airport specific development only.

The "Limited Development Zone" remains the width of the longest runway and 3,200 feet off the end of both sides of the runway. While LUPG recommends restricting residential development in this zone, other uses (including commercial, industrial, agricultural, etc.) are effective land uses that can maximize the transportation and shipping benefits attendant an airport.

The 10,000 foot "Controlled Development Zone" should have the same restrictions as the "Controlled Development Zone" for small airports.

"Approach Surfaces" are largely the same. However, their angle can change as new instrument approaches are used, changing from a 20:1 angle (20 feet forward for every 1 foot wider) to a 34:1 angle or even 50:1 angle depending on the instrument in use.

MEDIUM AIRPORTS DEFINED

LUPG defines a medium airport as:

- *Runway between 5,000–7,000 feet*
- *Between 10,000–50,000 operations annually*
- *Non-precision instrument approach*
- *Airport Reference Code (ARC) B-II*
- *Between 20–100 based aircraft*
- *Occassional jet aircraft operations*

If leaders believe their airport will grow beyond the medium size, they may need to plan for an even larger airport. They should consider the potential timeline and discuss when this could occur and what steps they can take to protect that possibility for the airport.

Appendix B has specific recommendations for what constitutes compatible and incompatible land uses in each "Zone" and for the "Approach Surfaces." These recommendations are an important tool for leaders as they discuss what zoning and regulatory measures should be taken to protect residents and the airport.

MEDIUM AIRPORT TEMPLATE

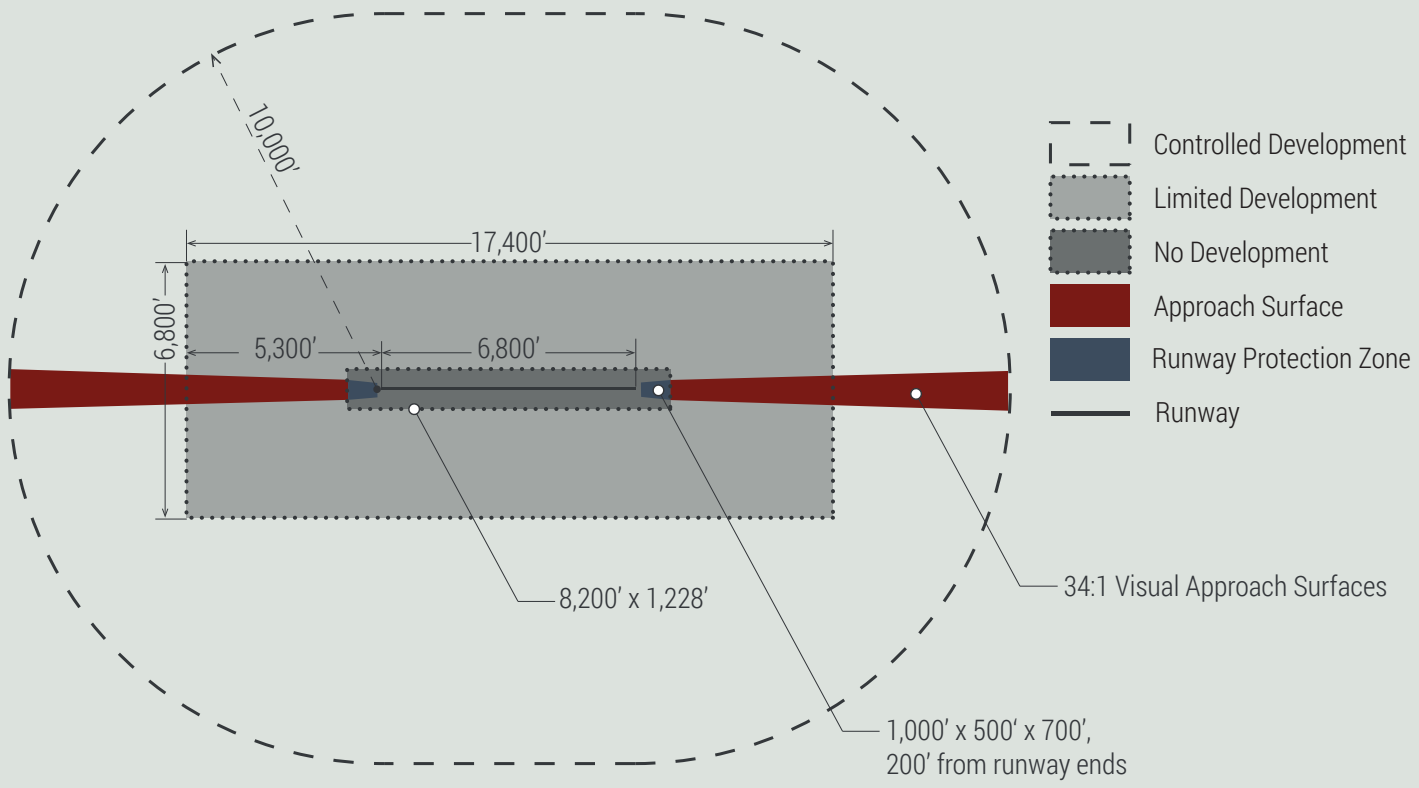

Leaders should first consider the airport's current size, followed by the intended runway size (information on planned expansions in the next 15–25 years should be available in the airport master plan, while expansions in a longer time frame will require assessment from leaders). The estimated maximum airport size should be the guide on zone sizes and regulation. This ensures that when the airport does expand, it will not have significant negative impacts on residents.

Where expansion is not likely for decades, but leadership want to retain the possibility of expansion, interim uses can allow certain uses in the short term with assurances from landowners that the use will phase out over time. These protect plausible expansions and property owners' rights.

OVERLAY ZONING

Traditional zones can be adopted for each of these different areas (no development, limited development, controlled development, approach surfaces); however, overlay zones can simplify land use regulations for land owners and residents. Overlay zones are sets of additional standards or requirements that are applied over the top of current zoning (*see Appendix C*). Overlay zones allow leaders to maintain consistent zones, while ensuring requirements for specific areas are met before development can occur. Overlay zones are recommended in the case of airports for four primary reasons:

1. **Flexibility**. An overlay zone still allows the zoning underneath to change. It ensures that however the zoning changes, the overlay will still protect residents from potential negative impacts of the airport.
2. **Workload**. It reduces workload for those developing the zoning regulations. Rather than creating entirely new zones, overlay zones allow the appropriate requirements to be added onto the current zoning structure.
3. **Community Understanding**. While overlay zones could increase complexity initially, it is overall much simpler for land owners, and residents. It helps buyers to understand that they are purchasing a commercial zone with additional requirements rather than understanding multiple (unfamiliar) new zones.
4. **Political feasibility**. Because overlay zones are only applied to specific areas and maintain the underlying zoning, they can be more politically feasible than multiple new zones.

As leaders work with community members, landowners, and the airport board, they should look for the option that best meets community desires and airport needs.

COMPATIBLE LAND USES

Allowable uses in these zones do not encroach on height restrictions, prevent future safety hazards, reduce frustrations between citizens and the airport, and maintain long-term airport viability. In contrast, allowing incompatible uses increases frustrations between residents and the airport. These tensions typically increase as incompatible uses become more common and airport traffic increases. Land use around airports, even with limited development, can be threatened by incompatible uses. If the airport expands operations, conflict with residents is a common result[5]. See Appendix B for LUPG's list of compatible and non-compatible uses.

News articles from around the country highlight frustrations between incompatible uses surrounding airports and airport management[5]. Adequate buffers will protect both residents and continued airport use, preventing these conflicts before they happen.

PLANNING FOR LAND USE

WHO MANAGES PLANNING?

An airport sponsor is the city, county, company, or individual responsible for the airport. The airport's master plan is completed by the airport sponsor and establishes the airports intentions for the next 20–25 years. However, land use surrounding the airport is up to the municipalities and counties that have jurisdiction over the airport's current and potential area of influence (*see maps pages 6-7*). As a result, land use planning around an airport regularly involves more than one community and/or the county.

For municipalities where the area of airport influence, or controlled development zone (*see map on pages 6-7*), is wholly within a community's boundaries, the community or county planning commission makes recommendations to the legislative body who adopts, alters, or rejects the recommendations.

For airports with influence areas that cross jurisdictional boundaries, each community maintains zoning authority for the area within their boundaries. If communities determine to maintain zoning authority over their portion of the airport influence area, significant efforts to streamline and coordinate zoning regulations between entities is vital to avoid future conflict.

The Utah State Legislature has provided another alternative for cross-jurisdictional airports in the Airport Zoning Act[6]. This act provides leadership with the option to create a Joint Airport Zoning Board. The commission requires "two representatives appointed by each political subdivision participating in its creation," and provides the commission with authority to "adopt, administer, and enforce… airport zoning regulations for the airport hazard area."

There are benefits and drawbacks to joint boards. Relinquishing local control can help increase zoning consistency for all residents by streamlining regulation, reducing political pressure on individual communities, and forcing communities to create mutually agreeable terms. In contrast, joint boards may delay rule creation, or frustrate the current planning commissions and landowners who are unfamiliar with the concept of an airport zoning board.

Ultimately, it is up to the airport sponsor and entities with jurisdiction in the airport hazard area to determine when and how to handle regulations around an airport. Communities should not wait for conflicts to arise before trying to address land use in the area. Rather, they should proactively create a cooperative approach that increases clarity for landowners and public officials.

PLANNING QUESTIONS

The following questions should help entities plan for an airport's future:

Current Zoning. *Do current zones (or overlay zones) allow compatible uses while prohibiting incompatible uses?*

Are zones more restrictive than necessary, potentially and unnecessarily reducing land values?

Current Plans. *Consider the airport master plan. Are there intentions to extend the runway? Increase use? Expand facilities?*

How will these planned changes impact the size of areas that need additional land use regulations?

How does the airport fit into current quality of life and economic development in the community?

Future Possibilities. *Consider the next 50, 75, and 100 years. What are the ambitions and possibilities for the community?*

How does the airport fit into the economic ambitions and possibilities of the community in this time frame?

What essential services does the airport provide? What expanded services are foreseen or hoped for?

How will decisions affect landowner rights over the same time period?

LAND USE TOOLS

LUPG provides information on a variety of tools that airport sponsors, joint airport zoning boards, and affected communities can use to protect airports and residents from negative impacts. These tools are either cooperative (working with landowners to achieve mutually acceptable arrangements) or unilateral (government taking action without consent from property owners).

COOPERATIVE

Fee-simple Acquisition. Airport sponsors should own all land used for runways, terminals, hangars, tie down areas, and other airport-only uses. Fee title acquisition entails purchasing the land and all associated development rights.

Note: At times, purchasing land outside of these areas, then reselling them with conditions attached can help mitigate future problems.

Avigation Easements. Avigation easements are rights to the use of airspace above property. These are typically cost effective and protect the airport, pilots, and citizens from dangerous development.

Transfer or Purchase of Development Rights and Density Transfers. Transferring development rights separates development rights from the physical property and allows that development to move to another location[7]. This enables airport sponsors to protect the highest priority areas while maintaining property owner's rights to develop.

Real Estate Disclosure Statements. A real estate disclosure statements require sellers to notify potential buyers that overflight and noise impacts are likely to occur. These are typically attached to the warranty deed. Communities considering this mitigation tactic should require disclosures for areas that are likely to have an impact in the future.

Developer Incentives and Agreements. Incentives and agreements with developers can be used to limit density in a specific section of proposed development by trading it for higher density development in a zone further from the airport.

UNILATERAL

Zoning. Creating an overlay zone that prohibits incompatible uses protects airport users, current residents, and future residents from potential hazards and nuisances. Compatible and incompatible uses must be identified and defined in the community's land use code. The Land Use Planning Guide for Utah Airports provides recommended compatible uses for different overlay zones surrounding an airport (see Appendix B).

Interim Permits. Interim use permits allow uses for a set period of time to help protect the airports long-term development. This generally excludes any sort of residential or high-density uses. Interim uses require cooperation from landowners to work.

Note: Don't do conditional use permits.

Dedications and Extractions. Dedications are impact fees paid for with land, rather than cash. A developer may obtain a zone change for a specific area, and "pay" for the dedication by not developing in high sensitivity areas. Extractions are the same as dedications, except that the land cannot be substituted for cash—they are required land donations from the developer.

Eminent Domain. Eminent domain is the power to take private property for public use in exchange for fair compensation without the owner's consent. Eminent domain can also be conducted on landowners' future development rights. In all eminent domain cases, the government is required to (1) pay just compensation for the property and (2) demonstrate a need for the property for public use[8].

Additional governmental tools exist. The best way to address issues is using a mix of available options that match community circumstances and culture, while reviewing airport planning best practices, current conditions, future aspirations, and then developing a plan that best meets community needs.

DRONES

Additional considerations exist for airports—particularly unmanned aircrafts. According to FAA rules, unmanned aircraft operators are required to register their drone with FAA, and must inform airport flight control if they intend to operate their drone within five miles of an airport[9]. The State of Utah could be introducing additional regulations in current or future legislative sessions. Airport sponsors and surrounding cities should pay attention to these rules and ensure residents and visitors are informed to help keep pilots and residents safe.

Residents of small communities may question the importance of protecting small, rarely used airports, or be unable to fathom their tiny airport having long-term, major impacts on the quality of life for residents. When communities zone explicitly to protect an airport and residents, they are protecting future potential and community ambition. The impact of the airport may not be felt for decades, however the potential benefits to local economies is enormous.

Leaders working to protect their airports and residents should give special consideration to maximizing property use options for affected landowners. Application of a wide range of tools will help ensure landowners have input in their land's future and can optimize their land's uses. Airports provide opportunities and challenges to landowners; leadership should actively help landowners recognize the opportunities while mitigating the impacts. Communities should come together to determine the possibilities for their community and airport and take steps necessary to protect both into the future.

LANDOWNER IMPACTS & PROTECTING AIRPORTS

REFERENCES & ADDITIONAL RESOURCES

Significant portions of this document came from the *Compatible Land Use Planning Guide for Utah Airports* prepared by the Wasatch Front Regional Council and Utah Division of Aeronautics (part of the Utah Department of Transportation) in December 2000. UDOT and FAA both recommended this guide as a relevant, good thought process for airport land use. Many additional documents were reviewed for information on FAA requirements, best practices, and land-use challenges other communities have faced surrounding their airports. The remainder came from meetings and interviews with UDOT, FAA, and involved residents and leaders. The resources below can provide additional information for leaders.

1. According to Utah Department of Transportation Aeronautics Division. *https://www.udot.utah.gov/main/uconowner.gf?n=200703070613563*.
2. Wasatch Front Regional Council. Mountainland Association of Governments. Utah Division of Aeronautics. "Compatible Land Use Planning Guide for Utah Airports." 2000. *https://www.udot.utah.gov/main/uconowner.gf?n=200411180926131*
3. Friesen, Josh. The next step in aviation — Idaho drone company foresees major cargo hub in Pocatello. Nov. 24, 2016. Idaho State Journal. Accessed online. Dec. 1, 2016. http://idahostatejournal.com/members/the-next-step-in-aviation-idaho-drone-company-foresees-major/article_b88b1f46-5aec-5b70-bd97-2aab9d5d67fe.html.
4. Federal Aviation Administration. "5190.6B Chapter 20: Compatible Land Use and Airspace Protection ." 2009. https://www.faa.gov/airports/resources/publications/orders/compliance_5190_6/media/5190_6b_chap20.pdf.
5. Miller, Carin. Angry residents demand City Council fix flight school noise pollution. June 11, 2015. St. George News. Accessed online. Dec. 1, 2016. http://www.stgeorgeutah.com/news/archive/2015/06/11/cmm-angry-residents-city-council-flight-school-noise-pollution/#.WECjjLIrI4k.

   Di Caro, Martin. Jet Noise Is No Joke For Residents Burned By Report About Airport Complaints. Oct. 26, 2016. WAMU 88.5. Accessed online. Dec. 1, 2016. http://wamu.org/story/16/10/26/jet_noise_is_no_joke_for_residents_burned_by_report_on_airport_complaints/.

   Aguilar, John. Smaller airports in Denver metro area warily watch encroaching development. Sept. 22, 2016. The Denver Post. Accessed online. Dec. 1, 2016. http://www.denverpost.com/2016/09/22/smaller-airports-denver-development/.

   Barthlome, Ed. Moving in next to an airport and then complaining about the noise. Sept. 23, 2016. The Denver Post. Accessed online. Dec. 1, 2016. http://www.denverpost.com/2016/09/23/moving-in-next-to-an-airport-and-then-complaining-about-the-noise/.

   Emerson, Sandra. Pilots at Redlands Airport concerned over proposed development. July 9, 2015. Redlands Daily Facts. Accessed online. Dec. 1, 2016. http://www.redlandsdailyfacts.com/business/20150709/pilots-at-redlands-airport-concerned-over-proposed-development.
6. Utah State Code. Airport Zoning Act. 72-10-4 (403-406).
7. Utah State Property Rights Ombudsman. Transferable Development Rights. http://propertyrights.utah.gov/transferable-development-rights/.
8. Utah State Property Rights Ombudsman. Takings and Eminent Domain. http://propertyrights.utah.gov/takings-and-eminent-domain/.
9. Federal Aviation Administration. "Airspace Restrictions." Unmanned Aircraft Systems, Where to Fly. https://www.faa.gov/uas/where_to_fly/airspace_restrictions/.

ADDITIONAL RESOURCES

Federal Aviation Administration. "Federal Aviation Regulation Part 77." http://www.ecfr.gov/cgi-bin/text-idx?c=ecfr&SID=61302bd90d79271a583474ad2f9dcd7e&rgn=div5&view=text&node=14:2.0.1.2.9&idno=14.

Federal Aviation Administration. "150/51&-48 "A Model Ordinance to Limit the Height of Objects Around Airports." 1987. https://www.faa.gov/documentLibrary/media/advisory_circular/150-5190-4A/150_5190_4A.pdf.

Federal Aviation Administration. "Noise Control and Compatibility Planning for Airports." 1983. https://www.faa.gov/documentLibrary/media/advisory_circular/150-5020-1/150_5020_1.pdf.

Federal Aviation Administration. "Obstruction Identification Surfaces." Federal Aviation Regulation Part 77. https://www.ngs.noaa.gov/AERO/oisspec.html.

APPENDIX A

ASSURANCES REQUIRED OF AIRPORT SPONSORS RECEIVING FAA FUNDS

These are assurances required of airport sponsors who receive federal funds from FAA. Manti-Ephraim has signed these (or similar) assurances with the intent of protecting nearby residents while ensuring long-term viability of the airport. These are taken from the Aircraft Owner and Pilots Association's (AOPA) "Guide to Airport Noise and Compatible Land Use." These are the two assurances most directly related to land use and provide context for the Cities' obligations.

ASSURANCE 20

Hazard Removal and Mitigation: [The airport owner] will take appropriate action to assure that such terminal airspace as is required to protect instrument and visual operations to the airport (including establishing minimum flight altitudes) will be adequately cleared and protected by removing, lowering, relocating, marking, or lighting, or otherwise mitigating existing airport hazards and by preventing the establishment or creating of future airport hazards.

ASSURANCE 21

Compatible Land Use: [The airport owner] will take appropriate action, including the adoption of zoning laws, to the extent reasonable, to restrict the use of land adjacent to or in the immediate vicinity of the airport to activities and purposes compatible with normal airport operations, including landing and takeoff of aircraft. In addition, if the project is for noise compatibility program implementation, it will not cause or permit any change in land use within its jurisdiction that will reduce with compatibility, with respect to the airport, of the noise compatibility measures upon which federal funds have been expended.

APPENDIX B

COMPATIBLE LAND USE MATRIX (PAGES 27-32)

In their 2000 document, Wasatch Front Regional Council, Mountain Land Association of Governments, and Utah's Division of Aeronautics put together a list of compatible land uses that will protect residents from noise, light, and safety concerns, while allowing compatible uses near the airport. This helps protect property owners rights to use their property while securing the future of the airport. The table on pages 27 - 32 of the Compatible Land Use Planning Guide for Utah airports highlight recommended land uses in the zones established in the general planning diagram on page five of this document. These recommendations follow on the next six pages.

TABLE 3 - RECOMMENDED LAND USES AND ACTIVITIES	NO DEVELOPMENT (RED)	LIMITED DEVELOPMENT (BLUE)	LIMITED DEVELOPMENT APPROACH SURFACE	CONTROLLED DEVELOPMENT (GREEN)	CONTROLLED DEVELOPMENT APPROACH SURFACE
RESIDENTIAL DEVELOPMENT					
Single Unites	N	I [1,3]	N	C [4]	I [2,3]
Duplexes	N	I [1,3]	N	C [4]	I [2,3]
Multi-Family Units	N	I [1,3]	N	C [4]	I [2,3]
Hotels and Motels	N	I [1,3]	N	C [4]	I [2,3]
Mobile Home Parks	N	N	N	C [4]	I [2,3]
Recreational Vehicle Parks	N	N	N	C [4]	I [2,3]
Other Residential	N	I [1,3]	N	C [4]	I [2,3]
OUTDOOR ACTIVITIES					
Religious Services and Assemblies	N	N	N	C [6,7]	U
Entertainment Assemblies	N	N	N	C [6,7]	U
Sports Event Assemblies	N	N	N	C [6,7]	U
Sports Arenas, Courts, Fields	N	N	N	C [6,7]	U
Circuses and Carnivals	N	N	N	C [6,7]	U
Amusement and Theme Parks	N	N	N	C [6,7]	U
Playgrounds and Neighborhood Parks	N	I [5]	N	C [6,7]	U
Community and Regional Parks	N	I [5]	N	C [6,7]	U

Y = Land use is compatible and should be permitted	**C** = Land use is generally compatible and should be permitted provided certain restrictions are complied with.	**I** = Land use is generally incompatible and should be prohibited. If a demonstrated community need for the development exists and no viable alternative exists, the use may be allowed provided specified conditions are met.	**U** = Land use is not clearly compatible or incompatible	**N** = Land use is not compatible and should be prohibited.

1-Limit densities to <25 people per acre.
2-Limit densities to <50 people per acre.
3-During site development shift structures away from runway centerline when possible
4-Cluster development to maximize open space
5-Prohibit high overhead lighting
6-Require downward shading of outdoor lighting
7-Obtain Avigation Easements
8-Obtain obstruction easements
9-Ensure permitted uses will not create large areas of standing water, or generate smoke, steam or other visual obstructions
10-Require the use of approved sound proofing techniques

TABLE 3 - RECOMMENDED LAND USES AND ACTIVITIES	NO DEVELOPMENT (RED)	LIMITED DEVELOPMENT (BLUE)	LIMITED DEVELOPMENT APPROACH SURFACE	CONTROLLED DEVELOPMENT (GREEN)	CONTROLLED DEVELOPMENT APPROACH SURFACE
TRANSPORTATION \ COMMUNICATION \ UTILITIES					
Passenger Facilities	I	Y	C	Y	Y
Cargo-Freight Facilities	I	Y	C	Y	Y
Road and Rail Facilities	I	Y	C	Y	Y
Vehicle Parking	I	Y	C	Y	Y
Vehicle Storage	N	Y	C	Y	Y
Telecommunications	N	Y	C	Y	Y
Broadcast Communications	N	Y	C	Y	Y
Electric Generating Plants	N	I	I	C	C
Sewer-Waste Water Treatment	N	C	C	Y	Y
Gas Utility Facilities	N	C	N	C	C
Electric Utility Facilities	N	C	I	C	C

Y = Land use is compatible and should be permitted	**C** = Land use is generally compatible and should be permitted provided certain restrictions are complied with.	**I** = Land use is generally incompatible and should be prohibited. If a demonstrated community need for the development exists and no viable alternative exists, the use may be allowed provided specified conditions are met.	**U** = Land use is not clearly compatible or incompatible	**N** = Land use is not compatible and should be prohibited.

1-Limit densities to <25 people per acre.
2-Limit densities to <50 people per acre.
3-During site development shift structures away from runway centerline when possible
4-Cluster development to maximize open space
5-Prohibit high overhead lighting
6-Require downward shading of outdoor lighting
7-Obtain Avigation Easements
8-Obtain obstruction easements
9-Ensure permitted uses will not create large areas of standing water, or generate smoke, steam or other visual obstructions
10-Require the use of approved sound proofing techniques

TABLE 3 - RECOMMENDED LAND USES AND ACTIVITIES	NO DEVELOPMENT (RED)	LIMITED DEVELOPMENT (BLUE)	LIMITED DEVELOPMENT APPROACH SURFACE	CONTROLLED DEVELOPMENT (GREEN)	CONTROLLED DEVELOPMENT APPROACH SURFACE
TRANSPORTATION \ COMMUNICATION \ UTILITIES					
Passenger Facilities	I	Y	C	Y	Y
Cargo-Freight Facilities	I	Y	C	Y	Y
Road and Rail Facilities	I	Y	C	Y	Y
Vehicle Parking	I	Y	C	Y	Y
Vehicle Storage	N	Y	C	Y	Y
Telecommunications	N	Y	C	Y	Y
Broadcast Communications	N	Y	C	Y	Y
Electric Generating Plants	N	I	I	C	C
Sewer-Waste Water Treatment	N	C	C	Y	Y
Gas Utility Facilities	N	C	N	C	C
Electric Utility Facilities	N	C	I	C	C

Y = Land use is compatible and should be permitted	**C** = Land use is generally compatible and should be permitted provided certain restrictions are complied with.	**I** = Land use is generally incompatible and should be prohibited. If a demonstrated community need for the development exists and no viable alternative exists, the use may be allowed provided specified conditions are met.	**U** = Land use is not clearly compatible or incompatible	**N** = Land use is not compatible and should be prohibited.

1-Limit densities to <25 people per acre.
2-Limit densities to <50 people per acre.
3-During site development shift structures away from runway centerline when possible
4-Cluster development to maximize open space
5-Prohibit high overhead lighting
6-Require downward shading of outdoor lighting
7-Obtain Avigation Easements
8-Obtain obstruction easements
9-Ensure permitted uses will not create large areas of standing water, or generate smoke, steam or other visual obstructions
10-Require the use of approved sound proofing techniques

TABLE 3 - RECOMMENDED LAND USES AND ACTIVITIES	NO DEVELOPMENT (RED)	LIMITED DEVELOPMENT (BLUE)	LIMITED DEVELOPMENT APPROACH SURFACE	CONTROLLED DEVELOPMENT (GREEN)	CONTROLLED DEVELOPMENT APPROACH SURFACE
RETAIL TRADE					
Building Materials and Hardware	N	Y	C [3, 7]	Y	Y
Automotive, Farm and Marine Craft	N	Y	C [3, 7]	Y	Y
Apparel and General Merchandise	N	Y	C [3, 7]	Y	Y
Groceries and Food Stuff	N	C [5, 6, 8]	I [3, 7]	Y	Y
Eating and Drinking Establishments	N	C [5, 6, 8]	I [3, 7]	C	C
Shopping Malls and Centers	N	C [5, 6, 8]	I [3, 7]	C	C
Gas and Convenience Stores	N	C [5, 6, 8]	I [3, 7]	C	C
Liquified and Bottled Gas	N	I	I [3, 7]	C	C
WHOLESALE TRADE					
Home Furnishings and Building Materials	N	C	C [3, 7]	C	C
Food Products and General Merchandise	N	C	C [3, 7]	C	C
Liquified Gasses	N	I	N	C	C
Petroleum and Distillate Products	N	I	N	C	C
Industrial Chemicals	N	I	N	C	C
Explosive and Pyrotechnic Products	N	I	N	C	C
Other Wholesale Trade	N	C	C [3, 7]	C	C

Y = Land use is compatible and should be permitted	**C** = Land use is generally compatible and should be permitted provided certain restrictions are complied with.	**I** = Land use is generally incompatible and should be prohibited. If a demonstrated community need for the development exists and no viable alternative exists, the use may be allowed provided specified conditions are met.	**U** = Land use is not clearly compatible or incompatible	**N** = Land use is not compatible and should be prohibited

1-Limit densities to <25 people per acre.
2-Limit densities to <50 people per acre.
3-During site development shift structures away from runway centerline when possible
4-Cluster development to maximize open space
5-Prohibit high overhead lighting
6-Require downward shading of outdoor lighting
7-Obtain Avigation Easements
8-Obtain obstruction easements
9-Ensure permitted uses will not create large areas of standing water, or generate smoke, steam or other visual obstructions.
10-Require the use of approved sound proofing techniques

TABLE 3 - RECOMMENDED LAND USES AND ACTIVITIES	NO DEVELOPMENT (RED)	LIMITED DEVELOPMENT (BLUE)	LIMITED DEVELOPMENT APPROACH SURFACE	CONTROLLED DEVELOPMENT (GREEN)	CONTROLLED DEVELOPMENT APPROACH SURFACE
MANUFACTURING					
Food Products and Processing	N	C [8, 9]	C [8, 9]	Y	C
Textiles and Apparel	N	C [8, 9]	C [8, 9]	Y	C
Lumber and Wood Products	N	C [8, 9]	C [8, 9]	Y	C
Paper and Allied Products	N	C [8, 9]	C [8, 9]	Y	C
Chemicals and Allied Products	N	I [8, 9]	N	C	C
Petroleum Refining and Related Products	N	I [8, 9]	N	C	C
Explosive and Pyrotechnic Products	N	I [8, 9]	N	C	C
Rubber and Plastic Products	N	C [8, 9]	I [8, 9]	C	C
Clay and Glass Products	N	C [8, 9]	I [8, 9]	C	C
Metal Fabrication	N	C [8, 9]	I [8, 9]	C	C
Electronic and Optic Products	N	C [8, 9]	C [8, 9]	C	C
Professional and Scientific Products	N	C [8, 9]	C [8, 9]	C	C
Other Manufacturing	N	C [8, 9]	C [8, 9]	C	C

Y = Land use is compatible and should be permitted	**C** = Land use is generally compatible and should be permitted provided certain restrictions are complied with.	**I** = Land use is generally incompatible and should be prohibited. If a demonstrated community need for the development exists and no viable alternative exists, the use may be allowed provided specified conditions are met.	**U** = Land use is not clearly compatible or incompatible	**N** = Land use is not compatible and should be prohibited

1-Limit densities to <25 people per acre.
2-Limit densities to <50 people per acre.
3-During site development shift structures away from runway centerline when possible
4-Cluster development to maximize open space
5-Prohibit high overhead lighting
6-Require downward shading of outdoor lighting
7-Obtain Avigation Easements
8-Obtain obstruction easements
9-Ensure permitted uses will not create large areas of standing water, or generate smoke, steam or other visual obstructions.
10-Require the use of approved sound proofing techniques

TABLE 3 - RECOMMENDED LAND USES AND ACTIVITIES	NO DEVELOPMENT (RED)	LIMITED DEVELOPMENT (BLUE)	LIMITED DEVELOPMENT APPROACH SURFACE	CONTROLLED DEVELOPMENT (GREEN)	CONTROLLED DEVELOPMENT APPROACH SURFACE
RESOURCE PRODUCTION AND RECOVERY					
Livestock and Poultry Breeding	N	Y	C [8]	Y	Y
Animal and Poultry Breeding	N	Y	C [8]	Y	Y
Crop and Related Agricultural Production	N	Y	Y	Y	Y
Fishing and Aquiculture Activities	N	Y	C [8]	Y	Y
Forestry and Timber Production	N	Y	C [8]	Y	Y
Oil and Natural Gas Wells	N	Y	C [8]	Y	Y
Strip and Open Pit Mining	N	Y	C	Y	Y
Stone and Mineral Quarries	N	Y	C	Y	Y
Other Mining Activity	N	Y	C	Y	Y

Y = Land use is compatible and should be permitted	**C** = Land use is generally compatible and should be permitted provided certain restrictions are complied with.	**I** = Land use is generally incompatible and should be prohibited. If a demonstrated community need for the development exists and no viable alternative exists, the use may be allowed provided specified conditions are met.	**U** = Land use is not clearly compatible or incompatible	**N** = Land use is not compatible and should be prohibited

1-Limit densities to <25 people per acre.
2-Limit densities to <50 people per acre.
3-During site development shift structures away from runway centerline when possible
4-Cluster development to maximize open space
5-Prohibit high overhead lighting
6-Require downward shading of outdoor lighting
7-Obtain Avigation Easements
8-Obtain Obstruction easements
9-Ensure permitted uses will not create large areas of standing water, or generate smoke, steam or other visual obstructions.
10-Require the use of approved sound proofing techniques

APPENDIX C

OVERVIEW OF OVERLAY ZONES FROM AMERICAN PLANNING ASSOCIATION

The following is a brief description of overlay zones, their intended use, history, and legal implications. Additional information is available online. This is provided as a brief introduction for those not familiar with the concept.

OVERLAY ZONES

Basics — An overlay zone is a zoning district which is applied over one or more previously established zoning districts, establishing additional or stricter standards and criteria for covered properties in addition to those of the underlying zoning district. Communities often use overlay zones to protect special features such as historic buildings, wetlands, steep slopes, and waterfronts. Overlay zones can also be used to promote specific development projects, such as mixed-used developments, waterfront developments, housing along transit corridors, or affordable housing.

Historical and Legal Implications — As with traditional zoning, uses that can be justified as contributing to the health, safety, and welfare of the population are generally allowed to be regulated via overlay zoning. Common regulations include those for historic districts, natural resource protection, and economic development, though local governments are given broad authority to determine what regulation is in their community's best interest. As with zoning, however, communities must be careful not to violate the "uniformity clause" of the Standard State Zoning Enabling Act by ensuring that all similar properties are treated similarly. For further court opinions on the legality of overlay zoning, see Jachimek v. Superior Court, 169 Ariz. 317 (Ariz. 1991) and A- S- P Associates v. City of Raleigh, 258 S.E.2d 444 (N.C. 1979).

Discussion — Overlay zones have the potential to be very effective governmental regulatory tools. Since they tailor regulations to specific properties and districts to meet specific community goals, they can be more politically feasible to implement and can help communities meet stated goals or address specific inequities. On the other hand, they can create inefficiencies and inequities by applying regulations and restrictions to some properties and not others. Moreover, additional regulations may increase time and expense both for developers and for the public bodies involved in the development approval process.

APPENDIX D

UTAH'S AIRPORTS

The Utah Department of Transportation's Division of Aeronautics is responsible for transportation issues in the state involving airports. The Federal Aviation Administration (FAA) provides rules that apply nationwide for all airport and plane use. FAA is broken into nine regions across the United States. Utah falls into the Northwest Mountain region. The Northwest Mountain region's office for Utah's district is in Denver. They provide funding for airports in the region and information for airport operations.

According to UDOT, there are 46 airports in the state of Utah—39 of these are in rural areas (see map to the right). There are four primary commercial airports, three commercial service airports, three reliever airports, and 36 general aviation airports.

AIRPORT CATEGORY DEFINITIONS

Primary Commercial Airport: *Airports with > 10,000 passenger boardings annually.*

Commercial Service Airport: *Airports with between 2,500–10,000 passenger boardings annually.*

Reliever Airport: *Airports designated to relieve commercial airport congestion and provide general aviation access.*

General Aviation Airport: *Public-use airports without scheduled service or with < 2,500 passenger boardings annually.*

Source: Federal Aviation Administration, Airport Categories

CONTACTS

UDOT Division of Aeronautics
135 N 2400 W
Salt Lake City, UT 84116
801-715-2260
tinyurl.com/zgmm46v

FAA Denver Airports District Office
26805 E. 68th Avenue, Suite 224
Denver, CO 80249-6361
303-342-1260
www.faa.gov/airports/northwest_mountain/about_airports/denver/

UTAH'S AIRPORTS

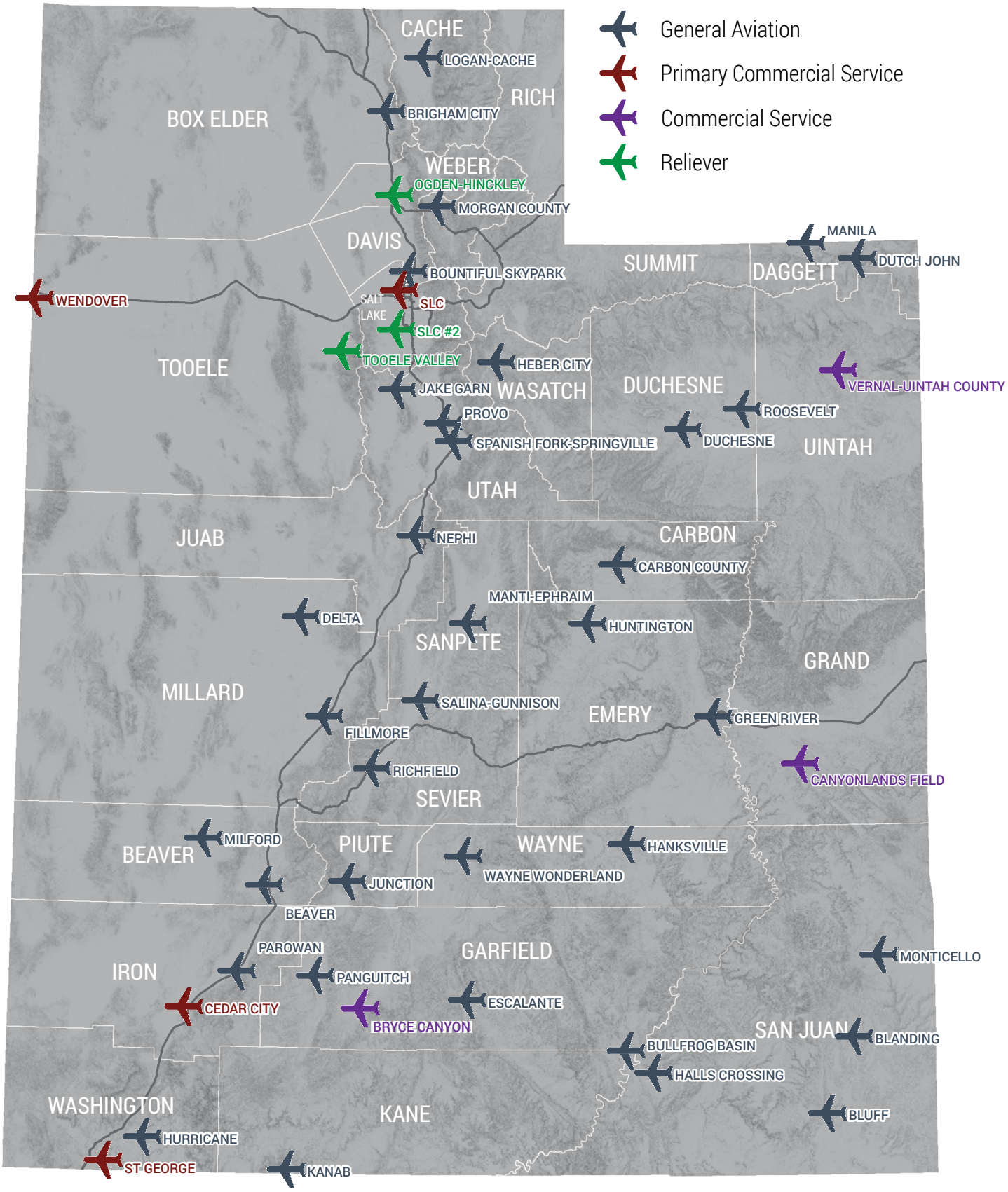

WORKFORCE SERVICES
HOUSING & COMMUNITY DEVELOPMENT
COMMUNITY DEVELOPMENT OFFICE

For more resources, visit ruralplanning.org/toolbox

The Community Development Office is housed in the Housing and Community Development Division, part of the Utah Department of Workforce Services.

info@ruralplanning.org • 801-468-0133

AUG2018