North Ogden City Corporation

400 East Waterline Project

September 2021

WASATCH CIVIL
Consulting Engineering

Contract Documents

NORTH OGDEN

400 EAST WATERLINE PROJECT

September 2021

Owner

North Ogden City Corporation
505 E 2600 N
North Ogden City, Utah 84414

Engineer

Wasatch Civil Consulting Engineering
1150 South Depot Drive, Suite 225
Ogden, Utah 84404
(801) 775-9191

Table of Contents

North Ogden City
400 East Waterline Project

Section I. Bidding Requirements:

I-A ..... Advertisement for Bid

I-B ..... Instructions to Bidders

I-C ..... Bid Form/ Measurement & Payment

I-D ..... Choosing by Advantages System of Decision Making

Section II. Contract Documents:

II-A ..... Contract Agreement

II-B ..... Bond Forms

II-C ..... General Conditions

II-D ..... Supplementary Conditions

II-E ..... Technical Specifications

II-F ..... Site Drawings

Sheet No.	Title
1.	Cover Sheet
2.	Site Plan

II-G ..... Supplemental North Ogden City Standard Drawings

CS-02.	Public Roads
CS-03.	Public Roads
CS-04.	Public Roads
CW-01.	Culinary Water
CW-02.	Culinary Water
CW-03.	Culinary Water

SECTION I

BIDDING REQUIREMENTS

WASATCH CIVIL

Consulting Engineering

SECTION 1-A

ADVERTISEMENT FOR BID

WASATCH CIVIL

Consulting Engineering

Advertisement for Bid

400 EAST WATERLINE PROJECT

North Ogden City Corporation

RECEIPT OF BIDS: Sealed bids will be accepted at the Office of the City Recorder North Ogden City, 505 E 2600 N, North Ogden City, Utah, 84414, until 2:00 p.m. on Thursday, October 7, 2021, for the 400 East Waterline Project for North Ogden City Corporation.

DESCRIPTION OF WORK: The work consists of the construction of a 12" Waterline along 400 East. The specific work items include installing approximately 980 linear feet of 12" culinary waterline, and approximately 10,000 square feet of concrete sidewalk and driveways as indicated in the Contract Documents.

LOCATION OF WORK: The work is located along 400 East (Washington Boulevard) between 1700 North and 1500 North in North Ogden, Utah.

COMPLETION OF WORK: All work specified in the contract documents shall be completed within 30 days from the date specified in the Notice to Proceed.

OPENING OF BIDS: Bids will be publicly opened at 2:00 p.m. on Thursday, October 7, 2021, at the aforementioned office of the City Recorder North Ogden City.

OBTAINING CONTRACT DOCUMENTS: Contract Documents may be obtained at North Ogden City's website or at the office of Wasatch Civil Consulting Engineering, 1150 South Depot Drive, Suite 225, Ogden, Utah 84404, 801-775-9191. Bid documents will be available online at https://www.northogdencity.com/

BID SECURITY: Each bid shall be accompanied by a certified check, cashier's check or bid bond in the amount of five percent of the total bid price, made payable to North Ogden City Corporation as guarantee that the bidder, if his bid is accepted, will promptly execute the Contract, secure payment of Worker's Compensation insurance and furnish a satisfactory, faithful performance bond in the amount of one hundred percent of the contract price and a payment bond in the amount of one hundred percent of the contract price.

PROJECT ADMINISTRATION: All questions relative to this project prior to opening of bids shall be directed to the Engineer. No specification interpretations will be made by telephone, nor will any "or equal" products be considered for approval prior to award of contract.

OWNER'S RIGHTS RESERVED: North Ogden City Corporation reserves the right to reject any or all bids, to waive any informalities in a bid, and to make awards in the interest of the City.If North Ogden City awards the contract for the Work, such award shall be to the responsible Bidder based on the "Choosing by Advantages" (CBA) decision making evaluation.

Dated: September 23, 2021 Published: September 23 and September 30, 2021

By:

North Ogden City Engineer
Lorin Gardner

SECTION 1-B

INSTRUCTIONS TO BIDDERS

WASATCH CIVIL

Consulting Engineering

Instructions To Bidders

ARTICLE 1 - DEFINED TERMS

1.01 Terms used in these Instructions to Bidders will have the meanings indicated in the General Conditions and Supplementary Conditions. Additional terms used in these Instructions to Bidders have the meanings indicated below which are applicable to both the singular and plural thereof:

A. Bidder--The individual or entity who submits a Bid directly to OWNER.

B. Issuing Office--The office from which the Bidding Documents are to be issued and where the bidding procedures are to be administered.

C. Successful Bidder-- If Owner awards the contract for the Work, such award shall be to the responsible Bidder based on the “Choosing by Advantages” (CBA) decision making evaluation.

ARTICLE 2- COPIES OF BIDDING DOCUMENTS

2.01 Complete sets of the Bidding Documents in the number and for the non-refundable deposit sum, stated in the Advertisement for Bid may be obtained from the Issuing Office.

2.02 Complete sets of Bidding Documents must be used in preparing Bids; neither OWNER nor ENGINEER assumes any responsibility for errors or misinterpretations resulting from the use of incomplete sets of Bidding Documents.

2.03 OWNER and ENGINEER in making copies of Bidding Documents available on the above terms do so only for the purpose of obtaining Bids for the Work and do not confer a license or grant for any other use.

ARTICLE 3- QUALIFICATIONS OF BIDDERS

3.01 To demonstrate Bidder's qualifications to perform the Work, OWNER may request, Bidder to submit written evidence such as financial data, previous experience, present commitments, and such other data as may be called for.

ARTICLE 4- EXAMINATION OF BIDDING DOCUMENTS, OTHER RELATED DATA, AND SITE

4.01 Subsurface and Physical Conditions

A. soils report has not been compiled for the proposed site. Soil conditions have not been assessed. All excavations will be in un-classified soil. Contractor shall be responsible to perform excavation work in wet conditions, if encountered. Tracked equipment may be required for all excavation. Bid amounts will not be altered due to wet conditions.

4.02 Underground Facilities

A. information and data shown or indicated in the Bidding Documents with respect to existing Underground Facilities at or contiguous to the Site is based upon information and data furnished to OWNER and ENGINEER by owners of such Underground Facilities, including OWNER, or others. Existing natural gas, power, telephone, water, sewer, secondary water and cable TV have not been indicated on the drawings. Contractor shall have site blue-staked prior to excavation. Appropriate plan revision, (if needed) must be coordinated with the project engineer prior to commencement of construction activities..

4.03 Hazardous Environmental Condition - N/A

4.04 Provisions concerning responsibilities for the adequacy of data furnished to prospective Bidders with respect to subsurface conditions, other physical conditions and Underground Facilities, and possible changes in the Bidding Documents due to differing or unanticipated conditions appear in paragraphs 4.02, 4.03, and 4.04 of the General Conditions. Provisions concerning responsibilities for the adequacy of data furnished to prospective Bidders with respect to a Hazardous Environmental Condition at the Site, if any, and possible changes in the Contract Documents due to any Hazardous Environmental Condition uncovered or revealed at the Site which was not shown or indicated in the Drawings or Specifications or identified in the Contract Documents to be within the scope of the Work appear in paragraph 4.06 of the General Conditions.

4.05 On request, OWNER will provide Bidder access to the Site to conduct such examinations, investigations, explorations, tests, and studies as Bidder deems necessary for submission of a Bid. Bidder shall fill all holes and clean up and restore the Site to its former condition upon completion of such explorations, investigations, tests, and studies.

4.06 Reference is made to Article 7 of the Supplementary Conditions for the identification of the general nature of other work that is to be performed at the Site by OWNER or others (such as utilities and other prime contractors) that relates to the Work for which a Bid is to be submitted. On request, OWNER will provide to each Bidder for examination access to or copies of Contract Documents (other than portions thereof related to price) for such other work.

4.07 It is the responsibility of each Bidder before submitting a Bid to:

A. examine and carefully study the Bidding Documents, including any Addenda and the other related data identified in the Bidding Documents;

B. visit the Site and become familiar with and satisfy Bidder as to the general, local, and Site conditions that may affect cost, progress, and performance of the Work;

C. become familiar with and satisfy Bidder as to all federal, state, and local Laws and Regulations that may affect cost, progress, or performance of the Work;

D. carefully study all reports of explorations and tests of subsurface conditions at or contiguous to the Site and all drawings of physical conditions in or relating to existing surface or subsurface structures at or contiguous to the Site (except Underground Facilities) which have been identified in the Supplementary Conditions as provided in paragraph 4.02 of the General Conditions, and carefully study all reports and drawings of a Hazardous Environmental Condition, if any, at the Site which have been identified in the Supplementary Conditions as provided in paragraph 4.06 of the General Conditions;

E. obtain and carefully study (or assume responsibility for doing so) all additional or supplementary examinations, investigations, explorations, tests, studies, and data concerning conditions (surface, subsurface, and Underground Facilities) at or contiguous to the Site which may affect cost, progress, or performance of the Work or which relate to any aspect of the means, methods, techniques, sequences, and procedures of construction to be employed by Bidder, including any specific means, methods, techniques, sequences, and procedures of construction expressly required by the Bidding Documents, and safety

precautions and programs incident thereto;

F. agree at the time of submitting its Bid that no further examinations, investigations, explorations, tests, studies, or data are necessary for the determination of its Bid for performance of the Work at the price bid and within the times and in accordance with the other terms and conditions of the Bidding Documents;

G. become aware of the general nature of the work to be performed by OWNER and others at the Site that relates to the Work as indicated in the Bidding Documents;

H. correlate the information known to Bidder, information and observations obtained from visits to the Site, reports and drawings identified in the Bidding Documents, and all additional examinations, investigations, explorations, tests, studies, and data with the Bidding Documents;

I. promptly give ENGINEER written notice of all conflicts, errors, ambiguities, or discrepancies that Bidder discovers in the Bidding Documents and confirm that the written resolution thereof by ENGINEER is acceptable to Bidder; and

J. determine that the Bidding Documents are generally sufficient to indicate and convey understanding of all terms and conditions for the performance of the Work.

4.08 The submission of a Bid will constitute an incontrovertible representation by Bidder that Bidder has complied with every requirement of this Article 4, that without exception the Bid is premised upon performing and furnishing the Work required by the Bidding Documents and applying any specific means, methods, techniques, sequences, and procedures of construction that may be shown or indicated or expressly required by the Bidding Documents, that Bidder has given ENGINEER written notice of all conflicts, errors, ambiguities, and discrepancies that Bidder has discovered in the Bidding Documents and the written resolutions thereof by ENGINEER are acceptable to Bidder, and that the Bidding Documents are generally sufficient to indicate and convey understanding of all terms and conditions for performing and furnishing the Work.

ARTICLE 5- PRE-BID CONFERENCE

5.01 At the bidder's request, a pre-bid conference may be held at the office of the OWNER to discuss details of the Project. Provided the meeting is requested at least 2 days prior to bid opening.

ARTICLE 6- SITE AND OTHER AREAS

6.01 The Site is identified in the Bidding Documents. All additional lands and access thereto required for temporary construction facilities, construction equipment, or storage of materials and equipment to be incorporated in the Work are to be obtained and paid for by CONTRACTOR. Easements for permanent structures or permanent changes in existing facilities are to be obtained and paid for by OWNER unless otherwise provided in the Bidding Documents.

ARTICLE 7- INTERPRETATIONS AND ADDENDA

7.01 All questions about the meaning or intent of the Bidding Documents are to be submitted to ENGINEER in writing. Interpretations or clarifications considered necessary by ENGINEER in response to such questions will be issued by Addenda mailed or delivered to all parties recorded by ENGINEER as having received the Bidding Documents. Questions received less than ten days prior to the date for opening of Bids may not be answered. Only questions answered by Addenda will be binding. Oral and other interpretations or clarifications will be without legal effect.

7.02 Addenda may be issued to clarify, correct, or change the Bidding Documents as deemed advisable by OWNER or ENGINEER.

ARTICLE 8- BID SECURITY

8.01 A Bid must be accompanied by Bid security made payable to OWNER in an amount of 5% of Bidder's maximum Bid price and in the form of a certified or bank check or a Bid Bond issued by a surety meeting the requirements of paragraphs 5.01 and 5.02 of the General Conditions.

8.02 The Bid security of the Successful Bidder will be retained until such Bidder has executed the Contract Documents, furnished the required contract security and met the other conditions of the Notice of Award, whereupon the Bid security will be returned. If the Successful Bidder fails to execute and deliver the Contract Documents and furnish the required contract security within 10 days after the Notice of Award, OWNER may annul the Notice of Award and the Bid security of that Bidder will be forfeited. The Bid security of other Bidders whom OWNER believes to have a reasonable chance of receiving the award may be retained by OWNER until the earlier of seven days after the Effective Date of the Agreement or 61 days after the Bid opening, whereupon Bid security furnished by such Bidders will be returned.

8.03 Bid security of other Bidders whom OWNER believes do not have a reasonable chance of receiving the award will be returned within seven days after the Bid opening.

ARTICLE 9- CONTRACT TIMES

9.01 The number of days within which, or the dates by which, the Work is to be completed and ready for final payment are set forth in the Agreement.

ARTICLE 10- LIQUIDATED DAMAGES

10.01 Provisions for liquidated damages, if any, are set forth in the Agreement.

ARTICLE 11 - SUBSTITUTE AND "OR-EQUAL" ITEMS

11.01 The Contract, if awarded, will be on the basis of materials and equipment specified or described in the Bidding Documents, or those substitute or "or-equal" materials and equipment approved by ENGINEER and identified by Addendum. The materials and equipment described in the Bidding Documents establish a standard of required type, function and quality to be met by any proposed substitute or "or-equal" item. No item of material or equipment will be considered by ENGINEER as a substitute or "or-equal" unless written request for approval has been submitted by Bidder and has been received by ENGINEER at least 15 days prior to the date for receipt of Bids. Each such request shall conform to requirements of paragraph 6.05 of the General Conditions. The burden of proof of the merit of the proposed item is upon Bidder. ENGINEER's decision of approval or disapproval of a proposed item will be final. If ENGINEER approves any proposed item, such approval will be set forth in an Addendum issued to all prospective Bidders. Bidders shall not rely upon approvals made in any other manner.

ARTICLE 12- SUBCONTRACTORS, SUPPLIERS, AND OTHERS

12.01 If the Supplementary Conditions require the identity of certain Subcontractors, Suppliers, individuals, or entities to be submitted to OWNER in advance of a specified date prior to the Effective Date of the Agreement, the apparent Successful Bidder, and any other Bidder so requested, shall within five days after Bid opening, submit to OWNER a list of all such Subcontractors, Suppliers, individuals, or entities proposed for those portions of the Work for which such identification is required. Such list shall be accompanied by an experience statement with pertinent information regarding similar projects and other evidence of qualification for each such Subcontractor, Supplier, individual, or entity if requested by OWNER. If OWNER or ENGINEER, after due investigation, has reasonable objection to any proposed Subcontractor, Supplier, individual, or entity, OWNER may, before the Notice of Award is given, request apparent Successful Bidder to submit a substitute, without an increase in the Bid.

12.02 If apparent Successful Bidder declines to make any such substitution, OWNER may award the Contract to the next lowest Bidder that proposes to use acceptable Subcontractors, Suppliers, individuals, or entities. Declining to make requested substitutions will not constitute grounds for forfeiture of the Bid security of any Bidder. Any Subcontractor, Supplier, individual, or entity so listed and against which OWNER or ENGINEER makes no written objection prior to the giving of the Notice of Award will be deemed acceptable to OWNER and ENGINEER subject to revocation of such acceptance after the Effective Date of the Agreement as provided in paragraph 6.06 of the General Conditions.

12.03 CONTRACTOR shall not be required to employ any Subcontractor, Supplier, individual, or entity against whom CONTRACTOR has reasonable objection.

ARTICLE 13 - PREPARATION OF BID

13.01 The Bid form is included with the Bidding Documents. Additional copies may be obtained from ENGINEER.

13.02 All blanks on the Bid form shall be completed by printing in ink or by typewriter and the Bid signed. A Bid price shall be indicated for each section, bid item, alternative, and unit price item listed therein, or the words "No Bid," "No Change," or "Not Applicable" entered.

13.03 A Bid by a corporation shall be executed in the corporate name by the president or a vice-president or other corporate officer accompanied by evidence of authority to sign. The corporate seal shall be affixed and attested by the secretary or an assistant secretary. The corporate address and state of incorporation shall be shown below the signature.
1.
13.04 A Bid by a partnership shall be executed in the partnership name and signed by a partner (whose title must appear under the signature), accompanied by evidence of authority to sign. The official address of the partnership shall be shown below the signature.

13.05 A Bid by a limited liability company shall be executed in the name of the firm by a member and accompanied by evidence of authority to sign. The state of formation of the firm and the official address of the firm must be shown below the signature.

13.06 A Bid by an individual shall show the Bidder's name and official address.

13.07 A Bid by a joint venture shall be executed by each joint venturer in the manner indicated on the Bid form. The official address of the joint venture must be shown below the signature.

13.08 All names shall be typed or printed in ink below the signatures.

13.09 The Bid shall contain an acknowledgment of receipt of all Addenda, the numbers of which shall be filled in on the Bid form.

13.10 The address and telephone number for communications regarding the Bid shall be shown.

13.11 The Bid shall contain evidence of Bidder's authority and qualification to do business in the state where the Project is located or covenant to obtain such qualification prior to award of the Contract. Bidder's state contractor license number for the state of the Project, if any, shall also be shown on the Bid form.

ARTICLE 14- BASIS OF BID; EVALUATION OF BIDS

14.01 Unit Price

A. Bidders shall submit a Bid on a unit price basis for each item of Work listed in the Bid schedule.

B. The total of all estimated prices will be determined as the sum of the products of the estimated quantity of each item and the unit price Bid for the item. The final quantities and Contract Price will be determined in accordance with paragraph 11.03 of the General Conditions.

C. Discrepancies between the multiplication of units of Work and unit prices will be resolved in favor of the unit prices. Discrepancies between the indicated sum of any column of figures and the correct sum thereof will be resolved in favor of the correct sum. Discrepancies between words and figures will be resolved in favor of the words.

14.02 The Bid price shall include such amounts as the Bidder deems proper for overhead and profit on account of cash allowances, if any, named in the Contract Documents as provided in paragraph 11.02 of the General Conditions.

ARTICLE 15- SUBMITTAL OF BID

15.01 Each prospective Bidder is furnished one copy of the Bidding and Contract Documents. The Bid form is to be completed and submitted with the Bid security.

15.02 A Bid shall be submitted no later than the date and time prescribed and at the place indicated in the Advertisement for Bid and shall be enclosed in an opaque sealed envelope plainly marked with the Project title, the name and address of Bidder, and shall be accompanied by the Bid security and other required documents. If a Bid is sent by mail or other delivery system, the sealed envelope containing the Bid shall be enclosed in a separate envelope plainly marked on the outside with the notation "BID ENCLOSED."

ARTICLE 16- MODIFICATION AND WITHDRAWAL OF BID

16.01 A Bid may be modified or withdrawn by an appropriate document duly executed in the manner that a Bid must be executed and delivered to the place where Bids are to be submitted prior to the date and time for the opening of Bids.

16.02 If within 24 hours after Bids are opened any Bidder files a duly signed written notice with OWNER and promptly thereafter demonstrates to the reasonable satisfaction of OWNER that there was a material and substantial mistake in the preparation of its Bid, that Bidder may withdraw its Bid, and the Bid security will be returned. Thereafter, if the Work is rebid, that Bidder will be disqualified from further bidding on the Work.

ARTICLE 17- OPENING OF BIDS

17.01 Bids will be opened at the time and place indicated in the Advertisement for Bid and, unless obviously non-responsive, read aloud publicly. An abstract of the amounts of the base Bids and major alternates, if any, will be made available to Bidders after the opening of Bids.

ARTICLE 18- BIDS TO REMAIN SUBJECT TO ACCEPTANCE

18.01 All Bids will remain subject to acceptance for the period of time stated in the Bid form, but OWNER may, in its sole discretion, release any Bid and return the Bid security prior to the end of this period.

ARTICLE 19- AWARD OF CONTRACT

19.01 OWNER reserves the right to reject any or all Bids, including without limitation, nonconforming, non-responsive, unbalanced, or conditional Bids. OWNER further reserves the right to reject the Bid of any Bidder whom it finds, after reasonable inquiry and evaluation, to be non-responsible. OWNER may also reject the Bid of any Bidder if OWNER believes that it would not be in the best interest of the Project to make an award to that Bidder. OWNER also reserves the right to waive all informalities not involving price, time, or changes in the Work and to negotiate contract terms with the Successful Bidder.

19.02 More than one Bid for the same Work from an individual or entity under the same or different names will not be considered. Reasonable grounds for believing that any Bidder has an interest in more than one Bid for the Work may be cause for disqualification of that Bidder and the rejection of all Bids in which that Bidder has an interest.

19.03 In evaluating Bids, OWNER will consider whether or not the Bids comply with the prescribed requirements, and such alternates, unit prices and other data, as may be requested in the Bid Form or prior to the Notice of Award.

19.04 In evaluating Bidders, OWNER may consider the qualifications of Bidders and may consider the qualifications and experience of Subcontractors, Suppliers, and other individuals or entities proposed for those portions of the Work for which the identity of Subcontractors, Suppliers, and other individuals or entities must be submitted as provided in the Supplementary Conditions.

19.05 OWNER may conduct such investigations as OWNER deems necessary' to establish the responsibility, qualifications, and financial ability of Bidders, proposed Subcontractors, Suppliers, individuals, or entities to perform the Work in accordance with the Contract Documents.

19.06 After a review of responsible bidders, the Owner will conduct the "Choosing by Advantages" (CBA) decision making evaluation. Choosing by Advantages "CBA" is the process adopted by the Owner to aid in awarding contracts. CBA is based on the fundamental rule of decision making that "Decision must be based on the importance of advantages" An advantage is defined as a positive difference between two alternatives. The advantages of a proposal are compared to the advantages found in other proposals to determine which is preferred.

CBA weighs the advantage of the preferred proposal to the additional cost when awarding contracts. Consequently, the CBA analysis may result in awarding the project to a contractor other than the low Bidder. In the evaluation, the lowest Bidder's qualifications and proposal will be compared to the other Bidder's qualifications and proposals. The project will be awarded independently of the cost when distinct

advantages in the proposal are found to be of significance by the evaluation committee. This occurs when the cost to gain the advantage is considered appropriate. Predetermined factors listed in the Choosing by Advantages Decision Making Form will govern the evaluation process and selection of the successful Bidder. Some factors may be more important than others and will carry more weight in the decision-making process.

ARTICLE 20- CONTRACT SECURITY AND INSURANCE

20.01 Article 5 of the General Conditions, as may be modified by the Supplementary' Conditions, sets forth OWNER's requirements as to performance and payment Bonds and insurance. When the Successful Bidder delivers the executed Agreement to OWNER, it must be accompanied by such Bonds.

ARTICLE 21- SIGNING OF AGREEMENT

21.01 When OWNER gives a Notice of Award to the Successful Bidder, it shall be accompanied by the required number of unsigned counterparts of the Agreement with the other Contract Documents which are identified in the Agreement as attached thereto. Within 10 days thereafter, Successful Bidder shall sign and deliver the required number of counterparts of the Agreement and attached documents to OWNER. Within ten days thereafter, OWNER shall deliver one fully signed counterpart to Successful Bidder with a complete set of the Drawings with appropriate identification.

ARTICLE 22- SALES AND USE TAXES

22.01 - N/A

ARTICLE 23- RETAINAGE

23.01 Retainage of 5% of each progress payment will be withheld until project completion and acceptance, at which time all retained monies will be released.

SECTION 1-C

BID FORM

MEASUREMENT & PAYMENT

WASATCH CIVIL

Consulting Engineering

BID FORM

DATE: 9/22/2021

400 East Waterline Project

North Ogden City Corporation

Bid Opening Date: October 7, 2021 Time: 2:00 p.m. Place: North Ogden City Office, 505 # 2600 N, North Ogden Utah 84414

To: North Ogden City Corporation,

The undersigned, having examined the proposed Contract Documents titled: **400 East Waterline Project**, and having visited the site and examined the conditions affecting the work, hereby proposes and agrees to furnish all labor, equipment, and materials and perform all operations necessary to complete work as required by said proposed Contract Documents, for that portion of the work identified in this Bid Form and for the sums stipulated below:

400 East Waterline Project

	Description	Quantity	Units	Unit Price	Amount
1	Mobilization and Traffic Control:	1	L.S.		
2	Remove Existing Asphalt:	720	S.F.		
3	Remove Existing Concrete Curb and Gutter:	80	L.F.		
4	Remove Existing Concrete Drive Approach:	1701	S.F.		
5	Remove Existing Concrete Sidewalk:	3400	S.F.		
7	Remove Existing Valve and Valve Box:	2	Each		
8	Construct Concrete Plugs at Ends of Abandoned Water Mains:	12	Each		
9	Install Owner Furnished 8" Dia. PVC C-900 DR-14 Pipe:	18	L.F.		
10	Install Owner Furnished 12" Dia. PVC C-900 DR-14 Pipe:	961	L.F.		
11	Install Owner Furnished 8" X 12" D.I. Reducer:	1	Each		
12	Install Owner Furnished 12" Thru X 8" D.I. M.J. Tee:	1	Each		

400 East Waterline Project					
	Description	**Quantity**	**Units**	**Unit Price**	**Amount**
13	Install Owner Furnished 8" D.I. Coupler:	1	Each		
14	8" D.I. Gate Valve with Valve Box & Collar:	1	Each		
15	12" D.I. Gate Valve with Valve Box & Collar:	2	Each		
16	1" Water Service:	1	Each		
17	1" Temporary Water Service:	140	L.F.		
18	Remove and Replace Existing Fire Hydrant Assembly:	3	Each		
19	Concrete Curb and Gutter:	80	L.F.		
20	Concrete Drive Approach:	1500	S.F.		
21	Concrete Sidewalk:	8400	S.F.		
22	In-line Dome Tiles (Pedestrian Ramp):	3	Each		
23	Asphalt Pavement Patching (3" HMA/ 8" UTBC):	720	S.F.		
24	Granular Backfill Borrow:	1000	Tons		
25	Landscape and Irrigation Repairs:	1	L.S.		
26	Sediment Barriers at Storm Drain Catch Basins:	6	L.S.		
SUBTOTAL OF BID ITEMS					

400 East Waterline Project					
	Description	**Quantity**	**Units**	**Unit Price**	**Amount**
Alternative Bid Items					
A1	Install Owner Furnished 12" Dia. PVC C-900 DR-14 Pipe:	385	L.F.		
A2	Remove and Replace Existing Fire Hydrant Assembly:	1	Each		
A3	Construct Concrete Plugs:	1	Each		
TOTAL OF ALTERNATIVE BID ITEMS					
TOTAL OF ALL BID ITEMS					

Bidder understands that the quantities indicated above for each item of work shall be considered approximate only. Payment will be based on actual work completed as measured in the field by the Owner's project representative. Owner reserves the right to make changes to estimated quantities to fit the available maintenance budget. Quantity changes from a 50 percent decrease to 100 percent increase may be made by the Owner without a change in unit contract price. Certain bid items may be eliminated by the owner if, during the course of work, it is deemed appropriate. Bidder is cautioned against creating unbalanced bid item pricing for the purpose of obtaining premature payments or anticipating changes to bid item quantities.

The Owner reserves the option to extend the award of this Contract for an additional year. The unit price bid amounts shall be negotiated preceding the grant of Notice of Proceed for the additional year.

The undersigned Bidder proposes and agrees, if this Bid is accepted, to enter into an Agreement with Owner in the form included in the Bidding Documents to perform all Work as specified or indicated in the Bidding Documents for the prices and within the times indicated in this Bid and in accordance with the other terms and conditions of the Bidding Documents.

Bidder accepts all of the terms and conditions of the Advertisement for Bid and the Instructions to Bidders, including without limitation those dealing with the deposition of Bid security. The Bid will remain subject to acceptance for 30 days after the Bid opening. Bidder hereby recognizes receipt of Addenda No.'s _____ appurtenant to Bid Documents.

Bid Security in the form of _____, provided by Bidder is herewith submitted.

Contractor Name: _____

Business Address:_____

_____

Phone Number: _____ Fax Number: _____

Email: _____

Signed: _____

Name of Signer: _____

Title of Signer: _____

Contractor's License Number: _____

Measurement & Payment

September 22, 2021

Bid Item 1 – Mobilization and Traffic Control:

Measurement shall be as indicated. Payment will be made according to the percentage of the total contract work completed (i.e., 50% paid when 50% of the work completed). Payment includes the following work and items:

A. Secure permits, bonds, and insurance;
B. Move equipment and personnel to and from the job site;
C. Provide traffic control plan, barricades, signs, and devices; and
D. Complete all other miscellaneous responsibilities and operations not generally attributed to any other single bid item.

Bid Item 2 –Remove Existing Asphalt:

Measurement shall be per square feet. Payment shall be full compensation for all labor, materials, and equipment necessary to remove and dispose of existing asphalt pavement. Payment includes the following work and items:

A. Remove existing asphalt pavement from the areas designated on the design drawings;
B. Sawcut edges of asphalt pavement;
C. Dispose of all asphalt and pay all disposal fees;
D. Provide dust control and cleanup; and
E. Complete all other labor, material, and equipment necessary to remove the asphalt road surface as indicated on the design drawings.

Bid Item 3 – Remove Existing Concrete Curb and Gutter:

Bid Item 4 – Remove Existing Concrete Drive Approach:

Bid Item 5 – Remove Existing Concrete Sidewalk:

Measurement shall be as indicated. Payment shall be full compensation for all the labor, equipment, and material to remove the existing feature and properly dispose of the waste materials. Payment includes the following work and items:

A. Remove and dispose of the indicated concrete and features;
B. Sawcut the edges of the concrete as indicated on the plans;
C. Load and haul the waste materials to a legal disposal or recycling facilities;
D. Pay all disposal fees and cost;
E. Protect existing utilities and other structures and features that will remain;
F. Provide dust control and cleanup; and
G. Complete all other appurtenant activities necessary to remove and dispose of the indicated items.

Bid Item 6 – Remove Existing Waterline:

Bid Item 7 – Remove Existing Valve and Valve Box:

Measurement shall be per each. Payment shall be full compensation for all labor, material, and equipment required to remove the existing features. Payment includes:

A. Identify existing waterline to be removed and receive approval from Engineer;
B. Excavate to expose the existing waterline and fittings;
C. Cut the abandoned pipeline and remove the existing features and waterline;
D. Backfill the excavation;
E. Provide legal dispose or salvage;
F. Restore all existing improvements damaged during construction; and
G. Complete all other necessary tasks to remove the indicated feature.

Bid Item 8 – Construct Concrete Plugs at Ends of Abandoned Water Mains:

Measurement shall be per each. Payment shall be full compensation for all labor, material, and equipment required to furnish and to install concrete plugs as required to seal the ends of abandoned water mains:

A. Identify existing waterline to be abandoned and receive approval from Engineer;
B. Excavate as necessary and expose the end of the pipe to be abandoned;
A. Place a concrete plug to seal the end of the pipe;
B. Place and compact granular borrow backfill to fill the excavation; and
C. Complete all other appurtenant activities necessary to complete a concrete plug.

Bid Item 9 – Install Owner Furnished 8" Dia. PVC C-900 DR-14 Pipe:

Bid Item 10 – Install Owner Furnished 12" Dia. PVC C-900 DR-14 Pipe:

Measurement shall be per lineal foot of pipe. Payment per foot of pipe shall be full compensation for all labor, material, and equipment required to install the owner furnished waterline. Payment includes the following item tasks:

A. Locate and protect existing utilities;
B. Remove asphalt and concrete material material within the area to be distributed by trenching/excavating operations;
C. Excavate the pipeline trench and remove unsuitable materials from the site;
D. Protect existing trees and minimize the impact and compaction of tree root systems;
E. Install the owner furnished waterline with pipe bedding material, joints, tracer wire, and connections;
F. Place and compact trench backfill material;
G. Complete waterline cleaning, flushing, pressure testing, and disinfection;
H. Coordinate water shut-offs, disinfection, testing, and startup with North Ogden City Personnel
I. Communicate with residents to minimize inconvenience due to temporary water shut offs and disruptions to property access; and
J. Complete all other items and operations necessary for construction of the culinary waterline.

Bid Item 11 – Install Owner Furnished 8" X 12" D.I. Reducer:

Bid Item 12 – Install Owner Furnished 12" Thru X 8" Branch D.I. Tee with Restrained Joints:

Bid Item 13 – Install Owner Furnished 8" D.I. Coupler:

Measurement shall be on a per each basis for fittings installed complete. Payment shall be full compensation for all labor, materials, and equipment to furnish & install the pipe fittings. Payment includes the following work items:

D. Install owner furnished fittings with mechanical joints unless otherwise indicated;
E. Construct thrust blocks at all bends, tees, and reducers;
F. Poly-wrap fittings with thrust blocks; and
G. Complete all other operations and provide all materials necessary to complete these items in accordance with Contract Documents and North Ogden City Standards

Bid Item 14 – 8" D.I. Gate Valve with Valve Box & Lid:

Bid Item 15 – 12" D.I. Gate Valve with Valve Box & Lid:

Measurement shall be on a per each basis for valve install complete. Payment shall be full compensation for all labor, materials, and equipment to furnish & install the valve with valve box and lid. Payment includes the following work and items:

A. Install valves with mechanical joints unless otherwise indicated;
B. Install valve box with lid;
C. Adjust the valve box to grade and construction concrete collar after asphalt restoration; and
D. Complete all other operations and provide all material necessary to complete valves in accordance with the Contract Documents and North Ogden City Standards.

Bid Item 16 – 1" Water Service:

Measurement shall be per each. Payment shall be full compensation for all labor, material, and equipment required to construct water services between the new main and existing meter box. Payment includes the following items and tasks:

A. Excavate and/or pull new services;
B. Remove existing water service pipe (copper pipe remains the property of North Ogden City);
C. Construct the water services with polyethylene pipe, service saddle, corp stop, angle valve, and connection of the polyethylene service line to the new angle valve within the existing meter box;
D. Replace ring and lid (supplied by North Ogden City);
E. Place and compact approved backfill material; and
F. Complete all other items and operations necessary for construction of the water service.

Bid Item 17 – 1" Temporary Water Service:

Measurement shall be per linear feet. Payment shall be full compensation for all labor, material, and equipment required to construct the temporary water services between the existing main and the existing meter box. Payment includes the following items and tasks:

A. Construct temporary water service (Poly Pipe, NSF 61 Certified);
B. Temporarily cut and plug the existing waterline;
C. Connect temporary service to existing waterline (Contractor to perform hot tap);
D. Remove and abandon the temporary service with a brass plug at the main after the new water service is connected to new waterline; and
E. Complete all other items and operations necessary for construction of the temporary water service.

Bid Item 18 – Remove and Replace Fire Hydrant Assembly:

Measurement shall be per each. Payment shall be full compensation for all labor, material, and equipment required to remove and replace fire hydrant assemblies as shown in the Design Drawing details. Payment includes the following tasks and items:

A. Excavate the pipeline trench and remove unsuitable materials from the site;
B. Expose the existing waterline and fittings;
C. Cut the abandoned pipeline and remove the existing feature;
D. Provide legal dispose or salvage (see note);
E. Construct fire hydrant assemblies with a main-line tee, valve, 6" dia. pipe, joint assemblies, pipe bedding, hydrant, and all fittings required to connect the hydrant to the mainline;
F. Place and compact backfill material;
G. Polywrap all fittings to be restrained by thrust blocks;
H. Construct thrust blocks;
I. Install tracer wire, including connections to all hydrants;
J. Remove and replace curb & gutter and landscaping as necessary to install the hydrant in the park strip (tunneling beneath the curb will not be allowed); and
K. Complete all other items and operations necessary for construction of fire hydrant assemblies.

Bid Item 19 – Concrete Curb and Gutter:

Bid Item 20 – 6" Thick Concrete Drive Approach:

Bid Item 21 – 4" Thick Concrete Sidewalk:

Measurement shall be per lineal foot. Payment shall be full compensation for all labor, material, and equipment to provide the work specified and includes:

A. Locate and protect existing utilities;
B. Saw-cutting;
C. Disposal of concrete and all other excess materials;
D. Placement and compaction of 8" of untreated base course under curb and drive approaches, and 4" of untreated base under sidewalk;
E. Concrete, forming, placement, reinforcing, scoring, finishing, curing, sealing;
F. Dust control
G. Coordination to reduce inconvenience to residents;
H. Clean-up; and
I. All other appurtenant activities and devices necessary to provide the above listed items complete.

Bid Item 22 – In-line Tiles Domes (Pedestrian Ramp):

Measurement shall be per each. Payment shall be full compensation for all labor, materials, and equipment to furnish and install the in-line dome tiles for the pedestrian access ramps and safety islands. Payment includes the following work and items:

A. Install composite in-line dome tiles (full width of curb cut/depression);
B. Complete all other work necessary for the construction of this item.

Bid Item 23 – Asphalt Pavement Patching (3" HMA/ 8" UTBC):

Measurement and payment shall be per square feet as measured at the finished surface. Payment shall be full compensation for all the labor, equipment, and materials to furnish and to install the structural pavement section. Payment includes the following work and items:

A. Place and compact Untreated Base Course (UTBC) to the design thickness as indicated on the design drawings for structural pavement.
B. Grade the UTBC surface to design grades (see notes);
C. Sawcut the edge of asphalt to achieve a smooth, clean edge;
D. Apply tack coat;
E. Place and compact hot mix asphalt (HMA) to the design thickness as indicated in the structural pavement details;
F. Provide dust control and daily cleanup; and
G. Complete all other items and operations necessary for restoration of asphalt pavement.

Note: The thickness of UTBC refers to the finished thickness. At most locations an additional 3 inches thickness of UTBC will be required to temporarily match existing pavement and allow traffic over the trench. Remove extra UTBC and grade to 3 inches below the finished surface prior to paving with hot mix asphalt. Payment shall include placement and removal of temporary UTBC.

Bid Item 24 – Granular Backfill Borrow:

Measurement shall be per ton as measured from weigh tickets. Weight tickets must include date, time, material type, source, destination, loaded weight, empty weight and tare weight. Payment shall be full compensation for all labor, materials, and equipment necessary to furnish and install import backfill material. Payment includes the following work and items:

A. Coordinate with the Engineer to determine where import is required;
B. Remove and dispose unsuitable soils; and
C. Provide approved granular backfill borrow.

Note: Payment for granular backfill borrow should include only the additional costs for supplying import backfill. Compaction costs and use of native soils for backfill should be included with the pipe or the related item.

Bid Item 25 – Landscape and Irrigation Repairs:

Measurement shall be per lump sum. Payment shall be full compensation for all labor, material, and equipment required to restore landscaping and irrigation system. Payment shall include the following work and items:

A. Repair existing sprinklers where affected by construction activities;
B. Remove affected shrubs;
C. Replace top soil & sod;
D. Adjust street signage to grade; and
E. Complete all other items and work as required for landscaping and irrigation systems installation.

Bid Item 26 – Sediment Barriers at Storm Drain Catch Basins:

Measurement shall be per each. Payment shall be full compensation for all labor, material, and equipment required to install and maintain the sediment barriers as necessary to minimize sediment entering the storm drainage system. Payment includes the following tasks and items:

A. Install sediment barriers at all catch basin inlets within the project limits and the catch basin inlet imediately downstream of the project;
B. Inspect and clean barriers at intervals as required to maintain proper function of the barrier;
C. Remove barriers upon project completion; and
D. Complete all other items and operations necessary to maintain sediment barriers.

Alternative Bid Items

Bid Item A1– Install Owner Furnished 12" Dia. PVC C-900 DR-14 Pipe:

Measurement shall be per lineal foot of pipe. Payment per foot of pipe shall be full compensation for all labor, material, and equipment required to install the owner furnished waterline. Payment includes the following item tasks:

A. Locate and protect existing utilities;
B. Remove asphalt material within the area to be distributed by trenching/excavating operations;
C. Excavate the pipeline trench and remove unsuitable materials from the site;
D. Install the owner furnished waterline with pipe bedding material, joints, tracer wire, and connections;
E. Place and compact trench backfill material;
F. Complete waterline cleaning, flushing, pressure testing, and disinfection;
G. Coordinate water shut-offs, disinfection, testing, and startup with North Ogden City Personnel
H. Communicate with residents to minimize inconvenience due to temporary water shut offs and disruptions to property access; and
I. Complete all other items and operations necessary for construction of the culinary waterline.

Bid Item A2 – Remove and Replace Fire Hydrant Assembly:

Measurement shall be per each. Payment shall be full compensation for all labor, material, and equipment required to remove and replace fire hydrant assemblies as shown in the Design Drawing details. Payment includes the following tasks and items:

A. Excavate the pipeline trench and remove unsuitable materials from the site;
B. Expose the existing waterline and fittings;
C. Cut the abandoned pipeline and remove the existing feature;
D. Provide legal dispose or salvage (see note);
E. Construct fire hydrant assemblies with a main-line tee, valve, 6" dia. pipe, joint assemblies, pipe bedding, hydrant, and all fittings required to connect the hydrant to the mainline;
F. Place and compact backfill material;
G. Polywrap all fittings to be restrained by thrust blocks;
H. Construct thrust blocks;
I. Install tracer wire, including connections to all hydrants;
J. Remove and replace curb & gutter and landscaping as necessary to install the hydrant in the park strip (tunneling beneath the curb will not be allowed); and
K. Complete all other items and operations necessary for construction of fire hydrant assemblies.

Bid Item A3–Construct Concrete Plugs:

Measurement shall be per each. Payment shall be full compensation for all labor, material, and equipment required to furnish and to install concrete plugs as required to seal the ends of abandoned water mains:

A. Excavate as necessary and expose the end of the pipe to be abandoned;
B. Place a concrete plug to seal the end of the pipe;
C. Place and compact granular borrow backfill to fill the excavation; and
D. Complete all other appurtenant activities necessary to complete a concrete plug.

SECTION 1-D

CHOOSING BY ADVANTAGES SYSTEM OF DECISION MAKING

WASATCH CIVIL
Consulting Engineering

CHOOSING BY ADVANTAGES SYSTEM OF DECISION MAKING (CBA)

The “Choosing By Advantages System of Decision Making” (CBA) is the process adopted by the Owner to aid in awarding contracts. CBA is based on the fundamental rule of decision making that “Decisions must be based on the importance of advantages.” An advantage is defined as a positive difference between two alternatives. The advantages of a proposal are compared to the advantages found in other proposals to determine which is preferred. CBA weighs the advantages of the preferred proposal to the additional cost when awarding contracts. Consequently, the CBA analysis may result in awarding the project to a contractor other than the low bidder.

The factors that will be used in the evaluation of proposals are listed on the following pages. For each factor, the Owner will evaluate the advantage found in each proposal. Some factors may be more important than others and will carry more weight in the decision-making process.

The following table lists each factor. Bidders will supply the information requested in each factor, and the Owner will determine the respective advantages as noted above.

CHOOSING BY ADVANTAGES

NORTH OGDEN CITY: CONTRACTOR:

400 East Waterline Project _____

_____

The contractor will be selected by a committee appointed by the City using the "Choosing by Advantages" Decision Making Process. The Contractor must provide information for each of the following factors that will be used in the decision-making process.

Factor	Description
(1)	Number of years experience as a general contractor (10 Points):
(2)	List of projects of similar size and scope completed within the past 10-years (15 Points):

Factor	Description
(3)	List of key personnel with their qualifications and experience assigned to this project (10 Points):
(4)	Methods, materials, materials suppliers, and sub-contractors (10 Points):
(5)	List of projects completed in North Ogden City within the last 15 years (5 Points): *

Factor	Description
(6) References (5 Points):	
(7) Cost (45 Points):	

* Previous work experience with North Ogden City is not a requirement. Projects listed in this section will help the City determine if past work with North Ogden City has been deemed successful. Projects will be considered successful if they have been completed in a timely manner, in a spirit of cooperation, with minimal contractor generated change orders, with professionalism, having achieved project objectives and other positive outcomes as noted by the review committee.

END

SECTION II

CONTRACT DOCUMENTS

WASATCH CIVIL

Consulting Engineering

SECTION II-A

CONTRACT AGREEMENT

WASATCH CIVIL

Consulting Engineering

CONTRACT AGREEMENT

THIS AGREEMENT is by and between **NORTH OGDEN CITY CORPORATION** (hereinafter called OWNER) and _____(hereinafter called CONTRACTOR).

OWNER and CONTRACTOR, in consideration of the mutual covenants hereinafter set forth, agree as follows:

ARTICLE 1- WORK

1.01 CONTRACTOR shall complete all Work as specified or indicated in the Contract Documents. The Work is generally described as follows:

> The work consists of the construction of a 12" Waterline along 400 East. The specific work items include installing approximately 980 linear feet of 12" culinary waterline, and approximately 10,000 square feet of concrete sidewalk and driveways as indicated in the Contract Documents.

ARTICLE 2-THE PROJECT

2.01 The Project for which the Work under the Contract Documents may be the whole or only a part is generally described as follows:

400 East Waterline Project

ARTICLE 3- ENGINEER

3.01 The Project has been designed by Wasatch Civil Consulting Engineering, who is hereinafter called ENGINEER and who is to act as OWNER's representative, assume all duties and responsibilities, and have the rights and authority assigned to ENGINEER in the Contract Documents in connection with the completion of the Work in accordance with the Contract Documents.

ARTICLE 4- CONTRACT TIMES

4.01 *Time of the Essence:* All time limits for completion and readiness for final payment as stated in the Contract Documents are of the essence of the Contract.

4.02 *Dates for Completion and Final Payment*: The Work will be completed within **30** working days following Notice to Proceed. Project can be scheduled as a Fall 2021 project or an early Spring 2022 project.

4.03 *Liquidated Damages:* CONTRACTOR and OWNER recognize that time is of the essence of this Agreement and that OWNER will suffer financial loss if the Work is not completed within the times specified in paragraph 4.02 above, plus any extensions thereof allowed in accordance with Article 12 of the General Conditions. The parties also recognize the delays, expense, and difficulties involved in proving in a legal or arbitration proceeding the actual loss suffered by OWNER if the Work is not completed on time. Accordingly, instead of requiring any such proof,

OWNER and CONTRACTOR agree that as liquidated damages for delay (but not as a penalty), CONTRACTOR shall pay OWNER $500.00 for each day that expires after the time specified in paragraph 4.02 for Completion until the Work is accepted.

ARTICLE 5- CONTRACT PRICE

5.01 OWNER shall pay CONTRACTOR for completion of the Work in accordance with the Contract

Documents an amount in current funds equal to the sum of the amounts determined pursuant to the paragraph below:

For all Unit Price Work, an amount equal to the sum of the established unit price for each separately identified item of Unit Price Work times the actual quantity of that item as measured in the field.

UNIT PRICE WORK

No.	Item	Quantity	Unit	Unit Price	Amount

TOTAL OF ALL UNIT PRICES _____ (_____)

As provided in paragraph 11.03 of the General Conditions, estimated quantities are not guaranteed, and determinations of actual quantities and classifications are to be made by ENGINEER as provided in paragraph 9.08 of the General Conditions. Unit prices have been computed as provided in paragraph 11.03 of the General Conditions.

ARTICLE 6- PAYMENT PROCEDURES

6.01 *Submittal and Processing of Payments:* CONTRACTOR shall submit Applications for Payment in accordance with Article 14 of the General Conditions. Applications for Payment will be processed by ENGINEER as provided in the General Conditions.

6.02 *Progress Payments; Retainage:* OWNER shall make progress payments on account of the Contract Price on the basis of CONTRACTOR's Applications for Payment on or about the 5th day of each month during performance of the Work as provided in paragraphs 6.02.A. 1 and 6.02.A.2 below. All such payments will be measured by the schedule of values established in paragraph 2.07.A of the General Conditions (and in the case of Unit Price Work, based on the number of units completed) or, in the event there is no schedule of values, as provided in the General Requirements:

1. Prior to Completion, progress payments will be made in an amount equal to the percentage indicated below but, in each case, less the aggregate of payments previously made and less such amounts as ENGINEER may determine or OWNER may withhold, in accordance with paragraph 14.02 of the General Conditions:

A. 95% of Work completed (with the balance being retained). If the Work has been 50% completed as determined by ENGINEER, and if the character and progress of the Work have been satisfactory to OWNER and ENGINEER, OWNER, on recommendation of ENGINEER, may determine that as long as the character and progress of the Work remain satisfactory to them, there will be no retainage on account of Work subsequently completed, in which case the remaining progress payments prior to Substantial Completion will be in an amount equal to 100% of the Work completed less the aggregate of payments previously made; and

B. 25% of cost of materials and equipment not incorporated in the Work (with the balance being retained).

2. Upon Completion, OWNER shall pay an amount sufficient to increase total payments to CONTRACTOR to 100% of the Work completed, less such amounts as ENGINEER shall determine in accordance with paragraph 14.02.B.5 of the General Conditions.

6.03 *Final Payment:* Upon final completion and acceptance of the Work in accordance with paragraph 14.07 of the General Conditions, OWNER shall pay the remainder of the Contract Price as recommended by ENGINEER as provided in said paragraph 14.07.

ARTICLE 7- INTEREST

7.01 All moneys not paid when due as provided in Article 14 of the General Conditions shall bear interest at the rate of **0%** per annum.

ARTICLE 8- CONTRACTOR'S REPRESENTATIONS

8.01 In order to induce OWNER to enter into this Agreement CONTRACTOR makes the following representations:

A. CONTRACTOR has examined and carefully studied the Contract Documents and the other related data identified in the Bidding Documents.

B. CONTRACTOR has visited the Site and become familiar with and is satisfied as to the general, local, and Site conditions that may affect cost, progress, and performance of the Work.

C. CONTRACTOR is familiar with and is satisfied as to all federal, state, and local Laws and Regulations that may affect cost, progress, and performance of the Work.

D. CONTRACTOR has carefully studied all: (1) reports of explorations and tests of subsurface conditions at or contiguous to the Site and all drawings of physical conditions in or relating to existing surface or subsurface structures at or contiguous to the Site (except Underground Facilities) which have been identified in the Supplementary Conditions as provided in paragraph 4.02 of the General Conditions and (2) reports and drawings of a Hazardous Environmental Condition, if any, at the Site which has been identified in the Supplementary Conditions as provided in paragraph 4.06 of the General Conditions.

E. CONTRACTOR has obtained and carefully studied (or assumes responsibility for having done so) all additional or supplementary examinations, investigations, explorations, tests, studies, and data concerning conditions (surface, subsurface, and Underground Facilities) at or contiguous to the Site which may affect cost, progress, or performance of the Work or which relate to any aspect of the means, methods, techniques, sequences, and procedures of construction to be employed by CONTRACTOR, including applying the specific means, methods, techniques, sequences, and procedures of construction, if any, expressly required by the Contract Documents to be employed by CONTRACTOR, and safety precautions and programs incident thereto

F. CONTRACTOR does not consider that any further examinations, investigations, explorations, tests, studies, or data are necessary for the performance of the Work at the Contract Price, within the Contract Times, and in accordance with the other terms and conditions of the Contract Documents.

G. CONTRACTOR is aware of the general nature of work to be performed by OWNER and others at the Site that relates to the Work as indicated in the Contract Documents.

H. CONTRACTOR has correlated the information known to CONTRACTOR, information and observations obtained from visits to the Site, reports and drawings identified in the Contract Documents, and all additional examinations, investigations, explorations, tests, studies, and data with the Contract Documents.

I. CONTRACTOR has given ENGINEER written notice of all conflicts, errors, ambiguities, or discrepancies that CONTRACTOR has discovered in the Contract Documents, and the written resolution thereof by ENGINEER is acceptable to CONTRACTOR.

J. The Contract Documents are generally sufficient to indicate and convey understanding of all terms and conditions for performance and furnishing of the Work.

K. The Work to be performed under this Contract is on a project assisted under a program providing direct Federal financial assistance from the Department of Housing and Urban Development and is subject to the requirements of Section 3 of the Housing and Urban Development Act of 1968, as amended, 12 U.S.C. 1701u. Section 3 requires to the greatest extent feasible opportunities for training and employment be given to lower income residents of the project area and contracts for work in connection with the project will be awarded to

business concerns which are located in, or owned in substantial part by persons residing in the area of the project.

L. The parties to this Contract will comply with the provision of said Section 3 and the regulations issued pursuant thereto by the Secretary of Housing and Urban Development set for in 24 CFR, and all applicable rules and orders of the Department issued prior to the execution of the Contract. The parties to this Contract certify and agree that they are under no contractual or other disability that would prevent them from complying with these requirements.

M. The CONTRACTOR will send to each labor organization or representative of workers with which he has a collective bargaining agreement or other Contract or understanding, if any, a notice advising the said labor organizations or workers' representative of his commitments under this Section 3 clause and shall post copies of the notice in conspicuous places available to employees and applicants for employment or training.

N. The CONTRACTOR will include this Section 3 clause in every subcontract for Work in connection with the project and will, at the direction of the applicant for or recipient of Federal financial assistance, take appropriate action pursuant to the subcontract upon finding that the subcontractor is in violation of regulations issued by the Secretary of Housing and Urban Development, 24 CFR. The CONTRACTOR will not subcontract with any subcontractor where it has notice or knowledge that the latter has been found in violation of regulations under 24 CFR — and will not let any subcontract unless the subcontractor has first provided it with a preliminary statement of ability to comply with the requirements of these regulations.

O. Compliance with the provisions of Section 3, the regulations set forth in 24 CFR, and all applicable rules and orders of the Department issued there under prior to the execution of the Contract, shall be the execution of the Contract, shall be a condition of the Federal finance assistance provided to the project, binding upon the applicant or recipient for such assistance, its successors, and assigns. Failure to fulfill these requirements shall subject the applicant or recipient, its CONTRACTORs and subcontractors, its successors, and assigns to those sanctions specified by the grant or loan agreement or Contract through which Federal assistance is provided, and to such sanctions as are specified by 24 CFR.

ARTICLE 9- CONTRACT DOCUMENTS

9.01 *Contents:*

A. The Contract Documents consist of the following:

1. This Agreement;

2. Performance Bond;

3. Payment Bond;

4. Bid Bonds;

5. General Conditions;

6. Supplementary Conditions;

7. Specifications as listed in the table of contents of the Project Manual;

8. Drawings as listed in the table of contents of the Project Manual;

9. Addenda (N/A);

10. Exhibits this Agreements;

1. Notice to Proceed;

2. CONTRACTOR's Bid;
3. Documentation submitted by CONTRACTOR prior to Notice of Award;

11. The following which may be delivered or issued on or after the Effective Date of the Agreement and are not attached hereto:

Written Amendments;
Work Change Directives;
Change Order(s).

B. The documents listed in paragraph 9.01 A are attached to this Agreement (except as expressly noted otherwise above).
C. There are no Contract Documents other than those listed above in this Article 9.
D. The Contract Documents may only be amended, modified, or supplemented as provided in paragraph 3.05 of the General Conditions.

ARTICLE 10- MISCELLANEOUS

10.01 *Terms:* Terms used in this Agreement will have the meanings indicated in the General Conditions.

10.02 *Assignment of Contract:* Assignment by a party hereto of any rights under or interests in the Contract will be binding on another party hereto without the written consent of the party sought to be bound; and, specifically but without limitation, moneys that may become due and moneys that are due may not be assigned without such consent (except to the extent that the effect of this restriction may be limited by law), and unless specifically stated to the contrary in any written consent to an assignment, no assignment will release or discharge the assignor from any duty or responsibility under the Contract Documents.

10.03 *Successors and Assigns:* OWNER and CONTRACTOR each binds itself, its partners, successors, assigns, and legal representatives to the other party hereto, its partners, successors, assigns, and legal representatives in respect to all covenants, agreements, and obligations contained in the Contract Documents.

10.04 *Severability:* Any provision or part of the Contract Documents held to be void or unenforceable under any Law or Regulation shall be deemed stricken, and all remaining provisions shall continue to be valid and binding upon OWNER and CONTRACTOR, who agree that the Contract Documents shall be reformed to replace such stricken provision or part thereof with a valid and enforceable provision that comes as close as possible to expressing the intention of the stricken provision.

IN WITNESS WHEREOF, OWNER and CONTRACTOR have signed this Agreement in duplicate. One counterpart each has been delivered to OWNER and CONTRACTOR. All portions of the Contract Documents have been signed or identified by OWNER and CONTRACTOR or on their behalf.

This Agreement will be effective on _____, 2021, (which is the Effective Date of the Agreement).

OWNER:	**CONTRACTOR:**
NORTH OGDEN CITY CORPORATION	
By: _____	By: _____

SECTION 11-B

BOND FORMS

WASATCH CIVIL

Consulting Engineering

BID BOND

BIDDER (Name and Address):

_____
_____
_____

SURETY (Name and Address of Principal Place of Business):

_____
_____
_____

OWNER (Name and Address):

_____
_____
_____

BID
BID DUE DATE:_____
PROJECT (Brief Description Including Location):

_____
_____
_____

BOND
BOND NUMBER:_____
DATE (Not later than Bid due date):_____
PENAL SUM:_____ _____
(Words) (Figures)

IN WITNESS WHEREOF, Surety and Bidder, intending to be legally bound hereby, subject to the terms printed on the reverse side hereof, do each cause this Bid Bond to be duly executed on its behalf by its authorized officer, agent, or representative.

BIDDER	SURETY
_____ (Seal)	_____ (Seal)
Bidder's Name and Corporate Seal	Surety's Name and Corporate Seal
By: _____	By: _____
Signature and Title	Signature and Title (Attach Power of Attorney)
Attest: _____	Attest: _____
Signature and Title	Signature and Title

Note: (1) Above addresses are to be used for giving required notice.
(2) Any singular reference to Bidder, Surety, OWNER or other party shall be considered plural where applicable.

1. Bidder and Surety, jointly and severally, bind themselves, their heirs, executors, administrators,

successors and assigns to pay to OWNER upon default of Bidder any difference between the total amount of Bidder's Bid and the total amount of the Bid of the next lowest, responsible and responsive Bidder as determined by OWNER for the Work required by the Contract Documents, provided that:

1.1. If there is no such next lowest, responsible and responsive Bidder, and OWNER does not abandon the Project, then Bidder and Surety shall pay to OWNER the penal sum set forth on the face of this Bond, and

1.2. In no event shall Bidder's and Surety's obligation hereunder exceed the penal sum set forth on the face of this Bond.

2. Default of Bidder shall occur upon the failure of Bidder to deliver within the time required by the Bidding Documents (or any extension thereof agreed to in writing by OWNER) the executed Agreement required by the Bidding Documents and any performance and payment Bonds required by the Bidding Documents.

3. This obligation shall be null and void if:

3.1. OWNER accepts Bidder's Bid and Bidder delivers within the time required by the Bidding Documents (or any extension thereof agreed to in writing by OWNER) the executed Agreement required by the Bidding Documents and any performance and payment Bonds required by the Bidding Documents, or

3.2. All Bids are rejected by OWNER, or

3.3. OWNER fails to issue a Notice of Award to Bidder within the time specified in the Bidding Documents (or any extension thereof agreed to in writing by Bidder and, if applicable, consented to by Surety when required by paragraph 5 hereof).

4. Payment under this Bond will be due and payable upon default by Bidder and within 30 calendar days after receipt by Bidder and Surety of written notice of default from OWNER, which notice will be given with responsible promptness, identifying this Bond and the Project and including a statement of the amount due.

5. Surety waives notice of and any and all defenses based on or arising out of any time extension to issue Notice of Award agreed to in writing by OWNER and Bidder, provided that the total time for issuing Notice of Award including extensions shall not in the aggregate exceed 120 days from Bid due date without Surety's written consent.

6. No suit or action shall be commenced under this Bond prior to 30 calendar days after the notice of default required in paragraph 4 above is received by Bidder and Surety and in no case later than one year after Bid due date.

7. Any suit or action under this Bond shall be commenced only in a court of competent jurisdiction located in the state in which the Project is located.

8. Notices required hereunder shall be in writing and sent to Bidder and Surety at their respective addresses shown on the face of this Bond. Such notices may be sent by personal delivery, commercial courier or by United States Registered or Certified Mail, return receipt requested, postage pre-paid, and shall be deemed to be effective upon receipt by the party concerned.

9. Surety shall cause to be attached to this Bond a current and effective Power or Attorney evidencing the authority of the officer, agent or representative who executed this Bond on behalf of Surety to execute, seal and deliver such Bond and bind the Surety thereby.

10. This Bond is intended to conform to all applicable statutory requirements. Any applicable requirement of any applicable statute that has been omitted from this Bond shall be deemed to be included herein as if set forth at length. If any provision of this Bond conflicts with any applicable statute, then the provision of said statute shall govern and the remainder of this Bond that is not in conflict therewith shall continue in full force and effect.

11. The term "Bid" as used herein includes a Bid, offer or proposal as applicable.

Performance Bond

Any singular reference to Contractor, Surety, Owner or other party shall be considered plural where applicable.

CONTRACTOR (Name and Address):

SURETY (Name and Address of Principal Place of Business):

OWNER (Name and Address):

CONTRACT
Date:
Amount:
Description (Name and Location):

BOND
Date (Not earlier than Contract Date):
Amount:
Modifications to this Bond Form:

Surety and Contractor, intending to be legally bound hereby, subject to the terms printed on the reverse side hereof, do each cause this Performance Bond to be duly executed on its behalf by its authorized officer, agent or representative.

CONTRACTOR AS PRINCIPAL
Company: (Corp. Seal)
Signature:_____
Name and Title:

SURETY
Company: (Corp. Seal)
Signature:_____
Name and Title:
(Attach Power of Attorney)

(Space is provided below for signatures of additional parties, if required.)

CONTRACTOR AS PRINCIPAL
Company: (Corp. Seal)
Signature:_____
Name and Title:

Company (Corp. Seal)
Signature:_____
Name and Title:

1. The CONTRACTOR and the Surety, jointly and severally, bind themselves, their heirs, executors, administrators, successors and assigns to the Owner for the

performance of the Contract, which is incorporated herein by reference.

2. If the CONTRACTOR performs the Contract, the Surety and the CONTRACTOR have no obligation under this Bond. except to participate in conferences as provided in paragraph 3.1.

3. If there is no OWNER Default, the Surety's obligation under this Bond shall arise after:

3.1 The OWNER has notified the CONTRACTOR and the Surety at the addresses described in paragraph 10 below, that the OWNER is considering declaring a CONTRACTOR Default and has requested and attempted to arrange a conference with the CONTRACTOR and the Surety to be held not later than fifteen days after receipt of such notice to discuss methods of performing the Contract. If the OWNER, the CONTRACTOR and the Surety agree, the CONTRACTOR shall be allowed a reasonable time to perform the Contract, but such an agreement shall not waive the OWNER's right, if any, subsequently to declare a CONTRACTOR Default; and

3.2 The OWNER has declared a CONTRACTOR Default and formally terminated the CONTRACTOR's right to complete the Contract. Such CONTRACTOR Default shall not be declared earlier than twenty days after the CONTRACTOR and the Surety have received notice as provided in paragraph 3.1; and

3.3 The OWNER has agreed to pay the Balance of the Contract Price to:

3.3.1 The Surety in accordance with the terms of the Contract;

3.3.2 Another contractor selected pursuant to paragraph 4.3 to perform the Contract.

4. When the OWNER has satisfied the conditions of paragraph 3, the Surety shall promptly and at the Surety's expense take one of the following actions:

4.1 Arrange for the CONTRACTOR, with consent of the OWNER, to perform and complete the Contract; or

4.2 Undertake to perform and complete the Contract itself, through its agents or through independent contractors; or

4.3 Obtain bids or negotiated proposals from qualified contractors acceptable to the OWNER for a contract for performance and completion of the Contract, arrange for a contract to he prepared for execution by the OWNER and the contractor selected with the OWNER'S concurrence, to he secured with performance and payment bonds executed by a qualified surety equivalent to the Bonds issued on the Contract, and pay to the OWNER the amount of damages as described in paragraph 6 in excess of the Balance of the Contract Price incurred by the OWNER resulting from the CONTRACTOR Default; or

4.4 Waive its right to perform and complete, arrange for completion, or obtain a new contractor and with reasonable promptness under the circumstances;

4.4.1 After investigation, determine the amount for which it may be liable to the OWNER and, as soon as practicable after the amount is determined, tender payment therefor to the OWNER; or

4.4.2 Deny liability, in whole or in part, and notify the OWNER citing reasons therefor.

5. If the Surety does not proceed as provided in paragraph 4 with reasonable promptness, the Surety shall be deemed to be in default on this Bond fifteen days after receipt of an additional written notice from the OWNER to the Surety demanding that the Surety perform its obligations under this Bond, and the OWNER shall be entitled to enforce any remedy available to the OWNER. If Surety proceeds as provided in paragraph 4.4 and the OWNER refuses the payment tendered or the Surety has denied pliability, in whole or in part, without further notice the OWNER shall be entitled to enforce any remedy available to the OWNER.

6. After the OWNER has terminated the CONTRACTOR's right to complete the Contract, and if the Surety elects to act under paragraph 4.1,4.2, or 4.3 above, then the responsibilities of the Surety to the OWNER shall not be greater than those of the CONTRACTOR under the Contract, and the responsibilities of the OWNER to the Surety shall not be greater than these of the OWNER under the Contract. To a limit of the amount of this Bond, but subject to commitment by the OWNER of the Balance of the Contract Price to mitigation of costs and damages on the Contract, the Surety is obligated without duplication for:

6.1 The responsibilities of the CONTRACTOR for correction of defective Work and completion of the Contract;

6.2 Additional legal, design professional and delay costs resulting from the CONTRACTOR's Default, and resulting from the actions or failure to act of the Surety under paragraph 4; and

6.3 Liquidated damages, or if no liquidated damages are specified in the Contract, actual damages caused by delayed performance or non-performance of the CONTRACTOR.

7. The Surety shall not be liable to the OWNER or others for obligations of the CONTRACTOR that are unrelated to the Contract, and the Balance of the Contract Price shall not be reduced or set off on account of any such unrelated obligations. No right of action shall accrue on this Bond to any person or entity other than the OWNER or its heirs, executors, administrators, or successors.

8. The Surety hereby waives notice of any change, including changes of time, to the Contract or to related subcontracts, purchase orders and other obligations.

9. Any proceeding, legal or equitable, under this Bond may be instituted in any court of competent jurisdiction in the location in which the Work or part of the Work is located and shall be instituted within two years after CONTRACTOR Default or within two years after the CONTRACTOR ceased working or within two years after the Surety refuses or fails to perform its obligations under this Bond, whichever occurs first. If the provisions of this paragraph are void or prohibited by law, the minimum period of limitation available to sureties as a defense in the jurisdiction of the suit shall he applicable.

10. Notice to the Surety, the OWNER or the CONTRACTOR shall be mailed or delivered to the address shown on the signature page.

11. When this Bond has been furnished to comply with a statutory or other legal requirement in the location where the Contract was be performed, any provision in this Bond conflicting with said statutory or legal requirement shall be deemed deleted here from and provisions conforming to such statutory or other legal requirement shall be deemed incorporated herein. The intent is that this Bond shall be construed as a statutory bond and not as a common law bond.

12. Definitions.

12.1 Balance of the Contract Price: The total amount payable by the OWNER to the CONTRACTOR under the Contract after all proper adjustments have been made, including allowance to the CONTRACTOR of any amounts received or to be received by the OWNER in settlement of insurance or other Claims for damages to which the CONTRACTOR is entitled, reduced by all valid and proper payments made to or on behalf of the CONTRACTOR under the Contract.

12.2 Contract: The agreement between the OWNER and the CONTRACTOR identified on the signature page, including all Contract Documents and changes thereto.

12.3 CONTRACTOR Default: Failure of the CONTRACTOR~ which has neither been remedied nor waived, to perform or otherwise to comply with the terms of the Contract.

12.4 OWNER Default: Failure of the OWNER, which has neither been remedied nor waived, to pay the CONTRACTOR as required by the Contract or to perform and complete or comply with the other terms thereof.

Payment Bond

Any singular reference to Contractor, Surety, Owner or other party shall be considered plural where applicable.

CONTRACTOR (Name and Address):

SURETY (Name and Address of Principal Place of Business):

OWNER (Name and Address):

CONTRACT
Date:
Amount:
Description (Name and Location):

BOND
Date (Not earlier than Contract Date):
Amount:
Modifications to this Bond Form:

Surety and Contractor, intending to be legally bound hereby, subject to the terms printed on the reverse side hereof, do each cause this Payment Bond to be duly executed on its behalf by its authorized officer, agent, or representative.

CONTRACTOR AS PRINCIPAL
Company: (Corp. Seal)
Signature:_____
Name and Title:

SURETY
Company: (Corp. Seal)
Signature:_____
Name and Title:
(Attach Power of Attorney)

(Space is provided below for signatures of additional parties, if required.)

CONTRACTOR AS PRINCIPAL
Company: (Corp. Seal)

Signature:_____
Name and Title:

SURETY
Company: (Corp. Seal)

Signature:_____
Name and Title:

1. The CONTRACTOR and the Surety, jointly and severally, bind themselves, their heirs, executors, administrators, successors and assigns to the OWNER to pay for labor, materials and equipment furnished for use in the performance of the Contract, which is incorporated herein by reference.

2. With respect to the OWNER. this obligation shall be null and void if the CONTRACTOR:

2.1. Promptly makes payment, directly or indirectly, for all sums due Claimants, and

2.2. Defends, indemnifies and holds harmless the OWNER from all claims, demands, liens or suits by any person or entity who furnished labor, materials or equipment for use in the performance of the Contract, provided the OWNER has promptly notified the CONTRACTOR and the Surety (at the addresses described in paragraph 12) of any claims, demands, liens or suits and tendered defense of such claims, demands, liens or suits to the CONTRACTOR and the Surety, and provided there is no OWNER Default.

3. With respect to Claimants, this obligation shall he null and void if the CONTRACTOR promptly makes payment, directly or indirectly, for all sums due.

4. The Surety shall have no obligation to Claimants under this Bond until:

4. 1 Claimants who are employed by or have a direct contract with the CONTRACTOR have given notice to the Surety (at the addresses described in paragraph 12) and sent a copy, or notice thereof, to the OWNER, stating that a claim is being made under this Bond and, with substantial accuracy, the amount of the claim.

4.2. Claimants who do not have a direct contract with the CONTRACTOR:

1. Have furnished written notice to the CONTRACTOR and Sent a copy, or notice thereof, to the OWNER, within 90 days after having last performed labor or last furnished materials or equipment included in the claim stating, with substantial accuracy, the amount of the claim and the name of the party to whom the materials were furnished or supplied or for whom the labor was done or performed; and

2. Have either received a rejection in whole or in part from the CONTRACTOR, or not received within 30 days of furnishing the above notice any communication from the CONTRACTOR by which the CONTRACTOR had indicated the claim will be paid directly or indirectly; and

3. Not having been paid within the above 30 days, have sent a written notice to the Surety and sent a copy, or notice thereof, to the OWNER, stating that a claim is being made under this Bond and enclosing a copy of the previous written notice furnished to the CONTRACTOR.

5. If a notice required by paragraph 4 is given by the OWNER to the CONTRACTOR or to the Surety, that is sufficient compliance.

6. When the Claimant has satisfied the conditions of paragraph 4, the Surety shall promptly and at the Surety's expense take the following actions:

6.1. Send an answer to the Claimant, with a copy to the OWNER, within 45 days after receipt of the claim, stating the amounts that are undisputed and the basis for challenging any amounts that are disputed

6.2. Pay or arrange for payment of any undisputed amounts.

7. The Surety's total obligation shall, not exceed the amount of this Bond, and the amount of this Bond shall be credited for any payments made in good faith by the Surety.

8. Amounts owed by the OWNER to the CONTRACTOR under the Contract shall be used for the performance of the Contract and to satisfy claims, if any, under any Performance Bond. By the CONTRACTOR furnishing and the OWNER accepting this Bond, they agree that all funds earned by the CONTRACTOR in the performance of the Contract are dedicated to satisfy obligations of the CONTRACTOR and the Surety under this Bond, subject to the OWNER's priority to use the funds for the completion of the Work.

9. The Surety shall not be liable to the OWNER, Claimants or others for obligations of the CONTRACTOR that are unrelated to the Contract. The OWNER shall not be liable for payment of any costs or expenses of any Claimant under this Bond, and shall have under this Bond no obligations to make payments to, give notices on behalf of, or otherwise have obligations to Claimants under this Bond.

10. The Surety hereby waives notice of any change, including changes of time, to the Contract or to related Subcontracts, purchase orders and other obligations.

11. No suit or action shall be commenced by a Claimant under this Bond other than in a court of competent jurisdiction in the location in which the Work or part of the Work is located or after the expiration of one year from the date (1) on which the Claimant gave the notice required by paragraph 4.1 or paragraph 4.2.3, or (2) on which the last labor or service was performed by anyone or the last materials or equipment were furnished by anyone under the Construction Contract, whichever of (1) or (2) first occurs. If the provisions of this paragraph are void or prohibited by law, the minimum period of limitation available to sureties as a defense in the jurisdiction of the suit shall be applicable.

12. Notice to the Surety, the OWNER or the CONTRACTOR shall be mailed or delivered to the addresses shown on the signature page. Actual receipt of notice by Surety, the OWNER or the CONTRACTOR, however accomplished, shall be sufficient compliance as of the date received at the address shown on the Signature page.

13. When this Bond has been furnished to comply with a statutory or other legal requirement in the location where the Contract was to be performed, any provision in this Bond conflicting with said Statutory or legal requirement shall be deemed deleted here from and provisions conforming to such statutory or other legal requirement shall be deemed incorporated herein. The intent is, that this Bond shall be construed as a statutory Bond and not as a common law bond.

14. Upon request of any person or entity appearing to be a potential beneficiary of this Bond, the CONTRACTOR shall promptly furnish a copy of this Bond or shall permit a copy to be made.

15. DEFINITIONS

15.1 Claimant: An individual or entity having a direct contract with the CONTRACTOR or with a Subcontractor of the CONTRACTOR to furnish labor, materials or equipment for use in the performance of the Contract. The intent of this Bond shall be to include without limitation in the terms 'labor, materials or equipment that part of water, gas, power, light, heat, oil, gasoline, telephone service or rental equipment used in the Contract, architectural and engineering services required for performance of the Work of the CONTRACTOR and the CONTRACTOR's Subcontractors, and all other items for which a mechanic's lien may be asserted in the jurisdiction where the labor, materials or equipment were furnished.

15..2 Contract: The agreement between the OWNER and the CONTRACTOR identified on the signature page, including all Contract Documents and changes thereto.

15..3 OWNER Default: Failure of the OWNER, which has neither been remedied nor waived, to pay the CONTRACTOR as required by the Contract or to perform and complete or comply with the other terms thereof.

SECTION II-C

GENERAL CONDITIONS

WASATCH CIVIL

Consulting Engineering

GENERAL CONDITIONS
TABLE OF CONTENTS

ARTICLE 1 - DEFINITIONS AND TERMINOLOGY . . . 3
1.01 *Defined Terms* . . . 3
1.02 *Terminology* . . . 5
ARTICLE 2 - PRELIMINARY MATTERS . . . 5
2.01 *Delivery of Bonds* . . . 5
2.02 *Copies of Documents* . . . 5
2.03 *Commencement of Contract Times; Notice to Proceed* . . . 5
2.04 *Starting the Work* . . . 5
2.05 *Before Starting Construction* . . . 5
2.06 *Preconstruction Conference* . . . 6
2.07 *Initial Acceptance of Schedules* . . . 6
ARTICLE 3 - CONTRACT DOCUMENTS - INTENT, AMENDING, REUSE . . . 6
3.01 *Intent* . . . 6
3.02 *Reference Standards* . . . 6
3.03 *Reporting and Resolving Discrepancies* . . . 6
3.04 *Amending and Supplementing Contract Documents* . . . 6
3.05 *Reuse of Documents* . . . 7
ARTICLE 4 - AVAILABILITY OF LANDS; SUBSURFACE AND PHYSICAL CONDITIONS; REFERENCE POINTS . . . 7
4.01 *Availability of Lands* . . . 7
4.02 *Subsurface and Physical Conditions* . . . 7
4.03 *Differing Subsurface or Physical Conditions* . . . 7
4.04 *Underground Facilities* . . . 8
4.05 *Reference Points* . . . 8
4.06 *Hazardous Environmental Condition at Site* . . . 8
ARTICLE 5 - BONDS AND INSURANCE . . . 9
5.01 *Performance, Payment, and Other Bonds* . . . 9
5.02 *Licensed Sureties and Insurers* . . . 9
5.03 *Certificates of Insurance* . . . 10
5.04 *CONTRACTOR'S Liability Insurance* . . . 10
5.05 *OWNER'S Liability Insurance* . . . 10
5.06 *Property Insurance* . . . 10
5.07 *Waiver of Rights* . . . 11
5.08 *Receipt and Application of Insurance Proceeds* . . . 11
5.09 *Acceptance of Bonds and Insurance; Option to Replace* . . . 12
5.10 *Partial Utilization, Acknowledgment of Property Insurer* . . . 12
ARTICLE 6 - CONTRACTOR'S RESPONSIBILITIES . . . 12
6.01 *Supervision and Superintendence* . . . 12
6.02 *Labor; Working Hours* . . . 12
6.03 *Services, Materials, and Equipment* . . . 12
6.04 *Progress Schedule* . . . 12
6.05 *Substitutes and "Or-Equals"* . . . 12
6.06 *Concerning Subcontractors, Suppliers, and Others* . . . 13
6.07 *Patent Fees and Royalties* . . . 14
6.08 *Permits* . . . 14
6.09 *Laws and Regulations* . . . 14
6.10 *Taxes* . . . 14
6.11 *Use of Site and Other Areas* . . . 14
6.12 *Record Documents* . . . 15
6.13 *Safety and Protection* . . . 15
6.14 *Safety Representative* . . . 15
6.15 *Hazard Communication Programs* . . . 15
6.16 *Emergencies* . . . 15
6.17 *Shop Drawings and Samples* . . . 16
6.18 *Continuing the Work* . . . 16
6.19 *CONTRACTOR'S General Warranty and Guarantee* . . . 16
6.20 *Indemnification* . . . 17
ARTICLE 7 - OTHER WORK . . . 17
7.01 *Related Work at Site* . . . 17
7.02 *Coordination* . . . 17
ARTICLE 8 - OWNER'S RESPONSIBILITIES . . . 18
8.01 *Communications to Contractor* . . . 18
8.02 *Replacement of ENGINEER* . . . 18
8.03 *Furnish Data* . . . 18
8.04 *Pay Promptly When Due* . . . 18

8.05 *Lands and Easements; Reports and Tests* 18
8.06 *Insurance* 18
8.07 *Change Orders* 18
8.08 *Inspections, Tests, and Approvals* 18
8.09 *Limitations on OWNER'S Responsibilities* 18
8.10 *Undisclosed Hazardous Environmental Condition* 18
8.11 *Evidence of Financial Arrangements* 18
ARTICLE 9 - ENGINEER'S STATUS DURING CONSTRUCTION 18
9.01 *OWNER'S Representative* 18
9.02 *Visits to Site* 18
9.03 *Project Representative* 18
9.04 *Clarifications and Interpretations* 19
9.05 *Authorized Variations in Work* 19
9.06 *Rejecting Defective Work* 19
9.07 *Shop Drawings, Change Orders, and Payments* 19
9.08 *Determinations for Unit Price Work* 19
9.09 *Decisions on Requirements of Contract Documents and Acceptability of Work* 19
9.10 *Limitations on ENGINEER'S Authority and Responsibilities* 19
ARTICLE 10 - CHANGES IN THE WORK; CLAIMS 20
10.01 *Authorized Changes in the Work* 20
10.02 *Unauthorized Changes in the Work* 20
10.03 *Execution of Change Orders* 20
10.04 *Notification to Surety* 20
10.05 *Claims and Disputes* 20
ARTICLE 11 - COST OF THE WORK; CASH ALLOWANCES; UNIT PRICE WORK 20
11.01 *Cost of the Work* 20
11.02 *Cash Allowances* 22
11.03 *Unit Price Work* 22
ARTICLE 12 - CHANGE OF CONTRACT PRICE; CHANGE OF CONTRACT TIMES 22
12.01 *Change of Contract Price* 22
12.02 *Change of Contract Times* 23
12.03 *Delays Beyond CONTRACTOR'S Control* 23
12.04 *Delays Within CONTRACTOR'S Control* 23
12.05 *Delays Beyond OWNER'S and CONTRACTOR'S Control* 23
12.06 *Delay Damages* 23
ARTICLE 13 - TESTS AND INSPECTIONS; CORRECTION, REMOVAL OR ACCEPTANCE OF DEFECTIVE WORK 23
13.01 *Notice of Defects* 23
13.02 *Access to Work* 23
13.03 *Tests and Inspections* 23
13.04 *Uncovering Work* 24
13.05 *OWNER May Stop the Work* 24
13.06 *Correction or Removal of Defective Work* 24
13.07 *Correction Period* 24
13.08 *Acceptance of Defective Work* 24
13.09 *OWNER May Correct Defective Work* 25
ARTICLE 14 - PAYMENTS TO CONTRACTOR AND COMPLETION 25
14.01 *Schedule of Values* 25
14.02 *Progress Payments* 25
14.03 *CONTRACTOR'S Warranty of Title* 26
14.04 *Substantial Completion* 26
14.05 *Partial Utilization* 27
14.06 *Final Inspection* 27
14.07 *Final Payment* 27
14.08 *Final Completion Delayed* 27
14.09 *Waiver of Claims* 28
ARTICLE 15 - SUSPENSION OF WORK AND TERMINATION 28
15.01 *OWNER May Suspend Work* 28
15.02 *OWNER May Terminate for Cause* 28
15.03 *OWNER May Terminate for Convenience* 28
15.04 *CONTRACTOR May Stop Work or Terminate* 28
ARTICLE 16 - DISPUTE RESOLUTION 29
16.01 *Methods and Procedures* 29
ARTICLE 17 - MISCELLANEOUS 29
17.01 *Giving Notice* 29
17.02 *Computation of Times* 29
17.03 *Cumulative Remedies* 29
17.04 *Survival of Obligations* 29
17.05 *Controlling Law* 29

GENERAL CONDITIONS

ARTICLE 1 - DEFINITIONS AND TERMINOLOGY

1.01 DEFINED TERMS

A. Wherever used in the Contract Documents and printed with initial or all capital letters, the terms listed below will have the meanings indicated which are applicable to both the singular and plural thereof.

1. *Addenda* - Written or graphic instruments issued prior to the opening of Bids which clarify, correct, or change the Bidding Requirements or the Contract Documents.

2. *Agreement* - The written instrument which is evidence of the agreement between OWNER and CONTRACTOR covering the Work.

3. *Application for Payment* - The form acceptable to ENGINEER which is to be used by CONTRACTOR during the course of the Work in requesting progress or final payments and which is to be accompanied by such supporting documentation as is required by the Contract Documents.

4. *Asbestos* - Any material that contains more than one percent (1%) asbestos and is friable or is releasing asbestos fibers into the air above current action levels established by the United States Occupational Safety and Health Administration.

5. *Bid* - The offer or proposal of a bidder submitted on the prescribed form setting forth the prices for the Work to be performed.

6. *Bidding Documents* - The Bidding Requirements and the proposed Contract Documents (including all Addenda issued prior to receipt of Bids).

7. *Bidding Requirements* - The Advertisement or Invitation to Bid, Instructions to Bidders, Bid security form, if any, and the Bid form with any supplements.

8. *Bonds* - Performance and payment bonds and other instruments of security.

9. *Change Order* - A document recommended by ENGINEER which is signed by CONTRACTOR and OWNER and authorizes an addition, deletion, or revision in the Work or an adjustment in the Contract Price or the Contract Times, issued on or after the Effective Date of the Agreement.

10. *Claim* - A demand or assertion by OWNER or CONTRACTOR seeking an adjustment of Contract Price or Contract Times, or both, or other relief with respect to the terms of the Contract. A demand for money or services by a third party is not a Claim.

11. *Contract* - The entire and integrated written agreement between the OWNER and CONTRACTOR concerning the Work. The Contract supersedes prior negotiations, representations, or agreements, whether written or oral.

12. *Contract Documents* - The Contract Documents establish the rights and obligations of the parties and include the Agreement, Addenda (which pertain to the Contract Documents), CONTRACTOR's Bid (including documentation accompanying the Bid and any post Bid documentation submitted prior to the Notice of Award) when attached as an exhibit to the Agreement, the Notice to Proceed, the Bonds, these General Conditions, the Supplementary Conditions, the Specifications and the Drawings as the same are more specifically identified in the Agreement, together with all Written Amendments, Change Orders, Work Change Directives, Field Orders, and ENGINEER's written interpretations and clarifications issued on or after the Effective Date of the Agreement. Approved Shop Drawings and the reports and drawings of subsurface and physical conditions are not Contract Documents. Only printed or hard copies of the items listed in this paragraph are Contract Documents. Files in electronic media format of text, data, graphics, and the like that may be furnished by OWNER to CONTRACTOR are not Contract Documents.

13. *Contract Price* - The moneys payable by OWNER to CONTRACTOR for completion of the Work in accordance with the Contract Documents as stated in the Agreement (subject to the provisions of paragraph 11.03 in the case of Unit Price Work).

14. *Contract Times* - The number of days or the dates stated in the Agreement to: (i) achieve Substantial Completion; and (ii) complete the Work so that it is ready for final payment as evidenced by ENGINEER's written recommendation of final payment.

15. *CONTRACTOR* - The individual or entity with whom OWNER has entered into the Agreement.

16. *Cost of the Work* - See paragraph 11.01.A for definition.

17. *Drawings* - That part of the Contract Documents prepared or approved by ENGINEER which graphically shows the scope, extent, and character of the Work to be performed by CONTRACTOR. Shop Drawings and other CONTRACTOR submittals are not Drawings as so defined.

18. *Effective Date of the Agreement* - The date indicated in the Agreement on which it becomes effective, but if no such date is indicated, it means the date on which the Agreement is signed and delivered by the last of the two parties to sign and deliver.

19. *ENGINEER* - The individual or entity named as such in the Agreement.

20. *ENGINEER's Consultant* - An individual or entity having a contract with ENGINEER to furnish services as ENGINEER's independent professional associate or consultant with respect to the Project and who is identified as such in the Supplementary Conditions.

21. *Field Order* - A written order issued by ENGINEER which requires minor changes in the Work but which does not involve a change in the Contract Price or the Contract Times.

22. *General Requirements* - Sections of Division 1 of the Specifications. The General Requirements pertain to all sections of the Specifications.

23. *Hazardous Environmental Condition* - The presence at the Site of Asbestos, PCBs, Petroleum, Hazardous Waste, or Radioactive Material in such quantities or circumstances that may present a substantial danger to persons or property exposed thereto in connection with the Work.

24. *Hazardous Waste* - The term Hazardous Waste shall have the meaning provided in Section 1004 of the Solid Waste Disposal Act (42 USC Section 6903) as amended from time to time.

25. *Laws and Regulations; Laws or Regulations* - Any and all applicable laws, rules, regulations, ordinances, codes, and orders of any and all governmental bodies, agencies, authorities, and courts having jurisdiction.

26. *Liens* - Charges, security interests, or encumbrances upon Project funds, real property, or personal property.

27. *Milestone* - A principal event specified in the Contract Documents relating to an intermediate completion date or time prior to Substantial Completion of all the Work.

28. *Notice of Award* - The written notice by OWNER to the apparent successful bidder stating that upon timely compliance by the apparent successful bidder with the conditions precedent listed therein, OWNER will sign and deliver the Agreement.

29. *Notice to Proceed* - A written notice given by OWNER to CONTRACTOR fixing the date on which the Contract Times will commence to run and on which CONTRACTOR shall start to perform the Work under the Contract Documents.

30. *OWNER* - The individual, entity, public body, or authority with whom CONTRACTOR has entered into the Agreement and for whom the Work is to be performed.

31. *Partial Utilization* - Use by OWNER of a substantially completed part of the Work for the purpose for which it is intended (or a related purpose) prior to Substantial Completion of all the Work.

32. *PCB's* - Polychlorinated biphenyls.

33. *Petroleum* - Petroleum, including crude oil or any fraction thereof which is liquid at standard conditions of temperature and pressure (60 degrees Fahrenheit and 14.7 pounds per square inch absolute), such as oil, petroleum, fuel oil, oil sludge, oil refuse, gasoline, kerosene, and oil mixed with other non-Hazardous Waste and crude oils.

34. *Project* - The total construction of which the Work to be performed under the Contract Documents may be the whole, or a part as may be indicated elsewhere in the Contract Documents.

35. *Project Manual* - The bound documentary information prepared for bidding and constructing the Work. A listing of the contents of the Project Manual, which may be bound in one or more volumes, is contained in the table(s) of contents.

36. *Radioactive Material* - Source, special nuclear, or byproduct material as defined by the Atomic Energy Act of 1954 (42 USC Section 2011 et seq.) as amended from time to time.

37. *Resident Project Representative* - The authorized representative of ENGINEER who may be assigned to the Site or any part thereof.

38. *Samples* - Physical examples of materials, equipment, or workmanship that are representative of some portion of the Work and which establish the standards by which such portion of the Work will be judged.

39. *Shop Drawings* - All drawings, diagrams, illustrations, schedules, and other data or information which are specifically prepared or assembled by or for CONTRACTOR and submitted by CONTRACTOR to illustrate some portion of the Work.

40. *Site* - Lands or areas indicated in the Contract Documents as being furnished by OWNER upon which the Work is to be performed, including rights-of-way and easements for access thereto, and such other lands furnished by OWNER which are designated for the use of CONTRACTOR.

41. *Specifications* - That part of the Contract Documents consisting of written technical descriptions of materials, equipment, systems, standards, and workmanship as applied to the Work and certain administrative details applicable thereto.

42. *Subcontractor* - An individual or entity having a direct contract with CONTRACTOR or with any other Subcontractor for the performance of a part of the Work at the Site.

43. *Substantial Completion* - The time at which the Work (or a specified part thereof) has progressed to the point where, in the opinion of ENGINEER, the Work (or a specified part thereof) is sufficiently complete, in accordance with the Contract Documents , so that the work (or a specified part thereof) can be utilized for the purposes for which it is intended. The terms "substantially complete" and "substantially completed" as applied to al or part of the Work refer to Substantial Completion thereof.

44. *Supplementary Conditions* - That part of the Contract Documents which amends or supplements these General Conditions.

45. *Supplier* - A manufacturer, fabricator, supplier, distributor, materialman, or vendor having a direct contract with CONTRACTOR or with any Subcontractor to furnish materials or equipment to be incorporated in the Work by CONTRACTOR or any Subcontractor.

46. *Underground Facilities* - All underground pipelines, conduits, ducts, cables, wires, manholes, vaults, tanks, tunnels, or other such facilities or attachments, and any encasements containing such facilities, including those that convey electricity, gases, steam, liquid petroleum products, telephone or other communications, cable television, water, wastewater, storm water, other liquids or chemicals, or traffic or other control systems.

47. *Unit Price Work* - Work to be paid for on the basis of unit prices.

48. *Work* - The entire completed construction or the various separately identifiable parts thereof required to be provided under the Contract Documents. Work includes and is the result of performing or providing all labor, services, and documentation necessary to produce such construction, and furnishing, installing, and incorporating all materials and equipment into such construction, all as required by the Contract Documents.

49. *Work Change Directive* - A written statement to CONTRACTOR issued on or after the Effective Date of the Agreement and signed by OWNER and recommended by ENGINEER ordering an addition, deletion, or revision in the Work, or responding to differing or unforeseen subsurface or physical conditions under which the Work is to be performed or to emergencies. A Work Change Directive will not change the Contract Price or the Contract Times but is evidence that the parties expect that the change ordered or documented by a Work Change Directive will be incorporated in a subsequently issued Change Order following negotiations by the parties as to its effect, if any, on the Contract Price or Contract Times.

50. *Written Amendment* - A written statement modifying the Contract Documents, signed by OWNER and CONTRACTOR on or after the Effective Date of the Agreement and normally dealing with the nonengineering or nontechnical rather than strictly construction-related aspects of the Contract Documents.

1.02 TERMINOLOGY

A. *Intent of Certain Terms or Adjectives*

1. Whenever in the Contract Documents the terms "as allowed," "as approved," or terms of like effect or import are used,

or the adjectives "reasonable," "suitable," "acceptable," "proper," "satisfactory," or adjectives of like effect or import are used to describe an action or determination of ENGINEER as to the Work, it is intended that such action or determination will be solely to evaluate, in general, the completed Work for compliance with the requirements of and information in the Contract Documents and conformance with the design concept of the completed Project as a functioning whole as shown or indicated in the Contract Documents (unless there is a specific statement indicating otherwise). The use of any such term or adjective shall not be effective to assign to ENGINEER any duty or authority to supervise or direct the performance of the Work or any duty or authority to undertake responsibility contrary to the provisions of paragraph 9.10 or any other provision of the Contract Documents.

B. *Day*

1. The word "day" shall constitute a calendar day of 24 hours measured from midnight to the next midnight.

C. *Defective*

1. The word "defective," when modifying the word "Work," refers to Work that is unsatisfactory, faulty, or deficient in that it does not conform to the Contract Documents or does not meet the requirements of any inspection, reference standard, test, or approval referred to in the Contract Documents, or has been damaged prior to ENGINEER's recommendation of final payment (unless responsibility for the protection thereof has been assumed by OWNER at Substantial Completion in accordance with paragraph 14.04 or 14.05).

D. *Furnish, Install, Perform, Provide*

1. The word "furnish," when used in connection with services, materials, or equipment, shall mean to supply and deliver said services, materials, or equipment to the Site (or some other specified location) ready for use or installation and in usable operable condition.

2. The word "install," when used in connection with services, materials, or equipment, shall mean to put into use or place in final position said services, materials, or equipment complete and ready for intended use.

3. The words "perform" or "provide," when used in connection with services, materials, or equipment, shall mean to furnish and install said services, materials, or equipment complete and ready for intended use.

4. When "furnish," "install," "perform," or "provide" is not used in connection with services, materials, or equipment in a context clearly requiring an obligation of CONTRACTOR, "provide" is implied.

E. Unless stated otherwise in the Contract Documents, words or phrases which have a well-known technical or construction industry or trade meaning are used in the Contract Documents in accordance with such recognized meaning.

ARTICLE 2 - PRELIMINARY MATTERS

2.01 DELIVERY OF BONDS

A. When CONTRACTOR delivers the executed Agreements to OWNER, CONTRACTOR shall also deliver to OWNER such Bonds as CONTRACTOR may be required to furnish.

2.02 COPIES OF DOCUMENTS

A. OWNER shall furnish to CONTRACTOR up to ten copies of the Contract Documents. Additional copies will be furnished upon request at the cost of reproduction.

2.03 COMMENCEMENT OF CONTRACT TIMES; NOTICE TO PROCEED

A. The Contract Times will commence to run on the thirtieth day after the Effective Date of the Agreement or, if a Notice to Proceed is given, on the day indicated in the Notice to Proceed. A Notice to Proceed may be given at any time within 30 days after the Effective Date of the Agreement. In no event will the Contract Times commence to run later than the sixtieth day after the day of Bid opening or the thirtieth day after the Effective Date of the Agreement, whichever date is earlier.

2.04 STARTING THE WORK

A. CONTRACTOR shall start to perform the Work on the date when the Contract Times commence to run. No Work shall be done at the Site prior to the date on which the Contract Times commence to run.

2.05 BEFORE STARTING CONSTRUCTION

A. *CONTRACTOR's Review of Contract Documents:* Before undertaking each part of the Work, CONTRACTOR shall carefully study and compare the Contract Documents and check and verify pertinent figures therein and all applicable field measurements. CONTRACTOR shall promptly report in writing to ENGINEER any conflict, error, ambiguity, or discrepancy which CONTRACTOR may discover and shall obtain a written interpretation or clarification from ENGINEER before proceeding with any Work affected thereby; however, CONTRACTOR shall not be liable to OWNER or ENGINEER for failure to report any conflict, error, ambiguity, or discrepancy in the Contract Documents unless CONTRACTOR knew or reasonable should have known thereof.

B. *Preliminary Schedules*: Within ten days after the Effective Date of the Agreement (unless otherwise specified in the General Requirements), CONTRACTOR shall submit to ENGINEER for its timely review:

1. a preliminary progress schedule indicating the times (numbers of days or dates) for starting and completing the various stages of the Work, including any Milestones specified in the Contract Documents;

2. a preliminary schedule of Shop Drawing and Sample submittals which will list each required submittal and the times for submitting, reviewing, and processing such submittal; and

3. a preliminary schedule of values for all of the Work which includes quantities and prices of items which when added together equal the Contract Price and subdivides the Work into component parts in sufficient detail to serve as the basis for progress payments during performance of the Work. Such prices will include an appropriate amount of overhead and profit applicable to each item of Work.

C. *Evidence of Insurance*: Before any Work at the Site is started, CONTRACTOR and OWNER shall each deliver to the other, with copies to each additional insured identified in the Supplementary Conditions, certificates of insurance (and other evidence of insurance which either of them or any additional

insured may reasonably request) which CONTRACTOR and OWNER respectively are required to purchase and maintain in accordance with Article 5.

2.06 PRECONSTRUCTION CONFERENCE

A. Within 20 days after the Contract Times start to run, but before any Work at the Site is started, a conference attended by CONTRACTOR, ENGINEER, and others as appropriate will be held to establish a working understanding among the parties as to the Work and to discuss the schedules referred to in paragraph 2.05.B, procedures for handling Shop Drawings and other submittals, processing Applications for Payment, and maintaining required records.

2.07 INITIAL ACCEPTANCE OF SCHEDULES

A. Unless otherwise provided in the Contract Documents, at least ten days before submission of the first Application for Payment a conference attended by CONTRACTOR, ENGINEER, and others as appropriate will be held to review for acceptability to ENGINEER as provided below the schedules submitted in accordance with paragraph 2.05.B. CONTRACTOR shall have an additional ten days to make corrections and adjustments and to complete and resubmit the schedules. No progress payment shall be made to CONTRACTOR until acceptable schedules are submitted to ENGINEER.

1. The progress schedule will be acceptable to ENGINEER if it provides an orderly progression of the Work to completion within any specified Milestones and the Contract Times. Such acceptance will not impose on ENGINEER responsibility for the progress schedule, for sequencing, scheduling, or progress of the Work nor interfere with or relieve CONTRACTOR from CONTRACTOR's full responsibility therefor.

2. CONTRACTOR's schedule of Shop Drawing and Sample submittals will be acceptable to ENGINEER if it provides a workable arrangement for reviewing and processing the required submittals.

3. CONTRACTOR's schedule of values will be acceptable to ENGINEER as to form and substance if it provides a reasonable allocation of the Contract Price to component parts of the Work.

ARTICLE 3 - CONTRACT DOCUMENTS: INTENT, AMENDING, REUSE

3.01 INTENT

A. The Contract Documents are complementary; what is called for by one is as binding as if called for by all.

B. It is the intent of the Contract Documents to describe a functionally complete Project (or part thereof) to be constructed in accordance with the Contract Documents. Any labor, documentation, services, materials, or equipment that may reasonably be inferred from the Contract Documents or from prevailing custom or trade usage as being required to produce the intended result will be provided whether or not specifically called for at no additional cost to OWNER.

C. Clarifications and interpretations of the Contract Documents shall be issued by ENGINEER as provided in Article 9.

3.02 REFERENCE STANDARDS

A. *Standards, Specifications, Codes, Laws, and Regulations*

1. Reference to standards, specifications, manuals, or codes of any technical society, organization, or association, or to Laws or Regulations, whether such reference be specific or by implication, shall mean the standard, specification, manual, code, or Laws or Regulations in effect at the time of opening of Bids (or on the Effective Date of the Agreement if there were no Bids), except as may be otherwise specifically stated in the Contract Documents.

2. No provision of any such standard, specification, manual or code, or any instruction of a Supplier shall be effective to change the duties or responsibilities of OWNER, CONTRACTOR, or ENGINEER, or any of their subcontractors, consultants, agents, or employees from those set forth in the Contract Documents, nor shall any such provision or instruction e effective to assign to OWNER, ENGINEER, or any of ENGINEER's Consultants, agents, or employees any duty or authority to supervise or direct the performance of the Work or any duty or authority to undertake responsibility inconsistent with the provisions of the Contract Documents.

3.03 REPORTING AND RESOLVING DISCREPANCIES

A. *Reporting Discrepancies*

1. If, during the performance of the Work, CONTRACTOR discovers any conflict, error, ambiguity, or discrepancy within the Contract Documents or between the Contract Documents and any provision of any Law or Regulation applicable to the performance of the Work or of any standard, specification, manual or code, or of any instruction of any Supplier, CONTRACTOR shall report it to ENGINEER in writing at once. CONTRACTOR shall not proceed with the Work affected thereby (except in an emergency as required by paragraph 6.16.A) until an amendment or supplement to the Contract Documents has been issued by one of the methods indicated in paragraph 3.04; provided, however, that CONTRACTOR shall not be liable to OWNER or ENGINEER for failure to report any such conflict, error, ambiguity, or discrepancy unless CONTRACTOR knew or reasonably should have known thereof.

B. *Resolving Discrepancies*

1. Except as may be otherwise specifically stated in the Contract Documents, the provisions of the Contract Documents shall take precedence in resolving any conflict, error, ambiguity, or discrepancy between the provisions of the Contract Documents and:

a. the provisions of any standard, specification, manual code, or instruction (whether or not specifically incorporated by reference in the Contact Documents); or

b. the provisions of any Laws or Regulations applicable to the performance of the Work (unless such an interpretation of the provisions of the Contract Documents would result in violation of such Law or Regulation).

3.04 AMENDING AND SUPPLEMENTING CONTRACT DOCUMENTS

A. The Contract Documents may be amended to provide for additions, deletions, and revisions in the Work or to modify the terms and conditions thereof in one or more of the following ways: (i) a Written Amendment; (ii) a Change Order; or (iii) a Work Change Directive.

B. The requirements of the Contract Documents may be supplemented, and minor variations and deviations in the Work may be authorized, by one or more of the following ways: (i) a Field Order; (ii) ENGINEER's approval of a Shop Drawing or

Sample; or (iii) ENGINEER's written interpretation or clarification.

3.05 REUSE OF DOCUMENTS

A. CONTRACTOR and any Subcontractor or Supplier or other individual or entity performing or furnishing any of the Work under a direct or indirect contract with OWNER: (i) shall not have or acquire any title to or ownership rights in any of the Drawings, Specifications, or other documents (or copies of any thereof) prepared by or bearing the seal of ENGINEER or ENGINEER's Consultant, including electronic media editions; and (ii) shall not reuse any of such Drawings, Specifications, other documents, or copies thereof on extensions of the Project or any other project without written consent of OWNER and ENGINEER and specific written verification or adaption by ENGINEER. This prohibition will survive final payment, completion, and acceptance of the Work, or termination or completion of the Contract. Nothing herein shall prelude CONTRACTOR from retaining copies of the Contract Documents for record purposes.

ARTICLE 4 - AVAILABILITY OF LANDS; SUBSURFACE AND PHYSICAL CONDITIONS; REFERENCE POINTS

4.01 AVAILABILITY OF LANDS

A. OWNER shall furnish the Site. OWNER shall notify CONTRACTOR of any encumbrances or restrictions not of general application but specifically related to use of the Site with which CONTRACTOR must comply in performing the Work. OWNER will obtain in a timely manner and pay for easements for permanent structures or permanent changes in existing facilities. If CONTRACTOR and OWNER are unable to agree on entitlement to or on the amount or extent, if any, of any adjustment in the Contract Price or Contract Times, or both, as a result of any delay in OWNER's furnishing the Site, CONTRACTOR may make a Claim therefor as provided in paragraph 10.05.

B. Upon reasonable written request, OWNER shall furnish CONTRACTOR with a current statement of record legal title and legal description of the lands upon which the Work is to be performed and OWNER's interest therein as necessary for giving notice of or filing a mechanic's or construction lien against such lands in accordance with applicable Laws and Regulations

C. CONTRACTOR shall provide for all additional lands and access thereto that may be required for temporary construction facilities or storage of materials and equipment.

4.02 SUBSURFACE AND PHYSICAL CONDITIONS

A. *Reports and Drawings:* The Supplementary Conditions identify:

1. those reports of explorations and tests of subsurface conditions at or contiguous to the Site that ENGINEER has used in preparing the Contract Documents; and

2. those drawings of physical conditions in or relating to existing surface or subsurface structures at or contiguous to the Site (except Underground Facilities) that ENGINEER has used in preparing the Contract Documents.

B. *Limited Reliance by CONTRACTOR on Technical Data Authorized:* CONTRACTOR may rely upon the general accuracy of the "technical data" contained in such reports and drawings, but such reports and drawings are not Contract Documents. Such "technical data" is identified in the Supplementary Conditions. Except for such reliance on such "technical data," CONTRACTOR may not rely upon or make any Claim against OWNER, ENGINEER, or any of ENGINEER's Consultants with respect to:

1. the completeness of such reports and drawings for CONTRACTOR's purposes, including, but not limited to, any aspects of the means, methods, techniques, sequences, and procedures of construction to be employed by CONTRACTOR, and safety precautions and programs incident thereto; or

2. other data, interpretations, opinions, and information contained in such reports or shown or indicated in such drawings; or

3. any CONTRACTOR interpretation of or conclusion drawn from any "technical data" or any such other data, interpretations, opinions, or information.

4.03 DIFFERING SUBSURFACE OR PHYSICAL CONDITIONS

A. *Notice*: If CONTRACTOR believes that any subsurface or physical condition at or contiguous to the Site that is uncovered or revealed either:

1. is of such a nature as to establish that any "technical data" on which CONTRACTOR is entitled to rely as provided in paragraph 4.02 is materially inaccurate; or

2. is of such a nature as to require a change in the Contract Documents or

3. differs materially from that shown or indicated in the Contract Documents; or

4. is of an unusual nature, and differs materially from conditions ordinarily encountered and generally recognized as inherent in work of the character provided for in the Contract Documents;

then CONTRACTOR shall, promptly after becoming aware thereof and before further disturbing the subsurface or physical conditions or performing any Work in connection therewith (except in an emergency as required by paragraph 6.16.A), notify OWNER and ENGINEER in writing about such condition. CONTRACTOR shall not further disturb such condition or perform any Work in connection therewith (except as aforesaid) until receipt of written order to do so.

B. *ENGINEER's Review:* After receipt of written notice as required by paragraph 4.03.A, ENGINEER will promptly review the pertinent condition, determine the necessity of OWNER's obtaining additional exploration or tests with respect thereto, and advise OWNER in writing (with a copy to CONTRACTOR) of ENGINEER's findings and conclusions.

C. *Possible, Price and Times Adjustments*

1. The Contract Price or the Contract Times, or both, will be equitably adjusted to the extent that the existence of such differing subsurface or physical condition causes an increase or decrease in CONTRACTOR's cost of, or time required for, performance of the Work; subject, however, to the following:

a. such condition must meet any one or more of the categories described in paragraph 4.03.A; and

b. with respect to Work that is paid for on a Unit Price Basis, any adjustment in Contract Price will be subject to the provisions of paragraphs 9.08 and 11.03.

2. CONTRACTOR shall not be entitled to any adjustment in the Contract Price or Contract Times if:

a. CONTRACTOR knew of the existence of such conditions at the time CONTRACTOR made a final commitment to OWNER in respect of Contract Price and Contract Times by the submission of a Bid or becoming bound under a negotiated contract; or

b. the existence of such condition could reasonably have been discovered or revealed as a result of any examination, investigation, exploration, test, or study of the Site and contiguous areas required by the Bidding Requirements or Contract Documents to be conducted by or for CONTRACTOR prior to CONTRACTOR 's making such final commitment; or

c. CONTRACTOR failed to give the written notice within the time and as required by paragraph 4.03.A.

3. If OWNER and CONTRACTOR are unable to agree on entitlement to or on the amount or extent, if any, of any adjustment in the Contract Price or Contract Times, or both, a Claim may be made therefor as provided in paragraph 10.05. However, OWNER, ENGINEER, and ENGINEER's Consultants shall not be liable to CONTRACTOR for any claims, costs, losses, or damages (including but not limited to all fees and charges of engineers, architects, attorneys, and other professionals and all court or arbitration or other dispute resolution costs) sustained by CONTRACTOR on or in connection with any other project or anticipated project.

4.04 UNDERGROUND FACILITIES

A. *Shown or Indicated:* The information and data shown or indicated in the Contract Documents with respect to existing Underground Facilities at or contiguous to the Site is based on information and data furnished to OWNER or ENGINEER by the owners of such Underground Facilities, including OWNER, or by others. Unless it is otherwise expressly provided in the Supplementary Conditions:

1. OWNER and ENGINEER shall not be responsible for the accuracy or completeness of any such information or data; and

2. the cost of all of the following will be included in the Contract Price, and CONTRACTOR shall have full responsibility for:

a. reviewing and checking all such information and data,

b. locating all Underground Facilities shown or indicated in the Contract Documents,

c. coordination of the Work with the owners of such Underground Facilities, including OWNER, during construction, and

d. the safety and protection of all such Underground Facilities and repairing any damage thereto resulting from the Work.

B. *Not Shown or Indicated*

1. If an Underground Facility is uncovered or revealed at or contiguous to the Site which was not shown or indicated, or not shown or indicated with reasonable accuracy in the Contract Documents, CONTRACTOR shall, promptly after becoming aware thereof and before further disturbing conditions affected thereby or performing any Work in connection therewith (except in an emergency as required by paragraph 6.16.A), identify the owner of such Underground Facility and give written notice to that owner and to OWNER and ENGINEER. ENGINEER will promptly review the Underground Facility and determine the extent, if any, to which a change is required in the Contract Documents to reflect and document the consequences of the existence or location of the Underground Facility. During such time, CONTRACTOR shall be responsible for the safety and protection of such Underground Facility.

2. If ENGINEER concludes that a change in the Contract Documents is required, a Work Change Directive or a Change Order will be issued to reflect and document such consequences. An equitable adjustment shall be made in the Contract Price of Contract Times, or both, to the extent that they are attributable to the existence or location of any Underground Facility that was not shown or indicated or not shown or indicated with reasonable accuracy in the Contract Documents and that CONTRACTOR did not know of and could not reasonable have been expected to be aware of or to have anticipated. If OWNER and CONTRACTOR are unable to agree on entitlement to or on the amount or extent, if any, of any such adjustment in Contract Price or Contract Times, OWNER or CONTRACTOR may make a Claim therefor as provided in paragraph 10.05.

4.05 REFERENCE POINTS

A. OWNER shall provide engineering surveys to establish reference points for construction which in ENGINEER's judgement are necessary to enable CONTRACTOR to proceed with the Work. CONTRACTOR shall be responsible for laying out the Work, shall protect and preserve the established reference points and property monuments, and shall make no changes or relocations without the prior written approval of OWNER. CONTRACTOR shall report to ENGINEER whenever any reference point or property monument is lost or destroyed or requires relocation because of necessary changes in grades or locations, and shall be responsible for the accurate replacement or relocation of such reference points or property monuments by professionally qualified personnel.

4.06 HAZARDOUS ENVIRONMENTAL CONDITION AT SITE

A. *Reports and Drawings:* Reference is made to the Supplementary Conditions for the identification of those reports and drawings relating to a Hazardous Environmental Condition identified at the Site, if any, that have been utilized by the ENGINEER in the preparation of the Contract Documents.

B. *Limited Reliance by CONTRACTOR on Technical Data Authorized:* CONTRACTOR may rely upon the general accuracy of the "technical data" contained in such reports and drawings, but such reports and drawings are not Contract Documents. Such "technical data" is identified in the Supplementary Conditions. Except for such reliance on such "technical data," CONTRACTOR may not rely upon or make any Claim against OWNER, ENGINEER or any of ENGINEER's Consultants with respect to:

1. the completeness of such reports and drawings for CONTRACTOR's purposes, including, but not limited to, any aspects of the means, methods, techniques, sequences and procedures of construction to be employed by CONTRACTOR and safety precautions and programs incident thereto; or

2. other data, interpretations, opinions and information contained in such reports or shown or indicated in such drawings; or

3. any CONTRACTOR interpretation of or conclusion drawn from any "technical data" or any such other data, interpretations, opinions or information.

C. CONTRACTOR shall not be responsible for any Hazardous Environmental Condition uncovered or revealed at the Site which was not shown or indicated in Drawings or Specifications or identified in the Contract Documents to be within the scope of the Work. CONTRACTOR shall be responsible for a Hazardous Environmental Condition created with any materials brought to the Site by CONTRACTOR, Subcontractors, Suppliers, or anyone else for whom CONTRACTOR is responsible.

D. If CONTRACTOR encounters a Hazardous Environmental Condition or if CONTRACTOR or anyone for whom CONTRACTOR is responsible creates a Hazardous Environmental Condition. CONTRACTOR shall immediately: (i) secure or otherwise isolate such condition; (ii) stop all Work in connection with such condition and in any area affected thereby (except in an emergency as required by paragraph 6.16); and (iii) notify OWNER and ENGINEER (and promptly thereafter confirm such notice in writing). OWNER shall promptly consult with ENGINEER concerning the necessity for OWNER to retain a qualified expert to evaluate such condition or take corrective action, if any.

E. CONTRACTOR shall not be required to resume Work in connection with such condition or in any affected area until after OWNER has obtained any required permits related thereto and delivered to CONTRACTOR written notice: (i) specifying that such condition and any affected area is or has been rendered safe for the resumption of Work; or (ii) specifying any special conditions under which such Work may be resumed safely. If OWNER and CONTRACTOR cannot agree as to entitlement to or on the amount or extent, if any, of any adjustment in Contract Price or Contract Times, or both, as a result of such Work stoppage or such special conditions under which Work is agreed to be resumed by CONTRACTOR, either party may make a Claim therefor as provided in paragraph 10.05.

F. If after receipt of such written notice CONTRACTOR does not agree to resume such Work based on a reasonable belief it is unsafe, or does not agree to resume such Work under such special conditions, then OWNER may order the portion of the Work that is in the area affected by such condition to be deleted from the Work. If OWNER and CONTRACTOR cannot agree as to entitlement to or on the amount or extent, if any, of an adjustment in Contract Price or Contract Times as a result of deleting such portion of the Work, then either party may make a Claim therefor as provided in paragraph 10.05. OWNER may have such deleted portion of the Work performed by OWNER's own forces or others in accordance with Article 7.

G. To the fullest extent permitted by Laws and Regulations, OWNER shall indemnify and hold harmless CONTRACTOR, Subcontractors, ENGINEER, ENGINEER's Consultants and the officers, directors, partners, employees, agents, other consultants, and subcontractors of each and any of them from and against all claims, costs. losses, and damages (including but not limited to all fees and charges of engineers, architects, attorneys, and other professionals and all court or arbitration or other dispute resolution costs) arising out of or relating to a Hazardous Environmental Condition, provided that such Hazardous Environmental Condition: (i) was not shown or indicated in the Drawings or Specifications or identified in the Contract Documents to be included within the scope of the Work, and (ii) was not created by CONTRACTOR or by anyone for whom CONTRACTOR is responsible. Nothing in this paragraph 4.06.E shall obligate OWNER to indemnify any individual or entity from and against the consequences of that individual's or entity's own negligence.

H. To the fullest extent permitted by Laws and Regulations, CONTRACTOR shall indemnify and hold harmless OWNER, ENGINEER, ENGINEER's Consultants, and the officers, directors, partners, employees, agents, other consultants, and subcontractors of each and any of them from and against all claims, costs, losses, and damages (including but not limited to all fees and charges of engineers, architects, attorneys, and other professionals and all court or arbitration or other dispute resolution costs) arising out of or relating to a Hazardous Environmental Condition created by CONTRACTOR or by anyone for whom CONTRACTOR is responsible. Nothing in this paragraph 4.06.F shall obligate CONTRACTOR to indemnify any individual or entity from and against the consequences of that individual's or entity's own negligence.

I. The provisions of paragraphs 4.02, 4.03, and 4.04 are not intended to apply to a Hazardous Environmental Condition uncovered or revealed at the Site.

ARTICLE 5 - BONDS AND INSURANCE

5.01 PERFORMANCE, PAYMENT, AND OTHER BONDS

A. CONTRACTOR shall furnish performance and payment Bonds, each in an amount at least equal to the Contract Price as security for the faithful performance and payment of all CONTRACTOR's obligations under the Contract Documents. These Bonds shall remain in effect at least until one year after the date when final payment becomes due, except as provided otherwise by Laws or Regulations or by the Contract Documents. CONTRACTOR shall also furnish such other Bonds as are required by the Contract Documents.

B. All Bonds shall be in the form prescribed by the Contract Documents except as provided otherwise by Laws or Regulations, and shall be executed by such sureties as are named in the current list of "Companies Holding Certificates of Authority as Acceptable Sureties on Federal Bonds and as Acceptable Reinsuring Companies" as published in Circular 570 (amended) by the Financial Management Service, Surety Bond Branch, U.S. Department of the Treasury. All Bonds signed by an agent must be accompanied by a certified copy of such agent's authority to act.

C. If the surety on any Bond furnished by CONTRACTOR is declared bankrupt or becomes insolvent or its right to do business is terminated in any state where any part of the Project is located or it ceases to meet the requirements of paragraph 5.01.B, CONTRACTOR shall within 20 days thereafter substitute another Bond and surety, both of which shall comply with the requirements of paragraphs 5.01 B and 5.02.

5.02 LICENSED SURETIES AND INSURERS

A. All Bonds and insurance required by the Contract Documents to be purchased and maintained by OWNER or CONTRACTOR shall be obtained from surety or insurance companies that are duly licensed or authorized in the jurisdiction in which the Project is located to issue Bonds or insurance policies for the limits and coverages so required. Such surety and insurance companies shall also meet such additional requirements and qualifications as may be provided in the Supplementary Conditions.

5.03 CERTIFICATES OF INSURANCE

A. CONTRACTOR shall deliver to OWNER, with copies to each additional insured identified in the Supplementary Conditions, certificates of insurance (and other evidence of insurance requested by OWNER or any other additional insured) which CONTRACTOR is required to purchase and maintain. OWNER shall deliver to CONTRACTOR, with copies to each additional insured identified in the Supplementary Conditions, certificates of insurance (and other evidence of insurance requested by CONTRACTOR or any other additional insured) which OWNER is required to purchase and maintain.

5.04 CONTRACTOR'S LIABILITY INSURANCE

A. CONTRACTOR shall purchase and maintain such liability and other insurance as is appropriate for the Work being performed and as will provide protection from claims set forth below which may arise out of or result from CONTRACTOR's performance of the Work and CONTRACTOR's other obligations under the contract Documents, whether it is to be performed by CONTRACTOR, any Subcontractor or Supplier, or by anyone directly or indirectly employed by any of them to perform any of the Work, or by anyone for whose acts any of them may be liable:

1. claims under workers' compensation, disability benefits, and other similar employee benefit acts;

2. claims for damages because of bodily injury, occupational sickness or disease, or death of CONTRACTOR's employees;

3. claims for damages because of bodily injury, sickness or disease, or death of any person other than CONTRACTOR's employees;

4. claims for damages insured by reasonably available personal injury liability coverage which are sustained: (i) by any person as a result of an offense directly or indirectly related to the employment of such person by CONTRACTOR, or (ii) by any other person for any other reason;

5. claims for damages, other than to the Work itself, because of injury to or destruction of tangible property wherever located, including loss of use resulting therefrom; and

6. claims for damages because of bodily injury or death of any person or property damage arising out of the ownership, maintenance or use of any motor vehicle.

B. The policies of insurance so required by this paragraph 5.04 to be purchased and maintained shall:

1. with respect to insurance required by paragraphs 5.04.A.3 through 5.04.A.6 inclusive, include as additional insureds (subject to any customary exclusion in respect of professional liability) OWNER, ENGINEER, ENGINEER's Consultants, and any other individuals or entities identified in the Supplementary Conditions, all of whom shall be listed as additional insureds, and include coverage for the respective officers, directors, partners, employees, agents, and other consultants and subcontractors of each and any of all such additional insureds, and the insurance afforded to these additional insureds shall provide primary coverage for all claims covered thereby;

2. include at least the specific coverages and be written for not less than the limits of liability provided in the Supplementary Conditions or required by Laws or Regulations, whichever is greater;

3. include completed operations insurance;

4. include contractual liability insurance covering CONTRACTOR's indemnity obligations under paragraphs 6.07, 6.11, and 6.20;

5. contain a provision or endorsement that the coverage afforded will not be canceled, materially changed or renewal refused until at least thirty days prior written notice has been given to OWNER and CONTRACTOR and to each other additional insured identified in the Supplementary Conditions to whom a certificate of insurance has been issued (and the certificates of insurance furnished by the CONTRACTOR pursuant to paragraph 5.03 will so provide);

6. remain in effect at least until final payment and at all times thereafter when CONTRACTOR may be correcting, removing, or replacing defective Work in accordance with paragraph 13.07; and

7. with respect to completed operations insurance, and any insurance coverage written on a claims-made basis, remain in effect for at least two years after final payment (and CONTRACTOR shall furnish OWNER and each other additional insured identified in the Supplementary Conditions, to whom a certificate of insurance has been issued, evidence satisfactory to OWNER and any such additional insured of continuation of such insurance at final payment and one year thereafter).

5.05 OWNER'S LIABILITY INSURANCE

A. In addition to the insurance required to be provided by CONTRACTOR under paragraph 5.04, OWNER, at OWNER's option, may purchase and maintain at OWNER's expense OWNER's own liability insurance as will protect OWNER against claims which may arise from operations under the Contract Documents.

5.06 PROPERTY INSURANCE

A. Unless otherwise provided in the Supplementary Conditions, OWNER shall purchase and maintain property insurance upon the Work at the Site in the amount of the full replacement cost thereof (subject to such deductible amounts as may be provided in the Supplementary Conditions or required by Laws and Regulations). This insurance shall:

1. include the interests of OWNER, CONTRACTOR, Subcontractors, ENGINEER, ENGINEER's Consultants, and any other individuals or entities identified in the Supplementary Conditions, and the officers, directors, partners, employees, agents, and other consultants and subcontractors of each and any of them, each of whom is deemed to have an insurable interest and shall be listed as an additional insured;

2. be written on a Builder's Risk "all-risk" or open peril or special causes of loss policy form that shall at least include insurance for physical loss or damage to the Work, temporary buildings, false work, and materials and equipment in transit, and shall insure against at least the following perils or causes of loss: fire, lightning, extended coverage, theft, vandalism and malicious mischief, earthquake, collapse, debris removal, demolition occasioned by enforcement of Laws and Regulations, water damage, and such other perils or causes of loss as may be specifically required by the Supplementary Conditions;

3. include expenses incurred in the repair or replacement of any insured property (including but not limited to fees and charges of engineers and architects);

4. cover materials and equipment stored at the Site or at another location that was agreed to in writing by OWNER prior to being incorporated in the Work, provided that such materials and equipment have been included in an Application for Payment recommended by ENGINEER;

5. allow for partial utilization of the Work by OWNER;

6. include testing and startup; and

7. be maintained in effect until final payment is made unless otherwise agreed to in writing by OWNER, CONTRACTOR, and ENGINEER with 30 days written notice to each other additional insured to whom a certificate of insurance has been issued.

B. OWNER shall purchase and maintain such boiler and machinery insurance or additional property insurance as may be required by the Supplementary Conditions or Laws and Regulations which will include the interests of OWNER, CONTRACTOR, Subcontractors, ENGINEER, ENGINEER's Consultants, and any other individuals or entities identified in the Supplementary Conditions, each of whom is deemed to have an insurable interest and shall be listed as an insured or additional insured.

C. All the policies of insurance (and the certificates or other evidence thereof) required to be purchased and maintained in accordance with paragraph 5.06 will contain a provision or endorsement that the coverage afforded will not be canceled or materially changed or renewal refused until at least 30 days prior written notice has been given to OWNER and CONTRACTOR and to each other additional insured to whom a certificate of insurance has been issued and will contain waiver provisions in accordance with paragraph 5.07.

D. OWNER shall not be responsible for purchasing and maintaining any property insurance specified in this paragraph 5.06 to protect the interests of CONTRACTOR, Subcontractors, or others in the Work to the extent of any deductible amounts that are identified in the Supplementary Conditions. The risk of loss within such identified deductible amount will be borne by CONTRACTOR, Subcontractors, or others suffering any such loss, and if any of them wishes property insurance coverage within the limits of such amounts, each may purchase and maintain it at the purchaser's own expense.

E. If CONTRACTOR requests in writing that other special insurance be included in the property insurance policies provided under paragraph 5.06, OWNER shall, if possible, include such insurance, and the cost thereof will be charged to CONTRACTOR by appropriate change Order or Written Amendment. Prior to commencement of the Work at the Site, OWNER shall in writing advise CONTRACTOR whether or not such other insurance has been procured by OWNER.

5.07 WAIVER OF RIGHTS

A. OWNER and CONTRACTOR intend that all policies purchased in accordance with paragraph 5.06 will protect OWNER, CONTRACTOR, Subcontractors, ENGINEER, ENGINEER's Consultants, and all other individuals or entities identified in the Supplementary Conditions to be listed as insureds or additional insureds (and the officers, directors, partners, employees, agents, and other consultants and subcontractors of each and any of them) in such policies and will provide primary coverage for all losses and damages caused by the perils or causes of loss covered thereby. All such policies shall contain provisions to the effect that in the event of payment of any loss or damage the insurers will have no rights of recovery against any of the insureds or additional insureds thereunder. OWNER and CONTRACTOR waive all rights against each other and their respective officers, directors, partners, employees, agents, and other consultants and subcontractors of each and any of them for all losses and damages caused by, arising out of, or resulting from any of the perils or causes of loss covered by such policies and any other property insurance applicable to the Work; and, in addition, waive all such rights against Subcontractors, ENGINEER, ENGINEER's Consultants, and all other individuals or entities identified in the Supplementary Conditions to be listed as insureds or additional insureds (and the officers, directors, partners, employees, agents, and other consultants and subcontractors of each and any of them) under such policies for losses and damages so caused. None of the above waivers shall extend to the rights that any party making such waiver may have to the proceeds of insurance held by OWNER as trustee or otherwise payable under any policy so issued.

B. OWNER waives all rights against CONTRACTOR, Subcontractors, ENGINEER, ENGINEER's Consultants, and the officers, directors, partners, employees, agents, and other consultants and subcontractors of each and any of them for:

1. loss due to business interruption, loss of use, or other consequential loss extending beyond direct physical loss or damage to OWNER's property or the Work caused by, arising out of, or resulting from fire or other peril whether or not insured by OWNER; and

2. loss or damage to the completed Project or part thereof caused by, arising out of, or resulting from fire or other insured peril or cause of loss covered by any property insurance maintained on the completed Project or part thereof by OWNER during partial utilization pursuant to paragraph 14.05, after Substantial Completion pursuant to paragraph 14.04, or after final payment pursuant to paragraph 14.07.

C. any insurance policy maintained by OWNER covering any loss, damage or consequential loss referred to in paragraph 5.07.B shall contain provisions to the effect that in the event of payment of any such loss, damage, or consequential loss, the insurers will have no rights of recovery against CONTRACTOR, Subcontractors, ENGINEER, or ENGINEER's Consultants and the officers, directors, partners, employees, agents, and other consultants and subcontractors of each and any of them.

5.08 RECEIPT AND APPLICATION OF INSURANCE PROCEEDS

A. Any insured loss under the policies of insurance required by paragraph 5.06 will be adjusted with OWNER and made payable to OWNER as fiduciary for the insureds, as their interests may appear, subject to the requirements of any applicable mortgage clause and of paragraph 5.08.B. OWNER shall deposit in a separate account any money so received and shall distribute it in accordance with such agreement as the parties in interest may reach. If no other special agreement is reached, the damaged Work shall be repaired or replaced, the moneys so received applied on account thereof, and the Work and the cost thereof covered by an appropriate Change Order or Written Amendment.

B. OWNER as fiduciary shall have power to adjust and settle any loss with the insurers unless one of the parties in interest shall object in writing within 15 days after the occurrence of loss to OWNER's exercise of this power. If such objection be made, OWNER as fiduciary shall make settlement with the insurers in accordance with such agreement as the parties in interest may reach. If no such agreement among the parties in interest is reached, OWNER as fiduciary shall adjust and settle the loss with the insurers and, if required in writing by any party in interest. OWNER as fiduciary shall give bond for the proper performance of such duties.

5.09 ACCEPTANCE OF BONDS AND INSURANCE; OPTION TO REPLACE

A. If either OWNER or CONTRACTOR has any objection to the coverage afforded by or other provisions of the Bonds or insurance required to be purchased and maintained by the other party in accordance with Article 5 on the basis of non-conformance with the Contract Documents, the objecting party shall so notify the other party in writing within 10 days after receipt of the certificates (or other evidence requested) required by paragraph 2.05.C. OWNER and CONTRACTOR shall each provide to the other such additional information in respect of insurance provided as the other may reasonably request. If either party does not purchase or maintain all of the Bonds and insurance required of such party by the Contract Documents, such party shall notify the other party in

writing of such failure to purchase prior to the start of the Work, or of such failure to maintain prior to any change in the required coverage. Without prejudice to any other right or remedy, the other party may elect to obtain equivalent Bonds or insurance to protect such other party's interests at the expense of the party who was required to provide such coverage, and a Change Order shall be issued to adjust the Contract Price accordingly.

5.10 PARTIAL UTILIZATION, ACKNOWLEDGMENT OF PROPERTY INSURER

A. If OWNER finds it necessary to occupy or use a portion or portions of the Work prior to Substantial Completion of all the Work as provided in paragraph 14.05, no such use or occupancy shall commence before the insurers providing the property insurance pursuant to paragraph 5.06 have acknowledged notice thereof and in writing effected any changes in coverage necessitated thereby. The insurers providing the property insurance shall consent by endorsement on the policy or policies, but the property insurance shall not be canceled or permitted to lapse on account of any such partial use or occupancy.

ARTICLE 6-CONTRACTOR'S RESPONSIBILITIES

6.01 SUPERVISION AND SUPERINTENDENCE

A. CONTRACTOR shall supervise, inspect, and direct the Work competently and efficiently, devoting such attention thereto and applying such skills and expertise as may be necessary to perform the Work in accordance with the Contract Documents. CONTRACTOR shall be solely responsible for the means, methods, techniques, sequences, and procedures of construction, but CONTRACTOR shall not be responsible for the negligence of OWNER or ENGINEER in the design or specification of a specific means, method, technique, sequence, or procedure of construction which is shown or indicated in and expressly required by the Contract Documents. CONTRACTOR shall be responsible to see that the completed Work complies accurately with the Contract Documents.

B. At all times during the progress of the Work, CONTRACTOR shall assign a competent resident superintendent thereto who shall not be replaced without written notice to OWNER and ENGINEER except under extraordinary circumstances. The superintendent will be CONTRACTOR's representative at the Site and shall have authority to act on behalf of CONTRACTOR. All communications given to or received from the superintendent shall be binding on CONTRACTOR.

6.02 LABOR; WORKING HOURS

A. CONTRACTOR shall provide competent, suitably qualified personnel to survey, lay out, and construct the Work as required by the Contract Documents. CONTRACTOR shall at all times maintain good discipline and order at the Site.

B. Except as otherwise required for the safety or protection of persons or the Work or property at the Site or adjacent thereto, and except as otherwise stated in the Contract Documents, all Work at the Site shall be performed during regular working hours, and CONTRACTOR will not permit overtime work or the performance of Work on Saturday, Sunday, or any legal holiday without OWNER's written consent (which will not be unreasonably withheld) given after prior written notice to ENGINEER.

6.03 SERVICES, MATERIALS, AND EQUIPMENT

A. Unless otherwise specified in the General Requirements, CONTRACTOR shall provide and assume full responsibility for all services, materials, equipment, labor, transportation, construction equipment and machinery, tools, appliances, fuel, power, light, heat, telephone, water, sanitary facilities, temporary facilities, and all other facilities and incidentals necessary for the performance, testing, start-up, and completion of the Work.

B. All materials and equipment incorporated into the Work shall be as specified or, if not specified, shall be of good quality and new, except as otherwise provided in the Contract Documents. All warranties and guarantees specifically called for by the Specifications shall expressly run to the benefit of OWNER. If required by ENGINEER, CONTRACTOR shall furnish satisfactory evidence (including reports of required tests) as to the source, kind, and quality of materials and equipment. All materials and equipment shall be stored, applied, installed, connected, erected, protected, used, cleaned, and conditioned in accordance with instructions of the applicable Supplier, except as otherwise may be provided in the Contract Documents.

6.04 PROGRESS SCHEDULE

A. CONTRACTOR shall adhere to the progress schedule established in accordance with paragraph 2.07 as it may be adjusted from time to time as provided below.

1. CONTRACTOR shall submit to ENGINEER for acceptance (to the extent indicated in paragraph 2.07) proposed adjustments in the progress schedule that will not result in changing the Contract Times (or Milestones). Such adjustments will conform generally to the progress schedule then in effect and additionally will comply with any provisions of the General Requirements applicable thereto.

2. Proposed adjustments in the progress schedule that will change the contract Times (or Milestones) shall be submitted in accordance with the requirements of Article 12. Such adjustments may only be made by a Change Order or Written Amendment in accordance with Article 12.

6.05 SUBSTITUTES AND "OR-EQUALS"

A. Whenever an item of material or equipment is specified or described in the Contract Documents by using the name of a proprietary item or the name of a particular Supplier, the specification or description is intended to establish the type, function, appearance, and quality required. Unless the specification or description contains or is followed by words reading that no like, equivalent, or "or-equal" item or no substitution is permitted, other items of material or equipment or material or equipment of other Suppliers may be submitted to ENGINEER for review under the circumstances described below.

1. *"Or-Equal" Items:* If in ENGINEER's sole discretion an item of material or equipment proposed by CONTRACTOR is functionally equal to that named and sufficiently similar so that no change in related Work will be required, it may be considered by ENGINEER as an "or-equal" item, in which case review and approval of the proposed item may, in ENGINEER's sole discretion, be accomplished without compliance with some or all of the requirements for approval of proposed substitute items. For the purposes of this paragraph 6.05.A.1, a proposed item of material or equipment will be considered functionally equal to an item so named if:

a. In the exercise of reasonable judgement ENGINEER determines that: (i) it is at least equal in quality, durability, appearance, strength, and design characteristics; (ii) it will reliably perform at least equally well the function imposed by the design concept of the completed Project as a functioning whole, and;

b. CONTRACTOR certifies that: (i) there is no increase in cost to the OWNER ; and (ii) it will conform

substantially, even with deviations, to the detailed requirements of the item named in the Contract Documents.

2. *Substitute Items*

a. If in ENGINEER's sole discretion an item of material or equipment proposed but CONTRACTOR does not qualify as an "or-equal" item under paragraph 6.05.A.1, it will be considered a proposed substitute item.

b. CONTRACTOR shall submit sufficient information as provided below to allow ENGINEER to determine that the item of material or equipment proposed is essentially equivalent to that named and an acceptable substitute therefor. Requests for review of proposed substitute items of material or equipment will not be accepted by ENGINEER from anyone other than CONTRACTOR.

c. The procedure for review by ENGINEER will be as set forth in paragraph 6.05.A.2.d, as supplemented in the General Requirements and as ENGINEER may decide is appropriate under the circumstances.

d. CONTRACTOR shall first make written application to ENGINEER for review of a proposed substitute item of material or equipment that CONTRACTOR seeks to furnish or use. The application shall certify that the proposed substitute item will perform adequately the functions and achieve the results called for by the general design, be similar in substance to that specified, and be suited to the same use as that specified. The application will state the extent, if any, to which the use of the proposed substitute item will prejudice CONTRACTOR's achievement of Substantial Completion on time, whether or not use of the proposed substitute item in the Work will require a change in any of the Contract Documents (or in the provisions of any other direct contract with OWNER for work on the Project) to adapt the design to the proposed substitute item and whether or not incorporation or use of the proposed substitute item in connection with the Work is subject to payment of any license fee or royalty. All variations of the proposed substitute item from that specified will be identified in the application, and available engineering, sales, maintenance, repair, and replacement services will be indicated. The application will also contain an itemized estimate of all costs or credits that will result directly or indirectly from use of such substitute item, including costs of redesign and claims of other contractors affected by any resulting change, all of which will be considered by ENGINEER in evaluating the proposed substitute item. ENGINEER may require CONTRACTOR to furnish additional data about the proposed substitute item.

B. *Substitute Construction Methods or Procedures:* If a specific means, method, technique, sequence, or procedure of construction is shown or indicated in and expressly required by the Contract Documents, CONTRACTOR may furnish or utilize a substitute means, method, technique, sequence, or procedure of construction approved by ENGINEER. CONTRACTOR shall submit sufficient information to allow ENGINEER, in ENGINEER's sole discretion, to determine that the substitute proposed is equivalent to that expressly called for by the Contract Documents. The procedure for review by ENGINEER will be similar to that provided in subparagraph 6.05.A.2.

C. *ENGINEER's Evaluation:* ENGINEER will be allowed a reasonable time within which to evaluate each proposal or submittal made pursuant to paragraphs 6.05.A and 6.05.B. ENGINEER will be the sole judge of acceptability. No "or-equal" or substitute will be ordered, installed or utilized until ENGINEER's review is complete, which will be evidenced by either a Change Order for a substitute or an approved Shop Drawing for an "or-equal." ENGINEER will advise CONTRACTOR in writing of any negative determination.

D. *Special Guarantee:* OWNER may require CONTRACTOR to furnish at CONTRACTOR's expense a special performance guarantee or other surety with respect to any substitute.

E. *ENGINEER's Cost Reimbursement:* ENGINEER will record time required by ENGINEER and ENGINEER's Consultants in evaluating substitute proposed or submitted by CONTRACTOR pursuant to paragraphs 6.05.A.2 and 6.05.B and in making changes in the contract Documents (or in the provisions of any other direct contract with OWNER for work on the Project) occasioned thereby. Whether or not ENGINEER approves a substitute item so proposed or submitted by CONTRACTOR, CONTRACTOR shall reimburse OWNER for the charges of ENGINEER and ENGINEER's Consultants for evaluating each such proposed substitute.

F. *CONTRACTOR's Expense:* CONTRACTOR shall provide all data in support of any proposed substitute or "or-equal" at CONTRACTOR's expense.

6.06 CONCERNING SUBCONTRACTORS, SUPPLIERS, AND OTHERS

A. CONTRACTOR shall not employ any Subcontractor, Supplier, or other individual or entity (including those acceptable to OWNER as indicated in paragraph 6.06.B), whether initially or as a replacement, against whom OWNER may have reasonable objection. CONTRACTOR shall not be required to employ any Subcontractor, Supplier, or other individual or entity to furnish or perform any of the Work against whom CONTRACTOR has reasonable objection.

B. If the Supplementary Conditions require the identity of certain Subcontractors, Suppliers, or other individuals or entities to be submitted to OWNER in advance for acceptance by OWNER by a specified date prior to the Effective Date of the Agreement, and if CONTRACTOR has submitted a list thereof in accordance with the Supplementary Conditions, OWNER's acceptance (either in writing or by failing to make written abjection thereto by the date indicated for acceptance or objection in the Bidding Documents or the Contract Documents) of any such Subcontractor, Supplier, or other individual or entity so identified may be revoked on the basis of reasonable objection after due investigation. CONTRACTOR shall submit as acceptable replacement for the rejected Xubcontractor, Supplier, or other individual, or entity, and the Contract Price will be adjusted by the difference in the cost occasioned by such replacement, and an appropriate Change Order will be issued or Written Amendment signed. No acceptance by OWNER of any such Subcontractor, Supplier, or other individual or entity, whether initially or as a replacement, shall constitute a waiver of any right of OWNER or ENGINEER to reject defective Work.

C. CONTRACTOR shall be fully responsible to OWNER and ENGINEER for all acts and omissions of the Subcontractors, Suppliers, and other individuals or entities performing or furnishing any of the Work just as CONTRACTOR is responsible for CONTRACTOR's own acts and omissions. Nothing in the Contract Documents shall create for the benefit of any such Subcontractor, Supplier, or other individual or entity any contractual relationship between OWNER or ENGINEER and any such Subcontractor, Supplier or other individual or entity, nor shall it create any obligation on the part of OWNER or ENGINEER to pay or to see to the payment of any moneys due any such Subcontractor, Supplier, or other individual or entity except as may otherwise be required by Laws and Regulations.

D. CONTRACTOR shall be soley responsible for scheduling and coordinating the Work of Subcontractors, Suppliers, and other

individuals or entities performing or furnishing any of the Work under a direct or indirect contract with CONTRACTOR.

E. CONTRACTOR shall require all Subcontractors, Suppliers, and such other individuals or entities performing or furnishing any of the Work to communicate with ENGINEER through CONTRACTOR.

F. The divisions and sections of the Specifications and the identifications of any Drawings shall not control CONTRACTOR in dividing the Work among Subcontractors or Suppliers or delineating the Work to be performed by any specific trade.

G. All Work performed for CONTRACTOR by a Subcontractor or Supplier will be pursuant to an appropriate agreement between CONTRACTOR and the Subcontractor or Supplier which specifically binds the Subcontractor or Supplier to the applicable terms and conditions of the Contract Documents for the benefit of OWNER and ENGINEER. Whenever any such agreement is with a Subcontractor or Supplier who is listed as an additional insured on the property insurance provided in paragraph 5.06, the agreement between the CONTRACTOR and the Subcontractor or Supplier will contain provisions whereby the subcontractor or Supplier waives all rights against OWNER, CONTRACTOR, ENGINEER, ENGINEER's Consultants, and all other individuals or entities identified in the Supplementary Conditions to be listed as insureds or additional insureds (and the officers, directors, partners, employees, agents, and other consultants and subcontractors of each and any of them) for all losses and damages caused by, arising out of, relating to, or resulting from any of the perils or causes of loss covered by such policies and any other property insurance applicable to the Work. If the insurers on any such policies require separate waiver forms to be signed by any Subcontractor or Supplier, CONTRACTOR will obtain the same.

6.07 PATENT FEES AND ROYALTIES

A. CONTRACTOR shall pay all license fees and royalties and assume all costs incident to the use in the performance of the Work or the incorporation in the Work of any invention, design, process, product, or device which is the subject of patent rights or copyrights held by others. If a particular invention, design, process, product, or devices is specified in the Contract Documents for use in the performance of the Work and if to the actual knowledge of OWNER or ENGINEER its use is subject to patent rights or copyrights calling for the payment of any license fee or royalty to others, the existence of such rights shall be disclosed by OWNER in the Contract Documents. To the fullest extent permitted by Laws and Regulations, CONTRACTOR shall indemnify and hold harmless OWNER, ENGINEER, ENGINEER's Consultants, and the officers, directors, partners, employees, or agents, and other consultants of each and any of them from and against all claims, costs, losses, and damages (including but not limited to all fees and charges of engineers, architects, attorneys, and other professionals and all court or arbitration or other dispute resolution costs) arising out of or relating to any infringement of patent rights or copyrights incident to the use in the performance of the Work or resulting from the incorporation in the Work of any invention, design, process, product, or device not specified in the Contract Documents.

6.08 PERMITS

A. Unless otherwise provided in the Supplementary Conditions, CONTRACTOR shall obtain and pay for all construction permits and licenses. OWNER shall assist CONTRACTOR, when necessary, in obtaining such permits and licenses. CONTRACTOR shall pay all governmental charges and inspection fees necessary for the prosecution of the Work which are applicable at the time of opening of Bids, or, if there are no Bids, on the Effective Date of the Agreement. CONTRACTOR shall pay all charges of utility owners for connections to the Work, and OWNER shall pay all charges of such utility owners for capital costs related thereto, such as plant investment fees.

6.09 LAWS AND REGULATIONS

A. CONTRACTOR shall give all notices and comply with all Laws and Regulations applicable to the performance of the Work. Except where otherwise expressly required by applicable Laws and Regulations, neither OWNER nor ENGINEER shall be responsible for monitoring CONTRACTOR's compliance with any Laws or Regulations.

B. If CONTRACTOR performs any Work knowing or having reason to know that it is contrary to Laws or Regulations, CONTRACTOR shall bear all claims, costs, losses, and damages (including but not limited to all fees and charges of engineers, architects, attorneys, and other professionals and all court or arbitration or other dispute resolution costs) arising out of or relating to such Work; however, it shall not be CONTRACTOR's primary responsibility to make certain that the Specifications and Drawings are in accordance with Laws and Regulations, but this shall not relieve CONTRACTOR of CONTRACTOR's obligations under paragraph 3.03.

C. Changes in the Laws or Regulations not known at the time of opening of Bids (or, on the effective Date of the Agreement if there were no Bids) having an effect on the cost or time of performance of the Work may be the subject of an adjustment in Contract Price or Contract Times. If OWNER and CONTRACTOR are unable to agree on entitlement to or on the amount or extent, if any, of any such adjustment, a Claim may be made therefor as provided in paragraph 10.05.

6.10 TAXES

A. CONTRACTOR shall pay all sales, consumer, use, and other similar taxes required to be paid by CONTRACTOR in accordance with the Laws and Regulations of the place of the Project which are applicable during the performance of the Work.

6.11 USE OF SITE AND OTHER AREAS

A. *Limitation on Use of Site and Other Areas*

1. CONTRACTOR shall confine construction equipment, the storage of materials and equipment, and the operations of workers to the Site and other areas permitted by Laws and Regulations, and shall not unreasonably encumber the Site and other areas with construction equipment or other materials or equipment. CONTRACTOR shall assume full responsibility for any damage to any such land or area, or to the owner or occupant thereof, or of any adjacent land or areas resulting from the performance of the Work.

2. Should any claim be made by any such owner or occupant because of the performance of the Work, CONTRACTOR shall promptly settle with such other party by negotiation or otherwise resolve the claim by arbitration or other dispute resolution proceeding or at law.

3. To the fullest extent permitted by Laws and Regulations, CONTRACTOR shall indemnify and hold harmless OWNER, ENGINEER, ENGINEER's Consultant, and the officers, directors, partners, employees, agents, and other consultants of each and any of them from and against all claims, costs, losses, and damages (including but not limited to all fees and charges of engineers, architects, attorneys, and other professionals and all court or arbitration or other dispute resolution costs) arising out of or relating to any claim or action, legal or equitable, brought by any such owner or occupant against OWNER, ENGINEER, or any other party

indemnified hereunder to the extent caused by or based upon CONTRACTOR 's performance of the Work.

B. *Removal of Debris During Performance of the Work:* During the progress of the Work CONTRACTOR shall keep the Site and other areas free from accumulations of waste materials, rubbish, and other debris. Removal and disposal of such waste materials, rubbish, and other debris shall conform to applicable Laws and Regulations.

C. *Cleaning:* Prior to Substantial Completion of the Work CONTRACTOR shall clean the Site and make it ready for utilization by OWNER. At the completion of the Work CONTRACTOR shall remove from the Site all tools, appliances, construction equipment and machinery, and surplus materials and shall restore to original condition all property not designated for alteration by the Contract Documents.

D. *Loading Structures:* CONTRACTOR shall not load nor permit any part of any structure to be loaded in any manner that will endanger the structure, nor shall CONTRACTOR subject any part of the Work or adjacent property to stresses or pressures that will endanger it.

6.12 RECORD DOCUMENTS

A. CONTRACTOR shall maintain in a safe place at the Site one record copy of all Drawings, Specifications, Addenda, Written Amendments, Change Orders, Work Change Directives, Field Orders, and written interpretations and clarifications in good order and annotated to show changes made during construction. These record documents together with all approved Samples and a counterpart of all approved Shop Drawings will be available to ENGINEER for reference. Upon completion of the Work, these record documents, Samples, and Shop Drawings will be delivered to ENGINEER for OWNER.

6.13 SAFETY AND PROTECTION

A. CONTRACTOR shall be solely responsible for initiating, maintaining and supervising all safety precautions and programs in connection with the Work. CONTRACTOR shall take all necessary precautions for the safety of, and shall provide the necessary protection to prevent damage, injury or loss to:

1. all persons on the Site or who may be affected by the Work;

2. all the Work and materials and equipment to be incorporated therein, whether in storage on or off the Site; and

3. other property at the Site or adjacent thereto, including trees, shrubs, lawns, walks, pavements, roadways, structures, utilities, and Underground Facilities not designated for removal, relocation, or replacement in the course of construction.

B. CONTRACTOR shall comply with all applicable Laws and Regulations relating to the safety of persons or property, or to the protection of persons or property from damage, injury, or loss; and shall erect and maintain all necessary safeguards for such safety and protection. CONTRACTOR shall notify owners of adjacent property and of Underground Facilities and other utility owners when prosecution of the Work may affect them, and shall cooperate with them in the protection, removal, relocation, and replacement of their property. All damage, injury, or loss to any property referred to in paragraph 6.13.A.2 or 6.13.A.3 caused, directly or indirectly, in whole or i n part, by CONTRACTOR, any Subcontractor, Supplier, or any other individual or entity directly or indirectly employed by any of them to perform any of the Work, or anyone for whose acts any of them may be liable, shall be remedied by CONTRACTOR (except damage or loss attributable to the fault of Drawings or Specifications or to the acts or omissions of OWNER or ENGINEER or ENGINEER's Consultant, or anyone employed by any of them, anyone for whose acts any of them may be liable, and not attributable, directly or indirectly, in whole or in part, to the fault or negligence of CONTRACTOR or any Subcontractor, Supplier, or other individual or entity directly or indirectly employed by any of them). CONTRACTOR's duties and responsibilities for safety and for protection of the Work shall continue until such time as all the Work is completed and ENGINEER has issued a notice to OWNER and CONTRACTOR in accordance with paragraph 14.07.B that the Work is acceptable (except as otherwise expressly provided in connection with Substantial Completion).

6.14 SAFETY REPRESENTATIVE

A. CONTRACTOR shall designate a qualified and experienced safety representative at the Site whose duties and responsibilities shall be the prevention of accidents and the maintaining and supervising of safety precautions and programs.

6.15 HAZARD COMMUNICATION PROGRAMS

A. CONTRACTOR shall be responsible for coordinating any exchange of material safety data sheets or other hazard communication information required to be made available to or exchanged between or among employers at the Site in accordance with Laws or Regulations.

6.16 EMERGENCIES

A. In emergencies affecting the safety or protection of persons or the Work or property at the Site or adjacent thereto, CONTRACTOR is obligated to act to prevent threatened damage, injury, or loss. CONTRACTOR shall give ENGINEER prompt written notice if CONTRACTOR believes that any significant changes in the Work or variations from the Contract Documents have been caused thereby or are required as a result thereof. If ENGINEER determines that a change in the Contract Documents is required because of the action taken by CONTRACTOR in response to such an emergency, a Work Change Directive or Change Order will be issued.

6.17 SHOP DRAWINGS AND SAMPLES

A. CONTRACTOR shall submit Shop Drawings to ENGINEER for review and approval in accordance with the acceptable schedule of Shop Drawings and Sample submittals. All submittals will be identified as ENGINEER may require and in the number of copies specified in the General Requirements. The data shown on the Shop Drawings will be complete with respect to quantities, dimensions, specified performance and design criteria, materials, and similar data to show ENGINEER the services, materials, and equipment CONTRACTOR proposes to provide and to enable ENGINEER to review the information for the limited purposes required by paragraph 6.17.E.

B. CONTRACTOR shall also submit Samples to ENGINEER for review and approval in accordance with the acceptable schedule of Shop Drawings and Sample submittals. Each Sample will be identified clearly as to material, Supplier, pertinent data such as catalog numbers, and the use for which intended and otherwise as ENGINEER may require to enable ENGINEER to review the submittal for the limited purposes required by paragraph 6.17.E. The numbers of each Sample to be submitted will be as specified in the Specifications.

C. Where a Shop Drawing or Sample is required by the Contract Documents or the schedule of Shop Drawings and Sample submittals acceptable to ENGINEER as required by paragraph 2.07, any related Work performed prior to ENGINEER's review and approval of the pertinent submittal will be at the sole expense and responsibility of CONTRACTOR.

D. *Submittal Procedures*

1. Before submitting each Shop Drawing or Sample, CONTRACTOR shall have determined and verified:

a. all field measurements, quantities, dimensions, specified performance criteria, installation requirements, materials, catalog numbers, and similar information with respect thereto;

b. all materials with respect to intended use, fabrication, shipping, handling, storage, assembly, and installation pertaining to the performance of the Work;

c. all information relative to means, methods, techniques, sequences, and procedures of construction and safety precautions and programs incident thereto; and

d. CONTRACTOR shall also have reviewed and coordinated each Shop Drawing for Sample with other Shop Drawings and Samples and with the requirements of the Work and the Contract Documents;

2. Each submittal shall bear a stamp or specific written indication that CONTRACTOR has satisfied CONTRACTOR's obligations under the Contract Documents with respect to CONTRACTOR's review and approval of that submittal.

3. At the time of each submittal, CONTRACTOR shall give ENGINEER specific written notice of such variations, if any, that the Shop Drawing or Sample submitted may have from the requirements of the Contract Documents, such notice to be in a written communication separate from the submittal; and, in addition, shall cause a specific notation to be made on each Shop Drawing and Sample submitted to ENGINEER for review and approval of each such variation.

E. *ENGINEER's Review*

1. ENGINEER will timely review and approve Shop Drawings and Samples in accordance with the schedule of Shop Drawings and Sample submittals acceptable to ENGINEER. ENGINEER's review and approval will be only to determine if the items covered by the submittals will, after installation or incorporation in the Work, conform to the information given in the Contract Documents and be compatible with the design concept of the completed Project as a functioning whole as indicated by the Contract Documents.

2. ENGINEER's review and approval will not extend to means, methods, techniques, sequences, or procedures of construction (except where a particular means, methods, technique, sequence, or procedure of construction is specifically and expressly called for by the Contract Documents) or to safety precautions or programs incident thereto. The review and approval of a separate item as such will not indicate approval of the assembly in which the item functions.

3. ENGINEER's review and approval of Shop Drawings or Samples shall not relieve CONTRACTOR from responsibility for any variation from the requirements of the Contract Documents unless CONTRACTOR has in writing called ENGINEER's attention to each such variation at the time of each submittal as required by paragraph 6.17.D.3 and ENGINEER has given written approval of each such variation by specific written notation thereof incorporated in or accompanying the Shop Drawing or Sample approval; nor will any approval by ENGINEER relieve CONTRACTOR from responsibility for complying with the requirements of paragraph 6.17.D.1.

F. *Resubmittal Procedures*

1. CONTRACTOR shall make corrections required by ENGINEER and shall return the required number of corrected copies of Shop Drawings and submit as required new Samples for review and approval. CONTRACTOR shall direct specific attention in writing to revisions other than the corrections called for by ENGINEER on previous submittals.

6.18 CONTINUING THE WORK

A. CONTRACTOR shall carry on the Work and adhere to the progress schedule during all disputes or disagreements with OWNER. No Work shall be delayed or postponed pending resolution of any disputes or disagreements, except as permitted by paragraph 15.04 or as OWNER and CONTRACTOR may otherwise agree in writing.

6.19 CONTRACTOR's GENERAL WARRANTY AND GUARANTEE

A. CONTRACTOR warrants and guarantees to OWNER, ENGINEER, and ENGINEER's Consultants that all Work will be in accordance with the Contract Documents and will not be defective. CONTRACTOR's warranty and guarantee hereunder excludes defects or damage caused by:

1. abuse, modification, or improper maintenance or operation by persons other than CONTRACTOR, Subcontractors, Suppliers, or any other individual or entity for whom CONTRACTOR is responsible; or

2. normal wear and tear under normal usage.

B. CONTRACTOR's obligation to perform and complete the Work in accordance with the Contract Documents shall be absolute. None of the following will constitute an acceptance of Work that is not in accordance with the Contract Documents or a release of CONTRACTOR's obligation to perform the Work in accordance with the Contract Documents:

1. observations by ENGINEER;

2. recommendation by ENGINEER or payment by OWNER of any progress or final payment;

3. the issuance of a certificate of Substantial Completion by ENGINEER or any payment related thereto by OWNER;

4. use or occupancy of the Work or any part thereof by OWNER;

5. any acceptance by OWNER or any failure to do so;

6. any review and approval of a Shop Drawing or Sample submittal or the issuance of a notice of acceptability by ENGINEER;

7. any inspection, test, or approval by others; or

8. any correction of defective Work by OWNER.

6.20 INDEMNIFICATION

A. To the fullest extent permitted by Laws and Regulations, CONTRACTOR shall indemnify and hold harmless OWNER, ENGINEER, ENGINEER's Consultants, and the officers directors, partners, employees, agents, and other consultants and subcontractors of each and any of them from and against all claims, costs. losses, and damages (including but not limited to all fees and charges of engineers, architects, attorneys, and other professionals and all court or arbitration or other dispute resolution costs) arising out of or relating to the performance of the Work, provided that any such claim,a cost, loss, or damage:

1. is attributable to bodily injury, sickness, disease, or death, or to injury to or destruction of tangible property (other than the Work itself), including the loss of use resulting therefrom; and

2. is caused in whole or in part by an negligent act or omission of CONTRACTOR, any Subcontractor, any Supplier, or any individual or entity directly or indirectly employed by any of them to perform any of the Work or anyone for whose acts any of them may be liable, regardless of whether or not caused in part by any negligence or omission of an individual or entity indemnified hereunder or whether liability is imposed upon such indemnified party by Laws and Regulations regardless of the negligence of any such individual or entity.

B. In any and all claims against OWNER or ENGINEER or any of their respective consultants, agents, officers, directors, partners, or employees by any employee (or the survivor or personal representative of such employee) of CONTRACTOR, any Subcontractor, any Supplier, or any individual or entity directly or indirectly employed by any of them to perform any of the Work, or anyone for whose acts any of them may be liable, the indemnification obligation under paragraph 6.20.A shall not be limited in any way by any limitation on the amount or type of damages, compensation, or benefits payable by or for CONTRACTOR or any such Subcontractor, Supplier, or other individual or entity under workers' compensation acts, disability benefit acts, or other employee benefit acts.

C. The indemnification obligations of CONTRACTOR under paragraph 6.20.A shall not extend to the liability of ENGINEER and ENGINEER's Consultants or to the officers, directors, partners employees, agents, and other consultants and subcontractors of each and any of them arising out of:

1. the preparation or approval of, or the failure to prepare or approve, maps, Drawings, opinions, reports, surveys, Change Orders, designs, or Specifications or

2. giving directions or instructions, or failing to give them, if that is the primary cause of the injury or damage.

ARTICLE 7 - OTHER WORK

7.01 RELATED WORK AT SITE

A. OWNER may perform other work related to the Project at the Site by OWNER's employees, or let other direct contracts therefor, or have other work performed by utility owners. If such other work is not noted in the Contract Documents, then:

1. written notice thereof will be given to CONTRACTOR prior to starting any such other work; and

2. if OWNER and CONTRACTOR are unable to agree on entitlement to or on the amount or extent, if any, of any adjustment in the Contract Price or Contract Times that should be allowed as a result of such other work, a Claim may be made therefor as provided in paragraph 10.05.

B. CONTRACTOR shall afford each other contractor who is a party to such a direct contract and each utility owner (and OWNER, if OWNER is performing the other work with OWNER's employees) proper and safe access to the Site and a reasonable opportunity for the introduction and storage of materials and equipment and the execution of such other work and shall properly coordinate the Work with theirs. Unless otherwise provided in the Contract Documents, CONTRACTOR shall do all cutting, fitting, and patching of the Work that may be required to properly connect or otherwise make its several parts come together and properly connect or otherwise make its several parts come together and properly integrate with such other work. CONTRACTOR shall not endanger any work of others by cutting, excavating, or otherwise altering their work and will only cut or alter their work with the written consent of ENGINEER and the others whose work will be affected, The duties and responsibilities of CONTRACTOR under this paragraph are for the benefit of such utility owners and other contractors to the extent that there are comparable provisions for the benefit of CONTRACTOR in said direct contracts between OWNER and such utility owners and other contractors.

C. If the proper execution or results of any part of CONTRACTOR's Work depends upon work performed by others under this Article 7, CONTRACTOR shall inspect such other work and promptly report to ENGINEER in writing any delays, defects, or deficiencies in such other work that render it unavailable or unsuitable for the proper execution and results of CONTRACTOR's Work. CONTRACTOR's failure to so report will constitute an acceptance of such other work as fit and proper for integration with CONTRACTOR's Work except for latent defects and deficiencies in such other work.

7.02 COORDINATION

A. If OWNER intends to contract with others for the performance of other work on the Project at the Site, the following will be set forth in Supplementary Conditions:

1. the individual or entity who will have authority and responsibility for coordination of the activities among the various contractors will be identified;

2. the specific matters to be covered by such authority and responsibility will be itemized; and

3. the extent of such authority and responsibilities will be provided.

B. Unless otherwise provided in the Supplementary Conditions, OWNER shall have sole authority and responsibility for such coordination.

ARTICLE 8 - OWNER's RESPONSIBILITIES

8.01 COMMUNICATIONS TO CONTRACTOR

A. Except as otherwise provided in these General Conditions, OWNER shall issue all communications to CONTRACTOR through ENGINEER.

8.02 REPLACEMENT OF ENGINEER

A. In case of termination of the employment of ENGINEER, OWNER shall appoint an engineer to whom CONTRACTOR makes no reasonable objection, whose status under the Contract Documents shall be that of the former ENGINEER.

8.03 FURNISH DATA

A. OWNER shall promptly furnish the data required of OWNER under the Contract Documents.

8.04 PAY PROMPTLY WHEN DUE

A. OWNER shall make payments to CONTRACTOR promptly when they are due as provided in paragraphs 14.02.C and 14.07.C.

8.05 LANDS AND EASEMENTS; REPORTS AND TESTS

A. OWNER's duties in respect of providing lands and easements and providing engineering surveys to establish reference points are set forth in paragraphs 4.01 and 4.05. Paragraph 4.02 refers to OWNER's identifying and making available to CONTRACTOR copies of reports of explorations and tests of subsurface conditions and drawings of physical conditions in or relating to existing surface or subsurface structures at or contiguous to the Site that have been utilized by ENGINEER in preparing the Contract Documents.

8.06 INSURANCE

A. OWNER's responsibilities, if any, in respect to purchasing and maintaining liability and property insurance are set forth in Article 5.

8.07 CHANGE ORDERS

A. OWNER is obligated to execute Change Orders as indicated in paragraph 10.03.

8.08 INSPECTIONS, TESTS, AND APPROVALS

A. OWNER's responsibility in respect to certain inspections, tests, and approvals is set forth in paragraph 13.03.B.

8.09 LIMITATIONS ON OWNER's RESPONSIBILITIES

A. The OWNER shall not supervise, direct, or have control or authority over, nor be responsible for, CONTRACTOR's means, methods, techniques, sequences, or procedures of construction, or the safety precautions and programs incident thereto, or for any failure of CONTRACTOR to comply with Laws and Regulations applicable to the performance of the Work. OWNER will not be responsible for CONTRACTOR's failure to perform the Work in accordance with the Contract Documents.

8.10 UNDISCLOSED HAZARDOUS ENVIRONMENTAL CONDITION

A. OWNER's responsibility in respect to an undisclosed Hazardous Environmental Condition is set forth in paragraph 4.06.

8.11 EVIDENCE OF FINANCIAL ARRANGEMENTS

A. If and to the extent OWNER has agreed to furnish CONTRACTOR reasonable evidence that financial arrangements have been made to satisfy OWNER's obligations under the Contract Documents, OWNER's responsibility in respect thereof will be as set forth in the Supplementary Conditions.

ARTICLE 9 - ENGINEER'S STATUS DURING CONSTRUCTION

9.01 OWNER'S REPRESENTATIVE

A. ENGINEER will be OWNER's representative during the construction period. The duties and responsibilities and the limitations of authority of ENGINEER as OWNER's representative during construction are set forth in the Contract Documents and will not be changed without written consent of OWNER and ENGINEER.

9.02 VISITS TO SITE

A. ENGINEER will make visits to the Site at intervals appropriate to the various stages of construction as ENGINEER deems necessary in order to observe as an experienced and qualified design professional the progress that has been made and the quality of the various aspects of CONTRACTOR's executed Work. Based on information obtained during such visits and observations, ENGINEER, for the benefit of OWNER, will determine, in general, if the Work is proceeding in accordance with the Contract Documents. ENGINEER will not be required to make exhaustive or continuous inspections on the Site to check the quality or quantity of the Work. ENGINEER's efforts will be directed toward providing for OWNER a greater degree of confidence that the completed Work will conform generally to the Contract Documents. On the basis of such visits and observations. ENGINEER will keep OWNER informed of the progress of the Work and will endeavor to guard OWNER against defective Work.

B. ENGINEER's visits and observations are subject to all the limitations on ENGINEER's authority and responsibility set forth in paragraph 9.10, and particularly, but without limitation, during or as a result of ENGINEER's visits or observations of CONTRACTOR's Work ENGINEER will not supervise, direct, control, or have authority over or be responsible for CONTRACTOR's means, methods, techniques, sequences, or procedures of construction, or the safety precautions and programs incident thereto, or for any failure of CONTRACTOR to comply with Laws and Regulations applicable to the performance of the Work.

9.03 PROJECT REPRESENTATIVE

A. If OWNER and ENGINEER agree, ENGINEER will furnish a Resident Project Representative to assist ENGINEER in providing more extensive observation of the Work. The responsibilities and authority and limitations thereon of any such Resident Project Representative and assistants will be as provided in paragraph 9.10 and in the Supplementary Conditions. If OWNER designates another representative or agent to represent OWNER at the Site who is not ENGINEER"s Consultant, agent or employee, the responsibilities and authority and limitations thereon of such other individual or entity will be as provided in the Supplementary Conditions.

9.04 CLARIFICATIONS AND INTERPRETATIONS

A. ENGINEER will issue with reasonable promptness such written clarifications or interpretations of the requirements of the Contract Documents as ENGINEER may determine necessary, which shall be consistent with the intent of and reasonably inferable from the Contract Documents. Such written clarifications and interpretations will be binding on OWNER and CONTRACTOR. If OWNER and CONTRACTOR are unable to agree on entitlement to or on the amount or extent, if any, of any adjustment in the Contract Price or Contract Times, or both, that should be allowed as a result of a written clarification or interpretation, a Claim may be made therefor as provided in paragraph 10.05.

9.05 AUTHORIZED VARIATIONS IN WORK

A. ENGINEER may authorize minor variations in the Work from the requirements of the Contract Documents which do not involve an adjustment in the Contract Price or the Contract Times and are compatible with the design concept of the competed Project as a functioning whole as indicated by the Contract Documents. These may be accomplished by a Field Order and will be binding on OWNER and also on CONTRACTOR, who shall perform the

Work involved promptly. If OWNER and CONTRACTOR are unable to agree on entitlement to or on the amount or extent, if any, of any adjustment in the Contract Price or Contract Times, or both, as a result of a Field Order, a Claim may be made therefor as provided in paragraph 10.05.

9.06 REJECTING DEFECTIVE WORK

A. ENGINEER will have authority to disapprove or reject Work which ENGINEER believes to be defective, or that ENGINEER believes will not produce a completed Project that conforms to the Contract Documents or that will prejudice the integrity of the design concept of the completed Project as a functioning whole as indicated by the Contract Documents. ENGINEER will also have authority to require special inspection or testing of the Work as provided in paragraph 13.04, whether or not the Work is fabricated, installed, or completed.

9.07 SHOP DRAWINGS, CHANGE ORDERS AND PAYMENTS

A. In connection with ENGINEER's authority as to Shop Drawings and Samples, see paragraph 6.17.

B. In connection with ENGINEER's authority as to Change Orders, see Articles 10, 11, and 12.

C. In connection with ENGINEER'S authority as to Applications for Payment, see Article 14.

9.08 DETERMINATIONS FOR UNIT PRICE WORK

A. ENGINEER will determine the actual quantities and classifications of Unit Price Work performed by CONTRACTOR. ENGINEER will review with CONTRACTOR the ENGINEER 's preliminary determinations on such matters before rendering a written decision thereon (by recommendation of an Application for Payment or otherwise). ENGINEER's written decision thereon will be final and binding (except as modified by ENGINEER to reflect changed factual conditions or more accurate data) upon OWNER and CONTRACTOR, subject to the provisions of paragraph 10.05.

9.09 DECISIONS ON REQUIREMENTS OF CONTRACT DOCUMENTS AND ACCEPTABILITY OF WORK

A. ENGINEER will be the initial interpreter of the requirements of the Contract Documents and judge of the acceptability of the Work thereunder. Claims, disputes and other matters relating to the acceptability of the Work, the quantities and classifications of Unit Price Work, the interpretation of the requirements of the Contract Documents pertaining to the performance of the Work, and Claims seeking changes in the Contract Price or Contract Times will be referred initially to ENGINEER in writing, in accordance with the provisions of paragraph 10.05, with a request for a formal decision.

B. When functioning as interpreter and judge under this paragraph 9.09, ENGINEER will not show partiality to OWNER or CONTRACTOR and will not be liable in connection with any interpretation or decision rendered in good faith in such capacity. The rendering of a decision by ENGINEER pursuant to this paragraph 9.09 with respect to any such Claim, dispute, or other matter (except any which have been waived by the making or acceptance of final payment as provided in paragraph 14.07) will be condition precedent to any exercise by OWNER or CONTRACTOR of such rights or remedies as either may otherwise have under the Contact Documents or by Laws or Regulations in respect of any such Claim, dispute, or other matter.

9.10 LIMITATIONS ON ENGINEER's AUTHORITY AND RESPONSIBILITIES

A. Neither ENGINEER's authority or responsibility under this Article 9 or under any other provision of the Contract Documents nor any decision made by ENGINEER in good faith either to exercise or not exercise such authority or responsibility or the undertaking, exercise, or performance of any authority or responsibility by ENGINEER shall create, impose, or give rise to any duty in contract, tort, or otherwise owed by ENGINEER to CONTRACTOR, any Subcontractor, any Supplier, any other individual or entity, or to any surety for or employee or agent of any of them.

B. ENGINEER will not supervise, direct, control, or have authority over or be responsible for CONTRACTOR's means, methods, techniques, sequences, or procedures of construction, or the safety precautions and programs incident thereto, or for any failure of CONTRACTOR to comply with Laws, and Regulations applicable to the performance of the Work. ENGINEER will not be responsible for the CONTRACTOR's failure to perform the Work in accordance with the Contract Documents.

C. ENGINEER will not be responsible for the acts or omissions of CONTRACTOR or of any Subcontractor, any Supplier, or of any other individual or entity performing any of the Work.

D. ENGINEER's review of the final Application for Payment and accompanying documentation and all maintenance and operating instructions, schedules, guarantees, Bonds, certificates of inspection, tests and approvals, and other documentation required by to be delivered by paragraph 14.07.A will only be to determine generally that their content complies with the requirements of, and in the case of certificates of inspections, tests, and approvals that the results certified indicate compliance with, the Contract Documents.

E. The limitations upon authority and responsibility set forth in this paragraph 9.10 shall also apply to ENGINEER's Consultants, Resident Project Representative, and assistants.

ARTICLE 10 - CHANGES IN THE WORK; CLAIMS

10.01 AUTHORIZED CHANGES IN THE WORK

A. Without invalidating the Agreement and without notice to any surety, OWNER may, at any time or from time to time, order additions, deletions, or revisions in the Work by a Written Amendment, a Change Order, or a Work Change Directive. Upon receipt of any such document, CONTRACTOR shall promptly proceed with the Work involved which will be performed under the applicable conditions of the Contract Documents (except as otherwise specifically provided).

B. If OWNER and CONTRACTOR are unable to agree on entitlement to, or on the amount or extent, if any, of an adjustment in the Contract Price or Contract Times, or both, that should be allowed as a result of a Work Change Directive, a Claim may be made therefor as provided in paragraph 10.05.

10.02 UNAUTHORIZED CHANGES IN THE WORK

A. CONTRACTOR shall not be entitled to an increase in the Contract Price or an extension of the Contract Times with respect to any work performed that is not required by the Contract Documents as amended, modified, or supplemented as provided in paragraph 3.04, except in the case of emergency as provided in paragraph 6.16 or in the case of uncovering Work as provided in paragraph 13.04.B.

10.03 EXECUTION OF CHANGE ORDERS

A. OWNER and CONTRACTOR shall execute appropriate Change Orders recommended by ENGINEER (or Written Amendments) covering:

1. changes in the Work which are: (i) ordered by OWNER pursuant to paragraph 10.01.A, (ii) required because of acceptance of defective Work under paragraph 13.08.A. or OWNER's correction of defective Work under paragraph 13.09, or (iii) agreed to by the parties;

2. changes in the Contract Price or Contract Times which are agreed to by the parties, including any undisputed sum or amount of time for Work actually performed in accordance with a Work Change Directive; and

3. changes in the Contract Price or Contract Times which embody the substance of any written decision rendered by ENGINEER pursuant to paragraph 10.05; provided that, in lieu of executing any such Change Order, an appeal may be taken from any such decision in accordance with the provisions of the Contract Documents and applicable Laws and Regulations, but during any such appeal, CONTRACTOR shall carry on the Work and adhere to the progress schedule as provided in paragraph 6.18.A.

10.04 NOTIFICATION TO SURETY

A. If notice of any change affecting the general scope of the Work or the provisions of the Contract Documents (including, but not limited to, Contract Price or Contract Times) is required by the provisions of any Bond to be given to a surety, the giving of any such notice will be CONTRACTOR's responsibility. The amount of each applicable Bond will be adjusted to reflect the effect of any such change.

10.05 CLAIMS AND DISPUTES

A. *Notice:* Written notice stating the general nature of each Claim, dispute, or other matter shall be delivered by the claimant to ENGINEER and the other party to the Contract promptly (but in no event later than 30 days) after the start of the event giving rise thereto. Notice of the amount or extent of the Claim, dispute, or other matter with supporting data shall be delivered to the ENGINEER and the other party to the Contract within 60 days after the start of such event (unless ENGINEER allows additional time for claimant to submit additional or more accurate data in support of such Claim, dispute, or other matter). A Claim for an adjustment in Contract Price shall be prepared in accordance with the provisions of paragraph 12.01.B. A Claim for an adjustment in Contract Time shall be prepared in accordance with the provisions of paragraph 12.02.B. Each Claim shall be accompanied by claimant's written statement that the adjustment claimed is the entire adjustment to which the claimant believes it is entitled as a result of said event. The opposing party shall submit any response to ENGINEER and the claimant within 30 days after receipt of the claimant's last submittal (unless ENGINEER allows additional time).

B. *ENGINEER's Decision:* ENGINEER will render a formal decision in writing within 30 days after receipt of the last submittal of the claimant or the last submittal of the opposing party, if any. ENGINEER's written decision on such Claim, dispute, or other matter will be final and binding upon OWNER and CONTRACTOR unless:

1. an appeal from ENGINEER's decision is taken within the time limits and in accordance with the dispute resolution procedures set forth in Article 16; or

2. if no such dispute resolution procedures have been set forth in Article 16, a written notice of intention to appeal from ENGINEER's written decision is delivered by OWNER or CONTRACTOR to the other and to ENGINEER within 30 days after the date of such decision, and a formal proceeding is instituted by the appealing party in a forum of competent jurisdiction within 60 days after the date of such decision or within 60 days after Substantial Completion, whichever is later (unless otherwise agreed in writing by OWNER and CONTRACTOR), to exercise such rights or remedies as the appealing party may have with respect to such Claim, dispute, or other matter in accordance with applicable Laws and Regulations.

C. If ENGINEER does not render a formal decision in writing within the time stated in paragraph 10.05.B, a decision denying the Claim in its entirety shall be deemed to have been issued 31 days after receipt of the last submittal of the claimant or the last submittal of the opposing party, if any.

D. No Claim for an adjustment in Contract Price or Contract Times (or Milestones) will be valid if not submitted in accordance with this paragraph 10.05.

ARTICLE 11 - COST OF THE WORK; CASH ALLOWANCES; UNIT PRICE WORK

11.01 COST OF THE WORK

A. *Costs Included:* The term Cost of the Work means the sum of all costs necessarily incurred and paid by CONTRACTOR in the proper performance of the Work. When the value of any Work covered by a Change Order or when a Claim for an adjustment in Contract Price is determined on the basis of Cost of the Work, the costs to be reimbursed to CONTRACTOR will be only those additional or incremental costs required because of the change in the Work or because of the event giving rise to the Claim. Except as otherwise may be agreed to in writing by OWNER, such costs shall be in amounts no higher than those prevailing in the locality of the Project, shall include only the following items, and shall not include any of the costs itemized in paragraph 11.01B.

1. Payroll costs for employees in the direct employ of CONTRACTOR in the performance of the Work under schedules of job classifications agreed upon by OWNER and CONTRACTOR. Such employees shall include without limitation superintendents, foremen, and other personnel employed full time at the Site. Payroll costs for employees not employed full time on the Work shall be apportioned on the basis of their time spent on the Work. Payroll costs shall include, but not limited to salaries, and wages plus the cost of fringe benefits, which shall include social security contributions, unemployment, excise, and payroll taxes, workers' compensation, health and retirement benefits, bonuses, sick leave, vacation and holiday pay applicable thereto. The expenses of performing Work outside of regular working hours, on Saturday, Sunday, or legal holidays, shall be included in the above to the extent authorized by OWNER.

2. Costs of all materials and equipment furnished and incorporated in the Work, including costs of transportation and storage thereof, and Suppliers' field services required in connection therewith. All cash discounts shall accrue to CONTRACTOR unless OWNER deposits funds with CONTRACTOR with which to make payments, in which case the cash discounts shall accrue to OWNER. All trade discounts, rebates and refunds and returns from sale of surplus materials and equipment shall accrue to OWNER, and CONTRACTOR shall make provisions so that they may be obtained.

3. Payments made by CONTRACTOR to Subcontractors for Work performed by Subcontractors. If required by OWNER, CONTRACTOR shall obtain competitive bids from subcontractors acceptable to OWNER and CONTRACTOR and shall deliver such bids to OWNER, who will then determine, with the advice of ENGINEER, which bids, if any, will be acceptable. If any subcontract provides that the Subcontractor is to be paid on the basis of Cost of the Work plus a fee, the Subcontractor's Cost of the Work and fee shall be determined in the same manner as CONTRACTOR's Cost of the Work and fee as provided in this paragraph 11.01.

4. Costs of special consultants (including but not limited to engineers, architects, testing laboratories, surveyors, attorneys, and accountants) employed for services specifically related to the Work.

5. Supplemental costs including the following:

a. The proportion of necessary transportation, travel, and subsistence expenses of CONTRACTOR's employees incurred in discharge of duties connected with the Work.

b. Cost, including transportation and maintenance, of all materials, supplies, equipment, machinery, appliances, office, and temporary facilities at the Site, and hand tools not owned by the workers, which are consumed in the performance of the Work, and cost, less market value, of such items used but not consumed which remain the property of CONTRACTOR.

c. Rentals of all construction equipment and machinery, and the parts thereof whether rented from CONTRACTOR or others in accordance with rental agreements approved by OWNER with the advice of ENGINEER, and the costs of transportation, loading, unloading, assembly, dismantling, and removal thereof. All such costs shall be in accordance with the terms of said rental agreements. The rental of any such equipment, machinery, or parts shall cease when the use thereof is no longer necessary for the Work.

d. Sales, consumer, use, and other similar taxes related to the Work, and for which CONTRACTOR is liable, imposed by Laws and Regulations.

e. Deposits lost for causes other than negligence of CONTRACTOR, any Subcontractor, or anyone directly or indirectly employed by any of them or for whose acts any of them may be liable, and royalty payments and fees for permits and licenses.

f. Losses and damages (and related expenses) caused by damage to the Work, not compensated by insurance or otherwise, sustained by CONTRACTOR in connection with the performance of the Work (except losses and damages within the deductible amounts of property insurance established in accordance with paragraph 5.06.D), provided such losses and damages have resulted from causes other than the negligence of CONTRACTOR, any Subcontractor, or anyone directly or indirectly employed by any of them or for whose acts any of them may be liable. Such losses shall include settlements made with the written consent and approval of OWNER. No such losses, damages, and expenses shall be included in the Cost of the Work for the purpose of determining CONTRACTOR's fee.

g. The cost of utilities, fuel and sanitary facilities at the Site.

h. Minor expenses such as telegrams, long distance telephone calls, telephone service at the Site, expressage, and similar petty cash items in connection with the Work.

i. When the Cost of the Work is used to determine the value of a Change Order or of a Claim, the cost of premiums for additional Bonds and insurance required because of the changes in the Work or caused by the event giving rise to the Claim.

j. When all the Work is performed on the basis of cost-plus, the costs of premiums for all Bonds and insurance CONTRACTOR is required by the Contract Documents to purchase and maintain.

B. *Costs Excluded:* The term Cost of the Work shall not include any of the following items:

1. Payroll costs and other compensation of CONTRACTOR's officers, executives, principals (of partnerships and sole proprietorships), general managers, engineers, architects, estimators, attorneys, auditors, accountants, purchasing and contracting agents, expediters, timekeepers, clerks, and other personnel employed by CONTRACTOR, whether at the Site or in CONTRACTOR's principal or branch office for general administration of the Work and not specifically included in the agreed upon schedule of job classifications referred to in paragraph 11.01.A.1 or specifically covered by paragraph 11.01.A.4, all of which are to be considered administrative costs covered by the CONTRACTOR's fee.

2. Expenses of CONTRACTOR's principal and branch offices other than CONTRACTOR's office at the Site.

3. Any part of CONTRACTOR's capital expenses, including interest on CONTRACTOR's capital employed for the Work and charges against CONTRACTOR for delinquent payments.

4. Costs due to the negligence of CONTRACTOR, any Subcontractor, or anyone directly or indirectly employed by any of them or for whose acts any of them may be liable, including but not limited to, the correction of defective Work, disposal of materials or equipment wrongly supplied, and making good any damage to property.

5. Other overhead or general expense costs of any kind and the costs of any item not specifically and expressly included in paragraphs 11.01.A and 11.01.B.

C. *CONTRACTOR's Fee:* When all the Work is performed on the basis of cost-plus, CONTRACTOR's fee shall be determined as set forth in the Agreement. When the value of Work covered by a Change Order or when a Claim for an adjustment in Contract Price is determined on the basis of Cost of the Work, CONTRACTOR's fee shall be determined as set forth in paragraph 12.01.C.

D. *Documentation:* Whenever the Cost of the Work for any purpose is to be determined pursuant to paragraphs 11.01.A and 11.01.B, CONTRACTOR will establish and maintain records thereof in accordance with generally accepted accounting practices and submit in a form acceptable to ENGINEER an itemized cost breakdown together with supporting data.

11.02 CASH ALLOWANCES

A. It is understood that CONTRACTOR has included in the Contract Price all allowances so named in the Contract Documents and shall cause the Work so covered to be performed for such sums as may be acceptable to OWNER and ENGINEER. CONTRACTOR agrees that:

1. the allowances include the cost to CONTRACTOR (less any applicable trade discounts) of materials and equipment required by the allowances to be delivered at the Site, and all applicable taxes; and

2. CONTRACTOR's costs for unloading and handling on the Site, labor, installation costs, overhead, profit, and other expenses contemplated for the allowances have been included in the Contract Price and not in the allowances, and no demand for additional payment on account of any of the foregoing will be valid.

B. Prior to final payment, an appropriate Change Order will be issued as recommended by ENGINEER to reflect actual amounts due CONTRACTOR on account of Work covered by allowances, and the Contract Price shall be correspondingly adjusted.

11.03 UNIT PRICE WORK

A. Where the Contract Documents provide that all or part of the Work is to be Unit Price Work, initially the Contract Price will be deemed to include for all Unit Price Work an amount equal to the sum of the unit price for each separately identified item of Unit Price Work times the estimated quantity of each item as indicated in the Agreement. The estimated quantities of items of Unit Price Work are not guaranteed and are solely for the purpose of comparison of Bids and determining an initial Contract Price. Determinations of the actual quantities and classifications of Unit Price Work performed by CONTRACTOR will be made by ENGINEER subject to the provisions of paragraph 9.08.

B. Each unit price will be deemed to include an amount considered by CONTRACTOR to be adequate to cover CONTRACTOR's overhead and profit for each separately identified item.

C. OWNER or CONTRACTOR may make a Claim for an adjustment in the Contract Price in accordance with paragraph 10.05 if:

1. the quantity of any item of Unit Price Work performed by CONTRACTOR differs materially and significantly from the estimated quantity of such item indicated in the Agreement; and

2. there is no corresponding adjustment with respect any other item of Work; and

3. if CONTRACTOR believes that CONTRACTOR is entitled to an increase in Contract Price as a result of having incurred additional expense or OWNER believes that OWNER is entitled to a decrease in Contract Price and the parties are unable to agree as to the amount of any such increase or decrease.

ARTICLE 12 - CHANGE OF CONTRACT PRICE; CHANGE OF CONTRACT TIMES

12.01 CHANGE OF CONTRACT PRICE

A. The Contract Price may only be changed by a Change Order or by a Written Amendment. Any Claim for an adjustment in the Contract Price shall be based on written notice submitted by the party making the Claim to the ENGINEER and the other party to the Contract in accordance with the provisions of paragraph 10.05.

B. The value of any Work covered by a Change Order or of any Claim for an adjustment in the Contract Price will be determined as follows:

1. where the Work involved is covered by unit prices contained in the Contract Documents, by application of such unit prices to the quantities of the items involved (subject to the provisions of paragraph 11.03); or

2. where the Work involved is not covered by unit prices contained in the Contract Documents, by a mutually agreed lump sum (which may include an allowance for overhead and profit not necessarily in accordance with paragraph 12.01.C.2); or

3. where the Work involved is not covered by unit prices contained in the Contract Documents and agreement to a lump sum is not reached under paragraph 12.01.B.2, on the basis of the Cost of the Work (determined as provided n paragraph 11.01) plus a CONTRACTOR's fee for overhead and profit (determined as provided in paragraph 12.01.C).

C. *CONTRACTOR's Fee:* The CONTRACTOR's fee for overhead and profit shall be determined as follows:

1. a mutually acceptable fixed fee; or

2. if a fixed fee is not agreed upon, then a fee based on the following percentages of the various portions of the Cost of the Work:

a. for costs incurred under paragraphs 11.01.A.1 and 11.01.A.2, the CONTRACTOR's fee shall be 15 percent;

b. for costs incurred under paragraph 11.01.A.3, the CONTRACTOR's fee shall be five percent;

c. where one or more tiers of subcontractors are on the basis of Cost of the Work plus a fee and no fixed fee is agreed upon, the intent of paragraph 12.01.C.2.a is that the Subcontractor who actually performs the Work, at whatever tier, will be paid a fee of 15 percent of the costs incurred by such Subcontractor under paragraphs 11.01.A.1 and 11.01.A.2 and that any higher tier Subcontractor and CONTRACTOR will each be paid a fee of five percent of the amount paid to the next lower tier Subcontractor;

d. no fee shall be payable on the basis of costs itemized under paragraphs 11.01.A.4, 11.01.A.5, and 11.01.B;

e. the amount of credit to be allowed by CONTRACTOR to OWNER for any change which results in a net decrease in cost will be the amount of the actual net decrease in cost plus a deduction in CONTRACTOR's fee by an amount equal to five percent of such net decrease; and

f. when both additions and credits are involved in any one change, the adjustment in CONTRACTOR's fee shall be computed on the basis of the net change in accordance with paragraphs 12.01.C.2.a through 12.01.C.2.e, inclusive.

12.02 CHANGE OF CONTRACT TIMES

A. The Contract Times (or Milestones) may only be changed by a Change Order or by a Written Amendment. Any claim for an adjustment in the Contract Times (or Milestones) shall be based on written notice submitted by the party making the claim to the ENGINEER and the other party to the Contract in accordance with the provisions of paragraph 10.05.

B. Any adjustment of the Contract Times (or Milestones) covered by a Change Order or of any Claim for an adjustment in the Contract Times (or Milestones) will be a determined in accordance with the provisions of this Article 12.

12.03 DELAYS BEYOND CONTRACTOR'S CONTROL

A. Where CONTRACTOR is prevented from completing any part of the Work within the Contract Times (or Milestones) due to delay beyond the control of CONTRACTOR, the Contract Times (or Milestones) will be extended in an amount equal to the times lost due to such delay if a Claim is made therefor as provided in paragraph 12.02.A. Delays beyond the control of CONTRACTOR shall include, but not be limited to, acts or neglect by OWNER , acts or neglect of utility owners or other contractors performing other work as contemplated by Article 7, fires, floods, epidemics, abnormal weather conditions, or acts of God.

12.04 DELAYS WITHIN CONTRACTOR'S CONTROL

A. The Contract Times (or Milestones) will not be extended due to delays within the control of CONTRACTOR. Delays attributable to and within the control of a Subcontractor or Supplier shall be deemed to be delays within the control of CONTRACTOR.

12.05 DELAYS BEYOND OWNER'S AND CONTRACTOR'S CONTROL

A. Where CONTRACTOR is prevented from a completing any part of the Work within the Contract Times (or Milestones) due to delay beyond the control of both OWNER and CONTRACTOR, an extension of the Contract Times (or Milestones) in an amount equal to the time lost due to such delay shall be CONTRACTOR's sole and exclusive remedy for such delay.

12.06 DELAY DAMAGES

A. In no event shall OWNER or ENGINEER be liable to CONTRACTOR, any Subcontractor, any Supplier, or any other person or organization, or to any surety for or employee or agent of any of them, for damages arising out of or resulting from:

1. delays caused by or within the control of CONTRACTOR; or

2. delays beyond the control of both OWNER and CONTRACTOR including but not limited to fires, floods, epidemics, abnormal weather conditions, acts of God, or acts or neglect by utility owners or other contractors performing other work as contemplated by Article 7.

B. Nothing in this paragraph 12.06 bars a change in Contract Price pursuant to this Article 12 to compensate CONTRACTOR due to delay, interference, or disruption directly attributable to actions or inactions of OWNER or anyone for whom OWNER is responsible.

ARTICLE 13 - TESTS AND INSPECTIONS; CORRECTION, REMOVAL OR ACCEPTANCE OF DEFECTIVE WORK

13.01 NOTICE OF DEFECTS

A. Prompt notice of all defective Work of which OWNER or ENGINEER has actual knowledge will be given to CONTRACTOR. All defective Work may be rejected, corrected, or accepted as provided in this Article 13.

13.02 ACCESS TO WORK

A. OWNER, ENGINEER, ENGINEER's Consultants, other representatives and personnel of OWNER, independent testing laboratories, and governmental agencies with jurisdictional interests will have access to the Site and the Work at reasonable times for their observation, inspecting, and testing. CONTRACTOR shall provide them proper and safe conditions for such access and advise them of CONTRACTOR's Site safety procedures and programs so that they may comply therewith as applicable.

13.03 TESTS AND INSPECTIONS

A. CONTRACTOR shall give ENGINEER timely notice of readiness of the Work for all required inspections, tests, or approvals and shall cooperate with inspection and testing personnel to facilitate required inspections or tests.

B. OWNER shall employ and pay for the services of an independent testing laboratory to perform all inspections, tests, or approvals required by the Contract Documents except:

1. for inspections, tests, or approvals covered by paragraphs 13.03.C and 13.03.D below;

2. that costs incurred in connection with tests or inspections conducted pursuant to paragraph 13.04.B shall be paid as provided in said paragraph 13.04.B; and

3. as otherwise specifically provided in the Contract Documents.

C. If Laws or Regulations of any public body having jurisdiction require any Work (or part thereof) specifically to be inspected, tested, or approved by an employee or other representative of such public body, CONTRACTOR shall assume full responsibility for arranging and obtaining such inspections, tests, or approvals, pay all costs in connection therewith, and furnish ENGINEER the required certificates of inspection or approval.

D. CONTRACTOR shall be responsible for arranging and obtaining and shall pay all costs in connection with any inspections, tests, or approvals required for OWNER's and ENGINEER's acceptance of materials or equipment to be incorporated in the Work; or acceptance of materials, mix designs, or equipment submitted for approval prior to CONTRACTOR's purchase thereof for incorporation in the Work. Such inspections, tests, or approvals shall be performed by organizations acceptable to OWNER and ENGINEER.

E. If any Work (or the work of others) that is to be inspected, tested, or approved is covered by CONTRACTOR without written concurrence of ENGINEER, it must, if requested by ENGINEER, be uncovered for observation.

F. Uncovering Work as provided in paragraph 13.03.E shall be at CONTRACTOR's expense unless CONTRACTOR has given ENGINEER timely notice of CONTRACTOR's intention to cover the same and ENGINEER has not acted with reasonable promptness in response to such notice.

13.04 UNCOVERING WORK

A. If any Work is covered contrary to the written request of ENGINEER, it must, if requested by ENGINEER, be uncovered for ENGINEER's observation and replaced at CONTRACTOR's expense.

B. If ENGINEER considers it necessary or advisable that covered Work be observed by ENGINEER or inspected or tested by others, CONTRACTOR, at ENGINEER's request, shall uncover, expose, or otherwise make available for observation, inspection, or testing as ENGINEER may require, that portion of the Work in question, furnishing all necessary labor, material, and equipment. If it is found that such Work is defective, CONTRACTOR shall pay all Claims, costs, losses, and damages (including but not limited to all fees and charges of engineers, architects, attorneys, and other professionals and all court or arbitration or other dispute resolution costs) arising out of or relating to such uncovering, exposure, observation, inspection, and testing, and of satisfactory replacement or reconstruction (including but not limited to all costs of repair or replacement of work of others); and OWNER shall be entitled to an appropriate decrease in the Contract Price. If the parties are unable to agree as to the amount thereof, OWNER may make a Claim therefor as provided in paragraph 10.05. If, however, such Work is not found to be defective, CONTRACTOR shall be allowed an increase in the Contract Price or an extension of the Contract Times (or Milestones), or both, directly attributable to such uncovering, exposure, observation, inspection, testing, replacement, and reconstruction. If the parties are unable to agree as to the amount or extent thereof, CONTRACTOR may make a Claim therefor as provided in paragraph 10.05.

13.05 OWNER MAY STOP THE WORK

A. If the Work is defective, or CONTRACTOR fails to supply sufficient skilled workers or suitable materials or equipment, or fails to perform the Work in such a way that the completed Work will conform to the Contract Documents, OWNER my order CONTRACTOR to stop the Work, or any portion thereof, until the cause for such order has been eliminated; however, this right of OWNER to stop the Work shall not give rise to any duty on the part of OWNER to exercise this right for the benefit of CONTRACTOR, any Subcontractor, any Supplier, any other individual, or entity, or any surety for, or employee or agent of any of them.

13.06 CORRECTION OR REMOVAL OF DEFECTIVE WORK

A. CONTRACTOR shall correct all defective Work, whether or not fabricated, installed, or completed, or, if the Work has been rejected by ENGINEER, remove it from the Project and replace it with Work that is not defective. CONTRACTOR shall pay all Claims, costs, losses, and damages (including but not limited to all fees and charges of engineers, architects, attorneys, and other professionals and all court or arbitration or other dispute resolution costs) arising out of or relating to such correction or removal (including but not limited to all costs of repair or replacement of work of others).

13.07 CORRECTION PERIOD

A. If within one year after the date of Substantial Completion or such longer period of time as may be prescribed by Laws or Regulations or by the terms of any applicable special guarantee required by the Contract Documents or by any specific provision of the Contract Documents, any Work is found to be defective, or if the repair of any damages to the land or areas made available for CONTRACTOR's use by OWNER or permitted by Laws and Regulations as contemplated in paragraph 6.11.A is found to be defective, CONTRACTOR shall promptly, without cost to OWNER and in accordance with OWNER's written instructions: (i) repair such defective land or areas, or (ii) correct such defective Work or, if the defective Work has been rejected by OWNER, remove it from the Project and replace it with Work that is not defective, and (iii) satisfactorily correct or repair or remove and replace any damage to other Work, to the work of others or other land or areas resulting therefrom. If CONTRACTOR does not promptly comply with the terms of such instructions, or in an emergency where delay would cause serious risk of loss or damage, OWNER may have the defective Work corrected or repaired or may have the rejected Work removed and replaced, and all Claims, costs, losses, and damages (including but not limited to all fees and charges of engineers, architects, attorneys, and other professionals and all court or arbitration or other dispute resolution costs) arising out of or relating to such correction or repair or such removal and replacement (including but not limited to all costs of repair or replacement of work of others) will be paid by CONTRACTOR.

B. In special circumstances where a particular item of equipment is placed in continuous service before Substantial Completion of all the Work, the correction period for that item may start to run from an earlier date if so provided in the Specifications or by Written Amendment.

C. Where defective Work (and damage to other Work resulting therefrom) has been corrected or removed and replaced under this paragraph 13.07, the correction period hereunder with respect to such Work will be extended for an additional period of one year after such correction or removal and replacement has been satisfactorily completed.

D. CONTRACTOR's obligations under this paragraph 13.07 are in addition to any other obligation or warranty. The provisions of this paragraph 13.07 shall not be construed as a substitute for a waiver of the provisions of any applicable statute of limitation or repose.

13.08 ACCEPTANCE OF DEFECTIVE WORK

A. If, instead of requiring correction or removal and replacement of defective Work, OWNER (and, prior to ENGINEER's recommendation of final payment, ENGINEER) prefers to accept it, OWNER may do so. CONTRACTOR shall pay all Claims, costs, losses, and damages (including but not limited to all fees and charges of engineers, architects, attorneys, and other professionals and all court or arbitration or other dispute resolution costs) attributable to OWNER's evaluation of and determination to accept such defective Work (such costs to be approved by ENGINEER as to reasonableness) and the diminished value of the Work to the extent not otherwise paid by CONTRACTOR pursuant to this sentence. If any such acceptance occurs prior to ENGINEER's recommendation of final payment, a Change Order will be issued incorporating the necessary revisions in the Contract Documents with respect to the Work, and OWNER shall be entitled to an appropriate decrease in the Contract Price, reflecting the diminished value of Work so accepted. If the parties are unable to agree as to the amount thereof, OWNER may make a Claim therefor as provided in paragraph 10.05. If the acceptance occurs after such recommendation, an appropriate amount will be paid CONTRACTOR to OWNER.

13.09 OWNER MAY CORRECT DEFECTIVE WORK

A. If CONTRACTOR fails within a reasonable time after written notice from ENGINEER to correct defective Work or to remove and replace rejected Work as required by ENGINEER in accordance with paragraph 13.06.A, or if CONTRACTOR fails to perform the Work in accordance with the Contract Documents, or if CONTRACTOR fails to comply with any other provision of the Contract Documents, OWNER may, after seven days written notice to CONTRACTOR, correct and remedy any such deficiency.

B. In exercising the rights and remedies under this paragraph, OWNER shall proceed expeditiously. In connection with such corrective and remedial action, OWNER may exclude CONTRACTOR from all or part of the Site, take possession of all or part of the Work and suspend CONTRACTOR's services related thereto, take possession of CONTRACTOR's tools, appliances, construction equipment and machinery at the Site, and incorporate in the Work all materials and equipment stored at the Site or for which OWNER has paid CONTRACTOR but which are stored elsewhere. CONTRACTOR shall allow OWNER, OWNER's representatives, agents and employees, OWNER's other contractors, and ENGINEER and ENGINEER's Consultants access to the Site to enable OWNER to exercise the rights and remedies under this paragraph.

C. All Claims, costs, losses, and damages (including but not limited to all fees and charges of engineers, architects, attorneys, and other professionals and all court or arbitration or other dispute resolution costs) incurred or sustained by OWNER in exercising the rights and remedies under this paragraph 13.09 will be charged against CONTRACTOR, and a Change Order will be issued incorporating the necessary revisions in the Contract Documents with respect to the Work; and OWNER shall be entitled to an appropriate decrease in the Contract Price. If the parties are unable to agree as to the amount of the adjustment, OWNER may make a Claim therefor as provided in paragraph 10.05. Such claims, costs, losses and damages will include but not be limited to all costs of repair, or replacement of work of others destroyed or damaged by correction, removal, or replacement of CONTRACTOR's defective Work.

D. CONTRACTOR shall not be allowed an extension of the Contract Times (or Milestones) because of any delay in the performance of the Work attributable to the exercise by OWNER of OWNER's rights and remedies under this paragraph 13.09.

ARTICLE 14 - PAYMENTS TO CONTRACTOR AND COMPLETION

14.01 SCHEDULE OF VALUES

A. The schedule of values established as provided in paragraph 2.07.A will serve as the basis for progress payments and will be incorporated into a form of Application for Payment acceptable to ENGINEER. Progress payments on account of Unit Price Work will be based on the number of units completed.

14.02 PROGRESS PAYMENTS

A. *Applications for Payments:*

1. At least 20 days before the date established for each progress payment (but not more often than once a month), CONTRACTOR shall submit to ENGINEER for review an Application for Payment filled out and signed by CONTRACTOR covering the Work completed as of the date of the Application and accompanied by such supporting documentation as is required by the Contract Documents. If payment is requested on the basis of materials and equipment not incorporated in the Work but delivered and suitably stored at the Site or at another location agreed to in writing, the Application for Payment shall also be accompanied by a bill of sale, invoice, or other documentation warranting that OWNER has received the materials and equipment free and clear of all Liens and evidence that the materials and equipment are covered by appropriate property insurance or other arrangements to protect OWNER's interest therein, all of which must be satisfactory to OWNER.

2. Beginning with the second Application for Payment, each Application shall include an affidavit of CONTRACTOR stating that all previous progress payments received on account of the Work have been applied on account to discharge CONTRACTOR's legitimate obligations associated with prior Applications for Payment.

3. The amount of retainage with respect to progress payments will be as stipulated in the Agreement.

B. *Review of Applications:*

1. ENGINEER will, within 10 days after receipt of each Application for Payment, either indicate in writing a recommendation of payment and present the Application to OWNER or return the Application to CONTRACTOR indicating in writing ENGINEER's reasons for refusing to recommend payment. In the latter case, CONTRACTOR may make the necessary corrections and resubmit the Application.

2. ENGINEER's recommendation of any payment requested in an Application for Payment will constitute a representation by ENGINEER to OWNER, based on ENGINEER's observations on the Site of the executed Work as an experienced and qualified design professional and on ENGINEER's review of the Application for Payment and the accompanying data and schedules, that to the best of ENGINEER's knowledge, information and belief:

a. the Work has progressed to the point indicated;

b. the quality of the Work is generally in accordance with the Contract Documents (subject to an evaluation of the Work as a functioning whole prior to or upon Substantial Completion, to the results of any subsequent tests called for in the Contract Documents, to a final determination of quantities and classifications for Unit Price Work under paragraph 9.08, and to any other qualifications stated in the recommendation); and

c. the conditions precedent to CONTRACTOR's being entitled to such payment appear to have been fulfilled in so far as it is ENGINEER's responsibility to observe the Work.

3. By recommending any such payment ENGINEER will not thereby be deemed to have represented that: (i) inspections made to check the quality or the quantity of the Work as it has been performed have ben exhaustive, extended to every aspect of the Work in progress, or involved detailed inspections of the Work beyond the responsibilities specifically assigned to ENGINEER in the Contract Documents; or (ii) that there may not be other matters or issues between the parties that might entitle CONTRACTOR to be paid additionally by OWNER or entitle OWNER to withhold payment to CONTRACTOR.

4. Neither ENGINEER's review of CONTRACTOR's Work for the purposes of recommending payments nor ENGINEER's recommendation of any payment, including final payment, will impose responsibility on ENGINEER to supervise, direct, or control the Work or for the means, methods, techniques,

sequences, or procedures of construction, or the safety precautions and programs incident thereto, or for CONTRACTOR's failure to comply with Laws and Regulations applicable to CONTRACTOR's performance of the Work. Additionally, said review or recommendation will not impose responsibility on ENGINEER to make any examination to ascertain how or for what purposes CONTRACTOR has used the moneys paid on account of the Contract Price, or to determine that title to any of the Work, materials, or equipment has passed to OWNER free and clear of any Liens.

5. ENGINEER may refuse to recommend the whole or any part of any payment if, in ENGINEER's opinion, it would be incorrect to make the representations to OWNER referred to in paragraph 14.02.B.2. ENGINEER may also refuse to recommend any such payment or, because of subsequently discovered evidence or the results of subsequent inspections or tests, revise or revoke any such payment recommendation previously made, to such extent as may be necessary in ENGINEER's opinion to protect OWNER from loss because:

a. the Work is defective, or completed Work has been damaged, requiring correction or replacement;

b. the Contract Price has been reduced by Written Amendment or Change Orders;

c. OWNER has been required to correct defective Work or complete Work in accordance with paragraph 13.09; or

d. ENGINEER has actual knowledge of the occurrence of any of the events enumerated in paragraph 15.02.A.

C. *Payment Becomes Due*

1. Ten days after presentation of the Application for Payment to OWNER with ENGINEER's recommendation, the amount recommended will (subject to the provisions of paragraph 14.02.D) become due, and when due will be paid by OWNER to CONTRACTOR.

D. *Reduction in Payment*

1. OWNER may refuse to make payment of the full amount recommended by ENGINEER because:

a. claims have been made against OWNER on account of CONTRACTOR's performance or furnishing of the Work;

b. Liens have been filed in connection with the Work, except where CONTRACTOR has delivered a specific Bond satisfactory to OWNER to secure the satisfaction and discharge of such Liens;

c. there are other items entitling OWNER to a set-off against the amount recommended; or

d. OWNER has actual knowledge of the occurrence of any of the events enumerated in paragraphs 14.02.B.5.a through 14.02.B.5.c or paragraph 15.02.A.

2. If OWNER refuses to make payment of the full amount recommended by ENGINEER, OWNER must give CONTRACTOR immediate written notice (with a copy to ENGINEER) stating the reasons for such action and promptly pay CONTRACTOR any amount remaining after deduction of the amount so withheld. OWNER shall promptly pay CONTRACTOR the amount so withheld, or any adjustment thereto agreed to by OWNER and CONTRACTOR, when CONTRACTOR corrects to OWNER's satisfaction the reason for such action.

3. If it is subsequently determined that OWNER's refusal of payment was not justified, the amount wrongfully withheld shall be treated as an amount due as determined by paragraph 14.02.C.1.

14.03 CONTRACTOR's WARRANTY OF TITLE

A. CONTRACTOR warrants and guarantees that title to all Work, materials, and equipment covered by any Application for Payment, whether incorporated in the Project or not, will pass to OWNER no later that the time of payment free and clear of all Liens.

14.04 SUBSTANTIAL COMPLETION

A. When CONTRACTOR considers the entire Work ready for its intended use CONTRACTOR shall notify OWNER and ENGINEER in writing that the entire Work is substantially complete (except for items specifically listed by CONTRACTOR as incomplete) and request that ENGINEER issue a certificate of Substantial Completion. Promptly thereafter, OWNER, CONTRACTOR, and ENGINEER shall make an inspection of the Work to determine the status of completion. If ENGINEER does not consider the Work substantially complete, ENGINEER will notify CONTRACTOR in writing giving the reasons therefore. If ENGINEER considers the Work substantially complete, ENGINEER will prepare and deliver to OWNER a tentative certificate of Substantial Completion which shall fix the date of Substantial Completion. There shall be attached to the certificate a tentative list of items to be completed or corrected before final payment. OWNER shall have seven days after receipt of the tentative certificate during which to make written objection to ENGINEER as to any provisions of the certificate or attached list. If, after considering such objections, ENGINEER concludes that the Work is not substantially complete, ENGINEER will within 14 days after submission of the tentative certificate to OWNER notify CONTRACTOR in writing, stating the reasons therefore. If, after consideration of OWNER's objections, ENGINEER considers the Work substantially complete, ENGINEER will within said 14 days execute and deliver to OWNER and CONTRACTOR a definite certificate of Substantial Completion (with a revised tentative list of items to be completed or corrected) reflecting such changes from the tentative certificate as ENGINEER believes justified after consideration of any objections from OWNER. At the time of delivery of the tentative certificate of Substantial Completion ENGINEER will deliver to OWNER and CONTRACTOR a written recommendation as to division of responsibilities pending final payment between OWNER and CONTRACTOR with respect to security, operation, safety, and protection of the Work, maintenance, heat, utilities, insurance, and warranties and guarantees. Unless OWNER and CONTRACTOR agree otherwise in writing and so inform ENGINEER in writing prior to ENGINEER's issuing the definitive certificate of Substantial Completion, ENGINEER's aforesaid recommendation will be binding on OWNER and CONTRACTOR until final payment.

B. OWNER shall have the right to exclude CONTRACTOR from the Site after the date of Substantial Completion, but OWNER shall allow CONTRACTOR reasonable access to complete or correct items on the tentative list.

14.05 PARTIAL UTILIZATION

A. Use by OWNER at OWNER's option of any substantially completed part of the Work which has specifically been identified in the Contract Documents, or which OWNER, ENGINEER, and CONTRACTOR agree constitutes a separately functioning and usable part of the Work that can be used by OWNER for its intended purpose without significant interference with CONTRACTOR's performance of the remainder of the Work, may

be accomplished prior to Substantial Completion of all the Work subject to the following conditions.

1. OWNER at any time may request CONTRACTOR in writing to permit OWNER to use any such part of the Work which OWNER believes to be ready for its intended use and substantially complete. If CONTRACTOR agrees that such part of the Work is substantially complete, CONTRACTOR will certify to OWNER and ENGINEER that such part of the Work is substantially complete and request ENGINEER to issue a certificate of Substantial Completion for that part of the Work. CONTRACTOR at any time may notify OWNER and ENGINEER in writing that CONTRACTOR considers any such part of the Work ready for its intended use and substantially complete and request ENGINEER to issue a certificate of Substantial Completion for that part of the Work. Within a reasonable time after either such request, OWNER, CONTRACTOR, and ENGINEER shall make an inspection of that part of the Work to determine its status of completion. If ENGINEER does not consider that part of the Work to be substantially complete, ENGINEER will notify OWNER and CONTRACTOR in writing giving the reasons therefore. If ENGINEER considers that part of the Work to be substantially complete, the provisions of paragraph 14.04 will apply with respect to certification of Substantial Completion of that part of the Work and the division of responsibility in respect thereof and access thereto.

2. No occupancy or separate operation of part of the Work may occur prior to compliance with the requirements of paragraph 5.10 regarding property insurance.

14.06 FINAL INSPECTION

A. Upon written notice from CONTRACTOR that the entire Work or an agreed portion thereof is complete, ENGINEER will promptly make a final inspection with OWNER and CONTRACTOR and will notify CONTRACTOR in writing of all particulars in which this inspection reveals that the Work is incomplete or defective. CONTRACTOR shall immediately take such measures as are necessary to complete such Work or remedy such deficiencies.

14.07 FINAL PAYMENT

A. *Application for Payment*

1. After CONTRACTOR has, in the opinion of ENGINEER, satisfactorily completed all corrections identified during the final inspection and has delivered, in accordance with the Contract Documents, all maintenance and operating instructions, schedules, guarantees, Bonds certificates or other evidence of insurance certificates of inspection, marked-up record documents (as provided in paragraph 6.12), and other documents, CONTRACTOR may make application for final payment following the procedure for progress payments.

2. The final Application for Payment shall be accompanied (except as previously delivered) by: (i) all documentation called for in the Contract Documents, including but not limited to the evidence of insurance required by subparagraph 5.04.B.7; (ii) consent of the surety, if any, to final payment; and (iii) complete and legally effective releases or waivers (satisfactory to OWNER) of all Lien rights arising out of or Liens filed in connection with the Work.

3. In lieu of the releases or waivers of Liens specified in paragraph 14.07.A.2 and as approved by OWNER, CONTRACTOR may furnish receipts or releases in full and an affidavit of CONTRACTOR that: (i) the releases and receipts include all labor, services, material, and equipment for which a Lien could be filed; and (ii) all payrolls, material and equipment bills, and other indebtedness connected with the Work for which OWNER or OWNER's property might in any way be responsible have been paid or otherwise satisfied. If any Subcontractor or Supplier fails to furnish such a release or receipt in full, CONTRACTOR may furnish a Bond or other collateral satisfactory to OWNER to indemnify OWNER against any Lien.

B. *Review of Application and Acceptance*

1. If, on the basis of ENGINEER's observation of the Work during construction and final inspection, and ENGINEER's review of the final Application for Payment and accompanying documentation as required by the Contract Documents, ENGINEER is satisfied that the Work has been completed and CONTRACTOR's other obligations under the Contract Documents have been fulfilled, ENGINEER will, within ten days after receipt of the final Application for Payment, indicate in writing ENGINEER's recommendation of payment and present the Application for Payment to OWNER for payment. At the same time ENGINEER will also give written notice to OWNER and CONTRACTOR that the Work is acceptable subject to the provisions of paragraph 14.09. Otherwise, ENGINEER will return the Application for Payment to CONTRACTOR, indicating in writing the reasons for refusing to recommend final payment, in which case CONTRACTOR shall make the necessary corrections and resubmit the Application for Payment.

C. *Payment Becomes Due*

1. Thirty days after the presentation to OWNER of the Application for Payment and accompanying documentation, the amount recommended by ENGINEER will become due and, when due, will be paid by OWNER to CONTRACTOR.

14.08 FINAL COMPLETION DELAYED

A. If, through no fault of CONTRACTOR, final completion of the Work is significantly delayed, and if ENGINEER so confirms, OWNER shall, upon receipt of CONTRACTOR's final Application for Payment and recommendation of ENGINEER, and without terminating the Agreement, make payment of the balance due for that portion of the Work fully completed and accepted. If the remaining balance to be held by OWNER for Work not fully completed or corrected is less than the retainage stipulated in the Agreement, and if Bonds have been furnished as required in paragraph 5.01, the written consent of the surety to the payment of the balance due for that portion of the Work fully completed and accepted shall be submitted by CONTRACTOR to ENGINEER with the Application for such payment. Such payment shall be made under the terms and conditions governing final payment, except that it shall not constitute a waiver of Claims.

14.09 WAIVER OF CLAIMS

A. The making and acceptance of final payment will constitute:

1. a waiver of all Claims by OWNER against CONTRACTOR, except Claims arising from unsettled Liens, from defective Work appearing after final inspection pursuant to paragraph 14.06, from failure to comply with the Contract Documents or the terms of any special guarantees specified therein, or from CONTRACTOR's continuing obligations under the Contract Documents; and

2. a waiver of all Claims by CONTRACTOR against OWNER other than those previously made in writing which are still unsettled.

ARTICLE 15 - SUSPENSION OF WORK AND TERMINATION

15.01 *OWNER* MAY SUSPEND WORK

A. At any time and without cause, OWNER may suspend the Work or any portion thereof for a period of not more than 90 consecutive days by notice in writing to CONTRACTOR and ENGINEER which will fix the date on which Work will be resumed. CONTRACTOR shall resume the Work on the date so fixed. CONTRACTOR shall be allowed an adjustment in the Contract Price or an extension of the Contract Times, or both, directly attributable to any such suspension if CONTRACTOR makes a Claim therefor as provided in paragraph 10.05.

15.02 *OWNER* MAY TERMINATE FOR CAUSE

A. The occurrence of any one or more of the following events will justify termination for cause:

1. CONTRACTOR's persistent failure to perform the Work in accordance with the Contract Documents (including, but not limited to, failure to supply sufficient skilled workers or suitable materials or equipment or failure to adhere to the progress schedule established under paragraph 2.07 as adjusted from time to time pursuant to paragraph 6.04);

2. CONTRACTOR's disregard of Laws or Regulations of any public body having jurisdiction;

3. CONTRACTOR's disregard of the authority of ENGINEER; or

4. CONTRACTOR's violation in any substantial way of any provisions of the Contract Documents.

B. If one or more of the events identified in paragraph 15.02.A occur, OWNER may, after giving CONTRACTOR (and the surety, if any) seven days written notice, terminate the services of CONTRACTOR, exclude CONTRACTOR from the Site, and take possession of the Work and of all CONTRACTOR's tools, appliances, construction equipment, and machinery at the Site, and use the same to the full extent they could be used by CONTRACTOR (without liability to CONTRACTOR for trespass or conversion), incorporate in the Work all materials and equipment stored at the Site or for which OWNER has paid CONTRACTOR but which are stored elsewhere, and finish the Work as OWNER may deem expedient. In such case, CONTRACTOR shall not be entitled to receive any further payment until the Work is finished. If the unpaid balance of the Contract Price exceeds all claims, costs, losses, and damages (including but not limited to all fees and charges of engineers, architects, attorneys, and other professionals and all court or arbitration or other dispute resolution costs) sustained by OWNER arising out of or relating to completing the Work, such excess will be paid to CONTRACTOR. If such claims, costs, losses, and damages exceed such unpaid balance, CONTRACTOR shall pay the difference to OWNER. Such claims, costs, losses, and damages incurred by OWNER will be reviewed by ENGINEER as to their reasonableness and, when so approved by ENGINEER, incorporated in a Change Order. When exercising any rights or remedies under this paragraph OWNER shall not be required to obtain the lowest price for the Work performed.

C. Where CONTRACTOR's services have been so terminated by OWNER, the termination will not affect any rights or remedies of OWNER against CONTRACTOR then existing or which may thereafter accrue. Any retention or payment of moneys due CONTRACTOR by OWNER will not release CONTRACTOR from liability.

15.03 *OWNER* MAY TERMINATE FOR CONVENIENCE

A. Upon seven days written notice to CONTRACTOR and ENGINEER, OWNER may, without cause and without prejudice to any other right or remedy of OWNER, elect to terminate the Contract. In such case, CONTRACTOR shall be paid (without duplication of any items):

1. for completed and acceptable Work executed in accordance with the Contract Documents prior to the effective date of termination, including fair and reasonable sums for overhead and profit on such Work;

2. for expenses sustained prior to the effective date of termination in performing services and furnishing labor, materials, or equipment as required by the Contract Documents in connection with uncompleted Work, plus fair and reasonable sums for overhead and profit on such expenses;

3. for all claims, costs, losses, and damages (including but not limited to all fees and charges of engineers, architects, attorneys, and other professionals and all court or arbitration or other dispute resolution costs) incurred in settlement of terminated contracts with Subcontractors, Suppliers, and others; and

4. for reasonable expenses directly attributable to termination.

B. CONTRACTOR shall not be paid on account of loss of anticipated profits or revenue or other economic loss arising out of or resulting rom such termination.

15.04 *CONTRACTOR* MAY STOP WORK OR TERMINATE

A. If, through no act or fault of CONTRACTOR, the Work is suspended for more than 90 consecutive days by OWNER or under an order of court or other public authority, or ENGINEER fails to act on any Application for Payment within 30 days after it is submitted, or OWNER fails for 30 days to pay CONTRACTOR any sum finally determined to be due, then CONTRACTOR may, upon seven days written notice to OWNER and ENGINEER, and provided OWNER or ENGINEER do not remedy such suspension or failure within that time, terminate the Contract and recover from OWNER payment on the same terms as provided in paragraph 15.03. In lieu of terminating the Contract and without prejudice to any other right or remedy, if ENGINEER has failed to act on an Application for Payment within 30 days after it is submitted, or OWNER has failed for 30 days to pay CONTRACTOR any sum finally determined to be due, CONTRACTOR may, seven days after written notice to OWNER and ENGINEER, stop the Work until payment is made of all such amounts due CONTRACTOR, including interest thereon. The provisions of this paragraph 15.04 are not intended to preclude CONTRACTOR from making a Claim under paragraph 10.05 for an adjustment in Contract Price or Contract Times or otherwise for expenses or damage directly attributable to CONTRACTOR's stopping the Work as permitted by this paragraph.

ARTICLE 16 - DISPUTE RESOLUTION

16.01 METHODS AND PROCEDURES

A. Dispute resolution methods and procedures, if any, shall be as set forth in the Supplementary Conditions. If no method and procedure has been set forth, and subject to the provisions of paragraphs 9.09 and 10.05, OWNER and CONTRACTOR may exercise such rights or remedies as either may otherwise have under the Contract Documents or by Laws or Regulations in respect of any dispute.

ARTICLE 17 - MISCELLANEOUS

17.01 GIVING NOTICE

A. Whenever any provisions of the Contract Documents requires the giving of written notice, it will be deemed to have been validly given if delivered in person to the individual or to a member of the firm or to an officer of the corporation for whom it is intended, or if delivered at or sent by registered or certified mail, postage prepaid, to the last business address known to the giver of the notice.

17.02 COMPUTATION OF TIMES

A. When any period of time is referred to in the Contract Documents by days, it will be computed to exclude the first and include the last day of such period. If the last day of any such period falls on a Saturday or Sunday or on a day made a legal holiday by the law of the applicable jurisdiction, such day will be omitted from the computation.

17.03 CUMULATIVE REMEDIES

A. The duties and obligations imposed by these General Conditions and the rights and remedies available hereunder to the parties hereto are in addition to, and are not to be construed in any way as a limitation of, any rights and remedies available to any or all of them which are otherwise imposed or available by Laws or Regulations, by special warranty or guarantee, or by other provisions of the Contract Documents, and the provisions of this paragraph will be as effective as if repeated specifically in the Contract Documents in connection with each particular duty, obligation, right, and remedy to which they apply.

17.04 SURVIVAL OF OBLIGATIONS

A. All representations, indemnifications, warranties, and guarantees made in, required by, or given in accordance with the Contract Documents, as well as all continuing obligations indicated in the Contract Documents, will survive final payment, completion, and acceptance of the Work or termination or completion of the Agreement.

17.05 CONTROLLING LAW

A. This Contract is to be governed by the law of the state in which the Project is located.

SECTION II-D

SUPPLEMENTARY CONDITIONS

WASATCH CIVIL

Consulting Engineering

Supplementary Conditions

The General Conditions of the Contract are herewith modified as follows:

Article 2-C, Evidence of Insurance shall be modified to read " Before any work at the Site is started, CONTRACTOR shall deliver to the OWNER, with copies to the ENGINEER, certificates of insurance which CONTRACTOR is required to purchase and maintain in accordance with Article 5.

Article 4.02, All existing underground utilities have not been identified on the plans. Contractor will be responsible to determine location of each utility prior to commencement of construction.

Article 4.05, Reference Points - shall be revised to require OWNER to provide all construction survey staking and lay-out. Each item of work will be staked once by OWNER'S surveyor. Re-staking will be at CONTRACTOR'S expense. Three working days notice shall be given for all survey work.

Article 5.04, The insurance required by this paragraph 5.04 shall include the specific coverage and be written for not less than the limits of liability and coverage as follows: (or required by law, whichever is greater). The commercial general liability insurance shall provide minimum coverage of **$1,000,000.00** per occurrence with a **$2,000,000.00** aggregate. The Commercial general liability insurance and the automobile liability insurance shall include as additional insured the OWNER and each of his officers, agents, volunteers and employees. Coverage shall state that insurance shall apply separately to each insured against whom claim is made or suit is brought, except with respect to the limits of the insurer's liability. All insurance required in this paragraph shall contain a provision the coverage afforded will not be canceled, materially changed or renewal refused until at least thirty days prior written notice by certified mail, return receipt requested, has been given to OWNER and ENGINEER. Should any policy be canceled before final payment by the OWNER to CONTRACTOR, and CONTRACTOR fails immediately to procure other insurance as specified, OWNER reserves the right to procure such insurance and to deduct the cost thereof from any sum due the CONTRACTOR under this contract. All such insurance shall remain in effect until final payment and at all times thereafter when CONTRACTOR may be correcting, removing or replacing defective Work in accordance with paragraph 13.07. In addition, CONTRACTOR shall maintain completed operations insurance for at least two years after final payment and furnish OWNER with evidence of continuation of such insurance at final payment and one year thereafter.

Article 5.06 - Property Insurance: In lieu of Owner providing property insurance, CONTRACTOR shall acquire Builders' Risk "All-Risk" Completed Value insurance coverage upon the entire project which is the subject of this Contract including completed Work, Work in the progress, Work stored on and off the site and Work in transit. This work shall include the interests of OWNER, CONTRACTOR and Subcontractors in the Work, shall insure against the perils of fire and extended coverage and shall include "all-risk" insurance for physical loss and damage including theft, vandalism and malicious mischief, collapse and water damage, and such other perils as may be provided in the Supplementary Conditions, and shall include damages, losses and expenses arising out of or resulting from any insured loss or incurred in the repair or replacement of any insured property (including fees and charges of engineers, architects, attorneys and other professionals). Such insurance shall include as additional insured the OWNER and each of his officers, employees, agents and volunteers. All insurance required in this paragraph shall contain a provision that the coverage afforded will not be canceled, materially changed or renewal refused until at least thirty days prior written notice by certified mail, return receipt requested, has been given to OWNER and ENGINEER. Should any policy be canceled before final payment by the OWNER to the CONTRACTOR, and CONTRACTOR fails immediately to procure other insurance as specified, OWNER reserves the right to procure such insurance and to deduct the cost thereof from any sum due the CONTRACTOR under this contract.

1. Article 13.03B, Tests and Inspections - shall be revised to require the contractor to employ and pay for the services an independent testing laboratory to perform inspections and tests for soil compaction.

Other conditions pertaining to the contract are as follows:

2. Work on State, County and City Roads: The Owner will obtain all required licenses for construction on State, County or City Roads, but securing digging permits and posting required bonds will be the responsibility and at the expense of the CONTRACTOR.

3. Public Convenience and Safety: During the progress of the work, adequate provisions shall be made by the CONTRACTOR to accommodate the normal traffic over the road or street being used as to cause a minimum inconvenience to the public. Means of ingress and egress for occupants of property adjacent to the work, with convenient access to driveways, houses and buildings shall be provided when applicable.

4. Clean-up: Throughout all phases of construction, the CONTRACTOR shall keep the construction areas in a clean condition free from rubbish and debris. All materials and equipment required in connection with construction of any portion of the work shall be removed from the site as soon as the use of said materials and equipment at that location is no longer necessary, and the area shall be thoroughly cleaned.

   Care shall be taken to prevent spillage on streets over which hauling is done and any such spillage or debris deposited on streets due to the CONTRACTOR'S operations shall be immediately removed.

   Upon completion of the work and prior to final inspection, the entire site shall be cleared of equipment, unused materials, and rubbish so as to present a clean and neat appearance satisfactory to the ENGINEER.

5. Protection of Existing Utilities: CONTRACTOR shall take precautions to protect existing utilities during construction activities,

6. Measurement and Payment: Measurement and payment for all work shall be defined in the bid bond. The OWNER reserves the right to increase or decrease, or eliminate certain items from the work if found desirable or expedient, and the CONTRACTOR is cautioned against un-balancing his bid, disproportionate to actual unit item values. The contractor will be allowed no claims for anticipated profits, loss of profits or for damages because of differences between the estimated and the actual amounts of work done, or materials furnished or used in the completed project.

7. Guarantee: The CONTRACTOR warrants and guarantees that the materials and workmanship of the improvements provided for hereunder, and every part thereof, remain in good condition for a period of one year after the date of completion and conditional acceptance by the OWNER, and agrees to make all repairs to, and maintain the improvements and every part thereof, in good conditions during the time with no cost to the OWNER; and the bonds shall remain in full force until conditions of this contract are fulfilled.

SECTION II-E

TECHNICAL SPECIFICATIONS

WASATCH CIVIL

Consulting Engineering

Technical Specifications
Reference Standards

Work will conform to *APWA Manual of Standard Specifications 2017 Edition*, with changes, amendments, additions and standard drawings as adopted by North Ogden City and Presented in *Public Works Standards and Technical Specifications North Ogden City Corporation*.

References:

1. APWA Technical Specifications from the Manual of Standard Specifications, 2017 Edition, (with modifications and standard drawings as adopted by North Ogden City) is incorporated herein by reference.
2. *North Ogden Public Works Standards* are incorporated herein by reference. If there are inconsistencies between the two documents, the later reference shall apply.

SECTION II-F

DRAWINGS

WASATCH CIVIL

Consulting Engineering

NORTH OGDEN

400 EAST WATERLINE PROJECT

AUGUST 2021

N

SCALE:1"=200'

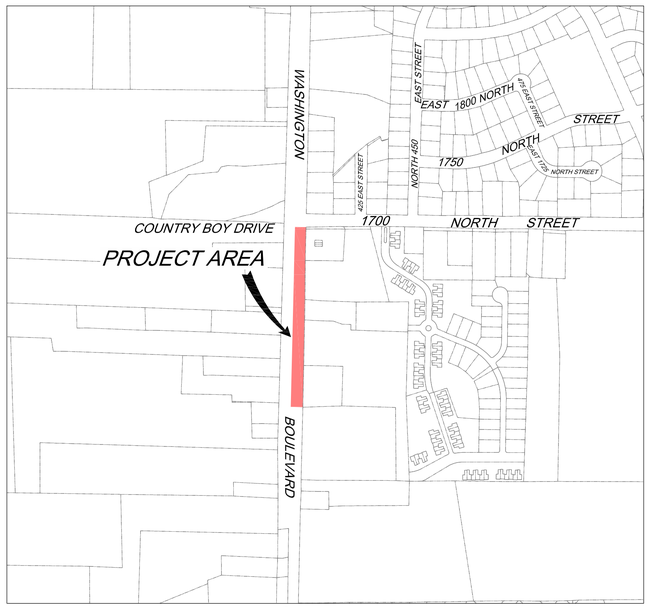

VICINITY MAP

NORTH OGDEN CITY
SETTLED 1851

DRAWINGS

1. COVER SHEET

2. SITE PLAN

SUPPLEMENTAL DRAWINGS

RD-02 PUBLIC ROADS- TYPICAL DRIVE APPROACH DETAILS

RD-04 PUBLIC ROADS- TYPICAL ADA RAMP & DEFECTIVE CONCRETE REPLACEMENT DETIALS

CW-01 CULINARY WATER- RESIDENTIAL WATER SERVICE, 1 $\frac{1}{2}$" & 2" METER STATION, & PIPE TRENCH DETAILS

CW-02 CULINARY WATER- THRUST BLOCK, WATERLINE LOOP, FLUSH VALVE, & FIRE HYDRANT DETAILS

CW-03 CULINARY WATER- TRACING WIRE INSTALLATION DETAILS

LEGEND

W	PROPOSED CULINARY WATER
SS	SANITARY SEWER
SD	STORM DRAIN PIPE
W	CULINARY WATER
G	QUESTAR IHP GAS LINE
T	QWEST COMMUNICATION LINES
O.H.P. / U.G.P.	ROCKY MOUNTAIN POWER
4263	FINISHED GRADE CONTOUR
(4263)	EXISTING CONTOURS
	ASPHALT PAVING
	PROPOSED CONCRETE
	EXISTING GRAVEL
	EXISTING ASPHALT
SL	STREET LIGHT
PP	POWER POLE
PB	POWER BOX
SS	EXISTING STREET SIGN
WM	WATER METER
MH	MANHOLE
CO	CLEAN OUT
CB	CATCH BASIN
WV	WATER VALVE
FH	FIRE HYDRANT

STA	PROJECT STATIONING
PVI	POINT OF VERTICAL INTERSECTION
BCR	BEGINNING OF CURB RADIUS
ECR	END OF CURB RADIUS
PRC	POINT OF REVERSE CURVATURE
PCC	POINT OF COMPOUND CURVATURE
PC	POINT OF CURVATURE
PT	POINT OF TANGENCY
BW	BACK OF WALK ELEVATION
EA	EDGE OF ASPHALT ELEVATION
TA	TOP OF ASPHALT
TBC	TOP BACK OF CURB
TMC	TOP BACK OF MOUNTABLE CURB
TDC	TOP OF DEPRESSED CURB
HP	HIGH POINT
LP	LOW POINT
GB	GRADE BREAK
TG	TOP OF GRATE
FL	FLOW LINE
LIP	LIP OF GUTTER
R.D.	ROOF DRAIN
L.F.	LINEAL FEET
EC	EDGE OF CONCRETE
DRV	DRIVE WAY
TW	TOP OF WALL
TC	TOP OF CURB WALL
DR	DRAIN

LICENSED PROFESSIONAL ENGINEER
NO. 270657
JOHN D. BJERREGAARD
STATE OF UTAH

GENERAL NOTES:

1. ALL WORK SHALL COMPLY WITH THE NORTH OGDEN CITY AND U.D.O.T. STANDARDS.
2. CONTRACTOR IS RESPONSIBLE TO OBTAIN & PAY FOR ALL REQUIRED CONSTRUCTION PERMITS PRIOR TO BEGINNING WORK.
3. THE LOCATION OF EXISTING UTILITIES SHOWN ON THE PROJECT DRAWINGS HAVE BEEN LOCATED FROM A LIMITED SITE SURVEY AND FROM AVAILABLE INFORMATION. IT IS THE CONTRACTOR'S RESPONSIBILITY TO DETERMINE THE EXACT LOCATION OF ALL EXISTING UTILITIES PRIOR TO BEGINNING WORK. CONTRACTOR SHALL NOTIFY THE DESIGN ENGINEER IMMEDIATELY IF A UTILITY LINE LOCATION DIFFERS FROM THE DESIGN DRAWINGS OR IF AN UNANTICIPATED UTILITY LINE IS DISCOVERED.
4. THE CONTRACTOR SHALL PROVIDE ALL TRAFFIC CONTROL PERSONNEL AND SIGNAGE REQUIRED FOR WORK WITHIN EXISTING RIGHTS OF WAY.
5. THE CONTRACTOR IS RESPONSIBLE TO PROVIDE DUST CONTROL & CLEAN-UP OF EXISTING STREETS.
6. THE CONTRACTOR SHALL EXERCISE CAUTION TO VERIFY VALUES SHOWN ON THE PLANS, CONSTRUCTION STAKES AND/OR CUT SHEETS. ANY DISCREPANCIES FOUND BETWEEN THE DRAWINGS, GRADES, SPECIFICATIONS AND SITE CONDITIONS OR ANY INCONSISTENCIES, AMBIGUITIES, OR OTHERWISE APPARENT GRADING PROBLEMS SHALL BE IMMEDIATELY REPORTED TO THE DESIGN ENGINEER WHO WILL PROMPTLY CORRECT SAID INCONSISTENCIES OR AMBIGUITIES IN WRITING. ALL GRADES AND FORMS MUST BE INSPECTED AND APPROVED BEFORE PLACING CONCRETE. WORK DONE BY THE CONTRACTOR AFTER HIS DISCOVERY OF SUCH DISCREPANCIES, INCONSISTENCIES OR AMBIGUITIES OR WITHOUT PROPER INSPECTION SHALL BE AT THE CONTRACTOR'S RISK AND EXPENSE TO CORRECT.
7. THE CONTRACTOR SHALL POTHOLE EXISTING UTILITIES AT LOCATIONS OF POTENTIAL GRADE CONFLICTS. COORDINATE WITH THE UTILITY OWNERS FOR UTILITY ADJUSTMENTS AND RELOCATIONS.
8. CONTRACTOR SHALL BE RESPONSIBLE FOR REESTABLISHING SPRINKLER SYSTEMS, LANDSCAPING AND TOP SOIL.
9. CONTRACTOR IS REQUIRED TO GET ALL PERMITS REQUIRED FROM U.D.O.T.

WASATCH CIVIL
Consulting Engineering
1150 SOUTH DEPOT DRIVE, SUITE 225
OGDEN, UT 84404 (801) 775-9191

Q:\WCE-CAD - DOCUMENTS\08-NORTH-OGDEN\100-WATER\400 EAST\DWG\COVER.DWG 8/20/2021 10:49:34 AM

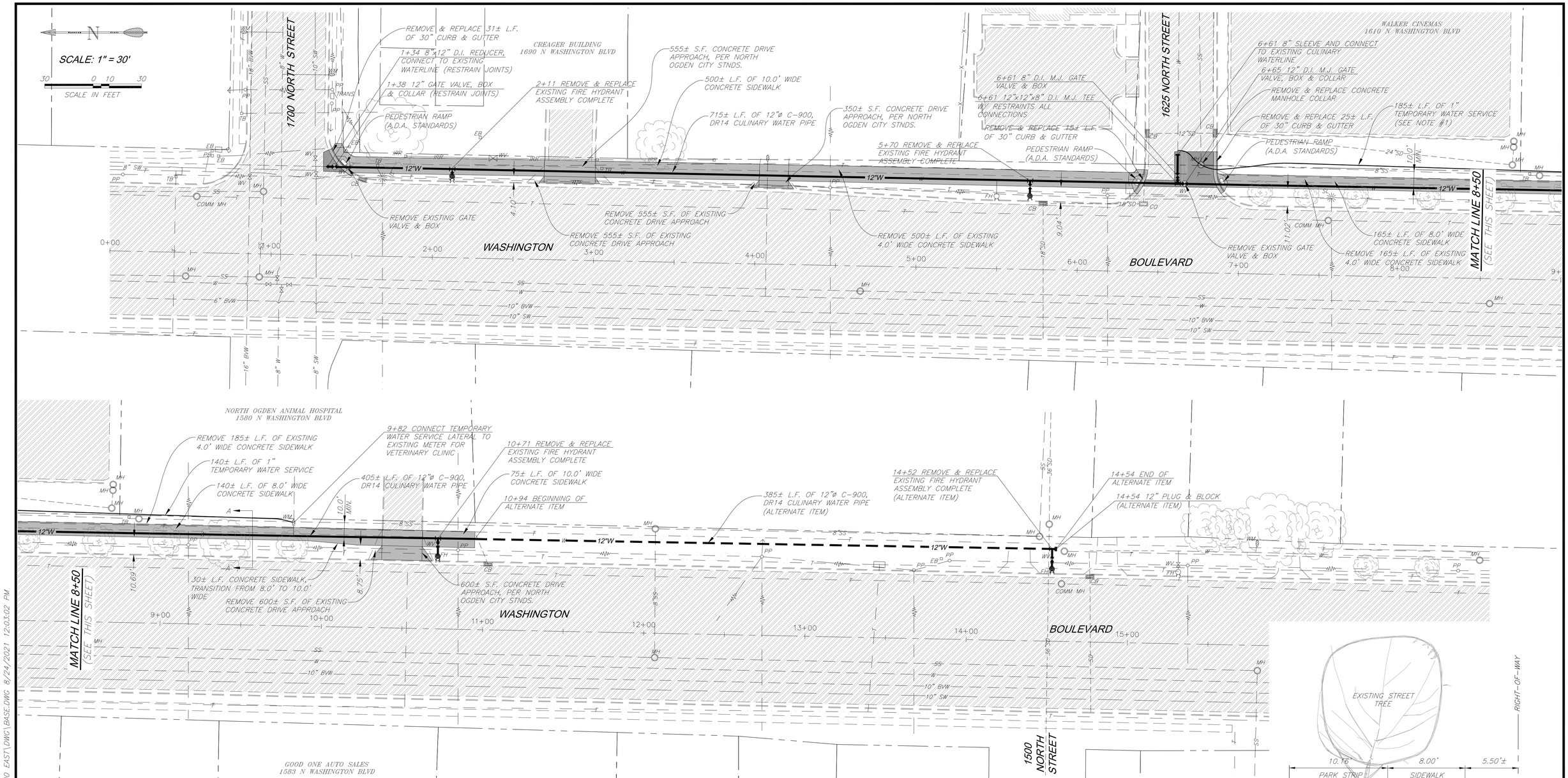

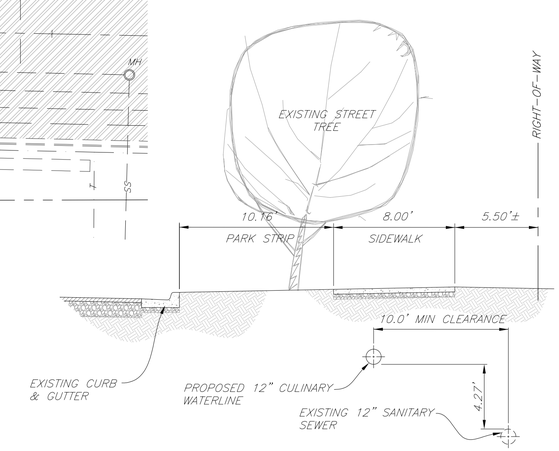

CROSS SECTION A-A

SCALE: 1" = 5'

WATERLINE REPLACEMENT WORK SEQUENCE:

THE EXISTING NORTH OGDEN WATERLINE IN WASHINGTON BLVD BETWEEN 1700 NORTH AND 1525 NORTH CAN BE SHUT DOWN BY CONSTRUCTING A TEMPORARY WATER SERVICE TO 1580 NORTH AND PROVIDING A TEMPORARY PLUG AT THE INTERSECTION OF 1625 NORTH STREET. THE ANTICIPATED WORK SEQUENCE IS OUTLINED BELOW:

1. CONSTRUCT A TEMPORARY 1" WATER SERVICE (POLY PIPE, NSF 61 CERT.) FROM 1625 NORTH STREET TO THE EXISTING METER AT 1580 NORTH.
2. TEMPORARILY CUT AND PLUG THE 8" DIAMETER WATERLINE IN 1625 NORTH STREET BETWEEN THE TEMPORARY SERVICE CONNECTION AND THE EXISTING TEE AT WASHINGTON BLVD.
3. SHUTDOWN THE WATERLINE AT 1700 NORTH AND CONSTRUCT A NEW 12" X 8" REDUCER AND 12" VALVE.
4. PROCEED WITH CONSTRUCTION OF THE NEW 12-INCH DIA. WATERLINE AND REMOVAL OF THE EXISTING 8-INCH DIA. WATERLINE FROM STA. 1+34 TO STA. 14+54.
5. COMPLETE PRESSURE TESTING AND DISINFECTION.
6. CONNECT THE WATER SERVICE AT 1580 NORTH TO THE NEW 12-INCH DIAMETER WATERLINE.
7. CONSTRUCT THE CONNECTION AT 1625 NORTH AND REMOVE THE TEMPORARY SERVICE. REMOVE AND ABANDON THE TEMPORARY SERVICE CONNECTION WITH A BRASS PLUG AT THE MAIN.

LICENSED PROFESSIONAL ENGINEER
NO. 270657
JOHN D. BJERREGAARD
STATE OF UTAH
SURVEYOR'S STAMP

WASATCH CIVIL
Consulting Engineering
1150 SOUTH DEPOT DRIVE, SUITE 225
OGDEN, UT 84404 (801) 775-9191

REV.	DATE	APPR.

DESIGNED M.M. DATE APR 26, 2021
DRAWN T.B.G. SCALE: 1" = 30'
CHECKED J.D.B.

NORTH OGDEN CITY

400 EAST WATERLINE PROJECT
SITE PLAN

SHEET: 2 OF 3 SHEETS

C:\WCE-CAD - DOCUMENTS\08-NORTH-OGDEN\100-WATER\400 EAST\DWG\BASE.DWG 8/24/2021 12:03:02 PM

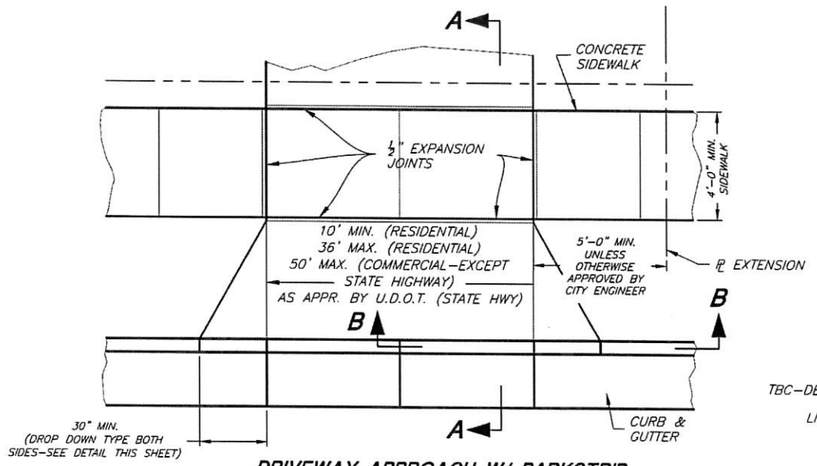

DRIVEWAY APPROACH W/ PARKSTRIP

DROP DOWN STYLE (CITY STANDARD)

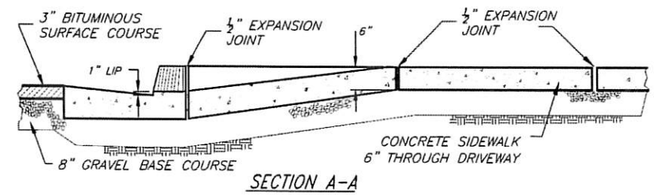

SECTION A-A

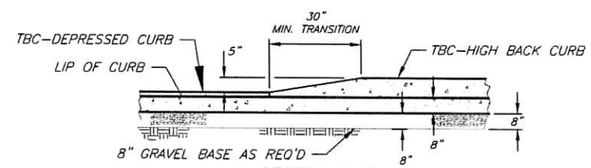

SECTION B-B

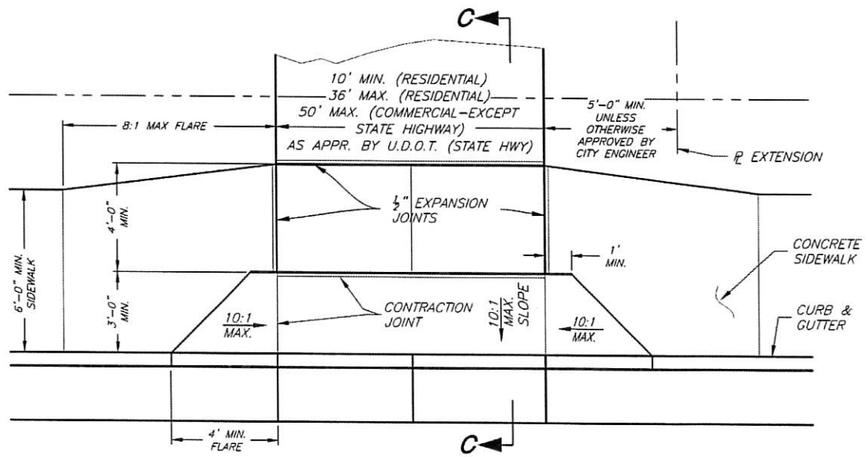

DRIVEWAY APPROACH W/ ADJACENT SIDEWALK

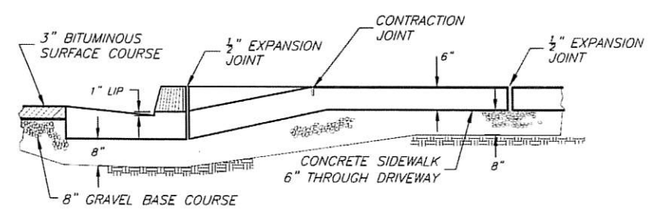

SECTION C-C

PROJECT ENGINEER				SCALE: N.T.S.	DESIGNED MEH	JONES & ASSOCIATES	CONSULTING ENGINEERS	NORTH OGDEN CITY CORPORATION	SHEET:
					DRAWN BEB		6080 Fashion Point Drive	PUBLIC WORKS STANDARDS	RD-02
DATE	REV.	DATE	APPR.		CHECKED MEH		South Ogden, Utah 84403 (801) 476-9767	PUBLIC ROADS - TYPICAL DRIVE APPROACH DETAILS	OF 26 SHEETS
									0

STREET NOTES:

1. PRESSURIZED IRRIGATION SYSTEM DESIGN AS APPROVED BY PINEVIEW OR MOUNTAIN VIEW IRRIGATION.
2. THE NUMBER OF VALVES REQUIRED AT EACH INTERSECTION SHALL BE DETERMINED BY THE CITY WATER DEPARTMENT.
3. EXACT LOCATION OF STREET AND REGULATORY SIGNS SHALL BE SPECIFIED BY THE CITY ENGINEER FOR SPECIFIC INTERSECTIONS.
4. SIGNS TO BE INSTALLED AND PAID FOR BY THE DEVELOPER.
5. CITY UTILITY LINES MUST BE LOCATED IN A PUBLIC RIGHT-OF-WAY. NO CITY UTILITIES MAY BE CONSTRUCTED ON PRIVATE PROPERTY. ANY UTILITY LINES MAINTAINED BY THE CITY MUST ALSO BE IN A PUBLIC RIGHT-OF-WAY.

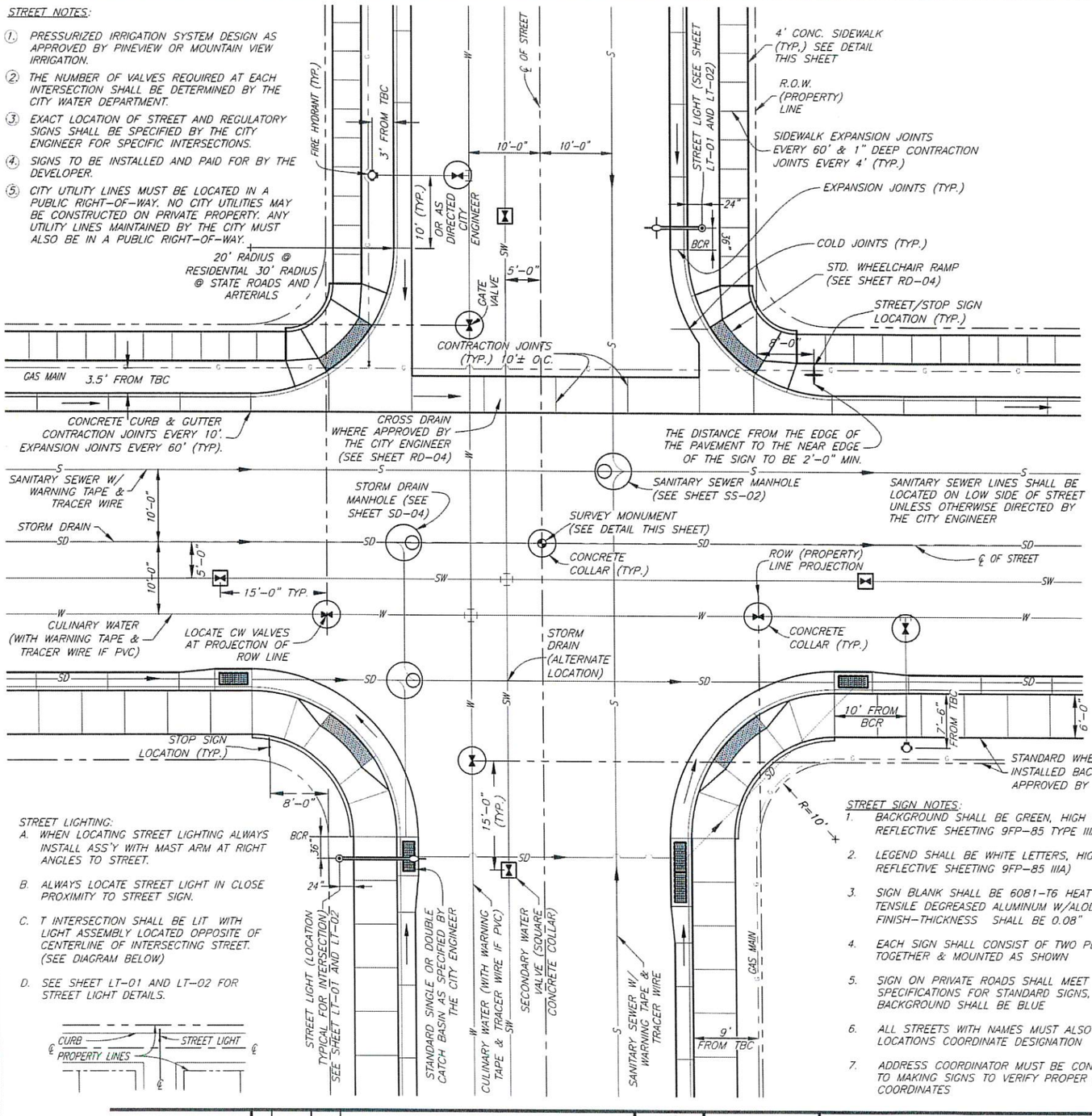

STREET LIGHTING:

A. WHEN LOCATING STREET LIGHTING ALWAYS INSTALL ASS'Y WITH MAST ARM AT RIGHT ANGLES TO STREET.

B. ALWAYS LOCATE STREET LIGHT IN CLOSE PROXIMITY TO STREET SIGN.

C. T INTERSECTION SHALL BE LIT WITH LIGHT ASSEMBLY LOCATED OPPOSITE OF CENTERLINE OF INTERSECTING STREET. (SEE DIAGRAM BELOW)

D. SEE SHEET LT-01 AND LT-02 FOR STREET LIGHT DETAILS.

STREET SIGN NOTES:

1. BACKGROUND SHALL BE GREEN, HIGH INTENSITY REFLECTIVE SHEETING 9FP-85 TYPE IIIA)
2. LEGEND SHALL BE WHITE LETTERS, HIGH INTENSITY REFLECTIVE SHEETING 9FP-85 IIIA)
3. SIGN BLANK SHALL BE 6081-T6 HEAT TREATED HIGH TENSILE DEGREASED ALUMINUM W/ALODINE 1200 FINISH-THICKNESS SHALL BE 0.08"
4. EACH SIGN SHALL CONSIST OF TWO PLATES RIVETED TOGETHER & MOUNTED AS SHOWN
5. SIGN ON PRIVATE ROADS SHALL MEET ALL SPECIFICATIONS FOR STANDARD SIGNS, EXCEPT BACKGROUND SHALL BE BLUE
6. ALL STREETS WITH NAMES MUST ALSO SHOW LOCATIONS COORDINATE DESIGNATION
7. ADDRESS COORDINATOR MUST BE CONTACTED PRIOR TO MAKING SIGNS TO VERIFY PROPER NAMES AND COORDINATES

ALL SIGNS SHALL CONFORM TO THE REQUIREMENTS OF THE CURRENT "MANUAL ON UNIFORM TRAFFIC CONTROL DEVICES"

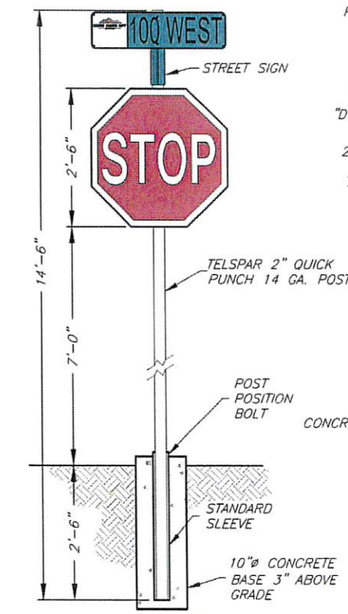

STREET / TRAFFIC SIGN & POST

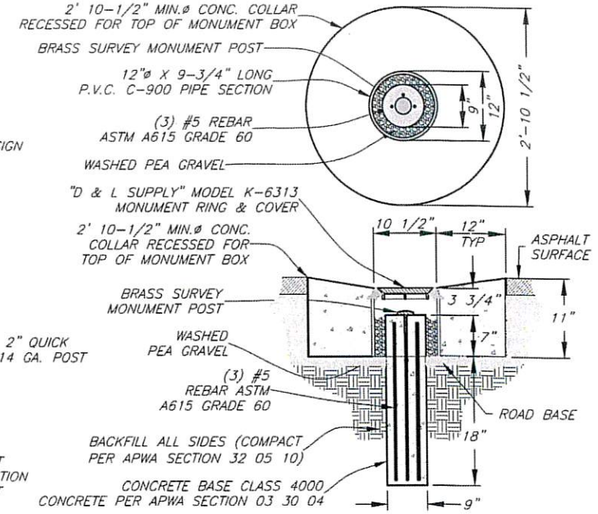

SURVEY MONUMENT DETAIL

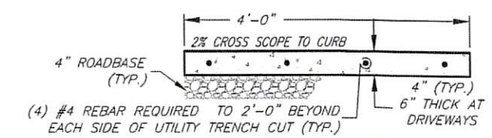

SIDEWALK SECTION

(CITY STANDARD)

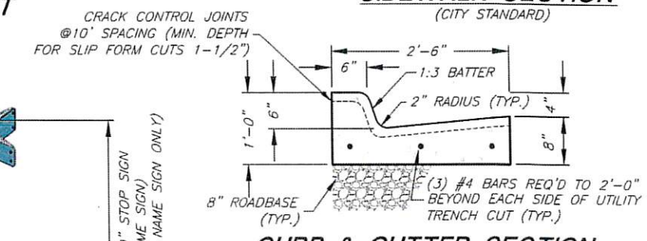

CURB & GUTTER SECTION

(CITY STANDARD)

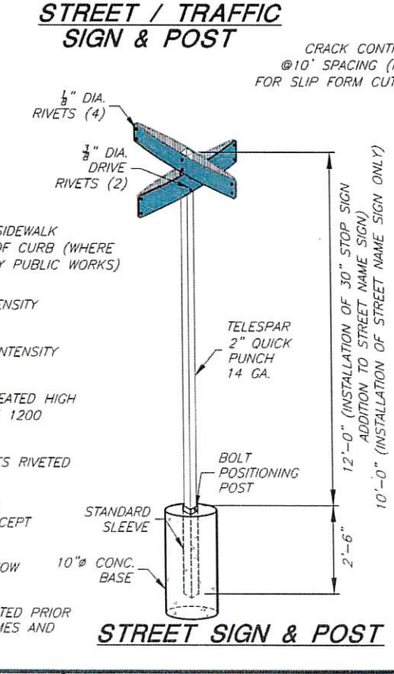

STREET SIGN & POST

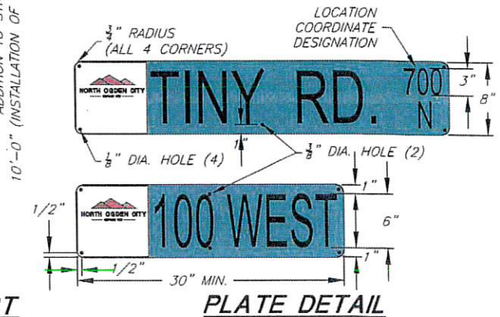

PLATE DETAIL

PROJECT ENGINEER	REV.	DATE	APPR.	SCALE: N.T.S.	DESIGNED BEB DRAWN HEH CHECKED MEH	JONES & ASSOCIATES CONSULTING ENGINEERS 6080 Fashion Point Drive South Ogden, Utah 84403 (801) 476-9767	NORTH OGDEN CITY CORPORATION PUBLIC WORKS STANDARDS PUBLIC ROADS - TYPICAL INTERSECTION DETAILS	SHEET: RD-03 OF 26 SHEETS 0
DATE								

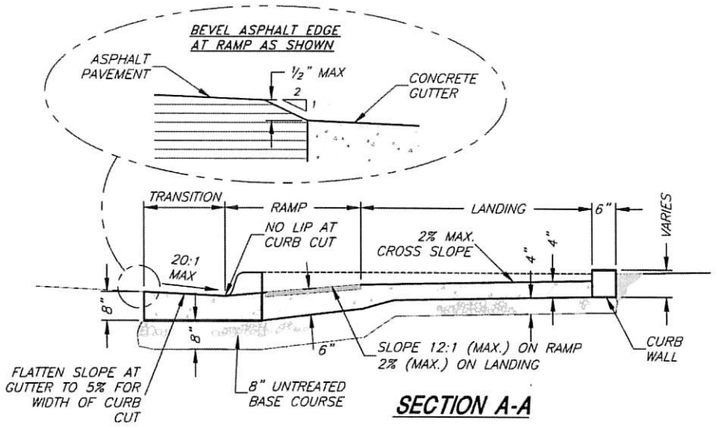

SECTION A-A

ADA RAMP NOTES:

1. WHERE DESIGNATED BY THE CITY, ALTERNATE RAMP DESIGNS MAY BE USED. SUBMIT ENGINEERED CONSTRUCTION PLANS TO CITY ENGINEER AND THE CITY PUBLIC WORKS DEPARTMENT FOR REVIEW AND ACCEPTANCE PRIOR TO CONSTRUCTION.
2. USE THE SLOPE TABLE BELOW FOR RAMP CONSTRUCTION. THE USE OF FLARES, CURB WALLS, ETC. ARE AT THE DISCRETION OF THE ENGINEER.
3. LOCATE CURB CUT WITHIN CROSSWALK.
4. RAMP GRADE BREAK MUST BE PERPENDICULAR TO THE RUNNING SLOPE.

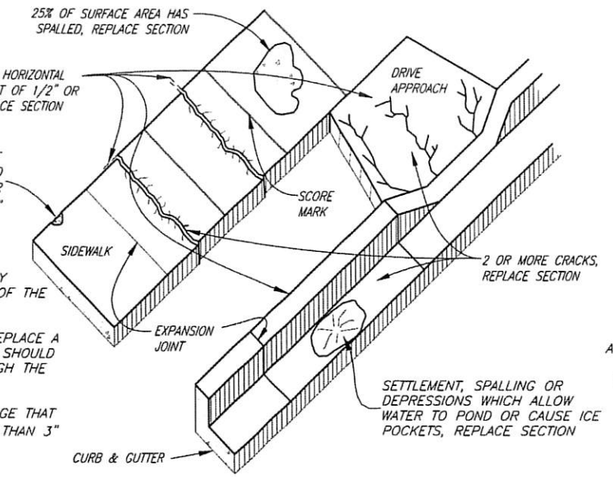

CONCRETE REPLACEMENT NOTES:

1. REPLACEMENT IS REQUIRED IF ANY COMPONENT HAS ONE OR MORE OF THE CONDITIONS SHOWN.
2. ANYTIME CONCRETE IS CUT TO REPLACE A DEFECTIVE COMPONENT, THE CUT SHOULD EXTEND COMPLETELY THROUGH THE PIECE BEING REPLACED.
3. A CHIP IS CONCRETE EDGE DAMAGE THAT IS DEEPER THAN 1/2" AND LARGER THAN 3" DIA.

DEFECTIVE CONCRETE REPLACEMENT CRITERIA

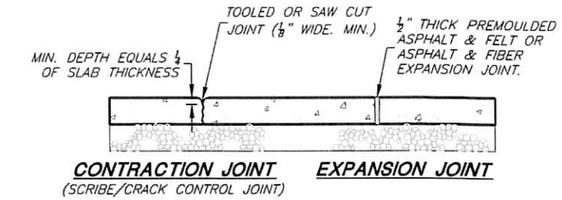

JOINT DETAIL

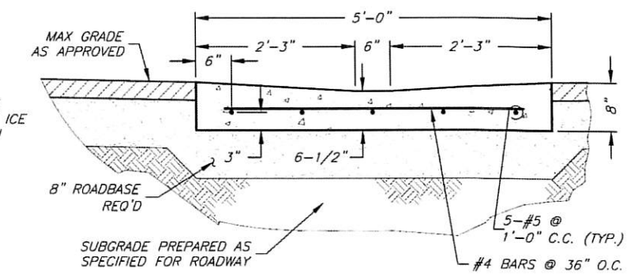

CROSS DRAIN SECTION

(WHERE APPROVED BY CITY PUBLIC WORKS DIRECTOR AND THE CITY ENGINEER)

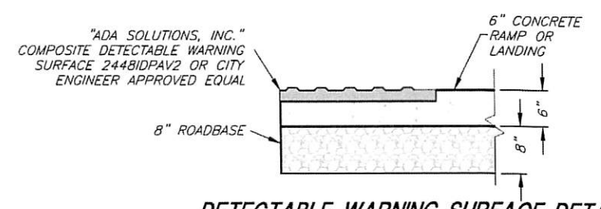

DETECTABLE WARNING SURFACE DETAIL

DETECTABLE WARNING SURFACE NOTES:

1. LOCATE DETECTABLE WARNING SURFACE SO THAT THE EDGE NEAREST THE CURB LINE OR OTHER POTENTIAL HAZARD IS 6 TO 8 INCHES FROM THE CURB LINE OR OTHER POTENTIAL HAZARD. PROVIDE 2-FOOT MINIMUM DEPTH.
2. PROVIDE DETECTABLE WARNING SURFACE FOR FULL WIDTH OF CURB CUT.
3. THE DETECTABLE WARNING SURFACE DOMES SHALL BE ORIENTED SUCH THAT THE ROWS ARE PARALLEL WITH THE DIRECTION OF PEDESTRIAN TRAVEL TO THE RAMP ON THE OPPOSITE SIDE OF THE STREET.
4. THE STANDARD COLOR FOR THE DETECTABLE WARNING SURFACE SHALL BE DARK GRAY OR PRE-APPROVED CONTRASTING COLOR. WHEN THE EXISTING SIDEWALK COLOR IS NOT STANDARD CONCRETE, THE COLOR OF THE DETECTABLE WARNING SURFACE SHALL BE DETERMINED BY THE CITY ENGINEER OR AUTHORIZED REPRESENTATIVE.
5. WHEN A DETECTABLE WARNING SURFACE DOME IS CUT, THE REMAINING PORTION OF THE DOME SHALL BE BEVELED TO A MAXIMUM SLOPE OF 1:2.

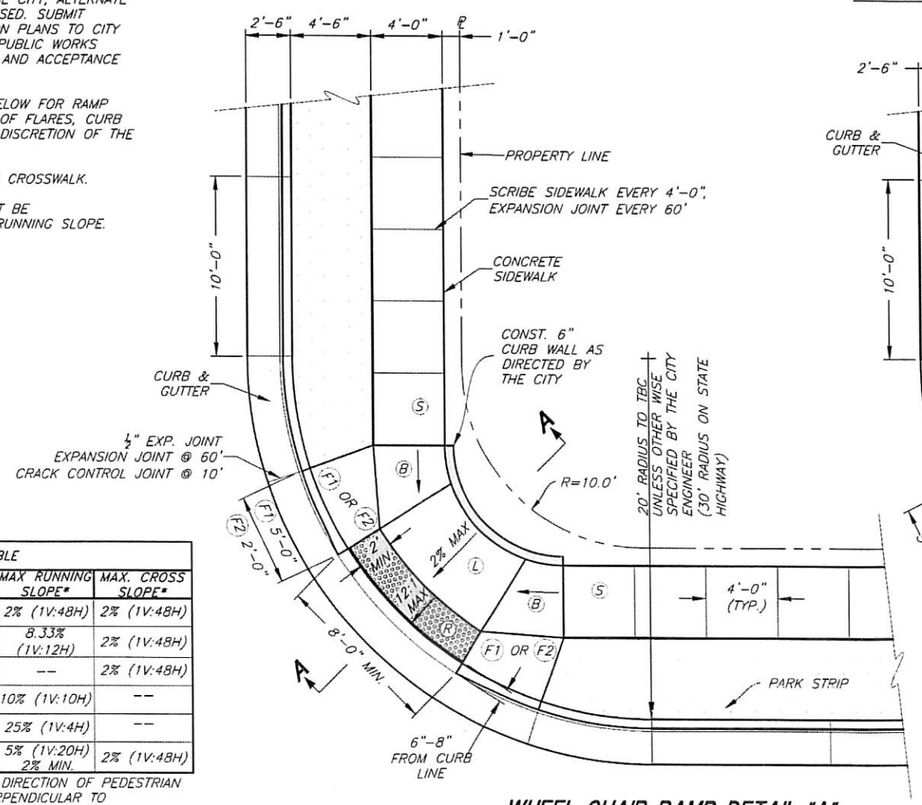

WHEEL CHAIR RAMP DETAIL "A"

CITY STANDARD (WITH PARK STRIP)

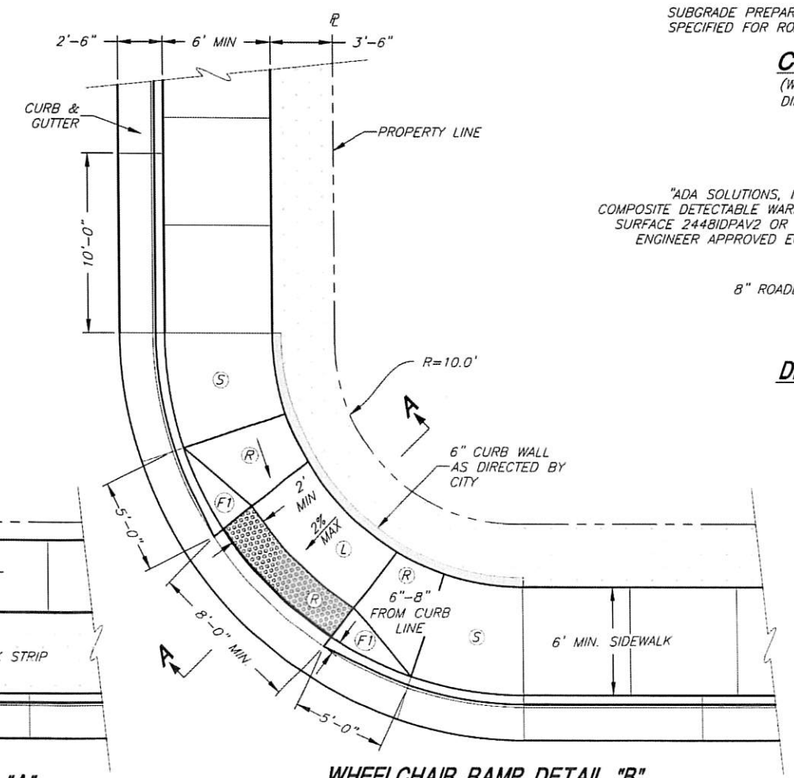

WHEELCHAIR RAMP DETAIL "B"

REQUIRES WRITTEN CITY APPROVAL (WITHOUT PARK STRIP)

SLOPE TABLE

	ITEM	MAX RUNNING SLOPE*	MAX. CROSS SLOPE*
L	LANDING	2% (1V:48H)	2% (1V:48H)
R	RAMP	8.33% (1V:12H)	2% (1V:48H)
S	SIDEWALK	--	2% (1V:48H)
F1	TRAVERSABLE SURFACE	10% (1V:10H)	--
F2	NON-TRAVERSABLE SURFACE	25% (1V:4H)	--
B	BLENDED TRANSITION	5% (1V:20H) 2% MIN.	2% (1V:48H)

* RUNNING SLOPE IS IN THE DIRECTION OF PEDESTRIAN TRAVEL. CROSS SLOPE IS PERPENDICULAR TO PEDESTRIAN TRAVEL.

PROJECT ENGINEER

DATE

REV.	DATE	APPR.

SCALE: N.T.S.

DESIGNED HEH
DRAWN BEB
CHECKED MEH

JONES & ASSOCIATES CONSULTING ENGINEERS
6080 Fashion Point Drive
South Ogden, Utah 84403 (801) 476-9767

NORTH OGDEN CITY CORPORATION
PUBLIC WORKS STANDARDS

PUBLIC ROADS - TYPICAL ADA RAMP & DEFECTIVE CONCRETE REPLACEMENT DETAILS

SHEET: RD-04
OF 26 SHEETS
0

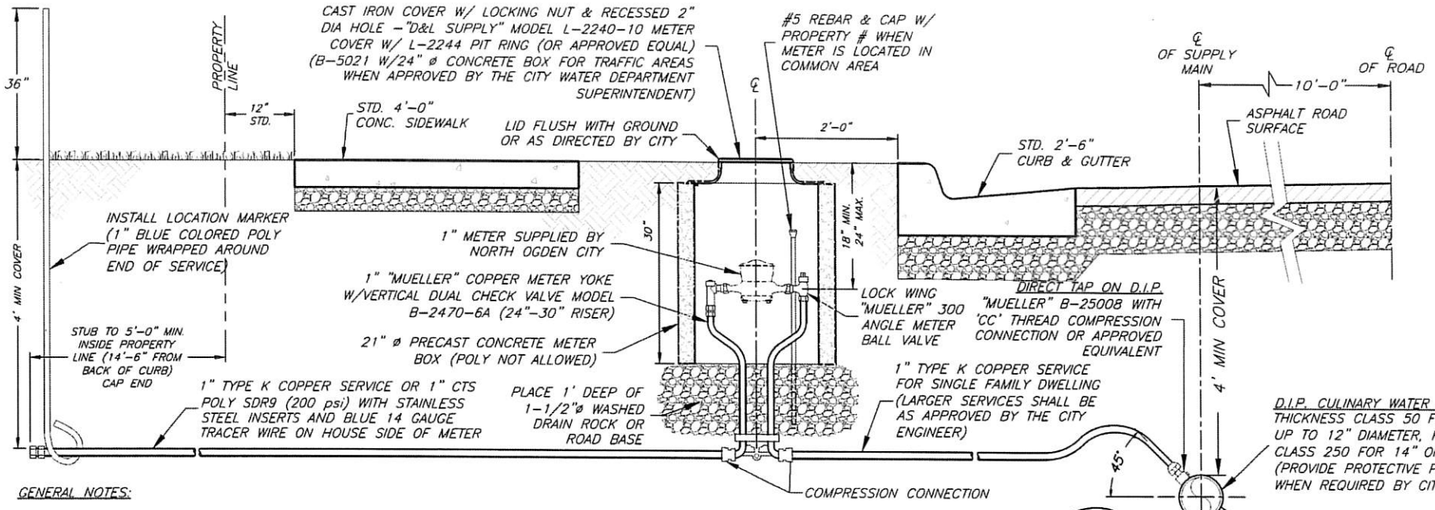

GENERAL NOTES:

1. PROPERTY OWNER OR CONTRACTOR SHALL PAY FOR ALL COSTS OF INSTALLATION INCLUDING ALL MATERIALS, ALL EXCAVATION AND FILL, ASPHALT REPLACEMENT AND WATER MAIN CONNECTION. CITY TO FURNISH METER (UP TO 1" SIZE) AT NO COST.
2. INSPECTION OF ALL WATER LINE INSTALLATIONS WILL BE DONE BY NORTH OGDEN CITY WATER DEPARTMENT, WITH A 48 HOUR MINIMUM NOTICE REQUIRED PRIOR TO START OF WORK.
3. IF APPLICABLE, A NORTH OGDEN CITY CUT PERMIT MUST BE REQUESTED AND APPROVED PRIOR TO START OF WORK.
4. PROPERTY OWNER RESPONSIBLE FOR PIPING AND FITTINGS ON HOUSE SIDE OF THE METER.

TYPICAL CULINARY WATER SERVICE CONNECTION

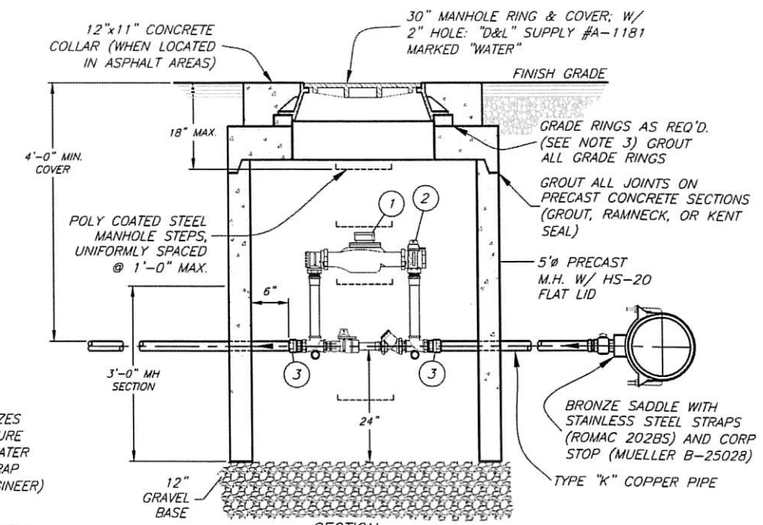

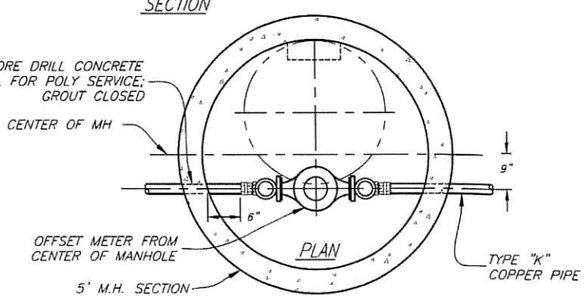

1 1/2" & 2" WATER METER STATION

NO.	DESCRIPTION 1 1/2" & 2" METER STA.	JOINT TYPE	1 1/2" LINE	2" LINE
1	"OCTAVE ULTRASONIC" METER (SUPPLIED BY CITY)	FL	1 1/2"	2"
2	"MUELLER" B–2423–2 METER YOKE (18" HEIGHT)	–	1 1/2"	2"
3	"MUELLER" 110 COMPRESSION CONN. COUPLING	–	1 1/2"	2"

1 1/2" & 2" METER NOTES:

1. 1½" SERVICE LINE–13" METER
   2" SERVICE LINE–17" METER
2. CITY SHALL SUPPLY METER.
3. NO MORE THAN 12" OF GRADE RINGS TO BE ALLOWED ON ANY MANHOLE
4. RAISE ALL MANHOLES TO FINISH GRADE OF STREET FOLLOWING PAVING WITH A CONCRETE COLLAR. COLLAR TO BE HELD DOWN ½" BELOW TOP OF NEW ASPHALT.
5. ALL SERVICE LINES TO METER SHALL BE TYPE "K" COPPER.

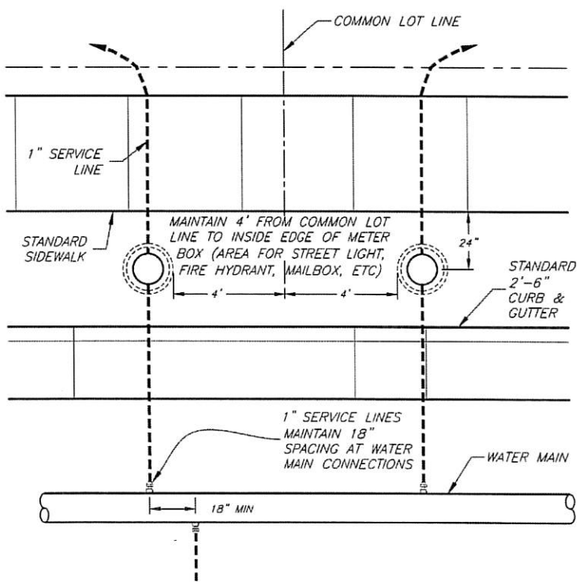

STANDARD WATER METER LOCATION

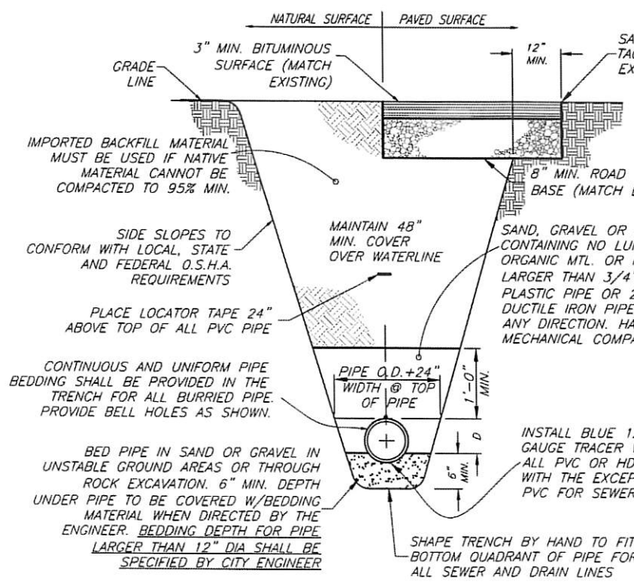

TYPICAL TRENCH SECTION

(WATER, SEWER, AND STORM DRAIN)

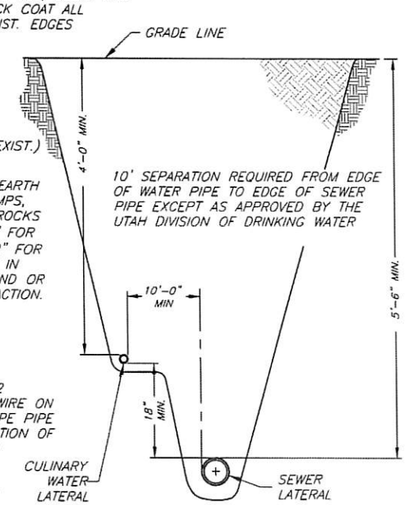

COMBINED WATER & SEWER SECTION

ALL SPECIFIED BRANDS OF MATERIALS SHOWN ON THESE DRAWINGS ARE "CITY STANDARDS." OTHER EQUIVALENT BRANDS MAY BE USED WITH THE PRIOR APPROVAL OF THE CITY ENGINEER AND THE CITY WATER DEPARTMENT SUPERINTENDENT.

PROJECT ENGINEER	REV.	DATE	APPR.	
DATE				

SCALE: N.T.S.

DESIGNED BED
DRAWN MEH
CHECKED MEH

JONES & ASSOCIATES CONSULTING ENGINEERS
6080 Fashion Point Drive
South Ogden, Utah 84403 (801) 476–9767

NORTH OGDEN CITY CORPORATION
PUBLIC WORKS STANDARDS

CULINARY WATER - RESIDENTIAL WATER SERVICE, 1", 1 1/2" & 2" METER STATION, & PIPE TRENCH DETAILS

SHEET: CW-01
OF 26 SHEETS
0

THRUST PER PSI OF WATER PRESSURE AT VARIOUS FITTINGS				
PIPE SIZE (IN.)	DEAD END OR TEE (LB.)	90° ELBOW (LB.)	45° ELBOW (LB.)	22-1/2° ELBOW (LB.)
4	19	27	15	7
6	39	55	30	15
8	67	94	51	26
10	109	154	84	43
12	155	218	119	61
14	210	296	161	82
16	272	383	209	106
18	351	494	269	137
20	434	611	333	169
24	623	878	487	244
30	947	1,332	722	377
36	1,356	1,905	1,032	542

THRUST BLOCK TABLE NOTES:

1. IN USING THE ABOVE TABLE, USE THE MAXIMUM INTERNAL PRESSURE ANTICIPATED (I.E. HYDROSTATIC TEST PRESSURE, POSSIBLE SURGE PRESSURE DUE TO PUMP SHUT OFF, ETC.).
2. SEE SOILS REPORT FOR BEARING STRENGTH OF SOIL. IN THE ABSENCE OF A SOILS REPORT, AN AVERAGE SOIL (SPADABLE MEDIUM CLAY) CAN BE ASSUMED TO HAVE A BEARING STRENGTH OF 2000 P.S.F.

EXAMPLE:

8-INCH 90° ELBOW, PRESSURE 200 LB./SQ. IN.
FROM TABLE: THRUST = 94 X 200 = 18,800 LB.
ASSUME BEARING STRENGTH = 2.000 LB./SQ. FT.

18,800 / 2,000 = 9.4 SQ. FT. — AREA OF BEARING REQUIRED FOR THRUST BLOCK

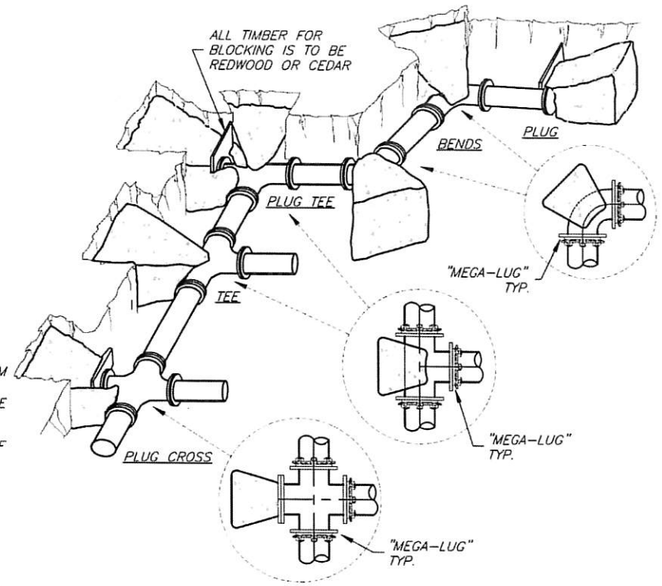

TYPICAL RETAINER GLANDS & THRUST BLOCKING

PIPE RESTRAINT

1. ALL BENDS, CROSSES, TEES, REDUCERS, AND VALVES SHALL BE INSTALLED WITH RESTRAINING JOINTS ("MEGA-LUG" OR APPROVED EQUAL).
2. DESIGN SHALL ALSO BE REQUIRED TO ENSURE ADEQUATE RESTRAINT FOR PIPING JOINTS NEAR FITTINGS BASED ON PIPE DIAMETER AND PIPE PRESSURE.

THRUST BLOCKING NOTES:

1. CONCRETE SHALL NOT BE PLACED WITHIN 1-1/2" OF JOINTS AND BOLTS. COVER ALL METAL CONTACT AREAS WITH A POLY WRAP PRIOR TO CONCRETE PLACEMENT.
2. IN THE ABSENCE OF A SOILS REPORT, ALL THRUST BLOCKS SHALL BE SIZED ON THE BASIS OF A MAXIMUM LATERAL BEARING VALUE FOR 2000 P.S.F. AND A THRUST RESULTING FROM 200% OF THE WATER LINE STATIC LINE TEST.
3. THRUST BLOCKS ARE REQUIRED AT ALL BENDS OF 22-1/2° OR MORE.
4. CONCRETE SHALL HAVE A COMPRESSIVE STRENGTH OF NOT LESS THAN 2500 PSI IN 28 DAYS.

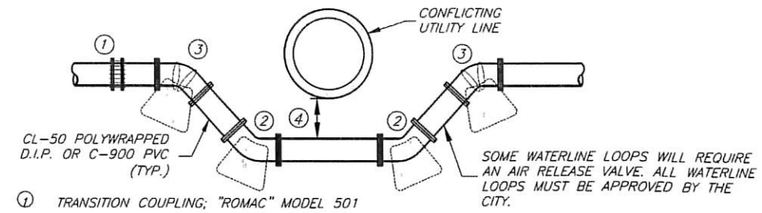

① TRANSITION COUPLING; "ROMAC" MODEL 501

② MJ 45° BEND W/RETAINER GLANDS

③ CONSTRUCT THRUST BLOCKS AT EACH 45° BEND W/(3) #6 REBARS SECURING BLOCK TO FITTING (EPOXY COATING)

④ MAINTAIN A MINIMUM OF 12" SEPARATION BETWEEN THE WATERLINE AND CONFLICTING UTILITY LINE TO BE CROSSED. HOWEVER, WATERLINE LOOPS MUST CROSS OVER SEWER LINES WITH A MINIMUM OF 18" SEPARATION. IF THIS SEPARATION CANNOT BE MAINTAINED THEN AN EXCEPTION MUST BE OBTAINED FROM THE UTAH DIVISION OF DRINKING WATER.

TYPICAL WATERLINE LOOP

FIRE LINE NOTES:

1. NO WATER SERVICE OR FIRE LINES TO BUILDINGS ARE PERMITTED TO CONNECT TO AUXILIARY LINES SERVICING FIRE HYDRANTS.
2. COMMERCIAL FIRE LINES FROM THE MAIN TO BUILDING SHALL BE SEPARATE LINES AND NOT PART OF THE WATER SERVICE LATERAL.
3. FIRE LINES ARE TO BE MAINTAINED BY THE PROPERTY OWNER UP TO THE VALVE AT THE MAIN. THE CITY SHALL OWN AND MAINTAIN THE FIRE SUPPRESSION LINE VALVE AT THE MAIN.
4. FIRE HYDRANTS AND FIRE LINES ON PRIVATE PROPERTY SHALL BE OWNED AND MAINTAINED BY THE PROPERTY OWNER UNLESS OTHERWISE SPECIFIED.
5. FIRE HYDRANTS ARE TO BE INSTALLED IN LOCATIONS AS REQUIRED BY THE FIRE CODE AND APPROVED BY THE FIRE CHIEF AND CITY ENGINEER.
6. FIRE HYDRANTS SHALL NOT BE CONNECTED TO, OR LOCATED WITHIN, 10 FEET OF SANITARY SEWERS. WHERE POSSIBLE, HYDRANT DRAINS SHALL NOT BE BE LOCATED WITHIN 10 FEET OF STORM DRAINS.

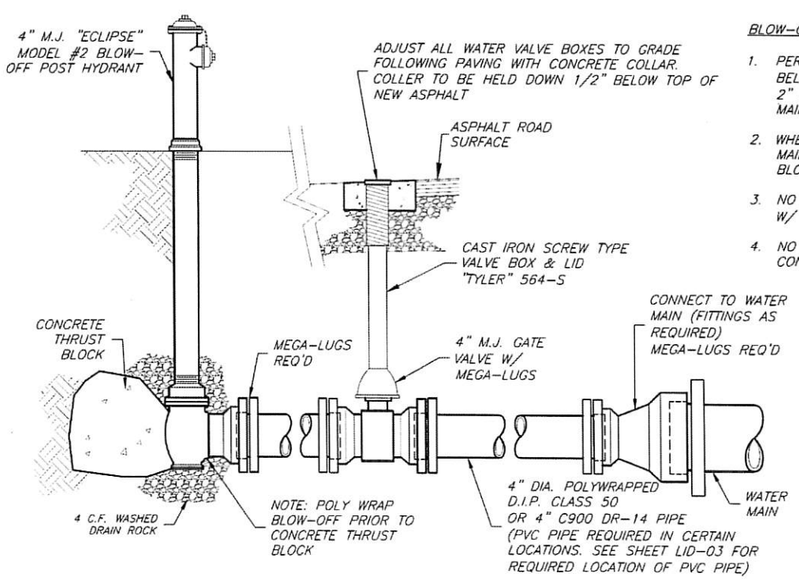

TYPICAL FLUSH VALVE CONNECTION

BLOW-OFF NOTES:

1. PERMANENT BLOW-OFFS SHALL BE 4" AS SHOWN BELOW. TEMPORARY BLOW-OFFS MAY BE 2" WITH 2" POLY AND 2" GATE VALVE WITH VALVE BOX AT MAIN.
2. WHEN TEMPORARY BLOW-OFFS ARE REMOVED THE MAIN SHALL ALSO BE REMOVED WHERE THE BLOW-OFF IS CONNECTED.
3. NO TAPS ARE ALLOWED ON THE MAIN. USE A CAP W/ THREADED CORP STOP CONNECTION.
4. NO FLUSHING DEVICE SHALL BE DIRECTLY CONNECTED TO A SEWER LINE.

GENERAL NOTES:

1. THE USE OF "BLUE" BOLTS AND NUTS IS APPROVED BY THE CITY
2. ALL WATER MAIN AND HYDRANT GATE VALVES TO BE "MUELLER" 350 PSI RESILIENT WEDGE A-2361 VALVES
3. ALL SPECIFIED BRANDS OF MATERIALS SHOWN ON THESE DRAWINGS ARE "CITY STANDARDS." OTHER EQUIVALENT BRANDS MAY BE USED WITH THE PRIOR APPROVAL OF THE CITY ENGINEER AND THE CITY WATER DEPARTMENT SUPERINTENDENT.

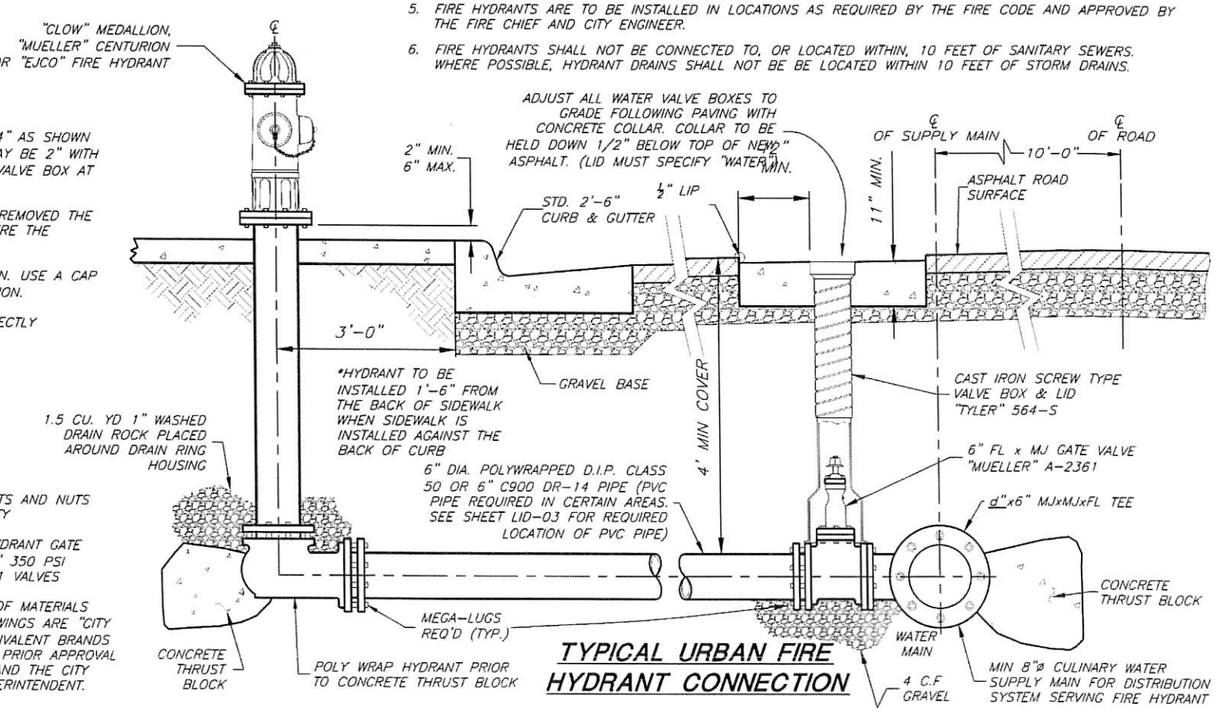

TYPICAL URBAN FIRE HYDRANT CONNECTION

PROJECT ENGINEER	REV.	DATE	APPR.	SCALE: N.T.S.	DESIGNED DEB DRAWN MEH CHECKED MEH
DATE					

JONES & ASSOCIATES — CONSULTING ENGINEERS
6080 Fashion Point Drive
South Ogden, Utah 84403 (801) 476-9767

NORTH OGDEN CITY CORPORATION
PUBLIC WORKS STANDARDS
CULINARY WATER - THRUST BLOCK, WATERLINE LOOP FLUSH VALVE, & FIRE HYDRANT DETAILS

SHEET: CW-02 OF 28 SHEETS 0

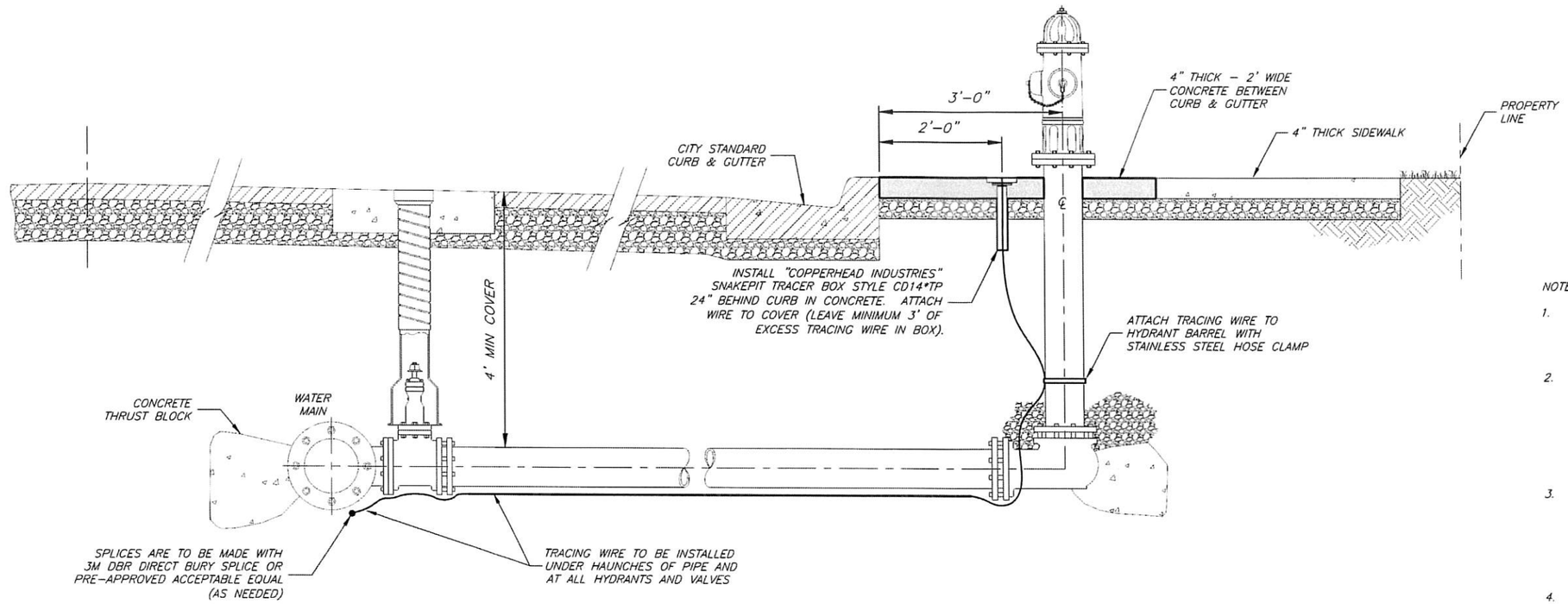

NOTES:

1. ALL WATERLINES SHALL HAVE A MINIMUM 12 GA. INSULATED TRACING WIRE INSTALLED UNDER THE HAUNCHES OF THE PIPE PRIOR TO BACKFILLING.
2. TRACING WIRES SHALL TERMINATE AT ALL FIRE HYDRANTS. AT SERVICE SADDLES AND TAPPING SLEEVES, THE TRACING WIRE SHALL NOT BE ALLOWED TO BE PLACED BETWEEN THE SADDLE AND THE PIPE. A GROUNDING ROD SHALL BE INSTALLED AT ALL TRACER SYSTEM TERMINAL POINTS.
3. TRACING WIRE SHALL BE COPPER WIRE WITH BLUE INSULATION RATED FOR DIRECT BURIAL. ALL WIRE CONNECTORS SHALL BE 3M DBR DIRECT BURY SPLICE OR PRE-APPROVED ACCEPTABLE EQUAL AND SHALL BE WATERTIGHT TO PROVIDE ELECTRICAL CONTINUITY.
4. ALL TRACING WIRE SHALL BE TESTED FOR CONTINUITY IN THE PRESENCE OF THE PUBLIC WORKS INSPECTOR PRIOR TO ASPHALT PLACEMENT. ANY TRACING WIRE FOUND NOT TO BE CONTINUOUS AFTER TESTING SHALL BE REPAIRED OR REPLACED BY THE CONTRACTOR PRIOR TO ASPHALT PLACEMENT.

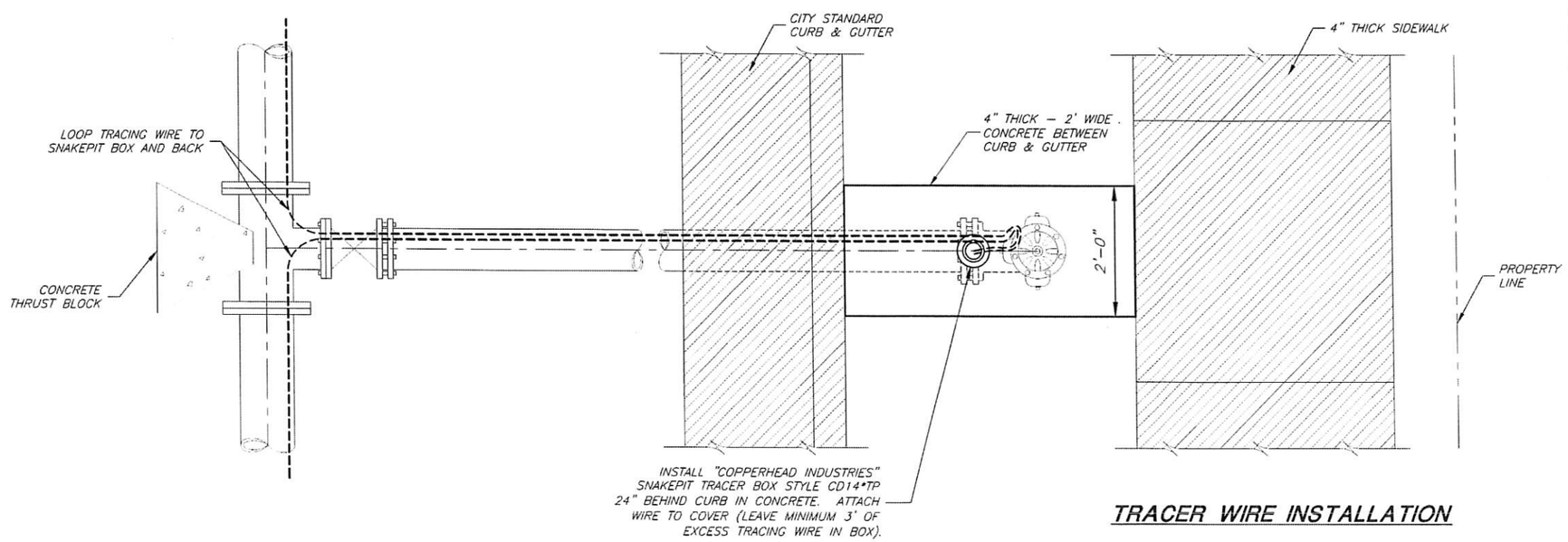

TRACER WIRE INSTALLATION

PROJECT ENGINEER	REV.	DATE	APPR.	SCALE: N.T.S.	DESIGNED MEH DRAWN BEB CHECKED MEH	JONES & ASSOCIATES CONSULTING ENGINEERS 6080 Fashion Point Drive South Ogden, Utah 84403 (801) 476-9767	NORTH OGDEN CITY CORPORATION PUBLIC WORKS STANDARDS CULINARY WATER - TRACING WIRE INSTALLATION DETAILS	SHEET: CW-03 OF 26 SHEETS 0
DATE								