Providence City
Administrative Land Use Authority (ALUA)
Agenda – June 16, 2021 – 2:30 PM
Providence City Office Building
164 North Gateway Drive, Providence UT 84332
This meeting will live stream on Providence City's YouTube Channel
Persons wishing to comment on agenda items may email their comments to providencecityutah@gmail.com or text comments to 435-752-9441.

Call to Order: Skarlet Bankhead, Chair

Item No. 1 - Conditional Use – Pool and Retaining Wall: The Providence City Administrative Land Use Authority will consider for approval a request by 1, LLC for Bryan Wrigley for a pool and retaining wall located at 250 S. Sherwood Dr., Providence, UT.

Item No. 2 - Conditional Use – Townhomes: The Providence City Administrative Land Use Authority will consider for approval a request by Visionary Homes for a townhome building located at 533-549 N. 100 E., Providence, UT (Vineyard Bldg. 11).

Item No. 3 - Conditional Use – Condominiums: The Providence City Administrative Land Use Authority will consider for approval a request by Visionary Homes for a condominium building located at 115 E. 550 N., Providence, UT (Vineyard Bldg. C)

Item No. 4 - Conditional Use - Condominiums: The Providence City Administrative Land Use Authority will consider for approval a request by Visionary Homes for a condominium building located at 536 N. 130 E., Providence, UT (Vineyard Bldg. E).

Agenda posted on June 14, 2021

Diane Campbell
Diane Campbell

If you have a disability and/or need assistance while attending the Providence City Administrative Land Use Authority meeting, please call 435-752-9441 before 1:00 pm on the day of the meeting.

PROVIDENCE CITY Land Use Authority – Staff Report Meeting Date: June 16, 2021		
Request: Applicant is requesting approval of a conditional use application for a pool located at 250 S. Sherwood Drive, Providence UT.		
Item Type: Pool and Retaining Wall	**Applicant:** 1, LLC (Bryan Wrigley)	**Address:** 250 S. Sherwood Drive, Providence
Parcel ID #: 03-127-7103	**General Plan**: SFT	**Zone**: SFT
Background Information: Complete Application was received June 10, 2021 and contained: 1. Providence City Conditional Use application and Residential Site Plan Application 2. Payment of application $100. Rob Stapley, Providence City Public Works Director, inspected the current infrastructure June 14, 2021.		

FINDINGS OF FACT:

1. UCA 10-9a-507. Conditional Uses allow a municipality to adopt a land use ordinance that includes conditional uses and provisions for conditional uses that require compliance with standards set for in an applicable ordinance.
2. The Cache County GIS Parcel Summary shows sensitive areas that may require further analysis.
3. Providence City Code (PCC) 10-5 Sensitive Areas, Section 1 Conditional use permit required states, all requests for permits involving a lot, parcel or site located wholly or partially within an area subject to the Hazard Flood (HF), Hazard Slope (HS), Hazard Water Table (HW) or Hazard Earthquake Primary Fault (HE), Hazard Wildfire (WF) regulations, shall be dealt with as a request for a conditional use permit under the provisions of Section 10-3-5 of this Title. All applications shall comply with the following regulations before any permit shall be issued.
4. PCC 10-3-5 Conditional Use Permits allows the City to impose reasonable conditions: to mitigate the reasonably anticipated detrimental effects of the proposed use on the health, safety, or general welfare of persons residing, working, or conducting business in the vicinity; to mitigate injury to property in the vicinity; to mitigate any risk to safety of persons or property because of vehicular traffic or parking, large gatherings of people, or other causes.

CONCLUSIONS OF LAW:

1. Providence City has adopted land use ordinances that include conditional uses and provisions for conditional uses.
2. The Cache County GIS Parcel Summary indicates this parcel is in Steep Slope and Wildfire Hazard areas.
3. Providence City has the authority to impose reasonable conditions to mitigate the reasonably anticipated detrimental effects of the proposed use.
4. The request meets the requirements of the Codes listed in the Findings of Fact with the following conditions:

CONDITIONS:

1. The applicant will continue to meet all relevant federal, state, county, and Providence City rules, laws, codes, and ordinances.
2. The applicant will mitigate slopes with construction of retaining wall. Current slope measured at less than 16%. No wildfire review from Aaron Walker, Deputy Fire Inspector, is required for these projects – see email dated

DRAFT

June 9, 2021.

3. The applicant will meet all requirements listed in Providence City Code 5-4-7 for swimming pools.
4. This conditional use is for the pool only as shown on the site plan dated June 10, 2021.
5. Approval by the City of any submitted application or paperwork does not alleviate the owners and/or their agents from their responsibility to understand and conform to local, state, and federal laws. Providence City's approval is not intended to and cannot be construed to allow any laws to be violated.

DRAFT

FOR OFFICE USE ONLY
Date _____
Payment Form _____
Amount _____
Receipt # _____
Clerk _____

PROVIDENCE CITY
APPLICATION FOR A CONDITIONAL USE

Please Note: City Staff will NOT accept the application and fee payment if they are incomplete. Incomplete applications will NOT be processed or scheduled for review by the City.

Initial ____ Name Lev Spann/1 llc

Date 5/20/21

SUBMITTAL REQUIREMENTS — **Staff Check**

- $100 application fee _____
- An 11"x17" of the property showing the location, function and characteristics of the use, including parking and percentage of space being used _____
- Cache County Plat Map, current; and a copy of the official recorded final plat that includes any notes. _____
- Copy of Cache County GIS Parcel Summary http://66.232.67.238/Websites/Parcel%20and%20Zoning%20Viewer/ _____
- Mitigation Strategies for applicable sensitive areas _____
- Mailing addresses for the owners of adjacent properties _____
- Property owner consent for pursuit of conditional use (if owner is different than Applicant) _____
- Electronic copy of structure elevations & square footage including attached garage(s), covered porches, covered decks etc. _____
- Electronic copy of **ALL** submittals (email or flash drive is acceptable) _____

Applicant Information (all information MUST be provided)

Name 1, llc
Address PO Box 274 Providence, UT 84332
Phone 435-232-1083 Email lev@1llc.net

Party Responsible for Payment (if different than applicant)- the individual/firm to whom any and all professional services invoices (attorney/engineer/etc.) will be sent and who will be responsible for payment of such invoices.

Name _____
Address _____
Phone _____ Email _____

Property Information

Owner of record Bryan Wrigley
Owner address 290 S Sherwood Drive
Owner phone 801-556-3553 Owner email wrigleybr@gmail.com
Parcel address 290 S Sherwood Dr Parcel Tax I.D. 03-127-7103
Zone _____ Height _____ Initial ____
Setbacks (front yard) _____ (side yard) _____ (rear yard) _____ Initial ____

Written Statement of Request (attach additional sheets if necessary)

- Briefly explain why you are seeking a conditional use and what the intended use of the property will be if the conditional use is granted.

Retaining wall for future pool house area, swimming pool & spa

Property owner and contractor shall have responsibility to determine grades, and final placement and elevations of footings/foundations. Property owner and contractor shall be responsible for compliance with all state, national and local building codes and ordinances. Initial _____ Name Lar Spann

Approval by the city of any application submittal or paperwork does not alleviate the owners from their responsibility to understand and conform to local, state and federal laws. Providence City's approval is not intended to and cannot be construed to allow any laws to be violated. Initial_____

By signing this document, you agree that Providence City will bill you for any and all professional firm fees as they arise throughout the approval process. This is in addition to application fees. All subdivisions require engineering review throughout the approval process, such as but not limited to reviews of development agreements, construction drawings, preliminary and final plats, and inspections. These services are billed by our city engineer at an hourly rate. Some subdivision applications may also require legal review. Other applications, such as but not limited to conditional uses, may also require engineering and/or legal review at the City's discretion. You agree to reimburse the City for all such costs, whether or not you were forewarned about such costs, and that the City cannot predict all situations in which professional services may be required in order to process your application. Initial_____

I declare under penalty of perjury that I am making this application of my own free will and choice and that the statements, answers, and documents submitted in connection with this application are true and correct to the best of my knowledge.

Signature of Applicant	Printed Name	Date
1 llc	Lar Spann 1, llc	6/10/21

The following is a general summary of which body reviews each land use application in Providence City. Public hearings may be required by the Planning Commission and City Council, as shown below. This matrix does not include zoning clearance/permits for new single-home construction or for business licenses, both of which are reviewed and approved by city staff.

Application	Executive Staff	Land Use Authority	Planning Commission	Public Hearing	City Council	Public Hearing	Appeal Authority
Code Amendment	✓	----	✓	✓[1]	✓	----	----
Annexation	✓	----		----	✓	✓	----
Rezone	✓	----	✓	✓	✓	----	----
Conditional Use	✓	✓		----	----	----	----
Subdivision Concept Plan	✓	----	----	----	----	----	----
Preliminary Subdivision Plat	✓	----	✓	----	----	----	----
Final/Amended Subdivision Plat[2]	✓	----	✓	----	✓[3]	----	----
Site Plan	✓	✓	----	----	----	----	----
Lot Consolidation[4]	✓	----	✓	----	----	----	----
Exception to Title[5]	✓	----	✓	----	✓	----	----
General Plan Amendment	✓	----	✓	✓	✓	----	----
Right-of-Way Vacation	✓	----	✓	----	✓	✓	----
Variance/ Appeal	----	----	----	----	----	----	✓

[1] Public Hearing required at Planning Commission only when the proposed code amendment is related to land use.
[2] Construction drawings are reviewed/approved by the City Engineer and Public Works Director.
[3] The City Council does not review the final plat itself, but rather reviews and approves the development agreement associated with the final plat.
[4] Lot consolidations are only required to have City approval when they are in a platted/recorded subdivision.
[5] Developers may ask for an exception from the requirements of the Providence City Subdivision Code (Title 11) through this process. All other variance/exception requests shall be handled by the Appeal Authority.

Residential Site Plan Application

FOR OFFICE USE ONLY
Date _____
Payment Form _____
Amount _____
Receipt # _____
Clerk _____

Date: 6/10/21

Required Submittals

Please Note: City Staff will NOT accept the application and fee payment if they are incomplete. Incomplete applications will NOT be processed or scheduled for review by the City. Application fees do not include professional firm fees, which will be billed separately. Engineered site plans may, at the City's discretion, be required. The City will contact the applicant if an engineered site plan is deemed necessary. Accessory buildings include sheds (over 200 sq ft) and all detached buildings (shop, garage, etc.)

Name 1/llc/LarSpronk **Initial** [illegible]

Construction Type	Application	Filing Fee $50- New Home $25- all other	11x17 Site Plan Must Include:			Cache County Plat Map	Stormwater NOI Permit	Stormwater Pollution Prevention Plan (SWPPP)
			Existing & proposed buildings, dimensions, & setbacks	Existing/ proposed utilities	Dimensions of driveway cut – (35' max)			
New Home								
Acc. Building							*	*
Addition							*	*
Deck							*	*
Other								

*May not apply in all cases

Applicant Information

Name: 1/llc

Mailing address: PO Box 274 Providence, UT 84332

Telephone: 435-232-1883 Email: lar@1llc.net

Property Owner Information (If applicant is not the property owner, the application **must** include the property owner's information and written consent for the applicant to pursue the permit)

Name: Bryan Wrigley

Mailing address: 250 S Sherwood

Telephone: _____ Email: _____

Utilities (circle, if applicable): Septic tank City sewer Water Well

Construction Type (circle): New home Accessory building Deck Addition Other

Pool

Do the plans include an Accessory Apartment Unit (circle): Yes No

Is this an Accessory Dwelling Unit (circle): Yes No

Project Information

Address: 250 S Sherwood Dr.

Subdivision: Fox Ridge Parcel Tax ID: 03-127-7103

Square footage for fire flow (includes all floors and all areas under the roof, including garages and covered porches):

_____ Initial_____

Zone_____ Height _____ Initial_____

Setbacks (front yard) _____ (side yard) _____ (rear yard) _____ Initial_____

Contractor Information

Name: 4/llc

Mailing address: PO Box 274 Providence, UT 84332

Telephone: 435-232-1883 Email: lev@4llc.net

Stormwater Notice of Intent (NOI) Information

NOI No. UTR_____ Permit issued to:_____

To obtain your NOI permit, please visit: cdx.epa.gov. You will create a log in and then access the Storm Water Permit Issuance System. There is a $150 NOI fee, paid directly to the state when you file your permit. For SWPPP templates, visit construction.stormwater.utah.gov.

Property owner and contractor shall have responsibility to determine grades, and final placement and elevations of footings/foundations. Property owner and contractor shall be responsible for compliance with all state, national and local building codes and ordinances.

Initial _____ **Name** Lev Sporn/4llc

Approval by the city of any application submittal or paperwork does not alleviate the owners from their responsibility to understand and conform to local, state and federal laws. Providence City's approval is not intended to and cannot be construed to allow any laws to be violated.

Initial_____

By signing this document, you agree that Providence City will bill you for any and all professional firm fees as they arise throughout the approval process. This is in addition to application fees. All subdivisions require engineering review throughout the approval process, such as but not limited to reviews of development agreements, construction drawings, preliminary and final plats, and inspections. These services are billed by our city engineer at an hourly rate. Some subdivision applications may also require legal review. Other applications, such as but not limited to conditional uses, may also require engineering and/or legal review at the City's discretion. You agree to reimburse the City for all such costs, whether or not you were forewarned about such costs, and that the City cannot predict all situations in which professional services may be required in order to process your application. Initial_____

All Applicants Must Read the Following Before Signing This Application

The granting of a zoning permit does not override any federal, state, or local building code or authorize any individual to violate any local law or ordinance. Approval of this permit does not constitute a representation by the City that it will be liable for any issues arising from the construction of homes and other structures in a Sensitive or Hazard Area. It is the responsibility of the property owner to comply with all relevant local, state, and federal laws and regulations, including but not limited to Providence City Code 10-5 outlined below:

Sensitive and Hazard Areas:

1. JURISDICTIONAL WETLANDS: As Defined by the US Army Corps of Engineers
2. STEEP SLOPES: Where the rise or fall of the land is equal to or exceeds 30% over a horizontal distance of 50 feet or greater measured perpendicular to the contour lines.
3. NATURAL WATERWAYS OR OPEN WATER: Including but not limited to: rivers, creeks, or streams. Identified as those areas where surface waters flow sufficiently to produce a defined channel or bed.
4. FLOODPLAINS: See definitions in Chapter 16 Section 3 of this Title.
5. CRUCIAL WILDLIFE HABITAT AREAS: As identified by the State Division of Wildlife Resources (DWR)

6. GEOLOGICAL HAZARD AREAS: Earthquake fault lines or areas prone to debris flows, landslides, high or extreme liquefaction potential, and rock falls as identified by the US Geological Survey (USGS)
7. WILDFIRE HAZARD AREAS: Areas of the City designated as having moderate to extreme potential for wildfire hazards as identified by the City.
8. HAZARD WATER TABLE AREA: An area where potential ground water levels may occur within 12 feet of the natural grade.

By submitting this application, I affirm that I have read and understand the Title 10 Chapter 5 requirements for construction on property in the Sensitive or Hazard Area. I understand that the City is not liable for any issues which may arise because of the construction of structures in the Sensitive or Hazard Areas of the City. The property owner and their agents assume all liability for placing structures in this area of the City. I hereby certify that I am the property owner or authorized agent and I have read and examined this application and understand that the City has no liability. I accept responsibility for all soils and hazardous conditions on the site.

I declare under penalty of perjury that I am making this application of my own free will and choice and that the statements, answers, and documents submitted in connection with this application are true and correct to the best of my knowledge.

	Lev Spann	6/10/21
Signature of Applicant	Printed Name	Date

PROVIDENCE CITY BUILDING DIVISION CONSTRUCTION POLICIES

(Required for all zoning permit applications)

1. **Zoning requirements**
   a. Site plan required to be on site at footing inspection
   b. Property corners to be marked and staked for inspection
2. **Lot ID**
   a. Posting of a lot ID sign is required during construction for inspections and emergency services. This sign is provided by the City and shall be posted by the first scheduled inspection and visible from the street.
3. **Toilets**
   a. The IPC and OSHA require a toilet on site during construction and in place prior to the first inspection. This has to be accessible to all workers in the area and requires the cooperation of all.
4. **Water Meter**
   a. Unauthorized use of City water will result in a fine and a stop work order on the property.
   b. Meter and sewer clean outs are not allowed to be encased or surrounded in concrete. (Contact the Public Works for the required specs.) The moving cost will be the responsibility of the owner.
5. **Streets/Sidewalks**
   a. No material will be allowed on public streets or sidewalks. "Material" is defined as construction products, or any size or dimension of aggregate. (See Providence City's specs.)
   b. Dirt piled over curb and sidewalk requires a minimum 4" pipe installed to allow drainage to the gutter. This temporary (180 days) blockage to the sidewalk requires safety tape or cones to divert traffic.
   c. All sidewalks, curbs, gutters, and streets associated with the property are to be kept clean during construction with a final cleaning required prior to final occupancy.
   d. Construction sites should be kept clean and all debris contained to that site.
6. **Elevations**
   a. I accept responsibility for all the soils and hazard conditions of the site. Approval of this permit does not constitute a representation by the City that the building at any specified elevation will solve any ground water, slope or hazard condition. The solution to this problem is the sole responsibility of the permit applicant, agent, or property owner.
7. **Final Occupancy**
   a. Occupying the building prior to final occupancy will result in revocation of the $500 power bond. After the initial inspection, the Building Official will determine whether any furniture can be moved into the house or garage.
8. **Temporary Occupancy**
   a. Will only be issued with special permission. Temporary permits will expire after 30 days of issue and the construction bond will be forfeited if work is not completed
9. **Permits**
   a. Plan review and permit fees are good for 180 days. Only the permit portion will be refunded, after a written letter of request is received. No fees will be refunded after this period has expired.

By signing below, I state that I have read and agree to the above terms and understand that I am the responsible party for the information contained on this sheet.

	Lee Sporm	I/llc/Bryan Wrigley	6/10/21
Signature	Printed Name	On Behalf Of	Date

Cache County
1857

Development Services Department

Building | GIS | Planning | CPDO | Trails

GIS PARCEL SUMMARY

Not Authoritative — For Preliminary Review Only

Generated on 19 May. 2021 at 04:36 PM

Parcel Number: 03-127-7103

Property Address: 250 SHERWOOD DRIVE
PROVIDENCE

Tax Roll Acreage: 1.54

Owner Name: BRYAN R TR WRIGLEY

Owner Address: 250 S SHERWOOD DR
PROVIDENCE, UT 84332-9688

Jurisdiction: Providence

Future Annexation Area: n/a

Base Zone: Contact Providence for Zoning

Overlay Zone: n/a

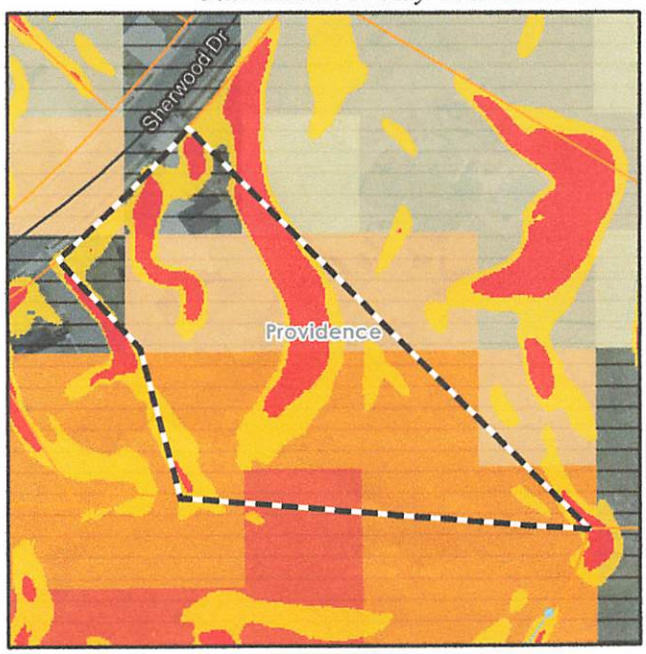

Comprehensive maps can be found at www.cachecounty.org/gis

Initial Parcel Legality Review: Incorporated Area
Contact Providence for Applicable Regulations

NOTE: *Parcel legality does **NOT** guarantee that a parcel or lot is buildable; it is only one step in the development process. All other requirements must still be met. Parcel legality should be verified before submitting a land use application.*

Areas That May Require Further Analysis

Canals
Source Water Protection Zones 1 or 2
Moderate Slopes
Steep Slopes
Wildfire Hazard Areas

This overview is based on the information in the Cache County GIS databases. Please verify the potential presence of areas requiring further analysis with the County's webmaps. Sections 17.10, 17.17, and 17.18 of the Cache County Land Use Ordinance contain the development standards and requirements associated with these areas. The definition of "Parcel/Lot" in Section 17.07.040 outlines parcel legality.

Cache County assumes no liability for any errors, omissions, or inaccuracies in the information provided regardless of the cause of such or for any decision made, action taken, or action not taken by the user in reliance upon any maps or information provided herein. All datasets may contain errors. The information shown here is not intended to replace evaluation by a competent, licensed professional. In particular, the parcel boundaries are representational only and are not legal definitions of real property, nor are they intended to replace a land survey by a licensed surveyor.

Diane Campbell <dcampbell@providence.utah.gov>

Pool and Retaining wall

Aaron Walker <aaron.walker@loganutah.org> Wed, Jun 9, 2021 at 4:27 PM
To: Diane Campbell <dcampbell@providence.utah.gov>

Hi Diane,
No need to get a fire review on those, but thanks for checking.

Thank you.

[Quoted text hidden]
--
Aaron Walker
Deputy Fire Marshal/Fire Inspector
Logan Fire Department
Office 435-716-9516
Mobile 435-881-8960

pt SE/4 Sec 11 Twp 11 North, Range 1 East

03-127

Scale 1"= 60 Feet

-7-

FOXRIDGE UNIT NO. 7

TAX UNIT 09

LOT 71 SUBDIVISION

LOT 71 SUBDIVISION
FILED 28 APR 1994
FILING NO. 600654
SITE PAGE 02-111
MAP NO. 1994-886

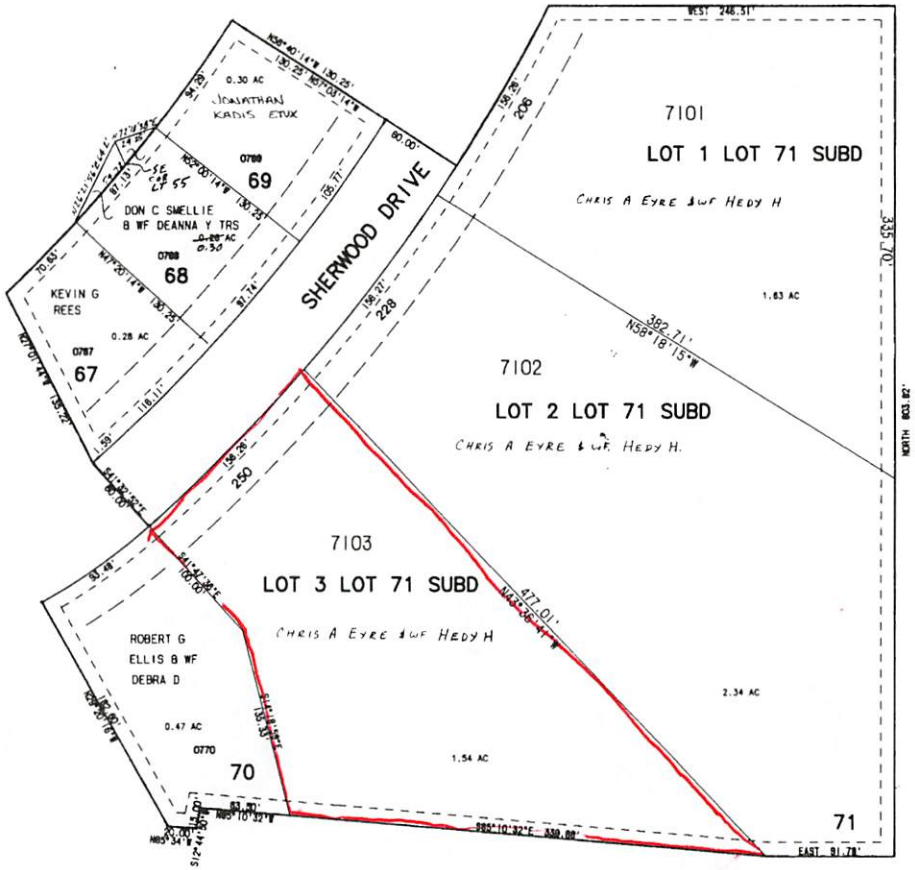

FILED 8 AUG 1990 AS FILING NO. 535443
SITE PAGE 02-111 MAP NO. 1990-763
ALL EASEMENTS ALONG STREET FRONTAGES ARE 10 FT WIDE UTILITIES AND WALKWAY EASEMENTS
ALL OTHER EASEMENTS ARE 7.5 FT WIDE

— — — — BUILDING SET BACK LINE (30' U.N.O.)
— — — — UTILITY EASEMENT
SEE CURVE DATA ON ORIGINAL MAP 1990-763

Printed: 4/12/2021 2:26 PM

Parcel and Zoni viewer

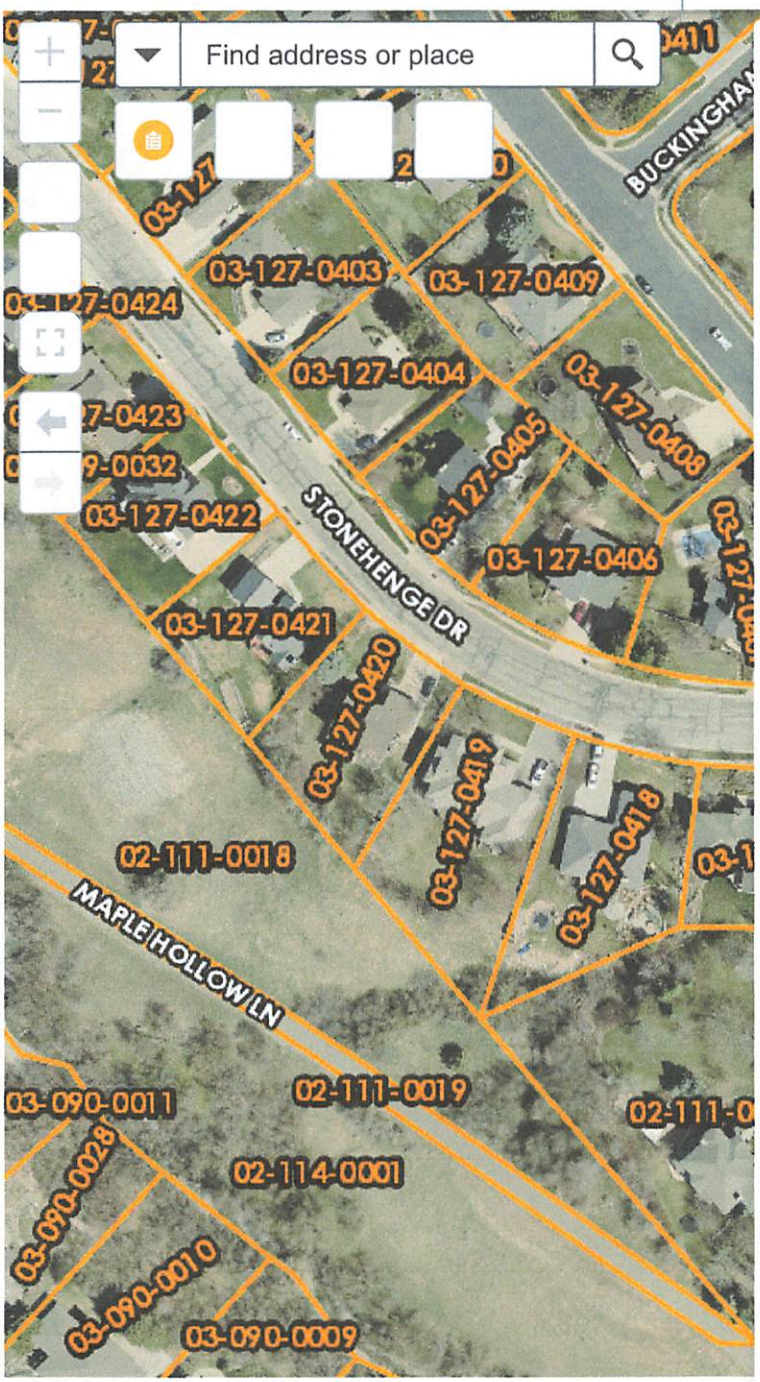

Enhanced Search

By Shape | By Value | By Spatial | Results

Features selected: 1

Parcel ID: 03-127-7103
Owner Name: BRYAN R TR WRIGLEY
Owner Address: 250 S SHERWOOD DR
Owner City State Zip: PROVIDENCE, UT 84332-9688
Property Address: 250 SHERWOOD DRIVE
Property City: PROVIDENCE
Tax District Code: 009
District Code Definition: PROVIDENCE CITY
Legal Acreage: 1.54
Land Type: LAND RESIDENTIAL
Building Type: BUILDING RESIDENTIAL
Building Specific Type: SFR
Year Built: 2005
Building Sq Feet: 2985
Zone Primary: CITY
Zone Primary Description: CITY - Contact Cities for Zoning
Legal Description: LOT 3 OF LOT 71 SUBDIVISION CONT 1.54 AC

Recorder's Plat 1
Recorder's Plat 2
Recorder's Plat 3
Recorder's Plat 4
Recorder's Plat 5
Recorder's Plat 6
Recorder's Plat 7
Recorder's Plat 8
2006 Recorder's Plat
CORE (Cache Online Records Express)

200ft

41°42'06"N 111°47'51"W

228 S Sherwood Dr.

N

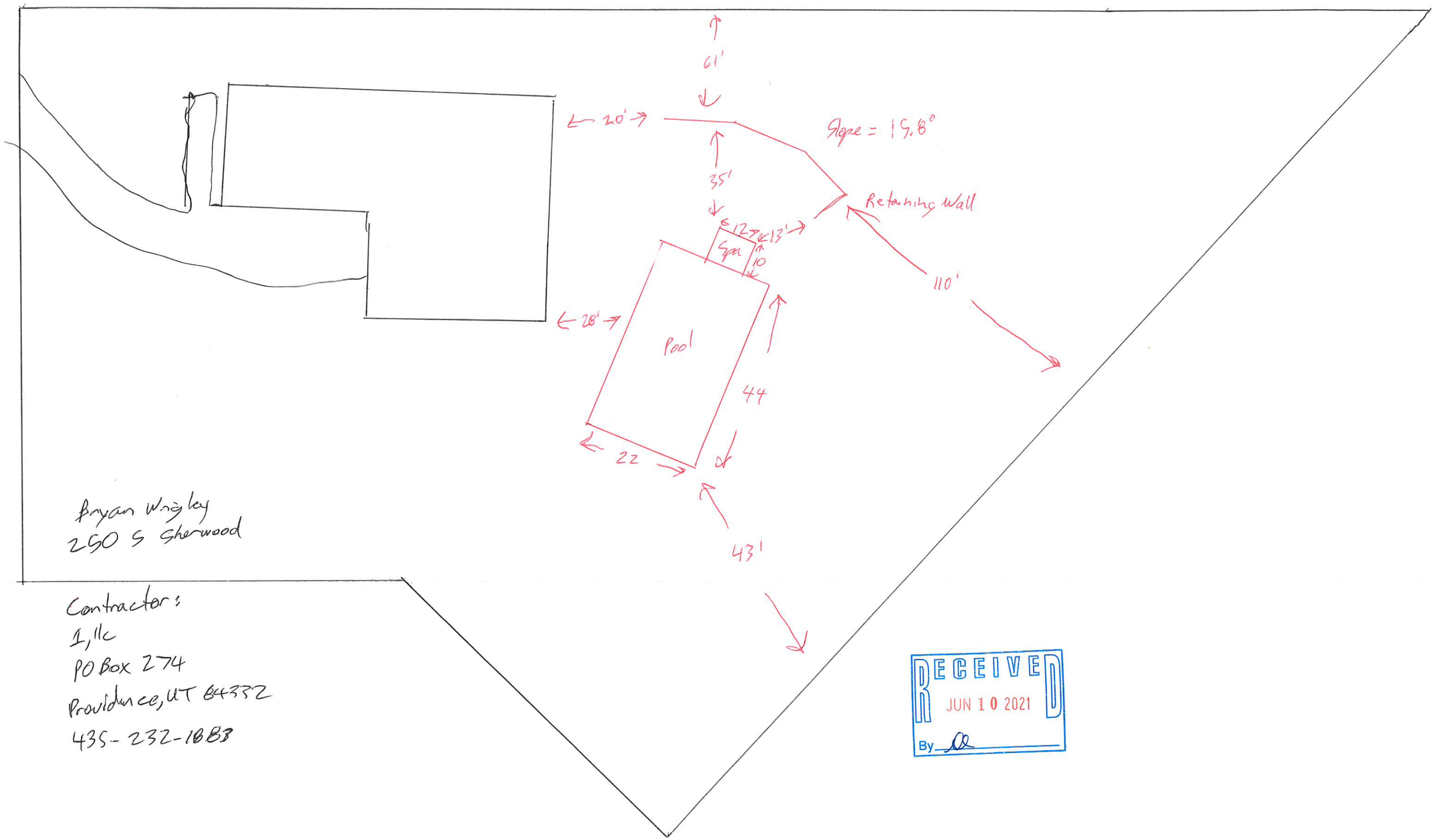

Bryan Wrigley
250 S Sherwood

Contractor:
I, llc
PO Box 274
Providence, UT 84332
435-232-1883

RECEIVED
JUN 10 2021
By

272 Sherwood Dr.

GENERAL NOTES:

1. VISITS TO THE JOB SITE BY REPRESENTATIVES OF THE ENGINEER DO NOT SUBSTITUTE APPROVAL OF THE WORK PERFORMED BY THE CONTRACTOR OR HIS SUBCONTRACTORS AND ARE MERELY FOR THE PURPOSE OF OBSERVING THE WORK PERFORMED.
2. CONTRACTOR SHALL NOTIFY ENGINEER/ARCHITECT OF ANY DISCREPANCIES, OMISSIONS OR CONFLICTS BETWEEN THE VARIOUS ELEMENTS OF THE WORKING DRAWINGS AND/OR SPECIFICATIONS BEFORE PROCEEDING WITH ANY WORK INVOLVED. IN ALL CASES, UNLESS OTHERWISE DIRECTED, THE MOST STRINGENT REQUIREMENTS SHALL GOVERN AND BE PERFORMED.
3. CONTRACTOR SHALL VERIFY ALL CONDITIONS, DIMENSIONS AND ELEVATIONS, ETC., AT THE SITE AND SHALL COORDINATE WORK PERFORMED BY ALL TRADES. SEE ARCHITECT'S PLANS FOR DIMENSIONS. DO NOT SCALE DRAWINGS
4. SHOP DRAWINGS SHALL BE REVIEWED BY THE ENGINEER/ARCHITECT PRIOR TO FABRICATION OR ERECTION FOR ANY PREFABRICATED OR MANUFACTURER-DESIGNED COMPONENTS AND SHALL BE STAMPED BY A PROFESSIONAL ENGINEER REGISTERED IN THE STATE WHERE THIS STRUCTURE RESIDES.
5. SIZES, LOCATIONS, LOADS, AND ANCHORAGES OF EQUIPMENT SHALL BE VERIFIED IN THE FIELD WITH EQUIPMENT MANUFACTURERS (SUPPLIERS) PRIOR TO FABRICATION OR INSTALLATION OF SUPPORTING STRUCTURES.
6. TEMPORARY BRACING SHALL BE PROVIDED WHEREVER NECESSARY TO TAKE CARE OF ALL LOADS TO WHICH THE STRUCTURE MAY BE SUBJECTED, INCLUDING WIND. SUCH BRACING SHALL BE LEFT IN PLACE AS LONG AS MAY BE REQUIRED FOR SAFETY, OR UNTIL ALL THE STRUCTURAL ELEMENTS ARE INSTALLED.
7. DURING AND AFTER CONSTRUCTION THE CONTRACTOR AND/OR OWNER SHALL KEEP LOADS ON THE STRUCTURE WITHIN THE LIMITS OF THE DESIGN LOAD.
8. CONTRACTOR AND ALL SUBCONTRACTORS SHALL PERFORM THEIR TRADES AND DUTIES IN A MANNER CONFORMING TO THE PROCEDURES AND REQUIREMENTS AS STATED IN THE 2018 INTERNATIONAL BUILDING CODE, (OR LATEST ACCEPTED CODE ADOPTED BY THE LOCAL BUILDING OFFICIALS).
9. ANY SPECIAL INSPECTIONS REQUIRED BY THE BUILDING OFFICIAL OR THE INTERNATIONAL BUILDING CODE ARE THE RESPONSIBILITY OF THE OWNER.
10. CONTRACTOR SHALL BE RESPONSIBLE FOR SAFETY AND PROTECTION WITHIN AND ADJACENT TO THE JOB SITE.

CONCRETE NOTES:

1. ALL COLUMNS, RETAINING WALLS AND ALL EXTERIOR FLATWORK, CURBS, GUTTERS, ETC., SHALL BE NORMAL WEIGHT CONCRETE WITH A COMPRESSIVE STRENGTH EQUAL TO AT LEAST 4,000 LBS. PER SQUARE INCH WITHIN 28 DAYS AFTER POURING.
2. ALL SUSPENDED SLABS AND BEAMS SHALL BE NORMAL WEIGHT CONCRETE WITH A COMPRESSIVE STRENGTH EQUAL TO AT LEAST 5,000 LBS. PER SQUARE INCH WITHIN 28 DAYS AFTER POURING.
3. ALL FOOTINGS, FOUNDATIONS, INTERIOR SLABS ON GRADE, AND SUSPENDED SLABS ON DECK SHALL BE NORMAL WEIGHT CONCRETE WITH A COMPRESSIVE STRENGTH EQUAL TO A LEAST 3,000 LBS. PER SQUARE INCH WITHIN 28 DAYS AFTER POURING.
4. UNLESS OTHERWISE NOTED, ALL FOUNDATION WALL VERTICAL COLD JOINTS SHALL BE KEYED WITH A KEY 1-1/2" DEEP, A LENGTH 2" LESS THAN THE MEMBER, AND A WIDTH 1/2 OF THE MEMBER. REINFORCING SHALL BE CONTINUOUS THRU JOINT.
5. ALL OPENINGS IN CONCRETE WALLS SHALL BE REINFORCED WITH (2) #5 BARS EXTENDING 2'-0" MIN. BEYOND THE EDGE OF THE OPENING AT EACH FACE OF OPENING.
6. ALL CONCRETE WORK SHALL BE PLACED, CURED, STRIPPED, AND PROTECTED AS DIRECTED BY THE SPECIFICATIONS AND ACI STANDARDS AND PRACTICES.
7. BEFORE CONCRETE IS POURED CHECK WITH ALL TRADES TO INSURE PROPER PLACEMENT OF ALL OPENINGS, SLEEVES, CURBS, CONDUITS, BOLTS, INSERTS, ETC. RELATIVE TO WORK.
8. CONTRACTOR IS RESPONSIBLE FOR ALL SHORING AND FORMWORK.
9. REFER TO ARCHITECTURAL DRAWINGS FOR MOLDS, GROOVES, ORNAMENT, CLIPS OR GROUNDS, REQUIRED TO BE ENCASED IN CONCRETE AND FLOOR LOCATION OF FLOOR FINISHES AND SLAB DEPRESSIONS.
10. FOR STEPS IN FOUNDATION GREATER THAN 2 FEET, WRAP CORNER W/(2) #4 BARS EXTENDING 18" EACH DIRECTION.
11. STRUCTURAL CONCRETE HAS BEEN DESIGNED AT 2,500 LBS. PER SQUARE INCH AND SPECIFIED AT A HIGHER STRENGTH CONCRETE AS STATED ABOVE. NO SPECIAL INSPECTIONS ARE REQUIRED PER IBC SECTION 1705.3.

REINFORCING STEEL NOTES:

1. ALL REINFORCING BARS SHALL CONFORM TO ASTM STANDARD A-615 GRADE 60. ALL WELDED WIRE FABRIC SHALL CONFORM TO ASTM STANDARD A-185, SHALL BE SUPPLIED IN FLAT SHEETS AND SHALL HAVE A MIN. SIDE LAP OF 8 INCHES. ADEQUATELY TIE AND SUPPORT ALL REINFORCING STEEL AS SPECIFIED BY ACI 315 TO MAINTAIN EXACT REQUIRED POSITION. ALL FIELD BENT DOWELS SHALL BE GRADE 40 WITH SPACING INDICATED REDUCED BY 1/3.
2. REINFORCEMENT SHALL HAVE THE FOLLOWING CONCRETE COVERAGE:
   A. CAST AGAINST AND PERMANENTLY EXPOSED TO EARTH_____3"
   B. EXPOSED TO EARTH OR WEATHER:
      #6 & LARGER_____2"
      #5 & SMALLER_____1 1/2"
   C. NOT EXPOSED TO WEATHER OR EARTH:
      SLABS, WALLS, JOISTS, #11 & SMALLER_____3/4"
      BEAMS, COLUMNS: MAIN REINFORCING OR TIES_____1 1/2"
   D. SLAB ON GRADE:
      PLACE REINFORCING AT CENTER OF SLAB UNLESS INDICATED OTHERWISE.
3. EXCEPT WHERE NOTED, CONTINUOUS REINFORCEMENT SHALL BE SPLICED AT POINTS OF MIN. STRESS BY LAPPING 44 BAR DIAMETERS IN CONCRETE AND 50 BAR DIAMETERS IN MASONRY.
4. ALL VERTICAL REINFORCING SHALL BE DOWELED TO FOOTINGS OR STRUCTURE BELOW WITH DOWELS TO MATCH. SPLICE LENGTHS SHALL COMPLY WITH NOTE 3. DOWELS INTO FOOTINGS SHALL TERMINATE WITH A STANDARD HOOK, AND SHALL EXTEND TO WITHIN 4" OF THE BOTTOM OF THE FOOTING, BUT NOT MORE THAN 20" INTO FOOTING.
5. DO NOT WELD REINFORCING EXCEPT AS NOTED ON PLANS. WHERE REINFORCING IS WELDED, USE ASTM A706 REINFORCING.

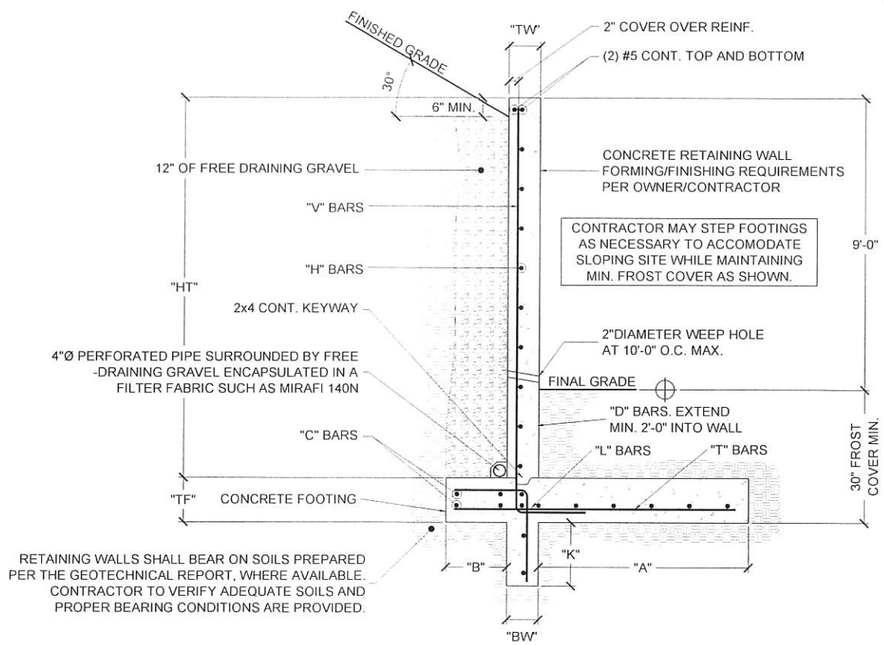

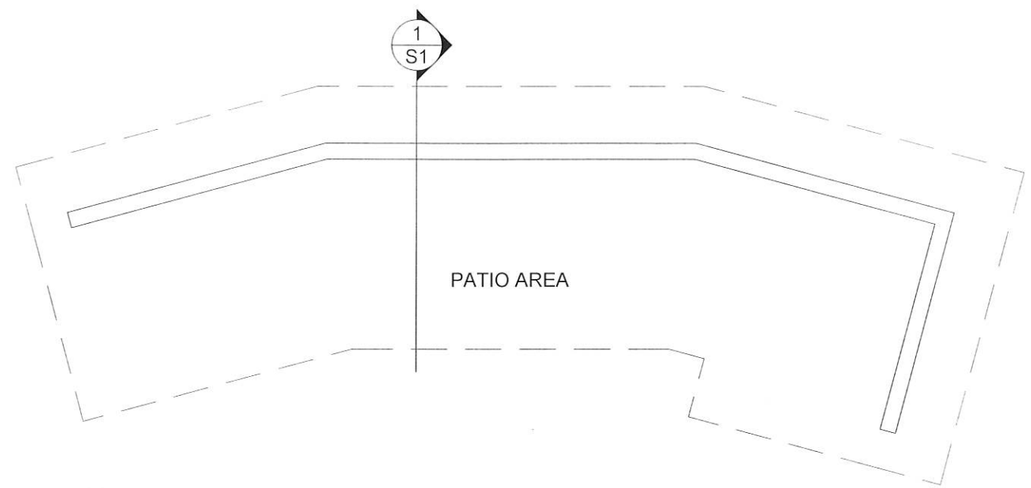

2 DETAIL
SCALE: NONE

1500 psf BEARING PRESSURE CONCRETE RETAINING WALL SCHEDULE

MARK	"HT"	"A"	"B"	"TW" / "BW"	"TF"	"K"	"V" BARS SIZE	"V" BARS SPACE	"H" BARS SIZE	"H" BARS SPACE	"T" BARS SIZE	"T" BARS SPACE	"C" BARS SIZE	"C" BARS SPACE	"L" BARS SIZE	"L" BARS SPACE	NOTES:
CRW-1	10'-4"	5'-0"	1'-6"	10"/10"	14"	16"	#5	6" O.C.	#5	15" O.C.	#5	12" O.C.	#5	12" O.C.	#5	12" O.C.	-

CONCRETE RETAINING WALL NOTES:

1. CONCRETE TO HAVE A MINIMUM COMPRESSIVE STRENGTH OF 4,500 PSI
2. REINFORCING BAR TO BE GRADE 60 REBAR.
3. "V" BARS SHALL NOT BE SPLICED BELOW MID-HEIGHT OF WALL.
4. FOR WALLS WITH "HT" OF 9'-0" AND GREATER, ONE HALF OF THE "V" BARS CAN BE DISCONTINUED FROM MID-HEIGHT TO TOP OF WALL.
5. SPECIAL INSPECTION OF REBAR PLACEMENT IS REQUIRED. COPIES OF THESE REPORTS ARE TO BE SENT TO THE ARCHITECT AND ENGINEER OF RECORD.

1 DETAIL
SCALE: NONE

RECEIVED
JUN 10 2021
By

Notice

Reeve & Associate's, Inc., has authorized this copy only if the seal is in black ink and the signature is in red or blue ink. We assume responsibility only for the items addressed herein and do not assume responsibility for the remainder of the structure. No site observations are scheduled to verify the understanding of the contractor or the proper installation.

THIS STAMP IS NOT VALID IF SIGNATURE IS NOT SIGNED IN RED INK
PROFESSIONAL ENGINEER
JEFFERY M. TURVILLE
9412168
06/08/2021
STATE OF UTAH
STRUCTURAL DRAWINGS ONLY

Reeve & Associates, Inc.
5160 SOUTH 1500 WEST, RIVERDALE, UTAH 84405
TEL (801) 621-3100 FAX (801) 621-2666 www.reeve-assoc.com
LAND PLANNERS • CIVIL ENGINEERS • LAND SURVEYORS
TRAFFIC ENGINEERS • STRUCTURAL ENGINEERS • LANDSCAPE ARCHITECTS

WRIGLEY RETAINING WALL
250 SOUTH SHERWOOD DR.
PROVIDENCE, UTAH

FOOTING & FOUNDATION PLAN

Project Info.

Engineer: J.M.T.
Drafter: Z.M.B.
Begin Date: JUNE 7, 2021
Number: 7478-10

Sheet S1 | S1 Sheets

THESE PLANS AND SPECIFICATIONS ARE THE PROPERTY OF REEVE & ASSOCIATES, INC., 5160 SOUTH 1500 WEST, RIVERDALE, UTAH 84405, AND SHALL NOT BE PHOTOCOPIED, RE-DRAWN, OR USED ON ANY PROJECT OTHER THAN THE PROJECT SPECIFICALLY DESIGNED FOR, WITHOUT THEIR WRITTEN PERMISSION. THE OWNERS AND ENGINEERS OF REEVE & ASSOCIATES, INC. DISCLAIM ANY LIABILITY FOR ANY CHANGES OR MODIFICATIONS MADE TO THESE PLANS OR THE DESIGN THEREON WITHOUT THEIR CONSENT.

Structural Pool Calculations

for

Wrigley Residence
250 South Sherwood Drive
Providence, Utah

submitted to:

1 LLC, Lev Siporin

Reeve & Associates, Inc.

Solutions you can build on

contact:

Jeff Turville, PE

5160 South 1500 West

Riverdale, UT 84405

801.621.3100

Jturville@reeve-assoc.com

PROFESSIONAL ENGINEER
JEFFERY M. TURVILLE
9412168
03/31/2021
STATE OF UTAH

Notice

Reeve & Associate's, Inc., has authorized this copy only if the seal is in **black** ink and the signature is in **red** or **blue** ink. We assume responsibility only for the items addressed herein and do not assume responsibility for the remainder of the structure. No site observations are scheduled to verify the understanding of the contractor or the proper installation of the items addressed herein

March 30, 2021

Project # **7478-05**

Design Criteria

Governing Building Code: 2018 International Building Code
Type of Construction: Polymer Pool Walls

Construction Materials

Concrete 28-Day Compressive Strength
Footings: f'_c = 4500 psi (2500 psi Design)
Slabs on Grade: f'_c = 4500 psi (2500 psi Design)
Reinforcing Grade: ASTM A615 Grade 60

Soil Criteria

Geotechnical Consultant: None
Report Number: None
Bearing Pressure: 1500 psf (Assumed)
(Owner/Contractor to verify proper bearing conditions are provided)

Reeve & Associates, Inc.
Solutions You Can Build On
5160 South 1500 West • Riverdale, Utah 84405
Tel: 801-621-3100
Fax: 801-621-2666
Email: jturville@reeve-assoc.com
Website: www.reeve-assoc.com

Reeve & Associates, Inc.

Land Planners · Civil Engineers · Land Surveyors
Traffic Engineers · Structural Engineers · Landscape Architects
5160 South 1500 West – Riverdale, UT 84405
Phone: (801) 621-3100
Fax: (801) 621-2666

Project Name		Sheet	Of
Polymer Pool Design		1	2
Number	**Date**	**Designer**	
7478-05	3/30/2021	JT	

Project Design Data

Concrete

f'c:	2500	lb/in^2
Unit Weight:	145	lb/ft^3
Thickness:	12	in
Strip Width:	24	in

Soil

Soil Bearing:	1500	lb/ft^2
Unit Weight:	105	lb/ft^3
Soil Friction Angle:	30	deg
Lateral Coefficient, K:	0.333	
Friction Factor:	0.45	(concrete to soil)

Wall panels

Wall Panels, frames, and braces, etc. to be provided by manufacturer.

Hydra Panel by Hydra Pools

- Vinyl-Lined In-Ground Polymer Wall Residential Swimming Pools

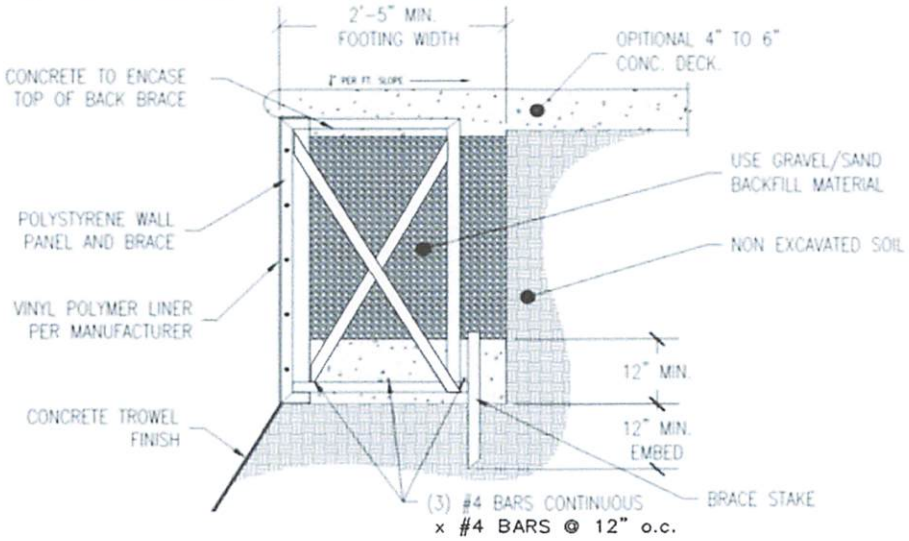

Important Notes:

1. This pool system has not been designed to withstand seismic events or additional surcharge loading from outside sources, such as adjacent structures, vehicles, etc.
2. The pool has been designed to remain full at all times. In the event that the pool must be drained (liner replacement, etc.) the manufacturer should be contacted for instructions.
3. The installer shall be a trained installer/contractor for the pool manufacturer. The installation manual from the manufacturer shall be utilized for additional information during installation.

4. The pool has been designed using the assumed soil values listed in these calculations. Factors such as expansive soils, high water table, low bearing capacity, inadequate compaction of fill material, etc. have not been considered. If any questionable soils are discovered during excavation, a geotechical engineer shall be contacted for additional information. The contractor is responsible to verify adequate soils are in place prior to construction.
5. The polystrene members such as panels and braces and nylon fasteners should be provided by the manufacturer. Alternate materials should not be used without written approval from the manufacturer and the design engineer.

Reeve & Associates, Inc.
Land Planners · Civil Engineers · Land Surveyors
Traffic Engineers · Structural Engineers · Landscape Architects
5160 South 1500 West -- Riverdale, UT 84405
Phone: (801) 621-3100
Fax: (801) 621-2666

Project Name		Sheet	Of
Polymer Pool Design		2	2
Number	**Date**	**Designer**	
7478-05	3/30/2021	JT	

Check Overturning

Overall Height:	3.333	ft
Soil Height:	2.333	ft

Resisting Moment

Soil Weight:	489.93	lbs/ft
Concrete Weight:	290	lbs/ft
Moment Arm:	12	in
Total Resisting:	779.93	lb-ft

Overturning Moment

Lateral Soil Load:	194.406	lbs
Moment Arm:	1.111	ft
Total Overturning:	215.985	lb-ft

Factor of Safety: **3.6** **OK**

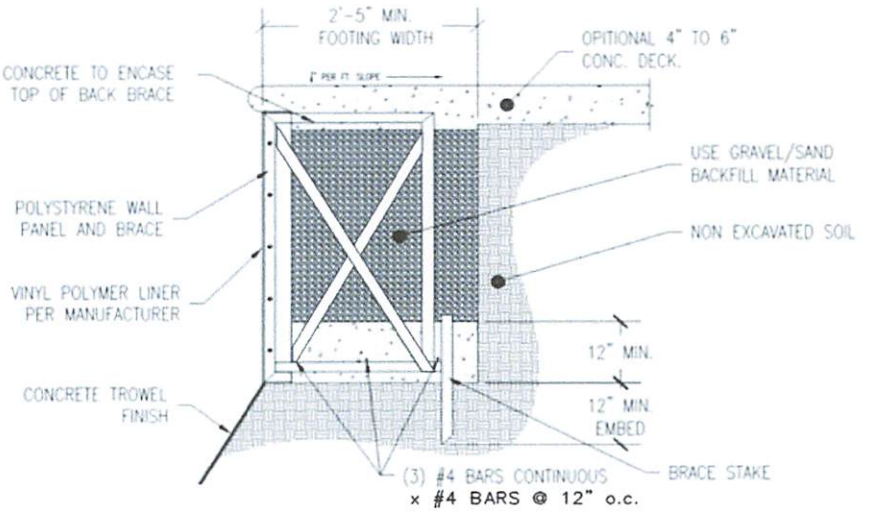

Check Sliding

Sliding Resistance

Soil Weight:	489.93	lbs/ft
Concrete Weight:	290	lbs/ft
Friction Factor:	0.45	
Sliding Resistance:	350.9685	lbs/ft

Sliding Force

Lateral Soil Load:	194.40556	lbs/ft

Factor of Safety: **1.8** **OK**

Check Bearing

Eccentricity:	0.277	ft
L/6:	0.333	ft
Bearing Load:	713.942	lbs/ft^2
Allowable Load:	1500	lbs/ft^2

Factor of Safety: **2.1** **OK**

Important Notes:

1. This pool system has not been designed to withstand seismic events or additional surcharge loading from outside sources, such as adjacent structures, vehicles, etc.
2. The pool has been designed to remain full at all times. In the event that the pool must be drained (liner replacement, etc.) the manufacturer should be contacted for instructions.
3. The installer shall be a trained installer/contractor for the pool manufacturer. The installation manual from the manufacturer shall be utilized for additional information during installation.

4. The pool has been designed using the assumed soil values listed in these calculations. Factors such as expansive soils, high water table, low bearing capacity, inadequate compaction of fill material, etc. have not been considered. If any questionable soils are discovered during excavation, a geotechical engineer shall be contacted for additional information. The contractor is responsible to verify adequate soils are in place prior to construction.
5. The polystrene members such as panels and braces and nylon fasteners should be provided by the manufacturer. Alternate materials should not be used without written approval from the manufacturer and the design engineer.

REVISION HISTORY				
REV	DESCRIPTION	DATE	ECO	BY
A	RELEASED FOR QUOTE	3/11/2021		ADOLD

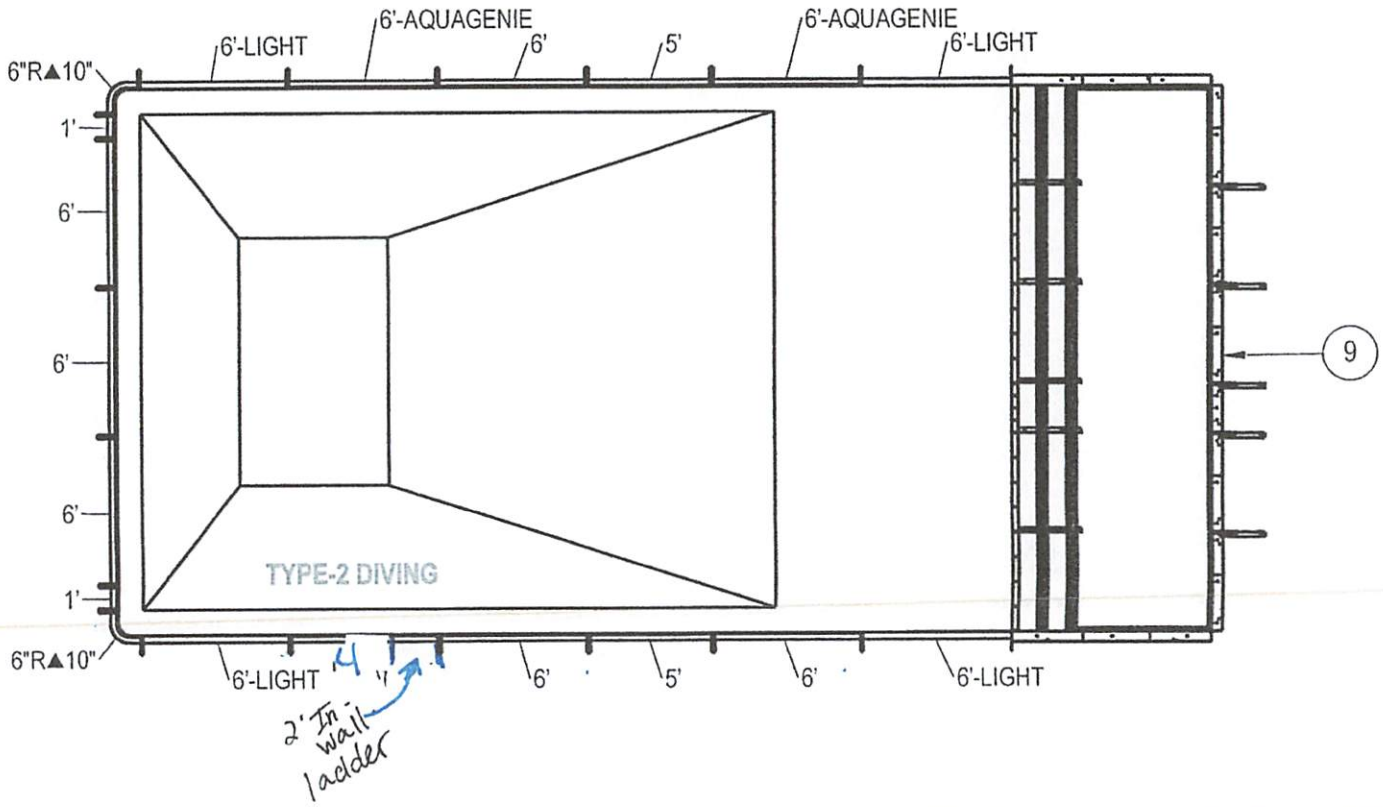

NOTES:

1. THESE ARE FINISHED DIMENSIONS READY FOR THE LINER.
2. DIMENSIONS ARE FROM INSIDE POOL PANELS.
3. ROPE AND FLOAT ASSEMBLY SHOULD BE INSTALLED IN ACCORDANCE WITH CURRENT ANSI/ASPS/ICC REGULATIONS
4. HYDRA LINER TRACK FOR STEPS IS INSTALLED WITH THE BARB FACING THE RISER WALL ON THE STEP.

EXCAVATION NOTES:

5. ROUGH EXCAVATION SHOULD BE 2" DEEPER IN EACH INSTANCE.
6. SOIL TO HAVE MINIMUM BEARING CAPACITY OF 1500 PSF.
7. LOCATE TOP OF POOL AT LEAST 6" ABOVE THE SURROUNDING LAND ELEVATION.
8. SEE "OVER DIG DETAIL", IN INSTALLATION MANUAL, FOR EXCAVATION AROUND POOL.
9. FILL VOIDS UNDER BASE OF PANELS AND TAMP WELL.
10. BACK FILL WITH NON-EXPANSIVE MATERIAL.
11. FOLLOW ALL CURRENT ANSI / APSP / ICC GUIDELINES FOR RESIDENTIAL POOLS

IMPORTANT NOTES:

THIS DOCUMENT IS FOR ILLUSTRATIVE PURPOSES ONLY. THE DEALER OR CONTRACTOR WHO SELLS OR INSTALLS YOUR POOL IS AN INDEPENDENT CONTRACTOR AND IS NOT AN AGENT OF THE MANUFACTURER. THE CONSTRUCTION METHODS ILLUSTRATED HERE ARE SUGGESTIONS AND APPLY ONLY TO NORMAL GROUND CONDITIONS. THERE MAY BE ADDITIONAL PRECAUTIONS AND/OR METHODS OF CONSTRUCTION. PROPER INSTALLATION IS THE RESPONSIBILITY OF THE DEALER/BUILDER/CONTRACTOR.

ITEM	FILE NAME	DESCRIPTION	CUSTOMER DRAWING #	VENDOR PART #	QTY.
1	BRACE	BRACE, 4 TAB, HYDRA - 200 SERIES	HP299	HP299	24
2	00035790	LAYOUT, 22' X 44', RECTANGLE, 6" RADIUS, 8'6" DEEP, HSSM28904, 1- LIGHT, 1- INLET, 2-AQUA GENIE, 100 SERIES	00035790		1
3	PANEL, 1' LONG	PANEL, 1' LONG - 100 SERIES	HP101	HP101	2
4	PANEL, 5' LONG	PANEL, 5' LONG - 100 SERIES	HP105	HP105	2
5	PANEL, 6 IN RADIUS, 6 IN X 6IN	PANEL, 6" RADIUS - 100 SERIES	HP156	HP156	2
6	PANEL, 6' LONG	PANEL, 6' LONG - 100 SERIES	HP106	HP106	7
7	PANEL, 6' LONG WITH AQUA GENIE	PANEL, 6' LONG WITH AQUA GENIE - 100 SERIES	HP106A	HP106A	2
8	PANEL, 6' LONG WITH LIGHT	PANEL, 6' LONG WITH LIGHT - 100 SERIES	HP106L	HP106L	4
9	00028464	STEP, 8' X 22', 6" RADIUS, OPEN FOUR, TANNING LEDGE, MODULAR	HSSM28464	00028464	1

ENGINEERING DRAWING NUMBER: 00035790

WEIGHT: lbs
VOLUME: Inch³
COLOR
HEAT TREAT
FINISH
TEXTURE

UNLESS OTHERWISE SPECIFIED
DIMENSIONS ARE IN INCHES
TOLERANCES
DECIMALS: X ± .1
XX ± .01
XXX ± .001
XXXX ± .0005
ANGULAR: X ± 0.5
THIRD ANGLE PROJECTION

DESIGNED BY: adold — CREATION DATE: 5/20/2013
DETAILED BY: adold — DETAILED DATE: 3/11/2021
LAST REVISED BY: adold — LAST REVISED DATE: 3/11/2021
MATERIAL

HYDRA POOLS

TITLE: LAYOUT, 22' X 44', RECTANGLE, 6" RADIUS, 8'6" DEEP, HSSM28904, 1- LIGHT, 1- INLET, 2-AQUA GENIE, 100 SERIES

PART NUMBER: 00035790
SCALE: 1:84
SHEET: 1 OF 4
SIZE: A

C:\PDM2020\Hydra Pools\Layouts\00035790

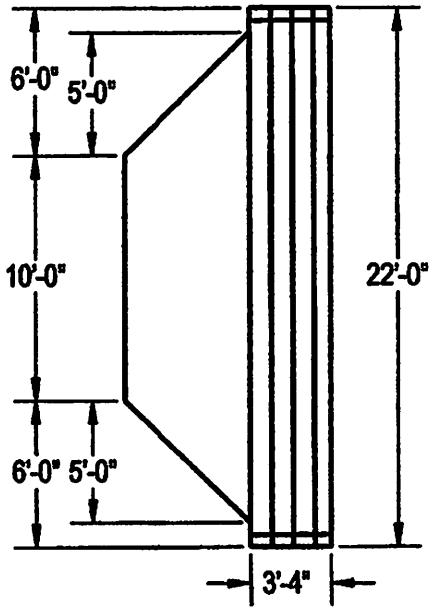

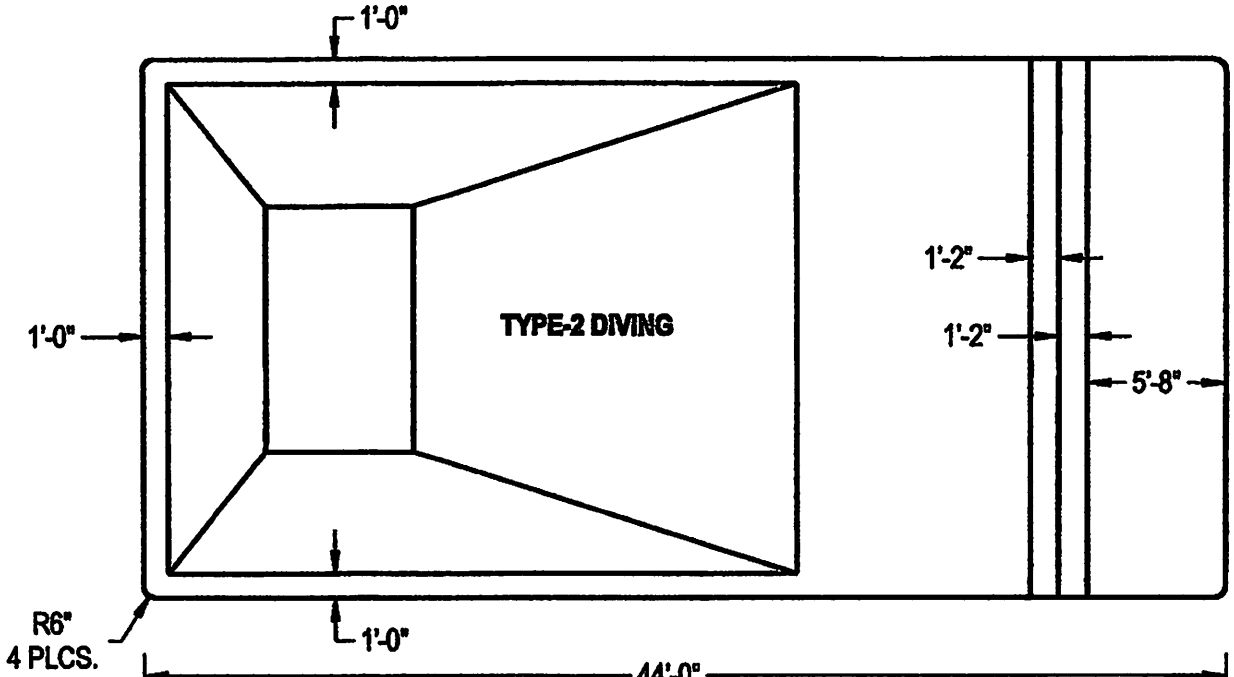

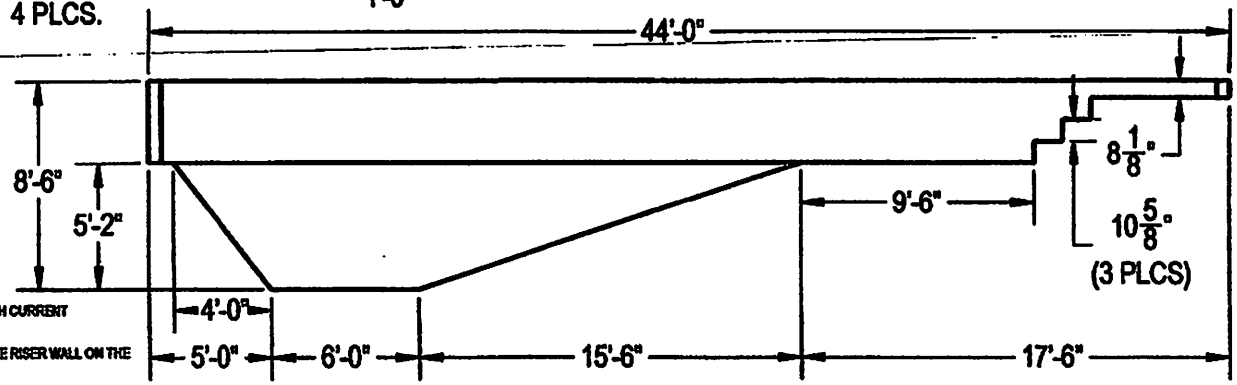

AREA	PERIMETER	VOLUME
SQ. FT.	FT.	U.S. GALLONS
967.80	131.14	30905.74

NOTES:

1. THESE ARE FINISHED DIMENSIONS READY FOR THE LINER.
2. DIMENSIONS ARE FROM INSIDE POOL PANELS.
3. ROPE AND FLOAT ASSEMBLY SHOULD BE INSTALLED IN ACCORDANCE WITH CURRENT ANSI/ASPS/ICC REGULATIONS
4. HYDRA LINER TRACK FOR STEPS IS INSTALLED WITH THE BARB FACING THE RISER WALL ON THE STEP.

EXCAVATION NOTES:

5. ROUGH EXCAVATION SHOULD BE 2" DEEPER IN EACH DISTANCE.
6. SOIL TO HAVE MINIMUM BEARING CAPACITY OF 1500 PSF.
7. LOCATE TOP OF POOL AT LEAST 6" ABOVE THE SURROUNDING LAND ELEVATION.
8. SEE "OVER DIG DETAIL", IN INSTALLATION MANUAL, FOR EXCAVATION AROUND POOL.
9. FILL VOIDS UNDER BASE OF PANELS AND TAMP WELL.
10. BACK FILL WITH NON-EXPANSIVE MATERIAL.
11. FOLLOW ALL CURRENT ANSI / APSP / ICC GUIDELINES FOR RESIDENTIAL POOLS

IMPORTANT NOTE:

THIS DOCUMENT IS FOR ILLUSTRATIVE PURPOSES ONLY. THE DEALER OR CONTRACTOR WHO SELLS OR INSTALLS YOUR POOL IS AN INDEPENDENT CONTRACTOR AND IS NOT AN AGENT OF THE MANUFACTURER. THE CONSTRUCTION METHODS ILLUSTRATED HERE ARE SUGGESTIONS AND APPLY ONLY TO NORMAL GROUND CONDITIONS. THERE MAY BE ADDITIONAL PRECAUTIONS AND/OR METHODS OF CONSTRUCTION. PROPER INSTALLATION IS THE RESPONSIBILITY OF THE DEALER/BUILDER/CONTRACTOR.

WEIGHT: lbs	UNLESS OTHERWISE SPECIFIED DIMENSIONS ARE IN INCHES TOLERANCES DECIMALS: X ± .1 XX ± .01 XXX ± .001 XXXX ± .005 ANGULAR: X ± 0.5 THIRD ANGLE PROJECTION	DESIGNED BY: adold	CREATION DATE: 4/3/2013	HYDRA POOLS
VOLUME: 30905.74 liters		DETAILED BY: adold	DETAILED DATE: 2/11/2021	
COLOR:		LAST REVISED BY: adold	LAST REVISED DATE: 2/11/2021	TITLE: LAYOUT, 22' X 44', RECTANGLE, 6' RADIUS, 5'6" DEEP, HSS#28904, 1- LIGHT, 1- INLET, 2-AQUA GENIE, 100 SERIES
HEAT TREAT:		MATERIAL:		
FINISH:				
TEXTURE:		SIZE: A	SHEET: 2 OF 4	SCALE: 1:96
				PART NUMBER: 00035790 REV

ENGINEERING DRAWING NUMBER: 00035790

REV. LEVEL: A REV. DATE: JULY 29, 2015 DOCUMENT ID: CF7300, ANSI A LANDSCAPE

C:\P DM2\DWG\3-D Pools\Layouts\ Pool00035790

Reeve
& Associates, Inc.

PROVIDENCE CITY Land Use Authority – Staff Report Meeting Date: June 16, 2021		
Request: Applicant is requesting approval of a conditional use and zoning approval for a residential site plan for a townhome building (5-plex) at 533 N through 549 N, 100 E, Providence UT. (Vineyard Townhome Bldg. 11)		
Item Type: Conditional Use	**Applicant:** Visionary Homes	**Property Address:** 533 through 549 N 100 E., Providence UT
Parcel ID #: 02-301-0084 to 88	**General Plan**: LCR	**Zone**: LCR
Background Information: Complete Application was received June 11, 2021; application contained: 1. Providence City Conditional Use application and Residential Site Plan application 2. Payment of $100 application fee. Rob Stapley, Providence City Public Works Director, inspected the current infrastructure on June 14, 2021.		

FINDINGS OF FACT:

1. UCA 10-9a-507. Conditional Uses allow a municipality to adopt a land use ordinance that includes conditional uses and provisions for conditional uses that require compliance with standards set for in an applicable ordinance.
2. Providence City Code (PCC) 10-5 Sensitive Areas, Section 1 Conditional use permit required states, all requests for permits involving a lot, parcel or site located wholly or partially within an area subject to the Hazard Flood (HF), Hazard Slope (HS), Hazard Water Table (HW) or Hazard Earthquake Primary Fault (HE), Hazard Wildfire (WF) regulations, shall be dealt with as a request for a conditional use permit under the provisions of Section 10-3-5 of this Title. All applications shall comply with the following regulations before any permit shall be issued.
3. PCC 10-3-5 Conditional Use Permits allows the City to impose reasonable conditions: to mitigate the reasonably anticipated detrimental effects of the proposed use on the health, safety, or general welfare of persons residing, working, or conducting business in the vicinity; to mitigate injury to property in the vicinity; to mitigate any risk to safety of persons or property because of vehicular traffic or parking, large gatherings of people, or other causes.

CONCLUSIONS OF LAW:

1. Providence City has adopted land use ordinances that include conditional uses and provisions for conditional uses.
2. This parcel is in a Hazard Water Table area.
3. Providence City has the authority to impose reasonable conditions to mitigate the reasonably anticipated detrimental effects of the proposed use.
4. The request meets the requirements of the Codes listed in the Findings of Fact with the following conditions:

CONDITIONS:

1. The applicant will continue to meet all relevant federal, state, county, and Providence City rules, laws, codes, and ordinances.
2. The applicant will mitigate Hazard Water Table by: See High Water Mitigating Strategies.

DRAFT

3. This conditional use is for the townhomes only as shown on the site plan date stamped June 14, 2021.
4. Payment of fees listed on the Providence City Zoning Permit.
5. Approval by the City of any submitted application or paperwork does not alleviate the owners and/or their agents from their responsibility to understand and conform to local, state, and federal laws. Providence City's approval is not intended to and cannot be construed to allow any laws to be violated.

DRAFT

FOR OFFICE USE ONLY
Date _____
Payment Form _____
Amount_____
Receipt #_____
Clerk
_____

PROVIDENCE CITY
APPLICATION FOR A CONDITIONAL USE

Please Note: City Staff will NOT accept the application and fee payment if they are incomplete. Incomplete applications will NOT be processed or scheduled for review by the City.

Initial JW **Name** Jessica Williamson

Date 6/10/21

SUBMITTAL REQUIREMENTS **Staff Check**

- $100 application fee _____
- An 11"x17" of the property showing the location, function and characteristics of the use, including parking and percentage of space being used _____
- Cache County plat map of the property
- Copy of Cache County GIS Parcel Summary _____
  http://66.232.67.238/Websites/Parcel%20and%20Zoning%20Viewer/
- Mitigation Strategies for applicable sensitive areas _____
- Mailing addresses for the owners of adjacent properties _____
- Property owner consent for pursuit of conditional use (if owner is different than Applicant) _____
- Electronic copy of structure elevations & square footage including attached garage(s), covered porches, covered decks etc. _____
- Electronic copy of **ALL** submittals (email or flash drive is acceptable) _____

Applicant Information (all information MUST be provided)

Name VHD LLC
Address 50 E 2500 N Ste. 101 North Logan, UT 84341
Phone 435-752-1480 Email jessica@visionaryhomes.com

Party Responsible for Payment (if different than applicant)- the individual/firm to whom any and all professional services invoices (attorney/engineer/etc.) will be sent and who will be responsible for payment of such invoices.
Name_____
Address_____
Phone_____Email_____

Property Information
Owner of record VHD LLC
Owner address 50 E 2500 N Ste. 101 North Logan, UT 84341
Owner phone 435-752-1480 Owner email jessica@visionaryhomes.com
Parcel address Bldg. 11 532-548 N 100 E, Units 84-88 Parcel Tax I.D. 02-301-0084-88
Zone_____ Height 32' Initial JW
Setbacks (front yard) _____ (side yard) _____ (rear yard) _____ Initial JW

Written Statement of Request (attach additional sheets if necessary)

- Briefly explain why you are seeking a conditional use and what the intended use of the property will be if the conditional use is granted.

We are seeking a conditional use permit to begin construction on 5 townhome buildings.

Property owner and contractor shall have responsibility to determine grades, and final placement and elevations of footings/foundations. Property owner and contractor shall be responsible for compliance with all state, national and local building codes and ordinances. Initial JW **Name** Jessica Williamson

Approval by the city of any application submittal or paperwork does not alleviate the owners from their responsibility to understand and conform to local, state and federal laws. Providence City's approval is not intended to and cannot be construed to allow any laws to be violated. Initial JW

By signing this document, you agree that Providence City will bill you for any and all professional firm fees as they arise throughout the approval process. This is in addition to application fees. All subdivisions require engineering review throughout the approval process, such as but not limited to reviews of development agreements, construction drawings, preliminary and final plats, and inspections. These services are billed by our city engineer at an hourly rate. Some subdivision applications may also require legal review. Other applications, such as but not limited to conditional uses, may also require engineering and/or legal review at the City's discretion. You agree to reimburse the City for all such costs, whether or not you were forewarned about such costs, and that the City cannot predict all situations in which professional services may be required in order to process your application. Initial JW

I declare under penalty of perjury that I am making this application of my own free will and choice and that the statements, answers, and documents submitted in connection with this application are true and correct to the best of my knowledge.

Jessica Williamson	Jessica Williamson/VHD LLC	6/10/21
Signature of Applicant	Printed Name	Date

The following is a general summary of which body reviews each land use application in Providence City. Public hearings may be required by the Planning Commission and City Council, as shown below. This matrix does not include zoning clearance/permits for new single-home construction or for business licenses, both of which are reviewed and approved by city staff.

Application	Executive Staff	Land Use Authority	Planning Commission	Public Hearing	City Council	Public Hearing	Appeal Authority	Filing Fee[1]
Code Amendment	✓	----	✓	✓[2]	✓	----	----	$100
Annexation	✓	----		----	✓	✓	----	$150
Rezone	✓	----	✓	✓	✓	----	----	**$100**
Conditional Use	✓	✓		----	----	----	----	**$100**
Subdivision Concept Plan	✓	----	----	----	----	----	----	$300
Preliminary Subdivision Plat	✓	----	✓	----	----	----	----	$400
Final/Amended Subdivision Plat[3]	✓	----	✓	----	✓[4]	----	----	$600
Site Plan	✓	✓	----	----	----	----	----	$50
Lot Consolidation[5]	✓	----	✓	----	----	----	----	$50
Exception to Title[6]	✓	----	✓	----	✓	----	----	$100
General Plan Amendment	✓	----	✓	✓	✓	----	----	$100
Right-of-Way Vacation	✓	----	✓	----	✓	✓	----	$100
Variance/ Appeal	----	----	----	----	----	----	✓	$100

[1] Filing Fees do **not** include professional firm review fees. Those will be billed to the applicant separately.
[2] Public Hearing required at Planning Commission only when the proposed code amendment is related to land use.
[3] Construction drawings are reviewed/approved by the City Engineer and Public Works Director.
[4] The City Council does not review the final plat itself, but rather reviews and approves the development agreement associated with the final plat.
[5] Lot consolidations are only required to have City approval when they are in a platted/recorded subdivision.
[6] Developers may ask for an exception from the requirements of the Providence City Subdivision Code (Title 11) through this process. All other variance/exception requests shall be handled by the Appeal Authority.

164 N. Gateway Dr * Providence UT 84332
435-752-9441 * Fax: 435-753-1586 * email: sbankhead@providence.utah.gov

Residential Site Plan Application

FOR OFFICE USE ONLY
Date _____
Payment Form _____
Amount_____
Receipt #_____
Clerk _____

Date: 6/10/21

Required Submittals

Please Note: City Staff will NOT accept the application and fee payment if they are incomplete. Incomplete applications will NOT be processed or scheduled for review by the City. Application fees do not include professional firm fees, which will be billed separately. Engineered site plans may, at the City's discretion, be required. The City will contact the applicant if an engineered site plan is deemed necessary. Accessory buildings include sheds (over 200 sq ft) and all detached buildings (shop, garage, etc.)

Name Jessica Williamson/VHD LLC **Initial** JW

Construction Type	Application	Filing Fee $50- New Home $25- all other	11x17 Site Plan Must Include:			Cache County Plat Map	Stormwater NOI Permit	Stormwater Pollution Prevention Plan (SWPPP)
			Existing & proposed buildings, dimensions, & setbacks	Existing/ proposed utilities	Dimensions of driveway cut – (35' max)			
New Home								
Acc. Building							*	*
Addition							*	*
Deck							*	*
Other								

*May not apply in all cases

Applicant Information

Name: VHD LLC
Mailing address: 50 E 2500 N Ste 101 North Logan, UT 84341
Telephone: 435-752-1480 Email: jessica@visionaryhomes.com

Property Owner Information (If applicant is not the property owner, the application **must** include the property owner's information and written consent for the applicant to pursue the permit)

Name:_____
Mailing address:_____
Telephone:_____ Email:_____

Utilities (circle, if applicable): Septic tank City sewer Water Well
Construction Type (circle): New home Accessory building Deck Addition Other
Do the plans include an Accessory Apartment Unit (circle)**:** Yes No
Is this an Accessory Dwelling Unit (circle)**:** Yes No

Project Information

Address: Bldg. 11 532-548 N 100 E, Units 84-88

Subdivision: Vineyard Parcel Tax ID: 02-301-0084-88

Square footage for fire flow (includes all floors and all areas under the roof, including garages and covered porches):

7,236 Initial JW

Zone_____ Height 32' Initial JW

Setbacks (front yard) _____ (side yard) _____ (rear yard) _____ Initial JW

Contractor Information

Name: VHD LLC

Mailing address: 50 E 2500 N Ste 101 North Logan, UT 84341

Telephone: 435-752-1480 Email: jessica@visionaryhomes.com

Stormwater Notice of Intent (NOI) Information

NOI No. UTR UTR397985 Permit issued to: VHD LLC

To obtain your NOI permit, please visit: cdx.epa.gov. You will create a log in and then access the Storm Water Permit Issuance System. There is a $150 NOI fee, paid directly to the state when you file your permit. For SWPPP templates, visit construction.stormwater.utah.gov.

Property owner and contractor shall have responsibility to determine grades, and final placement and elevations of footings/foundations. Property owner and contractor shall be responsible for compliance with all state, national and local building codes and ordinances.

Initial JW **Name** Jessica Williamson/VHD LLC

Approval by the city of any application submittal or paperwork does not alleviate the owners from their responsibility to understand and conform to local, state and federal laws. Providence City's approval is not intended to and cannot be construed to allow any laws to be violated.

Initial JW

By signing this document, you agree that Providence City will bill you for any and all professional firm fees as they arise throughout the approval process. This is in addition to application fees. All subdivisions require engineering review throughout the approval process, such as but not limited to reviews of development agreements, construction drawings, preliminary and final plats, and inspections. These services are billed by our city engineer at an hourly rate. Some subdivision applications may also require legal review. Other applications, such as but not limited to conditional uses, may also require engineering and/or legal review at the City's discretion. You agree to reimburse the City for all such costs, whether or not you were forewarned about such costs, and that the City cannot predict all situations in which professional services may be required in order to process your application. Initial JW

All Applicants Must Read the Following Before Signing This Application

The granting of a zoning permit does not override any federal, state, or local building code or authorize any individual to violate any local law or ordinance. Approval of this permit does not constitute a representation by the City that it will be liable for any issues arising from the construction of homes and other structures in a Sensitive or Hazard Area. It is the responsibility of the property owner to comply with all relevant local, state, and federal laws and regulations, including but not limited to Providence City Code 10-5 outlined below:

Sensitive and Hazard Areas:

1. JURISDICTIONAL WETLANDS: As Defined by the US Army Corps of Engineers
2. STEEP SLOPES: Where the rise or fall of the land is equal to or exceeds 30% over a horizontal distance of 50 feet or greater measured perpendicular to the contour lines.
3. NATURAL WATERWAYS OR OPEN WATER: Including but not limited to: rivers, creeks, or streams. Identified as those areas where surface waters flow sufficiently to produce a defined channel or bed.
4. FLOODPLAINS: See definitions in Chapter 16 Section 3 of this Title.
5. CRUCIAL WILDLIFE HABITAT AREAS: As identified by the State Division of Wildlife Resources (DWR)

6. GEOLOGICAL HAZARD AREAS: Earthquake fault lines or areas prone to debris flows, landslides, high or extreme liquefaction potential, and rock falls as identified by the US Geological Survey (USGS)
7. WILDFIRE HAZARD AREAS: Areas of the City designated as having moderate to extreme potential for wildfire hazards as identified by the City.
8. HAZARD WATER TABLE AREA: An area where potential ground water levels may occur within 12 feet of the natural grade.

By submitting this application, I affirm that I have read and understand the Title 10 Chapter 5 requirements for construction on property in the Sensitive or Hazard Area. I understand that the City is not liable for any issues which may arise because of the construction of structures in the Sensitive or Hazard Areas of the City. The property owner and their agents assume all liability for placing structures in this area of the City. I hereby certify that I am the property owner or authorized agent and I have read and examined this application and understand that the City has no liability. I accept responsibility for all soils and hazardous conditions on the site.

I declare under penalty of perjury that I am making this application of my own free will and choice and that the statements, answers, and documents submitted in connection with this application are true and correct to the best of my knowledge.

Jessica Williamson	Jessica Williamson/VHD LLC	6/10/21
Signature of Applicant	Printed Name	Date

PROVIDENCE CITY BUILDING DIVISION CONSTRUCTION POLICIES

(Required for all zoning permit applications)

1. **Zoning requirements**
   a. Site plan required to be on site at footing inspection
   b. Property corners to be marked and staked for inspection
2. **Lot ID**
   a. Posting of a lot ID sign is required during construction for inspections and emergency services. This sign is provided by the City and shall be posted by the first scheduled inspection and visible from the street.
3. **Toilets**
   a. The IPC and OSHA require a toilet on site during construction and in place prior to the first inspection. This has to be accessible to all workers in the area and requires the cooperation of all.
4. **Water Meter**
   a. Unauthorized use of City water will result in a fine and a stop work order on the property.
   b. Meter and sewer clean outs are not allowed to be encased or surrounded in concrete. (Contact the Public Works for the required specs.) The moving cost will be the responsibility of the owner.
5. **Streets/Sidewalks**
   a. No material will be allowed on public streets or sidewalks. "Material" is defined as construction products, or any size or dimension of aggregate. (See Providence City's specs.)
   b. Dirt piled over curb and sidewalk requires a minimum 4" pipe installed to allow drainage to the gutter. This temporary (180 days) blockage to the sidewalk requires safety tape or cones to divert traffic.
   c. All sidewalks, curbs, gutters, and streets associated with the property are to be kept clean during construction with a final cleaning required prior to final occupancy.
   d. Construction sites should be kept clean and all debris contained to that site.
6. **Elevations**
   a. I accept responsibility for all the soils and hazard conditions of the site. Approval of this permit does not constitute a representation by the City that the building at any specified elevation will solve any ground water, slope or hazard condition. The solution to this problem is the sole responsibility of the permit applicant, agent, or property owner.
7. **Final Occupancy**
   a. Occupying the building prior to final occupancy will result in revocation of the $500 power bond. After the initial inspection, the Building Official will determine whether any furniture can be moved into the house or garage.
8. **Temporary Occupancy**
   a. Will only be issued with special permission. Temporary permits will expire after 30 days of issue and the construction bond will be forfeited if work is not completed
9. **Permits**
   a. Plan review and permit fees are good for 180 days. Only the permit portion will be refunded, after a written letter of request is received. No fees will be refunded after this period has expired.

By signing below, I state that I have read and agree to the above terms and understand that I am the responsible party for the information contained on this sheet.

Jessica Williamson	Jessica Williamson/VHD LLC		6/10/21
Signature	Printed Name	On Behalf Of	Date

APPLICATION FOR CONNECTION TO THE PROVIDENCE CITY WATER SYSTEM

(Required only for applications for new home/commercial construction)

I hereby apply to Providence City for permission to connect my residence at 550-570 N 245 W to the Providence City water system and receive water services thereby provided. I agree to the following:

1. Providence City will install a water meter for the premises when the service line and meter set is in and has been accepted by the City.
   a. This acceptance is also contingent upon any changes or alteration to grade of landscape made by the homeowner/builder around the meter set. These changes must also meet Providence City specifications.
2. If a homeowner/builder is required to make a connection to the Providence City water system, all costs of this connection, service line, meter set and permits shall be paid by the homeowner/builder.
   a. Applicant shall purchase an excavation permit.
   b. Applicant shall post an $800 bond with the City, $750 refundable upon satisfactory acceptance by the City.
   c. Installation shall follow all guidelines of Providence City standard specifications (a copy is available for purchase at the City Office).
   d. All work shall be inspected by the City. If not approved, the applicant will have the problems rectified at his expense to meet Providence City requirements.
   e. Any connection and service line made from the City's main line up to and including the meter shall remain the property of the City, and Providence City shall have access thereto at all times.
      1. Cost for installation and maintenance of service lines, including homeowner connection to the meter setter is the sole responsibility of the homeowner/builder.
3. The applicant understands that the billing for water service begins once the meter is set. The time frame for setting of the water meter needs to be scheduled with Providence City Water Dept.
   a. Providence City shall have 30 days in which to install the requested water meter after payment of all fees and satisfactory inspections have been completed. Providence City Water Dept. reserves the right to evaluate the feasibility of a water service or water meter being installed between November 1 and April 1.
4. No water meter set shall be installed in a sidewalk, driveway or encased in concrete. Providence City shall have a minimum of an 18 inch unobstructed radius from the center of the lid and free access to the lines and meters installed under this agreement at reasonable times, through applicant's property if necessary.
5. Sprinkler systems or other possible contamination sources on the homeowner's property that connect to the City water system shall have approved backflow assemblies installed and registered with the City.
6. Applicant hereby agrees to abide by all rules, regulations, resolutions or ordinances enacted or adopted by the governing body applicable to the Providence City Water System.

Jessica Williamson	Jessica Williamson/VHD LLC		6/10/21
Signature	Printed Name	On Behalf Of	Date

APPLICATION FOR CONNECTION TO THE PROVIDENCE CITY SEWER SYSTEM
(Required only for applications for new home/commercial construction)

I hereby apply to Providence City for permission to connect my premises at 550-570 N 245 W to the Providence City sewer system. I agree to the following:

1. Providence City will allow the applicant to connect to the sewer trunk line or the service line extension, if one exists.
2. Applicant will obtain an excavation permit and comply with it if connection to the trunk line is required.
   a. Applicant shall purchase an excavation permit.
   b. Applicant shall post an $800 bond with the City, $750 refundable upon satisfactory acceptance by the City.
   c. Installation shall follow all guidelines of Providence City standard specifications (a copy is available for purchase at the City Office).
   d. All work shall be inspected by the City. If not approved, the applicant will have the problems rectified at his expense to meet Providence City requirements.
   e. Applicant will bear all the costs associated with the permits, excavation, pipe, installation, backfill, compaction, and repair of curbs, sidewalks and streets.
   f. Applicant shall use the mechanical connection apparatus approved by the Public Works Director.
   g. All materials used that are placed on City property shall become the property of Providence City.
   h. Applicant shall call for a City inspector 48 hours prior to any work beginning on a City right-of-way. All work shall be inspected prior to backfill.
3. Before making connection with the sewer system, applicant shall cause the plumbing upon the premises to be inspected by the municipality, and if it is not approved, it shall be rectified at the applicant's expense.
4. The Providence City Water Department reserves the right to evaluate the feasibility of installing a sewer connection between November 1 and April 1.
5. Providence City shall maintain all sewer trunk lines in the City, but it shall be the responsibility of the home owner to maintain the line on the premises and to the junction with the sewer trunk line, commonly known as the "Y".
6. Applicant agrees to abide by all rules, regulations, resolutions or ordinances enacted or adopted by the governing body applicable to the Providence City Sewer System.

Jessica Williamson	Jessica Williamson/VHD LLC		6/10/21
Signature	Printed Name	On Behalf Of	Date

VINEYARD PHASE 3

FINAL PLAT

PART OF THE SOUTHWEST QUARTER OF SECTION 2
AND SOUTHEAST QUARTER OF SECTION 3
TOWNSHIP 11 NORTH, RANGE 1 EAST
SALT LAKE BASELINE AND MERIDIAN
PROVIDENCE, UTAH

SCALE: 1"=40' (24x36 PLAN SET)

ADDRESS/LOT AREA TABLE		
LOT	ADDRESS	LOT AREA
84	532 NORTH 100 EAST	1120 s.f.
85	536 NORTH 100 EAST	1120 s.f.
86	540 NORTH 100 EAST	1120 s.f.
87	544 NORTH 100 EAST	1120 s.f.
88	548 NORTH 100 EAST	1120 s.f.
89	554 NORTH 100 EAST	987 s.f.
90	558 NORTH 100 EAST	987 s.f.
91	562 NORTH 100 EAST	987 s.f.
92	564 NORTH 100 EAST	987 s.f.
93	547 NORTH 100 EAST	987 s.f.
94	543 NORTH 100 EAST	987 s.f.
95	539 NORTH 100 EAST	987 s.f.
96	535 NORTH 100 EAST	987 s.f.
97	531 NORTH 100 EAST	987 s.f.
98	527 NORTH 100 EAST	987 s.f.
CONDOMINIUMS		
B	139 EAST 550 NORTH	
C	115 EAST 550 NORTH	
D	536 NORTH 130 EAST	
E	537 NORTH 130 EAST	

LEGEND

- PRIVATE
- PRIVATE COMMON AREA (EXCEPT SPRING CREEK PARKWAY AND 170 EAST STREET WHICH ARE DEDICATED PUBLIC RIGHT OF WAYS) (SEE NOTE 7)
- LIMITED COMMON AREA RESERVED FOR UNIT(S) (SEE NOTE 6)
- EASEMENT AS NOTED

CURVE TABLE					
CURVE	LENGTH	RADIUS	DELTA ANGLE	CHORD BEARING	CHORD LENGTH
C56	34.63	767.50	2°35'07"	S87°48'15"E	34.63
C58	162.93	533.00	17°30'51"	S79°03'13"W	162.29
C59	26.37	500.00	3°01'19"	S88°08'47"E	26.37
C60	107.60	500.00	12°19'47"	S80°28'14"E	107.39
C61	80.64	712.50	6°29'04"	N77°32'52"W	80.59
C62	97.23	712.50	7°49'08"	N84°41'58"W	97.15
C63	97.01	1000.00	5°33'30"	S82°33'26"E	96.97
C64	0.89	1000.00	0°03'03"	S85°21'42"E	0.89
C65	19.63	1000.00	1°07'28"	S85°56'57"E	19.63
C66	33.84	750.00	2°35'07"	S87°48'15"E	33.84
C67	27.12	512.50	3°01'55"	S88°08'29"E	27.12
C68	57.87	512.50	6°28'11"	S83°23'26"E	57.84
C69	5.92	700.00	0°29'05"	N74°32'52"W	5.92
C70	52.33	512.50	5°51'00"	S77°13'50"E	52.30
C71	67.97	700.00	5°33'48"	N77°34'19"W	67.94
C72	67.97	700.00	5°33'48"	N83°08'06"W	67.94
C73	32.84	700.00	2°41'17"	N87°15'39"W	32.84

LINE TABLE		
LINE	LENGTH	BEARING
L40	48.19	S34°13'44"E
L41	26.96	N55°43'28"E
L42	28.91	S43°13'24"E
L43	56.36	S30°53'09"E
L44	35.78	N35°09'19"E
L45	41.16	S48°04'03"W

RECEIVED
JUN 14 2021
By

SURVEYOR'S CERTIFICATE

I, Brian G. Lyon, a Registered Land Surveyor, hold Certificate No. 275617, as prescribed by the laws of the State of Utah, and do hereby certify that by authority of the owners, I have made a survey of the tract of land shown on this plat, which is accurately described therewith, and have subdivided said tract of land into lots and streets to be hereafter known as VINEYARD, PHASE 3, and that the same has been surveyed and staked on the ground as shown on this plat.

Signed on this _____day of _____ 2020.

PROFESSIONAL LAND SURVEYOR 275617 BRIAN G. LYON STATE OF UTAH
12-2-20

NOTES

1. The developer shall meet Providence City Code Title 8 Chapter 1, Section 21.
   Indoor use: 67 Residences x 0.45 ac-ft = 30.15 ac-ft
   Outdoor use: 2.20 acres x 64% x 4 = 5.63 ac-ft
2. 5/8" rebar with cap will be set at all rear and interior property corners. Curb pins will be set at the intersection of the lot line with the curbing once it is placed.
3. All lots have an adequate buildable envelope with regards to hazardous slope, building, water and zoning setback.
4. The City will not issue any building permit for any lot until minimum improvements, as specified in Section 11-5-2 of the City code are complete.
5. There are no know Sensitive lands as defined in Providence Code 10-5-2.
6. All driveways, patios, decks and balconies as shown on each unit contained within the project are considered limited common areas. They are set aside and reserved for the use of the respective unit to which they are attached and/or appurtenant.
7. All other areas contained within the project, but not shown with diagonal stripes or shading or public streets are considered common area, including parking, private streets, storm water detention and drainage easement area.
8. All common areas and limited common areas are considered to be an easement for all public utilities, irrigation and drainage purposes. This includes the ingress/egress area.
9. All expenses involving the necessary improvements or extensions for a culinary water system, sanitary sewer system, gas service, electrical service, telephone service, cable television service, grading and landscaping, storm drainage systems, curb and gutters, fire hydrants, pavement, sidewalks, signage, street lighting and other improvements shall be paid for by the subdivider.
10. With Exception of those areas under private ownership, the property is subject to a blanket easement over, across, above, and under it for ingress, egress, installation, maintenance, repair, and replacement of utilities exclusively servicing the property. Utilities include, without limitation, water, sewer, gas, telephone, and electricity with exception of those areas under private ownership.
11. There is a 10 foot Public Utility Easement (P.U.E.) along all single family lot frontages.

LEGAL DESCRIPTION

Part of the Southwest Quarter of Section 2 and Southeast Quarter of Section 3, Township 11 North, Range 1 East of the Salt Lake Meridian described as follows:

Commencing at the Northeast Corner of Section 2, Township 11 North, Range 1 East of the Salt Lake Meridian monumented with a Cache County Brass Cap, thence S89°42'27"W 5433.19 feet to the Northwest Corner of Section 2; thence S00°04'53"W 2997.19 feet to a point on the south right of way line of 600 South Street; thence S01°10'17"W 844.40 feet along the east line of South Fields Subdivision to the POINT OF BEGINNING and running

thence S 06°55'23" E 33.86 feet; thence S 03°19'36" W 19.12 feet;
thence S 86°02'03" E 33.78 feet to the boundary of Vineyard, Phase 1;
thence along the boundary of Vineyard, Phase 1 the next nine courses:
1) thence S 01°59'43" W 139.68 feet; 2) thence N 89°05'49" W 7.36 feet;
3) thence Westerly, 34.63 feet along a curve to the right having a radius of 767.50 feet, a central angle of 02°35'07" and a chord that bears N 87°48'15" W 34.63 feet;
4) thence N 86°30'42" W 10.74 feet; 5) thence S 00°18'12" E 186.00 feet;
6) thence S 89°39'26" E 17.30 feet; 7) thence S 00°20'34" W 30.00 feet to the south right of way line of 520 North Street;
8) thence S 00°30'34" W 87.52 feet;
9) thence Westerly, a distance of 162.93 feet along a non tangent curve to the left of which the radius point lies S 02°11'21" E, with a radius of 533.00 feet, having a central angle of 17°30'51" and a chord that bears S 79°03'13" W 162.29 feet;
thence N 89°28'28" W 102.70 feet; thence N 83°53'11" W 140.98 feet;
thence N 01°10'17" E 517.35 feet; thence S 89°05'49" E 394.98 feet to the point of beginning, containing 4.789 acres, more or less.

OWNERS DEDICATION

Know all by these presents that we the undersigned owners of the above-described tract of land, having caused the same to be subdivided into single family dwelling lots, townhome lots, streets and common areas to be hereafter know as VINEYARD, PHASE 3, do hereby dedicate for the perpetual use of the owners of _____ all areas shown as private streets and common areas on this plat , subject to declarations of covenants, conditions and restrictions for the project which will be recorded in the Office of the County Recorder of Cache County, Utah, concurrently with the recording of this plat. The undersigned further consents to the recordation of this plat in accordance with Utah State Law. We also dedicate easements as shown hereon to the public for the installation and maintenance of utilities. Also hereby convey to any and all public utility companies a perpetual non-exclusive easement over the public utility easements shown on this plat, the same to be used for the installation maintenance, and operation of utility lines and facilities. Furthermore, we incorporate all notes and restrictions as listed hereon.
A) Public utilities, and drainage easements: Grant and dedicate a perpetual right and easement over, upon and under the lands designated on the plat as public utility, drainage easements, the same to be used for the installation, maintenance and operation of public utility service lines, storm drainage facilities whichever is applicable as may be authorized by Providence City, Utah with no buildings or structures being erected within such easements.
In witness whereof the undersigned have hereunto set their signatures this _____ day of _____ 20____.

_____
Ridgeview Park, LLC
Jeff Jackson, Managing Member

LIMITED LIABILITY COMPANY ACKNOWLEDGEMENT

STATE OF UTAH
COUNTY OF _____ } ss

On this ____ day of _____, in the year 2020, before me _____, a notary public, personally appeared Jeff Jackson, Manager Member of Ridgeview Park, LLC, proved on the basis of satisfactory evidence to be the person whose name is subscribed to this document, and acknowledged that said document was signed by him in behalf of said Ridgeview Park, LLC by authority of its bylaws.
Notary Public Signature_____
Notary Public Full Name_____
Commission Number_____
My Commission Expires_____
A Notary Public Commissioned in Utah

LAND USE AUTHORITY APPROVAL

APPROVED THIS _____DAY OF _____, 2020 BY THE PROVIDENCE LAND USE AUTHORITY

_____

MAYOR APPROVAL

APPROVED THIS _____DAY OF _____, 2020 BY THE PROVIDENCE CITY MAYOR

_____
PROVIDENCE CITY MAYOR

CITY ENGINEER APPROVAL

APPROVED THIS _____DAY OF _____, 2020 BY THE PROVIDENCE CITY ENGINEER

_____
PROVIDENCE CITY ENGINEER

UTILITIES APPROVAL

Each of the utility companies below state that they have reviewed the plat, that they approve the plat as it relates to their particular company, that they are in agreement with placing all of their utilities underground within the right-of-way as shown on the plans and are willing to provide the needed service for the development.

_____
CITY'S CULINARY WATER AND SANITARY SEWER REPRESENTATIVE

_____
ROCKY MNTN POWER REPRESENATIVE

_____
DOMINION ENERGY REPRESENTATIVE

_____
COMCAST CABLE REPRESENTATIVE

_____
CENTURY LINK REPRESENATIVE

Groundwater Note:
A geotechnical study was performed on this parcel by A Cache Corp. prior to the development of this subdivision. In that report, areas of potential high ground water were encountered. The full geotechnical report is available in the Providence City Public Works office. The report suggested installing a land drain to mitigate the high water in order to make installing basements feasible in this development. A land drain will be installed with the utility improvements prior to any home construction as suggested in the report, and as required by Providence City. Individual footing drains are to be installed with each home, and connected to the land drain.

SETBACKS

Setbacks (Single Family Detached, Duplex)
Front Yard (street garage access): 20 feet min./35 feet max.
Front Yard (alley garage access): 10 feet min.
Rear Yard: 10 feet min.
Side Yard: 7.5 feet min. on side adjacent to street
Corner Lot: 15 feet min. on side adjacent to street

Setbacks (Single Family Attached, Apartment)
No front or rear building setback is in place for single family attached and apartment housing, provided that the development's open space is integrated throughout the project so that each group of single family attached dwelling units and each building of apartments has a minimum of 10' of landscaping open space on all sides, and said landscaping being calculated from the front/rear plane of the dwelling unit or exterior wall of the apartment building, with the exception of one side of single-family attached which may be needed for alley garage access. Buildings whose front plan faces the front plane of another building shall have a minimum of 20' separation between the building's front planes.

COUNTY RECORDER'S NO.

State of Utah, County of Cache, recorded and filed at the request of _____
Date _____ Time _____ Fee _____
Entry _____
Index _____
Filed in: File of plats
County Recorder

PLANNING COMMISSION APPROVAL

APPROVED BY THE CITY OF PROVIDENCE PLANNING COMMISSION COMMISSION THIS _____DAY OF _____, 2020, A.D.

_____

CITY ATTORNEY APPROVAL

APPROVED THIS _____ DAY OF _____, 2020 BY THE PROVIDENCE CITY ATTORNEY

_____
PROVIDENCE CITY ATTORNEY

ALLIANCE CONSULTING ENGINEERS
150 EAST 200 NORTH SUITE P
LOGAN, UTAH 84321
(435)755-5121
allianceloganl@yahoo.com

OWNER:
RIDGEVIEW PARK, LLC
50 EAST 2500 N SUITE 101
NORTH LOGAN, UTAH 84341
(435)752-1480

No.	REVISIONS/ SUBMISSIONS	DATE

REVIEWED : DRAWN :
CAD FILE : PROJECT NO. :

PROJECT TITLE: VINEYARD, PHASE 3
PART OF THE SOUTHWEST QUARTER OF SECTION 2 AND SOUTHEAST QUARTER OF SECTION 3
TOWNSHIP 11 NORTH, RANGE 1 EAST
SALT LAKE BASELINE AND MERIDIAN
PROVIDENCE, UTAH

DRAWING TITLE: FINAL PLAT

DATE : DEC.2020
DRAWING No. 1
1 of 3

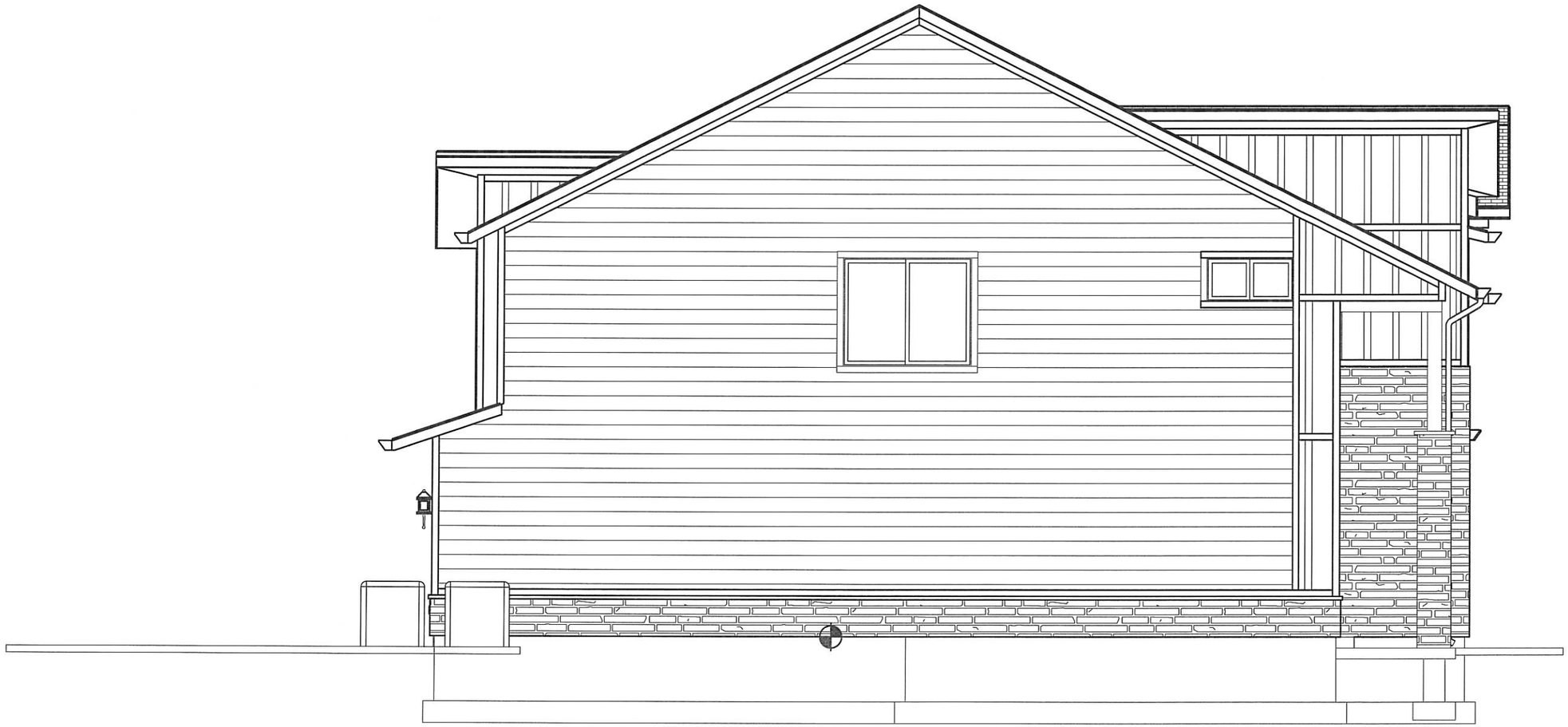

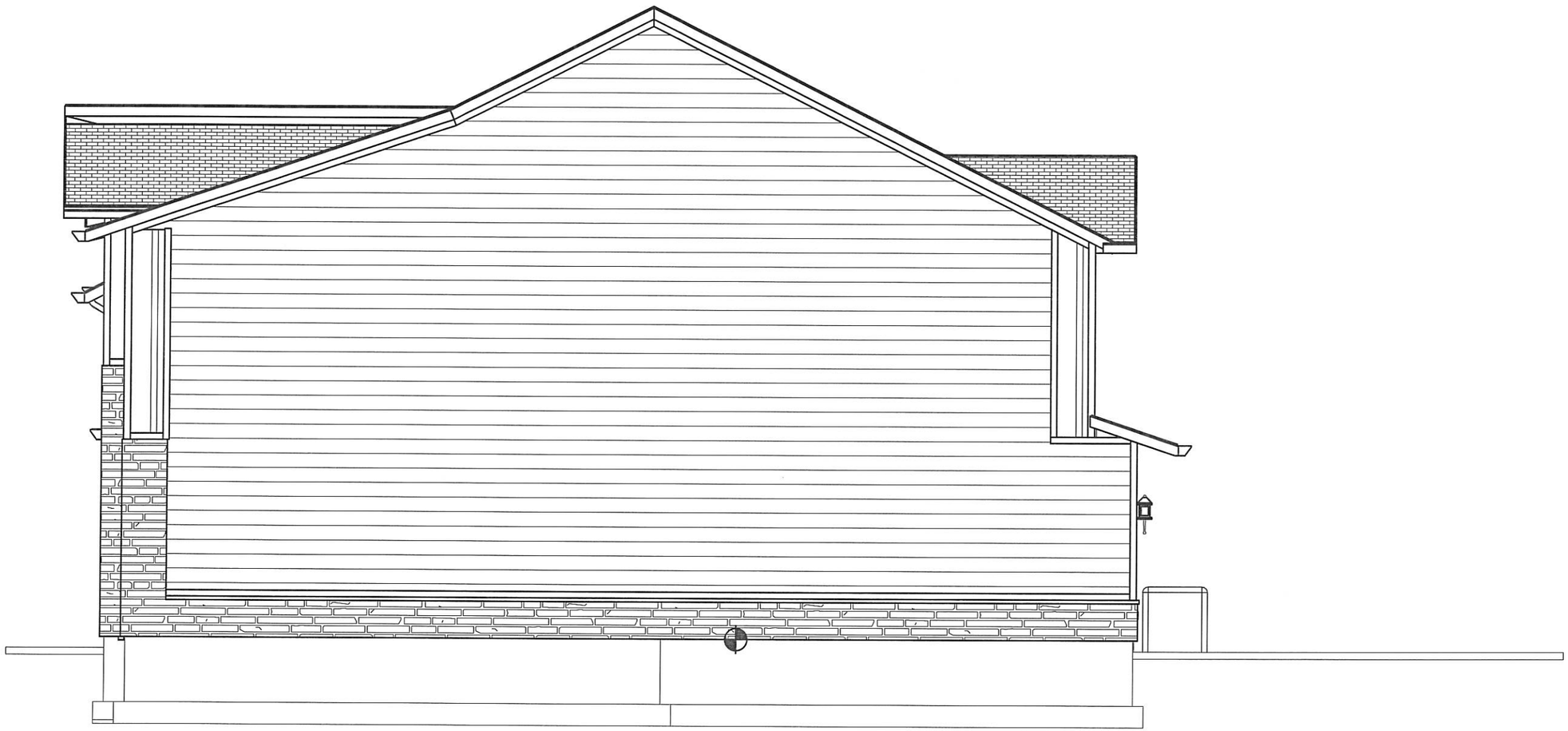

SW7019

GAUNTLET GRAY

SW7005

PURE WHITE

SW6168

MODERNE WHITE

Slate Leuders

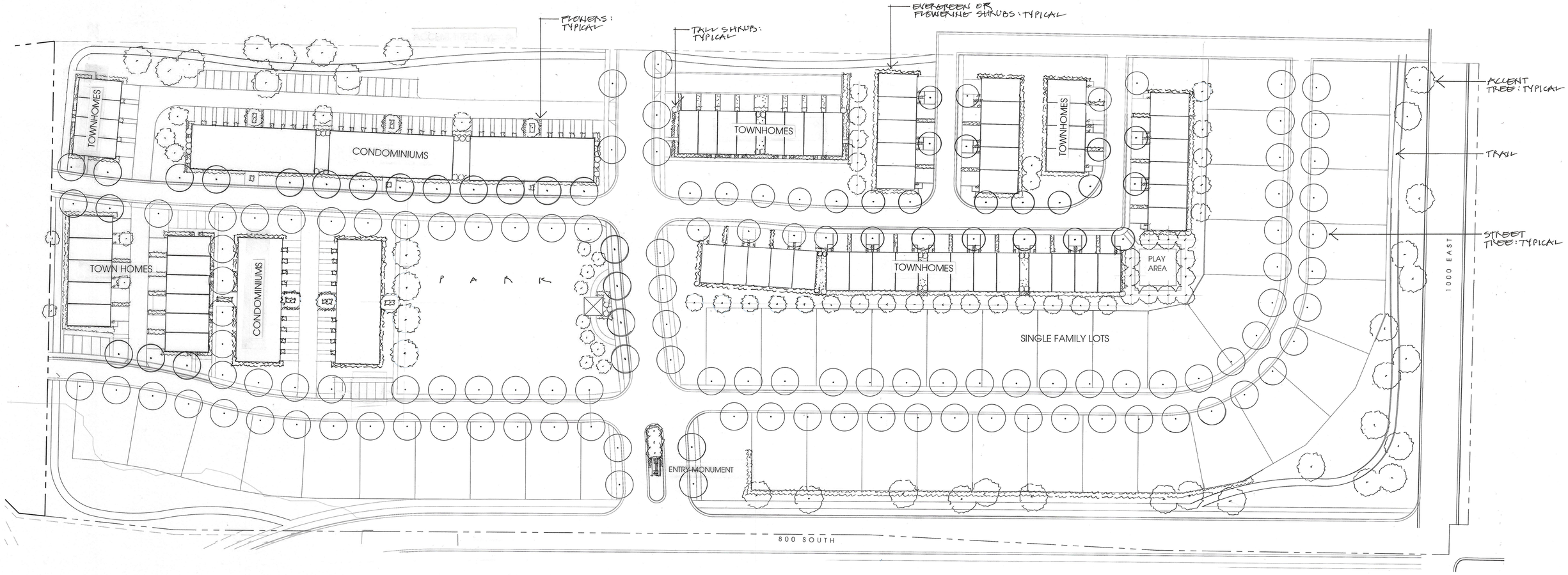

Site Tabulation . Vineyard . Providence, Utah . Ironwood Construction

		Area	Percentage
Site:		17.00 Acres	
ROW dedication		0.06 Acres	
Net Site		16.94 Acres	100%
Lots	202,575 Sq. Ft.	4.65 Acres	
Buildings	94,656 Sq. Ft.	2.17 Acres	12.8%
Condominium	32,400 Sq. Ft.	0.74 Acres	
Town homes	62,256 Sq. Ft.	1.43 Acres	
Pavements	179,590 Sq. Ft.	4.12 Acres	24.3%
Streets & Alleys	146,904 Sq. Ft.	3.37 Acres	
Parking	5,784 Sq. Ft.	0.13 Acres	
Driveways	26,902 Sq. Ft.	0.62 Acres	
Landscape	252,630 Sq. Ft.	5.80 Acres	34.2%
Park	43,500 Sq. Ft.	1.00 Acres	

Preliminary Plant List . Vineyard . Providence, Utah . Ironwood Construction

This is a preliminary list of plant materials for use on the final planting plan for this project. These plants are representative, but the list may not be exhaustive of all plants that ultimately may be used, nor may all these materials appear on the final planting plan.

Street Trees: Quercus rubra / Red Oak Acer x a.p. 'Warrensred' / Pacific Sunset Maple Fraxinus p.l. 'Patmore' / Patmore Ash Acer p. 'Deborah' / Deborah Maple	2" caliper
Accent Trees: Malus 'Spring Snow / Spring Snow Crabapple Gleditsia t.i. 'Shademaster' Thornless Honeylocust Syringa reticulata 'Ivory Silk' / Tree Lilac	1 ½" caliper
Tall Shrubs: Virburnum burkwoodi / Burkwood Viburnum Ribes alpinum / Alpine Currant Spiraea vanhoutei / Bridal Wreath Cornus stolonifera / Red Osier Dogwood	5 gallon
Evergreen Shrubs: Taxus baccata repandens / English Spreading Yew	5 gallon
Mahonia repens / Creeping Oregon Grape	1 gallon
Flowering Shrubs: Spiraea b. 'Anthony Waterer' / Dwarf Red Spiraea	5 gallon
Hydrangea a. 'White Dome' / Hydrangea	
Flowers: Rosa knockout / Knockout Roses Veronica 'Royal Candles' / Speedwell Iberis sempervirens / Evergreen Candytuft Heuchera spp. / Coral Bells Rudbeckia hirta / Black-eyed Susan Coreopsis v. 'Zagreb' / Coreopsis Anemone sylvestris 'Snowdrop' / Windflower Salvia s.n. 'May Night' / Salvia	1 gallon
Lawn	

North 1" = 50 Feet

50 25 0 50 100

15 MARCH 2019

Preliminary Planting Plan

VINEYARD

Providence, Utah

Ironwood Construction . 50 East 2500 North . North Logan, Utah

R. MICHAEL KELLY
CONSULTANTS
LAND PLANNING • LANDSCAPE ARCHITECTURE
P.O. Box 469, Millville, UT 84326 435.753.2955

High Water Table Mitigating Strategies:

Land drain

Townhomes will be slab on grade, no basements.

PROVIDENCE CITY Land Use Authority – Staff Report Meeting Date: June 16, 2021		
Request: Applicant is requesting approval of a conditional use and zoning approval for a condominium building located at 115 E 550 N, Providence UT.		
Item Type: Conditional Use	**Applicant:** Visionary Homes	**Property Address:** 115 E 550 N, Providence UT (Bldg. C)
Parcel ID #: 02-301-COMM	**General Plan**: LCR	**Zone**: LCR
Background Information: Complete Application was received June 11, 2021; application contained: 1. Providence City Conditional Use application. 2. Payment of $100 application fee. Rob Stapley, Providence City Public Works Director, inspected the current infrastructure on June 14, 2021.		

FINDINGS OF FACT:

1. UCA 10-9a-507. Conditional Uses allow a municipality to adopt a land use ordinance that includes conditional uses and provisions for conditional uses that require compliance with standards set for in an applicable ordinance.
2. Providence City Code (PCC) 10-5 Sensitive Areas, Section 1 Conditional use permit required states, all requests for permits involving a lot, parcel or site located wholly or partially within an area subject to the Hazard Flood (HF), Hazard Slope (HS), Hazard Water Table (HW) or Hazard Earthquake Primary Fault (HE), Hazard Wildfire (WF) regulations, shall be dealt with as a request for a conditional use permit under the provisions of Section 10-3-5 of this Title. All applications shall comply with the following regulations before any permit shall be issued.
3. PCC 10-3-5 Conditional Use Permits allows the City to impose reasonable conditions: to mitigate the reasonably anticipated detrimental effects of the proposed use on the health, safety, or general welfare of persons residing, working, or conducting business in the vicinity; to mitigate injury to property in the vicinity; to mitigate any risk to safety of persons or property because of vehicular traffic or parking, large gatherings of people, or other causes.

CONCLUSIONS OF LAW:

1. Providence City has adopted land use ordinances that include conditional uses and provisions for conditional uses.
2. This parcel is in a Hazard Water Table area.
3. Providence City has the authority to impose reasonable conditions to mitigate the reasonably anticipated detrimental effects of the proposed use.
4. The request meets the requirements of the Codes listed in the Findings of Fact with the following conditions:

CONDITIONS:

1. The applicant will continue to meet all relevant federal, state, county, and Providence City rules, laws, codes, ordinances.
2. The applicant will mitigate Hazard Water Table by: See High Water Table Mitigating Strategies.

DRAFT

3. This conditional use is for the condominium building only as shown on the site plan date stamped June 10, 2021.
4. Payment of fees listed on the Providence City Zoning Permit.
5. Approval by the City of any submitted application or paperwork does not alleviate the owners and/or their agents from their responsibility to understand and conform to local, state, and federal laws. Providence City's approval is not intended to and cannot be construed to allow any laws to be violated.

DRAFT

FOR OFFICE USE ONLY
Date _____
Payment Form _____
Amount_____
Receipt #_____
Clerk
_____

PROVIDENCE CITY
APPLICATION FOR A CONDITIONAL USE

Please Note: City Staff will NOT accept the application and fee payment if they are incomplete. Incomplete applications will NOT be processed or scheduled for review by the City.

Initial JW **Name** Jessica Williamson

Date 6/9/21

SUBMITTAL REQUIREMENTS **Staff Check**

- $100 application fee _____
- An 11"x17" of the property showing the location, function and characteristics of the use, including parking and percentage of space being used _____
- Cache County plat map of the property
- Copy of Cache County GIS Parcel Summary _____
  http://66.232.67.238/Websites/Parcel%20and%20Zoning%20Viewer/
- Mitigation Strategies for applicable sensitive areas _____
- Mailing addresses for the owners of adjacent properties _____
- Property owner consent for pursuit of conditional use (if owner is different than Applicant) _____
- Electronic copy of structure elevations & square footage including attached garage(s), covered porches, covered decks etc. _____
- Electronic copy of **ALL** submittals (email or flash drive is acceptable) _____

Applicant Information (all information MUST be provided)

Name VHD LLC
Address 50 E 2500 N Ste. 101 North Logan, UT 84341
Phone 435-752-1480 Email jessica@visionaryhomes.com

Party Responsible for Payment (if different than applicant)- the individual/firm to whom any and all professional services invoices (attorney/engineer/etc.) will be sent and who will be responsible for payment of such invoices.

Name_____
Address_____
Phone_____ Email_____

Property Information

Owner of record VHD LLC
Owner address 50 E 2500 N Ste. 101 North Logan, UT 84341
Owner phone 435-752-1480 Owner email jessica@visionaryhomes.com
Parcel address Condo Bldg. C, 115 E 550 N Parcel Tax I.D._____
Zone_____ Height 42' Initial JW
Setbacks (front yard) _____ (side yard) _____ (rear yard) _____ Initial JW

Written Statement of Request (attach additional sheets if necessary)

- Briefly explain why you are seeking a conditional use and what the intended use of the property will be if the conditional use is granted.

We are seeking a conditional use permit to begin construction on a 10 unit condo building.

164 N. Gateway Dr * Providence UT 84332
435-752-9441 * Fax: 435-753-1586 * email: sbankhead@providence.utah.gov

Property owner and contractor shall have responsibility to determine grades, and final placement and elevations of footings/foundations. Property owner and contractor shall be responsible for compliance with all state, national and local building codes and ordinances. Initial JW **Name** Jessica Williamson

Approval by the city of any application submittal or paperwork does not alleviate the owners from their responsibility to understand and conform to local, state and federal laws. Providence City's approval is not intended to and cannot be construed to allow any laws to be violated. Initial JW

By signing this document, you agree that Providence City will bill you for any and all professional firm fees as they arise throughout the approval process. This is in addition to application fees. All subdivisions require engineering review throughout the approval process, such as but not limited to reviews of development agreements, construction drawings, preliminary and final plats, and inspections. These services are billed by our city engineer at an hourly rate. Some subdivision applications may also require legal review. Other applications, such as but not limited to conditional uses, may also require engineering and/or legal review at the City's discretion. You agree to reimburse the City for all such costs, whether or not you were forewarned about such costs, and that the City cannot predict all situations in which professional services may be required in order to process your application. Initial JW

I declare under penalty of perjury that I am making this application of my own free will and choice and that the statements, answers, and documents submitted in connection with this application are true and correct to the best of my knowledge.

Jessica Williamson	Jessica Williamson/VHD LLC	6/9/21
Signature of Applicant	Printed Name	Date

The following is a general summary of which body reviews each land use application in Providence City. Public hearings may be required by the Planning Commission and City Council, as shown below. This matrix does not include zoning clearance/permits for new single-home construction or for business licenses, both of which are reviewed and approved by city staff.

Application	Executive Staff	Land Use Authority	Planning Commission	Public Hearing	City Council	Public Hearing	Appeal Authority	Filing Fee[1]
Code Amendment	✓	----	✓	✓[2]	✓	----	----	$100
Annexation	✓	----		----	✓	✓	----	$150
Rezone	✓	----	✓	✓	✓	----	----	**$100**
Conditional Use	✓	✓		----	----	----	----	**$100**
Subdivision Concept Plan	✓	----	----	----	----	----	----	$300
Preliminary Subdivision Plat	✓	----	✓	----	----	----	----	$400
Final/Amended Subdivision Plat[3]	✓	----	✓	----	✓[4]	----	----	$600
Site Plan	✓	✓	----	----	----	----	----	$50
Lot Consolidation[5]	✓	----	✓	----	----	----	----	$50
Exception to Title[6]	✓	----	✓	----	✓	----	----	$100
General Plan Amendment	✓	----	✓	✓	✓	----	----	$100
Right-of-Way Vacation	✓	----	✓	----	✓	✓	----	$100
Variance/ Appeal	----	----	----	----	----	----	✓	$100

[1] Filing Fees do **not** include professional firm review fees. Those will be billed to the applicant separately.
[2] Public Hearing required at Planning Commission only when the proposed code amendment is related to land use.
[3] Construction drawings are reviewed/approved by the City Engineer and Public Works Director.
[4] The City Council does not review the final plat itself, but rather reviews and approves the development agreement associated with the final plat.
[5] Lot consolidations are only required to have City approval when they are in a platted/recorded subdivision.
[6] Developers may ask for an exception from the requirements of the Providence City Subdivision Code (Title 11) through this process. All other variance/exception requests shall be handled by the Appeal Authority.

164 N. Gateway Dr * Providence UT 84332
435-752-9441 * Fax: 435-753-1586 * email: sbankhead@providence.utah.gov

Residential Site Plan Application

FOR OFFICE USE ONLY
Date _____
Payment Form _____
Amount_____
Receipt #_____
Clerk _____

Date: 6/9/21

Required Submittals

Please Note: City Staff will NOT accept the application and fee payment if they are incomplete. Incomplete applications will NOT be processed or scheduled for review by the City. Application fees do not include professional firm fees, which will be billed separately. Engineered site plans may, at the City's discretion, be required. The City will contact the applicant if an engineered site plan is deemed necessary. Accessory buildings include sheds (over 200 sq ft) and all detached buildings (shop, garage, etc.)

Name Jessica Williamson/VHD LLC **Initial** JW

Construction Type	Application	Filing Fee $50- New Home $25- all other	11x17 Site Plan Must Include:			Cache County Plat Map	Stormwater NOI Permit	Stormwater Pollution Prevention Plan (SWPPP)
			Existing & proposed buildings, dimensions, & setbacks	Existing/ proposed utilities	Dimensions of driveway cut – (35' max)			
New Home								
Acc. Building							*	*
Addition							*	*
Deck							*	*
Other								

*May not apply in all cases

Applicant Information

Name: VHD LLC
Mailing address: 50 E 2500 N Ste 101 North Logan, UT 84341
Telephone: 435-752-1480 Email: jessica@visionaryhomes.com

Property Owner Information (If applicant is not the property owner, the application **must** include the property owner's information and written consent for the applicant to pursue the permit)

Name:_____
Mailing address:_____
Telephone:_____ Email:_____

Utilities (circle, if applicable): Septic tank City sewer Water Well
Construction Type (circle): New home Accessory building Deck Addition Other
Do the plans include an Accessory Apartment Unit (circle)**:** Yes No
Is this an Accessory Dwelling Unit (circle)**:** Yes No

Project Information

Address: Condo Bldg. C, 115 E 550 N

Subdivision: Vineyard ___ Parcel Tax ID: _____

Square footage for fire flow (includes all floors and all areas under the roof, including garages and covered porches):

16,252 Initial JW

Zone _____ Height 42' Initial JW

Setbacks (front yard) _____ (side yard) _____ (rear yard) _____ Initial JW

Contractor Information

Name: VHD LLC

Mailing address: 50 E 2500 N Ste 101 North Logan, UT 84341

Telephone: 435-752-1480 Email: jessica@visionaryhomes.com

Stormwater Notice of Intent (NOI) Information

NOI No. UTR UTR397985 Permit issued to: VHD LLC

To obtain your NOI permit, please visit: cdx.epa.gov. You will create a log in and then access the Storm Water Permit Issuance System. There is a $150 NOI fee, paid directly to the state when you file your permit. For SWPPP templates, visit construction.stormwater.utah.gov.

Property owner and contractor shall have responsibility to determine grades, and final placement and elevations of footings/foundations. Property owner and contractor shall be responsible for compliance with all state, national and local building codes and ordinances.

Initial JW **Name** Jessica Williamson/VHD LLC

Approval by the city of any application submittal or paperwork does not alleviate the owners from their responsibility to understand and conform to local, state and federal laws. Providence City's approval is not intended to and cannot be construed to allow any laws to be violated.

Initial JW

By signing this document, you agree that Providence City will bill you for any and all professional firm fees as they arise throughout the approval process. This is in addition to application fees. All subdivisions require engineering review throughout the approval process, such as but not limited to reviews of development agreements, construction drawings, preliminary and final plats, and inspections. These services are billed by our city engineer at an hourly rate. Some subdivision applications may also require legal review. Other applications, such as but not limited to conditional uses, may also require engineering and/or legal review at the City's discretion. You agree to reimburse the City for all such costs, whether or not you were forewarned about such costs, and that the City cannot predict all situations in which professional services may be required in order to process your application. Initial JW

All Applicants Must Read the Following Before Signing This Application

The granting of a zoning permit does not override any federal, state, or local building code or authorize any individual to violate any local law or ordinance. Approval of this permit does not constitute a representation by the City that it will be liable for any issues arising from the construction of homes and other structures in a Sensitive or Hazard Area. It is the responsibility of the property owner to comply with all relevant local, state, and federal laws and regulations, including but not limited to Providence City Code 10-5 outlined below:

Sensitive and Hazard Areas:

1. JURISDICTIONAL WETLANDS: As Defined by the US Army Corps of Engineers
2. STEEP SLOPES: Where the rise or fall of the land is equal to or exceeds 30% over a horizontal distance of 50 feet or greater measured perpendicular to the contour lines.
3. NATURAL WATERWAYS OR OPEN WATER: Including but not limited to: rivers, creeks, or streams. Identified as those areas where surface waters flow sufficiently to produce a defined channel or bed.
4. FLOODPLAINS: See definitions in Chapter 16 Section 3 of this Title.
5. CRUCIAL WILDLIFE HABITAT AREAS: As identified by the State Division of Wildlife Resources (DWR)

6. GEOLOGICAL HAZARD AREAS: Earthquake fault lines or areas prone to debris flows, landslides, high or extreme liquefaction potential, and rock falls as identified by the US Geological Survey (USGS)
7. WILDFIRE HAZARD AREAS: Areas of the City designated as having moderate to extreme potential for wildfire hazards as identified by the City.
8. HAZARD WATER TABLE AREA: An area where potential ground water levels may occur within 12 feet of the natural grade.

By submitting this application, I affirm that I have read and understand the Title 10 Chapter 5 requirements for construction on property in the Sensitive or Hazard Area. I understand that the City is not liable for any issues which may arise because of the construction of structures in the Sensitive or Hazard Areas of the City. The property owner and their agents assume all liability for placing structures in this area of the City. I hereby certify that I am the property owner or authorized agent and I have read and examined this application and understand that the City has no liability. I accept responsibility for all soils and hazardous conditions on the site.

I declare under penalty of perjury that I am making this application of my own free will and choice and that the statements, answers, and documents submitted in connection with this application are true and correct to the best of my knowledge.

Jessica Williamson	Jessica Williamson/VHD LLC	6/9/21
Signature of Applicant	Printed Name	Date

PROVIDENCE CITY BUILDING DIVISION CONSTRUCTION POLICIES

(Required for all zoning permit applications)

1. **Zoning requirements**
   a. Site plan required to be on site at footing inspection
   b. Property corners to be marked and staked for inspection
2. **Lot ID**
   a. Posting of a lot ID sign is required during construction for inspections and emergency services. This sign is provided by the City and shall be posted by the first scheduled inspection and visible from the street.
3. **Toilets**
   a. The IPC and OSHA require a toilet on site during construction and in place prior to the first inspection. This has to be accessible to all workers in the area and requires the cooperation of all.
4. **Water Meter**
   a. Unauthorized use of City water will result in a fine and a stop work order on the property.
   b. Meter and sewer clean outs are not allowed to be encased or surrounded in concrete. (Contact the Public Works for the required specs.) The moving cost will be the responsibility of the owner.
5. **Streets/Sidewalks**
   a. No material will be allowed on public streets or sidewalks. "Material" is defined as construction products, or any size or dimension of aggregate. (See Providence City's specs.)
   b. Dirt piled over curb and sidewalk requires a minimum 4" pipe installed to allow drainage to the gutter. This temporary (180 days) blockage to the sidewalk requires safety tape or cones to divert traffic.
   c. All sidewalks, curbs, gutters, and streets associated with the property are to be kept clean during construction with a final cleaning required prior to final occupancy.
   d. Construction sites should be kept clean and all debris contained to that site.
6. **Elevations**
   a. I accept responsibility for all the soils and hazard conditions of the site. Approval of this permit does not constitute a representation by the City that the building at any specified elevation will solve any ground water, slope or hazard condition. The solution to this problem is the sole responsibility of the permit applicant, agent, or property owner.
7. **Final Occupancy**
   a. Occupying the building prior to final occupancy will result in revocation of the $500 power bond. After the initial inspection, the Building Official will determine whether any furniture can be moved into the house or garage.
8. **Temporary Occupancy**
   a. Will only be issued with special permission. Temporary permits will expire after 30 days of issue and the construction bond will be forfeited if work is not completed
9. **Permits**
   a. Plan review and permit fees are good for 180 days. Only the permit portion will be refunded, after a written letter of request is received. No fees will be refunded after this period has expired.

By signing below, I state that I have read and agree to the above terms and understand that I am the responsible party for the information contained on this sheet.

Jessica Williamson	Jessica Williamson/VHD LLC		6/9/21
Signature	Printed Name	On Behalf Of	Date

APPLICATION FOR CONNECTION TO THE PROVIDENCE CITY WATER SYSTEM

(Required only for applications for new home/commercial construction)

I hereby apply to Providence City for permission to connect my residence at 115 E 550 N to the Providence City water system and receive water services thereby provided. I agree to the following:

1. Providence City will install a water meter for the premises when the service line and meter set is in and has been accepted by the City.
   a. This acceptance is also contingent upon any changes or alteration to grade of landscape made by the homeowner/builder around the meter set. These changes must also meet Providence City specifications.
2. If a homeowner/builder is required to make a connection to the Providence City water system, all costs of this connection, service line, meter set and permits shall be paid by the homeowner/builder.
   a. Applicant shall purchase an excavation permit.
   b. Applicant shall post an $800 bond with the City, $750 refundable upon satisfactory acceptance by the City.
   c. Installation shall follow all guidelines of Providence City standard specifications (a copy is available for purchase at the City Office).
   d. All work shall be inspected by the City. If not approved, the applicant will have the problems rectified at his expense to meet Providence City requirements.
   e. Any connection and service line made from the City's main line up to and including the meter shall remain the property of the City, and Providence City shall have access thereto at all times.
      1. Cost for installation and maintenance of service lines, including homeowner connection to the meter setter is the sole responsibility of the homeowner/builder.
3. The applicant understands that the billing for water service begins once the meter is set. The time frame for setting of the water meter needs to be scheduled with Providence City Water Dept.
   a. Providence City shall have 30 days in which to install the requested water meter after payment of all fees and satisfactory inspections have been completed. Providence City Water Dept. reserves the right to evaluate the feasibility of a water service or water meter being installed between November 1 and April 1.
4. No water meter set shall be installed in a sidewalk, driveway or encased in concrete. Providence City shall have a minimum of an 18 inch unobstructed radius from the center of the lid and free access to the lines and meters installed under this agreement at reasonable times, through applicant's property if necessary.
5. Sprinkler systems or other possible contamination sources on the homeowner's property that connect to the City water system shall have approved backflow assemblies installed and registered with the City.
6. Applicant hereby agrees to abide by all rules, regulations, resolutions or ordinances enacted or adopted by the governing body applicable to the Providence City Water System.

Jessica Williamson	Jessica Williamson/VHD LLC		6/9/21
Signature	Printed Name	On Behalf Of	Date

APPLICATION FOR CONNECTION TO THE PROVIDENCE CITY SEWER SYSTEM
(Required only for applications for new home/commercial construction)

I hereby apply to Providence City for permission to connect my premises at 115 E 550 N to the Providence City sewer system. I agree to the following:

1. Providence City will allow the applicant to connect to the sewer trunk line or the service line extension, if one exists.
2. Applicant will obtain an excavation permit and comply with it if connection to the trunk line is required.
   a. Applicant shall purchase an excavation permit.
   b. Applicant shall post an $800 bond with the City, $750 refundable upon satisfactory acceptance by the City.
   c. Installation shall follow all guidelines of Providence City standard specifications (a copy is available for purchase at the City Office).
   d. All work shall be inspected by the City. If not approved, the applicant will have the problems rectified at his expense to meet Providence City requirements.
   e. Applicant will bear all the costs associated with the permits, excavation, pipe, installation, backfill, compaction, and repair of curbs, sidewalks and streets.
   f. Applicant shall use the mechanical connection apparatus approved by the Public Works Director.
   g. All materials used that are placed on City property shall become the property of Providence City.
   h. Applicant shall call for a City inspector 48 hours prior to any work beginning on a City right-of-way. All work shall be inspected prior to backfill.
3. Before making connection with the sewer system, applicant shall cause the plumbing upon the premises to be inspected by the municipality, and if it is not approved, it shall be rectified at the applicant's expense.
4. The Providence City Water Department reserves the right to evaluate the feasibility of installing a sewer connection between November 1 and April 1.
5. Providence City shall maintain all sewer trunk lines in the City, but it shall be the responsibility of the home owner to maintain the line on the premises and to the junction with the sewer trunk line, commonly known as the "Y".
6. Applicant agrees to abide by all rules, regulations, resolutions or ordinances enacted or adopted by the governing body applicable to the Providence City Sewer System.

Jessica Williamson	Jessica Williamson/VHD LLC		6/9/21
Signature	Printed Name	On Behalf Of	Date

A
A0.2
NORTH ELEVATION (BLDG C)
SCALE: 1/8"=1'-0"

B
A0.2
SOUTH ELEVATION (BLDG C)
SCALE: 1/8"=1'-0"

D
A0.2
EAST ELEVATION (BLDG C)
SCALE: 1/8"=1'-0"

C
A0.2
WEST ELEVATION (BLDG C)
SCALE: 1/8"=1'-0"

BUILDING C (3B)

NORTH WALL
FIRE SEPARATION DISTANCE 30' OR GREATER – UNPROTECTED OPENINGS ALLOWED NO LIMIT – NONSPRINKLERED

SOUTH WALL
FIRE SEPARATION DISTANCE 25' TO LESS THAN 30' – UNPROTECTED OPENINGS ALLOWED 70% – NONSPRINKLERED

EAST WALL
FIRE SEPARATION DISTANCE 10' TO LESS THAN 15' – UNPROTECTED OPENINGS ALLOWED 15% – NONSPRINKLERED

WEST WALL
FIRE SEPARATION DISTANCE 30' OR GREATER – UNPROTECTED OPENINGS ALLOWED NO LIMIT – NONSPRINKLERED

		LENGTH		HEIGHT	SQUARE FEET	PERCENT
NORTH WALL – LEVEL 1		126'-4"		11'-3"	1,418	
	LENGTH	HEIGHT	SQ. FT.	NUMBER	TOTAL SQ. FT.	
DOOR TYPE D	9'-0"	8'-0"	72 S.F.	10	720 S.F.	
BREEZEWAY OPENING	8'-9"	9'-7"	84 S.F.	1	84 S.F.	
TOTAL					804 S.F.	56.6%
NORTH WALL-LEVELS 2&3 (EACH)		126'-4"		10'-9"	1,358	
	LENGTH	HEIGHT	SQ. FT.	NUMBER	TOTAL SQ. FT.	
WINDOW TYPE A	7'-0"	5'-0"	35 S.F.	8	280 S.F.	
DOOR TYPE C	6'-0"	6'-8"	40 S.F.	2	80 S.F.	
BREEZEWAY OPENING	8'-9"	9'-7"	84 S.F.	1	84 S.F.	
TOTAL					444 S.F.	32.6%
SOUTH WALL-LEVELS 1-3 (EACH)		104'-8"		10'-9"	1,128	
	LENGTH	HEIGHT	SQ. FT.	NUMBER	TOTAL SQ. FT.	
WINDOW TYPE A	7'-0"	5'-0"	35 S.F.	6	210 S.F.	
DOOR TYPE C	6'-0"	6'-8"	40 S.F.	2	80 S.F.	
BREEZEWAY OPENING	8'-9"	9'-7"	84 S.F.	1	84 S.F.	
TOTAL					374 S.F.	33.1%
EAST WALL – LEVEL 1		43'-4"		10'-9"	467	
	LENGTH	HEIGHT	SQ. FT.	NUMBER	TOTAL SQ. FT.	
WINDOW TYPE B	2'-0"	5'-0"	10 S.F.	4	40 S.F.	
DOOR TYPE E	4'-0"	6'-8"	30 S.F.	1	30 S.F.	
TOTAL					70 S.F.	14.9%
EAST WALL – LEVEL 2 & 3		43'-4"		10'-9"	467	
	LENGTH	HEIGHT	SQ. FT.	NUMBER	TOTAL SQ. FT.	
WINDOW TYPE B	2'-0"	5'-0"	10 S.F.	4	40 S.F.	.08%
WEST WALL – LEVEL 1		43'-4"		10'-9"	467	
	LENGTH	HEIGHT	SQ. FT.	NUMBER	TOTAL SQ. FT.	
WINDOW TYPE B	2'-0"	5'-0"	10 S.F.	4	40 S.F.	
DOOR TYPE E	4'-0"	6'-8"	30 S.F.	1	30 S.F.	
TOTAL					70 S.F.	14.9%
WEST WALL – LEVELS 2-3		43'-4"		10'-9"	467	
	LENGTH	HEIGHT	SQ. FT.	NUMBER	TOTAL SQ. FT.	
WINDOW TYPE B	2'-0"	5'-0"	10 S.F.	4	40 S.F.	.08%

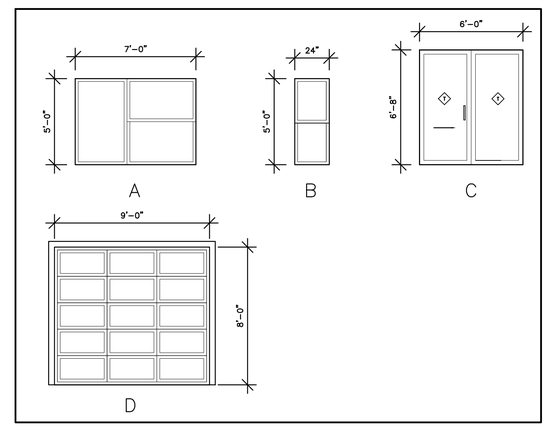

1
A0.2
WINDOW DETAIL
N.T.S.

STATE OF UTAH
11.6.20
KEVIN J. SCHOLZ
#7108472
REGISTERED ARCHITECT
LICENSED

SCHOLZ ARCHITECTS
ARCHITECTURE PLANNING INTERIOR DESIGN
1503 SOUTH 40 EAST STE. 230, PROVO, UT 84606
BUS: 801.373.2128 FAX: 801.373.2130 E-MAIL: kevin@scholz-arch.com

scholz ARCHITECTS

PROVIDENCE VINEYARD - BUILDING 3-B
PROVIDENCE UTAH

OPENING CALCULATIONS

Copyright © 2011 Scholz Architects. Concepts and designs contained herein are the property of the architect and may not be reproduced or used for any other purpose without written permission.

PLOT SCALE: 1/8"=1'-0"
DATE: 11.6.20
JOB: #19-004
A0.2_PR-B3_OC PW

ISSUES/REV:	DATE:

A0.2

PLANS ARE TO BE CONSIDERED NOT FOR CONSTRUCTION UNLESS SEAL AND SIGNATURE OF ARCHITECT ARE APPLIED.

A A0.3 **NORTH ELEVATION (BLDG D)**
SOUTH ELEVATION (BLDG E) SCALE: 1/8"=1'-0"

B A0.3 **SOUTH ELEVATION (BLDG D)**
NORTH ELEVATION (BLDG E) SCALE: 1/8"=1'-0"

C A0.3 **EAST ELEVATION (BLDG D)**
WEST ELEVATION (BLDG E) SCALE: 1/8"=1'-0"

NOTES:

– ALL OPENINGS ON WEST ELEVATION BLDG D & EAST ELEVATION BLDG E, WITH THE EXCEPTION OF WINDOW A.2 (DOUBLE HUNG), SHALL BE FIRE PROTECTED IN ACCORDANCE WITH IBC SECTION 716.3, SEE WINDOW SCHEDULE NOTE 5/A1.8 & WINDOW DETAIL 1/A0.3

D A0.3 **WEST ELEVATION (BLDG D)**
EAST ELEVATION (BLDG E) SCALE: 1/8"=1'-0"

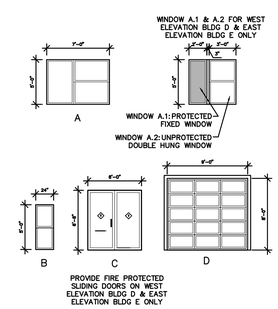

1 A0.3 **WINDOW DETAIL**
N.T.S.

BUILDING D (3B)

NORTH WALL
FIRE SEPARATION DISTANCE 30' OR GREATER – UNPROTECTED OPENINGS ALLOWED NO LIMIT – NONSPRINKLERED

SOUTH WALL
FIRE SEPARATION DISTANCE 30' OR GREATER – UNPROTECTED OPENINGS ALLOWED NO LIMIT – NONSPRINKLERED

EAST WALL
FIRE SEPARATION DISTANCE 30' OR GREATER – UNPROTECTED OPENINGS ALLOWED NO LIMIT – NONSPRINKLERED

WEST WALL
FIRE SEPARATION DISTANCE 15' TO LESS THAN 20' – UNPROTECTED OPENINGS ALLOWED 25% – NONSPRINKLERED

NORTH WALL – LEVEL 1		43'–4"		10'–9"	467	
	LENGTH	HEIGHT	SQ. FT.	NUMBER	TOTAL SQ. FT.	
WINDOW TYPE B	2'–0"	5'–0"	10 S.F.	4	40 S.F.	
DOOR TYPE E	4'–0"	6'–8"	30 S.F.	1	30 S.F.	
TOTAL					70 S.F.	14.9%
NORTH WALL – LEVELS 2–3		43'–4"		10'–9"	467	
	LENGTH	HEIGHT	SQ. FT.	NUMBER	TOTAL SQ. FT.	
WINDOW TYPE B	2'–0"	5'–0"	10 S.F.	4	40 S.F.	.08%
SOUTH WALL – LEVEL 1		43'–4"		10'–9"	467	
	LENGTH	HEIGHT	SQ. FT.	NUMBER	TOTAL SQ. FT.	
WINDOW TYPE B	2'–0"	5'–0"	10 S.F.	4	40 S.F.	.
DOOR TYPE E	4'–0"	6'–8"	30 S.F.	1	30 S.F.	
TOTAL					70 S.F.	14.9%
SOUTH WALL – LEVEL 2 & 3		43'–4"		10'–9"	467	
	LENGTH	HEIGHT	SQ. FT.	NUMBER	TOTAL SQ. FT.	
WINDOW TYPE B	2'–0"	5'–0"	10 S.F.	4	40 S.F.	.08%
		LENGTH		HEIGHT	SQUARE FEET	PERCENT
EAST WALL – LEVEL 1		126'–4"		11'–3"	1,418	
	LENGTH	HEIGHT	SQ. FT.	NUMBER	TOTAL SQ. FT.	
DOOR TYPE D	9'–0"	8'–0"	72 S.F.	10	720 S.F.	
BREEZEWAY OPENING	8'–9"	9'–7"	84 S.F.	1	84 S.F.	
TOTAL					804 S.F.	56.6%
EAST WALL–LEVELS 2&3 (EACH)		126'–4"		10'–9"	1,358	
	LENGTH	HEIGHT	SQ. FT.	NUMBER	TOTAL SQ. FT.	
WINDOW TYPE A	7'–0"	5'–0"	35 S.F.	8	280 S.F.	
DOOR TYPE C	6'–0"	6'–8"	40 S.F.	2	80 S.F.	
BREEZEWAY OPENING	8'–9"	9'–7"	84 S.F.	1	84 S.F.	
TOTAL					444 S.F.	32.6%
WEST WALL–LEVELS 1–3 (EACH)		104'–8"		10'–9"	1,128	
	LENGTH	HEIGHT	SQ. FT.	NUMBER	TOTAL SQ. FT.	
WINDOW TYPE A.1	2'–0"	5'–0"	10 S.F.	6	60 S.F.	
WINDOW TYPE A.2	3'–0"	5'–0"	15 S.F.	6	90 S.F.	
DOOR TYPE C	6'–0"	6'–8"	40 S.F.	2	80 S.F.	
BREEZEWAY OPENING	8'–9"	9'–7"	84 S.F.	1	84 S.F.	
TOTAL					314 S.F.	27.8%
EQUATION 7–2	(224/508) + (90/169) 0.44 + 0.53 = .97 ≤ 1			NOTE: WINDOWS ON WEST WALL TO BE MIXED (PROTECTED + UNPROTECTED) SEE ELEVATION D/A0.3 FOR MORE INFORMATION		

BUILDING E (3B)

NORTH WALL
FIRE SEPARATION DISTANCE 30' OR GREATER – UNPROTECTED OPENINGS ALLOWED NO LIMIT – NONSPRINKLERED

SOUTH WALL
FIRE SEPARATION DISTANCE 30' OR GREATER – UNPROTECTED OPENINGS ALLOWED NO LIMIT – NONSPRINKLERED

EAST WALL
FIRE SEPARATION DISTANCE 15' TO LESS THAN 20' – UNPROTECTED OPENINGS ALLOWED 25% – NONSPRINKLERED

WEST WALL
FIRE SEPARATION DISTANCE 30' OR GREATER – UNPROTECTED OPENINGS ALLOWED NO LIMIT – NONSPRINKLERED

NORTH WALL – LEVEL 1		43'–4"		10'–9"	467	
	LENGTH	HEIGHT	SQ. FT.	NUMBER	TOTAL SQ. FT.	
WINDOW TYPE B	2'–0"	5'–0"	10 S.F.	4	40 S.F.	
DOOR TYPE E	4'–0"	6'–8"	30 S.F.	1	30 S.F.	
TOTAL					70 S.F.	14.9%
NORTH WALL – LEVELS 2–3		43'–4"		10'–9"	467	
	LENGTH	HEIGHT	SQ. FT.	NUMBER	TOTAL SQ. FT.	
WINDOW TYPE B	2'–0"	5'–0"	10 S.F.	4	40 S.F.	.08%
SOUTH WALL – LEVEL 1		43'–4"		10'–9"	467	
	LENGTH	HEIGHT	SQ. FT.	NUMBER	TOTAL SQ. FT.	
WINDOW TYPE B	2'–0"	5'–0"	10 S.F.	4	40 S.F.	.
DOOR TYPE E	4'–0"	6'–8"	30 S.F.	1	30 S.F.	
TOTAL					70 S.F.	14.9%
SOUTH WALL – LEVEL 2 & 3		43'–4"		10'–9"	467	
	LENGTH	HEIGHT	SQ. FT.	NUMBER	TOTAL SQ. FT.	
WINDOW TYPE B	2'–0"	5'–0"	10 S.F.	4	40 S.F.	.08%
EAST WALL–LEVELS 1–3 (EACH)		104'–8"		10'–9"	1,128	
	LENGTH	HEIGHT	SQ. FT.	NUMBER	TOTAL SQ. FT.	
WINDOW TYPE A.1	2'–0"	5'–0"	10 S.F.	6	60 S.F.	
WINDOW TYPE A.2	3'–0"	5'–0"	15 S.F.	6	90 S.F.	
DOOR TYPE C	6'–0"	6'–8"	40 S.F.	2	80 S.F.	
BREEZEWAY OPENING	8'–9"	9'–7"	84 S.F.	1	84 S.F.	
TOTAL					314 S.F.	27.8%
EQUATION 7–2	(224/508) + (90/169) 0.44 + 0.53 = .97 ≤ 1			NOTE: WINDOWS ON EAST WALL TO BE MIXED (PROTECTED + UNPROTECTED) SEE ELEVATION D/A0.3 FOR MORE INFORMATION		
		LENGTH		HEIGHT	SQUARE FEET	PERCENT
WEST WALL – LEVEL 1		126'–4"		11'–3"	1,418	
	LENGTH	HEIGHT	SQ. FT.	NUMBER	TOTAL SQ. FT.	
DOOR TYPE D	9'–0"	8'–0"	72 S.F.	10	720 S.F.	
BREEZEWAY OPENING	8'–9"	9'–7"	84 S.F.	1	84 S.F.	
TOTAL					804 S.F.	56.6%
WEST WALL–LEVELS 2&3 (EACH)		126'–4"		10'–9"	1,358	
	LENGTH	HEIGHT	SQ. FT.	NUMBER	TOTAL SQ. FT.	
WINDOW TYPE A	7'–0"	5'–0"	35 S.F.	8	280 S.F.	
DOOR TYPE C	6'–0"	6'–8"	40 S.F.	2	80 S.F.	
BREEZEWAY OPENING	8'–9"	9'–7"	84 S.F.	1	84 S.F.	
TOTAL					444 S.F.	32.6%

SCHOLZ ARCHITECTS
ARCHITECTURE PLANNING INTERIOR DESIGN
1503 SOUTH 40 EAST STE. 230, PROVO, UT 84606
BUS: 801373.2128 FAX: 801373.2130 E-MAIL: kevinescholz-arch.com

PROVIDENCE VINEYARD - BUILDING 3-B
PROVIDENCE UTAH
OPENING CALCULATIONS

Copyright © 2011 Scholz Architects. Concepts and drawings contained herein are the property of the architect and may not be reproduced or used for any purpose without the written permission of the architect.

PLOT SCALE: 1/8"=1'-0"
DATE: 11.6.20
JOB: #19-004
A0.3_PR-B3_OC
PW

ISSUES/REV:	DATE:

PLANS ARE TO BE CONSIDERED INCOMPLETE WITHOUT THE ARCHITECT'S SEAL AND SIGNATURE OF ARCHITECT ARE AFFIXED.

A0.3

Stone- Slate
Lueders

2

SW7005
Pure White
Stucco

3

SW6168
Moderne White
Stucco

4

SW7066
Gray Matters
Stucco

VINEYARD PHASE 3
FINAL PLAT

PART OF THE SOUTHWEST QUARTER OF SECTION 2
AND SOUTHEAST QUARTER OF SECTION 3
TOWNSHIP 11 NORTH, RANGE 1 EAST
SALT LAKE BASELINE AND MERIDIAN
PROVIDENCE, UTAH

SCALE: 1"= 40' (24x36 PLAN SET)

ADDRESS/LOT AREA TABLE		
LOT	ADDRESS	LOT AREA
84	532 NORTH 100 EAST	1120 s.f.
85	536 NORTH 100 EAST	1120 s.f.
86	540 NORTH 100 EAST	1120 s.f.
87	544 NORTH 100 EAST	1120 s.f.
88	548 NORTH 100 EAST	1120 s.f.
89	554 NORTH 100 EAST	987 s.f.
90	558 NORTH 100 EAST	987 s.f.
91	562 NORTH 100 EAST	987 s.f.
92	564 NORTH 100 EAST	987 s.f.
93	547 NORTH 100 EAST	987 s.f.
94	543 NORTH 100 EAST	987 s.f.
95	539 NORTH 100 EAST	987 s.f.
96	535 NORTH 100 EAST	987 s.f.
97	531 NORTH 100 EAST	987 s.f.
98	527 NORTH 100 EAST	987 s.f.
CONDOMINIUMS		
B	139 EAST 550 NORTH	
C	115 EAST 550 NORTH	
D	536 NORTH 130 EAST	
E	537 NORTH 130 EAST	

LEGEND

- PRIVATE
- PRIVATE COMMON AREA (EXCEPT SPRING CREEK PARKWAY AND 170 EAST STREET WHICH ARE DEDICATED PUBLIC RIGHT OF WAYS) (SEE NOTE 7)
- LIMITED COMMON AREA RESERVED FOR UNIT(S) (SEE NOTE 6)
- EASEMENT AS NOTED

CURVE TABLE					
CURVE	LENGTH	RADIUS	DELTA ANGLE	CHORD BEARING	CHORD LENGTH
C56	34.63	767.50	2°35'07"	S87°48'15"E	34.63
C58	162.93	533.00	17°30'51"	S79°03'13"W	162.29
C59	26.37	500.00	3°01'19"	S88°08'47"E	26.37
C60	107.60	500.00	12°19'47"	S80°28'14"E	107.39
C61	80.64	712.50	6°29'04"	N77°32'52"W	80.59
C62	97.23	712.50	7°49'08"	N84°41'58"W	97.15
C63	97.01	1000.00	5°33'30"	S82°33'26"E	96.97
C64	0.89	1000.00	0°03'03"	S85°21'42"E	0.89
C65	19.63	1000.00	1°07'28"	S85°56'57"E	19.63
C66	33.84	750.00	2°35'07"	S87°48'15"E	33.84
C67	27.12	512.50	3°01'55"	S88°08'29"E	27.12
C68	57.87	512.50	6°28'11"	S83°23'26"E	57.84
C69	5.92	700.00	0°29'05"	N74°32'52"W	5.92
C70	52.33	512.50	5°51'00"	S77°13'50"E	52.30
C71	67.97	700.00	5°33'48"	N77°34'19"W	67.94
C72	67.97	700.00	5°33'48"	N83°08'06"W	67.94
C73	32.84	700.00	2°41'17"	N87°15'39"W	32.84

LINE TABLE		
LINE	LENGTH	BEARING
L40	48.19	S34°13'44"E
L41	26.96	N55°43'28"E
L42	28.91	S43°13'24"E
L43	56.36	S30°53'09"E
L44	35.78	N35°09'19"E
L45	41.16	S48°04'03"W

RECEIVED
JUN 10 2021
By DC

SURVEYOR'S CERTIFICATE

I, Brian G. Lyon, a Registered Land Surveyor, hold Certificate No. 275617, as prescribed by the laws of the State of Utah, and do hereby certify that by authority of the owners, I have made a survey of the tract of land shown on this plat, which is accurately described therewith, and have subdivided said tract of land into lots and streets to be hereafter known as VINEYARD, PHASE 3, and that the same has been surveyed and staked on the ground as shown on this plat.

Signed on this _____day of _____ 2020.

PROFESSIONAL LAND SURVEYOR 275617 BRIAN G. LYON STATE OF UTAH
12-2-20

NOTES

1. The developer shall meet Providence City Code Title 8 Chapter 1, Section 21.
   Indoor use: 67 Residences x 0.45 ac-ft = 30.15 ac-ft
   Outdoor use: 2.20 acres x 64% x 4 = 5.63 ac-ft
2. 5/8" rebar with cap will be set at all rear and interior property corners. Curb pins will be set at the intersection of the lot line with the curbing once it is placed.
3. All lots have an adequate buildable envelope with regards to hazardous slope, building, water and zoning setback.
4. The City will not issue any building permit for any lot until minimum improvements, as specified in Section 11-5-2 of the City code are complete.
5. There are no know Sensitive lands as defined in Providence Code 10-5-2.
6. All driveways, patios, decks and balconies as shown on each unit contained within the project are considered limited common areas. They are set aside and reserved for the use of the respective unit to which they are attached and/or appurtenant.
7. All other areas contained within the project, but not shown with diagonal stripes or shading or public streets are considered common area, including parking, private streets, storm water detention and drainage easement area.
8. All common areas and limited common areas are considered to be an easement for all public utilities, irrigation and drainage purposes. This includes the ingress/egress area.
9. All expenses involving the necessary improvements or extensions for a culinary water system, sanitary sewer system, gas service, electrical service, telephone service, cable television service, grading and landscaping, storm drainage systems, curb and gutters, fire hydrants, pavement, sidewalks, signage, street lighting and other improvements shall be paid for by the subdivider.
10. With Exception of those areas under private ownership, the property is subject to a blanket easement over, across, above, and under it for ingress, egress, installation, maintenance, repair, and replacement of utilities exclusively servicing the property. Utilities include, without limitation, water, sewer, gas, telephone, and electricity with exception of those areas under private ownership.
11. There is a 10 foot Public Utility Easement (P.U.E.) along all single family lot frontages.

LEGAL DESCRIPTION

Part of the Southwest Quarter of Section 2 and Southeast Quarter of Section 3, Township 11 North, Range 1 East of the Salt Lake Meridian described as follows:

Commencing at the Northeast Corner of Section 2, Township 11 North, Range 1 East of the Salt Lake Meridian monumented with a Cache County Brass Cap, thence S89°42'27"W 5433.19 feet to the Northwest Corner of Section 2; thence S00°04'53"W 2997.19 feet to a point on the south right of way line of 600 South Street; thence S01°10'17"W 844.40 feet along the east line of South Fields Subdivision to the POINT OF BEGINNING and running

thence S 06°55'23" E 33.86 feet; thence S 03°19'36" W 19.12 feet;
thence S 86°02'03" E 33.78 feet to the boundary of Vineyard, Phase 1;
thence along the boundary of Vineyard, Phase 1 the next nine courses:
1) thence S 01°59'43" W 139.68 feet; 2) thence N 89°05'49" W 7.36 feet;
3) thence Westerly, 34.63 feet along a curve to the right having a radius of 767.50 feet, a central angle of 02°35'07" and a chord that bears N 87°48'15" W 34.63 feet;
4) thence N 86°30'42" W 10.74 feet; 5) thence S 00°18'12" E 186.00 feet;
6) thence S 89°39'26" E 17.30 feet; 7) thence S 00°20'34" W 30.00 feet to the south right of way line of 520 North Street;
8) thence S 00°30'34" W 87.52 feet;
9) thence Westerly, a distance of 162.93 feet along a non tangent curve to the left of which the radius point lies S 02°11'21" E, with a radius of 533.00 feet, having a central angle of 17°30'51" and a chord that bears S 79°03'13" W 162.29 feet;
thence N 89°28'28" W 102.70 feet; thence N 83°53'11" W 140.98 feet;
thence N 01°10'17" E 517.35 feet; thence S 89°05'49" E 394.98 feet to the point of beginning, containing 4.789 acres, more or less.

OWNERS DEDICATION

Know all by these presents that we the undersigned owners of the above-described tract of land, having caused the same to be subdivided into single family dwelling lots, townhome lots, streets and common areas to be hereafter know as VINEYARD, PHASE 3, do hereby dedicate for the perpetual use of the owners of _____ all areas shown as private streets and common areas on this plat , subject to declarations of covenants, conditions and restrictions for the project which will be recorded n the Office of the County Recorder of Cache County, Utah, concurrently with the recording of this plat. The undersigned further consents to the ecordation of this plat in accordance with Utah State Law. We also edicate easements as shown hereon to the public for the installation and maintenance of utilities. Also hereby convey to any and all public utility a perpetual non-exclusive easement over the public utility shown on this plat, the same to be used for the installation tenance, and operation of utility lines and facilities. Furthermore, we porate all notes and restrictions as listed hereon.

Public utilities, and drainage easements: Grant and dedicate a perpetual and easement over, upon and under the lands designated on the plat public utility, drainage easements, the same to be used for the allation, maintenance and operation of public utility service lines, storm nage facilities whichever is applicable as may be authorized by vidence City, Utah with no buildings or structures being erected within such easements.

In witness whereof the undersigned have hereunto set their signatures this _____ day of _____ 20_____.

_____
Ridgeview Park, LLC
Jeff Jackson, Managing Member

LIMITED LIABILITY COMPANY ACKNOWLEDGEMENT

STATE OF UTAH }
COUNTY OF _____ } ss

On this ____ day of _____, in the year 2020, before me _____, a notary public, personally appeared Jeff Jackson, Manager Member of Ridgeview Park, LLC, proved on the basis of satisfactory evidence to be the person whose name is subscribed to this document, and acknowledged that said document was signed by him in behalf of said Ridgeview Park, LLC by authority of its bylaws.

Notary Public Signature_____
Notary Public Full Name_____
Commission Number_____
My Commission Expires_____
A Notary Public Commissioned in Utah

LAND USE AUTHORITY APPROVAL

APPROVED THIS _____DAY OF _____, 2020 BY THE PROVIDENCE LAND USE AUTHORITY

_____

MAYOR APPROVAL

APPROVED THIS _____DAY OF _____, 2020 BY THE PROVIDENCE CITY MAYOR

_____
PROVIDENCE CITY MAYOR

CITY ENGINEER APPROVAL

APPROVED THIS _____DAY OF _____, 2020 BY THE PROVIDENCE CITY ENGINEER

_____
PROVIDENCE CITY ENGINEER

UTILITIES APPROVAL

Each of the utility companies below state that they have reviewed the plat, that they approve the plat as it relates to their particular company, that they are in agreement with placing all of their utilities underground within the right-of-way as shown on the plans and are willing to provide the needed service for the development.

_____
CITY'S CULINARY WATER AND SANITARY SEWER REPRESENTATIVE

_____
ROCKY MNTN POWER REPRESENATIVE

_____
DOMINION ENERGY REPRESENTATIVE

_____
COMCAST CABLE REPRESENTATIVE

_____
CENTURY LINK REPRESENATIVE

Groundwater Note:
A geotechnical study was performed on this parcel by A Cache Corp. prior to the development of this subdivision. In that report, areas of potential high ground water were encountered. The full geotechnical report is available in the Providence City Public Works office. The report suggested installing a land drain to mitigate the high water in order to make installing basements feasible in this development. A land drain will be installed with the utility improvements prior to any home construction as suggested in the report, and as required by Providence City. Individual footing drains are to be installed with each home, and connected to the land drain.

SETBACKS

Setbacks (Single Family Detached, Duplex)
Front Yard (street garage acces): 20 feet min./35 feet max.
Front Yard (alley garage access): 10 feet min.
Rear Yard: 10 feet min.
Side Yard: 7.5 feet min.
Corner Lot: 15 feet min. on side adjacent to street

Setbacks (Single Family Attached, Apartment)
No front or rear building setback is in place for single family attached and apartment housing, provided that the development's open space is integrated throughout the project so that each group of single family attached dwelling units and each building of apartments has a minimum of 10' of landscaping open space on all sides, and said landscaping being calculated from the front/rear plane of the dwelling unit or exterior wall of the apartment building, with the exception of one side of single-family attached which may be needed for alley garage access. Buildings whose front plan faces the front plane of another building shall have a minimum of 20' separation between the building's front planes.

COUNTY RECORDER'S NO.

State of Utah, County of Cache, recorded and filed at the request of _____
Date _____ Time _____ Fee _____
Entry _____
Index _____
Filed in: File of plats County Recorder

PLANNING COMMISSION APPROVAL

APPROVED BY THE CITY OF PROVIDENCE PLANNING COMMISSION COMMISSION THIS _____DAY OF _____, 2020, A.D.

_____ _____

CITY ATTORNEY APPROVAL

APPROVED THIS _____ DAY OF _____, 2020 BY THE PROVIDENCE CITY ATTORNEY

_____
PROVIDENCE CITY ATTORNEY

ALLIANCE CONSULTING ENGINEERS
150 EAST 200 NORTH SUITE P
LOGAN, UTAH 84321
(435)755-5121
allianceclogan@yahoo.com

OWNER:
RIDGEVIEW PARK, LLC
50 EAST 2500 N SUITE 101
NORTH LOGAN, UTAH 84341
(435)752-1480

No.	REVISIONS/ SUBMISSIONS	DATE

REVIEWED : | DRAWN :
CAD FILE : | PROJECT NO. :

PROJECT TITLE: VINEYARD, PHASE 3
PART OF THE SOUTHWEST QUARTER OF SECTION 2 AND SOUTHEAST QUARTER OF SECTION 3
TOWNSHIP 11 NORTH, RANGE 1 EAST
SALT LAKE BASELINE AND MERIDIAN
PROVIDENCE, UTAH

DRAWING TITLE: FINAL PLAT

DATE : DEC.2020
DRAWING No. 1
1 of 3

High Water Table Mitigating Strategies:

Land drain

Condos will be slab on grade, no basements.

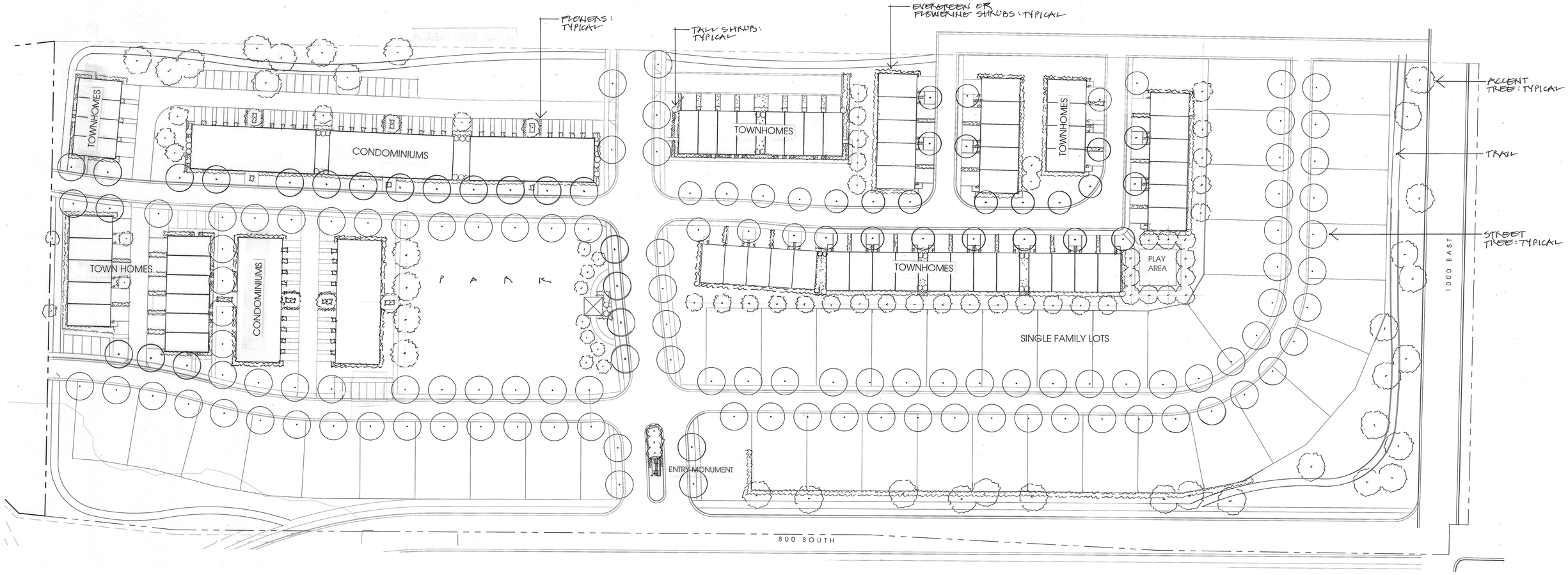

Site Tabulation . Vineyard . Providence, Utah . Ironwood Construction

		Area	Percentage
Site:		17.00 Acres	
ROW dedication		0.06 Acres	
Net Site		16.94 Acres	100%
Lots	202,575 Sq. Ft.	4.65 Acres	
Buildings	94,656 Sq. Ft.	2.17 Acres	12.8%
Condominium	32,400 Sq. Ft.	0.74 Acres	
Town homes	62,256 Sq. Ft.	1.43 Acres	
Pavements	179,590 Sq. Ft.	4.12 Acres	24.3%
Streets & Alleys	146,904 Sq. Ft.	3.37 Acres	
Parking	5,784 Sq. Ft.	0.13 Acres	
Driveways	26,902 Sq. Ft.	0.62 Acres	
Landscape	252,630 Sq. Ft.	5.80 Acres	34.2%
Park	43,500 Sq. Ft.	1.00 Acres	

Preliminary Plant List . Vineyard . Providence, Utah . Ironwood Construction

This is a preliminary list of plant materials for use on the final planting plan for this project. These plants are representative, but the list may not be exhaustive of all plants that ultimately may be used, nor may all these materials appear on the final planting plan.

Street Trees: Quercus rubra / Red Oak Acer x a.p. 'Warrensred' / Pacific Sunset Maple Fraxinus p.l. 'Patmore' / Patmore Ash Acer p. 'Deborah' / Deborah Maple	2" caliper
Accent Trees: Malus 'Spring Snow / Spring Snow Crabapple Gleditsia t.i. 'Shademaster' Thornless Honeylocust Syringa reticulata 'Ivory Silk' / Tree Lilac	1 ½" caliper
Tall Shrubs: Virburnum burkwoodi / Burkwood Viburnum Ribes alpinum / Alpine Currant Spiraea vanhoutei / Bridal Wreath Cornus stolonifera / Red Osier Dogwood	5 gallon
Evergreen Shrubs: Taxus baccata repandens / English Spreading Yew	5 gallon
Mahonia repens / Creeping Oregon Grape	1 gallon
Flowering Shrubs: Spiraea b. 'Anthony Waterer' / Dwarf Red Spiraea	5 gallon
Hydrangea a. 'White Dome' / Hydrangea	
Flowers: Rosa knockout / Knockout Roses Veronica 'Royal Candles' / Speedwell Iberis sempervirens / Evergreen Candytuft Heuchera spp. / Coral Bells Rudbeckia hirta / Black-eyed Susan Coreopsis v. 'Zagreb' / Coreopsis Anemone sylvestris 'Snowdrop' / Windflower Salvia s.n. 'May Night' / Salvia	1 gallon
Lawn	

North 1" = 50 Feet

50 25 0 50 100

15 MARCH 2019

Preliminary Planting Plan

VINEYARD

Providence, Utah

Ironwood Construction . 50 East 2500 North . North Logan, Utah

R. MICHAEL KELLY
CONSULTANTS
LAND PLANNING • LANDSCAPE ARCHITECTURE
P.O. Box 469, Millville, UT 84326 435.753.2955

VINEYARD PHASE 3
GRADING/DRAINAGE PLAN

0 40 80

SCALE: 1"= 40' (24x36 PLAN SET)
SCALE: 1"= 80' (11x17 PLAN SET)

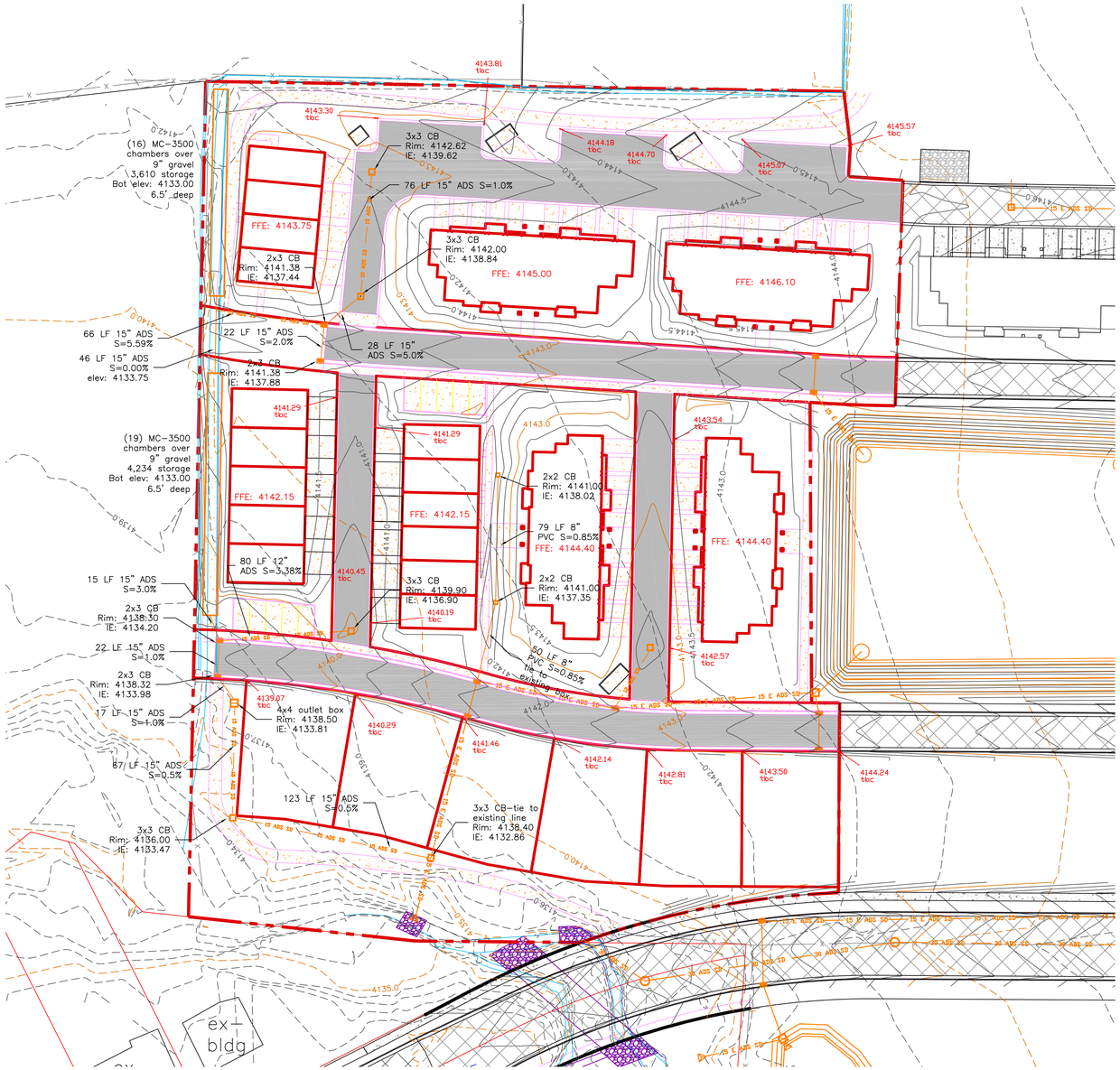

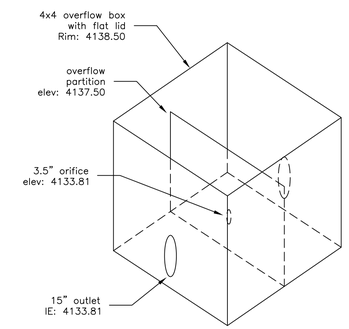

OVERFLOW BOX DETAIL

Pond C

Drainage Area to Pond:				3.43	acres					
Weighted 'C' value for Pond Drainage Area:				0.50						
Allowable Infiltration Rate:				1.0	inches/hr =	0.0014	ft/min	per NRCS		
Pond Bottom Area:			20	ft x	148	ft =		2960	sq. ft.	
Allowable Discharge Rate:				0.1	cfs/acre					

100-Year Return Period

Interval (min)	Precip.* Intensity (in/hr)	Precip. Depth (in)	Area (ac)	C Value	CxAx3630 (ft^3/in)	Accum. Inflow (ft3/min)	Allowable Discharge (ft^3/min)	Accum. Discharge (ft^3)	Required Storage (ft^3)	(ac-ft)
5	5.53	0.46	3.43	0.5	6225	2869	25	123	2745	0.06
10	4.21	0.70	3.43	0.5	6225	4368	25	247	4121	0.09
15	3.48	0.87	3.43	0.5	6225	5422	25	370	5052	0.12
30	2.34	1.17	3.43	0.5	6225	7284	25	741	6543	0.15
60	1.45	1.45	3.43	0.5	6225	9027	25	1481	7545	0.17
120	0.85	1.69	3.43	0.5	6225	10521	25	2963	7558	0.17
180	0.60	1.80	3.43	0.5	6225	11206	25	4444	6761	0.16
360	0.37	2.19	3.43	0.5	6225	13634	25	8889	4745	0.11
720	0.23	2.75	3.43	0.5	6225	17108	25	17778	0	0.00
1440	0.15	3.48	3.43	0.5	6225	21665	25	35555	0	0.00

Values taken from NOAA

LEGEND

- 15 ADS SD — NEW STORM AS NOTED
- EXISTING MJR CONTOUR (5')
- EXISTING MNR CONTOUR (1')
- PROPOSED MJR CONTOUR (2.5')
- PROPOSED MNR CONTOUR (0.5')
- EXISTING ASPHALT
- PROPOSED ASPHALT

REGISTERED PROFESSIONAL ENGINEER
NO. 368590
ADAM T. MACKELPRANG
8-5-2020
STATE OF UTAH

ALLIANCE CONSULTING ENGINEERS
150 EAST 200 NORTH SUITE P
LOGAN, UTAH 84321
(435)755-5121
alliancelogan@yahoo.com

OWNER:
RIDGEVIEW PARK, LLC
50 EAST 2500 N SUITE 101
NORTH LOGAN, UTAH 84341
(435)752-1480

No.	REVISIONS/ SUBMISSIONS	DATE

DRAWN :
REVIEWED :
PROJECT NO. :
CAD FILE :

PROJECT TITLE
VINEYARD PHASE 3
PART OF THE SOUTHWEST QUARTER OF SECTION 2 AND SOUTHEAST QUARTER OF SECTION 3 TOWNSHIP 11 NORTH, RANGE 1 EAST SALT LAKE BASELINE AND MERIDIAN PROVIDENCE, UTAH

DRAWING TITLE
GRADING/DRAINAGE PLAN

DATE : OCT,2019
DRAWING No.
4

PROVIDENCE CITY Land Use Authority – Staff Report Meeting Date: June 16, 2021		
Request: Applicant is requesting approval of a conditional use and zoning approval for a condominium building located at 536 N 130 E, Providence UT.		
Item Type: Conditional Use	**Applicant:** Visionary Homes	**Property Address:** 536 N 130 E Providence UT (Bldg. E)
Parcel ID #: 02-301-COMM	**General Plan**: LCR	**Zone**: LCR
Background Information: Complete Application was received June 4, 2021; application contained: 1. A complete Providence City Conditional Use application. 2. Payment of $100 application fee. Rob Stapley, Providence City Public Works Director, inspected the current infrastructure on June 14, 2021		

FINDINGS OF FACT:

1. UCA 10-9a-507. Conditional Uses allow a municipality to adopt a land use ordinance that includes conditional uses and provisions for conditional uses that require compliance with standards set for in an applicable ordinance.
2. Providence City Code (PCC) 10-5 Sensitive Areas, Section 1 Conditional use permit required states, all requests for permits involving a lot, parcel or site located wholly or partially within an area subject to the Hazard Flood (HF), Hazard Slope (HS), Hazard Water Table (HW) or Hazard Earthquake Primary Fault (HE), Hazard Wildfire (WF) regulations, shall be dealt with as a request for a conditional use permit under the provisions of Section 10-3-5 of this Title. All applications shall comply with the following regulations before any permit shall be issued.
3. PCC 10-3-5 Conditional Use Permits allows the City to impose reasonable conditions: to mitigate the reasonably anticipated detrimental effects of the proposed use on the health, safety, or general welfare of persons residing, working, or conducting business in the vicinity; to mitigate injury to property in the vicinity; to mitigate any risk to safety of persons or property because of vehicular traffic or parking, large gatherings of people, or other causes.

CONCLUSIONS OF LAW:

1. Providence City has adopted land use ordinances that include conditional uses and provisions for conditional uses.
2. This parcel is in a Hazard Water Table area.
3. Providence City has the authority to impose reasonable conditions to mitigate the reasonably anticipated detrimental effects of the proposed use.
4. The request meets the requirements of the Codes listed in the Findings of Fact with the following conditions:

CONDITIONS:

1. The applicant will continue to meet all relevant federal, state, county, and Providence City rules, laws, codes, ordinances.
2. The applicant will mitigate Hazard Water Table by: See High Water Table Mitigating Strategies.

DRAFT

3. This conditional use is for the condominium building only as shown on the plat map date stamped June 4, 2021.
4. Payment of fees listed on the Providence City Zoning Permit.
5. Approval by the City of any submitted application or paperwork does not alleviate the owners and/or their agents from their responsibility to understand and conform to local, state, and federal laws. Providence City's approval is not intended to and cannot be construed to allow any laws to be violated.

DRAFT

PROVIDENCE CITY
APPLICATION FOR A CONDITIONAL USE

FOR OFFICE USE ONLY
Date _____
Payment Form _____
Amount_____
Receipt #_____
Clerk
_____

Please Note: City Staff will NOT accept the application and fee payment if they are incomplete. Incomplete applications will NOT be processed or scheduled for review by the City.

Initial JW **Name** Jessica Williamson

Date 6/4/21

SUBMITTAL REQUIREMENTS **Staff Check**

- $100 application fee _____
- An 11"x17" of the property showing the location, function and characteristics of the use, including parking and percentage of space being used _____
- Cache County plat map of the property
- Copy of Cache County GIS Parcel Summary _____
  http://66.232.67.238/Websites/Parcel%20and%20Zoning%20Viewer/
- Mitigation Strategies for applicable sensitive areas _____
- Mailing addresses for the owners of adjacent properties _____
- Property owner consent for pursuit of conditional use (if owner is different than Applicant) _____
- Electronic copy of structure elevations & square footage including attached garage(s), covered porches, covered decks etc. _____
- Electronic copy of **ALL** submittals (email or flash drive is acceptable) _____

Applicant Information (all information MUST be provided)

Name VHD LLC
Address 50 E 2500 N Ste. 101 North Logan, UT 84341
Phone 435-752-1480 Email jessica@visionaryhomes.com

Party Responsible for Payment (if different than applicant)- the individual/firm to whom any and all professional services invoices (attorney/engineer/etc.) will be sent and who will be responsible for payment of such invoices.
Name_____
Address_____
Phone_____Email_____

Property Information
Owner of record VHD LLC
Owner address 50 E 2500 N Ste. 101 North Logan, UT 84341
Owner phone 435-752-1480 Owner email jessica@visionaryhomes.com
Parcel address Condo Bldg. E, 536 N 130 E Parcel Tax I.D._____
Zone_____ Height 42' Initial JW
Setbacks (front yard) _____ (side yard) _____ (rear yard) _____ Initial JW

Written Statement of Request (attach additional sheets if necessary)

- Briefly explain why you are seeking a conditional use and what the intended use of the property will be if the conditional use is granted.

We are seeking a conditional use permit to begin construction on a 10 unit condo building.

164 N. Gateway Dr * Providence UT 84332
435-752-9441 * Fax: 435-753-1586 * email: sbankhead@providence.utah.gov

Property owner and contractor shall have responsibility to determine grades, and final placement and elevations of footings/foundations. Property owner and contractor shall be responsible for compliance with all state, national and local building codes and ordinances. Initial JW **Name** Jessica Williamson

Approval by the city of any application submittal or paperwork does not alleviate the owners from their responsibility to understand and conform to local, state and federal laws. Providence City's approval is not intended to and cannot be construed to allow any laws to be violated. Initial JW

By signing this document, you agree that Providence City will bill you for any and all professional firm fees as they arise throughout the approval process. This is in addition to application fees. All subdivisions require engineering review throughout the approval process, such as but not limited to reviews of development agreements, construction drawings, preliminary and final plats, and inspections. These services are billed by our city engineer at an hourly rate. Some subdivision applications may also require legal review. Other applications, such as but not limited to conditional uses, may also require engineering and/or legal review at the City's discretion. You agree to reimburse the City for all such costs, whether or not you were forewarned about such costs, and that the City cannot predict all situations in which professional services may be required in order to process your application. Initial JW

I declare under penalty of perjury that I am making this application of my own free will and choice and that the statements, answers, and documents submitted in connection with this application are true and correct to the best of my knowledge.

Jessica Williamson	Jessica Williamson/VHD LLC	6/4/21
Signature of Applicant	Printed Name	Date

The following is a general summary of which body reviews each land use application in Providence City. Public hearings may be required by the Planning Commission and City Council, as shown below. This matrix does not include zoning clearance/permits for new single-home construction or for business licenses, both of which are reviewed and approved by city staff.

Application	Executive Staff	Land Use Authority	Planning Commission	Public Hearing	City Council	Public Hearing	Appeal Authority	Filing Fee[1]
Code Amendment	✓	----	✓	✓[2]	✓	----	----	$100
Annexation	✓	----		----	✓	✓	----	$150
Rezone	✓	----	✓	✓	✓	----	----	**$100**
Conditional Use	✓	✓		----	----	----	----	**$100**
Subdivision Concept Plan	✓	----	----	----	----	----	----	$300
Preliminary Subdivision Plat	✓	----	✓	----	----	----	----	$400
Final/Amended Subdivision Plat[3]	✓	----	✓	----	✓[4]	----	----	$600
Site Plan	✓	✓	----	----	----	----	----	$50
Lot Consolidation[5]	✓	----	✓	----	----	----	----	$50
Exception to Title[6]	✓	----	✓	----	✓	----	----	$100
General Plan Amendment	✓	----	✓	✓	✓	----	----	$100
Right-of-Way Vacation	✓	----	✓	----	✓	✓	----	$100
Variance/ Appeal	----	----	----	----	----	----	✓	$100

[1] Filing Fees do **not** include professional firm review fees. Those will be billed to the applicant separately.
[2] Public Hearing required at Planning Commission only when the proposed code amendment is related to land use.
[3] Construction drawings are reviewed/approved by the City Engineer and Public Works Director.
[4] The City Council does not review the final plat itself, but rather reviews and approves the development agreement associated with the final plat.
[5] Lot consolidations are only required to have City approval when they are in a platted/recorded subdivision.
[6] Developers may ask for an exception from the requirements of the Providence City Subdivision Code (Title 11) through this process. All other variance/exception requests shall be handled by the Appeal Authority.

164 N. Gateway Dr * Providence UT 84332
435-752-9441 * Fax: 435-753-1586 * email: sbankhead@providence.utah.gov

Residential Site Plan Application

FOR OFFICE USE ONLY
Date _____
Payment Form _____
Amount_____
Receipt #_____
Clerk _____

Date: 6/4/21

Required Submittals

Please Note: City Staff will NOT accept the application and fee payment if they are incomplete. Incomplete applications will NOT be processed or scheduled for review by the City. Application fees do not include professional firm fees, which will be billed separately. Engineered site plans may, at the City's discretion, be required. The City will contact the applicant if an engineered site plan is deemed necessary. Accessory buildings include sheds (over 200 sq ft) and all detached buildings (shop, garage, etc.)

Name Jessica Williamson/VHD LLC **Initial** JW

Construction Type	Application	Filing Fee $50- New Home $25- all other	11x17 Site Plan Must Include:			Cache County Plat Map	Stormwater NOI Permit	Stormwater Pollution Prevention Plan (SWPPP)
			Existing & proposed buildings, dimensions, & setbacks	Existing/ proposed utilities	Dimensions of driveway cut – (35' max)			
New Home								
Acc. Building							*	*
Addition							*	*
Deck							*	*
Other								

*May not apply in all cases

Applicant Information

Name: VHD LLC
Mailing address: 50 E 2500 N Ste 101 North Logan, UT 84341
Telephone: 435-752-1480 Email: jessica@visionaryhomes.com

Property Owner Information (If applicant is not the property owner, the application **must** include the property owner's information and written consent for the applicant to pursue the permit)

Name:_____
Mailing address:_____
Telephone:_____ Email:_____

Utilities (circle, if applicable): Septic tank City sewer Water Well
Construction Type (circle): New home Accessory building Deck Addition Other
Do the plans include an Accessory Apartment Unit (circle)**:** Yes No
Is this an Accessory Dwelling Unit (circle)**:** Yes No

Project Information

Address: Condo Bldg. D 536 N 130 E

Subdivision: Vineyard Parcel Tax ID: _____

Square footage for fire flow (includes all floors and all areas under the roof, including garages and covered porches):

16,252 Initial JW

Zone _____ Height 42' Initial JW

Setbacks (front yard) _____ (side yard) _____ (rear yard) _____ Initial JW

Contractor Information

Name: VHD LLC

Mailing address: 50 E 2500 N Ste 101 North Logan, UT 84341

Telephone: 435-752-1480 Email: jessica@visionaryhomes.com

Stormwater Notice of Intent (NOI) Information

NOI No. UTR UTR397985 Permit issued to: VHD LLC

To obtain your NOI permit, please visit: cdx.epa.gov. You will create a log in and then access the Storm Water Permit Issuance System. There is a $150 NOI fee, paid directly to the state when you file your permit. For SWPPP templates, visit construction.stormwater.utah.gov.

Property owner and contractor shall have responsibility to determine grades, and final placement and elevations of footings/foundations. Property owner and contractor shall be responsible for compliance with all state, national and local building codes and ordinances.

Initial JW **Name** Jessica Williamson/VHD LLC

Approval by the city of any application submittal or paperwork does not alleviate the owners from their responsibility to understand and conform to local, state and federal laws. Providence City's approval is not intended to and cannot be construed to allow any laws to be violated.

Initial JW

By signing this document, you agree that Providence City will bill you for any and all professional firm fees as they arise throughout the approval process. This is in addition to application fees. All subdivisions require engineering review throughout the approval process, such as but not limited to reviews of development agreements, construction drawings, preliminary and final plats, and inspections. These services are billed by our city engineer at an hourly rate. Some subdivision applications may also require legal review. Other applications, such as but not limited to conditional uses, may also require engineering and/or legal review at the City's discretion. You agree to reimburse the City for all such costs, whether or not you were forewarned about such costs, and that the City cannot predict all situations in which professional services may be required in order to process your application. Initial JW

All Applicants Must Read the Following Before Signing This Application

The granting of a zoning permit does not override any federal, state, or local building code or authorize any individual to violate any local law or ordinance. Approval of this permit does not constitute a representation by the City that it will be liable for any issues arising from the construction of homes and other structures in a Sensitive or Hazard Area. It is the responsibility of the property owner to comply with all relevant local, state, and federal laws and regulations, including but not limited to Providence City Code 10-5 outlined below:

Sensitive and Hazard Areas:

1. JURISDICTIONAL WETLANDS: As Defined by the US Army Corps of Engineers
2. STEEP SLOPES: Where the rise or fall of the land is equal to or exceeds 30% over a horizontal distance of 50 feet or greater measured perpendicular to the contour lines.
3. NATURAL WATERWAYS OR OPEN WATER: Including but not limited to: rivers, creeks, or streams. Identified as those areas where surface waters flow sufficiently to produce a defined channel or bed.
4. FLOODPLAINS: See definitions in Chapter 16 Section 3 of this Title.
5. CRUCIAL WILDLIFE HABITAT AREAS: As identified by the State Division of Wildlife Resources (DWR)

6. GEOLOGICAL HAZARD AREAS: Earthquake fault lines or areas prone to debris flows, landslides, high or extreme liquefaction potential, and rock falls as identified by the US Geological Survey (USGS)
7. WILDFIRE HAZARD AREAS: Areas of the City designated as having moderate to extreme potential for wildfire hazards as identified by the City.
8. HAZARD WATER TABLE AREA: An area where potential ground water levels may occur within 12 feet of the natural grade.

By submitting this application, I affirm that I have read and understand the Title 10 Chapter 5 requirements for construction on property in the Sensitive or Hazard Area. I understand that the City is not liable for any issues which may arise because of the construction of structures in the Sensitive or Hazard Areas of the City. The property owner and their agents assume all liability for placing structures in this area of the City. I hereby certify that I am the property owner or authorized agent and I have read and examined this application and understand that the City has no liability. I accept responsibility for all soils and hazardous conditions on the site.

I declare under penalty of perjury that I am making this application of my own free will and choice and that the statements, answers, and documents submitted in connection with this application are true and correct to the best of my knowledge.

Jessica Williamson	Jessica Williamson/VHD LLC	6/4/21
Signature of Applicant	Printed Name	Date

PROVIDENCE CITY BUILDING DIVISION CONSTRUCTION POLICIES

(Required for all zoning permit applications)

1. **Zoning requirements**
   a. Site plan required to be on site at footing inspection
   b. Property corners to be marked and staked for inspection
2. **Lot ID**
   a. Posting of a lot ID sign is required during construction for inspections and emergency services. This sign is provided by the City and shall be posted by the first scheduled inspection and visible from the street.
3. **Toilets**
   a. The IPC and OSHA require a toilet on site during construction and in place prior to the first inspection. This has to be accessible to all workers in the area and requires the cooperation of all.
4. **Water Meter**
   a. Unauthorized use of City water will result in a fine and a stop work order on the property.
   b. Meter and sewer clean outs are not allowed to be encased or surrounded in concrete. (Contact the Public Works for the required specs.) The moving cost will be the responsibility of the owner.
5. **Streets/Sidewalks**
   a. No material will be allowed on public streets or sidewalks. "Material" is defined as construction products, or any size or dimension of aggregate. (See Providence City's specs.)
   b. Dirt piled over curb and sidewalk requires a minimum 4" pipe installed to allow drainage to the gutter. This temporary (180 days) blockage to the sidewalk requires safety tape or cones to divert traffic.
   c. All sidewalks, curbs, gutters, and streets associated with the property are to be kept clean during construction with a final cleaning required prior to final occupancy.
   d. Construction sites should be kept clean and all debris contained to that site.
6. **Elevations**
   a. I accept responsibility for all the soils and hazard conditions of the site. Approval of this permit does not constitute a representation by the City that the building at any specified elevation will solve any ground water, slope or hazard condition. The solution to this problem is the sole responsibility of the permit applicant, agent, or property owner.
7. **Final Occupancy**
   a. Occupying the building prior to final occupancy will result in revocation of the $500 power bond. After the initial inspection, the Building Official will determine whether any furniture can be moved into the house or garage.
8. **Temporary Occupancy**
   a. Will only be issued with special permission. Temporary permits will expire after 30 days of issue and the construction bond will be forfeited if work is not completed
9. **Permits**
   a. Plan review and permit fees are good for 180 days. Only the permit portion will be refunded, after a written letter of request is received. No fees will be refunded after this period has expired.

By signing below, I state that I have read and agree to the above terms and understand that I am the responsible party for the information contained on this sheet.

Jessica Williamson	Jessica Williamson/VHD LLC		6/4/21
Signature	Printed Name	On Behalf Of	Date

APPLICATION FOR CONNECTION TO THE PROVIDENCE CITY WATER SYSTEM

(Required only for applications for new home/commercial construction)

I hereby apply to Providence City for permission to connect my residence at 536 N 130 E to the Providence City water system and receive water services thereby provided. I agree to the following:

1. Providence City will install a water meter for the premises when the service line and meter set is in and has been accepted by the City.
   a. This acceptance is also contingent upon any changes or alteration to grade of landscape made by the homeowner/builder around the meter set. These changes must also meet Providence City specifications.
2. If a homeowner/builder is required to make a connection to the Providence City water system, all costs of this connection, service line, meter set and permits shall be paid by the homeowner/builder.
   a. Applicant shall purchase an excavation permit.
   b. Applicant shall post an $800 bond with the City, $750 refundable upon satisfactory acceptance by the City.
   c. Installation shall follow all guidelines of Providence City standard specifications (a copy is available for purchase at the City Office).
   d. All work shall be inspected by the City. If not approved, the applicant will have the problems rectified at his expense to meet Providence City requirements.
   e. Any connection and service line made from the City's main line up to and including the meter shall remain the property of the City, and Providence City shall have access thereto at all times.
      1. Cost for installation and maintenance of service lines, including homeowner connection to the meter setter is the sole responsibility of the homeowner/builder.
3. The applicant understands that the billing for water service begins once the meter is set. The time frame for setting of the water meter needs to be scheduled with Providence City Water Dept.
   a. Providence City shall have 30 days in which to install the requested water meter after payment of all fees and satisfactory inspections have been completed. Providence City Water Dept. reserves the right to evaluate the feasibility of a water service or water meter being installed between November 1 and April 1.
4. No water meter set shall be installed in a sidewalk, driveway or encased in concrete. Providence City shall have a minimum of an 18 inch unobstructed radius from the center of the lid and free access to the lines and meters installed under this agreement at reasonable times, through applicant's property if necessary.
5. Sprinkler systems or other possible contamination sources on the homeowner's property that connect to the City water system shall have approved backflow assemblies installed and registered with the City.
6. Applicant hereby agrees to abide by all rules, regulations, resolutions or ordinances enacted or adopted by the governing body applicable to the Providence City Water System.

Jessica Williamson	Jessica Williamson/VHD LLC		6/4/21
Signature	Printed Name	On Behalf Of	Date

APPLICATION FOR CONNECTION TO THE PROVIDENCE CITY SEWER SYSTEM
(Required only for applications for new home/commercial construction)

I hereby apply to Providence City for permission to connect my premises at 536 N 130 E to the Providence City sewer system. I agree to the following:

1. Providence City will allow the applicant to connect to the sewer trunk line or the service line extension, if one exists.
2. Applicant will obtain an excavation permit and comply with it if connection to the trunk line is required.
   a. Applicant shall purchase an excavation permit.
   b. Applicant shall post an $800 bond with the City, $750 refundable upon satisfactory acceptance by the City.
   c. Installation shall follow all guidelines of Providence City standard specifications (a copy is available for purchase at the City Office).
   d. All work shall be inspected by the City. If not approved, the applicant will have the problems rectified at his expense to meet Providence City requirements.
   e. Applicant will bear all the costs associated with the permits, excavation, pipe, installation, backfill, compaction, and repair of curbs, sidewalks and streets.
   f. Applicant shall use the mechanical connection apparatus approved by the Public Works Director.
   g. All materials used that are placed on City property shall become the property of Providence City.
   h. Applicant shall call for a City inspector 48 hours prior to any work beginning on a City right-of-way. All work shall be inspected prior to backfill.
3. Before making connection with the sewer system, applicant shall cause the plumbing upon the premises to be inspected by the municipality, and if it is not approved, it shall be rectified at the applicant's expense.
4. The Providence City Water Department reserves the right to evaluate the feasibility of installing a sewer connection between November 1 and April 1.
5. Providence City shall maintain all sewer trunk lines in the City, but it shall be the responsibility of the home owner to maintain the line on the premises and to the junction with the sewer trunk line, commonly known as the "Y".
6. Applicant agrees to abide by all rules, regulations, resolutions or ordinances enacted or adopted by the governing body applicable to the Providence City Sewer System.

Jessica Williamson	Jessica Williamson/VHD LLC		6/4/21
Signature	Printed Name	On Behalf Of	Date

2020-3436

VINEYARD PHASE 3, 3B, 3C, 3D, 3E

FINAL PLAT

PART OF THE SOUTHWEST QUARTER OF SECTION 2
AND SOUTHEAST QUARTER OF SECTION 3
TOWNSHIP 11 NORTH, RANGE 1 EAST
SALT LAKE BASELINE AND MERIDIAN
PROVIDENCE, UTAH

SCALE: 1"=40' (24x36 PLAN SET)

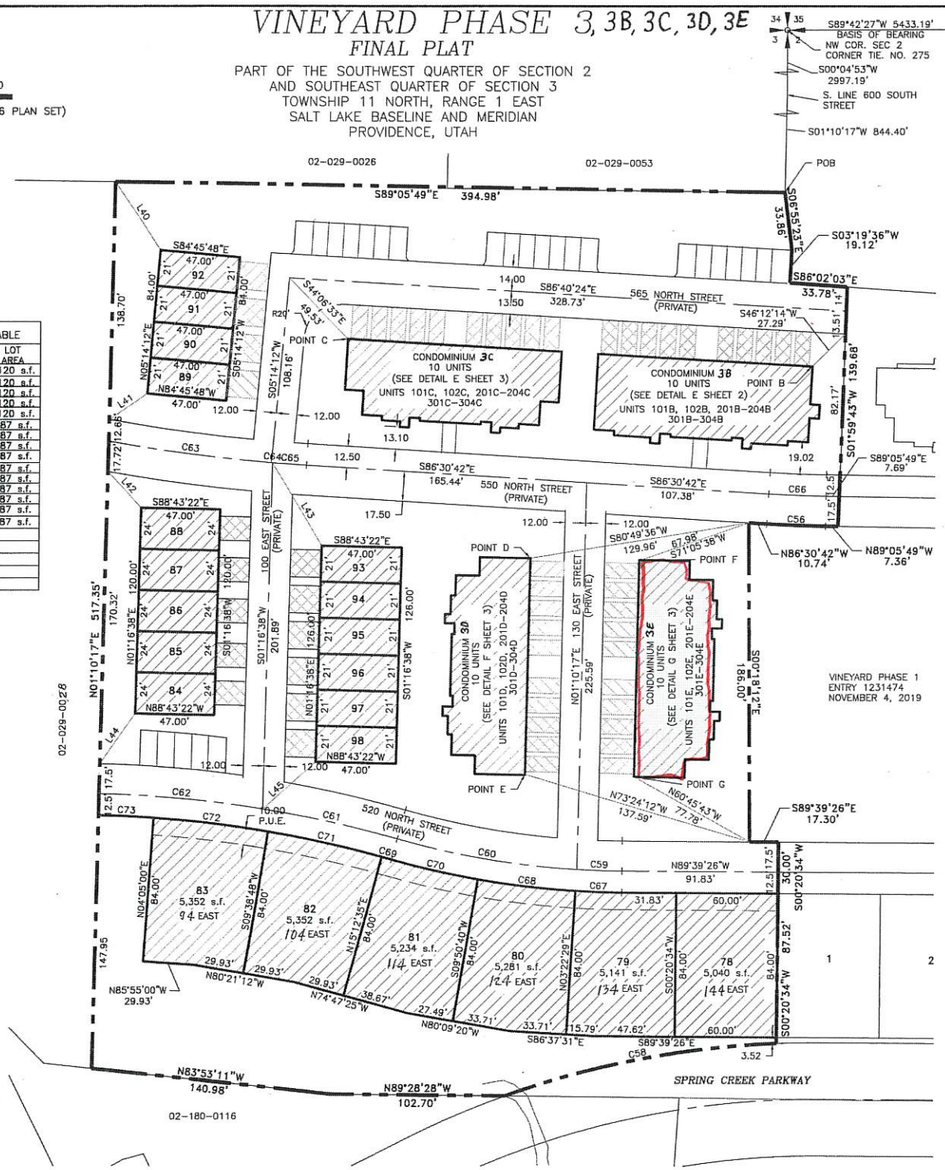

ADDRESS/LOT AREA TABLE		
LOT	ADDRESS	LOT AREA
84	539 NORTH 100 EAST	1120 s.f.
85	537 NORTH 100 EAST	1120 s.f.
86	541 NORTH 100 EAST	1120 s.f.
87	545 NORTH 100 EAST	1120 s.f.
88	549 NORTH 100 EAST	1120 s.f.
89	559 NORTH 100 EAST	987 s.f.
90	559 NORTH 100 EAST	987 s.f.
91	569 NORTH 100 EAST	987 s.f.
92	569 NORTH 100 EAST	987 s.f.
93	549 NORTH 100 EAST	987 s.f.
94	544 NORTH 100 EAST	987 s.f.
95	538 NORTH 100 EAST	987 s.f.
96	534 NORTH 100 EAST	987 s.f.
97	532 NORTH 100 EAST	987 s.f.
98	528 NORTH 100 EAST	987 s.f.
CONDOMINIUMS		
3B	139 EAST 550 NORTH	
3C	115 EAST 550 NORTH	
3D	537 NORTH 130 EAST	
3E	536 NORTH 130 EAST	

LEGEND

- PRIVATE
- PRIVATE COMMON AREA (EXCEPT SPRING CREEK PARKWAY AND 170 EAST STREET WHICH ARE DEDICATED PUBLIC RIGHT OF WAYS) (SEE NOTE 7)
- LIMITED COMMON AREA RESERVED FOR UNIT(S) (SEE NOTE 6)
- EASEMENT AS NOTED

CURVE TABLE					
CURVE	LENGTH	RADIUS	DELTA ANGLE	CHORD BEARING	CHORD LENGTH
C56	34.63	767.50	2°35'07"	S87°48'15"E	34.63
C58	162.93	533.00	17°30'51"	S79°03'13"W	162.29
C59	26.37	500.00	3°01'19"	S88°08'47"E	26.37
C60	107.60	500.00	12°19'47"	S80°28'14"E	107.39
C61	80.64	712.50	6°29'04"	N77°32'52"W	80.59
C62	97.23	712.50	7°49'08"	N84°41'58"W	97.15
C63	97.01	1000.00	5°33'30"	S82°33'26"E	96.97
C64	0.89	1000.00	0°03'03"	S85°21'42"E	0.89
C65	19.63	1000.00	1°07'28"	S85°56'57"E	19.63
C66	33.84	750.00	2°35'07"	S87°48'15"E	33.84
C67	27.12	512.50	3°01'55"	S88°08'29"E	27.12
C68	57.87	512.50	6°28'11"	S83°23'26"E	57.84
C69	5.92	700.00	0°29'05"	N74°32'52"W	5.92
C70	52.33	512.50	5°51'00"	S77°13'50"E	52.30
C71	67.97	700.00	5°33'48"	N77°34'19"W	67.94
C72	67.97	700.00	5°33'48"	N83°08'06"W	67.94
C73	32.84	700.00	2°41'17"	N87°15'39"W	32.84

LINE TABLE		
LINE	LENGTH	BEARING
L40	48.19	S34°13'44"E
L41	26.96	N55°43'28"E
L42	28.91	S43°13'24"E
L43	56.36	S30°53'09"E
L44	35.78	N35°09'19"E
L45	41.16	S48°04'03"W

SURVEYOR'S CERTIFICATE

I, Brian G. Lyon, a Registered Land Surveyor, hold Certificate No. 275617, as prescribed by the laws of the State of Utah, and do hereby certify that by authority of the owners, I have made a survey of the tract of land shown on this plat, which is accurately described therewith, and have subdivided said tract of land into lots and streets to be hereafter known as VINEYARD, PHASE 3, and that the same has been surveyed and staked on the ground as shown on this plat.

Signed on this 2 day of Dec., 2020.

PROFESSIONAL LAND SURVEYOR 275617 BRIAN G. LYON 12-2-20 STATE OF UTAH

NOTES

1. The developer shall meet Providence City Code Title 8 Chapter 1, Section 21.
   Indoor use: 67 Residences x 0.45 ac-ft = 30.15 ac-ft
   Outdoor use: 2.20 acres x 64% x 4 = 5.63 ac-ft
2. 5/8" rebar with cap will be set at all rear and interior property corners. Curb pins will be set at the intersection of the lot line with the curbing once it is placed.
3. All lots have an adequate buildable envelope with regards to hazardous slope, building, water and zoning setback.
4. The City will not issue any building permit for any lot until minimum improvements, as specified in Section 11-5-2 of the City code are complete.
5. There are no know Sensitive lands as defined in Providence Code 10-5-2.
6. All driveways, patios, decks and balconies as shown on each unit contained within the project are considered limited common areas. They are set aside and reserved for the use of the respective unit to which they are attached and/or appurtenant.
7. All other areas contained within the project, but not shown with diagonal stripes or shading or public streets are considered common area, including parking, private streets, storm water detention and drainage easement area.
8. All common areas and limited common areas are considered to be an easement for all public utilities, irrigation and drainage purposes. This includes the ingress/egress area.
9. All expenses involving the necessary improvements or extensions for a culinary water system, sanitary sewer system, gas service, electrical service, telephone service, cable television service, grading and landscaping, storm drainage systems, curb and gutters, fire hydrants, pavement, sidewalks, signage, street lighting and other improvements shall be paid for by the subdivider.
10. With Exception of those areas under private ownership, the property is subject to a blanket easement over, across, above, and under it for ingress, egress, installation, maintenance, repair, and replacement of utilities exclusively servicing the property. Utilities include, without limitation, water, sewer, gas, telephone, and electricity with exception of those areas under private ownership.
11. There is a 10 foot Public Utility Easement (P.U.E.) along all single family lot frontages.

LEGAL DESCRIPTION

Part of the Southwest Quarter of Section 2 and Southeast Quarter of Section 3, Township 11 North, Range 1 East of the Salt Lake Meridian described as follows:

Commencing at the Northeast Corner of Section 2, Township 11 North, Range 1 East of the Salt Lake Meridian monumented with a Cache County Brass Cap, thence S89°42'27"W 5433.19 feet to the Northwest Corner of Section 2; thence S00°04'53"W 2997.19 feet to a point on the south right of way line of 600 South Street; thence S01°10'17"W 844.40 feet along the east line of South Fields Subdivision to the POINT OF BEGINNING and running

thence S 06°55'23" E 33.86 feet; thence S 03°19'36" W 19.12 feet;
thence S 86°02'03" E 33.78 feet to the boundary of Vineyard, Phase 1;
thence along the boundary of Vineyard, Phase 1 the next nine courses:
1) thence S 01°59'43" W 139.68 feet; 2) thence N 89°05'49" W 7.36 feet;
3) thence Westerly, 34.63 feet along a curve to the right having a radius of 767.50 feet, a central angle of 02°35'07" and a chord that bears N 87°48'15" W 34.63 feet;
4) thence N 86°30'42" W 10.74 feet; 5) thence S 00°18'12" E 186.00 feet;
6) thence S 89°39'26" E 17.30 feet; 7) thence S 00°20'34" W 30.00 feet to the south right of way line of 520 North Street;
8) thence S 00°30'34" W 87.52 feet;
9) thence Westerly, a distance of 162.93 feet along a non tangent curve to the left of which the radius point lies S 02°11'21" E, with a radius of 533.00 feet, having a central angle of 17°30'51" and a chord that bears S 79°03'13" W 162.29 feet;
thence N 89°28'28" W 102.70 feet; thence N 83°53'11" W 140.98 feet;
thence N 01°10'17" E 517.35 feet; thence S 89°05'49" E 394.98 feet to the point of beginning, containing 4.789 acres, more or less.

OWNERS DEDICATION

Know all by these presents that we the undersigned owners of the above-described tract of land, having caused the same to be subdivided into single family dwelling lots, townhome lots, streets and common areas to be hereafter know as VINEYARD, PHASE 3, do hereby dedicate for the perpetual use of the owners of _____ all areas shown as private streets and common areas on this plat , subject to declarations of covenants, conditions and restrictions for the project which will be recorded in the Office of the County Recorder of Cache County, Utah, concurrently with the recording of this plat. The undersigned further consents to the recordation of this plat in accordance with Utah State Law. We also dedicate easements as shown hereon to the public for the installation and maintenance of utilities. Also hereby convey to any and all public utility companies a perpetual non-exclusive easement over the public utility easements shown on this plat, the same to be used for the installation maintenance, and operation of utility lines and facilities. Furthermore, we incorporate all notes and restrictions as listed hereon.
A) Public utilities, and drainage easements: Grant and dedicate a perpetual right and easement over, upon and under the lands designated on the plat as public utility, drainage easements, the same to be used for the installation, maintenance and operation of public utility service lines, storm drainage facilities whichever is applicable as may be authorized by Providence City, Utah with no buildings or structures being erected within such easements.
In witness whereof the undersigned have hereunto set their signatures this 3 day of DECEMBER 2020.

Ridgeview Park, LLC
Jeff Jackson, Managing Member

LIMITED LIABILITY COMPANY ACKNOWLEDGEMENT

STATE OF UTAH
COUNTY OF Cache } ss

On this 3 day of December, in the year 2020, before me Shama Heaps a notary public, personally appeared Jeff Jackson, Manager Member of Ridgeview Park, LLC, proved on the basis of satisfactory evidence to be the person whose name is subscribed to this document, and acknowledged that said document was signed by him in behalf of said Ridgeview Park, LLC by authority of its bylaws.
Notary Public Signature: Shama Heaps
Notary Public Full Name: Shama Heaps
Commission Number: 715196
My Commission Expires: 11/15/2024
A Notary Public Commissioned in Utah

SHAMA KACIE HEAPS
NOTARY PUBLIC - STATE OF UTAH
My Comm. Exp 11/15/2024
Commission # 715196

LAND USE AUTHORITY APPROVAL

APPROVED THIS _____ DAY OF _____, 2020
BY THE PROVIDENCE LAND USE AUTHORITY

MAYOR APPROVAL

APPROVED THIS 4th DAY OF December
2020 BY THE PROVIDENCE CITY MAYOR
PROVIDENCE CITY MAYOR

CITY ENGINEER APPROVAL

APPROVED THIS 3rd DAY OF December
2020 BY THE PROVIDENCE CITY ENGINEER
PROVIDENCE CITY ENGINEER

COUNTY RECORDER'S NO.

State of Utah, County of Cache, recorded and filed at the request of OWNER
Date 4 DEC 2020 Time 2:16 pm Fee 272.00
Entry 1268743
Index 2020-3436
Filed in: File of plats
Michael L. Gleave
County Recorder

PLANNING COMMISSION APPROVAL

APPROVED BY THE CITY OF PROVIDENCE PLANNING COMMISSION COMMISSION THIS _____ DAY OF _____ 2020, A.D.
CHAIRMAN, PLANNING COMMISSION

CITY ATTORNEY APPROVAL

APPROVED THIS 4TH DAY OF Dec
2020 BY THE PROVIDENCE CITY ATTORNEY
PROVIDENCE CITY ATTORNEY

UTILITIES APPROVAL

Each of the utility companies below state that they have reviewed the plat, that they approve the plat as it relates to their particular company, that they are in agreement with placing all of their utilities underground within the right-of-way as shown on the plans and are willing to provide the needed service for the development.

CITY'S CULINARY WATER AND SANITARY SEWER REPRESENTATIVE

ROCKY MNTN POWER REPRESENATIVE

DOMINION ENERGY REPRESENTATIVE

COMCAST CABLE REPRESENTATIVE

CENTURY LINK REPRESENATIVE

Dominion Energy Utah – Note with NO existing natural gas easements

Questar Gas Company, dba Dominion Energy Utah, hereby approves this plat solely for the purposes of confirming that the plat contains public utility easements. Dominion Energy Utah may require additional easements in order to serve this development. This approval does not constitute abrogation or waiver of any other existing rights, obligations or liabilities including prescriptive rights and other rights, obligations or liabilities provided by law or equity. This approval does not constitute a acceptance, approval or acknowledgement of any terms contained in the plat, including those set forth in the Owner Dedication or in the Notes, and does not constitute a guarantee of particular terms or conditions of natural gas service. For further information please contact Dominion Energy Utah's Right-of-Way Department at 801-324-5392

QUESTAR GAS COMPANY
dba DOMINION ENERGY UTAH
Approved this 3 day of Dec 20 20
By Kristi Sidell
Title Ele Construction

RECEIVED
JUN 04 2021
By

Groundwater Note:
A geotechnical study was performed on this parcel by A Cache Corp. prior to the development of this subdivision. In that report, areas of potential high ground water were encountered. The full geotechnical report is available in the Providence City Public Works office. The report suggested installing a land drain to mitigate the high water in order to make installing basements feasible in this development. A land drain will be installed with the utility improvements prior to any home construction as suggested in the report, and as required by Providence City. Individual footing drains are to be installed with each home, and connected to the land drain.

SETBACKS

Setbacks (Single Family Detached, Duplex)
Front Yard (street garage acces): 20 feet min./35 feet max.
Front Yard (alley garage access): 10 feet min.
Rear Yard: 10 feet min.
Side Yard: 7.5 feet min.
Corner Lot: 15 feet min. on side adjacent to street

Setbacks (Single Family Attached, Apartment)
No front or rear building setback is in place for single family attached and apartment housing, provided that the development's open space is integrated throughout the project so that each group of single family attached dwelling units and each building of apartments has a minimum of 10' of landscaping open space on all sides, and said landscaping being calculated from the front/rear plane of the dwelling unit or exterior wall of the apartment building, with the exception of one side of single-family attached which may be needed for alley garage access. Buildings whose front plan faces the front plane of another building shall have a minimum of 20' separation between the building's front planes.

ALLIANCE CONSULTING ENGINEERS
150 EAST 200 NORTH SUITE P
LOGAN, UTAH 84321
(435) 755-0343
alliancelogan@yahoo.com

OWNER:
RIDGEVIEW PARK, LLC
50 EAST 2300 N SUITE 101
NORTH LOGAN, UTAH 84341
(435)752-1480

No.	REVISIONS / SUBMISSIONS	DATE

REVISED : DRAWN :
CAD FILE : PROJECT NO. :

PROJECT TITLE: VINEYARD, PHASE 3
PART OF THE SOUTHWEST QUARTER OF SECTION 2 AND SOUTHEAST QUARTER OF SECTION 3 TOWNSHIP 11 NORTH, RANGE 1 EAST SALT LAKE BASELINE AND MERIDIAN PROVIDENCE, UTAH

DRAWING TITLE: FINAL PLAT

DATE : DEC.2020
DRAWING No. 1
1 of 3

VINEYARD PHASE 3
GRADING/DRAINAGE PLAN

0 40 80

SCALE: 1"= 40' (24x36 PLAN SET)
SCALE: 1"= 80' (11x17 PLAN SET)

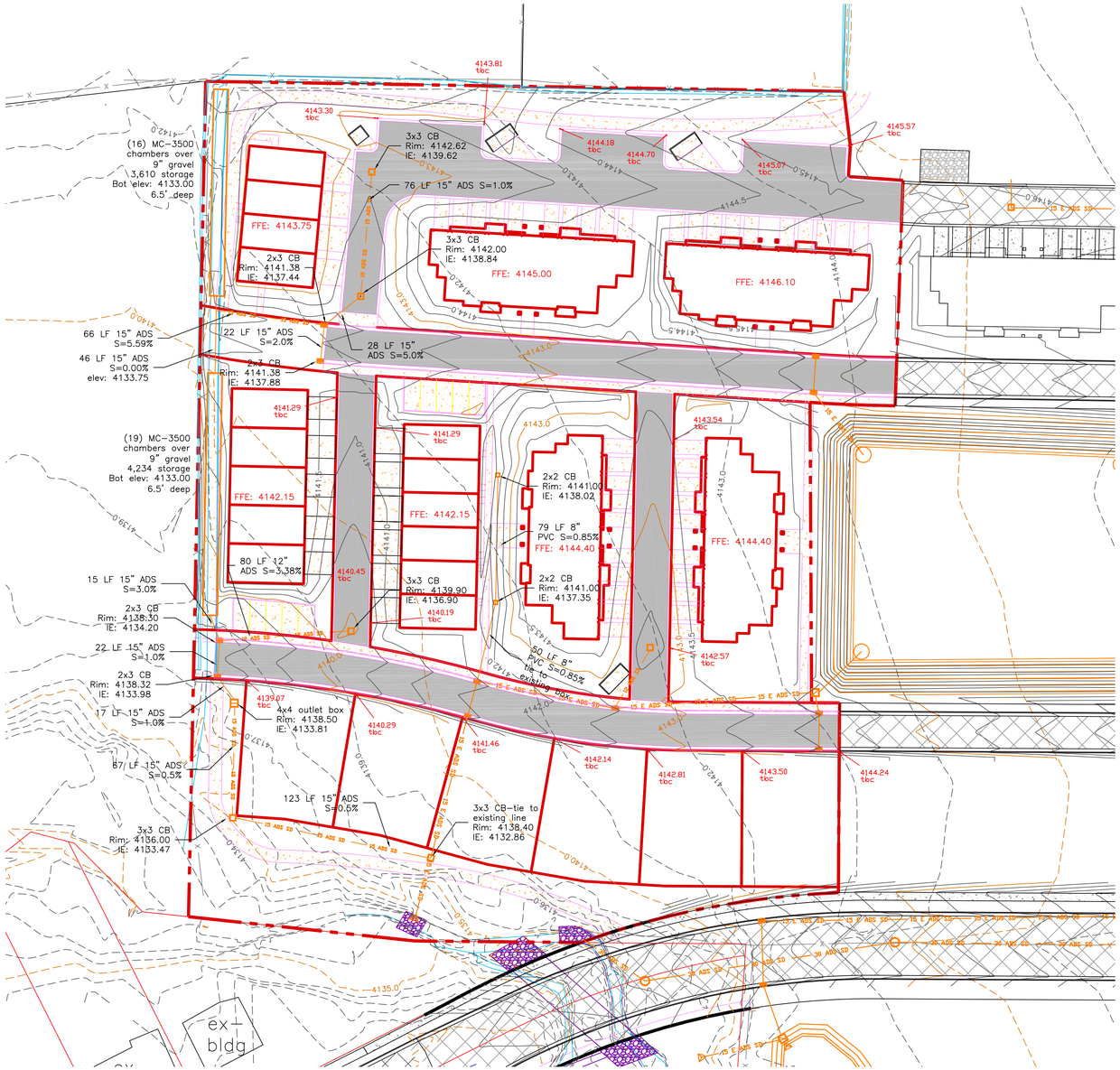

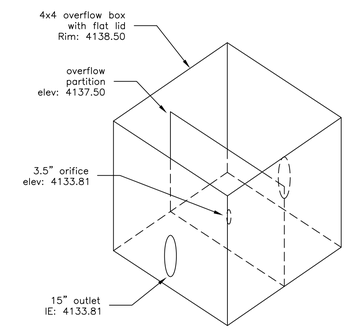

OVERFLOW BOX DETAIL

Pond C

Drainage Area to Pond:				3.43	acres					
Weighted 'C' value for Pond Drainage Area:				0.50						
Allowable Infiltration Rate:				1.0	inches/hr =	0.0014	ft/min	per NRCS		
Pond Bottom Area:			20	ft x	148	ft =		2960	sq. ft.	
Allowable Discharge Rate:				0.1	cfs/acre					

100-Year Return Period

Interval (min)	Precip.* Intensity (in/hr)	Precip. Depth (in)	Area (ac)	C Value	CxAx3630 (ft^3/in)	Accum. Inflow (ft3/min)	Allowable Discharge (ft^3/min)	Accum. Discharge (ft^3)	Required Storage (ft^3)	(ac-ft)
5	5.53	0.46	3.43	0.5	6225	2869	25	123	2745	0.06
10	4.21	0.70	3.43	0.5	6225	4368	25	247	4121	0.09
15	3.48	0.87	3.43	0.5	6225	5422	25	370	5052	0.12
30	2.34	1.17	3.43	0.5	6225	7284	25	741	6543	0.15
60	1.45	1.45	3.43	0.5	6225	9027	25	1481	7545	0.17
120	0.85	1.69	3.43	0.5	6225	10521	25	2963	7558	0.17
180	0.60	1.80	3.43	0.5	6225	11206	25	4444	6761	0.16
360	0.37	2.19	3.43	0.5	6225	13634	25	8889	4745	0.11
720	0.23	2.75	3.43	0.5	6225	17108	25	17778	0	0.00
1440	0.15	3.48	3.43	0.5	6225	21665	25	35555	0	0.00

Values taken from NOAA

LEGEND

- 15 ADS SD — NEW STORM AS NOTED
- EXISTING MJR CONTOUR (5')
- EXISTING MNR CONTOUR (1')
- PROPOSED MJR CONTOUR (2.5')
- PROPOSED MNR CONTOUR (0.5')
- EXISTING ASPHALT
- PROPOSED ASPHALT

REGISTERED PROFESSIONAL ENGINEER
NO. 368590
ADAM T. MACKELPRANG
8-5-2020
STATE OF UTAH

ALLIANCE CONSULTING ENGINEERS
150 EAST 200 NORTH SUITE P
LOGAN, UTAH 84321
(435)755-5121
alliancelogan@yahoo.com

OWNER:
RIDGEVIEW PARK, LLC
50 EAST 2500 N SUITE 101
NORTH LOGAN, UTAH 84341
(435)752-1480

No.	REVISIONS/ SUBMISSIONS	DATE

DRAWN :
REVIEWED :
PROJECT NO. :
CAD FILE :

PROJECT TITLE
VINEYARD PHASE 3
PART OF THE SOUTHWEST QUARTER OF SECTION 2 AND SOUTHEAST QUARTER OF SECTION 3 TOWNSHIP 11 NORTH, RANGE 1 EAST SALT LAKE BASELINE AND MERIDIAN PROVIDENCE, UTAH

DRAWING TITLE
GRADING/DRAINAGE PLAN

DATE : OCT,2019
DRAWING No.
4

Fossil Beige

SW7005

Pure White

Stucco

A AO.2 **NORTH ELEVATION (BLDG D)**
SOUTH ELEVATION (BLDG E) SCALE: 1/8"=1'-0"

B AO.2 **SOUTH ELEVATION (BLDG D)**
NORTH ELEVATION (BLDG E) SCALE: 1/8"=1'-0"

C AO.2 **EAST ELEVATION (BLDG D)**
WEST ELEVATION (BLDG E) SCALE: 1/8"=1'-0"

D AO.2 **WEST ELEVATION (BLDG D)**
EAST ELEVATION (BLDG E) SCALE: 1/8"=1'-0"

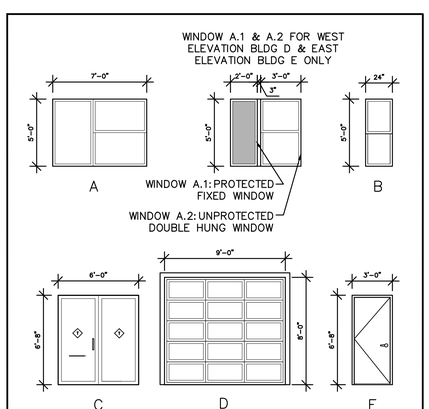

1 **OPENINGS DETAIL** N.T.S.

NOTES:

– ALL OPENINGS ON WEST ELEVATION BLDG D & EAST ELEVATION BLDG E, WITH THE EXCEPTION OF WINDOW A.2 (DOUBLE HUNG), SHALL BE FIRE PROTECTED IN ACCORDANCE WITH IBC SECTION 716.3, SEE WINDOW SCHEDULE NOTE 5/A1.8 & OPENINGS DETAIL 1/A0.2

BUILDING D (3B)

NORTH WALL
FIRE SEPARATION DISTANCE 30' OR GREATER – UNPROTECTED OPENINGS ALLOWED NO LIMIT – NONSPRINKLERED

SOUTH WALL
FIRE SEPARATION DISTANCE 30' OR GREATER – UNPROTECTED OPENINGS ALLOWED NO LIMIT – NONSPRINKLERED

EAST WALL
FIRE SEPARATION DISTANCE 30' OR GREATER – UNPROTECTED OPENINGS ALLOWED NO LIMIT – NONSPRINKLERED

WEST WALL
FIRE SEPARATION DISTANCE 15' TO LESS THAN 20' – UNPROTECTED OPENINGS ALLOWED 25% – NONSPRINKLERED

NORTH WALL – LEVEL 1		43'-4"		10'-9"	467	
	LENGTH	HEIGHT	SQ. FT.	NUMBER	TOTAL SQ. FT.	
WINDOW TYPE B	2'-0"	5'-0"	10 S.F.	4	40 S.F.	
DOOR TYPE E	3'-0"	6'-8"	20 S.F.	1	20 S.F.	
TOTAL					60 S.F.	12.8%
NORTH WALL – LEVELS 2–3		43'-4"		10'-9"	467	
	LENGTH	HEIGHT	SQ. FT.	NUMBER	TOTAL SQ. FT.	
WINDOW TYPE B	2'-0"	5'-0"	10 S.F.	4	40 S.F.	.08%
SOUTH WALL – LEVEL 1		43'-4"		10'-9"	467	
	LENGTH	HEIGHT	SQ. FT.	NUMBER	TOTAL SQ. FT.	
WINDOW TYPE B	2'-0"	5'-0"	10 S.F.	4	40 S.F.	.
DOOR TYPE E	3'-0"	6'-8"	20 S.F.	1	20 S.F.	
TOTAL					60 S.F.	12.8%
SOUTH WALL – LEVEL 2 & 3		43'-4"		10'-9"	467	
	LENGTH	HEIGHT	SQ. FT.	NUMBER	TOTAL SQ. FT.	
WINDOW TYPE B	2'-0"	5'-0"	10 S.F.	4	40 S.F.	.08%
		LENGTH		HEIGHT	SQUARE FEET	PERCENT
EAST WALL – LEVEL 1		126'-4"		11'-3"	1,418	
	LENGTH	HEIGHT	SQ. FT.	NUMBER	TOTAL SQ. FT.	
DOOR TYPE D	9'-0"	8'-0"	72 S.F.	10	720 S.F.	
BREEZEWAY OPENING	8'-9"	9'-7"	84 S.F.	1	84 S.F.	
TOTAL					804 S.F.	56.6%
EAST WALL–LEVELS 2&3 (EACH)		126'-4"		10'-9"	1,358	
	LENGTH	HEIGHT	SQ. FT.	NUMBER	TOTAL SQ. FT.	
WINDOW TYPE A	7'-0"	5'-0"	35 S.F.	8	280 S.F.	
DOOR TYPE C	6'-0"	6'-8"	40 S.F.	2	80 S.F.	
BREEZEWAY OPENING	8'-9"	9'-7"	84 S.F.	1	84 S.F.	
TOTAL					444 S.F.	32.6%
WEST WALL–LEVELS 1–3 (EACH)		104'-8"		10'-9"	1,128	
	LENGTH	HEIGHT	SQ. FT.	NUMBER	TOTAL SQ. FT.	
WINDOW TYPE A.1	2'-0"	5'-0"	10 S.F.	6	60 S.F.	
WINDOW TYPE A.2	3'-0"	5'-0"	15 S.F.	6	90 S.F.	
DOOR TYPE C	6'-0"	6'-8"	40 S.F.	2	80 S.F.	
BREEZEWAY OPENING	8'-9"	9'-7"	84 S.F.	1	84 S.F.	
TOTAL					314 S.F.	27.8%
EQUATION 7–2	(224/508) + (90/169) 0.44 + 0.53 = .97 ≤ 1			PROTECTED & UNPROTECTED OPENINGS ON WEST ELEVATION OF BUILDING PHASE D, SEE DETAIL D/A0.2 FOR MORE INFORMATION		

BUILDING E (3B)

NORTH WALL
FIRE SEPARATION DISTANCE 30' OR GREATER – UNPROTECTED OPENINGS ALLOWED NO LIMIT – NONSPRINKLERED

SOUTH WALL
FIRE SEPARATION DISTANCE 30' OR GREATER – UNPROTECTED OPENINGS ALLOWED NO LIMIT – NONSPRINKLERED

EAST WALL
FIRE SEPARATION DISTANCE 15' TO LESS THAN 20' – UNPROTECTED OPENINGS ALLOWED 25% – NONSPRINKLERED

WEST WALL
FIRE SEPARATION DISTANCE 30' OR GREATER – UNPROTECTED OPENINGS ALLOWED NO LIMIT – NONSPRINKLERED

NORTH WALL – LEVEL 1		43'-4"		10'-9"	467	
	LENGTH	HEIGHT	SQ. FT.	NUMBER	TOTAL SQ. FT.	
WINDOW TYPE B	2'-0"	5'-0"	10 S.F.	4	40 S.F.	
DOOR TYPE E	3'-0"	6'-8"	20 S.F.	1	20 S.F.	
TOTAL					60 S.F.	12.8%
NORTH WALL – LEVELS 2–3		43'-4"		10'-9"	467	
	LENGTH	HEIGHT	SQ. FT.	NUMBER	TOTAL SQ. FT.	
WINDOW TYPE B	2'-0"	5'-0"	10 S.F.	4	40 S.F.	.08%
SOUTH WALL – LEVEL 1		43'-4"		10'-9"	467	
	LENGTH	HEIGHT	SQ. FT.	NUMBER	TOTAL SQ. FT.	
WINDOW TYPE B	2'-0"	5'-0"	10 S.F.	4	40 S.F.	.
DOOR TYPE E	3'-0"	6'-8"	20 S.F.	1	20 S.F.	
TOTAL					60 S.F.	12.8%
SOUTH WALL – LEVEL 2 & 3		43'-4"		10'-9"	467	
	LENGTH	HEIGHT	SQ. FT.	NUMBER	TOTAL SQ. FT.	
WINDOW TYPE B	2'-0"	5'-0"	10 S.F.	4	40 S.F.	.08%
EAST WALL–LEVELS 1–3 (EACH)		104'-8"		10'-9"	1,128	
	LENGTH	HEIGHT	SQ. FT.	NUMBER	TOTAL SQ. FT.	
WINDOW TYPE A.1	2'-0"	5'-0"	10 S.F.	6	60 S.F.	
WINDOW TYPE A.2	3'-0"	5'-0"	15 S.F.	6	90 S.F.	
DOOR TYPE C	6'-0"	6'-8"	40 S.F.	2	80 S.F.	
BREEZEWAY OPENING	8'-9"	9'-7"	84 S.F.	1	84 S.F.	
TOTAL					314 S.F.	27.8%
EQUATION 7–2	(224/508) + (90/169) 0.44 + 0.53 = .97 ≤ 1			PROTECTED & UNPROTECTED OPENINGS ON EAST ELEVATION OF BUILDING PHASE E, SEE DETAIL D/A0.2 FOR MORE INFORMATION		
		LENGTH		HEIGHT	SQUARE FEET	PERCENT
WEST WALL – LEVEL 1		126'-4"		11'-3"	1,418	
	LENGTH	HEIGHT	SQ. FT.	NUMBER	TOTAL SQ. FT.	
DOOR TYPE D	9'-0"	8'-0"	72 S.F.	10	720 S.F.	
BREEZEWAY OPENING	8'-9"	9'-7"	84 S.F.	1	84 S.F.	
TOTAL					804 S.F.	56.6%
WEST WALL–LEVELS 2&3 (EACH)		126'-4"		10'-9"	1,358	
	LENGTH	HEIGHT	SQ. FT.	NUMBER	TOTAL SQ. FT.	
WINDOW TYPE A	7'-0"	5'-0"	35 S.F.	8	280 S.F.	
DOOR TYPE C	6'-0"	6'-8"	40 S.F.	2	80 S.F.	
BREEZEWAY OPENING	8'-9"	9'-7"	84 S.F.	1	84 S.F.	
TOTAL					444 S.F.	32.6%

SCHOLZ ARCHITECTS
ARCHITECTURE PLANNING INTERIOR DESIGN
1503 SOUTH 40 EAST STE. 230, PROVO, UT 84606
BUS: 801.373.2128 FAX: 801.373.2130 E-MAIL: kevinescholz-arch.com

PROVIDENCE VINEYARD - BUILDING D & E - 3B
PROVIDENCE UTAH
OPENING CALCULATIONS

Copyright © 2021 Scholz Architects. Concepts and drawings contained herein are the property of the architect and may not be reproduced or used for any purpose without the written consent of the architect.

PLOT SCALE: 1/8"=1'-0"
DATE: 11.6.20
JOB: #19-004
A0.2_PR-B3_OC
PW

ISSUES/REV:	DATE:

A0.2

PLANS ARE TO BE CONSIDERED NOT FOR CONSTRUCTION UNLESS SEAL AND SIGNATURE OF ARCHITECT ARE AFFIXED.

High Water Table Mitigating Strategies:

Land drain

Condos will be slab on grade, no basements.