## GENERAL NOTES AND SPECIFICATIONS

1. The materials and labor shown on these plans that are provided by Cleary Building Corp. are limited to those materials and labor as defined by the Cleary Building Corp. contract. Additional materials or accessories that are not being provided by Cleary Building Corp. may be shown on plans for context or building code compliance.

2. This building is designed in accordance with the following codes and specifications:
   2018 International Building Code (IBC)
   2018 Edition Of "National Design Specifications for Wood Construction"

   Use Group(s) Classification:——— S-1
   Building Use:——— Storage
   Type of Construction:——— Type VB
   Building Gross Square Footage:——— 4320 Sq. Ft.

   Building Design Loads:
   Design Truss Load:——— 29 PSF Total Load
   Design Snow Load:——— 21 PSF Ground Snow Load ($P_g$)
   20 PSF (for balanced roof snow load)
   Design Wind Speed:——— 115 MPH (EXP C)
   Seismic Use Group:——— I
   Seismic Design Category:——— D

   Maximum Considered Earthquake Ground Motion for:
   0.2 Second Spectral Response (Ss):——— 68.2%g
   1.0 Second Spectral Response (S1.0):——— 21.7%g

3. All lumber, unless noted otherwise, shall be S4S #2 SPF or better. All lumber embedded in the ground shall be treated with Chromated Copper Arsenate to a retention level of .60 lbs. per cubic foot.

4. Grading should be such that the surface water is drained away from the foundation. Minimum grade would be six inches of vertical drop per ten feet of horizontal away from the foundation (5%).

5. Fill used for concrete floor slab sub grade, if present, shall be reasonably graded granular material. Fill used in columns holes shall be the excavated soil unless noted otherwise. All fill shall be free from debris, stones over 4"ϕ and frozen material.

6. Electrical work is not a part of this drawing and shall be installed as per applicable codes.

7. Heating, ventilating, and air conditioning work is not a part of this drawing and shall be installed as per applicable codes.

8. Plumbing work is not a part of this drawing and shall be installed as per applicable codes.

9. All nails are to be threaded hardened steel unless otherwise noted.

10. This design is based on a building site with sand, silty sand, clayey sand, silty gravel, clayey gravel soil. As per the IBC building code and Referenced Table 1806.2, an assumed soil bearing design value of 2000 psf has been used in this design. If information is discovered before or during construction contrary to this, the building designer should be contacted.

**NOTE:**
This building, as depicted, must be constructed 10 feet or more from any and all lot lines and 20 feet or more from any other buildings on the same lot. See IBC code and/or the local building official for exceptions.

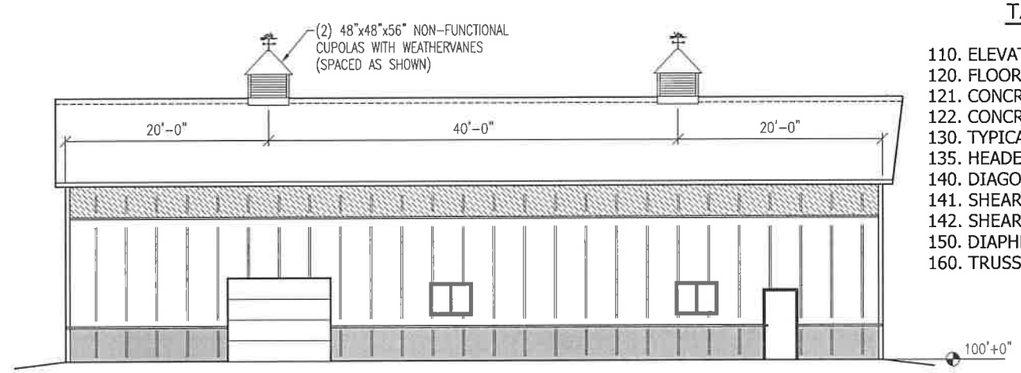


SOUTH ELEVATION

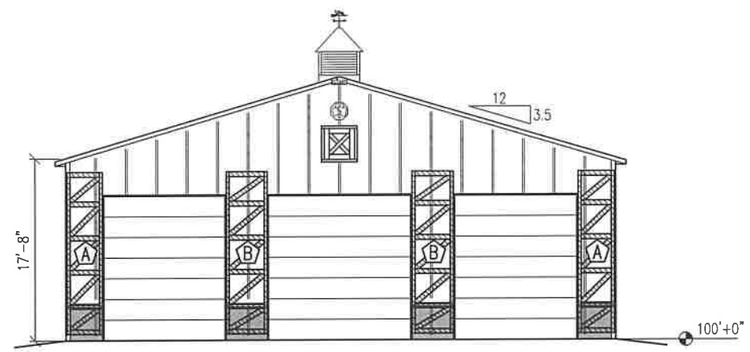


EAST ELEVATION

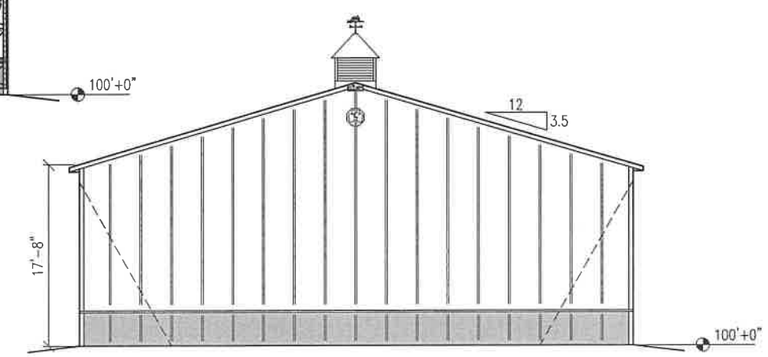


WEST ELEVATION

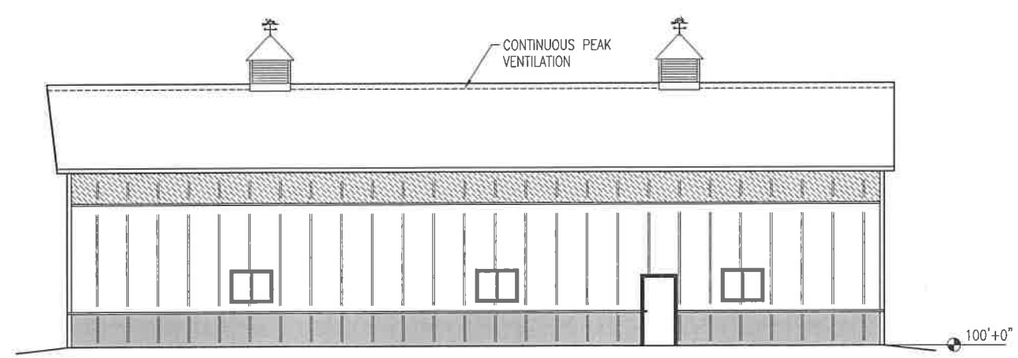


NORTH ELEVATION

## TABLE OF CONTENTS


110. ELEVATIONS
120. FLOOR PLAN
121. CONCRETE BRACKET LAYOUT PLAN
122. CONCRETE DETAILS
130. TYPICAL SECTION
135. HEADER DETAILS
140. DIAGONAL BRACING DETAILS
141. SHEAR TRUSS DETAILS A
142. SHEAR TRUSS DETAILS B
150. DIAPHRAGM ACTION & MISC. DETAILS
160. TRUSS DIAGRAMS



CLEARY BUILDING CORP.
190 PAOLI STREET / P.O. BOX 930220
VERONA, WI 53593 / (800) 373-5550


DRAWN BY: KPG
DATE DRAWN: 12/23/2020

PLAN REVISIONS:

| NUMBER | DATE | BY |
|---|---|---|
| 1 | 4/5/2021 | KPG |
| 2 | 4/23/21 | MW |
| 3 | | |
| 4 | | |

PROJECT NAME: BK TRUCKING - BRIAN BEDDO
PROJECT SITE ADDRESS: 1258 SOUTH MULBERRY DRIVE TOQUERVILLE, UTAH - WASHINGTON COUNTY
BUILDING SIZE: 54'-0"X80'-0"X17'-8"
SHEET NAME: ELEVATIONS

PROJECT NUMBER: 2020107394
SHEET NUMBER: 110
SHEET SCALE: NONE

PROFESSIONAL STRUCTURAL ENGINEER
No. 5181743
MATTHEW BRIAN LAWINGER
STATE OF UTAH
4/24/21


File Name and Path: I:\Commercl\1CAD FILES\2020\2020107394\2020107394-110-ELEV-2.dwg
Printed By: Michael Waldera Date Printed: 4/23/2021 9:27 AM

| COLUMNS | COLUMN SIZE | HOLE DEPTH | HOLE DIAMETER | FOOTING SIZE | NUMBER OF COLUMNS REQUIRED |
|---|---|---|---|---|---|
| (A) SIDEWALL | 3-PLY 2x8x17'-8" | --- | --- | ON CONCRETE SLAB (100'+0") | 17 |
| (B) CORNER | 3-PLY 2x8x17'-8" | --- | --- | ON CONCRETE SLAB (100'+0") | 4 |
| (C) FULL LENGTH | 3-PLY 2x8x18'-9" | --- | --- | ON CONCRETE SLAB (100'+0") | 2 |
| (D) ENDWALL | 3-PLY 2x8x20'-4" | --- | --- | ON CONCRETE SLAB (100'+0") | 2 |
| (E) ENDWALL | 3-PLY 2x8x22'-4" | --- | --- | ON CONCRETE SLAB (100'+0") | 2 |
| (F) ENDWALL | 3-PLY 2x8x22'-11" | --- | --- | ON CONCRETE SLAB (100'+0") | 2 |
| (G) ENDWALL | 3-PLY 2x8x23'-6" | --- | --- | ON CONCRETE SLAB (100'+0") | 2 |
| (H) ENDWALL | 3-PLY 2x8x25'-7" | --- | --- | ON CONCRETE SLAB (100'+0") | 1 |
| (I) DOOR | 3-PLY 2x8x17'-8" | --- | --- | ON CONCRETE SLAB (100'+0") | 1 |

**NOTES:**
1. FIELD VERIFY ALL DOOR AND WINDOW ROUGH OPENING SIZES PRIOR TO INSTALLING FRAME-OUTS
2. ATTACH ALL ROOF, SIDE, END AND GABLE STEEL WITH PAINTED SCREWS
3. ENDWALL COLUMNS ARE 3-PLY TO THE BUILDING EAVE HEIGHT AND SINGLE PLY FROM THERE TO THE ROOF PLANE
4. 2x6 STANDARD DIAGONAL CORNER BRACING AT ALL CORNERS (UNLESS OTHERWISE NOTED)
5. 2x6 JACKBRACING AT ENDWALL COLUMNS (NOT NEEDED AT FULL LENGTH COLUMNS)
   ⊢ = LOCATION ON FLOOR PLAN FOR JACKBRACING
   (SEE DIAPHRAGM ACTION & MISC. DETAILS SHEET)
6. 2x4 PURLIN BLOCKING AT ENDWALL TRUSSES
7. 2x4 CORNER BLOCKING TO BE INSTALLED AT ALL CORNERS
8. ( >< ) = BAYS WITH 2x4 ROOFLINE X-BRACING (SEE DIAPHRAGM ACTION & MISC. DETAILS SHEET)

| BUILDING COLORS | | BUILDING ACCESSORIES |
|---|---|---|
| ROOF: | CHARCOAL GRAY | 2" WHITE VINYL FACED INSULATION IN ROOFLINE |
| SIDES/GABLES: | ASH GRAY | |
| WAINSCOT: | CHARCOAL GRAY | BUILDING ON CONCRETE SLAB WITH WET-SET BRACKETS |
| TRIM (TYP.): | CHARCOAL GRAY | CONCRETE FOAM FILLER AT ENTIRE BUILDING, LESS DOORS |
| F&J TRIM: | CHARCOAL GRAY | STEEL TO 100'+0" WITH BOTTOM TRIM |

## PURLIN LAYOUT

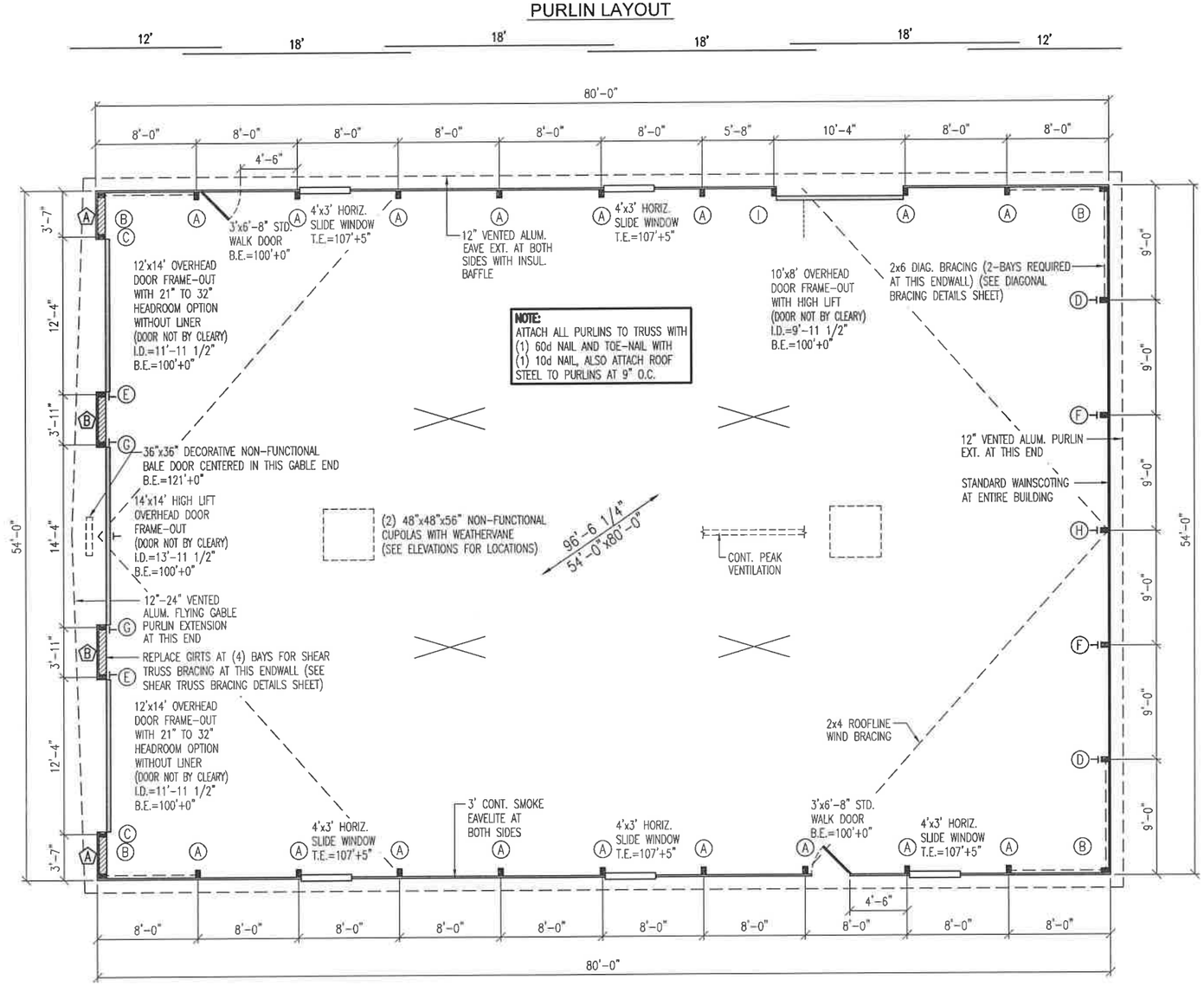


## CONT. PURLIN DESIGN

**CONSTRUCTION FOREMAN NOTE:**
BE SURE TO MAINTAIN THE OVERALL LAP DISTANCE AND THE SPACING FROM PURLIN END TO CENTER OF TRUSS AS SHOWN

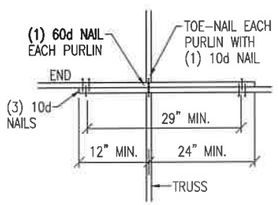


*PURLIN LAPS AT FIRST TRUSS FROM EACH ENDWALL*

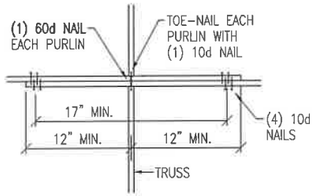


*ALL REMAINING PURLIN LAPS*

NORTH


CLEARY BUILDING CORP.
190 PAOLI STREET / P.O. BOX 930220
VERONA, WI 53593 / (800) 373-5550


DRAWN BY: *KPG*
DATE DRAWN: *12/23/2020*

PLAN REVISIONS:

| NUMBER | DATE | BY |
|---|---|---|
| 1 | 4/5/2021 | KPG |
| 2 | 4/23/21 | MW |
| 3 | | |
| 4 | | |

PROJECT NAME: BK TRUCKING - BRIAN BEDDO
PROJECT SITE ADDRESS: 1258 SOUTH MULBERRY DRIVE TOQUERVILLE, UTAH - WASHINGTON COUNTY
BUILDING SIZE: 54'-0"X80'-0"X17'-8"
SHEET NAME: FLOOR PLAN

PROJECT NUMBER: 2020107394
SHEET NUMBER: 120
SHEET SCALE: *NONE*

PROFESSIONAL STRUCTURAL ENGINEER
No. 5181743
MATTHEW BRIAN LAWINGER
STATE OF UTAH

4/26/21


File Name and Path: I:\Commercl\1CAD FILES\2020\2020107394\2020107394-120-FP-2.dwg
Printed By: Michael Waldera Date Printed: 4/23/2021 9:27 AM

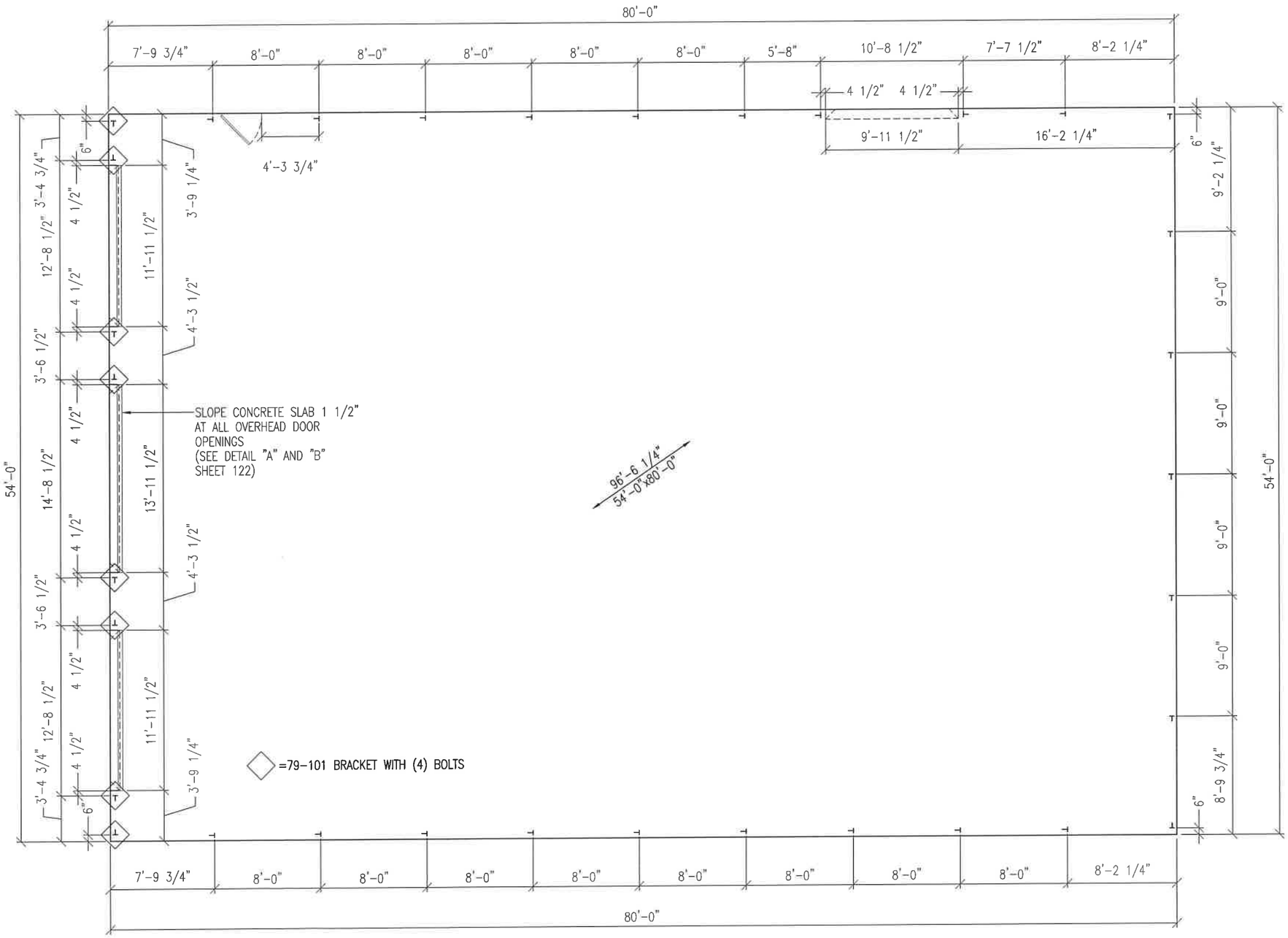


NORTH

CLEARY BUILDING CORP.
190 PAOLI STREET / P.O. BOX 930220
VERONA, WI 53593 / (800) 373-5550

DRAWN BY: KPG
DATE DRAWN: 12/23/2020

PLAN REVISIONS:

| NUMBER | DATE | BY |
|---|---|---|
| 1 | 4/5/2021 | KPG |
| 2 | 4/23/21 | MW |
| 3 | | |
| 4 | | |

PROJECT NAME:
BK TRUCKING - BRIAN BEDDO

PROJECT SITE ADDRESS:
1258 SOUTH MULBERRY DRIVE
TOQUERVILLE, UTAH - WASHINGTON COUNTY

BUILDING SIZE:
54'-0"X80'-0"X17'-8"

SHEET NAME:
CONCRETE BRACKET LAYOUT DETAILS

PROJECT NUMBER:
2020107394

SHEET NUMBER:
121

SHEET SCALE: NONE

PROFESSIONAL STRUCTURAL ENGINEER
No. 5181743
MATTHEW BRIAN LAWINGER
STATE OF UTAH

4/26/21

File Name and Path: I:\Commercl\1CAD FILES\2020\2020107394\2020107394-121-BRACKET-2.dwg
Printed By: Michael Waldera Date Printed: 4/23/2021 9:27 AM

## RECOMMENDED DETAILS WHEN EXTERIOR CONC. APRON IS PRESENT

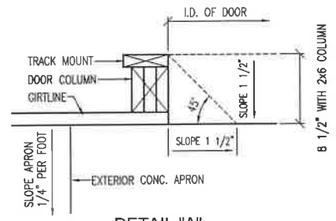


DETAIL "A"
*AT OVERHEAD DOOR*

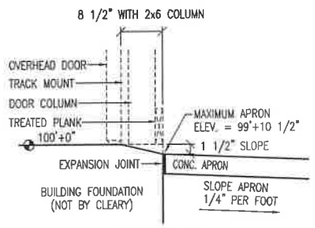


DETAIL "B"
*AT OVERHEAD DOOR*

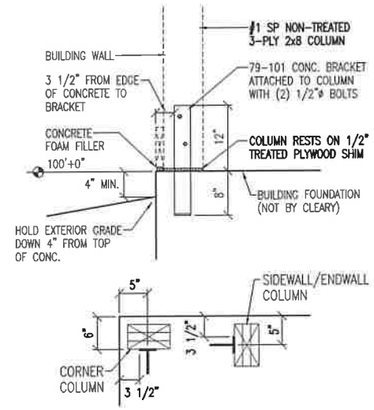


CONCRETE BRACKET PLACEMENT DETAIL
*WITH 2x8 COLUMNS*

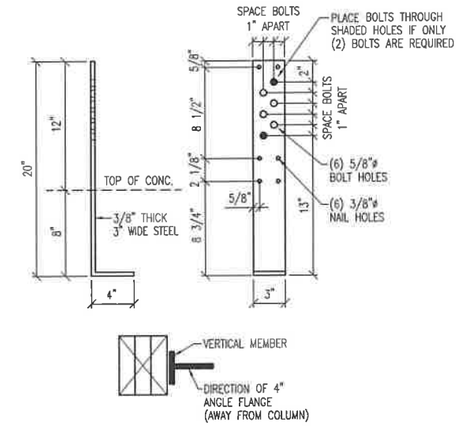


STANDARD 79-101
CONCRETE BRACKET DETAIL

## CONCRETE SPECIFICATIONS

CONCRETE FLOOR SLABS: CONCRETE SHALL HAVE A 28 DAY COMPRESSIVE STRENGTH OF 3500 PSI MINIMUM AND AN AIR ENTRAINMENT CONTENT OF 5% MINIMUM. CONTROL JOINTS SHALL BE PLACED AT 15' O.C. MAXIMUM. FOR GARAGE FLOOR SLABS WHERE A TROWEL FINISH IS DESIRED, AIR ENTRAINMENT MAY BE REDUCED TO 3% PROVIDED THE COMPRESSIVE STRENGTH OF THE CONCRETE IS INCREASED TO 4000 PSI MIN.

FOUNDATIONS AND FOOTINGS: CONCRETE SHALL HAVE A 28 DAY COMPRESSIVE STRENGTH OF 3000 PSI MINIMUM. WHERE EXPOSED TO WEATHER, CONCRETE SHALL HAVE AN AIR ENTRAINMENT OF 5% MINIMUM.

SUBGRADE: SLABS SHALL BE PLACED OVER A MINIMUM 6" COMPACTED GRANULAR MATERIAL. A (6) MIL. POLYETHYLENE VAPOR RETARDER WITH JOINTS LAPPED 6" MAY BE PLACED BETWEEN THE SUBGRADE AND THE CONCRETE.

STEEL REINFORCING: STEEL REINFORCEMENT SHALL COMPLY WITH ACI 318, SECTION 7. REINFORCEMENT SHALL BE 60 KSI MINIMUM. MINIMUM COVER SHALL BE 3" FOR CONCRETE CAST AGAINST AND PERMANENTLY EXPOSED TO EARTH AND 1 1/2" FOR CONCRETE EXPOSED TO EARTH OR WEATHER. MINIMUM CLEAR SPACING BETWEEN PARALLEL BARS SHALL BE 1"

WALL NOTES: LIMIT CONCRETE PLACEMENT TO 12'-0" FORM HEIGHT. CONTRACTOR'S CONSTRUCTION METHOD SHALL PROVIDED FOR MAX. CONCRETE DROP OF 4'-0" DURING PLACEMENT. USE TREMIE TO PREVENT AGGREGATE SEPARATION. VERTICAL CONTROL JOINTS SHALL BE SPACED AT 25'-0" MAXIMUM.

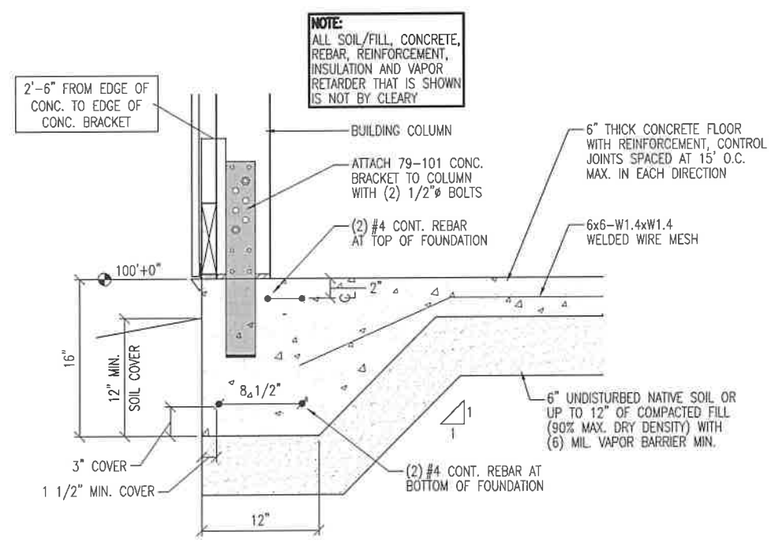


TYP. CONCRETE FOUNDATION DETAIL


CLEARY BUILDING CORP.
190 PAOLI STREET / P.O. BOX 930220
VERONA, WI 53593 / (800) 373-5550


DRAWN BY: *KPG*
DATE DRAWN: *12/23/2020*

PLAN REVISIONS:

| NUMBER | DATE | BY |
|---|---|---|
| 1 | 4/5/2021 | KPG |
| 2 | | |
| 3 | | |
| 4 | | |

PROJECT NAME: BK TRUCKING - BRIAN BEDDO
PROJECT SITE ADDRESS: 1258 SOUTH MULBERRY DRIVE TOQUERVILLE, UTAH - WASHINGTON COUNTY
BUILDING SIZE: 54'-0"X80'-0"X17'-8"
SHEET NAME: CONCRETE DETAILS

PROJECT NUMBER: 2020107394
SHEET NUMBER: 122
SHEET SCALE: *NONE*

PROFESSIONAL STRUCTURAL ENGINEER
No. 5181743
MATTHEW BRIAN LAWINGER
STATE OF UTAH

4/16/21


File Name and Path: I:\Commercl\1CAD FILES\2020\2020107394\2020107394-122-CONC DETAILS-1.dwg
Printed By: Michael Waldera Date Printed: 4/23/2021 8:51 AM

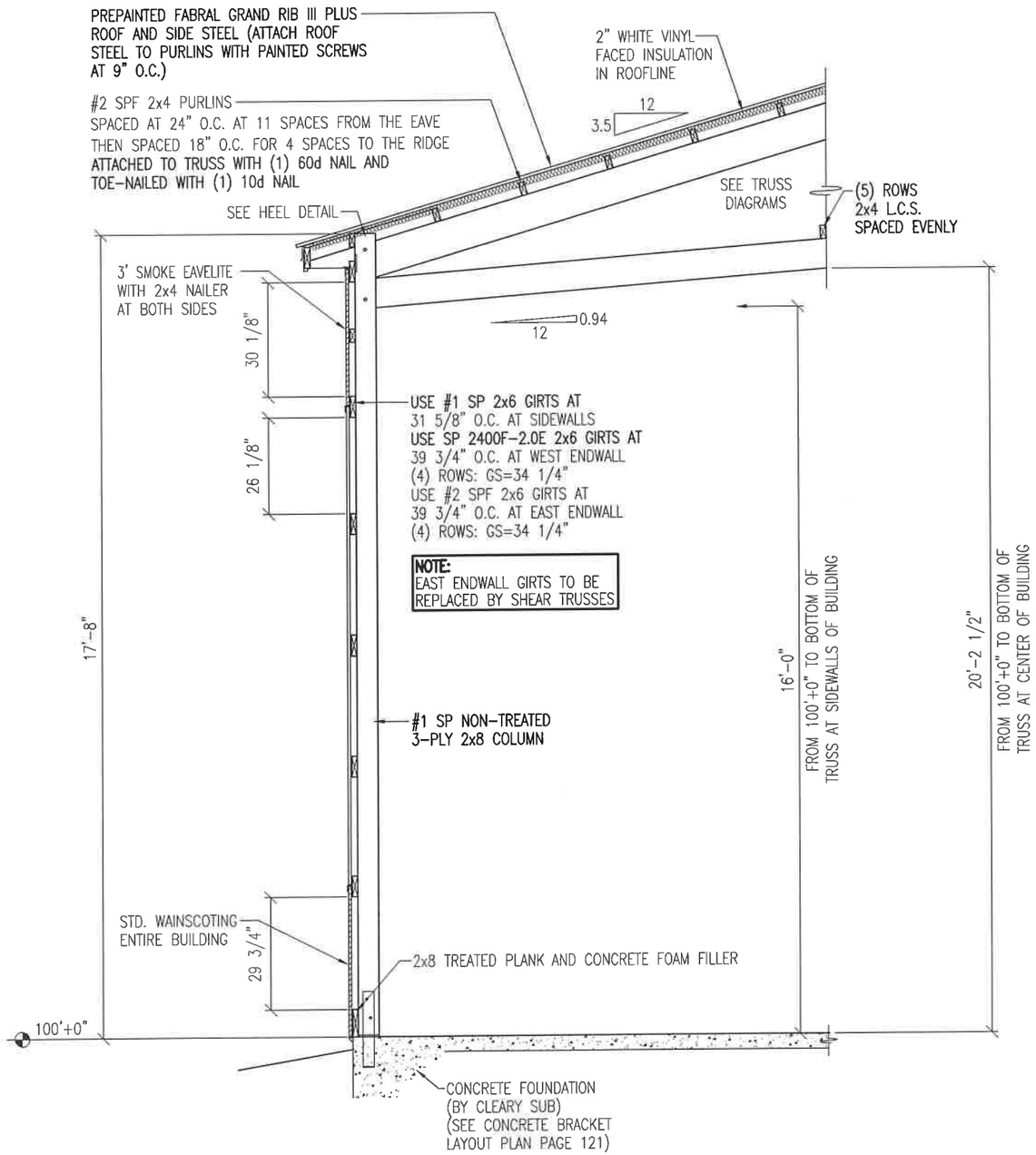


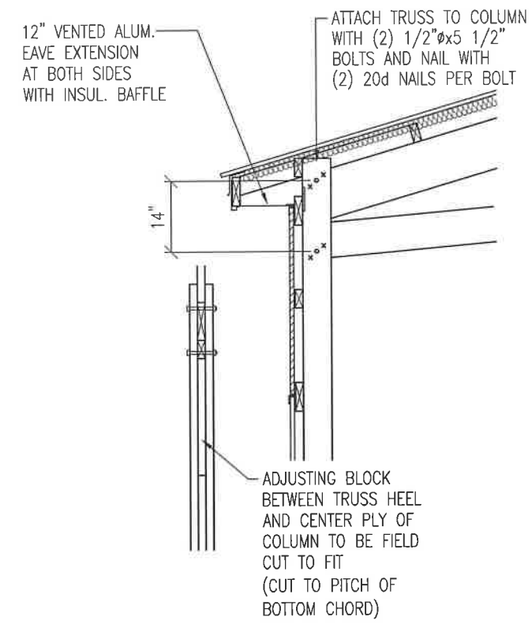


HEEL DETAIL

CLEARY BUILDING CORP.
190 PAOLI STREET / P.O. BOX 930220
VERONA, WI 53593 / (800) 373-5550

DRAWN BY: KPG
DATE DRAWN: 12/23/2020

PLAN REVISIONS:

| NUMBER | DATE | BY |
|---|---|---|
| 1 | 4/5/2021 | KPG |
| 2 | | |
| 3 | | |
| 4 | | |

PROJECT NAME: BK TRUCKING - BRIAN BEDDO
PROJECT SITE ADDRESS: 1258 SOUTH MULBERRY DRIVE TOQUERVILLE, UTAH - WASHINGTON COUNTY
BUILDING SIZE: 54'-0"X80'-0"X17'-8"
SHEET NAME: TYPICAL SECTION

PROJECT NUMBER: 2020107394
SHEET NUMBER: 130
SHEET SCALE: NONE

PROFESSIONAL STRUCTURAL ENGINEER
No. 5181743
MATTHEW BRIAN LAWINGER
STATE OF UTAH
4/20/21

File Name and Path: I:\Commercial\1CAD FILES\2020\2020107394\2020107394-130-SEC-1.dwg
Printed By: Michael Waldera Date Printed: 4/23/2021 8:51 AM

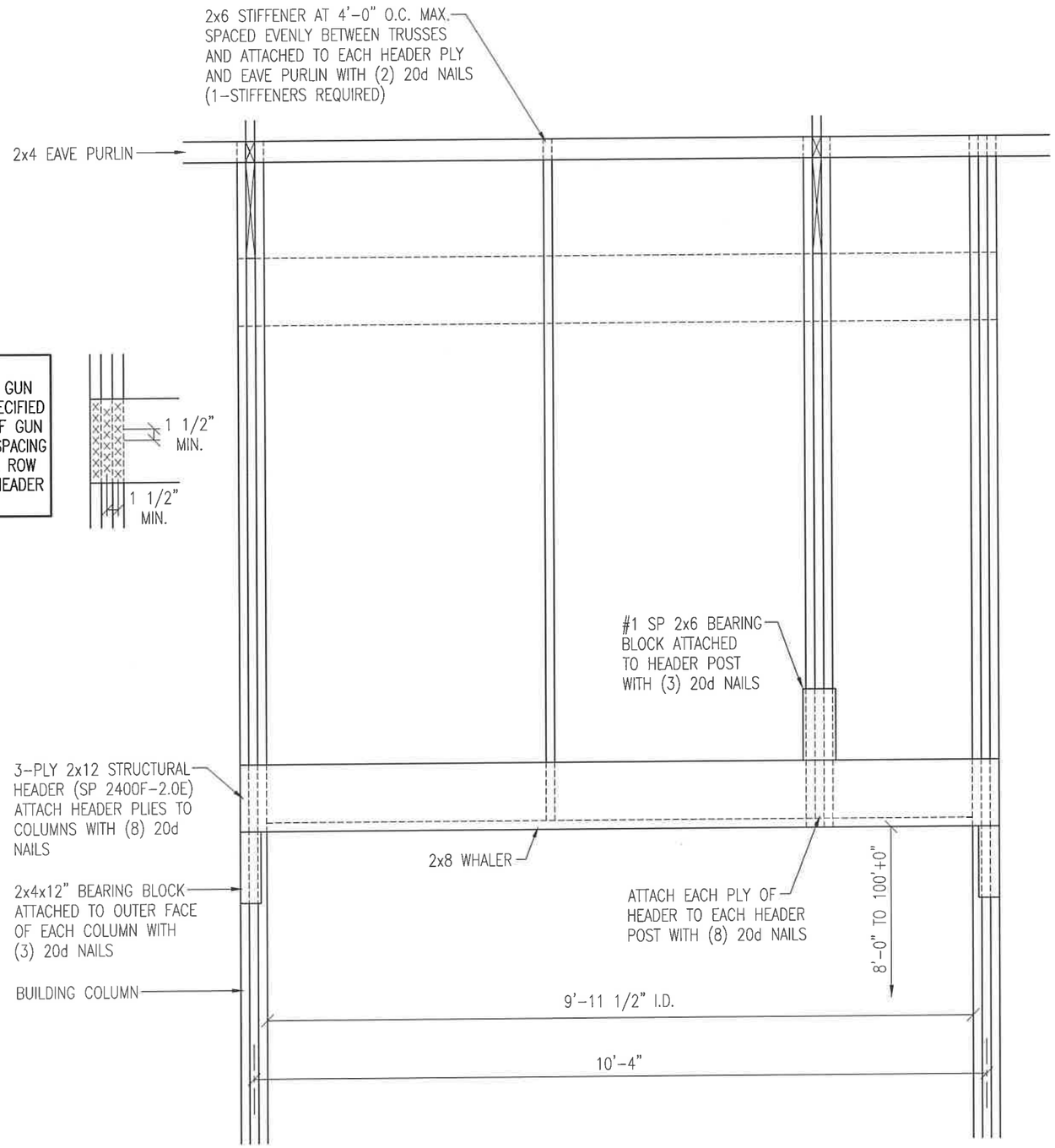


**NOTE-NAILING ALTERNATIVE:**
INSTALL (2) 3 1/2" x .131RS GUN NAILS FOR EACH 20d NAIL SPECIFIED (USE 20d NAILS IF NUMBER OF GUN NAILS REQUIRED REDUCES THE SPACING IN A VERTICAL OR HORIZONTAL ROW TO LESS THAN 1 1/2" AT A HEADER POST OR COLUMN AS SHOWN)




## 10'x8' OVERHEAD DOOR HEADER DETAIL

*VIEW FROM OUTSIDE OF BUILDING*

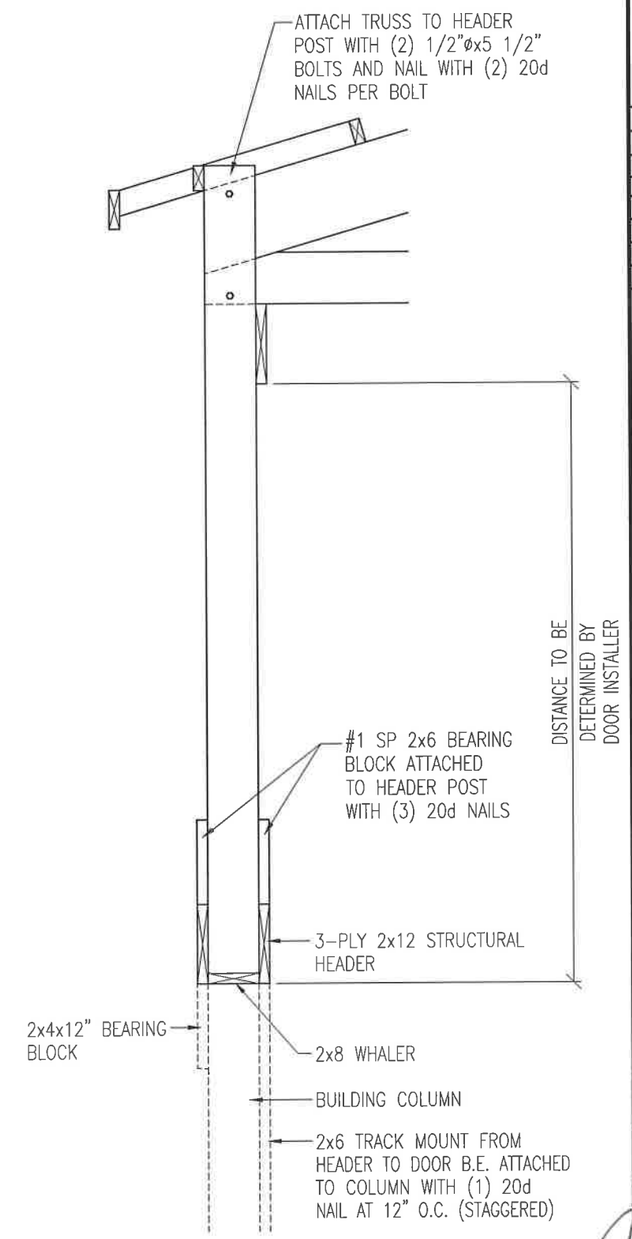


## SECTION AT HEADER POST


CLEARY BUILDING CORP.
190 PAOLI STREET / P.O. BOX 930220
VERONA, WI 53593 / (800) 373-5550


DRAWN BY: *KPG*
DATE DRAWN: *12/23/2020*

PLAN REVISIONS:

| NUMBER | DATE | BY |
|---|---|---|
| 1 | | |
| 2 | *4/23/21* | *MW* |
| 3 | | |
| 4 | | |

PROJECT NAME: BK TRUCKING - BRIAN BEDDO
PROJECT SITE ADDRESS: 1258 SOUTH MULBERRY DRIVE TOQUERVILLE, UTAH - WASHINGTON COUNTY
BUILDING SIZE: 54'-0"X80'-0"X17'-8"
SHEET NAME: HEADER DETAILS

PROJECT NUMBER: 2020107394
SHEET NUMBER: 135
SHEET SCALE: *NONE*

PROFESSIONAL STRUCTURAL ENGINEER
No. 5181743
MATTHEW BRIAN LAWINGER
STATE OF UTAH

4/26/21


File Name and Path: I:\Commercl\1CAD FILES\2020\2020107394\2020107394-135-HEADER-2.dwg
Printed By: Michael Waldera Date Printed: 4/23/2021 9:25 AM

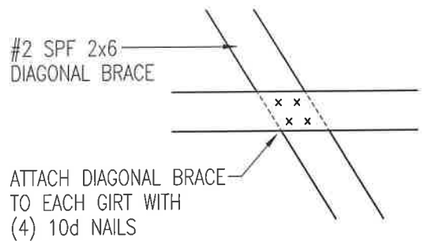


## BRACE TO GIRT CONNECTION DETAIL

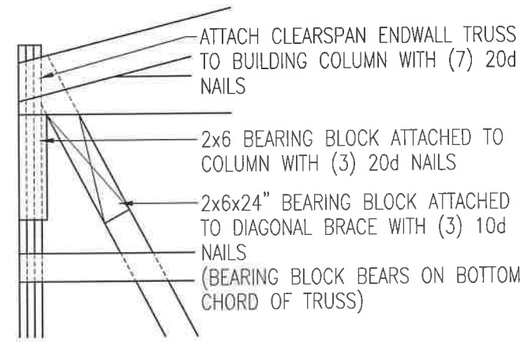


## BRACE CONNECTION DETAIL

*AT TOP OF BRACE AT CORNER COLUMN*

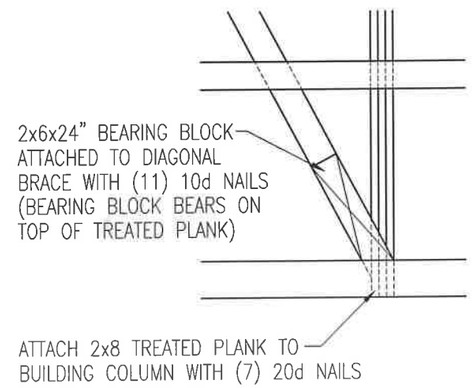


## BRACE CONNECTION DETAIL

*AT BOTTOM OF BRACE AT ENDWALL COLUMN*

# ENDWALL DIAGONAL BRACING DETAIL

*AT WEST ENDWALL*


CLEARY BUILDING CORP.
190 PAOLI STREET / P.O. BOX 930220
VERONA, WI 53593 / (800) 373-5550


DRAWN BY: *KPG*

DATE DRAWN: *12/23/2020*

PLAN REVISIONS:

| NUMBER | DATE | BY |
|---|---|---|
| 1 | 4/5/2021 | KPG |
| 2 | | |
| 3 | | |
| 4 | | |

PROJECT NAME:
BK TRUCKING - BRIAN BEDDO

PROJECT SITE ADDRESS:
1258 SOUTH MULBERRY DRIVE
TOQUERVILLE, UTAH - WASHINGTON COUNTY

BUILDING SIZE:
54'-0"X80'-0"X17'-8"

SHEET NAME:
DIAGONAL BRACING DETAILS

PROJECT NUMBER:
2020107394

SHEET NUMBER:
140

SHEET SCALE: *NONE*

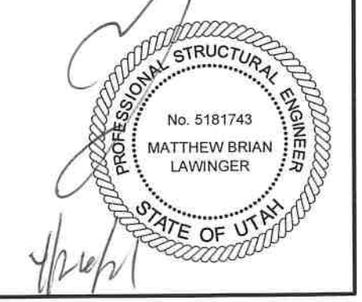



File Name and Path: I:\Commercl\1CAD FILES\2020\2020107394\2020107394-140-BRACE-1.dwg
Printed By: Michael Waldera Date Printed: 4/23/2021 8:50 AM

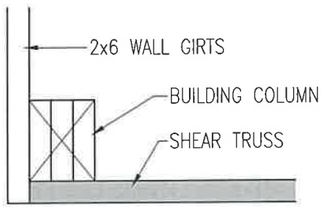


## SHEAR TRUSS DETAIL
*AT CORNER COLUMN*

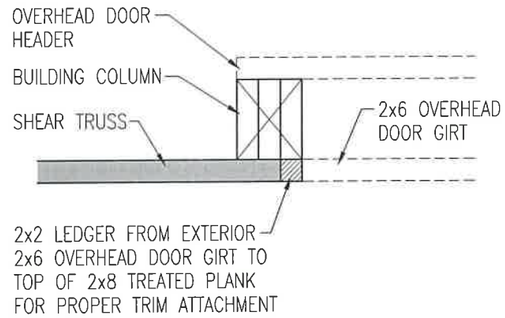


## SHEAR TRUSS DETAIL
*AT OVERHEAD DOOR OPENING*

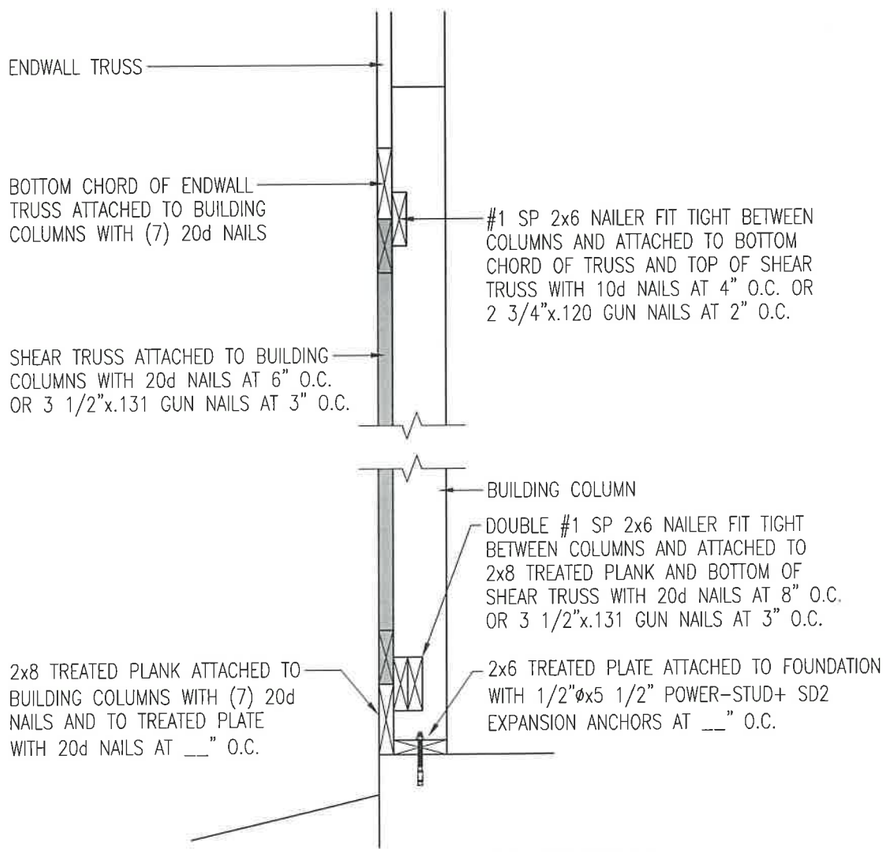


## ENDWALL SHEAR TRUSS SECTION

| | | | |
|---|---|---|---|
| SEQN: 36108 FLAT<br>FROM: ZEW | Ply: 1<br>Qty: 1 | Job Number: 2020107394<br>Truss Label: SA3-6-4x15-8-8SHEAR1310 | Cust: R 7054 JRef: 1X4c70540002 T2896<br>DrwNo: 096.21 0801.37380<br>/ FK 04/06/2021 |

TOP

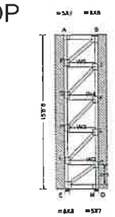

BOTTOM

Plates 6X8 Unless Noted

**Loading Criteria** (psf)
TCLL: 1.00
TCDL: 1.00
BCLL: 0.00
BCDL: 1.00
Des Ld: 3.00
NCBCLL: 0.00
Soffit: 2.00
Load Duration: 1.60
Spacing: 12.0 "

**Snow Criteria** (Pg,Pf in PSF)
Pg: NA Ct: NA CAT: NA
Pf: NA Ce: NA
Lu: NA Cs: NA
Snow Duration: NA

Building Code:
IBC 2018
TPI Std: 2014
Rep Fac: No
FT/RT/PT:20(20)/10(10)/4(0)
Plate Type(s):
WAVE

**Defl/CSI Criteria**

| PP Deflection in | loc | L/defl | L/# |
|---|---|---|---|
| VERT(LL): | 0.024 A | 999 | 240 |
| VERT(CL): | 0.024 A | 999 | 180 |
| HORZ(LL): | 0.032 A | - | - |
| HORZ(TL): | 0.032 A | - | - |

Creep Factor: 2.0
Max TC CSI: 0.030
Max BC CSI: 0.025
Max Web CSI: 1.000

VIEW Ver: 18.02.01A.0205.19

**▲Maximum Reactions (lbs)**

| | Gravity | | | Non-Gravity | | |
|---|---|---|---|---|---|---|
| Loc | R+ | R- | Rh | Rw | U | RL |
| E | - | - | - | 1022 | 1017 | 658 |
| M | - | - | - | 921 | 915 | 655 |

Wind reactions based on MWFRS
E Brg Width = 5.5 Min Req = 5.5
M Brg Width = 5.5 Min Req = 5.5
Bearings E & M are a rigid surface.
Members not listed have forces less than 375#

**Maximum Top Chord Forces Per Ply (lbs)**

| Chords | Tens. | Comp. |
|---|---|---|
| A - B | 1308 | - 1308 |

**Maximum Bot Chord Forces Per Ply (lbs)**

| Chords | Tens. | Comp. |
|---|---|---|
| E - D | 655 | - 655 |

**Maximum Web Forces Per Ply (lbs)**

| Webs | Tens. | Comp. | Webs | Tens. | Comp. |
|---|---|---|---|---|---|
| A - F | 1112 | - 1115 | H - K | 1707 | - 1707 |
| E - I | 1864 | - 1867 | H - L | 1325 | - 1325 |
| E - C | 1555 | - 1555 | I - C | 1322 | - 1322 |
| F - G | 1498 | - 1500 | I - L | 1705 | - 1705 |
| F - B | 1591 | - 1591 | B - J | 962 | - 965 |
| F - J | 1319 | - 1319 | C - D | 921 | - 924 |
| G - H | 1699 | - 1702 | J - K | 975 | - 978 |
| G - J | 1712 | - 1712 | K - L | 764 | - 767 |
| G - K | 1323 | - 1323 | L - C | 930 | - 933 |
| H - I | 1912 | - 1915 | | | |

**Lumber**
Top chord: 2x6 SP #1;
Bot chord: 2x6 SP #1;
Webs: 2x4 SP #2; W2,W3,W4,W5 2x6 SP #1;

**Loading**
Truss transfers a maximum horizontal load of 1310 # ( 445.96 plf ) along top chord, from either direction, to supports where indicated. Diaphragm and connections are to be designed by Engineer of Record.

| Drag Loads: | Force(#) | (PLF) | Mbr | Start | End |
|---|---|---|---|---|---|
| Case 1: | 1310 | 445.96 | TC | 0.29 | 3.23 |
| | 1310 | 445.96 | BC | 0.29 | 3.23 |

**Additional Notes**
Negative reaction(s) of -1017# MAX. Requires uplift connection. See Maximum Reactions.

See Cleary Building Corp. drawing for bearing attachment and bottom chord bracing details. This designs applies to both open wall and enclosed wall buildings.

04/06/2021

**WARNING** READ AND FOLLOW ALL NOTES ON THIS DRAWING!
**IMPORTANT** FURNISH THIS DRAWING TO ALL CONTRACTORS INCLUDING THE INSTALLERS

Trusses require extreme care in fabricating, handling, shipping, installing and bracing. Refer to and follow the latest edition of BCSI (Building Component Safety Information, by TPI and SBCA) for safety practices prior to performing these functions. Installers shall provide temporary bracing per BCSI. Unless noted otherwise, top chord shall have properly attached structural sheathing and bottom chord shall have a properly attached rigid ceiling. Locations shown for permanent lateral restraint of webs shall have bracing installed per BCSI sections B3, B7, or B10, as applicable. Apply plates to each face of truss and position as shown above and on the Joint Details, unless noted otherwise. Refer to drawings 160A-2 for standard plate positions. Refer to job's General Notes page for additional information.

Alpine, a division of ITW Building Components Group Inc. shall not be responsible for any deviation from this drawing, any failure to build the truss in conformance with ANSI/TPI 1, or for handling, shipping, installation and bracing of trusses. A seal on this drawing or cover page listing this drawing, indicates acceptance of professional engineering responsibility solely for the design shown. The suitability and use of this drawing for any structure is the responsibility of the Building Designer per ANSI/TPI 1 Sec.2.

For more information see these web sites: Alpine: alpineitw.com; TPI: tpinst.org; SBCA: sbcindustry.com; ICC: iccsafe.org; AWC: awc.org

ALPINE
514 Earth City Expressway
Suite 242
Earth City, Missouri 63045

FOREMAN NOTE:
TO ENSURE PROPER INSTALLATION OF SHEAR TRUSS, PLEASE NOTE TOP AND BOTTOM NOTED ON DIAGRAM AND VERIFY ENDWALL GIRT SPACING PRIOR TO INSTALLATION


CLEARY BUILDING CORP.
190 PAOLI STREET / P.O. BOX 930220
VERONA, WI 53593 / (800) 373-5550


DRAWN BY: *KPG*
DATE DRAWN: *12/23/2020*

PLAN REVISIONS:

| NUMBER | DATE | BY |
|---|---|---|
| 1 | 4/5/2021 | KPG |
| 2 | | |
| 3 | | |
| 4 | | |

PROJECT NAME: BK TRUCKING - BRIAN BEDDO
PROJECT SITE ADDRESS: 1258 SOUTH MULBERRY DRIVE TOQUERVILLE, UTAH - WASHINGTON COUNTY
BUILDING SIZE: 54'-0"X80'-0"X17'-8"
SHEET NAME: SHEAR TRUSS BRACING DETAILS A

PROJECT NUMBER: 2020107394
SHEET NUMBER: 141
SHEET SCALE: *NONE*

PROFESSIONAL STRUCTURAL ENGINEER
No. 5181743
MATTHEW BRIAN LAWINGER
STATE OF UTAH
4/26/21


File Name and Path: I:\Commercial\1CAD FILES\2020\2020107394\2020107394-141-SHEAR A-1.dwg
Printed By: Michael Waldera Date Printed: 4/23/2021 8:50 AM

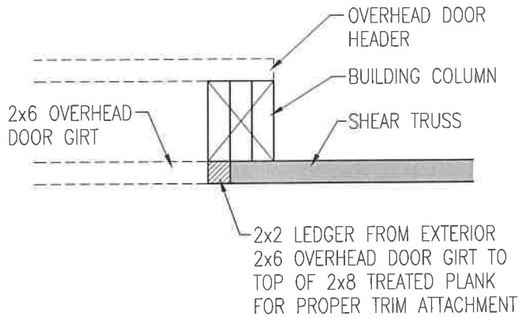


## SHEAR TRUSS DETAIL
*AT OVERHEAD DOOR OPENING*

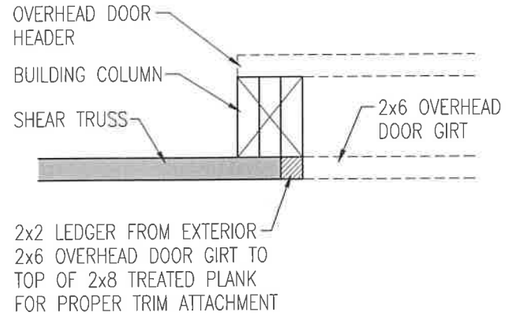


## SHEAR TRUSS DETAIL
*AT OVERHEAD DOOR OPENING*

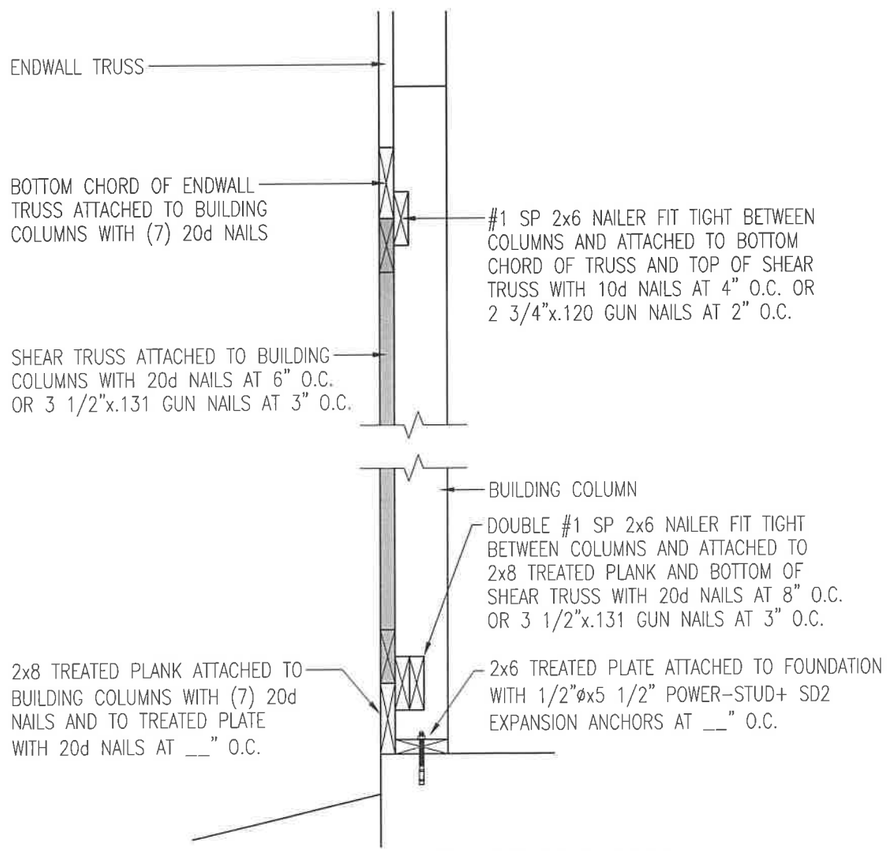


## ENDWALL SHEAR TRUSS SECTION

| | | | |
|---|---|---|---|
| SEQN: 36110 FLAT<br>FROM: ZEW | Ply 1<br>Qty 1 | Job Number: 2020107394<br>Truss Label: SB4-0-8x15-8-8SHEAR1465 | Cust: R 7054 JRef:1X4c70540002 T2897<br>DrwNo: 096.21.0805 38493<br>/ FK 04/06/2021 |

TOP

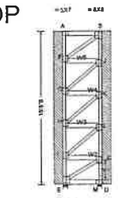

BOTTOM

**Loading Criteria** (psf)
TCLL: 1.00
TCDL: 1.00
BCLL: 0.00
BCDL: 1.00
Des Ld: 3.00
NCBCLL: 0.00
Soffit: 2.00
Load Duration: 1.60
Spacing: 12.0 "

**Snow Criteria** (Pg,Pf in PSF)
Pg: NA Ct: NA CAT: NA
Pf: NA Cs: NA
Lu: NA Cs: NA
Snow Duration: NA

Building Code:
IBC 2018
TPI Std: 2014
Rep Fac: No
FT/RT/PT:20(20)/10(10)/4(0)
Plate Type(s):
WAVE

**Defl/CSI Criteria**

| PP Deflection in | loc | L/defl | L/# |
|---|---|---|---|
| VERT(LL): | 0.021 A | 999 | 240 |
| VERT(CL): | 0.021 A | 999 | 180 |
| HORZ(LL): | 0.063 A | - | - |
| HORZ(TL): | 0.064 A | - | - |

Creep Factor: 2.0
Max TC CSI: 0.034
Max BC CSI: 0.042
Max Web CSI: 1.000

VIEW Ver: 18.02.01A.0205.19

**▲ Maximum Reactions (lbs)**

| | Gravity | | | Non-Gravity | |
|---|---|---|---|---|---|
| Loc | R+ / R- | Rh | Rw | U | RL |
| E | - / - | - | 855 | 848 | 739 |
| M | - / - | - | 758 | 751 | 736 |

Wind reactions based on MWFRS
E Brg Width = 5.5 Min Req = 5.5
M Brg Width = 5.5 Min Req = 5.5
Bearings E & M are a rigid surface.
Members not listed have forces less than 375#

**Maximum Top Chord Forces Per Ply (lbs)**

| Chords | Tens. | Comp. |
|---|---|---|
| A - B | 1461 | - 1462 |

**Maximum Bot Chord Forces Per Ply (lbs)**

| Chords | Tens. | Comp. |
|---|---|---|
| E - D | 732 | - 732 |

**Maximum Web Forces Per Ply (lbs)**

| Webs | Tens. | Comp. | Webs | Tens. | Comp. |
|---|---|---|---|---|---|
| A - F | 1055 | - 1058 | H - K | 1809 | - 1809 |
| E - I | 1672 | - 1676 | H - L | 1477 | - 1477 |
| E - C | 1684 | - 1684 | I - C | 1477 | - 1477 |
| F - G | 1401 | - 1404 | I - L | 1806 | - 1806 |
| F - B | 1703 | - 1703 | B - J | 931 | - 935 |
| F - J | 1472 | - 1471 | G - D | 753 | - 756 |
| G - H | 1567 | - 1571 | J - K | 969 | - 972 |
| G - J | 1813 | - 1813 | K - L | 794 | - 797 |
| G - K | 1475 | - 1475 | L - C | 789 | - 793 |
| H - I | 1744 | - 1747 | | | |

**Lumber**
Top chord: 2x6 SP #1;
Bot chord: 2x6 SP #1;
Webs: 2x4 SP #2; W2,W3,W4,W5 2x6 SP #1;

**Loading**
Truss transfers a maximum horizontal load of 1465 # ( 423.61 plf ) along top chord, from either direction, to supports where indicated. Diaphragm and connections are to be designed by Engineer of Record.

| Drag Loads: | Force(#) | (PLF) | Mbr | Start | End |
|---|---|---|---|---|---|
| Case 1: | 1465 | 423.61 | TC | 0.29 | 3.75 |
| | 1465 | 423.61 | BC | 0.29 | 3.75 |

**Additional Notes**
Negative reaction(s) of -848# MAX. Requires uplift connection. See Maximum Reactions.

Plates 6X8 Unless Noted

See Cleary Building Corp. drawing for bearing attachment and bottom chord bracing details. This designs applies to both open wall and enclosed wall buildings.

04/06/2021

**WARNING** READ AND FOLLOW ALL NOTES ON THIS DRAWING!
**IMPORTANT** FURNISH THIS DRAWING TO ALL CONTRACTORS INCLUDING THE INSTALLERS
Trusses require extreme care in fabricating, handling, shipping, installing and bracing. Refer to and follow the latest edition of BCSI (Building Component Safety Information, by TPI and SBCA) for safety practices prior to performing these functions. Installers shall provide temporary bracing per BCSI. Unless noted otherwise, top chord shall have properly attached structural sheathing and bottom chord shall have a properly attached rigid ceiling. Locations shown for permanent lateral restraint of webs shall have bracing installed per BCSI sections B3, B7, or B10, as applicable. Apply plates to each face of truss and position as shown above and on the Joint Details, unless noted otherwise. Refer to drawings 160A-Z for standard plate positions. Refer to job's General Notes page for additional information.

Alpine, a division of ITW Building Components Group Inc. shall not be responsible for any deviation from this drawing, any failure to build the truss in conformance with ANSI/TPI 1, or for handling, shipping, installation and bracing of trusses. A seal on this drawing or cover page listing this drawing, indicates acceptance of professional engineering responsibility solely for the design shown. The suitability and use of this drawing for any structure is the responsibility of the Building Designer per ANSI/TPI 1 Sec.2.
For more information see these web sites: Alpine: alpineitw.com; TPI: tpinst.org; SBCA: sbcindustry.com; ICC: iccsafe.org; AWC: awc.org

ALPINE
An ITW COMPANY
514 Earth City Expressway
Suite 242
Earth City, Missouri 63045

FOREMAN NOTE:
TO ENSURE PROPER INSTALLATION OF SHEAR TRUSS, PLEASE NOTE TOP AND BOTTOM NOTED ON DIAGRAM AND VERIFY ENDWALL GIRT SPACING PRIOR TO INSTALLATION

CLEARY BUILDING CORP.
190 PAOLI STREET / P.O. BOX 930220
VERONA, WI 53593 / (800) 373-5550

DRAWN BY: KPG
DATE DRAWN: 12/23/2020
PLAN REVISIONS:

| NUMBER | DATE | BY |
|---|---|---|
| 1 | 4/5/2021 | KPG |
| 2 | | |
| 3 | | |
| 4 | | |

PROJECT NAME: BK TRUCKING - BRIAN BEDDO
PROJECT SITE ADDRESS: 1258 SOUTH MULBERRY DRIVE TOQUERVILLE, UTAH - WASHINGTON COUNTY
BUILDING SIZE: 54'-0"X80'-0"X17'-8"
SHEET NAME: SHEAR TRUSS BRACING DETAILS B

PROJECT NUMBER: 2020107394
SHEET NUMBER: 142
SHEET SCALE: NONE

PROFESSIONAL STRUCTURAL ENGINEER
No. 5181743
MATTHEW BRIAN LAWINGER
STATE OF UTAH
4/24/21

File Name and Path: I:\Commercl\1CAD FILES\2020\2020107394\2020107394-142-SHEAR B-1.dwg
Printed By: Michael Waldera Date Printed: 4/23/2021 8:50 AM

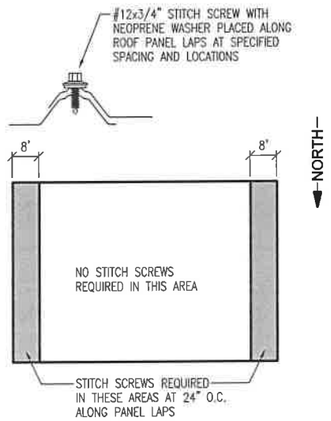


**CONSTRUCTION FORMAN NOTE:**
STITCH SCREW TO NEXT STEEL LAP BEYOND REQUIRED DISTANCE FROM ENDWALL OF BUILDING

## STITCH SCREW DETAIL
*AT ROOF STEEL*

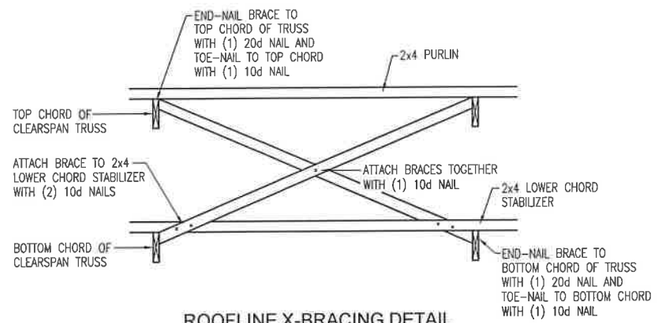


## ROOFLINE X-BRACING DETAIL
*X-BRACING IS ATTACHED TO LOWER CHORD STABILIZER*
*SEE FLOOR PLAN FOR X-BRACE LOCATIONS*

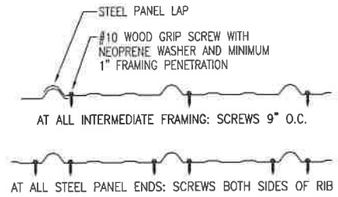


NOTE: PAN NAILS MAY BE SUBSTITUTED FOR PANEL END FASTENERS WHEN CONCEALED BY FLASHING

## GRAND RIB 3 STEEL ATTACHMENT DETAIL

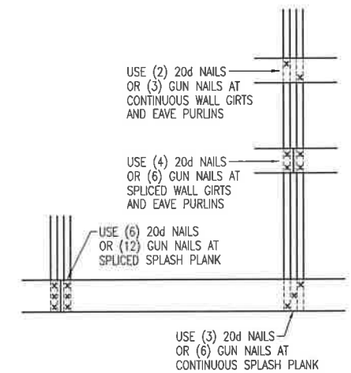


NOTE: 20d NAILS TO BE RING SHANK HOT DIPPED GALVANIZED GUN NAIL ALTERNATE = 0.131x3 1/2 RS-TLN

NOTE: SPLASH PLANK AT BRACING LOCATIONS REQUIRE ADDITIONAL FASTENERS (SEE BRACING DETAIL SHEET)

## STANDARD WALL FRAMING NAILING

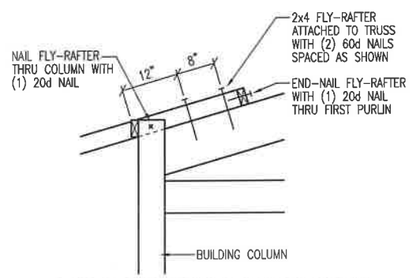


## FLY-RAFTER CONNECTION DETAIL

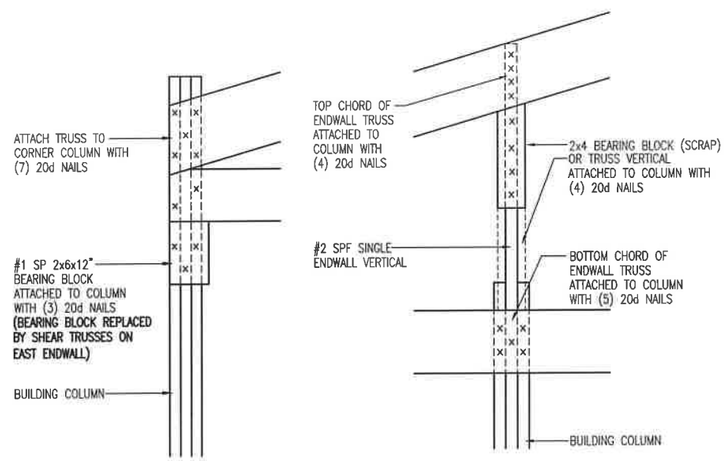


## STRUCTURAL ENDWALL TRUSS TO COLUMN CONNECTION DETAIL
*AT BOTH ENDWALLS*

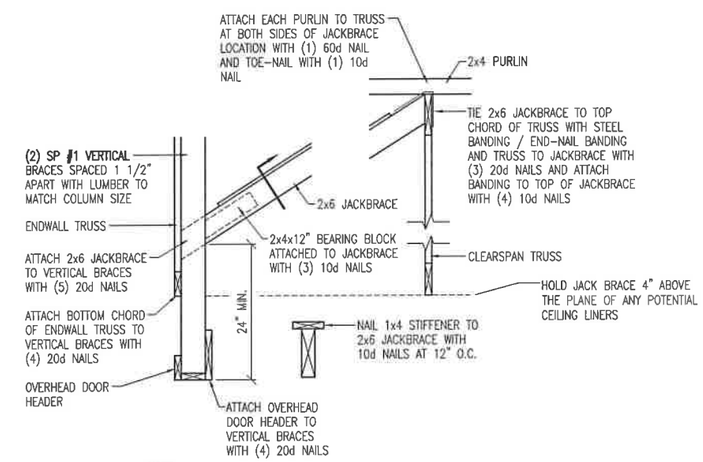


**NOTE:**
WHEN INSTALLING JACKBRACE UNITS OVER AN OVERHEAD DOOR FRAME-OUT, HOLD JACKBRACE UNIT UP 24" ABOVE DOOR WHALER

**NOTE:**
CENTER ONE JACKBRACE UNIT FOR OVERHEAD DOORS WIDER THAN 12' UP TO AND INCLUDING 20' WIDE, EVENLY SPACE TWO JACKBRACE UNITS FOR OVERHEAD DOORS MORE THAN 20' WIDE

## JACKBRACE DETAIL
*AT OVERHEAD DOOR*

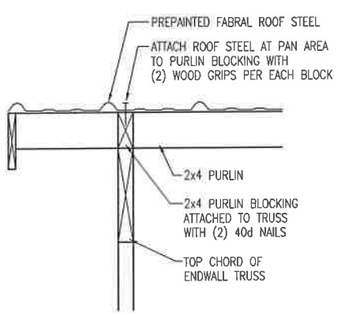


## GABLE DETAIL
*WITH PURLIN EXTENSION*

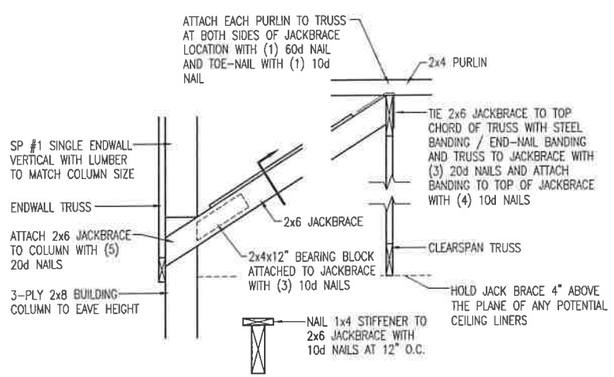


## JACKBRACE DETAIL
*AT ENDWALL COLUMNS*


CLEARY BUILDING CORP.
190 PAOLI STREET / P.O. BOX 930220
VERONA, WI 53593 / (800) 373-5550


DRAWN BY: *KPG*
DATE DRAWN: *12/23/2020*

PLAN REVISIONS:

| NUMBER | DATE | BY |
|---|---|---|
| 1 | 4/5/2021 | KPG |
| 2 | 4/23/21 | MW |
| 3 | | |
| 4 | | |

PROJECT NAME: BK TRUCKING - BRIAN BEDDO
PROJECT SITE ADDRESS: 1258 SOUTH MULBERRY DRIVE TOQUERVILLE, UTAH - WASHINGTON COUNTY
BUILDING SIZE: 54'-0"X80'-0"X17'-8"
SHEET NAME: DIAPHRAGM ACTION & MISC. DETAILS

PROJECT NUMBER: 2020107394

SHEET NUMBER: 150

SHEET SCALE: *NONE*

PROFESSIONAL STRUCTURAL ENGINEER
No. 5181743
MATTHEW BRIAN LAWINGER
STATE OF UTAH
4/26/21


File Name and Path: I:\Commercl\1CAD FILES\2020\2020107394\2020107394-150-DIA-1.dwg
Printed By: Michael Waldera Date Printed: 4/23/2021 9:28 AM

## TRUSS CHECK
(CHECK BOX AND INITIAL)

| | | |
|---|---|---|
| [X] | TRUSS SIZE | KPG |
| [X] | ROOF PITCH | KPG |
| [X] | BAY SPACING | KPG |
| [X] | SLC / RLC | KPG |
| [X] | DESIGN LOADS | KPG |
| [X] | OVERHANGS | KPG |


CLEARY BUILDING CORP.
190 PAOLI STREET / P.O. BOX 930220
VERONA, WI 53593 / (800) 373-5550


DRAWN BY: *KPG*
DATE DRAWN: *12/23/2020*

PLAN REVISIONS:

| NUMBER | DATE | BY |
|---|---|---|
| 1 | 4/5/2021 | KPG |
| 2 | | |
| 3 | | |
| 4 | | |

## RAISED LOWER CHORD TRUSS

SEQN: 538534 SCIS FROM: MJS | Ply: 1 Qty: 1 | Job Number: 2020107394 | Truss Label: TA53-9EMRC20STST8OC35truss115W | Cust: R 7054 JRef:1X4770540008 T2892 DrwNo: 091.21.1437.20140 / DJR 04/01/2021

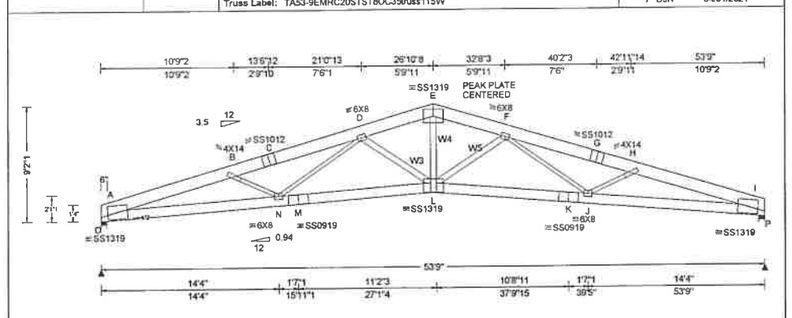


**Loading Criteria** (psf)
TCLL: 20.00
TCDL: 4.00
BCLL: 0.00
BCDL: 5.00
Des Ld: 29.00
NCBCLL: 0.00
Soffit: 2.00
Load Duration: 1.15
Spacing: 96.0 "

**Wind Criteria**
Wind Std: ASCE 7-16
Speed: 115 mph
Enclosure: Closed
Risk Category: II
EXP: C Kzt: NA
Mean Height: 21.40 ft
TCDL: 2.4 psf
BCDL: 3.0 psf
MWFRS Parallel Dist: 0 to h/2
C&C Dist a: 5.38 ft
Loc. from endwall: Any
GCpi: 0.18
Wind Duration: 1.60

**Snow Criteria** (Pg,Pf in PSF)
Pg: 21.0 Ct: 1.2 CAT: II
Pf: 17.6 Ce: 1.0
Lu: 22.5 Cs: 0.98
Snow Duration: 1.15

Building Code:
IBC 2018
TPI Std: 2014
Rep Fac: No
FT/RT/PT:20(20)/10(10)/4(0)
Plate Type(s):
18SS, WAVE

**Defl/CSI Criteria**
PP Deflection in loc L/defl L/#
VERT(LL): 1.208 L 534 240
VERT(CL): 1.760 L 366 180
HORZ(LL): 0.462 J - -
HORZ(TL): 0.674 J - -
Creep Factor: 2.0
Max TC CSI: 0.922
Max BC CSI: 0.970
Max Web CSI: 0.917

VIEW Ver: 18.02.01A.0205.19

**▲Maximum Reactions (lbs)**

| Loc | Gravity R+ | Gravity /R- | Gravity /Rh | Non-Gravity /Rw | Non-Gravity /U | Non-Gravity /RL |
|---|---|---|---|---|---|---|
| O | 6273 | /- | /- | /2610 | /1782 | /529 |
| P | 6273 | /- | /- | /2610 | /1782 | /- |

Wind reactions based on MWFRS
O Brg Width = 5.5 Min Req = 5.2
P Brg Width = 5.5 Min Req = 5.2
Bearings O & P are a rigid surface.
Members not listed have forces less than 375#

**Maximum Top Chord Forces Per Ply (lbs)**

| Chords | Tens. | Comp. | Chords | Tens. | Comp. |
|---|---|---|---|---|---|
| A - B | 5742 | -19834 | E - F | 4387 | -15415 |
| B - C | 5113 | -18545 | F - G | 5155 | -18386 |
| C - D | 5155 | -18386 | G - H | 5113 | -18545 |
| D - E | 4387 | -15415 | H - I | 5742 | -19834 |

**Maximum Bot Chord Forces Per Ply (lbs)**

| Chords | Tens. | Comp. | Chords | Tens. | Comp. |
|---|---|---|---|---|---|
| A - N | 18717 | -5266 | L - K | 17081 | -4406 |
| N - M | 17034 | -4410 | K - J | 17034 | -4410 |
| M - L | 17081 | -4406 | J - I | 18717 | -5266 |

**Maximum Web Forces Per Ply (lbs)**

| Webs | Tens. | Comp. | Webs | Tens. | Comp. |
|---|---|---|---|---|---|
| B - N | 990 | -1247 | L - F | 1227 | -3268 |
| N - D | 927 | -205 | F - J | 936 | -279 |
| D - L | 1227 | -3268 | J - H | 990 | -1247 |
| E - L | 7536 | -2008 | | | |

**Lumber**
Top chord: 2x12 SP 2400f-2.0E;
Bot chord: 2x10 SP 2400f-2.0E;
Webs: 2x4 SP #2; W3,W5 2x6 SP 2400f-2.0E;
W4 2x6 SP #1;

**Loading**
Truss designed for unbalanced snow loads.
Slope reduction based on Unobstructed Slippery Surface.

**Wind**
Wind loads based on MWFRS with additional C&C member design.
Wind loading based on both gable and hip roof types.
Uplifts based on an elevation at or above 1000 ft.

**Purlins**
In lieu of structural panels use purlins to brace TC @ 24" oc.

See Cleary Building Corp. drawings for bearing attachment and bottom chord bracing details.
This design applies to both open wall and enclosed wall buildings.

04/01/2021

**WARNING** READ AND FOLLOW ALL NOTES ON THIS DRAWING!
**IMPORTANT** FURNISH THIS DRAWING TO ALL CONTRACTORS INCLUDING THE INSTALLERS

Trusses require extreme care in fabricating, handling, shipping, installing and bracing. Refer to and follow the latest edition of BCSI (Building Component Safety Information, by TPI and SBCA) for safety practices prior to performing these functions. Installers shall provide temporary bracing per BCSI. Unless noted otherwise, top chord shall have properly attached structural sheathing and bottom chord shall have a properly attached rigid ceiling. Locations shown for permanent lateral restraint of webs shall have bracing installed per BCSI sections B3, B7, or B10, as applicable. Apply plates to each face of truss and position as shown above and on the Joint Details, unless noted otherwise. Refer to drawings 160A-Z for standard plate positions. Refer to job's General Notes page for additional information.

Alpine, a division of ITW Building Components Group Inc, shall not be responsible for any deviation from this drawing, any failure to build the truss in conformance with ANSI/TPI 1, or for handling, shipping, installation and bracing of trusses. A seal on this drawing or cover page listing this drawing, indicates acceptance of professional engineering responsibility solely for the design shown. The suitability and use of this drawing for any structure is the responsibility of the Building Designer per ANSI/TPI 1 Sec.2.
For more information see these web sites: Alpine: alpineitw.com; TPI: tpinst.org; SBCA: sbcindustry.com; ICC: iccsafe.org; AWC: awc.org

ALPINE ALL-TITE COMPANY
514 Earth City Expressway
Suite 242
Earth City, Missouri 63045

## STRUCTURAL ENDWALL TRUSS

SEQN: 538624 SPEC FROM: MJS | Ply: 1 Qty: 1 | Job Number: 2020107394 | Truss Label: TB53-9ENDWALL35WOH12HEELSEW | Cust: R 7054 JRef:1X4770540008 T2895 DrwNo: 091.21.1452.02810 / DJR 04/01/2021

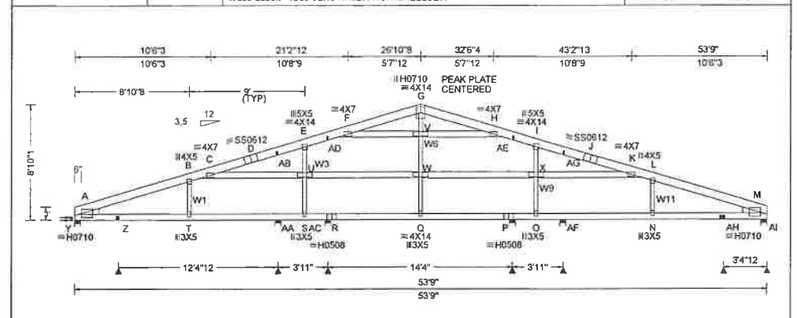


**Loading Criteria** (psf)
TCLL: 20.00
TCDL: 4.00
BCLL: 0.00
BCDL: 5.00
Des Ld: 29.00
NCBCLL: 0.00
Soffit: 2.00
Load Duration: 1.15
Spacing: 60.0 "

**Wind Criteria**
Wind Std: ASCE 7-16
Speed: 115 mph
Enclosure: Closed
Risk Category: II
EXP: C Kzt: NA
Mean Height: 21.40 ft
TCDL: 2.4 psf
BCDL: 3.0 psf
MWFRS Parallel Dist: 0 to h/2
C&C Dist a: 5.38 ft
Loc. from endwall: Any
GCpi: 0.18
Wind Duration: 1.60

**Snow Criteria** (Pg,Pf in PSF)
Pg: 21.0 Ct: 1.2 CAT: II
Pf: 17.8 Ce: 1.0
Lu: 22.5 Ca: 0.98
Snow Duration: 1.15

Building Code:
IBC 2018
TPI Std: 2014
Rep Fac: No
FT/RT/PT:20(0)/10(10)/4(0)
Plate Type(s):
HS, WAVE, 18SS

**Defl/CSI Criteria**
PP Deflection in loc L/defl L/#
VERT(LL): 0.136 N 999 240
VERT(CL): 0.218 N 664 180
HORZ(LL): 0.039 I - -
HORZ(TL): 0.059 B - -
Creep Factor: 2.0
Max TC CSI: 0.780
Max BC CSI: 0.474
Max Web CSI: 1.000

VIEW Ver: 18.02.01A.0205.19

**▲Maximum Reactions (lbs)**

| Loc | Gravity R+ | Gravity /R- | Gravity /Rh | Non-Gravity /Rw | Non-Gravity /U | Non-Gravity /RL |
|---|---|---|---|---|---|---|
| Y | 639 | /- | /- | /268 | /197 | /331 |
| Z | 973 | /- | /- | /531 | /31 | /- |
| Z | 74 | /-111 | /- | /42 | /241 | /- |
| AA | 311 | /- | /0 | /249 | /- | /- |
| AB | 639 | /- | /- | /280 | /328 | /- |
| AC | 190 | /- | /0 | /169 | /- | /0 |
| AD | 1707 | /- | /- | /496 | /511 | /- |
| P | 190 | /- | /0 | /167 | /- | /0 |
| AE | 1707 | /- | /- | /458 | /511 | /- |
| AF | 311 | /- | /0 | /248 | /- | /- |
| AG | 639 | /- | /- | /275 | /328 | /- |
| AH | 973 | /- | /- | /514 | /31 | /- |
| AH | 74 | /-111 | /- | /44 | /241 | /- |
| AI | 639 | /- | /- | /214 | /197 | /- |

Wind reactions based on MWFRS
Y Brg Width = 5.5 Min Req = 1.5
Z Brg Width = 5.5 Min Req = -
Z Brg Width = 1.5 Min Req = -
AA Brg Width = 5.5 Min Req = 1.5
AB Brg Width = 1.5 Min Req = -
AC Brg Width = 5.5 Min Req = 1.5
AD Brg Width = 1.5 Min Req = -
P Brg Width = 5.5 Min Req = 1.5
AE Brg Width = 1.5 Min Req = -
AF Brg Width = 5.5 Min Req = 1.5
AG Brg Width = 1.5 Min Req = -
AH Brg Width = 5.5 Min Req = -
AH Brg Width = 1.5 Min Req = -
AI Brg Width = 5.5 Min Req = 1.5
Bearings AA, AC, P, & AF are a rigid surface.
Bearings Y & AI Fcperp = 565psi.
Members not listed have forces less than 375#

**Maximum Top Chord Forces Per Ply (lbs)**

| Chords | Tens. | Comp. | Chords | Tens. | Comp. |
|---|---|---|---|---|---|
| A - B | 501 | -1483 | G - H | 493 | -1732 |
| B - C | 560 | -1284 | H - I | 622 | -269 |
| C - D | 394 | -184 | I - J | 833 | -68 |
| D - E | 833 | -222 | J - K | 394 | -79 |
| E - F | 622 | -326 | K - L | 560 | -1284 |
| F - G | 493 | -1732 | L - M | 501 | -1483 |

**Maximum Bot Chord Forces Per Ply (lbs)**
Chords Tens. Comp. Chords Tens. Comp.

**Additional Notes**
WARNING: Furnish a copy of this DWG to the installation contractor. Special care must be taken during handling, shipping and installation of trusses. See "WARNING" note below.

**Plating Notes**
Handling stresses not considered for plates. Handling of this truss requires special care by truss manufacturer and installation contractor to prevent plate damage.

**Lumber**
Top chord: 2x8 SP #1;
Bot chord: 2x6 SP 2400f-2.0E;
Webs: 2x6 SP 2400f-2.0E; W1,W3,W9,W11 2x4 SP #2;
W6 2x4 SPF #1/#2;
Lt Wedge: 2x6 SP #1;Rt Wedge: 2x6 SP #1;

**Loading**
Truss designed for unbalanced snow loads.
Slope reduction based on Unobstructed Slippery Surface.

**Wind**
Wind loads based on MWFRS with additional C&C member design.
Wind loading based on both gable and hip roof types.
Uplifts based on an elevation at or above 1000 ft.

**Purlins**
In lieu of structural panels use purlins to brace TC @ 24" oc.

See Cleary Building Corp. drawings for bearing attachment and bottom chord bracing details.
This design applies to both open wall and enclosed wall buildings.

04/01/2021


**WARNING** READ AND FOLLOW ALL NOTES ON THIS DRAWING!
**IMPORTANT** FURNISH THIS DRAWING TO ALL CONTRACTORS INCLUDING THE INSTALLERS

Trusses require extreme care in fabricating, handling, shipping, installing and bracing. Refer to and follow the latest edition of BCSI (Building Component Safety Information, by TPI and SBCA) for safety practices prior to performing these functions. Installers shall provide temporary bracing per BCSI. Unless noted otherwise, top chord shall have properly attached structural sheathing and bottom chord shall have a properly attached rigid ceiling. Locations shown for permanent lateral restraint of webs shall have bracing installed per BCSI sections B3, B7, or B10, as applicable. Apply plates to each face of truss and position as shown above and on the Joint Details, unless noted otherwise. Refer to drawings 160A-Z for standard plate positions. Refer to job's General Notes page for additional information.

Alpine, a division of ITW Building Components Group Inc, shall not be responsible for any deviation from this drawing, any failure to build the truss in conformance with ANSI/TPI 1, or for handling, shipping, installation and bracing of trusses. A seal on this drawing or cover page listing this drawing, indicates acceptance of professional engineering responsibility solely for the design shown. The suitability and use of this drawing for any structure is the responsibility of the Building Designer per ANSI/TPI 1 Sec.2.
For more information see these web sites: Alpine: alpineitw.com; TPI: tpinst.org; SBCA: sbcindustry.com; ICC: iccsafe.org; AWC: awc.org

ALPINE ALL-TITE COMPANY
514 Earth City Expressway
Suite 242
Earth City, Missouri 63045


PROJECT NAME:
BK TRUCKING - BRIAN BEDDO
PROJECT SITE ADDRESS:
1258 SOUTH MULBERRY DRIVE
TOQUERVILLE, UTAH - WASHINGTON COUNTY
BUILDING SIZE:
54'-0"X80'-0"X17'-8"
SHEET NAME:
TRUSS DIAGRAMS

PROJECT NUMBER:
**2020107394**

SHEET NUMBER:
**160**

SHEET SCALE: *NONE*

PROFESSIONAL STRUCTURAL ENGINEER
No. 5181743
MATTHEW BRIAN LAWINGER
STATE OF UTAH
4/24/21


File Name and Path: I:\Commercl\1CAD FILES\2020\2020107394\2020107394-160-TRUSS-1.dwg
Printed By: Michael Waldera Date Printed: 4/23/2021 8:53 AM