# ALPINE CITY COUNCIL PUBLIC MEETING AGENDA

**NOTICE** is hereby given that the **CITY COUNCIL** of Alpine City, Utah will hold a Public Meeting on **Tuesday, May 25, 2021 at 6:00 pm**, 20 North Main Street and can be viewed on the **Alpine City YouTube Channel**. A direct link to the channel can be found on the home page of the Alpine City website: **alpinecity.org** Public Comments may be submitted to **admin@alpinecity.org** by 5:00 pm the day of the meeting.

**I. CALL MEETING TO ORDER**

| | | |
|---|---|---|
| **A.** | **Roll Call** | **Mayor Troy Stout** |
| **B.** | **Prayer:** | **Carla Merrill** |
| **C.** | **Pledge:** | **By Invitation** |

**II. CONSENT CALENDAR**

**A. Approve City Council minutes of May 11, 2021**
**B. Ordinance 2021-13: Adopt Fire and Firework ban/map 2021**
**C. Bond Release #1 The Ridge at Alpine Phase 5: $33,434.13**
**D. Approve On-Site Emergency Generator for Box Elder Booster Pump Station: $58,363**
**E. Resolution No. R2021-11 Consolidated Fee Schedule: Credit Card payments**
**F. Westfield Road Sidewalk Project Design – Wilding Engineering bid: $16,500**

**III. PUBLIC COMMENT**

**IV. REPORTS AND PRESENTATIONS**

**A. Representative Brady Brammer – Question/Answer**

**V. ACTION/DISCUSSION ITEMS**

**A. ACE Disposal Contract and Other Services – 3-year Extension**
**B. Glass Recycling Proposal – Momentum Recycling**
**C. Fence Agreement with Lon Nield – Olde Moyle Mound HOA**
**D. Willow Canyon Height Exception Request – 173 N Bald Mountain Dr.**
**E. Zone Change – 183 N. 100 W. – Aaron Wood with Redwood Dental**
**F. Open Space Purchase Proposal – 539 N Piefferhorn Drive – Michael McArthur**
**G. Ordinance 2021-12: Retaining Walls**
**H. Lambert Park Structure Discussion**

**VI. STAFF REPORTS**

**VII. COUNCIL COMMUNICATION**

**VIII. EXECUTIVE SESSION:** Discuss litigation, property acquisition, or the professional character, conduct or competency of personnel.

Mayor Troy Stout
May 21, 2021

THE PUBLIC IS INVITED TO PARTICIPATE IN ALL CITY COUNCIL MEETINGS. If you need a special accommodation to participate, please call the City Recorder's Office at (801) 756-6347 x 4.
CERTIFICATE OF POSTING. The undersigned duly appointed recorder does hereby certify that the above agenda notice was on the bulletin board located inside City Hall at 20 North Main and sent by e-mail to The Daily Herald located in Provo, UT, a local newspaper circulated in Alpine, UT. This agenda is also available on our web site at, and on the Utah Public Meeting Notices website at www.utah.gov/pmn/index.html

# PUBLIC MEETING AND PUBLIC HEARING ETIQUETTE

**Please remember all public meetings and public hearings are now recorded.**

- All comments **must** be recognized by the Chairperson and addressed through the microphone.
- When speaking to the Planning Commission/City Council, please stand, speak slowly and clearly into the microphone, and state your name and address for the recorded record.
- Be respectful to others and refrain from disruptions during the meeting. Please refrain from conversation with others in the audience as the microphones are very sensitive and can pick up whispers in the back of the room.
- Keep comments constructive and not disruptive.
- Avoid verbal approval or dissatisfaction of the ongoing discussion (i.e., booing or applauding).
- Exhibits (photos, petitions, etc.) given to the City become the property of the City.
- Please silence all cellular phones, beepers, pagers, or other noise making devices.
- Be considerate of others who wish to speak by limiting your comments to a reasonable length and avoiding repetition of what has already been said. Individuals may be limited to two minutes and group representatives may be limited to five minutes.
- Refrain from congregating near the doors or in the lobby area outside the council room to talk as it can be very noisy and disruptive. If you must carry on conversation in this area, please be as quiet as possible. (The doors must remain open during a public meeting/hearing.)

**Public Hearing vs. Public Meeting**

If the meeting is a **public hearing**, the public may participate during that time and may present opinions and evidence for the issue for which the hearing is being held. In a public hearing there may be some restrictions on participation such as time limits.

Anyone can observe a **public meeting**, but there is no right to speak or be heard there - the public participates in presenting opinions and evidence at the pleasure of the body conducting the meeting.

# ALPINE CITY COUNCIL PUBLIC MEETING

on **Tuesday, May 11, 2021**

## I. CALL MEETING TO ORDER

Mayor Troy Stout called the meeting to order at 6:00 p.m. He welcomed everyone to the meeting. He said it was nice to have residents in the audience.

**Roll Call:** The following were present and constituted a quorum.
Carla Merrill, Greg Gordon, Lon Lott, Jessica Smuin and Jason Thelin joined the meeting a few minutes later

Staff: Shane Sorensen, Austin Roy, Chief Brian Gwilliam, Hyrum Bosserman, Bonnie Cooper, Interim Assistant Fire Chief Brian Patten, Jane Griener

Others: Douglas Perry, Gary Laney, Aaron Wood, Clair Merryweather, Darrin Lee, Lon Neal

**Prayer:** Mayor Troy Stout
**Pledge:** Chief Brian Gwilliam

## II. CONSENT CALENDAR

**A. Approve City Council minutes of April 27, 2021**
**B. Resolution No. R2021-09: Interlocal Bookmobile Agreement**
**C. Resolution No. R2021-08: Revised Consolidated Fee Schedule**
**D. Approval to Purchase New John Deere Lawn Mower: $11,580.00**
**E. Bond Release 4 – The Ridge at Alpine Phase 4: $138,385.18**
**F. Pay Request 2 – 800 South Project: $48,574.94**
**G. Partial payment #1 – Water Line Improvement Project: $101,619.60**

Shane Sorensen, City Administrator, said in the consent calendar there were two resolutions one for the Bookmobile Agreement which comes around every year and the other revisions to the Consolidated Fee Schedule. He said the two changes to the Consolidated Fee Schedule were adding retaining wall application fee of $300.00 and street light connection fee of $150.00 per light. He said the city also needs approval from the council to purchase a new John Deere lawn mower which is in the budget.

**Motion:** Lon Lott moved to approve the consent calendar as proposed. Greg Gordon seconded the motion. There were 4 Ayes and 0 Nays, as recorded below. The motion passed unanimously.

| Ayes | Nays |
|---|---|
| Carla Merrill | |
| Jessica Smuin | |
| Greg Gordon | |
| Lon Lott | |

## III. PUBLIC COMMENT

***Gary Laney***
*720 Ridge Dr*

*Gary Laney said he is requesting to build a six-foot fence on the front of his property. The current ordinance allows for a three-foot fence. He believes the way his property lays that it would be beneficial for safety reason to be allowed to put in a higher fence. He home is on a hill and he has finished his landscaping and would like to be able to utilize that part of his property*

Mayor Troy Stout said he visited Gary Laney's property. He said he thinks it is a unique property. He said he thought the property was a good candidate for a variance for safety issue alone. Austin Roy, City Planner, said it is clear to see why Mr. Laney want to do this on the northeast side of his property. Austin Roy said Mr. Laney's home is rather high up on a hill compared to the street level of his tiered front yard. He said it makes sense why Mr. Laney would want privacy and security. He said the fence being put in would be ten feet from the property and six feet made of see-through rod iron fence. *Mr. Laney's said his property is not on a corner lot. He said he had spoken with all his neighbors. He said the neighbors are all in approval of the six-foot fence.* Mayor Troy Stout said the neighbor's fence is four feet off the sidewalk.

DRAFT

Carla Merrill, City Council member asked how long this ordinance (3-foot front yard fence) has been in effect that Mr. Laney wants a variance from. Austin Roy said the fence ordinance has been in effect at least the past ten years. Mayor Troy Stout said it is a good ordinance, but he can see why on this property owner would be making this request. Austin Roy said the ten-foot requirement in the ordinance was because of safety so that fences cannot block the driveway sight line. Mayor Troy Stout asked if the fence was going to be see-through all the way along. *Mr. Laney said yes.* Mayor Troy Stout asked Austin Roy why he did not think this fence would meet the variance criteria. Austin Roy said the City Council had talked about the self-imposed question in a previous meeting when it came to an addition of a porch and how a homeowner would need to meet the five criteria to have a variance. Hyrum Bosserman, City Attorney, said he thinks this would be a good candidate for a variance. Greg Gordon, City Council member, said Mr. Laney's property does not have your typical front yard. Mayor Troy Stout said he believes it is worth requesting a variance. Austin Roy said Mr. Laney will fill out an application. *Mr. Laney said he would get the application back to Austin Roy.*

***Lon Neal (HOA president) & Darrin Lee (Homeowner)***
*Quail Ridge Cir*

*Lon Neal & Darrin Lee live on Quail Ridge Circle an HOA consisting of nine lots. Darrin Lee's home is adjacent to a strip of common area owned by the HOA. Originally there was a six-foot fence located between the HOA strip and Darrin Lee's property. The original fence was allowed because the HOA was only required to put sidewalks down one side of the subdivision. The HOA agrees to let Mr. Lee put a fence to include the strip of common area owned by the HOA if Mr. Lee maintains it. The reason for this request is because the HOA want to preserve the scrub oaks tree that have been there for so many years. If Mr. Lee is required to abide by the city ordinance and come ten feet off the curb the scrub oak trees would need to be removed. Mr. Neal said we are talking about a foot difference from the previous fence. The fence will be rod iron and wood and be see-through.*

Lon Lott, City Council member, said he knows the city has these ordinances but that they are not one size fits all. He said the council could grant an exception and Mr. Lee would not have to go through a variance process. He said he thinks this should go through because it will be cohesive with the rest of the neighborhood. Jessica Smuin, city Council member, asked about the sight triangle. *Darrin Lee said the fence would end 60 -70 feet before hitting the corner.* Jessica Smuin asked if the city had intended for sidewalks to go in there. Austin Roy said the sidewalk is only on the north side and that was the only one planned. Jason Thelin, City Council member, asked if the sidewalks are three feet off the curb. Austin Roy said the subdivision met all ordinances back when the homes were built.

Jason Thelin asked what has changed now that they would need to come in and ask for a variance on this fence. *Mr. Lee said the only thing that has changed since is new neighbors have moved in. He said the original rod iron fence was put in 12 years ago and the other part of the fence which is vinyl was put in 20 years ago. He said the fence it is going from 7 feet to 6 feet back from the curb only because of the vegetation and because of the rock wall.* Shane Sorensen said there are differences between the previous fence issue brought to the council tonight by Mr. Laney and Mr. Lee because this one is on the city right of way (Mr. Lee) and the other is on private property (Mr. Laney). Austin Roy said Craig Hall, City Attorney, said the issue is that it is 10 foot of city right of way because sidewalks are usually put in. Austin Roy said Craig Hall said that the council should not put this through a variance process. Carla Merrill asked the homeowner why not go back 10 feet. *Mr. Lee said the reason he and the HOA did not want to that was because they did not want to get rid of the mature scrub oak.*

Shane Sorensen said it still need to go through a process so that if any other residents come before the city. Jason Thelin asked if the city asked for the funds for the sidewalk. *Mr. Lee said yes*. Jason Thelin said he thinks the council need to make it fair. Shane Sorensen said in the ordinance it says:
**Fences Along Public Open Space and Trails**. See DCA 3.16, DCA 3.16.100 Part 1 and DCA 3.17 and DCA 3.17.100 Part 3,a.

Fences or borders along property lines adjacent to a trail or open space must meet with the City Planner and meet specific standards.

1. When the width of the open space or trail easement is less than 50 feet, bordering fences may not exceed eight (8) feet in height, and shall not obstruct visibility. (Open style fences such as rail fences, field fence, or chain link are preferable.)
2. When the width of the open space or trail easement is 50 feet or more, fence standards as specified elsewhere in this ordinance apply.
3. Fences and hedges must be completely within the boundaries of the private property.
4. Hedges or shrubs must be maintained to the same height requirements as fences.
5. The owner of the fence or hedge must maintain the side facing the open space.

DRAFT

Shane Sorensen said Three Falls is a good example because he knows how much it is to maintain sidewalks and there would not be a lot of foot traffic there and that is why the city did not put in sidewalk there. Mayor Troy Stout said meet with Shane Sorensen and Austin Roy and bring it back to council. Jessica Smuin asked if the maintenance and care of the open space can be recorded to that specific lot. Hyrum Bosserman said with a lease agreement it could be, along with any fence repair. Carla Merrill asked Mr. Lee if he were to put the fence behind the scrub oak, how far back would it be. *Mr. Lee said the fence would have to go back 40 feet.* Mayor Troy Stout said staff can write up an agreement and this will need to come back to City Council.

## IV. REPORTS AND PRESENTATIONS

### A. Financial Report

Shane Sorensen said sales tax is still trending which is good for the city. He said the tentative budget will cover most of the financial report.

## V. ACTION/DISCUSSION ITEMS

### A. FY2022 Tentative Budget

Shane Sorensen said the proposed budget includes $3.205M for capital projects from the general fund and enterprise funds. He said the other budget highlights are included in the budget message at the front of the tentative budget document. He said the final budget is scheduled to be adopted in June 2021. He said the Lone Peak Public Safety Districts tentative budget was accepted by the board at their April 28,2021 Board meeting. He said revenue for the city looks good.

He has included the following into the budget:

- 3% merit increase for employees
- 5.4 % medical insurance increase
- 0.5 % dental insurance increase
- Capital project will roll over to next year
- Equipment replacement schedule five years plan – each item shows its life span
- Buy one new pickup truck
- Buy ten-wheel dump truck
- Street sweeper lease/purchase $50,000 which is in the next budget year
- Two part-time positions 20 hours a week to help with open space/trails, recreation, and human resources
- Solid waste increase for ACE 1.4 %
- Increase garbage rates for residents by $0.25 per can
- Pressurized Irrigation rate study - first draft by June
- Emergency service 1.22% fire department and 1.65%police department - the budget amendment needs both City's (Highland & Alpine) Councils to approve if that will be necessary.
- American Recovery Act (ARC)funds – will be received over a two-year period. The city will be receiving more details, but Alpine City will add it in to the budget it will be $1.17 Million. This will be added later with a budget amendment
- Proposed projects: street maintenance plan for overlays with a five-year plan
- Spend more money on the community street maintenance for chip seal and overlay projects, instead of projects like Pioneer Drive and 800 South. The street projects will take place July and September for $200,000
- Westfield Road sidewalk project
- Pressurized Irrigation improvement monitoring system to alert staff of any issues
- Alpine Cove Road fire emergency plan and fire safety project this summer
- Tree trimming
- Sewer improvements – concrete around manholes
- Storm drain improvements – get rid of cross gutters because it deteriorates the asphalt
- Fire station remodel will take place as soon as a new chief is on board - first getting an architect $585,000 and possibly a bond if needed
- Round-a-bout beautification project
- Burgess Park pavilion on the south end
- Pickleball next year's budget
- Open space/park improvements

DRAFT

- Three Falls flow trails: Shane Sorensen asked the council if they want to tackle all of them this year. Mayor Troy Stout said he believe that two would be done this year. Carla Merrill said she did not believe there would be room for three trails. Shane Sorensen said the city will be working on a parking lot up by the pond in Three Falls.
- Legacy park project Main Street flower project. Mayor Troy Stout said this will be phase one in getting the flower project started. Shane Sorensen said he is planning on asking Main Street businesses to participate in the flowerpot and hanging basket project also.

Shane said the budget stays about the same as last year. He said the only changes are the project the city will be doing. However, it is sometimes difficult to manage that many projects at the same time.

Jason Thelin asked for a break down on employee's total costs where the city is not spreading them across multiple areas. He said he was assuming this would include overtime being paid and if they are being paid on other committees. He asked if he could get a copy of 2020 overtime paid because that seems to fluctuate. He asked if the city had a running total of 2021 overtime being paid out per employee. Shane Sorensen said, yes. Mayor Troy Stout requested page numbers be put on the budget. Jessica Smuin said she thought it was a good tentative budget and appreciates all the time Shane Sorensen has put into it. Carla would like the same information that Jason Thelin wants. Lon Lott asked in regard to increase on the solid waste, does the council need to have a separate motion to change the consolidated fee schedule or is that already in the fee schedule. Shane Sorensen said he would bring the solid wastes increase back to the council in a resolution before July 1st. Greg Gordon asked if the Lone Peak Public Safety District budget with the benefit cost increase of roughly 10% this would be coming back yearly and is not sustainable year after year.

**Motion:** Lon Lott moved to approve Resolution No. R2021-11 accepting the FY2022 Tentative Budget and set as proposed and set a public hearing for June 8th for the final budget as well as this tentative budget does reflect the change in the Lone Peak Public Safety District budget included the approval of the Lone Peak Public Safety District budget as part of the tentative budget. Jessica Smuin seconded the motion. There were 5 Ayes and 0 Nays, as recorded below. The motion passed unanimously.

| Ayes | Nays |
|---|---|
| Carla Merrill | |
| Jessica Smuin | |
| Greg Gordon | |
| Jason Thelin | |
| Lon Lott | |

**B. Approval of Lone Peak Public Safety District Budget**

This budget was approved in the **Motion** with Resolution No. R2021-11 above.

**C. Retaining Wall Exception: 79 S Lone Peak Dr., Clair Merryweather**

Austin Roy said Clair Merryweather is seeking an exception to the retaining wall ordinance. He said Mr. Merryweather would like to be able to place a two-tiered retaining wall closer together than the ordinance permits. Austin Roy said each tier of the wall would not exceed four (4) feet in height. He said the proposed gap between walls would be three (3) feet measured from the front face of the lower wall to the front face of the upper wall. He said the ordinance requires a two (2) foot gap between walls and is measured from the back edge of the lower wall to the front face of the upper wall.

Austin Roy said according to 3.32.020.1 of the Alpine City Development Code exceptions may be granted to the Retaining Wall Ordinance:
*"The City Council may grant an exception from these standards. Prior to the City Council considering the exception, the City Engineer shall submit a written recommendation to the Planning Commission. The recommended exception shall be based on generally accepted engineering practices. The Planning Commission shall review the recommendation and advise the City Council as to whether or not the exception should or should not be granted."*

Austin Roy said engineering recommends approval of the request for the owner to build a tiered retaining wall system (rock or verti-block) spaced three (3) feet apart, as measured from the front faces of each wall. No wall can be taller than four (4) in exposed height when complete. He said on top of the verti-block allows for planting which is what the city is wanting from the ordinance. He said the applicant may do a rock wall, but it still would allow for planting according to Jed Muhlestein, City Engineer.

DRAFT

Austin Roy said on May 4, 2021 the Planning Commission reviewed the exception request and determined that that an exception should be granted for Mr. Merryweather. The motion is as follows:

***MOTION:*** *Commission Member Ethan Allen moved to recommend approval of the request for the owner to build a tiered retaining wall system (rock or verti-block) spaced three (3) feet apart, as measured from the front face of each wall. No wall can be taller than four (4) in exposed height when complete. 1. Condition that all ordinances are met. Troy Slade seconded the motion. There were 6 Ayes and 0 Nays (recorded below). The motion passed.*

| ***Ayes:*** | ***Nays:*** |
|---|---|
| *Jane Griener* | *none* |
| *John MacKay* | |
| *Ethan Allen* | |
| *Ed Bush* | |
| *Sylvia Christiansen* | |
| *Troy Slade* | |

Lon Lott said he did not think the tiered walls were going to be four feet. Austin Roy said Mr. Merryweather will be installing two tiers each four-feet high. He said Mr. Merryweather is doing that so that he will not have to submit any engineering plans. Lon Lott said the retaining wall will not infringe on any of his neighbors. Carla Merrill asked if it is a verti-block she would be ok with that. She said if the retaining wall is made with rock the property owner should go by the ordinance. Austin Roy said the rocks would get larger as they go up his property. He said he and Jed Muhlestein, City Engineer, agreed that the verti block would be best. Lon Lott said the house hides the retaining wall. He said the homeowner is also putting up a fence that would hide it. Jason Thelin asked if the city is going to be required the homeowner to plant in the wall or does the city care. Austin Roy said the Planning Commission made that part of their motion. He said the property owner would need to plant in the retaining wall. He said that is why the ordinance was made in the first place so that residents were required to plant in retaining walls. He said in the city we had a visible 50-foot retaining wall that had no vegetation. Carla Merrill asked if Lon Lott wanted to amend his motion to say only verti-block could be used. Lon Lott said no because it was not going to be seen by neighbors.

**Motion:** Lon Lott moved to approve the request to build a tiered retaining wall system (rock or verti-block) spaced three feet apart, as measured from the front faces of each wall, with no wall being taller than four feet in exposed height when complete with a condition that all other retaining wall ordinances be met. Greg Gordon seconded the motion. There were 5 Ayes and 0 Nays, as recorded below. The motion passed unanimously.

| Ayes | Nays |
|---|---|
| Carla Merrill | |
| Jessica Smuin | |
| Greg Gordon | |
| Jason Thelin | |
| Lon Lott | |

**D. Setback Exception: Alpine View Estates Lot 12 & 13**

Austin Roy said Douglas Perry due to the odd shape of Lot 12 & 13 of Alpine View Estates, an exception is being requested for the setbacks on the south and east sides of the lot. He said the Planning Commission approved the preliminary plat of Alpine View Estates with a 30-foot setback to the south and a 15-foot setback to the east. He said the owner of the lot has had a new home designed with those setbacks in mind. Article 3.01.110 of the Alpine City Development Code defines a Rear Yard as:

*"A space between the back wall of the nearest main building extending the full width of the lot and the lot line that is most distant from, and is most nearly parallel with, the front lot line."* and *"The depth (or setback) of the rear yard is the minimum distance between the rear lot line and the rearmost part of the primary structure of the nearest main building at the foundation level."*

Alpine View Estates is a Planned Residential Development (PRD), and as such, the City Council may grant exceptions for setbacks following a recommendation from Planning Commission and "*…upon a finding that such exception is appropriate for the proper development of the lot and that the exception will not result in the establishment of a hazardous condition"* (3.09.060.4.d).

He said staff recommends that the proposed exception be granted on the basis that the proposed setbacks were shown and approved by the Planning Commission at preliminary, and the lot borders open space where a reduced

setback to the east would not directly impact a neighboring resident. He said the exception would not result in the establishment of a hazardous condition. He said the homeowner wants to get the setbacks approved.

He said on May 4, 2021, the Planning Commission reviewed the proposed request and recommended that an exception be granted. The motion is as follows:

***MOTION:*** *Commission Member Ed Bush moved to recommend that an exception be granted for a 30-foot south side setback be approved for Lot 12 and 13 of Alpine View Estates as requested by the applicant. Ethan Allen seconded the motion. There were 6 Ayes and 0 Nays (recorded below). The motion passed.*

| ***Ayes:*** | ***Nays:*** |
|---|---|
| *Ed Bush* | |
| *Ethan Allen* | |
| *John MacKay* | |
| *Jane Griener* | |
| *Sylvia Christiansen* | |
| *Troy Slade* | |

Greg Gordon asked what the setbacks will be on this lot. Austin Roy said they will be 30-foot south side setback and 15 feet to the east rear setback for lot 13 and likewise for lot 12.

**Motion:** Greg Gordon moved that an exception be granted and that a 30-foot south side setback and a 15-foot east rear setback be approved for lot 12 & 13 of Alpine View Estates as requested by the applicant. Jessica Smuin seconded the motion. There were 5 Ayes and 0 Nays, as recorded below. The motion passed unanimously.

| Ayes | Nays |
|---|---|
| Carla Merrill | |
| Jessica Smuin | |
| Greg Gordon | |
| Jason Thelin | |
| Lon Lott | |

**VI. EXECUTIVE SESSION:** Held

**Motion:** Carla Merrill moved to adjourn to executive session to discuss litigation. Lon Lott seconded the motion. There were 5 Ayes and 0 Nays, as recorded below. The motion passed unanimously.

| Ayes | Nays |
|---|---|
| Carla Merrill | |
| Jessica Smuin | |
| Greg Gordon | |
| Jason Thelin | |
| Lon Lott | |

Adjourned to Executive Session at 8:08 p.m.

**Motion:** Greg Gordon moved to return from Executive Session to City Council meeting. Jessica Smuin seconded the motion. There were 5 Ayes and 0 Nays, as recorded below. The motion passed unanimously.

| Ayes | Nays |
|---|---|
| Carla Merrill | |
| Jessica Smuin | |
| Greg Gordon | |
| Jason Thelin | |
| Lon Lott | |

Returned to City Council meeting at 8:1 p.m.

**V.(Cont.) ACTION/DISCUSSION ITEMS**

**E. Ordinance 2021-11: Guest House Approval**

DRAFT

Austin Roy said the guest house will be approved on 5-acre lots only. city recently adopted a new ordinance to allow exceptions to be granted for additional large animals on lots over 5-acres in size. He said in being consistent with this change, staff is recommending that guest houses, a conditional use on lots over 5-acres in size, be approved by City Council as well. He said the idea being that all exceptions, and special uses on large lots should be approved by a single entity for the sake of consistency. He said the remaining larger lots are in the Three Falls area.

He said staff recommends that the conditional use of guest houses be approved by the City Council.

Austin Roy said on May 4, 2021, the Planning Commission has reviewed this proposed change and recommends that it be approved. The motion is as follows:

***MOTION:*** *John MacKay moved to recommend that Ordinance 2021-11 Guest House be approved as proposed. Ed Bush seconded the motion. There were 6 Ayes and 0 Nays (recorded below). The motion passed unanimously.*

| ***Ayes:*** | ***Nays:*** |
|---|---|
| *Jane Griener* | *None* |
| *Ed Bush* | |
| *John MacKay* | |
| *Ethan Allen* | |
| *Sylvia Christiansen* | |
| *Troy Slade* | |

Carla Merrill said she thinks its fine to have Planning Commission make this decision, because they are not political. Mayor Troy Stout asked how many five acre lots. Shane Sorensen said he was not sure. He said there are (Dry Creek and Long Drive) some in Three Falls and handful throughout the rest of the city. Austin Roy said in four years he has worked for the city only one resident on the westside of town that has met the requirements. Mayor Troy Stout said he thought that just off Preston there may be some five acre lots still left. Shane Sorensen said that the lots off Preston could be that big, but they may be tied up in conservation areas.

Jessica Smuin asked with very few of these requests coming to the city what caused the fine tuning to the ordinance and why have the City Council be the body to approve this. Austin Roy said because a resident from Three Falls came into the city with a request to build a guest house on the property. Austin Roy said the resident was on five acres but because of their CC&R (Covenants, Conditions & Restrictions) with the HOA (Homeowners Association) limited what the resident in Three Falls could do. He said it got the city thinking if the city wanted these decisions to be made at a Planning Commission level or at the City Council level. He said this conditional permit was brought up in one of the council communications and the idea to change this came from there. Shane Sorensen said there are not many ordinances where in the final decisions is left up to the Planning Commission to make. He said almost all final decisions in any ordinance are made by the City Council.

Austin Roy said services such as water and sewer connections to the guest house need to be the same as the main house. Carla Merrill said if a resident has CC&R (Covenants, Conditions & Restrictions), the resident must comply with that. She said the City Council will not be able to grant a change with that in effect. Shane Sorensen said there are a list of requirements, but it is still up to discretionary decision.

Jason Thelin said he is in favor of having the City Council having the final decision. He said the Planning Commission is a non-elected body. Mayor Troy Stout said the city has had one family that wants to tear down their main house and live in their pool house and promise to not use their pool house as a guest home later. Austin Roy said when anyone that calls him requesting to build a guest home on their property, the first thing he asks is if they are on a 5-acre lot. Jason Thelin said he believe the governing body should be ones making the last decision that is why we were elected.

**Motion:** Lon Lott moved that Ordinance 2021-11 be approved as proposed. Jason Thelin seconded the motion. There were 5 Ayes and 0 Nays, as recorded below. The motion passed unanimously.

| Ayes | Nays |
|---|---|
| Carla Merrill | |
| Jessica Smuin | |
| Greg Gordon | |
| Jason Thelin | |
| Lon Lott | |

DRAFT

**F. Final Approval of Lambert Park Trail Signs**

Shane Sorensen said the staff have been working for several months with Ginger Belnap with Meadowbrook Design to complete the design for the Lambert Park trail maps. He said the maps have gone through multiple iterations to get to the final product. He said the structures with maps are being planned for four area throughout Lambert Park, with a fifth location being at the new pavilion that will be constructed east of the cell tower. He said a quote has been obtained from Smith Steelworks for the structures. He said the design of the structure is rusted metal to blend in with the landscape, with the structures being built to last. He said the structures will cost $8,190 each, or a total of $40,950 for five structures. He said several options were obtained for the maps, including the following:

- Sublimated Metal Print: 1/8" ACM with sublimated print. This option includes paint on metal for the map surface. $531.63/sign. Total ten signs $5,316.30. Graffiti resistant but worry about a knife
- 3M HP vinyl printed: This option includes a printed adhesive vinyl on ACM. $231.60/sign. Total ten signs $2,316.00.
- High Visibility Overlay Film on Aluminum Sheeting. $108/sign. This type of sign is the same as our street signs. Total ten signs $1,080.00.

Shane said the city could have one of the High Visibility Overlay signs for $108 to look at it. He said eventually the signs will all fade over time, but they will be less expensive to replace than the other types of signs. He said he is not as familiar with the first option as the last option**.**

**Motion:** Lon Lott moved five rusted structures and print one High Visibility overlay film on aluminum sheeting for $108.that the proposed trail map signage for Lambert Park be approved, including the design for the structures. The trail maps with be the option number (3) High Visibility Overlay Film on Aluminum Sheeting for $108. Greg Gordon seconded the motion. There were 5 Ayes and 0 Nays, as recorded below. The motion passed unanimously.

| Ayes | Nays |
|---|---|
| Carla Merrill | |
| Jessica Smuin | |
| Greg Gordon | |
| Jason Thelin | |
| Lon Lott | |

## VII. STAFF REPORT

Austin Roy
Lambert Park signs - final draft are in the conference room

Montdella Senior Living – The property owner is requesting an approval to change the brick that was approved. The brick they had wanted is no longer made. There are five brick color options to choose from in the conference room. They also would like approval to have stucco trim instead of concrete around the doors and archways of each townhome unit. Greg Gordon asked why the property owner is making all the requests at this time. Austin Roy said the concrete company has gone out of business. Jessica Smuin asked if the property owner could come back with an alternative option to stucco. Mayor Troy Stout said stucco was not part of the city's approval process of the historic gateway. He said the cement trim was a big part of the look of the townhomes and this would be a big compromise. He said maybe the city can give him a recommendation of another company. Austin Roy said he would let the property owner know what the direction the council would like the property owner to go in.

Shane Sorensen
Bollards at Lambert Park update - arrived yesterday and have started to be installed today at Lambert Park. There are six on both ends of the Park. The Bollards have been spaced so that a fire truck would go right over them. Cameras on bollards will be ordered this week.

Google/Apple Maps update - Jed Muhlestein said that google maps and apple maps have updated their maps again as of yesterday. Cameras on bollards will be ordered this week.

Pavilion at Lambert Park update – With the approval from City Council the pavilion was fabricated. Shane Sorensen suggested taking a field trip up to Lambert Park for the council to pick a spot for the pavilion to be placed. Greg Gordon suggested filling in the fence in the area. Mayor Troy Stout suggest going on Friday to pick a spot to put the structure. He said he would like to block the entrance to the trail head with the structure.

Lone Peak Public Safety District Meeting - Reminded everyone about meeting next week on May 26th. This week's meeting was canceled.

DRAFT

800 South project update – Curb and gutter going in this week. This project nearly completed.

Water Project update - This project is going quicker than expected.

Trees at Creekside Park – There are dozen trees dead from slack lining on trees at Creekside Park. Jason Thelin suggested putting up more signs and putting another notice in the Newsline. Shane Sorensen said some slackliners have complain that the slacklining poles are not far enough apart. He said staff will find out how far apart they need to be.

## VIII. COUNCIL COMMUNICATION

Jessica Smuin
She asked if Lakeview Drive would be able to get internet with Xfinity. Mayor Troy Stout said one of the ARC (American Recovery Act) funds were having internet access to all citizens, especially school age children. Shane Sorensen said he does not know if the city has the power or authority to make Comcast have internet available to all areas. Carla Merrill suggested looking at Skylink Wireless internet service.

Greg Gordon
He said to Jessica Smuin's point, potentially the city could look at these funds laying out fiber optic infrastructure throughout the city and let residents take it from there. The city has telephone poles throughout the city infrastructure to get internet. Mayor Troy Stout said because of COVID-19 crisis if a child could not go to school, they need to maintain internet access. Greg Gordon said internet companies could use phone poles or while the city is doing maintenance on waterlines they could use that as an opportunity to do installation. He said people here would be delighted to have access. Shane Sorensen said the city has an agreement with Utah Broadband wanted to put a repeater on top of the water tanks to expand service. Austin Roy said it would be treated as any other antenna and so if the council would like that, staff would need approval from the council to open that up as an option. Carla Merrill prefers fiber optics so that weather is not a worry with internet interruption.

Mayor Troy Stout
He said he talked with Shane about green waste. The city has been able to keep our tipping fees lower. He said if you go to the dump they add fees for everything. The city has talked about setting up five dumpsters throughout the community twice a year for yard cleanup. Neighbors could get together and rent a dumpster and we could subsidize it. The city could subsidize a dump pass like the city does with the library cards. He said the council needs to put it on another agenda. He said the city needs to find a solution for solid waste and green waste.

Red curbs need to be repainted right away by the parks department. Shane Sorensen said some of residents on Long Drive might be willing to help if the city supplies the paint.

**Motion:** Carla Merrill moved to adjourn. Lon Lott seconded the motion. There were 5 Ayes and 0 Nays, as recorded below. The motion passed unanimously.

| Ayes | Nays |
|---|---|
| Carla Merrill | |
| Jessica Smuin | |
| Greg Gordon | |
| Jason Thelin | |
| Lon Lott | |

Adjourned at 9:01 p.m.

DRAFT

# ALPINE CITY COUNCIL AGENDA

**SUBJECT:** **Ordinance No. 2021-13 – An Ordinance Adopting Restrictions on the Use of Fireworks Within Certain Areas of Alpine City**

**FOR CONSIDERATION ON:** **25 May 2021**

**PETITIONER:** **City Staff**

**ACTION REQUESTED BY PETITIONER:** **Review the proposed ordinance regarding the restriction and use of fireworks in the City.**

**BACKGROUND INFORMATION:**

With the severe drought conditions we are facing, we have worked with our City Attorney Craig Hall on an ordinance that adopts the fire restriction map for 2021, in addition to clarifying enforcement and penalties for violation of the ordinance. One point of discussion to consider is the expiration date of the restrictions. As written, the restrictions would expire September 30, 2021. This date can be amended as the Council sees necessary, or by a future vote of the Council, the period of restriction could be extended.

**STAFF RECOMMENDATION:**

**SAMPLE MOTION TO APPROVE:**
I move to approve Ordinance 2021-13 adopting restrictions on the use of fireworks within certain areas of Alpine City.

**FIRE RESTRICTIONS EFFECTIVE 5/25/21:**

**- NO FIREWORKS IN CITY PARKS**

**- NO FIREWORKS WITIN 200' OF ANY STREAM BED**

**- ALL FIREWORKS ARE PROHIBITED IN THE AREAS DESIGNATED "FIREWORKS BAN 2021" AS SHOWN ON THIS MAP**

**- FOR THE UNMARKED AREA WITHIN CITY LIMITS, FOLLOW STATE LAWS REGARDING FIREWORKS**

**- FOR AREAS OUTSIDE THE CITY LIMITS, PLEASE REFER TO THE APPROPRIATE GOVERNING BODY FOR FIRE / FIREWORKS REGULATIONS**

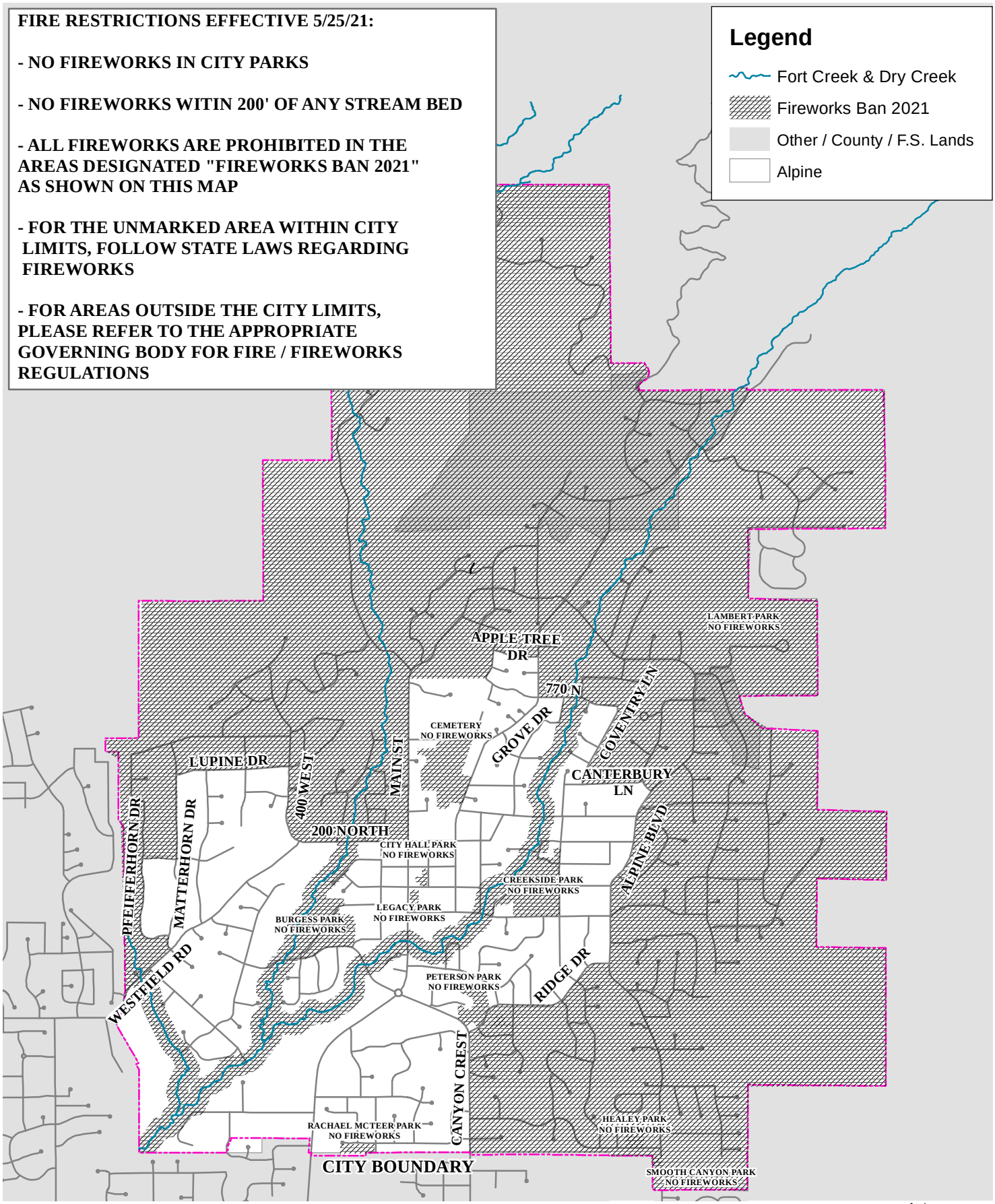


# EXHIBIT A
# FIRE RESTRICTIONS 2021

ALPINE CITY
ESTABLISHED 1850

N

ADOPTED BY ALPINE CITY COUNCIL 5-25-2021

**ALPINE CITY**

**ORDINANCE NO. 2021-13**

**AN ORDINANCE ADOPTING RESTRICTIONS ON THE USE OF FIREWORKS WITHIN CERTAIN AREAS OF THE ALPINE CITY**

**WHEREAS**, in 2011 the Utah Legislature modified the State law by amending the types of fireworks that may be discharged in Utah; and

**WHEREAS**, in 2018 State law changed the dates allowed for discharge; and

**WHEREAS**, there currently is, and may be in the future, an extreme high risk of fire during the times when fireworks are allowed to be discharged; and

**WHEREAS**, the District's Fire Marshall has recommended that fireworks be prohibited in the certain areas of the City which present unique hazards for the ignition of trees significant challenges in fighting fires; and

**WHEREAS,** the City Council finds it is in the best interest of the municipality and the general health, safety and welfare of the public that this Ordinance should be passed.

**NOW, THEREFORE, BE IT ORDAINED BY THE GOVERNING BODY OF THIS MUNICIPALITY AS FOLLOWS:**

**1. Definition**. All terms relating to fireworks used in this ordinance shall have the same meaning as they are defined in *Utah Code Ann.* § 53-7-202 of the Utah Fire Prevention Act.

**2. Sale, Discharge and Possession of Certain Fireworks Restricted.**

a. It is unlawful for any person to sell or offer for retail sale, to ignite, or to discharge, or to have in their possession any fireworks in this municipality, other than class C common Utah State approved explosives used in accordance with, and only on the dates allowed, by *Utah Code Ann.* § 53-7-220 through 225; the rules adopted pursuant thereto; and this Ordinance, except as otherwise permitted by State law;

b. Pursuant to *Utah Code Ann.* § 55-5-202.5; due to unusually extreme hazardous fire conditions in certain portions of the municipality, the discharge of any and all fireworks is prohibited within those certain areas of the City more particularly identified on "Exhibit A", attached hereto and incorporate herein by reference.

**3. Public Displays.** This ordinance and restrictions contained herein do not apply to the City's Alpine Days celebration because of adequate fire prevention preparations.

**4. Enforcement.**

a. Every officer charged with enforcement of State and municipal laws, including the Fire Marshal, is hereby charged with the responsibility to enforce this Ordinance;

b. Fireworks possessed, sold or offered for sale in violation of this Ordinance may be seized and destroyed and the license of the person selling or offering fireworks for sale may be revoked.

**5. Punishment.** Violation of this Ordinance shall be a Class B misdemeanor punishable by both fine and imprisonment as set forth in Utah law.

**6. Effective Date**. This Ordinance shall take effect immediately upon passing and shall expire unless extended by an affirmative vote of the City Council at 11:59 p.m. on September 30, 2021.

**PASSED AND APPROVED** this ___ day of May, 2021

By:_____
Troy Stout, Mayor

**[SEAL]**

**VOTING:**

| | |
|---|---|
| Greg Gordon | Yea ____Nay ____ |
| Lon Lott | Yea ____Nay ____ |
| Carla Merrill | Yea ____Nay ____ |
| Jessica Smuin | Yea ____Nay ____ |
| Jason Thelin | Yea ____Nay ____ |

**ATTEST:**

_____
Bonnie Cooper
City Recorder

**DEPOSITED** in the office of the City Recorder this ___ day of May, 2021.

**RECORDED** this ___ day of May, 2021.

**Exhibit "A"**

**Areas Restricted for Use of Fireworks**

**ALPINE CITY**
**BOND RELEASE FORM**
*Release No. 1*

Thru Period Ending: April 30, 2021

**BOND HOLDER**

**The Ridge At Alpine Phase 5**
*Location: North Zachary Way*

| Item # | Description | Quantity | Units | | Unit Price | Total Cost | % Completed This Period** | % Completed To Date** | Total This Period |
|---|---|---|---|---|---|---|---|---|---|
| 10 | Stabilized Construction Entrance | 2 | EACH | @ | $ 3,000.00 | $ 6,000.00 | 0.0% | 0.0% | $ - |
| 20 | Silt Fence | 1872 | LF | @ | $ 2.75 | $ 5,148.00 | 0.0% | 0.0% | $ - |
| 30 | Curb Inlet Protection | 14 | EACH | @ | $ 300.00 | $ 4,200.00 | 0.0% | 0.0% | $ - |
| 40 | Toilet Rental | 5 | MO | @ | $ 500.00 | $ 2,500.00 | 20.0% | 20.0% | $ 500.00 |
| 50 | Slope Stabilization (reseeding disturbed areas) | 180000 | SF | @ | $ 0.19 | $ 34,200.00 | 0.0% | 0.0% | $ - |
| 60 | Concrete Washout | 1 | LS | @ | $ 1,000.00 | $ 1,000.00 | 0.0% | 0.0% | $ - |
| 70 | Mobilization | 1 | LS | @ | $ 10,000.00 | $ 10,000.00 | 95.0% | 95.0% | $ 9,500.00 |
| 80 | Clear and Grub | 8700 | SF | @ | $ 0.50 | $ 4,350.00 | 60.0% | 60.0% | $ 2,610.00 |
| 90 | Connect to Existing Sewer | 2 | EACH | @ | $ 750.00 | $ 1,500.00 | 0.0% | 0.0% | $ - |
| 100 | 8" PVC SDR 35 Sewer Main | 2340 | LF | @ | $ 36.00 | $ 84,240.00 | 0.0% | 0.0% | $ - |
| 110 | 48" Sanitary Sewer Manhole | 13 | EACH | @ | $ 3,250.00 | $ 42,250.00 | 0.0% | 0.0% | $ - |
| 120 | 4" PVC Sanitary Sewer Lateral | 29 | EACH | @ | $ 1,200.00 | $ 34,800.00 | 0.0% | 0.0% | $ - |
| 130 | Connect to Existing Storm Drain | 3 | EACH | @ | $ 750.00 | $ 2,250.00 | 0.0% | 0.0% | $ - |
| 140 | 15" RCP Storm Drain Pipe | 2000 | LF | @ | $ 42.00 | $ 84,000.00 | 0.0% | 0.0% | $ - |
| 150 | 30" Storm Drain Pipe | 560 | LF | @ | $ 84.00 | $ 47,040.00 | 0.0% | 0.0% | $ - |
| 160 | 60" Storm Drain Manhole | 15 | EACH | @ | $ 3,350.00 | $ 50,250.00 | 0.0% | 0.0% | $ - |
| 170 | Curb Inlet Box/Storm Drain Cleanout Box | 11 | EACH | @ | $ 2,950.00 | $ 32,450.00 | 0.0% | 0.0% | $ - |
| 180 | Combo Box | 1 | EACH | @ | $ 6,500.00 | $ 6,500.00 | 0.0% | 0.0% | $ - |
| 190 | 4X4 Storm Drain Box | 1 | EACH | @ | $ 6,500.00 | $ 6,500.00 | 0.0% | 0.0% | $ - |
| 200 | 30" End Section With Trash Rack, Rip Rap, and Swell Grading | 1 | LS | @ | $ 12,500.00 | $ 12,500.00 | 0.0% | 0.0% | $ - |
| 210 | Connect to Existing Waterline | 2 | EACH | @ | $ 3,550.00 | $ 7,100.00 | 0.0% | 0.0% | $ - |
| 220 | 8" PVC C900 DR18 Culinary Waterline | 1330 | LF | @ | $ 32.00 | $ 42,560.00 | 0.0% | 0.0% | $ - |
| 230 | 12" PVC C900 DR18 Culinary Waterline | 1590 | LF | @ | $ 45.50 | $ 72,345.00 | 0.0% | 0.0% | $ - |
| 240 | 8" CW Bend | 4 | EACH | @ | $ 850.00 | $ 3,400.00 | 0.0% | 0.0% | $ - |
| 250 | 12" CW Bend | 4 | EACH | @ | $ 1,100.00 | $ 4,400.00 | 0.0% | 0.0% | $ - |
| 260 | 12" CW Tee | 2 | EACH | @ | $ 1,500.00 | $ 3,000.00 | 0.0% | 0.0% | $ - |
| 270 | 8" Gate Valve | 2 | EACH | @ | $ 1,950.00 | $ 3,900.00 | 0.0% | 0.0% | $ - |
| 280 | 12" Gate Valve | 4 | EACH | @ | $ 2,500.00 | $ 10,000.00 | 0.0% | 0.0% | $ - |
| 290 | Fire Hydrant | 6 | EACH | @ | $ 5,500.00 | $ 33,000.00 | 0.0% | 0.0% | $ - |
| 300 | Temp Blowoff | 1 | EACH | @ | $ 1,750.00 | $ 1,750.00 | 0.0% | 0.0% | $ - |
| 310 | 1" CTS Poly Culinary Services | 29 | EACH | @ | $ 1,375.00 | $ 39,875.00 | 0.0% | 0.0% | $ - |
| 320 | Connect to Pressurized Irrigation Line | 2 | EACH | @ | $ 3,550.00 | $ 7,100.00 | 0.0% | 0.0% | $ - |
| 330 | 6" PVC C900 DR18 Pressurized Irrigation Line | 2650 | LF | @ | $ 28.00 | $ 74,200.00 | 0.0% | 0.0% | $ - |
| 340 | 6" PI Bend | 8 | EACH | @ | $ 750.00 | $ 6,000.00 | 0.0% | 0.0% | $ - |
| 350 | 6" PI Tee | 1 | EACH | @ | $ 1,250.00 | $ 1,250.00 | 0.0% | 0.0% | $ - |
| 360 | 6" Gate Valve | 3 | EACH | @ | $ 1,850.00 | $ 5,550.00 | 0.0% | 0.0% | $ - |
| 370 | 1" CTS Poly PI Services | 29 | EACH | @ | $ 1,300.00 | $ 37,700.00 | 0.0% | 0.0% | $ - |
| 380 | PI Air Vac | 1 | EACH | @ | $ 3,950.00 | $ 3,950.00 | 0.0% | 0.0% | $ - |
| 390 | Rough Grade Native Sub-Grade | 162920 | SF | @ | $ 0.20 | $ 32,584.00 | 0.0% | 0.0% | $ - |
| 400 | 24" Curb & Gutter Prep (6" Road Base) | 5280 | LF | @ | $ 5.00 | $ 26,400.00 | 0.0% | 0.0% | $ - |
| 410 | 24" Curb and Gutter APWA Type A | 5280 | LF | @ | $ 14.50 | $ 76,560.00 | 0.0% | 0.0% | $ - |
| 420 | 9" Road Base | 93825 | SF | @ | $ 1.00 | $ 93,825.00 | 0.0% | 0.0% | $ - |
| 430 | 3" Hot Mix Asphalt | 93825 | SF | @ | $ 1.65 | $ 154,811.25 | 0.0% | 0.0% | $ - |
| 440 | Sidewalk Prep (6" Road Base) | 26395 | SF | @ | $ 0.95 | $ 25,075.25 | 0.0% | 0.0% | $ - |
| 450 | Concrete Sidewalk (4' Wide X 5" Thick) | 26395 | SF | @ | $ 5.25 | $ 138,573.75 | 0.0% | 0.0% | $ - |
| 460 | ADA Ramp | 4 | EACH | @ | $ 1,400.00 | $ 5,600.00 | 0.0% | 0.0% | $ - |
| 470 | Concrete Valve Collars | 14 | EACH | @ | $ 500.00 | $ 7,000.00 | 0.0% | 0.0% | $ - |
| 480 | Concrete Manhole Collars | 29 | EACH | @ | $ 600.00 | $ 17,400.00 | 0.0% | 0.0% | $ - |
| 490 | Dry Utilities- Per Lot Budget (Remaining 13 Lots) | 29 | EACH | @ | $ 6,500.00 | $ 188,500.00 | 0.0% | 0.0% | $ - |
| 500 | Sanitary Sewer - Trech Backfill | 7650 | TON | @ | $ 13.50 | $ 103,275.00 | 0.0% | 0.0% | $ - |
| 510 | Storm Drain - Trench Backfill | 2810 | TON | @ | $ 13.50 | $ 37,935.00 | 0.0% | 0.0% | $ - |
| 520 | Culinary Water- Trench Backfill | 3140 | TON | @ | $ 13.50 | $ 42,390.00 | 0.0% | 0.0% | $ - |
| 530 | Pressurized Irrigation-Trench Backfill | 1520 | TON | @ | $ 13.50 | $ 20,520.00 | 0.0% | 0.0% | $ - |
| 540 | Mail Box and Pad - (4) 16 Unit Boxes; (1) 12 Unit box, Per Postmaster | 1 | EACH | @ | $ 3,500.00 | $ 3,500.00 | 0.0% | 0.0% | $ - |
| 550 | Street Signs | 4 | EACH | @ | $ 1,500.00 | $ 6,000.00 | 0.0% | 0.0% | $ - |
| 560 | Street Lights | 3 | EACH | @ | $ 5,500.00 | $ 16,500.00 | 0.0% | 0.0% | $ - |
| CO-1 | 2' Over-Ex in P.U.E. | 1 | LS | @ | $ 83,296.50 | $ 83,296.50 | 25.0% | 25.0% | $ 20,824.13 |
| 600 | Engineering | 1 | LS | @ | $ 20,000.00 | $ 20,000.00 | 0.0% | 0.0% | $ - |
| 610 | Survey | 1 | LS | @ | $ 20,000.00 | $ 20,000.00 | 0.0% | 0.0% | $ - |
| 620 | Impact Fees | 29 | LOTS | @ | $ 4,671.32 | $ 135,468.28 | 0.0% | 0.0% | $ - |
| 630 | Inspection Fees | 29 | LOTS | @ | $ 418.00 | $ 12,122.00 | 0.0% | 0.0% | $ - |
| 640 | Dry Utility Design | 1 | LS | @ | $ 40,000.00 | $ 40,000.00 | 0.0% | 0.0% | $ - |

| | | | |
|---|---|---|---|
| *BASE BID TOTAL* | $ | 2,136,094.03 | Previously Released: $ - |
| *10% Warranty Amount* | $ | 213,609.40 | |
| *TOTAL BOND AMOUNT* | **$** | **2,349,703.43** | **This Release: $ 33,434.13** |
| *Total Released to Date* | **$** | **33,434.13** | |
| ***TOTAL BOND REMAINING*** | **$** | **2,316,269.31** | |

At the discrection of the city, up to 95% of the Base Bid Total may be released as partial payments and 100% of the Base Bid Total will be released at final inspection. The 10% Warranty Amount will be held for the one year warranty period.

Paul Kroff
Developer

Date

Troy Stout
Mayor

Date

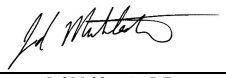

5/21/2021

Jed Muhlestein, P.E.
City Engineer

Date

City Council
(by Bonnie Cooper - City Recorder)

Date

ENERGY MANAGEMENT CORPORATION
Motors • Drives • Generators
Visit www.emcsolutions.com

Utah
Corporate Headquarters
501 W 700 S
Salt Lake City, UT 84101
801.366.4100
800.433.4548

Colorado
4905 B Ironton St
Denver, CO 80239
303.574.9448
800.511.7734

Idaho
7292 W Airway Ct
Boise, ID 83709
208.322.8100

California
EMEC dba:
GP Electric Motor
1020 Price Street
Pomona, CA 91767
909.865.2291

Wyoming
839 Elk Street,
Rock Springs, WY
82901
800.433.4548

Nevada
Las Vegas, NV
800.433.4548

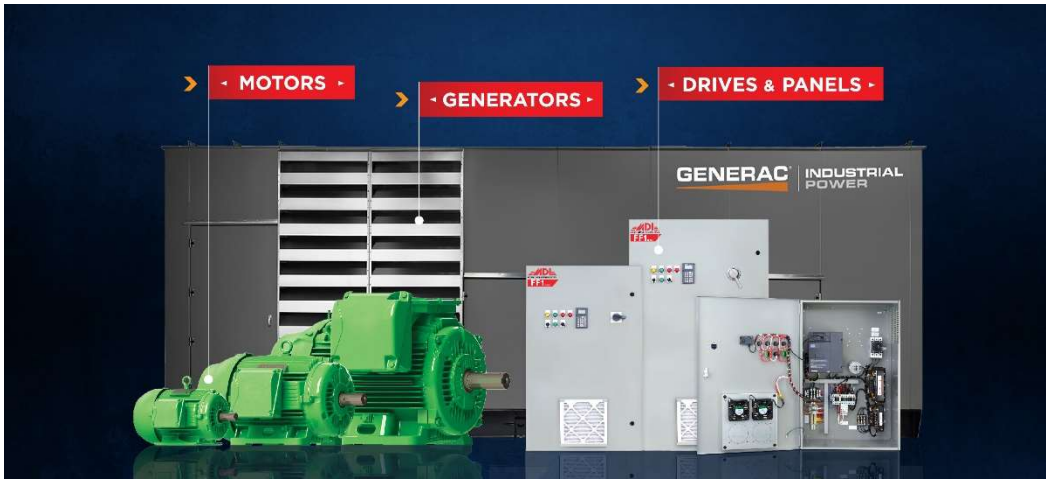


# Alpine City Pump House
## State Contract PD-3053

---

# Quotation # 138648

**March 11,2021**




GENERAC® | INDUSTRIAL POWER

**Energy Management Corporation is pleased to present the following quote for the emergency standby power generation system to meet your project needs. Cut sheets are available upon request.**

## SG70kW /100kW ALT

| Description |
|---|
| Quantity One- - Generac Industrial gaseous engine-driven generator, 4.5L in-line 4 cylinder engine, consisting of the following features and accessories:<br><br>• ***Stationary Emergency-Standby rated @ 105 Amps at 3,500 feet and will derate 2.1% for every 1,000 feet above 3,500 feet***<br>• ***70 kW rating, wired for 277/480 VAC three phase, 60 Hz @ 3,500 feet and will derate 2.1% for every 1,000 feet above 3,500 feet***<br>• ***With upsized 100kW alternator***<br>• ***Permanent Magnet Excitation***<br>• ***MLCB, 80% rated thermal-magnetic***<br>  ○ ***125 Amp***<br>• ***Natural Gas fuel system***<br>• ***Level 2 Acoustic Enclosure, Steel***<br>  ○ Industrial Grey Baked-On Powder Coat Finish<br>• EPA Certified<br>• cETLus<br>• Power Zone Pro Digital Control Panel for Single Generators<br>  ○ Meets NFPA 99 and 110 requirements<br>  ○ Temp Range -40 to 70 degrees C<br>  ○ Humidity 2 – 95% (Non Condensing)<br>  ○ UL6200<br>  ○ C-ETL-US<br>  ○ CE<br>  ○ FCC<br>  ○ IEC801 (Radiated Emissions, Susceptibility, and Surge Immunity)<br>  ○ 4.3” Resistive Color Touchscreen<br>  ▪ Built-in Wi-Fi, Bluetooth, and Webserver (via Power Zone Connectivity Server)<br>  ▪ IP65 (front)<br>  ▪ Auto/Manual/Off key switch, Alarm Indication, Not in Auto Indication, audible alarm, emergency stop switch<br>  ○ Dual Core Digital Microprocessor<br>  ▪ RS485, Ethernet and CANbus ports<br>  ○ All engine sensors are 4-20ma for minimal interference<br>  ▪ Sensors: Oil Pressure, optional Oil Temp, Coolant Temp and Level, Fuel Level/Pressure (where applicable), Engine Speed, DC Battery Voltage, Run-time Hours, Generator Voltages, Amps, Frequency, Power, Power Factor<br>  ▪ Alarm Status: Low or High AC Voltage, Low or High Battery Voltage, Low or High Frequency, Pre-low or Low Oil Pressure, Pre-high or High Oil Temp (optional), Low Water Level and Temp, Pre-high or High Engine Temp, High, Low, and Critical-low Fuel Level/Pressure (where applicable), Overcrank, Over and Under Speed, Unit Not in Automatic<br>  ▪ Programmable I/O |

        - Built-in PLC for special applications
    - Engine function monitoring and control:
        - Full range standby operation; programmable auto crank, Emergency Stop, Auto-Off-Manual switch
        - Isochronous Governor
            - 0.25% digital frequency regulation with: soft-start ramping - adjustable, gain - adjustable, overshoot limit - adjustable
        - 3 Phase RMS Voltage Sensing
            - +/-0.5% digital voltage regulation with: soft-start voltage ramping - adjustable, loss of sensing protection - adjustable, negative power limit - adjustable, Hi/Lo voltage limit - adjustable, V/F slope and gain - adjustable, fault protection
    - Service reminders, trending, fault history (alarm log)
    - I2T function for full generator protection
    - Selectable low-speed exercise
    - 2-wire start controls for any 2-wire transfer switch
- ***90 AH, 700 CCA Group 27F Battery, with rack, installed***
- ***Block Heater, 1500 watt***
- ***Std Heavy Duty Air Cleaner***
- ***8 Position Load Center***
- ***Critical Grade Silencer***
- ***Std set of 3 Manuals***
- ***2-Year Comprehensive Warranty***
- ***Battery Heating Pad***
- SG0070KG264.5S18TPLYA

Quantity One-- ***TRANSFER SWITCH - TX SERIES***

- ***200 Amp, 3 pole, 277/480 VAC three phase, 60 Hz, with 2-Wire Start Circuit***
    - ***Utility Voltage Sensing Controls:***
        - ***Adjustable Drop-out and Pick-up***
        - ***Adjustable Utility Interrupt Delay***
    - Adjustable Logic Controls:
        - Minimum Standby Voltage
        - Minimum Standby Frequency
        - Engine Warmup
        - Return to Utility
        - Engine Cooldown
        - Transfer on Exercise
- ***Enclosure Heater***
- ***Double Set of Form C Auxiliary Contacts***
- ***UL Listed 1008 by ETL***
- ***Controller Cover, Padlockable, Black***
- ***NEMA 3R Enclosure***
- ***3 Owner's Manuals***
- ***22KA Contactor Withstand and Closing Rating***
- ***In Phase Only Transfer***
- ***Two Year Extended Warranty***
  TX611NN0200K3CH

**Freight Allowed Job Site, FOB Factory**

| Factory Authorized Start Up | |
|---|---|
| 4 hour load bank at time of start-up | |
| Total (not including any applicable tax) | $27,238.00 |

## SD60kW

| Description |
|---|

Quantity One- - Generac Industrial diesel engine-driven generator set with turbocharged 4-cylinder 4.5L engine, consisting of the following features and accessories:

- ***Stationary Emergency-Standby rated@ 90Amps at 3,000 feet and will derate 3% for every 1,000 feet above 3,000 feet.***
- ***60 kW Rating, wired for 277/480 VAC three phase, 60 Hz @ will derate 3% for every 1,000 feet above 3,000 feet.***
- ***Permanent Magnet Excitation***
- ***Level 2 Acoustic Enclosure, Steel ( L 111.8" x 40.5" W x 93.6" H )***
  - ***Industrial Grey Baked-On Powder Coat Finish***
- UL2200
- EPA Certified
- H-100 Control Panel
  - Meets NFPA 99 and 110 requirements
  - Temp Range -40 to 70 degrees C
  - Digital Microprocessor:
    - Two 4-line x 20 displays, full system status
    - 3 Phase sensing, +/-0.25% digital voltage regulation
    - RS232, RS485 and Canbus remote ports
    - Waterproof connections
    - All engine sensors are 4-20ma for minimal interference
    - Programmable I/O
    - Built-in PLC for special applications
  - Engine function monitoring and control:
    - Full range standby operation; programmable auto crank, Emergency Stop, Auto-Off-Manual switch
    - Isochronous Governor, +/-0.25% frequency regulation
    - Full system status on all AC output and engine function parameters
    - Service reminders, trending, fault history (alarm log)
    - I2T function for full generator protection
    - Selectable low-speed exercise
  - HTS transfer switch function monitoring and control
  - 2-wire start controls for any 2-wire transfer switch
- ***110 AH, 925 CCA Group 31 Battery, with rack, installed***
- ***Standard MLCB, 80% rated thermal-magnetic***
  - ***100 Amp***
- ***Battery Heating Pad***
- ***Battery Charger, 10 Amp, NFPA 110 compliant, installed***
- ***Coolant Heater, 1500W, 120VAC***
- ***24" 189 Gallon Double-Wall UL142 Basetank full load run time 39 hours***
  - ***Mechanical fuel level indicator gauge***
  - ***Electronic fuel level sender***

- ***3 Owner's Manuals***
- ***8 Position Load Center***
- ***2-Year Comprehensive Warranty***
- SD0060KG174.5D18HPLY3

Quantity One-- ***TRANSFER SWITCH - TX SERIES***

- ***200 Amp, 3 pole, 277/480 VAC three phase, 60 Hz, with 2-Wire Start Circuit***
  - ***Utility Voltage Sensing Controls:***
    - ***Adjustable Drop-out and Pick-up***
    - ***Adjustable Utility Interrupt Delay***
  - Adjustable Logic Controls:
    - Minimum Standby Voltage
    - Minimum Standby Frequency
    - Engine Warmup
    - Return to Utility
    - Engine Cooldown
    - Transfer on Exercise
- ***Enclosure Heater***
- ***Double Set of Form C Auxiliary Contacts***
- ***UL Listed 1008 by ETL***
- ***Controller Cover, Padlockable, Black***
- ***NEMA 3R Enclosure***
- ***3 Owner's Manuals***
- ***22KA Contactor Withstand and Closing Rating***
- ***In Phase Only Transfer***
- ***Two Year Extended Warranty***

  TX611NN0200K3CH

**Freight Allowed Job Site, FOB Factory**

**Factory Authorized Start Up**

**4-hour load bank at time of start-up**

| **Total (not including any applicable tax)** | **$29,000.00** |
|---|---|

| **Description** |
|---|
| Quantity One- SSW06 RVSS units: SSW060023T2257ESZ **$637 each**; factory has some on order currently*** |
| Quantity One- SSW06 RVSS 20HP alternative due to 15hp stock: **$690**; currently available |
| Quantity One- SSW06 RVSS 20HP alternative due to 15hp stock: **$690**; currently available |

# Alpine City Installation

| Description |
| --- |
| **Diesel Generator and ATS** .<br>Labor and Material to install the generator and the ATS with concrete pad - Permits by others.<br>**(tax not included) $ 29,055.00**<br><br>**Natual Gas Generator and ATS**<br>Labor and Material to install the generator and the ATS and Gas pipping -permits by others.<br>**(tax not included) $ 31,125.00** |

**NOTES AND CLARIFICATIONS:**

1. **This quotation is our best interpretation of the project plans and specifications available to us at the time if bid. It is our intent to meet the project requirements, subject to approved submittals. This quotation is per the above bill of materials and not plan and specification. Quoted price does not include taxes, installation, mounting, wiring, off -loading, diesel fuel or other items not specifically designated or quoted herein.**
2. **Seismic anchor calculations with stamped calculations from a Licensed Structural Engineer provided by others.**
3. **Labeling and other project required designations not included.**
4. **This quotation is valid for 30 days.**
5. **Allow 2 weeks for submittals after order.**
6. **Order is subject to credit approval. Payment terms are net 30 days with approved Credit.**
7. **Current lead time is estimated at SG70kW 9 to 11 weeks or SD60kW 13-15 weeks after written receipt of release and approved submittals. Lead times are estimates only and are subject to change.**
8. **FOB-Point of Shipment, Freight is Prepaid. Shipping Method is Ground Motor Freight, Best Way.**
9. **Factory Authorized Start up services are required to validate Generac warranty.**

10. **Start-up is scheduled during standard business hours. Weekend and evening start-up hours will incur additional charges. Full warranty terms and conditions are available upon request.**

**PH: 801-366-4100 FX: 801-487-7437** **21988**

CONFIDENTIAL: The information contained in this email/quotation (including any attachments) is confidential, subject to copyright and for the use of the intended recipient only. If you are not the intended recipient, please delete this message after notifying the sender. Unauthorized retention, alteration, or distribution of this e-mail is forbidden and may be actionable. Attachments are opened at your own risk and you are advised to scan incoming email for viruses before opening any attached files. We give no guarantee that any communication is virus-free and accept no responsibility for virus contamination or other system loss or damage of any kind.

# SD060 | 4.5L | 60 kW

INDUSTRIAL DIESEL GENERATOR SET

EPA Certified Stationary Emergency

GENERAC | INDUSTRIAL POWER

**Standby Power Rating**
60 kW, 75 kVA, 60 Hz

**Prime Power Rating***
54 kW, 68 kVA, 60 Hz

ISO 9001:2008

USA ENGINEERED & BUILT*

*Assembled in the USA using domestic and foreign parts

*EPA Certified Prime ratings are not available in the US or its Territories

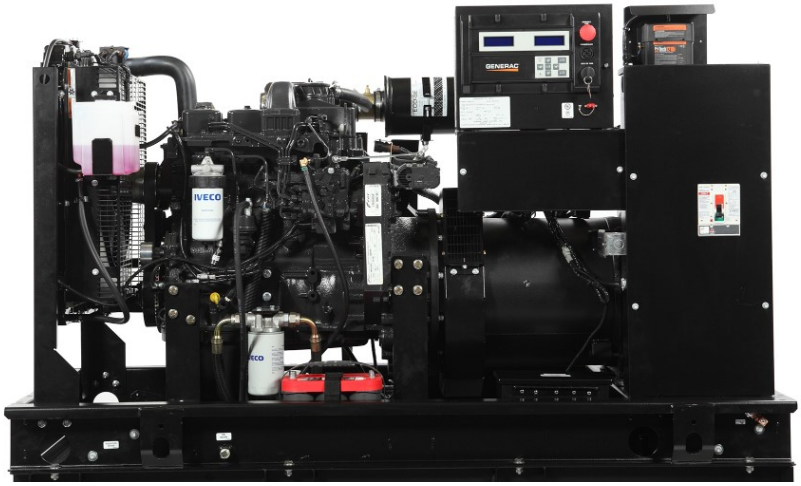

Image used for illustration purposes only

## Codes and Standards

**Not all codes and standards apply to all configurations. Contact factory for details.**

UL2200, UL6200, UL1236, UL489, UL142

CSA C22.2, ULC S601

BS5514 and DIN 6271

SAE J1349

NFPA 37, 70, 99, 110

NEC700, 701, 702, 708

ISO 3046, 7637, 8528, 9001

NEMA ICS10, MG1, 250, ICS6, AB1

ANSI C62.41

IBC 2009, CBC 2010, IBC 2012, ASCE 7-05, ASCE 7-10, ICC-ES AC-156 (2012)

## Powering Ahead

For over 60 years, Generac has provided innovative design and superior manufacturing.

Generac ensures superior quality by designing and manufacturing most of its generator components, including alternators, enclosures and base tanks, control systems and communications software.

Generac gensets utilize a wide variety of options, configurations and arrangements, allowing us to meet the standby power needs of practically every application.

Generac searched globally to ensure the most reliable engines power our generators. We choose only engines that have already been proven in heavy-duty industrial applications under adverse conditions.

Generac is committed to ensuring our customers' service support continues after their generator purchase.

# SD060 | 4.5L | 60 kW

INDUSTRIAL DIESEL GENERATOR SET

EPA Certified Stationary Emergency

GENERAC | INDUSTRIAL POWER

## STANDARD FEATURES

### ENGINE SYSTEM

- Engine Block Heater
- Oil Drain Extension
- Air Cleaner
- Level 1 Fan and Belt Guards (Open Set Only)
- Stainless Steel Flexible Exhaust Connection
- Factory Filled Oil and Coolant
- Radiator Duct Adapter (Open Set Only)

#### Fuel System

- Fuel Lockoff Solenoid
- Primary Fuel Filter

#### Cooling System

- Closed Coolant Recovery System
- UV/Ozone Resistant Hoses
- Factory-Installed Radiator
- Radiator Drain Extension

#### Electrical System

- Battery Charging Alternator
- Battery Cables
- Battery Tray
- Rubber-Booted Engine Electrical Connections
- Solenoid Activated Starter Motor

### ALTERNATOR SYSTEM

- UL2200 GENprotect™
- 12 Leads (3-Phase, Non 600V)
- Class H Insulation Material
- 2/3 Pitch
- Skewed Stator
- Auxiliary Voltage Regulator Power Winding
- Brushless Excitation
- Sealed Bearing
- Rotor Dynamically Spin Balanced
- Amortisseur Winding
- Full Load Capacity Alternator
- Protective Thermal Switch

### GENERATOR SET

- Internal Genset Vibration Isolation
- Separation of Circuits - High/Low Voltage
- Separation of Circuits - Multiple Breakers
- Wrapped Exhaust Piping
- Standard Factory Testing
- 2 Year Limited Warranty (Standby Rated Units)
- 1 Year Limited Warranty (Prime Rated Units)

### ENCLOSURE (If Selected)

- Rust-Proof Fasteners with Nylon Washers to Protect Finish
- High Performance Sound-Absorbing Material (Sound Attenuated Enclosures)
- Gasketed Doors
- Upward Facing Discharge Hoods (Radiator and Exhaust)
- Stainless Steel Lift Off Door Hinges
- Stainless Steel Lockable Handles
- RhinoCoat™ - Textured Polyester Powder Coat Paint

### FUEL TANKS (If Selected)

- UL 142/ULC S601
- Double Wall Construction
- Normal and Emergency Vents
- Sloped Top
- Sloped Bottom
- Factory Pressure Tested - 2 psi
- Rupture Basin Alarm
- Fuel Level
- Check Valve in Supply and Return Lines
- RhinoCoat™- Textured Polyester Powder Coat Paint
- Stainless Steel Hardware

### CONTROL SYSTEM




#### Digital H Control Panel- Dual 4x20 Display

#### Program Functions

- Programmable Crank Limiter
- 7-Day Programmable Exerciser
- Special Applications Programmable Logic Controller
- RS-232/485 Communications
- All Phase Sensing Digital Voltage Regulator
- 2-Wire Start Capability
- Date/Time Fault History (Event Log)
- Isochronous Governor Control
- Waterproof/Sealed Connectors
- Audible Alarms and Shutdowns
- Not in Auto (Flashing Light)
- Auto/Off/Manual Switch
- E-Stop (Red Mushroom-Type)
- NFPA 110 Level I and II (Programmable)
- Customizable Alarms, Warnings, and Events
- Modbus® Protocol
- Predictive Maintenance Algorithm
- Sealed Boards
- Password Parameter Adjustment Protection
- Single Point Ground
- 16 Channel Remote Trending
- 0.2 msec High Speed Remote Trending
- Alarm Information Automatically Annunciated on the Display

#### Full System Status Display

- Power Output (kW)
- Power Factor
- kW Hours, Total, and Last Run
- Real/Reactive/Apparent Power
- All Phase AC Voltage
- All Phase Currents
- Oil Pressure
- Coolant Temperature
- Coolant Level
- Engine Speed
- Battery Voltage
- Frequency

#### Alarms and Warnings

- Oil Pressure
- Coolant Temperature
- Coolant Level
- Engine Overspeed
- Battery Voltage
- Alarms and Warnings Time and Date Stamped
- Snap Shots of Key Operation Parameters During Alarms and Warnings
- Alarms and Warnings Spelled Out (No Alarm Codes)

# SD060 | 4.5L | 60 kW

INDUSTRIAL DIESEL GENERATOR SET

EPA Certified Stationary Emergency

GENERAC | INDUSTRIAL POWER

## CONFIGURABLE OPTIONS

### ENGINE SYSTEM

- ○ Oil Heater
- ○ Industrial Silencer
- ○ Level 1 Fan and Belt Guards (Enclosed Units Only)
- ○ Critical Grade Silencer (Open Set Only)
- ○ Air Filter Restriction Indication
- ○ Radiator Stone Guard (Open Set Only)

### FUEL SYSTEM

- ○ NPT Flexible Fuel Line

### ELECTRICAL SYSTEM

- ○ 10A UL Listed Battery Charger
- ○ Battery Warmer

### ALTERNATOR SYSTEM

- ○ Alternator Upsizing
- ○ Anti-Condensation Heater
- ○ Tropical Coating
- ○ Permanent Magnet Excitation

### GENERATOR SET

- ○ 8 Position Load Center
- ○ Extended Factory Testing (3-Phase Only)

### CIRCUIT BREAKER OPTIONS

- ○ Main Line Circuit Breaker
- ○ 2nd Main Line Circuit Breaker
- ○ Shunt Trip and Auxiliary Contact
- ○ Electronic Trip Breakers

### ENCLOSURE

- ○ Weather Protected Enclosure
- ○ Level 1 Sound Attenuated
- ○ Level 2 Sound Attenuated
- ○ Level 2 Sound Attenuated with Motorized Dampers
- ○ Steel Enclosure
- ○ Aluminum Enclosure
- ○ Up to 200 MPH Wind Load Rating (Contact Factory for Availability)
- ○ AC/DC Enclosure Lighting Kit
- ○ Door Open Alarm Switch
- ○ Pad Vibration Isolation
- ○ Enclosure Heater (with Motorized Dampers Only)
- ○ IBC Seismic Certification

### WARRANTY (Standby Gensets Only)

- ○ 2 Year Extended Limited Warranty
- ○ 5 Year Limited Warranty
- ○ 5 Year Extended Limited Warranty
- ○ 7 Year Extended Limited Warranty
- ○ 10 Year Extended Limited Warranty

### CONTROL SYSTEM

- ○ NFPA 110 Compliant 21-Light Remote Annunciator
- ○ Remote Relay Assembly (8 or 16)
- ○ Oil Temperature Indication and Alarm
- ○ Remote E-Stop (Break Glass-Type, Surface Mount)
- ○ Remote E-Stop (Red Mushroom-Type, Surface Mount)
- ○ Remote E-Stop (Red Mushroom-Type, Flush Mount)
- ○ E-Stop Terminal
- ○ Remote Communication - Modem
- ○ 10A Run Relay
- ○ Ground Fault Annunciator
- ○ Damper Alarm Contacts (with Motorized Dampers Only)
- ○ 120V GCFI and 240V Outlets
- ○ 100 dB Alarm Horn

### FUEL TANKS (Size On Last Page)

- ○ 8 in (203.2 mm) Fill Extension
- ○ 13 in (330.2 mm) Fill Extension
- ○ Emergency Vents
- ○ 12 ft Vent Extensions
- ○ Overfill Protection Valve
- ○ Fuel Drop Tube
- ○ 5 Gallon Spill Box
- ○ 5 Gallon Spill Box Return Hose
- ○ Tank Risers
- ○ Fire Rated Stainless Steel Fuel Hose
- ○ 90% High Fuel Alarm

## ENGINEERED OPTIONS

### ENGINE SYSTEM

- ○ Coolant Heater Ball Valves
- ○ Fluid Containment Pan

### CONTROL SYSTEM

- ○ Spare Inputs (x4) / Outputs (x4)
- ○ Battery Disconnect Switch

### ALTERNATOR SYSTEM

- ○ 3rd Breaker System

### TANKS

- ○ UL2085 Tank
- ○ Stainless Steel Tanks

# SD060 | 4.5L | 60 kW

INDUSTRIAL DIESEL GENERATOR SET

EPA Certified Stationary Emergency

GENERAC | INDUSTRIAL POWER

## APPLICATION AND ENGINEERING DATA

### ENGINE SPECIFICATIONS

#### General

| | |
|---|---|
| Make | Iveco/FPT |
| EPA Emissions Compliance | Stationary Emergency |
| EPA Emissions Reference | See Emission Data Sheet |
| Cylinder # | 4 |
| Type | In-Line |
| Displacement - $in^3$ (L) | 274.6 (4.5) |
| Bore - in (mm) | 4.1 (105) |
| Stroke - in (mm) | 5.2 (132) |
| Compression Ratio | 17.5:1 |
| Intake Air Method | Turbocharged |
| Cylinder Head | 2 Valve |
| Piston Type | Aluminum |
| Crankshaft Type | Forged Steel |

#### Engine Governing

| | |
|---|---|
| Governor | Electronic Isochronous |
| Frequency Regulation (Steady State) | ±0.25% |

#### Lubrication System

| | |
|---|---|
| Oil Pump Type | Gear Driven |
| Oil Filter Type | Full-Flow Cartridge |
| Crankcase Capacity - qt (L) | 14.4 (13.6) |

#### Cooling System

| | |
|---|---|
| Cooling System Type | Closed |
| Water Pump Type | Belt Driven Centrifugal |
| Fan Type | Pusher |
| Fan Speed - RPM | 2,538 |
| Fan Diameter - in (mm) | 26 (660) |

#### Fuel System

| | |
|---|---|
| Fuel Type | Ultra Low Sulfur Diesel Fuel #2 |
| Fuel Specifications | ASTM |
| Fuel Filtering (Microns) | 5 |
| Fuel Pump Type | Engine Driven Gear |
| Injector Type | Mechanical |
| Fuel Supply Line - in (mm) | 0.5 (12.7) NPT |
| Fuel Return Line - in (mm) | 0.5 (12.7) NPT |

#### Engine Electrical System

| | |
|---|---|
| System Voltage | 12 VDC |
| Battery Charger Alternator | Standard |
| Battery Size | See Battery Index 0161970SBY |
| Battery Voltage | 12 VDC |
| Ground Polarity | Negative |

### ALTERNATOR SPECIFICATIONS

| | |
|---|---|
| Standard Model | K0060124Y21 |
| Poles | 4 |
| Field Type | Revolving |
| Insulation Class - Rotor | H |
| Insulation Class - Stator | H |
| Total Harmonic Distortion | <5% (3-Phase Only) |
| Telephone Interference Factor (TIF) | < 50 |

| | |
|---|---|
| Standard Excitation | Brushless |
| Bearings | One Pre-Lubed and Sealed |
| Coupling | Direct via Flexible Disc |
| Prototype Short Circuit Test | Yes |
| Voltage Regulator Type | Digital |
| Number of Sensed Phases | All |
| Regulation Accuracy (Steady State) | ±0.25% |

# SD060 | 4.5L | 60 kW

INDUSTRIAL DIESEL GENERATOR SET

EPA Certified Stationary Emergency

## OPERATING DATA

### POWER RATINGS - DIESEL

| | | Standby |
|---|---|---|
| Single-Phase 120/240 VAC @1.0pf | 60 kW | Amps: 250 |
| Three-Phase 120/208 VAC @0.8pf | 60 kW | Amps: 208 |
| Three-Phase 120/240 VAC @0.8pf | 60 kW | Amps: 180 |
| Three-Phase 277/480 VAC @0.8pf | 60 kW | Amps: 90 |
| Three-Phase 346/600 VAC @0.8pf | 60 kW | Amps: 72 |

### MOTOR STARTING CAPABILITIES (skVA)

skVA vs. Voltage Dip

| 277/480 VAC | 30% | 208/240 VAC | 30% |
|---|---|---|---|
| K0060124Y2 | 124 | K0060124Y2 | 95 |
| K0080124Y21 | 172 | K0080124Y21 | 132 |
| K0100124Y21 | 227 | K0100124Y21 | 171 |

### FUEL CONSUMPTION RATES*

| Fuel Pump Lift - ft (m) |
|---|
| 3 (1) |

| Total Fuel Pump Flow (Combustion + Return) - gph (Lph) |
|---|
| 13.6 (51.5) |

Diesel - gph (Lph)

| Percent Load | Standby |
|---|---|
| 25% | 1.4 (5.3) |
| 50% | 2.7 (10.2) |
| 75% | 3.8 (14.4) |
| 100% | 4.8 (18.2) |

* Fuel supply installation must accommodate fuel consumption rates at 100% load.

### COOLING

| | | Standby |
|---|---|---|
| Coolant Flow | gpm (Lpm) | 32.7 (123.8) |
| Coolant System Capacity | gal (L) | 4.5 (17.4) |
| Heat Rejection to Coolant | BTU/hr (kW) | 123,000 (36.0) |
| Inlet Air | scfm ($m^3$/hr) | 6,360 (180) |
| Maximum Operating Ambient Temperature | °F (°C) | 122 (50) |
| Maximum Ambient Temperature (Before Derate) | See Bulletin No. 0199280SSD | |
| Maximum Additional Radiator Backpressure | in $H_2O$ (kPa) | 0.5 (0.12) |

### COMBUSTION AIR REQUIREMENTS

| | Standby |
|---|---|
| Flow at Rated Power - scfm ($m^3$/min) | 247 (7.0) |

### ENGINE

| | | Standby |
|---|---|---|
| Rated Engine Speed | RPM | 1,800 |
| Horsepower at Rated kW** | hp | 93 |
| Piston Speed | ft/min (m/min) | 1,559 (475) |
| BMEP | psi (kPa) | 154 (1,062) |

### EXHAUST

| | | Standby |
|---|---|---|
| Exhaust Flow (Rated Output) | scfm ($m^3$/min) | 534 (15.1) |
| Maximum Allowable Backpressure (Post Silencer) | inHg (kPa) | 1.5 (5.1) |
| Exhaust Temperature (Rated Output - Post Turbo) | °F (°C) | 930 (499) |

** Refer to "Emissions Data Sheet" for maximum bHP for EPA and SCAQMD permitting purposes.

Deration – Operational characteristics consider maximum ambient conditions. Derate factors may apply under atypical site conditions.
Please contact a Generac Power Systems Industrial Dealer for additional details. All performance ratings in accordance with ISO3046, BS5514, ISO8528, and DIN6271 standards.
Standby - See Bulletin 0187500SSB
Prime - See Bulletin 0187510SSB

# SD060 | 4.5L | 60 kW

INDUSTRIAL DIESEL GENERATOR SET

EPA Certified Stationary Emergency

## DIMENSIONS AND WEIGHTS*

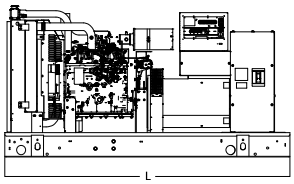


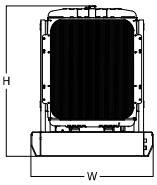


### OPEN SET

| Run Time - Hours | Usable Capacity - gal (L) | L x W x H - in (mm) | Weight - lbs (kg) |
|---|---|---|---|
| No Tank | - | 92.9 (2,360) x 40.0 (1,016) x 49.2 (1,250) | 2,488 (1,128) |
| 16 | 79 (299) | 92.9 (2,360) x 40.0 (1,016) x 62.2 (1,580) | 3,010 (1,365) |
| 39 | 189 (716) | 92.9 (2,360) x 40.0 (1,016) x 74.2 (1,885) | 3,246 (1,472) |
| 59 | 285 (1078) | 135.4 (3,438) x 40.0 (1,016) x 74.2 (1,885) | 3,963 (1,798) |
| 63 | 305 (1,134) | 92.9 (2,360) x 40.0 (1,016) x 86.2 (2,190) | 3,470 (1,573) |
| 72 | 350 (1,325) | 110.0 (2,794) x 40.0 (1,016) x 86.2 (2,190) | 3,872 (1,756) |
| 106 | 510 (1,930) | 116.5 (2,960) x 46.5 (1,180) x 91.8 (2,333) | 3,853 (1,749) |
| 122 | 589 (2,227) | 128.0 (3,250) x 46.8 (1,190) x 89.7 (2,279) | 4,332 (1,954) |

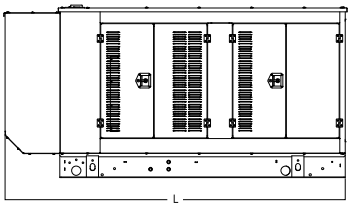


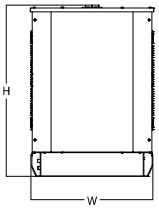


### WEATHER PROTECTED ENCLOSURE

| Run Time - Hours | Usable Capacity - gal (L) | L x W x H - in (mm) | Weight - lbs (kg) Enclosure Only | |
|---|---|---|---|---|
| | | | Steel | Aluminum |
| No Tank | - | 111.8 (2,840) x 40.5 (1,028) x 56.2 (1,427) | | |
| 16 | 79 (299) | 111.8 (2,840) x 40.5 (1,028) x 69.2 (1,757) | | |
| 39 | 189 (716) | 111.8 (2,840) x 40.5 (1,028) x 81.2 (2,062) | | |
| 59 | 285 (1,078) | 135.4 (3,438) x 40.5 (1,028) x 81.2 (2,062) | 529 (240) | 260 (118) |
| 63 | 305 (1,134) | 111.8 (2,840) x 40.5 (1,028) x 93.2 (2,367) | | |
| 72 | 350 (1,325) | 111.8 (2,840) x 40.5 (1,028) x 93.2 (2,367) | | |
| 106 | 510 (1,930) | 116.5 (2,960) x 46.5 (1,180) x 98.8 (2,510) | | |
| 122 | 589 (2,227) | 128.0 (3,250) x 46.8 (1,190) x 96.7 (2,456) | | |

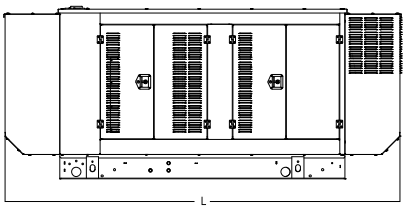


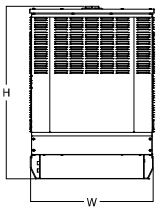


### LEVEL 1 SOUND ATTENUATED ENCLOSURE

| Run Time - Hours | Usable Capacity - gal (L) | L x W x H - in (mm) | Weight - lbs (kg) Enclosure Only | |
|---|---|---|---|---|
| | | | Steel | Aluminum |
| No Tank | - | 129.4 (3,287) x 40.5 (1,028) x 56.2 (1,427) | | |
| 16 | 79 (299) | 129.4 (3,287) x 40.5 (1,028) x 69.2 (1,757) | | |
| 39 | 189 (716) | 129.4 (3,287) x 40.5 (1,028) x 81.2 (2,062) | | |
| 59 | 285 (1,078) | 135.4 (3,438) x 40.5 (1,028) x 81.2 (2,062) | 690 (313) | 329 (150) |
| 63 | 305 (1,134) | 129.4 (3,287) x 40.5 (1,028) x 93.2 (2,367) | | |
| 72 | 350 (1,325) | 129.4 (3,287) x 40.5 (1,028) x 93.2 (2,367) | | |
| 106 | 510 (1,930) | 129.4 (3,287) x 46.5 (1,180) x 98.8 (2,510) | | |
| 122 | 589 (2,227) | 129.4 (3,287) x 46.8 (1,190) x 96.7 (2,456) | | |

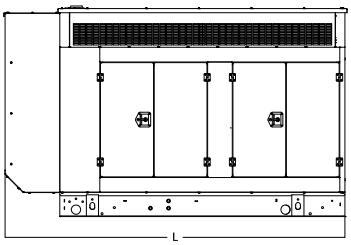


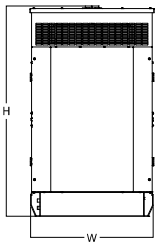


### LEVEL 2 SOUND ATTENUATED ENCLOSURE

| Run Time - Hours | Usable Capacity - gal (L) | L x W x H - in (mm) | Weight - lbs (kg) Enclosure Only | |
|---|---|---|---|---|
| | | | Steel | Aluminum |
| No Tank | - | 111.8 (2,840) x 40.5 (1,028) x 68.6 (1,743) | | |
| 16 | 79 (299) | 111.8 (2,840) x 40.5 (1,028) x 81.6 (2,073) | | |
| 39 | 189 (716) | 111.8 (2,840) x 40.5 (1,028) x 93.6 (2,378) | | |
| 59 | 285 (1,078) | 135.4 (3,438) x 40.5 (1,028) x 93.6 (2,378) | 818 (371) | 384 (175) |
| 63 | 305 (1,134) | 111.8 (2,840) x 40.5 (1,028) x 105.6 (2,683) | | |
| 72 | 350 (1,325) | 111.8 (2,840) x 40.5 (1,028) x 105.6 (2,683) | | |
| 106 | 510 (1,930) | 116.5 (2,960) x 46.5 (1,180) x 111.2 (2,826) | | |
| 122 | 589 (2,227) | 128.0 (3,250) x 46.8 (1,190) x 109.1 (2,772) | | |

* All measurements are approximate and specification characteristics may change without notice. Dimensions and weights are for preliminary purposes only. Please contact a Generac Power Systems Industrial Dealer for detailed installation drawings.



 ©2020 Generac Power Systems, Inc. All rights reserved. All specifications are subject to change without notice.

Part No 0K5091
Rev. C 05/14/2020

# SG070 | 4.5L | 70 kW

INDUSTRIAL SPARK-IGNITED GENERATOR SET

EPA Certified Stationary

GENERAC | INDUSTRIAL POWER

**DEMAND RESPONSE READY**

**Standby Power Rating**
70 kW, 88 kVA, 60 Hz

**Demand Response Rating**
70 kW, 88 kVA, 60 Hz

**Prime Power Rating**
63 kW, 79 kVA, 60 Hz

ISO 9001:2008

USA ENGINEERED & BUILT*
*Assembled in the USA using domestic and foreign parts

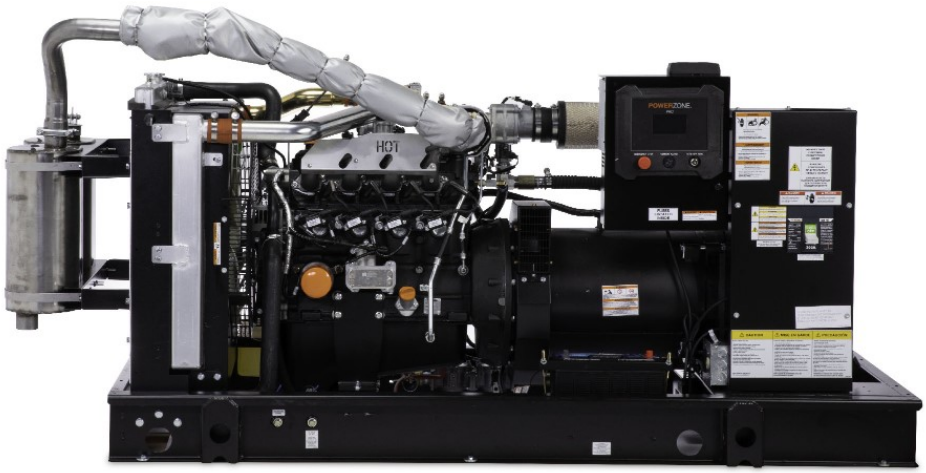

Image used for illustration purposes only

## Codes and Standards

**Not all codes and standards apply to all configurations. Contact factory for details.**

- UL2200, UL6200, UL1236, UL489
- CSA C22.2
- BS5514 and DIN 6271
- SAE J1349
- NFPA 37, 70, 99, 110
- NEC700, 701, 702, 708
- ISO 3046, 7637, 8528, 9001
- NEMA ICS10, MG1, 250, ICS6, AB1
- ANSI C62.41
- IBC 2009, CBC 2010, IBC 2012, ASCE 7-05, ASCE 7-10, ICC-ES AC-156 (2012)

## Powering Ahead

Generac ensures superior quality by designing and manufacturing most of its generator components, such as alternators, enclosures, control systems and communications software. Generac also makes its own spark-ignited engines, and you'll find them on every Generac gaseous-fueled generator. We engineer and manufacture them from the block up — all at our facilities throughout Wisconsin. Applying natural gas and LP-fueled engines to generators requires advanced engineering expertise to ensure reliability, durability and necessary performance. By designing specifically for these dry, hotter-burning fuels, the engines last longer and require less maintenance. Building our own engines also means we control every step of the supply chain and delivery process, so you benefit from single-source responsibility.

Plus, Generac Industrial Power's distribution network provides all parts and service so you don't have to deal with third-party suppliers. It all leads to a positive owner experience and higher confidence level. Generac spark-ignited engines give you more options in commercial and industrial generator applications as well as extended run time from utility-supplied natural gas.

# SG070 | 4.5L | 70 kW

INDUSTRIAL SPARK-IGNITED GENERATOR SET

EPA Certified Stationary

GENERAC | INDUSTRIAL POWER

## STANDARD FEATURES

**DEMAND RESPONSE READY**

### ENGINE SYSTEM

- Oil Drain Extension
- Air Cleaner
- Level 1 Fan and Belt Guards (Open Set Only)
- Stainless Steel Flexible Exhaust Connection
- Factory Filled Oil and Coolant
- Critical Silencer
- Oil Temperature Sender with Alarm
- Air Filter Restriction Indicator

### Fuel System

- NPT Fuel Connection on Frame
- Primary and Secondary Fuel Shutoff

### Cooling System

- Closed Coolant Recovery System
- UV/Ozone Resistant Hoses
- Factory-Installed Radiator
- 50/50 Ethylene Glycol Antifreeze
- Radiator Drain Extension

### Electrical System

- Battery Charging Alternator
- Battery Cables
- Battery Tray
- Rubber-Booted Engine Electrical Connections
- Solenoid Activated Starter Motor

### ALTERNATOR SYSTEM

- UL2200 GENprotect™
- Class H Insulation Material
- 2/3 Pitch
- Skewed Stator
- Brushless Excitation
- Sealed Bearing
- Full Load Capacity Alternator

### GENERATOR SET

- Internal Genset Vibration Isolation
- Separation of Circuits - High/Low Voltage
- Separation of Circuits - Multiple Breakers
- Wrapped Exhaust Piping
- Standard Factory Testing
- 2 Year Limited Warranty (Standby and Demand Response Rated Units)
- 1 Year Limited Warranty (Prime Rated Units)

### ENCLOSURE (If Selected)

- Rust-Proof Fasteners with Nylon Washers to Protect Finish
- High Performance Sound-Absorbing Material (Sound Attenuated Enclosures)
- Gasketed Doors
- Upward Facing Discharge Hoods (Radiator and Exhaust)
- Stainless Steel Lift Off Door Hinges
- Stainless Steel Lockable Handles
- RhinoCoat™ - Textured Polyester Powder Coat Paint

### CONTROL SYSTEM




### Power Zone® Pro Controller

- NFPA 110 Level 1 Compliant
- Engine Protective Functions
- Alternator Protective Functions
- Digital Engine Governor Control
- Digital Voltage Regulator
- Multiple Programmable Inputs and Outputs
- Remote Display Capability
- Remote Communication via Modbus® RTU, Modbus TCP/IP, and Ethernet 10/100
- Alarm and Event Logging with Real Time Stamping
- Expandable Analog and Digital Inputs and Outputs
- Remote Wireless Software Update Capable
- Wi-Fi®, Bluetooth®, BMS, and Remote Telemetry
- Built-In Programmable Logic Eliminates the Need for External Controllers Under Most Conditions
- Programmable I/O Channel Properties
- Built-In Diagnostics

### Alarms and Warnings

- High/Low Oil Pressure
- High/Low Coolant Level
- High/Low Coolant Temperature
- Sender/Sensor Failure
- High/Low Oil Temperature
- Over Total kW
- Over/Under Speed
- Over/Under Voltage
- Over/Under Frequency
- Over Current
- High/Low Battery Voltage
- Battery Charger Current
- Phase to Phase and Phase to Neutral Short Circuits ($I^2T$ Algorithm)

### 4.3 Inch Color Touch Screen Display

- Resistive Color Touch Screen
- Easily Identifiable Icons
- Multi-Lingual
- On Screen Editable Parameters
- Key Function Monitoring
- Three Phase Voltage, Amperage, kW, kVA, and kVAr
- Selectable Line to Line or Line to Neutral Measurements
- Frequency
- Engine Speed
- Engine Coolant Temperature
- Engine Oil Pressure
- Engine Oil Temperature
- Battery Voltage
- Hourmeter
- Warning and Alarm Indication
- Diagnostics
- Maintenance Events/Information

# SG070 | 4.5L | 70 kW

INDUSTRIAL SPARK-IGNITED GENERATOR SET

EPA Certified Stationary

GENERAC | INDUSTRIAL POWER

## CONFIGURABLE OPTIONS

**DEMAND RESPONSE READY**

### ENGINE SYSTEM

- ○ Heater with Shutoff Valves
- ○ Engine Coolant Heater
- ○ Oil Heater
- ○ Level 1 Fan and Belt Guards (Enclosed Units Only)
- ○ Radiator Duct Adapter (Open Set Only)

### ELECTRICAL SYSTEM

- ○ 10A UL Listed Battery Charger
- ○ Battery Warmer

### ALTERNATOR SYSTEM

- ○ Alternator Upsizing
- ○ Anti-Condensation Heater
- ○ Tropical Coating

### CIRCUIT BREAKER OPTIONS

- ○ Main Line Circuit Breaker
- ○ 2nd Main Line Circuit Breaker
- ○ 3rd Main Line Circuit Breaker
- ○ Shunt Trip and Auxiliary Contact
- ○ Electronic Trip Breakers

### GENERATOR SET

- ○ Extended Factory Testing (3-Phase Only)
- ○ 8 Position Load Center

### ENCLOSURE

- ○ Weather Protected Enclosure
- ○ Level 1 Sound Attenuated
- ○ Level 2 Sound Attenuated
- ○ Level 2 Sound Attenuated with Motorized Dampers
- ○ Steel Enclosure
- ○ Aluminum Enclosure
- ○ Up to 200 MPH Wind Load Rating (Contact Factory for Availability)
- ○ AC/DC Enclosure Lighting Kit
- ○ Enclosure Heaters (with Motorized Dampers Only)
- ○ Door Open Alarm Horn

### CONTROL SYSTEM

- ○ NFPA 110 Compliant 21-Light Remote Annunciator
- ○ Remote Relay Assembly (8 or 16)
- ○ Remote E-Stop (Break Glass-Type, Surface Mount)
- ○ Remote E-Stop (Red Mushroom-Type, Surface Mount)
- ○ Remote E-Stop (Red Mushroom-Type, Flush Mount)
- ○ 10A Engine Run Relay
- ○ Ground Fault Annunciator
- ○ 120V GFCI and 240V Outlets
- ○ 100 dB Alarm Horn
- ○ Damper Alarm Contacts (with Motorized Dampers Only)
- ○ Wi-Fi Extension Kit

### WARRANTY (Standby Gensets Only)

- ○ 2 Year Extended Limited Warranty
- ○ 5 Year Limited Warranty
- ○ 5 Year Extended Limited Warranty
- ○ 7 Year Extended Limited Warranty
- ○ 10 Year Extended Limited Warranty

## ENGINEERED OPTIONS

### CONTROL SYSTEM

- ○ Spare Inputs (x4) / Outputs (x4)
- ○ Battery Disconnect Switch

### GENERATOR SET

- ○ Special Testing
- ○ Battery Box

# SG070 | 4.5L | 70 kW

INDUSTRIAL SPARK-IGNITED GENERATOR SET

EPA Certified Stationary

GENERAC | INDUSTRIAL POWER

## APPLICATION AND ENGINEERING DATA

**DEMAND RESPONSE READY**

### ENGINE SPECIFICATIONS

#### General

| | |
|---|---|
| Make | Generac |
| Cylinder # | 4 |
| Type | In-Line |
| Displacement - $in^3$ (L) | 275.0 (4.5) |
| Bore - in (mm) | 4.5 (114.3) |
| Stroke - in (mm) | 4.25 (107.95) |
| Compression Ratio | 9.1:1 |
| Intake Air Method | Turbocharged |
| Number of Main Bearings | 5 |
| Connecting Rods | Forged Steel, Fractured Split, Bushingless |
| Cylinder Head | Cast Iron |
| Cylinder Liners | Cast Iron |
| Ignition | Coil Near Plug Solid State Inductive |
| Piston Type | Cast Aluminum Flat Top |
| Crankshaft Type | Forged Steel |
| Lifter Type | Hydraulic |
| Intake Valve Material | Stainless Steel |
| Exhaust Valve Material | Stainless Steel |
| Hardened Valve Seats | High Steel Iron Alloy |

#### Engine Governing

| | |
|---|---|
| Governor | Electronic |
| Frequency Regulation (Steady State) | ±0.25% |

#### Lubrication System

| | |
|---|---|
| Oil Pump Type | Gear Driven |
| Oil Filter Type | Full-Flow Spin-On Cartridge |
| Crankcase Capacity - qt (L) | 21 (20) |

#### Cooling System

| | |
|---|---|
| Cooling System Type | Pressurized Closed |
| Fan Type | Pusher |
| Fan Speed - RPM | 2,100 |
| Fan Diameter - in (mm) | 22 (533) |

#### Fuel System

| | |
|---|---|
| Fuel Type | Natural Gas, Propane |
| Fuel Injection | Electronic |
| Fuel Shut Off | Generac |
| Operating Fuel Pressure (Standard) - in $H_2O$ (kPa) | 5 - 14 (1.2 - 3.5) |

#### Engine Electrical System

| | |
|---|---|
| System Voltage | 12 VDC |
| Battery Charger Alternator | Standard |
| Battery Size | See Battery Index 0161970SBY |
| Battery Voltage | 12 VDC |
| Ground Polarity | Negative |

### ALTERNATOR SPECIFICATIONS

| | |
|---|---|
| Standard Model | K0080124Y21 |
| Poles | 4 |
| Field Type | Revolving |
| Insulation Class - Rotor | H |
| Insulation Class - Stator | H |
| Total Harmonic Distortion | <5% (3-Phase Only) |
| Telephone Interference Factor (TIF) | <50 |

| | |
|---|---|
| Standard Excitation | Brushless Synchronous |
| Bearings | Sealed Ball |
| Coupling | Direct via Flexible Disc |
| Prototype Short Circuit Test | Yes |
| Voltage Regulator Type | Full Digital |
| Number of Sensed Phases | All |
| Regulation Accuracy (Steady State) | ±0.25% |

# SG070 | 4.5L | 70 kW

INDUSTRIAL SPARK-IGNITED GENERATOR SET

EPA Certified Stationary

GENERAC | INDUSTRIAL POWER

## OPERATING DATA

**DEMAND RESPONSE READY**

### POWER RATINGS

| | Standby | | Prime | |
|---|---|---|---|---|
| Single-Phase 120/240 VAC @1.0pf | 70 kW/70 kVA | Amps: 292 | 63 kW/63 kVA | Amps: 263 |
| Three-Phase 120/208 VAC @0.8pf | 70 kW/88 kVA | Amps: 243 | 63 kW/79 kVA | Amps: 219 |
| Three-Phase 120/240 VAC @0.8pf | 70 kW/88 kVA | Amps: 211 | 63 kW/79 kVA | Amps: 190 |
| Three-Phase 277/480 VAC @0.8pf | 70 kW/88 kVA | Amps: 105 | 63 kW/79 kVA | Amps: 95 |
| Three-Phase 346/600 VAC @0.8pf | 70 kW/88 kVA | Amps: 84 | 63 kW/79 kVA | Amps: 76 |

### MOTOR STARTING CAPABILITIES (skVA)

skVA vs. Voltage Dip

| 1Ø 120/240 VAC | 30% | 3Ø 277/480 VAC | 30% | 3Ø 208/240 VAC | 30% |
|---|---|---|---|---|---|
| A0070044N21 | 58 | K0080124Y21 | 172 | K0080124Y21 | 132 |
| A0100044N21 | 67 | K0100124Y21 | 227 | K0100124Y21 | 171 |

### FUEL CONSUMPTION RATES*

Natural Gas – scfh ($m^3$/hr)

| Percent Load | Standby | Prime |
|---|---|---|
| 25% | 261 (7.4) | 240 (6.8) |
| 50% | 475 (13.5) | 431 (12.2) |
| 75% | 697 (19.7) | 630 (17.8) |
| 100% | 928 (26.3) | 835 (23.6) |

Propane – scfh ($m^3$/hr)

| Percent Load | Standby | Prime |
|---|---|---|
| 25% | 80 (2.3) | 69 (2.0) |
| 50% | 180 (5.1) | 160 (4.5) |
| 75% | 270 (7.6) | 245 (6.9) |
| 100% | 350 (9.9) | 320 (9.1) |

* Fuel supply installation must accommodate fuel consumption rates at 100% load.

### COOLING

| | | Standby | Prime |
|---|---|---|---|
| Air Flow (Fan Air Flow Across Radiator) - Open Set | cfm ($m^3$/min) | 4,343 (123) | 4,343 (123) |
| Coolant Flow | gpm (Lpm) | 24 (90) | 24 (90) |
| Coolant System Capacity | gal (L) | 8.9 (33.7) | 8.9 (33.7) |
| Maximum Operating Ambient Temperature | °F (°C) | 122 (50) | 122 (50) |
| Maximum Operating Ambient Temperature (Before Derate) | | See Bulletin No. 0199270SSD | |
| Maximum Additional Radiator Backpressure | in $H_2O$ (kPa) | 0.5 (0.12) | 0.5 (0.12) |

### COMBUSTION AIR REQUIREMENTS

| | Standby | Prime |
|---|---|---|
| Flow at Rated Power - cfm ($m^3$/min) | 157 (4.4) | 142 (4.0) |

### ENGINE

| | | Standby | Prime |
|---|---|---|---|
| Rated Engine Speed | RPM | 1,800 | 1,800 |
| Horsepower at Rated kW** | hp | 113 | 102 |
| Piston Speed | ft/min (m/min) | 1,275 (389) | 1,275 (389) |
| BMEP | psi (kPa) | 188 (1,296) | 170 (1,172) |

### EXHAUST

| | | Standby | Prime |
|---|---|---|---|
| Exhaust Flow (Rated Output) | cfm ($m^3$/min) | 390 (11.0) | 350 (10.0) |
| Maximum Allowable Exhaust Backpressure (Post Silencer) | inHg (kPa) | 0.75 (2.54) | 0.75 (2.54) |
| Exhaust Temperature (Rated Output) | °F (°C) | 1,362 (739) | 1,340 (727) |

** Refer to "Emissions Data Sheet" for maximum bHP for EPA and SCAQMD permitting purposes.

Deration – Operational characteristics consider maximum ambient conditions. Derate factors may apply under atypical site conditions.
Please contact a Generac Power Systems Industrial Dealer for additional details. All performance ratings in accordance with ISO3046, BS5514, ISO8528, and DIN6271 standards.
Standby - See Bulletin 0187500SSB
Prime - See Bulletin 0187510SSB

# SG070 | 4.5L | 70 kW

INDUSTRIAL SPARK-IGNITED GENERATOR SET

EPA Certified Stationary

GENERAC | INDUSTRIAL POWER

## DIMENSIONS AND WEIGHTS*

**DEMAND RESPONSE READY**

### OPEN SET

| | |
|---|---|
| L x W x H - in (mm) | 92.9 (2,360) x 40.0 (1,016) x 75.4 (1,915) |
| Weight - lbs (kg) | Contact Factory |

### WEATHER PROTECTED ENCLOSURE

| | |
|---|---|
| L x W x H - in (mm) | 120.3 (3,060) x 40.0 (1,016) x 69.1 (1,756) |
| Weight - lbs (kg) | Steel: Contact Factory<br>Aluminum: Contact Factory |

### LEVEL 1 SOUND ATTENUATED ENCLOSURE

| | |
|---|---|
| L x W x H - in (mm) | 120.3 (3,060) x 40.0 (1,016) x 69.1 (1,756) |
| Weight - lbs (kg) | Steel: Contact Factory<br>Aluminum: Contact Factory |

### LEVEL 2 SOUND ATTENUATED ENCLOSURE

| | |
|---|---|
| L x W x H - in (mm) | 120.3 (3,060) x 40.0 (1,016) x 69.1 (1,756) |
| Weight - lbs (kg) | Steel: Contact Factory<br>Aluminum: Contact Factory |

* All measurements are approximate and for estimation purposes only.

| YOUR FACTORY RECOGNIZED GENERAC INDUSTRIAL DEALER |
|---|
| |

Specification characteristics may change without notice. Please contact a Generac Power Systems Industrial Dealer for detailed installation drawings.

SPEC SHEET



Generac Power Systems, Inc. | P.O. Box 8 | Waukesha, WI 53189
P: (262) 544-4811 ©2020 Generac Power Systems, Inc. All rights reserved. All specifications are subject to change without notice.

Part No. A0000317024
Rev. 1 08/20/2020

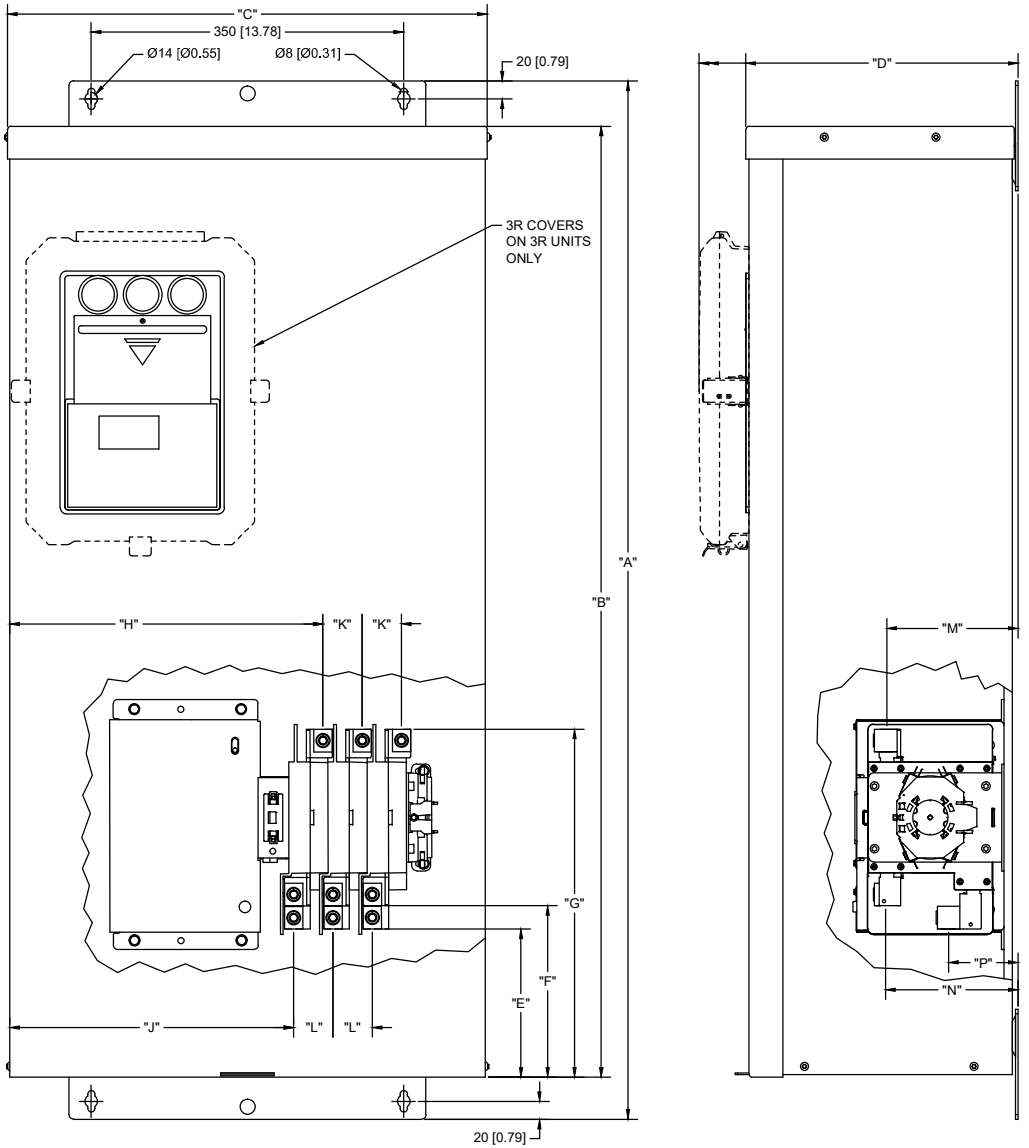


ALL DIMENSION ARE: mm [inches]

| DESCRIPTION | HEIGHT "A" | HEIGHT "B" | WIDTH "C" | DEPTH "D" | DIM "E" | DIM "F" | DIM "G" | DIM "H" | DIM "J" | DIM "K" | DIM "L" | DIM "M" | DIM "N" | DIM "P" | WEIGHT |
|---|---|---|---|---|---|---|---|---|---|---|---|---|---|---|---|
| 100A NON SER NEMA 1 | 903 | 806 | 538 | 305 | 226 | 252 | 471 | 348 | 315 | 44 | 44 | 149 | 149 | 79 | 48kg |
| | [35.55] | [31.71] | [21.16] | [12.00] | [8.89] | [9.91] | [18.54] | [13.70] | [12.40] | [1.73] | [1.73] | [5.88] | [5.88] | [3.11] | 105.6lbs |
| 100A NON SER NEMA 3R | 903 | 806 | 538 | 355 | 226 | 252 | 471 | 348 | 315 | 44 | 44 | 149 | 149 | 79 | 50kg |
| | [35.55] | [31.71] | [21.16] | [13.99] | [8.89] | [9.91] | [18.54] | [13.70] | [12.40] | [1.73] | [1.73] | [5.88] | [5.88] | [3.11] | 110.0lbs |
| 150A NON SER NEMA 1 | 903 | 806 | 538 | 305 | 237 | 263 | 460 | 348 | 315 | 44 | 44 | 153 | 153 | 83 | 53kg |
| | [35.55] | [31.71] | [21.16] | [12.00] | [9.31] | [10.34] | [18.12] | [13.70] | [12.40] | [1.73] | [1.73] | [6.04] | [6.04] | [3.26] | 116.6lbs |
| 150A NON SER NEMA 3R | 903 | 806 | 538 | 355 | 237 | 263 | 460 | 348 | 315 | 44 | 44 | 153 | 153 | 83 | 55kg |
| | [35.55] | [31.71] | [21.16] | [13.99] | [9.31] | [10.34] | [18.12] | [13.70] | [12.40] | [1.73] | [1.73] | [6.04] | [6.04] | [3.26] | 121.0lbs |
| 200A NON SER NEMA 1 | 903 | 806 | 538 | 305 | 237 | 263 | 460 | 348 | 315 | 44 | 44 | 153 | 153 | 83 | 53kg |
| | [35.55] | [31.71] | [21.16] | [12.00] | [9.31] | [10.34] | [18.12] | [13.70] | [12.40] | [1.73] | [1.73] | [6.04] | [6.04] | [3.26] | 116.6lbs |
| 200A NON SER NEMA 3R | 903 | 806 | 538 | 355 | 237 | 263 | 460 | 348 | 315 | 44 | 44 | 153 | 153 | 83 | 55kg |
| | [35.55] | [31.71] | [21.16] | [13.99] | [9.31] | [10.34] | [18.12] | [13.70] | [12.40] | [1.73] | [1.73] | [6.04] | [6.04] | [3.26] | 121.0lbs |

REVISION: D
REVISION DATE: 10/06/2020

ID TX SWITCH NON SERVICE ENTRANCE 3-POLE 100A-200A
A0000430682 (DRAWING: A0000561085)
NOT TO SCALE

# RESOLUTION NO. R2021-11

## A RESOLUTION OF THE GOVERNING BODY OF ALPINE CITY ESTABLISHING A CONSOLIDATED FEE SCHEDULE

WHEREAS, the governing body of Alpine City pursuant to Utah Code Annotated, Section 10-3-717 is empowered by resolution to set fees; and

WHEREAS, the governing body of Alpine City wishes to establish an equitable system of fees to cover the cost of providing municipal services;

NOW, THEREFORE, BE IT RESOLVED by the governing body of Alpine City that:

I. The following fees are hereby imposed as set forth herein:

**A. CITY RECORDER:**

| | | |
|---|---|---|
| 1. | Compiling records in a form other than that maintained by the City. | Actual cost and expense for employee time or time of any other person hired and supplies and equipment. Minimum charge of $10 per request. |
| 2. | Copy of record | $0.50/printed page |
| 3. | Certification of record | $1.00/certification |
| 4. | Postage | Actual cost to City |
| 5. | Other costs allowed by law | Actual cost to City |

6. Miscellaneous copying (per printed page):

| | B/W | Color |
|---|---|---|
| 8 ½ x 11 | $0.10 | $0.50 |
| 8 ½ x 14 | $0.15 | $0.70 |
| 11 x 17 | $0.20 | $0.90 |

| | | | |
|---|---|---|---|
| 7. | Electronic copies of minutes of meetings | Actual cost | |
| 8. | Maps (color copies) | 8 ½ x 11 | $2.50 |
| | | 11 x 17 | $5.00 |
| | | 24 x 36 | $18.00 |
| | | 34 x 44 | $30.00 |
| 9. | Maps with aerial photos | 8 ½ x 11 | $5.00 |
| | | 11 x 17 | $10.00 |
| | | 24 x 36 | $32.00 |

## B. BUILDING PERMITS AND INSPECTIONS:

1. Applications:

| | |
|---|---|
| New Homes/Commercial Buildings | $1,000.00 |
| Construction jobs exceeding a value of $50,000 | $250.00 |
| Fee for all other Building Permit Applications | $25.00 |
| Retaining Walls | $300.00 |

2. Building Permit Fees will be based on the construction values in Exhibit A and in accordance with the Building Code formula in Exhibit B. Finished basements and decks shall fall under (U) Utility, miscellaneous in Exhibit A.

   Refunds for permits issued will be limited to 80 percent of the permit costs, not later than 180 days after the date of fee payment. No refunds for plan review costs will be given if the plan review has been conducted.

   A building permit extension fee shall be assessed when building permits for new homes have become null and void. A permit becomes null and void if work or construction is not commenced within 180 days or if construction or work is suspended or abandoned for a period of 180 days at any time after work is commenced. The cost of extending a permit after it has become null and void will be one-half the original building permit fee which consists of the construction fee, electrical fee, plumbing fee and heating fee. A current infrastructure protection bond will also be posted by the new owner/applicant. The original infrastructure bond will be applied to any damage that occurred after the original permit was issued.

3. Minimum fees for issuance of individual permits including, but not limited to, meter upgrades, A/C, furnace, water heaters, etc. — Actual cost of inspection

4. One percent surcharge per building permit (Utah Code):
   a. 80 percent submitted to Utah State Government,
   b. 20 percent retained by City for administration of State collection.

5. Buildings of unusual design, excessive magnitude, or potentially hazardous exposures may, when deemed necessary by the Building Official, warrant an independent review by a design professional chosen by the Chief Building Official. The cost of this review may be assessed in addition to the building permit fee set forth in item #1 above.

6. Special Inspections — Actual cost to City

7. Re-inspection Fee — Actual cost to City

8. Retaining Wall Design Review Fee — $135/hr plus mileage at current IRS rate

9. Credit Card payments will only be accepted for total payments not exceeding $1000.00

## C. BUSINESS LICENSES:

| | | |
|---|---|---|
| 1. | Home Occupations | $50 + $25.00 for one non-family employee |
| 2. | Home Occupations (no impact) | No fee |
| 3. | Commercial | $50.00 + $25.00 for each employee (Maximum - $400.00) |
| 4. | Late Charge after 3/01 of each year | Double the base fee |
| 5. | Canvasser, Solicitors, and Other | $25.00 |

| | | |
|---|---|---|
| | Itinerant Merchants Application Fee | |
| 6. | Accessory Apartment Permit | $50.00 registration and annual fee |

**D. ORDINANCE ENFORCEMENT:**

| | | |
|---|---|---|
| 1. | Abatement of injurious and noxious real property and unsightly or deleterious objects or structures. | Actual cost of abatement plus 20% of actual cost |
| 2. | Nuisance Citation | $50 per violation/per day |

**E. PLANNING AND ZONING:**

| | | |
|---|---|---|
| 1. | General Plan amendment | $350.00 |
| 2. | Zone change | $350.00 |
| 3. | Appeal Authority | Actual Cost of Service |
| 4. | Conditional Use | $250.00 |
| 5. | Subdivisions | |
| | a. Plat Amendment Fee | $250.00 |
| | b. Concept Plan Review Fee | $100.00 + $20.00 per lot + actual cost of City Engineer's review |
| | c. Preliminary Plan Fee | $100.00 + $90.00 per lot + actual cost of City Engineer's review |
| | d. Final Plat Fee | $100.00 + $90.00 per lot + actual cost of City Engineer's review |
| | e. Preliminary Plan Reinstatement/ Extension Fee | $100.00 |
| | f. Final Plat Reinstatement/Extension Fee | $100.00 |
| | g. Recording Fee | $50.00 per sheet + $2.00 per lot |
| | h. Inspection Fee | $418.00 per lot |
| | i. Subdivision & Building Bonds | |
| | (1) Performance and Guarantee | 120% escrow in bank |
| | (2) Infrastructure Protection Bond | $2,500.00 cash bond<br>$5,000.00 cash bond for corner lots or regular lots with more than 150 feet of frontage |
| | (3) Open Space Cash Bond | $2,500 minimum or as determined by City Engineer |
| | j. Storm Water Pollution Prevention Plan (SWPPP) Cash Bonds | |
| | (1) New Home | $2,000 |
| | (2) Subdivision | $200/lot or $2,000 minimum |
| | (3) Other | As determined by City Engineer |

| | | | |
|---|---|---|---|
| 6. | Publications | Electronic | Hard Copy |
| | a. General Plan | $15.00 | $10.00 |
| | b. Subdivision Ordinance | $15.00 | $30.00 |
| | c. Zoning Ordinance | $15.00 | $30.00 |

| | | |
|---|---|---|
| 7. | Site Plan Review Fee | |
| | a. Residential (not in approved subdivision) | $150.00 + actual cost of engineering review |
| | b. Commercial | $250.00 + actual cost of engineering review |
| 8. | Lot Line Adjustment | $75.00 |
| 9. | Annexation | |
| | a. Application Fee | $800.00 |
| | b. Plat Review Fee | $200.00 |
| | c. Annexation Study Fee | Actual Cost |
| 10. | Sign Permits | |
| | a. Application Fee | $25.00 |
| | b. Inspection Fee | Actual cost |
| | Application fee shall not apply to temporary non-profit signs. | |
| 11. | Utah County Surveyor Plat review fee | $125.00 |
| 12. | Preservation Coat | $0.25 per square feet of asphalt area |
| 13. | Street Light Connection Fee | $150.00 per light |

14. Credit Card payments will only be accepted for total payments not exceeding $1000.00

**F. PUBLIC WORKS:**

| | | |
|---|---|---|
| 1. | Streets | |
| | a. Street Dedication or Vacation | $300.00 |
| | b. Street Name Change Application | $100.00 |
| | c. New Street Sign for Name Change Approval | $75.00 per sign |
| 2. | Concrete Inspection Permits: | |
| | a. Curb and Gutter | $35.00 |
| | b. Sidewalk | $35.00 |
| 3. | Excavation Permits, Asphalt/Concrete Cuts/Unimproved Surface | |
| | a. Excavation bond | $4,000.00 |
| | b. Minimum fee for cuts in paved surfaces more than 3 years old | $300.00 + 1.50/sq. ft. |
| | c. Minimum fee for cuts in paved surfaces 3 years old or less | $300.00 + 3.00/sq. ft. |
| | d. Land Disturbance Permit | $300.00 |

4. Culinary Water Rates (Temporary disconnection is not permitted unless authorized by the Alpine City Administrator.):

   a. Box Elder and those portions of Willow Canyon and any other areas of the City that cannot be served by pressurized irrigation:

| Amount Used | Rate |
|---|---|
| 0 to 8,000 gallons per month (base rate) + meter fee | $17.00 |
| Each 1,000 gallons over 8,000 gallons to 60,000 gallons per month | $0.90 |
| Each 1,000 gallons over 60,000 gallons to 175,000 gallons per month | $1.40 |
| Each 1,000 gallons over 175,000 gallons per month | $2.80 |

b. All other users:

| Amount Used | Rate |
|---|---|
| 0 to 8,000 gallons per month (base rate) + meter fee | $17.00 |
| Each 1,000 gallons over 8,000 gallons to 10,000 gallons per month | $2.00 |
| Each 1,000 gallons over 10,000 gallons to 12,000 gallons per month | $3.00 |
| Each 1,000 gallons over 12,000 gallons per month | $4.00 |

c. Other utility fees and rates
   (1) Deposit of $100 refunded after one year of prompt payment
   (2) Transfer of service $25.00
   (3) Utility service connection $25.00
   (4) Delinquent & Disconnect/Reconnect
      a. First time annually $70.00 + 10% penalty (the $70.00 + 10% penalty will be waived if the customer signs up for automatic bill pay by credit card through Xpress Bill Pay)
      b. Subsequent times $45.00 + 10% penalty
   (5) Utility tampering fee $299.00

5. Culinary Water Meter Connection Fee (In Addition to Impact Fee)

| Minimum Lot Size Requirements | Meter Size | Fee |
|---|---|---|
| N/A | ¾" | $350.00 |
| One acre or larger or commercial use | 1" | $460.00 |
| As justified by engineering requirements | 1 ½" | $800.00 |
| As justified by engineering requirements | 2" | $1,000.00 |

6. Pressurized Irrigation Connection Fee (in addition to impact fee)

| Description | Meter Size | Fee |
|---|---|---|
| For connections installed as part of the original Pressurized Irrigation System | 1” | $550.00 |
| For connections installed as part of the original Pressurized Irrigation System | 1 ½” | $800.00 |
| As justified by engineering requirements | 2” | $850.00 |

7. Pressurized Irrigation Meter Connection Fee (in addition to impact fee and pressurized irrigation connection fee, if applicable)

| Description | Fee |
|---|---|
| 1” Meter installation with no provisions for meter | $585.00 |
| 1” Meter installation with provisions for meter | $520.00 |
| 1.5” Meter installation | $1,625.00 |
| 2” Meter installation | $1,680.00 |

8. Pressurized Irrigation Rates (Temporary disconnection is not permitted unless authorized by the Alpine City Administrator.):

| Users | Rate |
|---|---|
| All Users - meter fee | $1.00 |
| Residential Users | |
| (1) Non-shareholders in Alpine Irrigation Co. | $0.001112 per square foot per month |
| (2) Shareholders in Alpine Irrigation Co. | $0.000618 per square foot per month |
| Agricultural User | $1.15 per share per month |

9. Sewer Connection Fee $125.00

10. Sewer Usage Rate

| Amount Used | Rate |
|---|---|
| 0 to 2,000 gallons per month | $14.40 |
| Each 1,000 gallons over 2,000 gallons per month | $3.94 |

Sewer rates are based on average monthly water use from October 1 – March 30.

11. Storm Drain Usage Rate

| Parcels | Rate |
|---|---|
| Residential (1 ERU) | $5.00 per month |
| Commercial | The charge shall be based on the total square feet of the measured impervious surface divided by 4,200 square feet (or 1 ERU), and rounded to the nearest whole number. The actual total monthly service charge shall be computed by multiplying the ERU's for a parcel by the rate of $5.00 per month. See Municipal Code 14-403.6 for available credits. |
| Undeveloped | No charge |

| | | |
|---|---|---|
| 12. | Infrastructure Protection Violation | $300.00 |
| 13. | Monthly Residential Waste | |
| | a. Collection Fee (1st unit) | $11.50 |
| | b. Collection Fee each additional unit | $6.20 |
| | c. Recycling (1st unit) | $5.60 |
| | d. Recycling each additional unit | $5.35 |
| 14. | Transfer of Utility Service | $25.00 |

**G. PARKS**

| | | |
|---|---|---|
| 1. | Resident General City Park Reservation | $25.00 use fee |
| 2. | Non-resident General City Park Reservation (parks other than Creekside Park) | $75.00 use fee |
| 3. | Non-resident Creekside Park Reservation | $100.00 use fee |
| 4. | Sports Use of City Parks | |
| | Rugby, Soccer, Football, Baseball, etc. | $2 per player |
| | Outside Leagues | $10 per game |
| 5. | Mass Gathering Event | $150 use fee<br>$1,000 deposit |
| 6. | Lambert Park | |
| | Event - Resident | $25 + $150 deposit |
| | Event - Non-resident | $75 + $150 deposit |
| | Races in Lambert Park | $500 + mass gathering fee and deposit |
| 7. | Rodeo Grounds | |
| | Event - Resident | $25 + $150 deposit |
| | Event - Non-resident | $75 + $150 deposit |
| 8. | Moyle Park Wedding - 100 people or fewer | $100.00 |
| | Moyle Park Wedding - 100+ people | $200.00 |
| | Non-resident Moyle Park wedding 100 people or fewer | $200.00 |
| | Non-resident Moyle Park wedding 100+ people | $400.00 |

## H. IMPACT FEES

| | | |
|---|---|---|
| 1. | Storm Drain | $800.00 |
| 2. | Street | $1,183.32 |
| 3. | Park/Trail | $2,688.00 |
| 4. | Sewer | $492.66 |
| 5. | Timpanogos Special Service District (fee passed through) | $1,785.55 |
| 6. | Culinary Water with Pressurized Irrigation | $1,123.00 |
| 7. | Culinary Water without Pressurized Irrigation | $6,738.00 |
| 8. | Pressurized Irrigation | $0.095/square foot |

## I. CEMETERY

1. Above ground marker or monument (upright) $75.00

2. Single Burial Lot or Space
   a. Resident $985.00
   b. Non-Resident $1,500.00

3. Opening & Closing Graves*

| | Weekday | Saturday |
|---|---|---|
| Resident | $600 | $850 |
| Non-Resident | $1,000 | $1,500.00 |
| Resident Infant (under one year) | $125.00 | $350.00 |
| Non-Resident Infant (under one year) | $175.00 | $400.00 |

4. Disinterment $1,500.00
   City will remove all earth and obstacles leaving vault exposed.

5. Cremation
   a. Burial of ashes – Resident $500.00
   b. Burial of ashes – Non-Resident $500.00

6. Deed Work $50.00

6. *No Holiday Burials

J. SMALL WIRELESS FACILITIES RIGHT-OF-WAY RATES. The fee a wireless provider shall pay for the right to use the right-of-way shall be the greater of the following:

1. 3.5% of all gross revenue relative to the wireless provider's use of the right-of-way for small wireless facilities; or
2. $250 annually for each small wireless facility.

II. Other Fees

It is not intended by this Resolution to repeal, abrogate, annul or in any way impair or interfere with the existing provisions of other resolutions, ordinances, or laws except to effect modification of the fees reflected above. The fees listed in the Consolidated Fee Schedule supersede present fees for services specified, but all fees not listed remain in effect. Where this Resolution imposes a higher fee than is imposed or required by existing provisions, resolution, ordinance, or law, the provisions of this Resolution shall control.

III. This Resolution shall take effect on the_____day of_____, 2021.

PASSED this_____day of_____, 2021.

_____
Troy Stout, Alpine City Mayor

ATTEST:

_____
Bonnie Cooper
Alpine City Recorder

WILDING
ENGINEERING
14721 South Heritage Crest Way
Bluffdale, Utah 84065
801.553.8112

# AGREEMENT BETWEEN CLIENT AND ENGINEER

AGREEMENT ENTERED INTO AT Bluffdale, Utah made this **7th** day of **April, 2021** by and between **Alpine City**, hereinafter called "Client" and WILDING ENGINEERING, INC., a Utah corporation, hereinafter called "Engineer".

Client retains Engineer for services **Westfield Road sidewalk** Hereinafter called "Project".

A. Engineer agrees to perform the following scope of services: **As described in Engineer's Services, Sheets 2-3** **2-3**

B. Client agrees to compensate Engineer for such services: **$16,500.00**

An advance payment of **$0** is required, which will serve as retainer of Engineer's services, and will be credited towards the total contract amount listed above and applied in the final project invoice.

**This contract will be invoiced with progress billing.** Invoices will typically occur monthly, but may occur after completion of contract items listed on Engineer's Services, or at substantial completion of the project.

Payment Terms are typically *30 days* from the date of the invoice for established clients. This represents an extension of credit, and as such, late payments will be assessed a late charge APR of 18%.

C.

| | |
|---|---|
| Client's Contact | **Shane Sorensen** |
| Billing Address | **20 North Main Street Alpine, UT 84004** |
| Phone Number | **(801) 756-6347** |
| Alt. Phone \| Fax | **(801) 420-2962** |
| Email Address | ssorensen@alpinecity.org |

D. Work will commence upon receipt of a fully signed copy of this Agreement and any advance payment requested in item B above, which will serve to acknowledge approval of the terms contained herein. This agreement expires ninety (90) days from the date above unless executed.

E. This agreement is subject to the Terms and Conditions of Agreement Between Client & Engineer contained herein and made a part hereof.

**IN WITNESS THEREOF**, the parties hereby execute this Agreement on the date indicated above, and agree that it represents the entire Agreement between them and that the Client has read and accepts the Terms and Conditions, and Rate Schedule of this Agreement.

| **WILDING ENGINEERING, INC.** | | **CLIENT** | |
|---|---|---|---|
| Signature |  | Signature | |
| Print | Mike Carlton, P.E. | Print | |
| Title | Vice-President, Engineering | Title | |
| Date | April 7, 2021 | Date | |
| Job Number | | | |
| Project Manager | | | |

## ENGINEER'S SERVICES

**1 Right of Way Survey** $3,600.00

We will prepare a Right-Of-Way Survey for the proposed project length of Westfield Road. The survey will be prepared in accordance with nationally established standards. Occupation improvements will be shown on the survey and we will include a description of their character and where they lie in relationship to the boundary lines. When completed, the survey will be certified and a copy will be filed at the office of the County Surveyor as required by State law. This survey will not be based on a Title Report. The property corners along the right-of-way will be marked with a steel rebar and plastic cap, accompanied by a wooden lath. We will prepare descriptions, as needed, for the city to obtain easements and/or right-of-way acquisition.

**2 Topo Site Survey** $1,200.00

The Topographic Survey will be prepared in accordance with National mapping standards. The survey will include the existing road, surface utilities, driveways, and other items that are necessary for the preparation of design documents for this project. The contour interval for this map will be 1 foot. Although we will survey any property corners we find on site during the field work, this item does not include any boundary survey work.

**3 Construction Drawings** $1,800.00

An overall drawing will be provided showing the new sidewalk, retaining walls, and driveway tie-ins. It is assumed that utility design will not be needed, except for a modified storm drain outfall at two locations. The typical cross section of the proposed street will be shown.

**4 Site-Specific Soil Testing and Report for wall designs** $1,000.00

We understand two single-tiered verti-block retaining walls are proposed. The existing walls will be removed for the construction of the new walls. The wall north of the road will be up to 10 feet in exposed height and the wall south of the road will be up to 8 feet in exposed height. Both walls combined are approximately 400 feet in length. Site-specific soil testing results are required by Alpine city. This proposal includes 1 site visit to collect samples of the native soils and observe the existing site conditions. The soils will be observed and collected under the direction of the geotechnical engineer. Laboratory testing will be performed on the soil samples. Laboratory tests may include, but not limited to moisture content, unit weight, Atterberg limits, grain size analysis, and direct shear tests.

**5 Retaining Wall Design** $4,200.00

We anticipate the retaining walls will use a verti-block wall system. Profile drawings, site plans showing wall locations and cross section details of the walls showing block type and size, drainage, staking method, retained soil height, etc. will be prepared. Engineering analysis including wall stability analysis and global stability analysis will be provided. The final design will be stamped by a Professional Engineer and provided to the Client for construction and/or review by the building official of Alpine City.

**6 Construction Staking** $1,400.00

Construction staking will consist of staking the new retaining walls. It is anticipated that each wall will be staked once for rough grading and subgrade prep and then again for construction. Restaking for lost, removed, or damaged stakes will be invoiced hourly.

Contract Reviewed By:

| | | |
|---|---|---|
| **7** | **Retaining Wall Construction Observation**<br>As required by Alpine City, preconstruction meeting with City Building Official and observations during the retaining wall construction process will be performed and a final report will be provided to evaluate if the retaining walls are built according to the submitted design. The proposed cost includes 5 site visits and the final report. Any additional visits will be billed hourly in addition to this proposed cost. | $1,500.00 |
| **8** | **Construction Materials Testing**<br>Construction materials testing for this project will consist of 1) compaction testing of the roadbase for the retaining wall and the sidewalk (using a pit proctor provided by the contractor), and 2) concrete testing (slump, air, temperature, and 4 cylinders for compression strength testing) of the sidewalk. **NOTE: This will be invoiced hourly. The amount shown for this contract item is an estimated budget amount.** | $1,400.00 |
| **9** | **On-call design support during construction**<br>At the owners request, we will visit the site during construction to assist in design issues that may arise during construction. **NOTE: This will be invoiced hourly. The amount shown for this contract item is an estimated budget amount.** | $400.00 |
| **10** | **Additional Services**<br>Any services not specifically described above are excluded from the scope of work. Additional services can be provided per a separate agreement or on an hourly basis per the attached rate schedule. These services include but are not limited to: Project meeting attendance, off-site improvement design or surveying, and construction record drawing preparation. | hourly |
| | **TOTAL** | **$16,500.00** |

Contract Reviewed By:

## TERMS & CONDITIONS OF AGREEMENT BETWEEN CLIENT & ENGINEER

**Binding of Parties**
The Client binds himself, his partners, successors, executors, and administrators, and assigns to the Engineer and to this agreement in respect to all of the terms and conditions of this agreement.

It is the practice of this office, when providing services to closely held corporations, partnerships or limited liability companies, to require the major shareholders, partners or members to assume responsibility for payment of our fees in the event the entity does not pay. Your signature on this Agreement constitutes your personal guarantee.

**Billing**
All fees and other charges will be billed either monthly, or after completion of contract items listed on Engineer's Services, or at substantial completion of the project, and are due upon presentation and shall be considered past due if not paid within thirty calendar days from the date of the invoice unless otherwise specified in agreement.

**If payment in full is not received by Engineer within thirty (30) calendar days of the due date, invoices shall bear interest at one-and-one-half (1.5) percent of the PAST DUE amount per month, which shall be calculated from the invoice due date. Payment thereafter shall first be applied to accrued interest and then to the unpaid principal**.

Client hereby agrees that the balance as stated on the billing from the Engineer to Client is correct, conclusive and binding on the Client unless Client within five (5) business days from the date of the making of the billing notifies Engineer in writing of the particular item that is alleged to be incorrect.

Payment of Engineer's services is not contingent on any of the following: any loan of any type in existence or any loan to be funded in the future, project approval or completion, real estate transactions or property ownership status.

The hourly rate schedule may be periodically adjusted by Engineer. This may occur as yearly increases, or as needed for individual contracts with contract terms longer than one year. Proposed changes to the attached rate schedule before a contract is completed will require a signed agreement between the Client and Engineer.

Payments via credit card will have a **3%** processing fee added to the total charge.

Retainers or advance fees shall be credited against final payment.

**Liens**
The terms and provisions of this agreement shall not be construed to alter, waive, or affect any lien or stop notice rights, which the Engineer may have for the performance of services under this agreement.

A mechanics lien may be filed for any invoice remaining unpaid after sixty (**60**) days from the date of invoice. In the event a lien is filed by Engineer due to failure of Client to pay any amount claimed due by Engineer, Client agrees to pay a lien fee of $300.00 to record and release the lien as may be requested by Engineer.

**Changes in Scope**
Contract fees presented in this Agreement shall be for the scope of services specified.

Changes to the scope of work will normally be done by a change order which includes a detailed description of the work task and an associated cost. The change order will be approved by the signature of both parties.

For any work performed which is outside the original Scope of Work of this agreement or any associated Change Order, when directed in writing by Client's duly authorized representative or agent, the Engineer will be entitled to compensation on either a time and materials basis, or an agreed fee amount.

The Client shall pay the costs of all fees, materials and equipment costs, and any other charges not specifically covered by the Engineer's Services, including but not limited to: regulatory agency application, inspection or modeling fees, assessment fees, permits, bond premiums, title company charges, and real estate fees. Any such charges paid by Engineer shall be invoiced to Client at 1.15 times actual cost.

Assistance provided to Client after plans are completed such as responding to contractor inquiries, assisting with bidding process, clarifying or interpreting design documents, coordinating with utility companies, providing cost estimates other than as described under Engineer's Services and providing construction support services, shall be billed as Additional Services in accordance with the contract Rate Schedule. All revisions and rework due to, or caused by, Client or review agency preference rather than published standards will be billed as Additional Services in accordance with the Rate Schedule.

**Point of Substantial Completion**
To the fullest extent permitted by law, all causes of action arising under this Agreement shall be deemed to have accrued, and all statutory periods of limitation shall commence, no later than the date of Substantial Completion.

**Standard of Care**
Engineer makes no warranty, either express or implied, as to his findings, recommendations, specifications, or professional advice except that the work was performed pursuant to generally accepted standards of practice in effect at the time of performance.

The Engineer makes no representation concerning the estimated quantities and estimated cost figures for construction made in connection with maps, plan specifications, or drawings other than that all such figures are estimates only and the Engineer shall not be responsible for fluctuations in cost factors or variations from actual cost at the time of construction.

In the event that suspected errors or omissions are discovered in the Engineer's work by Client, primary contractor, or others, Client agrees to give immediate notice to Engineer (not more than three (3) days), and to include this notice provision in agreements with other parties on the project, thus allowing Engineer to respond to claims or seek solutions, and to minimize costs attributable to said claims. Costs which could have been avoided with timely notice to Engineer will become the responsibility of the Client.

Client assumes sole responsibility for determining whether the quantity and nature of work ordered by Client is adequate and sufficient for Client's intended purpose.

**Ownership of Documents**
All reports, drawings, plans, specifications, calculations, electronic files, field data, notes and other documents and instruments, and copies thereof, regardless of medium of content, produced as a result of this contract, except documents which are required to be filed with public agencies, shall remain the property of the Engineer (which includes copyright and intellectual property rights) as instruments of service, and may be used by Engineer without consent of Client. Client is granted a non-exclusive, non-transferable license to use said instruments on and for this project only.

**Assignments**
Neither the Client nor Engineer shall assign or transfer his interest in this agreement without the written consent of the other.

**Third Parties**
Engineer does not guarantee the completion or quality of performance of contract or contracts by the construction contractor or contractors, or any other third parties, nor is he responsible for their acts or omissions.

Nothing contained in this Agreement shall create a contractual relationship with or a cause of action in favor of a third party against either the Client or the Engineer. The Engineer's services under this Agreement are being performed solely for the Client's benefit, and no other party or entity shall have any claim against the Engineer because of this Agreement or the performance or nonperformance of services hereunder. The Client and Engineer agree to require a similar provision in all contracts with contractors, subcontractors, subconsultants, vendors and other entities involved in this project to carry out the intent of this provision.

**Indemnity**

The Engineer is not responsible for delay, nor shall Engineer be responsible for damages or be in default or deemed to be in default by reason of strikes, lockouts, accidents, acts of God, the failure of Client to furnish timely information or to approve or disapprove Engineer's work promptly, delay or faulty performance by Client, other contractors, or governmental agencies, or any other delays beyond Engineer's reasonable control.

Engineer shall not be liable for damages resulting from the actions or inaction of governmental agencies; including but not limited to permit processing, environmental impact reports, dedications, general plans and amendments thereto, zoning matters, annexations or consolidations, use or conditional use permits, and building permits; and Engineer shall only act as an advisor in all governmental relations.

Engineer makes no representations concerning soil conditions unless specifically included in writing in this agreement or provided in Engineer's written report, and is not responsible for any liability or damages that may arise out of the making or failure to make soil surveys, subsurface soil tests, or general soil testing, and the discovery of hazardous materials and/or debris.

In the event that any changes are made in the plans and specifications by the Client or persons other than the Engineer, which affect the Engineer's work, including unauthorized reuse of documents on projects outside the scope of this contract, all liability arising out of such changes or use and their consequences, is waived as against the Engineer, and the Client assumes full responsibility for such changes, unless Client has given Engineer prior notice and has received from Engineer written consent for such changes.

Engineer has no duty to defend client against claims relating to the project, unless and until Engineer is found to be legally negligent. Engineer is only liable for Engineer's percent of negligence.

The Client agrees that in accordance with generally accepted construction practices, the construction contractor will be required to assume sole and complete responsibility for job site conditions during the course of construction of the project, including safety of all persons and property; that this requirement shall be made to apply continuously and not be limited to normal working hours; and the Client further agrees to defend, indemnify and hold the Engineer harmless from any and all liability, real or alleged, in connection with the performance of work on this project, excepting liability arising from the sole negligence of the Engineer.

Client acknowledges that construction inspection, observation, and testing services provided by Engineer are techniques which may reduce the risk of construction defects, deficiencies or omissions arising during or after construction. Even with diligent construction monitoring and/or testing by Engineer, construction defects, deficiencies, or omissions in the Contractor's work may exist. In all cases, Client and/or the Contractor shall assign the Contractor the responsibility for the quality and completeness of the work and for adhering to plans and specifications. Engineer's work or failure to perform same shall not in any way excuse any contractor, subcontractor, or supplier from performance of its work in accordance with the construction documents.

Plans prepared by the Engineer commonly show the location of existing underground utilities as approximate. Client agrees that in accordance with generally accepted construction practices, the construction contractor shall determine the exact location of all existing utilities before commencing work and shall be fully responsible for any and all damages occasioned by this failure to locate and preserve said utilities. Engineer shall be notified immediately (not more than three (3) days) if conflicts with existing utilities exist.

**Limitation of Liability**

THE CLIENT AGREES TO LIMIT THE ENGINEER'S LIABILITY TO THE CLIENT AND TO ALL CONTRACTORS AND SUBCONTRACTORS ON THE PROJECT, DUE TO PROFESSIONAL NEGLIGENT ACTS, ERRORS, OR OMISSIONS OF THE ENGINEER TO THE SUM OF **$25,000** OR THREE TIMES THE ENGINEER'S FEE, WHICHEVER IS GREATER. This limitation applies to every legal theory or cause of action, including negligence, breach of contract and warranty, and is enforceable to the fullest extent permitted by law.

**Disputes**
It is the general intent of the parties that any dispute relating to this Agreement or the Engineer, that the dispute shall be settled first by good faith negotiation. In the event the parties do not negotiate a settlement, the parties agree to participate in a minimum of six (6) hours of mediation in accordance with the procedures set forth by the American Arbitration Association, the costs of which shall be shared equally between the parties and shall be held in Salt Lake County, Utah.

In the event the dispute is not resolved during mediation, and the disputed amounts are less than $75,000, the dispute may be resolved via binding arbitration based upon the rules and terms set forth in the preceding paragraph, except that the prevailing party shall be entitled to recover from the other party all reasonable attorney's fees, costs and expenses incurred. Only in the event both parties elect to waive the mediation or arbitration requirements of this agreement, or if the dispute wasn't solved in mediation and is over $75,000, then may litigation be commenced against Engineer for any alleged failure to perform, error, omission, or negligence; and the prevailing party shall be entitled to recover from the other party all reasonable attorney's fees, costs and expenses incurred.

The proceeding paragraphs do not apply to prevent Engineer from enforcing any term or condition of this Agreement or from commencing litigation to collect any amounts due from Client, and the defaulting party shall be responsible for all reasonable attorney's fees, costs and expenses incurred.

Client and Engineer agree to waive all consequential damages that may occur, and neither party will be responsible for their payment.

**Default**
In the event Client fails to pay Engineer within thirty (30) days after invoices are rendered, Client agrees that Engineer shall have the right to consider said default a total breach of this Agreement and, upon written notice, the duties, obligations and responsibilities of the Engineer under this Agreement are terminated. In such event, Client shall then promptly pay the Engineer for all fees, charges, and services provided by Engineer.

**Termination**
This agreement may be terminated: (i) by either party upon seven (7) days written notice should the other party fail to substantially perform this agreement through no fault of the party initiating the termination; (ii) by Client upon at least seven (7) days written notice to Engineer in the event that the project is permanently abandoned, or; (iii) by Engineer in the event its services are suspended for a period exceeding thirty (30) days. If this agreement is terminated through no fault of the Engineer, Client shall pay Engineer for services performed and reimbursable expenses incurred in accordance with this agreement and, upon request, a Termination Adjustment equaling fifteen percent (15%) of the estimated compensation remaining to be earned at the time of termination to account for Engineer's rescheduling adjustments, reassignment of personnel and related costs incurred due to termination.

In the event this Agreement is terminated by any party for any reason, the Engineer shall be paid by the Client for all services provided on a time and materials basis, for work completed and not previously paid for, on the date notice of termination is given. Should a dispute arise between the parties as to the work completed by the Engineer the Client shall have the right to audit the cost records and time records of the Engineer to the extent that they relate to the services provided hereunder.

**Suspension and Abandonment of Project**
In the event all or any portion of the work prepared or partially prepared by the Engineer be suspended, abandoned, or terminated, the Client shall pay the Engineer for all fees, charges, and services completed for the project, not to exceed any contract limit, including assessed finance charges, specified herein. If directed by Client to restart work on project after a suspension of at least ninety (90) days, Engineer shall be entitled to a restart fee of no less than 10% of total contract amount, to be negotiated prior to start of work.

**Severability**
In the event any provision of this agreement shall be held to be invalid and unenforceable, the other provisions of this agreement shall be valid and binding on the parties hereto.

**Venue**
Venue and jurisdiction are established in Salt Lake County, Utah.

## RATE SCHEDULE

### ENGINEERING

| | |
|---|---|
| Principal Engineer | $135.00 Per Hour |
| Expert Witness (P.E.) | $260.00 Per Hour |
| Professional Engineer | $110.00 Per Hour |
| Geotechnical Engineer | $110.00 Per Hour |
| Project Manager | $84.00 Per Hour |
| Staff Engineer | $75.00 Per Hour |
| Environmental Professional | $78.00 Per Hour |
| Civil Designer | $72.00 Per Hour |
| Secretarial Services | $37.00 Per Hour |

### MATERIALS TESTING

| | |
|---|---|
| Civil Inspector | $50.00 Per Hour |
| Special Inspections (4 hr. min) | $57.00 Per Hour |
| Materials Testing Technician (Minimum daily charge of 2 hours) | $50.00 Per Hour |
| Soils Percolation Test (Price may vary depending on location, quantity, and site | $480.00 |
| Mileage | $0.60 Per Mile |

### GENERAL

| | |
|---|---|
| Materials and Expenses | Cost + 15% |
| Mylar Color Plots | $12.00 |
| Mylar Black and White Plots | $8.00 |
| Color Plots | $8.00 |
| Black and White Plots | $5.00 |
| 11 x 17 Color Prints | $3.00 |
| 11 x 17 Black and White Prints | $1.50 |
| Copies | $1.00 |
| Mileage | $0.60 Per Mile |

### SURVEYING

| | |
|---|---|
| Principal Surveyor | $135.00 Per Hour |
| Expert Witness (P.L.S.) | $260.00 Per Hour |
| Professional Surveyor | $110.00 Per Hour |
| Survey Drafter | $65.00 Per Hour |
| Survey Crew w/equipment (1 man) | $110.00 Per Hour |
| Survey Crew w/equipment (2 man) | $170.00 Per Hour |

### LABORATORY TESTS (AMRL & CCRL Cert.)

| | |
|---|---|
| Asphalt Core Specific Gravity | $20.00 Per Core |
| Atterberg Limits | $78.00 |
| California Bearing Ratio (one point) | $80.00 |
| California Bearing Ratio (three points) | $200.00 |
| Consolidation Test | $300.00 |
| Cylinder Breakage (Plus technician time and mileage.) | $18.00 Per Cyl. |
| Direct Shear Test (Consolidated Drained) | $375.00 |
| Fines Content Analysis | $52.00 |
| Fractured Face Testing | $30.00 |
| Gradation (Sieve) Analysis | $78.00 |
| Hydrometer Analysis | $168.00 |
| L. A. Abrasion Test | $250.00 |
| Moisture Content | $10.00 |
| Proctor (Modified or Standard) (Where sample is not provided, time and mileage are added.) | $147.00 |
| Sand Equivalency Test | $65.00 |
| Specific Gravity (coarse aggregate) | $50.00 |
| Specific Gravity (fine aggregate) | $60.00 |

**Revised:** 5/1/2018 rew

Contract Reviewed By:

# ALPINE CITY COUNCIL AGENDA

**SUBJECT: ACE Disposal Contract Extension and Other Services**

**FOR CONSIDERATION ON: 25 May 2021**

**PETITIONER: City Staff**

**ACTION REQUESTED BY PETITIONER: Approve the 3-year contract extension with ACE Disposal for solid waste services.**

**BACKGROUND INFORMATION:**

Alpine City issued an RFP for solid waste services in 2018. ACE Disposal was awarded the contract. The original contract included a 5-year term, with an automatic extension clause for an additional two three (3) year terms, unless either party gives the other notice that it intends not to extend the contract. There is a provision in the contract for an increase or decrease in fees. Based on the Consumer Price Index the proposed increase for this year is 1.4% and an increase tipping fees from $25 to $29/ton. With some changes in options for residential drop off of solid and green waste, we have been in discussions with ACE Disposal for options of other services. We have invited representatives from ACE Disposal to attend the City Council meeting to present options for other services and the associated costs.

**STAFF RECOMMENDATION:**

**SAMPLE MOTION TO APPROVE:**
**I move to approve the contract extension with ACE Disposal through June 30, 2024, with the addition of the following options:**

- **<insert options>**

# CONTRACT

THIS CONTRACT is made and entered into this 12th day of March, 2013, by and between Alpine City, a corporation of the State of Utah (hereinafter called the "City", and Ace Disposal, Inc. hereinafter called "Contractor".

WHEREAS, the Contractor has previously submitted a written proposal to provide residential solid waste collection and disposal services within the boundaries of the City and to perform such work as may be incidental thereto; and

WHEREAS, the City desires to have the Contractor perform residential solid waste collection and disposal in accordance with the terms of this Contract.

NOW, THEREFORE in consideration of the mutual covenants contained herein and other good and valuable consideration, the receipt and sufficiency of which is hereby acknowledged, the parties hereby agree as follows:

1. The Contractor hereby agrees to furnish all personnel, labor, equipment, vehicles, and other items, necessary to provide the automated residential solid waste collection and disposal pursuant to the terms of this Contract and the General Specifications attached hereto.

2. The Contractor shall strictly comply with all provisions of this contract and the attached General Specifications. No amendment to the Contract or the General Specifications shall be made unless in writing and signed by the parties hereto.

3. The term of this Contract is five (5) years commencing on July 1, 2013 and ending June 30, 2018 unless sooner terminated for cause by the City as provided for in the General Specifications. This contract will be automatically extended for an additional two three (3) year terms unless either party gives the other notice that it intends to not extend the contract. The notice to not extend must be given at least ninety days prior to June 30, 2018.

4. This Contract, along with the attached General Specifications, contains the entire agreement of the parties with respect to the subject matter hereof as of its date, and no prior promises, representative, warranties, inducements, or understanding between the parties with respect to the subject matter hereof which are not contained herein shall be of any force or effect.

5. The parties herein each agree that should they default in any of the covenants, performance or agreements contained herein, the defaulting party shall pay all costs and expenses, including a reasonable attorney's fee which may arise or accrue from enforcing this agreement or in pursuing any remedy provided hereunder or by the statutes or other laws of the State of Utah, whether such remedy is pursued by filing suit or otherwise, and whether such costs and expenses are incurred with or without suit before or after judgment.

6. The City agrees to pay during the first contract year, and the contractor agrees to accept such amounts as listed in the City's fee schedule as shall be approved by the City Council. This fee shall be adjusted for each subsequent contract year, upward or downward to reflect changes in the cost of operations as measured by the Wasatch Front Wells Fargo Consumer Price Index.

7. If any provision or part of this Contract shall be declared illegal, void or unenforceable for any reason, the other provisions and parts shall not be affected but shall remain in full force and effect.

8. The Contract shall be governed by the laws of the State of Utah both as to interpretation and performance.

IN WITNESS WHEREOF, the parties hereto have executed this agreement by and through their duly authorized representatives as of the day and year first herein written above.

ALPINE CITY

By: _____

Mayor

ATTEST: _____

City Recorder

Alpine City CORPORATE Seal Utah County, Utah

ACE DISPOSAL, INC.

By: _____

Richard Hamit

Its: Sales manager

## IV.

## COST PROPOSAL

A. Ace is requesting that Alpine City allow a yearly cost of living increase/decrease based on the Consumer Price Index published by the U.S. Department of Labor, Bureau of Labor Statistics, West Urban. Our initial price quoted in this proposal is firm for the first year and a COLA request would be submitted annually thereafter.

**The completed pricing sheet along with optional programs and pricing follows this page.**

B. Ace **is not** requesting a fuel surcharge for the term of this contract.

**C.** The cost proposal submitted by Ace does not contain any form of a fuel surcharge.

## EXHIBIT E – PROPOSAL PRICE SHEETS

Provide a price for the following as if the Contractor has the total responsibility of the waste collection, including providing and maintaining the containers. Your price for this section should be for the collection, hauling and disposing, including providing the containers, and bearing all costs incurred therewith regardless of the cause to maintain the containers.

| | 1st Container Monthly Unit Price | Additional Container Monthly Unit Price |
|---|---|---|
| Residential Waste Collections, Delivery & Disposal: | | |
| Municipal Waste, 90 Gal Min. Carts, Weekly: | $4.89 | $2.50 |
| Residential Recyclable Materials Collection & Processing: | | |
| Current **Opt-in** Recycling, 90 Gal Min. Carts, Bi-Weekly: | $4.45 | $4.45 |
| Recycling Profit Sharing – Percentage Based: | | |
| Please identify percentage-based profit sharing under the terms of this RFP: | %50 of Net<br>Minimum Guarantee $7.50 per ton. | |
| Residential Recycle Opt-Out | $3.85 | $3.85 |
| Residential Recycle City Wide | $3.30 | $3.30 |

# PRICE SHEET FOR OPTIONAL SERVICES

## LANDFILL OPTION

Ace will deliver all trash to the Intermountain Regional Landfill located in Fairfield. **Alpine City would be charged $23.00 per ton. This price will be guaranteed for 5 years with no increase in hauling charges.**

## GREEN WASTE COLLECTION (WEEKLY APRIL – NOVEMBER)

| | 1st Cart | 2nd Cart |
|---|---|---|
| OPT-OUT (minimum of 30 % participation) | $ 5.50 (Includes Landfill Fees) | $5.50 |

## NEIGHBORHOOD ROLL-OFF DUMPTSTERS

| | |
|---|---|
| DELIVERY and REMOVAL | $ 130.00 (Plus Landfill Fees) |

## CHRISTMAS TREE COLLECTION

**THIS SERVICE WILL BE PROVIDED FREE OF CHARGE**

## DOCUMENT DESTRUCTION AND E-WASTE DROP-OFF

**THIS SPECIAL EVENT IS OFFERED FREE OF CHARGE**

## GENERAL SPECIFICATIONS

# RESIDENTIAL SOLID WASTE COLLECTION & DISPOSAL

## Table of Contents


1. CONTRACT TERM ..... 4
2. BACKGROUND ..... 4
3. SCOPE OF SERVICES ..... 4
I. WASTE COLLECTION ..... 5
II. RECYCLABLE MATERIALS COLLECTION ..... 8
III. OTHER SERVICES ..... 10
4. GENERAL COLLECTION OPERATION ..... 10
5. COST PROPOSAL ..... 14
6. PROOF OF INSURANCE ..... 14
7. BONDING ..... 16
8. COMMENCEMENT OF WORK ..... 18

EXHIBIT A – CITY MAP ..... 19

EXHIBIT B – CITY PROPERTIES ..... 20

## 1. CONTRACT TERM:

The agreement with the successful proposer shall be in accordance with requirements set forth in the terms of agreement of this RFP. The contract shall begin July 1, 2013. The term of this contract shall be for a period of five (5) years. At the option of the City and the Contractor, the agreement may be extended for two (2) additional three (3)-year terms. The City may exercise the option to extend by providing written notice to the Contractor not less than 60 days prior to the termination date of the current term. It shall be the duty of the Contractor to notify the City within six (6) months prior to the expiration of the agreement period that such agreement period is approaching its termination date.

The contract may be terminated at any time by the City of Alpine with advance written notice of at least ninety (90) calendar days. On termination of this contract, all accounts and payments will be processed to date of termination for approved services according to the financial arrangements set forth in this RFP

All provisions of the agreement must be in compliance with established state and local laws and ordinances of the State of Utah and its political subdivisions. A work stoppage by the Contractor's work force shall not be grounds for the Contractor to terminate this agreement. The Contractor will still be required to complete any and all obligations under this agreement, even if it is affected by a strike, job action or other disruptive labor activity.

## 2. BACKGROUND:

The City currently has a contract for the collection, delivery, and disposal, of waste and recyclables. Recycling is an opt-in program with service provided every other- week.

The number of containers as of January 2013 is as follows:

Waste Containers – 2,294
Additional Waste Containers – 1,284
Recycle Containers – 1,071
Additional Recycle Containers - 65

## 3. SCOPE OF SERVICES:

The work under the contract shall consist of the items contained in the proposal, including all the supervision, materials, equipment, labor and all other items necessary to complete said work in accordance with the contract documents. The major item of work is weekly collection of solid waste from all residential units in the City. However, collection of solid waste from any residential building containing more than three units or from any commercial or private industrial establishment is not part of this contract. Work under this contract includes collection of solid waste from all City facilities and special events.

Landfill tipping fees for residential solid waste will be paid by the City and are not to be included in the proposal.

The Contractor shall furnish and maintain the automated-collection containers for regular automated collection. All containers shall be a minimum of 90 gallon capacity.

The City seeks to protect and enhance the environment, to minimize the consumption of non-renewable materials, and to divert as much material from the waste stream as possible. It is, therefore, a goal of the City to promote recycling as a foundation for the City's sustainability goals to recycling, while providing efficient and safe refuse collection services for its residents.

It is of the utmost importance that the services required under this contract be provided in a reasonable and responsive manner sufficient to develop and sustain adequate public acceptance and support of Contractor's services. As a condition of accepting this contract, Contractor assures that service will be performed in this manner and to adhere to the following:

## I. Waste Collections, Delivery and Disposal:

A. Proposals shall include the total collection, delivery and disposal of residential municipal waste according to such rules as may be applicable to the City.

B. The service shall include collection of municipal waste from City residents and the collection of municipal waste generated by City-operated facilities. Waste generated by private commercial, industrial and institutional establishments, such as professional offices, schools, and churches, are **NOT** included under this contract.

C. The solid waste shall be delivered to the North Pointe Transfer Facility in Lindon, Utah, or as otherwise designated and agreed upon by the City of Alpine and the Contractor.

D. The work includes the furnishing of all labor, staff, vehicles, containers, and all other equipment and materials required for the prompt and efficient collection and removal of all residential municipal waste accumulated in the present boundaries of the City as indicated on the accompanying map entitled: "Map of Municipal Collection Areas" (refer to EXHIBIT A).

E. The collection and disposal of residential waste is to be for all residential dwellings (except for residential buildings containing more than three residential dwelling units) as well as all City properties (refer to EXHIBIT B). Work under this contract includes collection and disposal of all garbage and rubbish from all City facilities at no cost to the City. Additional facilities may be added, and the container size and collection schedule may be modified over the term of the contract.

F. The Contractor shall collect municipal waste from all residential dwellings in the City except for buildings containing more than three residential dwelling units, (for example, duplexes and triplexes would be included in the contract while fourplexes would not be included); this may include private communities if they desire the designated services.

Communities and developments that contract through their homeowner's association for garbage collection are prohibited from participating in any Citywide collection program.

G. The work to be done shall also include collection and disposal of waste from City properties that include City owned buildings and parks. The City will determine what type of containers will work best for each location. The number of required waste pick-ups may vary throughout the year, and the City may modify the containers or collection schedule as necessary.

H. Contractor's attention is called to the fact that the quantity to be collected will vary during the life of the contract period. Regardless of quantity, the Contractor is obligated to meet all conditions of the pertinent specifications.

I. The curbside collection of residential municipal waste shall be once a week. The capacity of the containers shall be 90 gallons minimum. The Contractor has the total responsibility of residential municipal waste collection, delivery and disposal.

J. The Contractor shall maintain a local telephone line or toll free line. The Contractor shall have a clerk available to receive instructions from a City representative and to receive and process inquiries from the public during the business hours of 8:00 A.M. to 5:00 P.M., Mountain Standard Time, Monday through Friday and on Saturday from 8:00 A.M to 12:00 P.M. for the term of the contract. The Contractor will provide a 24-hour, 365-day emergency telephone number that can be used to reach a supervisor. The Contractor shall have on duty on all collection days at least one (1) qualified supervisor to be in the field when the collection is being carried out, to ensure a courteous, prompt, and efficient method for dealing with requests for service or missed collections.

K. Twice a week, the City shall provide a list to the Contractor of containers that need to be delivered for new accounts as well as containers that need to be picked up or repaired. The delivery of the new containers and the pickup and repair of containers included on the list will be completed within 48 hours and the list returned to the City on the same weekly schedule.

L. The Contractor will be required to record all inquiries and complaints received on a form approved by the City and supplied by the Contractor. The form will be summarized on a monthly basis by the contractor and delivered to the City on a monthly basis or more frequently if requested by the City.

M. The Contractor shall do all work in such a manner as to not create a nuisance. Any waste spilled or scattered on sidewalks, gutters or roadways during collection shall be immediately cleaned up by the Contractor.

N. There shall be no deviations from the established schedule, except for the following days when North Pointe Transfer Station or other designated facility is closed: New Year's Day, Memorial Day, Independence Day, Pioneer Day, Labor Day, Thanksgiving Day, and Christmas Day.

Residences scheduled for collection on these holidays shall have collection service for solid waste on the following day and delay collection one day for the remainder of that week or other time as may be agreed on between the Contractor and the City. The City's contract manager shall approve the manner of notification.

O. The Contractor understands that the City area is subject to intense and inclement weather conditions including, but not limited to, snow, high velocity winds, fog, rain, and heat and flooding. The proposer understands it is responsible for providing solid waste collection services, as safety procedures allow, for as long as the contract continues in force. The Contractor is responsible for making all reasonable efforts including, but not limited to, additional trucks, personnel and tire chains, to continue to provide consistent reliable service.

P. The work under this contract does not include the collection and disposal of any increased volume resulting from a flood, hurricane or other act of God, or any other event over which the Contractor has no control. In the event of such a flood or other act of God event, the City shall grant the Contractor variances in routes and schedules as may be deemed necessary by the Contractor. In addition, the City and the Contractor shall negotiate in advance of performance the amounts to be paid to the Contractor for services to be performed as a result of the increased volumes resulting from such act or event.

Q. The Contractor shall notify residents in writing of any scheduling changes.

R. The Contractor shall collect all residential solid waste as defined in this document. The Contractor shall not be required hereunder to provide collection service for non-processable waste.

S. The Contractor will collect no hazardous wastes unless specifically requested by the resident, approved by the City and agreed to by the Contractor.

T. The Contractor shall not be required to collect solid waste unless it is in an approved garbage container of 90 gallon minimum capacity, except as otherwise provided for in this agreement.

U. All approved garbage containers shall be placed within two feet of the blacktop or in the gutter if curb and gutter is present, and at a location that is readily accessible to the Contractor and its equipment, unless previous arrangements are made between the resident and the Contractor.

V. The Contractor shall replace or repair all damaged containers provided by the Contractor at no additional charge.

## II. Recyclable Materials Collection, Processing and Marketing (Opt-in Program):

A. The recyclable materials shall be delivered to the North Pointe Transfer Facility in Lindon, Utah or other designated facility as agreed upon by the City of Alpine and Contractor.

B. The Contractor shall provide the residents with a list of acceptable recyclables. Recyclable materials shall include aluminum cans, tin and other metal tops and cans, paper (including office, news, and slick paper), plastic beverage containers and bottles PET (1) and HDPE (2), and other plastics (3-7), and corrugated cardboard. The Contractor shall provide an expanded list of materials that can be recycled. The product list may be amended by the Alpine City Manager or his designee(s), on an annual basis after review of market viability with the Contractor. The Contractor shall sort, weigh and process all collected materials at its site. The Contractor shall market all recyclables collected by way of end user contracts.

C. The work includes the furnishing of all labor, staff, vehicles, containers, and other equipment and materials required for the prompt and efficient collection and transportation of all recyclables to be collected under this contract within the present boundaries of the City as indicated on accompanying map (refer to EXHIBIT A).

D. The Contractor shall adequately clean up any materials spilled or blown during the course of collection and/or transportation operations. The Contractor shall have no responsibility to remove or clean up any unacceptable items which are rejected, and which have not been handled due to insufficient material preparation by residents.

E. The Contractor shall establish a procedure for receiving and responding to all complaints of missed pick-ups similar to the procedure mentioned in solid waste pick-ups.

F. The Contractor shall supply automated collection vehicles and containers of 90 gallon minimum capacity for the sole purpose of collecting recyclables, which are capable of transporting the recyclables in a condition to maximize marketability.

G. The work to be done shall include bi-weekly collection of all recyclables designated by the City from all residential properties, which receive municipal waste collection services and subscribe for the service. Recyclables shall be collected on the same days as municipal waste collection.

H. There shall be no deviation from the established schedules, except for those outlined in the municipal Waste Collections, Delivery and Disposal contract.

I. The Contractor shall be required to conduct certain publicity and education efforts to encourage the maximum level of citizen participation in recycling and waste diversion/reduction. At a minimum, the Contractor: shall have a spokesperson available for press interviews and public activities, develop news releases regarding the recycling program for the media, and prepare, print and distribute information sheets explaining the recycling program.

J. All recyclable materials placed out for collection shall be owned by, and are the responsibility of the occupants of the residential properties (residents), until they are collected by the Contractor. The recyclable materials become the property and responsibility of the Contractor upon the Contractor's acceptance and collection of said items.

K. If the Contractor determines that the recyclables set out by residents are unacceptable due to insufficient preparation of materials, it shall follow the rejection procedure described. In the event that improperly prepared materials are placed out for collection, the Contractor shall have the option to collect or leave the items, and in any case, shall leave a sticker or other form of notification approved by the City explaining the proper method of preparation of recyclable materials.

L. All approved recycling containers shall be placed within two feet of the blacktop or in the gutter if curb and gutter is present, and at a location that is readily accessible to the Contractor and its equipment, unless previous arrangements are made between the resident and the Contractor.

M. The contractor shall replace or repair all damaged containers provided by the contractor at no additional charge.

N. The Contractor shall utilize a facility and system for processing recyclable materials that is operated in such a manner to comply with all local, state and federal requirements.

O. Recyclable materials collected by the Contractor must be processed at an approved recyclables processing/materials recovery facility, which has all of the required permits, issued by the appropriate authorities. The Contractor must notify the City in writing of any processing facility utilized prior to use.

P. The Contractor has total responsibility of recyclables processing and marketing, and shall bear any and all costs incurred therewith, regardless of cause, including any residue that may occur during the process. The Contractor shall maintain accurate records, in a format as approved by the City, indicating the tonnage by type of the recyclables collected and delivered to the processing facility under this contract. The records shall be kept on a daily, weekly, cumulative monthly and cumulative annual basis, and shall be submitted to the City.

Q. The Contractor shall share a percentage of the profits on recyclables collected with the City of Alpine. The Contractor must indicate how the profit sharing will be done in this response to the RFP.

R. The Contractor shall be prohibited from disposing the recyclable materials collected at a landfill or other waste disposal facility without written permission of the City. Violation of this provision may be cause for penalty and/or termination.

## III. Other Services

In addition to residential solid waste collection and recycling services, the proposer shall provide the following additional collection services to the City: Christmas tree pickup.

### A. City Facilities

1. The Contractor shall provide the City with collection containers at each of the City facilities listed in EXHIBIT B.
2. The Contractor shall provide each of the City facilities with one (1) 6 yd container unless otherwise specified.
3. The City may add additional containers as needed during the term of the agreement.
4. The Contractor shall collect the solid waste from the City facilities at least once per week, and more often if necessary.
5. The Contractor shall collect recyclables from the City facilities as designated by the City.

### B. Special Events

1. The Contractor shall also provide solid waste collection at City events, including but not limited to the following: Alpine Days and other special City events designated by the City of Alpine.
2. Containers shall be moved to central locations for special events and shall be emptied several times (as much as necessary to prevent spilling or overflow) during the event.

## 4. GENERAL COLLECTION OPERATION:

A. The Contractor shall provide an adequate number of vehicles approved by the City for regular collection services. Vehicles and equipment shall be kept in good condition and repair, appearance, and in a sanitary condition at all times, properly inspected and meeting state and local requirements. Contractor will insure that all trucks used in the execution of the contract are in good operating condition, and comply with all of the applicable federal, state, and local requirements and shall not be older than five years. In addition, each vehicle shall state the name and telephone number of the contractor, in a clearly visible manner.

B. All solid waste hauled by the Contractor shall be contained or enclosed so that leaking, spilling or blowing of the material is prevented. In the event of any spillage by the Contractor, the Contractor shall immediately clean up the spill. Contractor shall immediately clean up any fluid leaks emanating from contractors collecting equipment, including but not limited to hydraulic fluids and oil.

C. The Contractor shall not litter premises in the process of making collections. The Contractor shall not be required to collect or clean up material that has not been placed in an approved garbage container or in a manner herein provided. Any fines or fees received for littering or vehicle infractions during the transportation from the City of Alpine to the transfer facility or landfill are the responsibility of the Contractor.

D. All residential solid waste collected shall be hauled by the Contractor to North Pointe Transfer Station in Lindon, Utah or other designated facility as agreed upon by the City of Alpine and Contractor. The Contractor shall become familiar with and abide by all rules, regulations, laws, contracts, provisions, holiday schedules, etc., related to the use of agreed upon disposal facilities.

E. The Contractor shall prepare and submit, for approval by the City, a collection schedule which shall ensure regular weekly trash and bi-weekly recycling collection service. Adequate equipment, forces and materials shall be made available by the Contractor to start work on the date ordered by the City and to comply with the collection schedule. The collection schedule shall show the days of the week on which collection will be made at each residential unit in the collection zone. All regular collection shall be made Monday through Friday. Adjustments may be made for holidays or emergency situations upon prior written concurrence of the City.

1. Maps and schedules of collection routes shall be provided to the City a minimum of 30 days prior to the initiation of collection operations or changes in operation.
2. Maps and schedules of collection routes shall show the day(s) for regularly scheduled pick-up for each route and area.
3. The City shall give prior written approval for all routes and schedules when established or changed prior to contract implementation.
4. Changes in regular collection routes or schedules shall not be made more often than once during any six month period without the written consent of the City.
5. The cost of customer notification for route changes will be paid by the Contractor if the route change is requested by the Contractor.
6. The route or schedule must provide for the collection of both sides for a street or road on the same day.

F. The following shall be holidays for purposes of this contract (there shall be no deviations from the established schedule, except for the noted holidays when the North Pointe Transfer Station or other designated facility is closed):

New Years Day
Memorial Day
Independence Day
Pioneer Day
Labor Day
Thanksgiving Day
Christmas Day

Contractor shall observe all the above-mentioned holidays by suspension of collection service on that holiday. The Contractor shall notify each and every residential unit in the City of the holiday collection schedule annually.

G. The Contractor shall not commence collection of refuse in residential areas prior to 7 a.m. or continue after 7 p.m. without approval of the City.

H. The Contractor may deal directly with business, commercial, industrial, and institutional establishments and non-complying residences and all sums collected by it from such establishments shall belong to the Contractor as its compensation and shall not be accounted for by it to the City. The City, however, does not, by this agreement, purport to grant to the Contractor the exclusive right to collect and dispose of such business, commercial, industrial, and institutional garbage, the same being a matter of negotiation and individual agreement with said contributors. In the event the Contractor shall handle such business, commercial, industrial, and institutional garbage, it shall be required to obtain a City of Alpine Business License and to comply with all applicable ordinances and regulations with respect to the hauling and disposal thereof. **Contractor agrees not to co-mingle any business, commercial, industrial, and institutional waste with that collected from residential users, municipal buildings, City parks and special pickups within the City, nor co-mingle any waste collected outside that is not billed by the City with those collected pursuant to this agreement.**

I. The Contractor shall keep records of wastes and recycling materials collected and furnish the City a report on a monthly basis.

J. The City shall pay all residential tipping fees to the North Pointe Transfer Station or other designated facility as agreed upon by the City of Alpine and Contractor.

K. The Contractor shall maintain a local telephone number or such other office facilities through which it can be contacted. It shall have a responsible person in charge from 8 a.m. to 5 p.m., Mountain Standard Time, on regular business days, Monday through Friday, and on Saturdays from 8 a.m. to 1 p.m. Such office shall be within 25 miles from the City. Contractor shall appoint one individual to be the contact person.

L. The Contractor shall maintain the capability to receive service complaints by telephone (in person) during all normal working hours as outlined above. The Contractor will respond to all messages on the telephone answering machine after normal business hours by the next business day. The Contractor shall furnish the City with after-hours telephone numbers for emergency response.

M. Response and Resolution: The Contractor shall resolve all complaints regarding services in a prompt, courteous and expeditious manner. Whenever the Contractor receives notification of locations which have not received scheduled services, the Contractor shall provide collection within 24 hours.

N. Documentation: The Contractor shall maintain a permanent log of all service complaints; said log shall specify the following items as a minimum:

1. The name, address and phone number of complainant
2. The date and time (hour) the complaint was received
3. The specific nature of the complaint
4. The date and time (hour) the complaint was responded to
5. The date and time the complaint was resolved
6. The manner in which the complaint was resolved.

The Contractor shall submit a current monthly summary of this log to the City, coincident with, and as a condition of processing monthly payment requests.

O. The Contractor shall conduct operations under this contract in compliance with all applicable laws; provided, however, that the specifications shall govern the obligations of the Contractor where there exists conflicting ordinances of the City on the subject. The Contractor shall obtain all licenses and permits and promptly pay all taxes required by governmental agencies.

P. The Contractor shall not discriminate against any person because of race, sex, age, creed, color, religion, or national origin.

Q. Title to all residential solid waste and recyclables that Contractor has agreed to accept shall pass to the Contractor when placed in Contractor's collection vehicle, is removed by Contractor from a container, or is removed by Contractor from the residential unit, whichever last occurs.

R. The standard for default in performance is one or more of the following: 1) failure to provide the services indicated for a period in excess of two consecutive scheduled working days, weather permitting; 2) bona fide complaints or missed services during a month numbering in excess of two (2) percent of the residential units. If the Contractor is found in default of performance, the City may take, at any time, any or all of the following actions or other actions permitted by law:

1. The Contractor may be given a specified probationary period during which deficiencies outlined in writing are to be resolved to the satisfaction of the City. During this probationary period, the city may withhold ten (10) percent of the payment due to the Contractor until deficiencies are resolved.

2. Employ such means, as the City may deem advisable and appropriate to continue work until the matter is resolved and the Contractor until deficiencies are resolved.

3. Deduct any and all expenses incurred by the City from any money then due or to become due the Contractor and, should the City's cost for continuing the operation exceed the amount due the Contractor, collect the amount due, either from the Contractor or Contractor's surety company or both and also to assert a lien on all assets of the Contractor.

4. At its option, take interim possession at fair market value of all the Contractor's equipment and facilities used in the performance of this contract in order to continue collection service.

5. During such period, the liability of the City to the Contractor for loss or damage to equipment and facilities so used shall be that of a bailee for hire, ordinary wear and tear being specifically exempt from such liability.

**5. COST PROPOSAL**

A. The City will consider a yearly cost of living increase or decrease. The yearly cost of living increase/decrease must be tied to fluctuations in the Consumer Price Index (CPI) published by the U.S. Department of Labor, Bureau of Labor Statistics, West Urban. The price provided will be held for the first year and the cost of living change would begin at the start of the second contract year and each year thereafter.

**6. PROOF OF INSURANCE**

The Contractor shall maintain, during the life of this contract, at his own expense, the following policies of insurance described herein.

A. Comprehensive general liability insurance in the amount of Five Million Dollars ($5,000,000) per occurrence with an aggregate of Ten Million ($10,000,000), combined single limit, including property damage and personal injury coverage, during the effective dates of this contract, or any renewal hereof, in order to protect and save the City against any and all claims for damage to person, persons, or property arising from the collection, transport, or delivery of rubbish, garbage, and recyclables. The noted limits must apply exclusively to the City of Alpine and shall not be shared with any other operations of the Contractor.

B. Comprehensive automobile liability insurance with respect to both personal injuries and property damage in the amount of Three Million Dollars ($3,000,000) per occurrence with an aggregate of Three Million ($3,000,000), combined single limit, during the effective dates of this contract, or any renewal hereof.

C. Worker's Compensation insurance, including Occupational Disease and Employer's Liability Insurance, sufficient to cover all employees in its employ during the term of this contract or any renewal thereof. Statutory amounts and coverage should be as required by Utah Worker's Compensation and Occupational Disease Laws.

D. All policies shall name the City of Alpine, its officers, agents, and employees as additional insured's. This coverage shall be reflected on the Certificates of Insurance.

E. All policies shall carry an endorsement to the effect that the insurance company will provide written notice by certified mail to the City of any modifications, alterations, or cancellation of any such policy or policies or terms thereof at least thirty (30) days prior to the effective date of the action described in the notice. If any of the required insurance coverage is cancelled or lapse, the City may at the City's discretion, obtain substitute coverage at reasonable rates. The City may deduct the cost of such coverage, plus 10% for administrative charges, from any monies that are owing to contractor.

F. The aforesaid policies of insurance, and any others which may be necessary to comply herewith, shall be maintained in amounts of coverage set forth above; shall be designed to protect City from all claims for damages, including wrongful death claims of any kind or nature whatsoever which may arise from the operation of the Contractor in the performance of this contract, whether such operations be controlled by the Contractor himself or by someone either directly or indirectly employed by him for the purpose of accomplishing the obligation incumbent upon the Contractor by the terms of the contract; and shall otherwise indemnify and hold said City harmless from all manner of claims and lawsuits; and shall provide at insurer's expense, all necessary legal aid, counsel, and representation.

G. All of the insurance policies herein mentioned shall be issued by an insurance company licensed and authorized to do business in the State of Utah and the City of Alpine. Insurance coverage must be obtained and properly endorsed before any operations of the Contractor are commenced with the City. Said policies shall remain in full force and effect until the expiration of the term of this contract or the completion of all duties to be performed hereunder by the Contractor, whichever shall occur later. The Contractor shall likewise deposit with the City's risk manager either the original policies of insurance mentioned or true copies thereof.

H. It shall be the responsibility of the Contractor, in obtaining the aforesaid insurance coverage, to obtain policies which shall protect the City from any and all claims whatsoever their nature, regardless of the derivation.

l. The agreement to be reached based on the bid shall, in all respects, be interpreted, construed, and governed by the laws of the State of Utah. Further, Contractor agrees to comply with any and all State and Federal laws and statutes that have or may have any connection or application herewith, including but not limited to, Worker's Compensation, Social Security, Unemployment Compensation, and prevailing wage laws.

**7. BONDING**

A. BONDING: The Contractor will be required to provide a Bid Bond or Certified Check, attached to this proposal in the amount of $10,000.00 made payable to the City of Alpine. The Bid Bond or Check of the accepted bidder shall be forfeited in the event said bidder fails or refuses to enter into a contract and/or fails to furnish the additional bonds required herein. Checks submitted in lieu of Bid Bonds from the unsuccessful bidders will be available for pick up.

B. PERFORMANCE BOND: The Contractor shall execute and deliver to the City a performance bond with a satisfactory corporate surety, conditioned upon the faithful performance of this contract. The performance bond could be issued two ways. The first is an annual bond that is automatically renewed. If this is chosen the amount must be fifty (50) percent of the annual contract. The second is a bond that is ten (10) percent of the total amount of the contract which shall be in force for the full term of the contract.

This contract shall not become effective until the bond has been delivered to the City and approved by the City Administrator. This contract shall be subject to termination by the City Administrator. This contract shall be subject to termination by the City at any time if said bond is canceled or the surety thereon relieved from liability for any reason. The term of such performance bond shall be the same as the term of the contract.

Premium for the bond described above shall be paid by the Contractor.

The surety on the bond shall be a duly authorized corporate surety company authorized to do business in this State.

C. POWER OF ATTORNEY: Attorney-in-fact that signs performance bonds or contract bonds shall file with each bond a certified and effectively dated copy of their power of attorney.

D. PENALTIES : For each and every nonperformance of the contract and requirements of the specifications, the sums designated below shall be deducted from the invoice that is supplied by the Contractor under the provisions of the contract:

a) Failure to timely clean up spilled municipal waste or recyclables and replace receptacles, the sum of One Hundred Dollars ($100.00) for each offense will be paid to the City.

b) Failure or neglect to clear and resolve collection complaints (where containers have been placed for collection prior to 7 a.m.) within the next scheduled working day is:

One Hundred Dollars ($100.00) for each occurrence (every missed location is an occurrence). However, in the event that a collection complaint (i.e., skipped trash or recycling collection) is repeated at the same address three or more times within any 12-month period, the City may immediately impose a fine of One Hundred Dollars ($100.00) for the third and subsequent complaints without allowing the Contractor the opportunity to avoid the fine by correcting the complaint within the next scheduled working day.

c) Should the number of verified missed services per day exceed two (2) percent of the residential units during any month, a penalty equal to $10 times the number of missed services shall be deducted from the Contractor's billing.

d) On the second notice of any verified uncorrected complaint, the City may, at its option, remedy the complaint and assess $50.00 liquidated damages, to be deducted from that month's billing. The Contractor and City recognize that the City will suffer damage if Contractor fails to comply with the aforesaid provisions, that such damages would be difficult to ascertain, and that the aforesaid sum is a reasonable and agreed estimate of City's actual damages for each such failure of Contractor.

e) Changing the day of collection without notifying the affected premises or the City is One Hundred Dollars ($100.00) for each occurrence.

f) Starting route collection before 7 a.m. is Five Hundred Dollars ($500.00) for each occurrence.

g) Failure to remove all municipal waste and recyclables by 7 p.m. without approval of the City - One Hundred Dollars ($100.00) per occasion.

h) The Contractor will not be subject to deductions for non-performance in the event of hurricane, flood, riot, or other disaster which might cause abnormal or additional debris.

i) The Contractor agrees to prohibit any employee from working while under the influence of alcohol, drugs or otherwise impaired and to prohibit drinking of alcoholic beverages by Contractor's drivers and crew members while on duty or in the course of performing their duties under this contract.

j) Contractor's employees shall be required to wear a clean uniform bearing the Contractor's name. Employees who normally and regularly come into direct contact with the public shall bear some means of individual identification such as a name tag or identification card.

k) Employees driving the Contractor's vehicles shall at all time possess and carry a valid commercial driver's license issued by the State of Utah having a class required to operate the collection vehicle being operated.

l) Contractor's employees, officers, agents and sub-contractors shall, at no time, be allowed to identify themselves or in any way represent themselves as being employees or agents of the City.

m) Failure to implement disciplinary action toward any employee requested by the City manager or designee due to one or more of the following offenses during working hours will result in a penalty of One Hundred Dollars ($100.00):

1) Intoxication
2) Use of loud, profane, vulgar, or obscene language
3) Soliciting gratuities from the public for services
4) Refusal to collect or handle refuse as herein required
5) Wanton or malicious damage of containers or receptacles
6) Wanton or malicious scattering or spilling of refuse
7) Any other willful disregard of safety or sanitary requirements
8) Any act constituting a public nuisance or disorderly conduct

**8. COMMENCEMENT OF WORK:**

The successful proposer shall be prepared to commence services on July 1, 2013

**EXHIBIT A – MAP OF MUNICIPALITY COLLECTION AREAS**

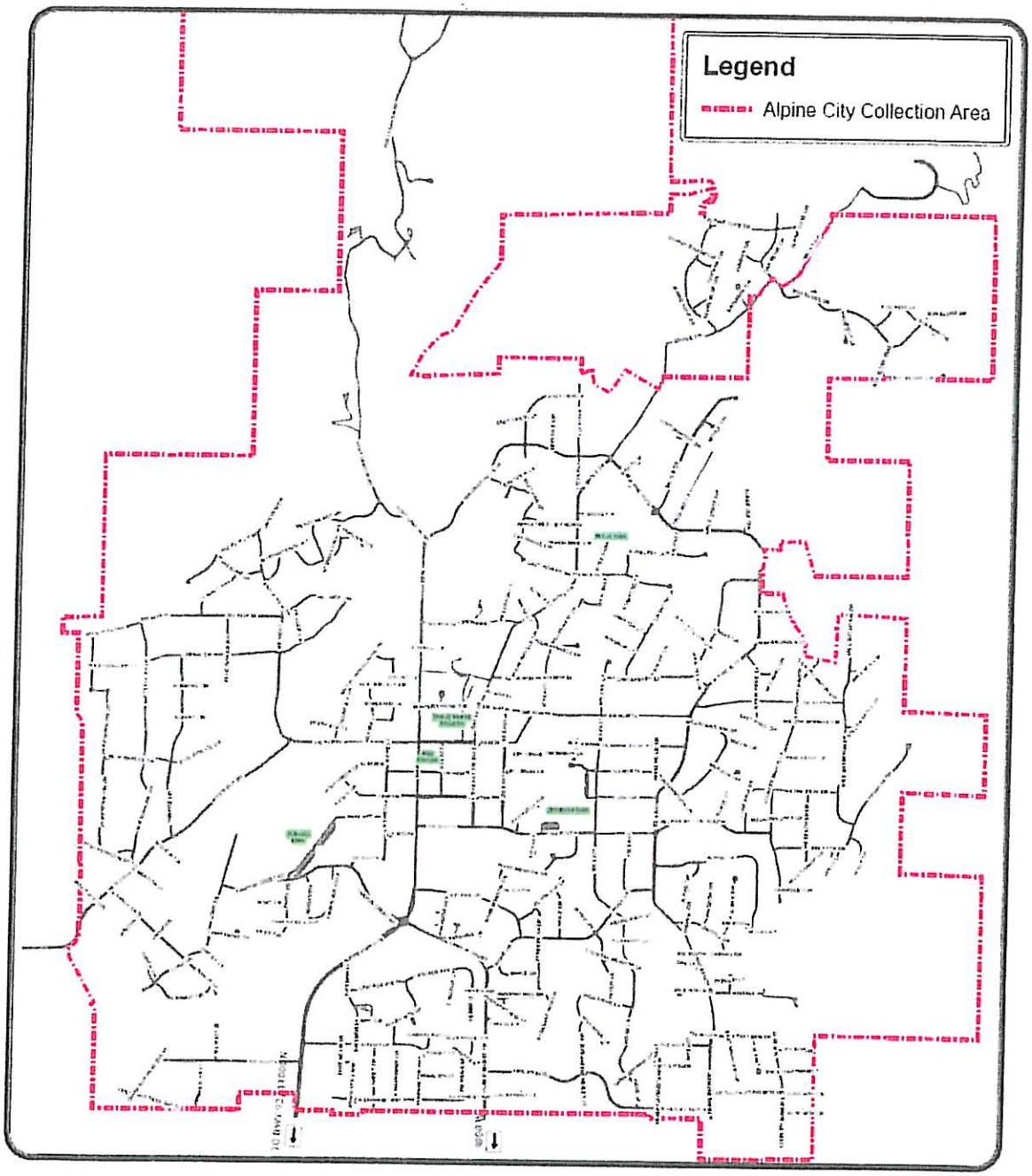


Exhibit A

Map of Municipality Collection Area

0 0.125 0.25 0.5 0.75 1 Miles

N

**EXHIBIT B – CITY PROPERTIES**

| Site | Address | # of Containers and Type | Service Schedule |
|---|---|---|---|
| Public Works Building | 181 E. 200 N. | 1 – 6 Yard | 1 X / Week |
| Creekside Park | 531 E. 100 S. | 1 – 6 Yard | 2 X / Week Apr-Oct<br>1 X / Week Nov-Mar |
| Burgess Park | 151 S. Parkway | 2 – 6 Yard | 2 X / Week Apr-Oct<br>1 X / Week Nov-Mar |
| Moyle Park | 601 E. 770 N. | 1 – 4 Yard | 1 X / Week |
| Fire Station | 50 E. 100 N. | 1 – 6 Yard | 1 X / Week |

Will Jones pointed out that the community did get some benefit from private open space because it reduced the use on public open space including the tennis courts. Also, the private open space stayed on the tax rolls and the City received tax revenue from it.

Troy Stout said he felt the proposed indoor tennis court would be an eyesore for neighbors outside the subdivision who had to look at it.

Ryan Nield said the indoor court would not be a plastic bubble. It would have the same architecture as the homes in the PRD and be built with stone and timbers. Part of the wall would be built into the hillside and there would be a lot of shrubs.

This item was for information only and no action was taken.

**F. Waste Disposal Contract:** Rich Nelson said the current contract with ACE would expire soon and the City had advertised for Request For Proposals (RFP). Three companies responded which were ACE, Waste Management, and Republic (previously BFI). Mr. Nelson said Mayor Willoughby and Councilman Mel Clement were present at the bid opening. After reviewing the bid sheets, staff recommended that they award the contract to ACE Disposal. Some of the factors in selecting ACE were: 1) they had the lowest rate for the first trash can; 2) their landfill rate that was significantly lower; 3) there was no fuel surcharge; 4) they offered two free shred days where citizens could bring their personal stuff to shred; 5) they offered a free e-recycling day. ACE's recycling rate for the first and additional cans was slightly higher but staff felt that was offset by the other benefits.

Mr. Nelson said ACE was also offering green waste recycling and he felt they should seriously consider it. They required at least 30% participation for neighborhood green waste pickup. Mr. Nelson also suggested the Council consider an opt-out program for regular recycling rather than opt-in. Currently about half the residents participated in recycling. He said ACE offered profit sharing as well. Once they hit their basic value, they shared the profit.

Mayor Willoughby said ACE came out lower on landfill costs because they were not tied to the Northpoint landfill.

Bradley Reneer said the landfill in Fairfield seems like a long way to go. Rich Nelson said that in the landfill business they had to make it successful and do what they had to do to attract customers.

Mayor Willoughby asked about hazardous waste disposal. Rich Nelson said the Health Department would continue to handle that. Mayor Willoughby noted that the citizens had been happy with the service ACE provided.

**MOTION:** Will Jones moved to award the Waste Collection Contract to ACE Disposal. Bradley Reneer seconded. Ayes: 3 Nays: 0. Motion passed unanimously.

Rich Nelson said he would run the numbers for green waste collection and come back with the information.

**G. Ordinance No. 2013-03 Appeal Authority:** Rich Nelson said that for a long time, the applications coming before the Board of Adjustment had become more and more technical. In addition, the state law for approving variances had become more complicated. Because of that, they were looking at appointing a Hearing Officer with legal expertise to act as the Appeal Authority rather than the Board of Adjustment. He said most cities had gone to having a hearing officer.

David Church said that at one time the Board of Adjustment heard only variances. Under the new state law, cities were required to have an in-house appeal authority to hear appeals to land use decisions and interpretations of the ordinances. The appeal authority would also hear cases where an applicant said the city had made a mistake in approving a permit. Those appeals had been handled by the Board of Adjustment but because of the complexity of the issues, the City had to hire an attorney to assist and advise the Board of Adjustment. At times they'd had three-party appeals, each with their own legal counsel, which further complicated the process. One of the solutions that cities had been using was to assign the appeal to an administrative law judge or hearing officer. Highland City had been doing that for ten or fifteen years. Mr. Church said it had been his recommendation for some time that Alpine appoint a hearing officer to deal with everything but the variances. It should not cost them much more than it did now since the City had to hire an attorney for the last few appeal cases to advise the Board of Adjustment. In

# ALPINE CITY COUNCIL AGENDA

**SUBJECT: Glass Recycling Proposal**

**FOR CONSIDERATION ON: 25 May 2021**

**PETITIONER: Councilman Greg Gordon**

**ACTION REQUESTED BY PETITIONER: Review the proposal from Momentum Recycling for glass recycling.**

**BACKGROUND INFORMATION:**

Councilman Greg Gordon has been working with Momentum Recycling on a proposal for glass recycling. Jason Utgaard, who is the general manager of the company is planning to attend the city council meeting to share a brief presentation on the program. It is our understanding that the City would purchase the container for a one time $700 fee and the container would be placed near the cardboard recycling containers at Alpine Elementary. Momentum Recycling would pickup the glass one time a month (2x if needed) at a reduced pickup fee of $80 per time.

**STAFF RECOMMENDATION:**

**SAMPLE MOTION TO APPROVE:**
I move to approve the glass recycling proposal from Momentum Recycling.

# ALPINE CITY COUNCIL AGENDA

**SUBJECT: Public Right-of-Way License to Encroach – 968 Quail Ridge Circle**

**FOR CONSIDERATION ON: 25 May 2021**

**PETITIONER: R. Darren ahd Shae Lee, Residents of Alpine City**

**ACTION REQUESTED BY PETITIONER: Approve an agreement and license to encroach upon a public right-of-way.**

**BACKGROUND INFORMATION:**

Mr. and Mrs. Lee of 968 Quail Ridge Circle, residents of Alpine, are seeking to replace an old fence that was within the public right-of-way on Quail Hollow Drive. The fence to be replaced was located approximately 6 feet from back of curb. The new proposed fence would be setback slightly further at 7 feet from back of curb. Public right-of-way extends 10 feet from back of curb; thus, the new fence would encroach upon public right-of-way.

The proposed location of the fence is based on preserving trees and other mature vegetation located along the east side of the property. There is no sidewalk on the west side of Quail Hollow Drive, as an agreement was reached between the City and developer of Old Moyle Mound Subdivision (Lon Nield), that the developer would provide funds to build sidewalk from the North Stake Center to Orchard Lane and in exchange the west side of Quail Hollow Drive would not be required to have sidewalk.

On May 11, 2021, the petitioner (Lee Family) and developer (Lon Nield) came to City Council and spoke about their proposal during the public comment portion of the meeting. The City Council showed interest in trying to work out a solution with the petitioner. Sataff have prepared an agreement and license to encroach upon public righ-of-way that would allow the petitioner to do what they are proposing and would provide terms of an agreement by which the City would maintain ultimate control of the public right-of-way.

Staff recommends approval of the proposed agreement.

**STAFF RECOMMENDATION:**
Approve the agreement and license to encroach upon public right-of-way.

**SAMPLE MOTION TO APPROVE:**
I move to approve the agreement as proposed.

**SAMPLE MOTION TO TABLE/DENY:**
I move table/deny the proposed agreement based on the following:

- ***Insert Finding***

May 12, 2021

To: Alpine City

Per our public comment meeting with the Alpine City Council on Tuesday, May 11, 2021, we are seeking an approval to replace a fence on our property. The property is located at 968 Quail Ridge, Alpine UT and is part of the "Old Moyle Mound HOA". The property borders both Quail Ridge and Quail Hollow Lane (it is on the Southwest corner of these streets).

For many years, the property has had an open wrought iron fence running parallel to Quail Hollow Lane and the original fence was approximately set back 6 feet from the curb of the street. We propose to replace this fence, with identical materials (i.e. wrought iron) and move the fence to be approximately 7 feet back from the curb.

It is our understanding that the city of Alpine requires we seek approval for this change, and we are thus providing required information to formalize our request.

As background, Lon Nield was the original developer of this property and as part of the development, there was no sidewalk provided on the west side of Quail Hollow Lane from Qual Ridge to Quail Hollow circle. The city of Alpine agreed to eliminate the requirement for a sidewalk in exchange for the developer (Lon Nield) providing funds to build a sidewalk from the Alpine North Stake Center to Orchard Lane.

We are proposing to move and replace this fence approximately 7 feet back from Quail Hollow Lane. This setback permits us to keep the large grove of oak trees that have been on the lot for many years. Should we move the fence line to a 10-foot setback, we will be forced to remove many mature trees that will harm the lot and reduce the overall appeal for the neighborhood generally.

We are happy to meet to further discuss the proposal and identify what needs the city has for us to have our proposal considered. To assist in the city's research, we have included below a plat plan showing the approximate location of the proposed fence and we have included a letter of understanding between ourselves and the "Old Moyle Round" HOA.

Please let us know what further information you may require.

Sincerely,

R. Darren & Shae Lee

◂ Dropbox 8:18 PM Tue May 11 100%
Done TakeOff 24x36 PDF

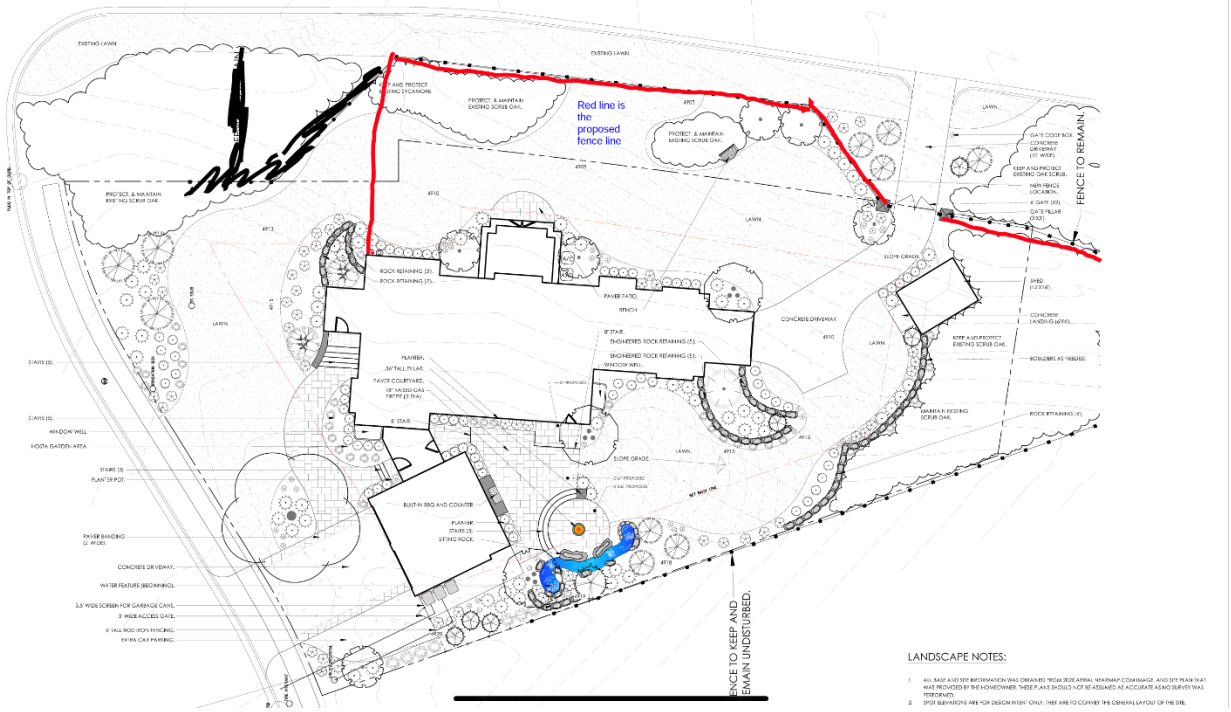

May 11, 2021

To: Alpine City

The members of the Old Moyle Round HOA (located at Quail Ridge in Alpine, UT) do hereby grant to the owners and residents of 968 Quail Ridge (R. Darren and Shae Lee) the following:

1) Right of easement through HOA land located at the southeast corner of the 968 Quail Ridge lot. This easement is granted for the purposes of having a driveway connect the lot to Quail Hollow Road
2) Permission to move the HOA installed fence on the east side of the lot (parallel to Quail Hollow Road) to the east. This is granted to enable preservation and maintenance of the HOA land that borders the east side of the 968 Quail Ridge lot. It is understood that the owners (R. Darren and Shae Lee) shall pay for the cost of the fence relocation and maintain the HOA land at the expense of the owners.

Signed,

Gerald Lund, President

Annette Flygare, Secretary

R. Darren & Shae Lee, Owners (968 Quail Ridge)

**AGREEMENT AND LICENSE TO ENCROACH**

**UPON A PUBLIC RIGHT-OF-WAY**

THIS AGREEMENT entered into this _____ day of _____ 20____, between Alpine City, a municipal corporation and politic of the State of Utah ("CITY"), and _____, ("LICENSEE") LICENSEE may be jointly referred to as the "Parties."

WHEREAS, CITY is the owner of property at _____ which is part of the right-of-way located Alpine City, Utah, more particularly described as follows:

_____

_____

_____

_____

WHEREAS, LICENSEE wishes to replace an existing fence located in the right-of-way with a new fence in such a location that will protect old and established trees and other plants and shrubbery to be located approximately seven feet ('7') from back of curb under the terms and conditions set forth herein;

WHEREAS, CITY agrees to allow for such an encroachment, subject to the terms of this Agreement.

NOW, THEREFORE, in consideration of the covenants, terms, and conditions herein, the parties agree as follows:

1. LICENSEE acknowledges that Address of Property)_____ _____ is CITY owned property adjacent to (Name of Street)_____ a roadway owned and maintained by CITY.

2. CITY hereby grants to LICENSEE, a revocable license to encroach upon the property of for the purpose of installing a _____fence approximately seven feet (7') from the back of curb at a location along _____ (street) at approximately _____ (west/east, etc.) thereon in accordance with plans and specifications to be approved in writing by City's Public Works Department. The initial term of the license is ten (10) years, subject to renewal on similar terms and conditions for like term. Said fence shall be constructed in a manner and installed in a location as set forth in Exhibit A attached hereto.

3. Satisfactory maintenance of said fence shall be the sole responsibility of LICENSEE, at its expense and LICENSEE shall not expand, enlarge or change the location thereof in any way without written permission from CITY.

4. CITY specifically reserves the right to revoke the license granted LICENSEE herein after the initial term upon 180 days' notice. Said right of revocation may be exercised by CITY in its absolute discretion for any reason whatever. LICENSEE agrees that the CITY may exercise said right of revocation, notwithstanding the fact that LICENSEE may have expended money and labor to construct and maintain said gateway sign authorized pursuant to the license granted herein.

5. In the event CITY invokes its right of revocation, said revocation shall become effective one hundred eighty (180) days after written notification of revocation is mailed to LICENSEE. Within said one hundred eighty (180) day period LICENSEE shall, at his/her own expense, remove said fence from _____ and restore said

property to the original condition of said property  If LICENSEE fails to remove the fence within such time, CITY may remove it and all reasonable costs incurred by CITY in doing so shall be paid by LICENSEE.

6. LICENSEE agrees to indemnify and hold CITY harmless from any and all claims for injury, death, loss or damages arising from the installation, removal, or maintenance of the gateway sign by LICENSEE in interest pursuant to the license granted hereunder.

7. The license granted LICENSEE herein shall be permitted to extend to heirs, assignees, or successors in interest of LICENSEE, under the same terms and conditions set forth herein.

8. NOTICE. Any notice required or permitted to be given hereunder shall be deemed sufficient if given by a communication in writing, and shall be deemed to have been received (a) upon personal delivery or actual receipt thereof, or (b) within three days after such notice is deposited in the United States mail, postage pre-paid, and certified and addressed as follows:

If to CITY: Alpine City
20 North Main Street
Alpine, Utah 84004

If to LICENSSEE _____
_____
_____

I

It is written agreement constitutes the entire agreement between the parties and may be amended only by written agreement properly executed by the parties. No verbal instructions, understandings, etc., nor letters or documents signed by one of the parties shall be permitted to operate as an amendment to this agreement.

IN WITNESS WHEREOF, the parties have executed this Agreement and License on the date first above written.

Alpine City

By _____
CITY MAYOR OR DESIGNEE

APPROVED AS TO FORM:

By: _____
City Attorney

Print:_____

Date: _____

LICENSEE:

Name:_____

Signature: _____

Address: _____

Date: _____

Exhibit A
Property Description and Plans

# ALPINE CITY COUNCIL AGENDA

**SUBJECT:** **Request to waive the right to enforce the Willow Canyon Annexation Agreement Height Restriction**

**FOR CONSIDERATION ON:** **May 25, 2021**

**PETITIONER:** **Casey Cloward representing the Carroll Family**

**ACTION REQUESTED BY PETITIONER:** **The City waive its right to enforce the height restriction.**

**BACKGROUND INFORMATION:**

The petitioner is seeking to build a home on Lot 30 of the Willow Canyon Subdivision Phase 2B. The property is located at 175 North Bald Mountain Drive. Plans show the proposed home with a height of 33 feet 6 inches above the natural grade. The Willow Canyon Annexation Agreement states that:

> *No home may be built on lots above the High Bench Ditch that exceeds a height of 25 feet above the natural grade to the highest point of the roof or parapet.*

The Restrictive Covenants and Conditions of Willow Canyon Subdivision also state that:

> *East of the High Bench Ditch no building shall be allowed to exceed a height of 25 feet above the natural grade unless approved by both the Alpine City Council and the Architectural Committee.*

The proposed home is 8 feet 6 inches above the height restriction set forth in the Annexation Agreement, and the greatest height exception that the City Council has ever granted was 14 feet 2 inches for the Wittenberg home in 2019.

In a letter dated May 11, 2021, the Willow Canyon Architectural Design Committee states their support for the height exception as proposed by the applicant.

> *The specifics of that variance is that the Top Back of Curb at a mid-point of the home is 5190 feet in elevation and the Top of Foundation of the home at the East side of the home at mid-point is 5182.5 feet in elevation. This results in* ***a relative difference between those two points being 7.5 feet.***

**SAMPLE MOTION TO APPROVE**

I move that the City waive its right to enforce the height restriction found in the Willow Canyon Annexation Agreement so long as the height does not exceed 8 feet 6 inches above the 25-foot height limitation.

**SAMPLE MOTION TO DENY**

I move to deny the proposal based on the following:

- ***Insert Finding***





THESE PLANS AND DOCUMENTS ARE THE PROPERTY OF DRIFTWOOD HOME DESIGN, AND ANY REUSE OR FURTHER DISTRIBUTION THEREOF IN PART OR IN WHOLE WITHOUT THE WRITTEN PERMISSION OF DRIFTWOOD HOME DESIGN IS PROHIBITED. © COPYRIGHT DRIFTWOOD HOME DESIGN - DESIGNER IS NOT AN ARCHITECT OR ENGINEER. PLANS ARE INCOMPLETE WITHOUT ATTACHED ENGINEERING SPECS. VERIFY ALL DIMENSIONS, CONDITIONS, AND MEASUREMENTS ON SITE PRIOR TO CONSTRUCTION.



RENDERINGS ARE FOR PERSPECTIVE VISUAL REPRESENTATION ONLY, ALL SPECIFIC MATERIALS AND COLORS TO BE PRESENTED TO ARCHITECTURAL REVIEW AND ALLOWED ONLY UPON APPROVAL. LANDSCAPING PLAN TO BE PROVIDED BY OTHERS.

# CARROLL RESIDENCE

## LOT 30, WILLOW CANYON SUBDIVISION

## ALPINE, UTAH



## SHEET INDEX


| | |
|---|---|
| A0.1 | COVER PAGE |
| C1 | SITE PLAN |
| A0.3 | GENERAL NOTES |
| A1.1 | FRONT & REAR ELEVATION |
| A1.2 | RIGHT & LEFT ELEVATION |
| A2.1 | BASEMENT FLOOR PLAN |
| A2.2 | MAIN FLOOR PLAN |
| A2.3 | SECOND FLOOR PLAN |
| A3.1 | ROOF DRAINAGE |
| A4.1 | BUILDING SECTIONS |
| A4.2 | SECTION DETAILS |
| E1.1 | BASEMENT ELECTRICAL |
| E1.2 | MAIN FLOOR ELECTRICAL |
| E1.3 | SECOND FLOOR ELECTRICAL |
| S1.1 | FOOTING AND FOUNDATION |
| S1.2 | MAIN FLOOR FRAMING |
| S1.3 | SECOND FLOOR FRAMING |
| S1.4 | ROOF FRAMING |
| SN.1 | STRUCTURAL NOTES |
| SD.1 | STRUCTURAL DETAILS |
| SD.2 | STRUCTURAL DETAILS |
| SD.3 | STRUCTURAL DETAILS |
| SD.4 | STRUCTURAL DETAILS |
| SD.5 | STRUCTURAL DETAILS |
| | |


NOTES:

- APPLICANT IS RESPONSIBLE FOR CONTACTING AND RECIEVING APPROVAL FROM APPROPRIATE FIRE DISTRICT, WATER DISTRICT, SEWER DISTRICT AND HEALTH DEPARTMENT
- GAS PIPING PLAN AND CITY/COUNTY GAS LINE INSTALLATION FORM AND PIPING DIAGRAM SHALL BE ON SITE FOR GAS LINE AND METER INSPECTION
- A THIRD-PARTY INPECTOR SHALL INSPECT THE AIR LEAKAGE OF CONSTRUCTED BUILDING TO COMPLY WITH N1102.4.1.2
- GOVERNING CODES 2015 IRC FOR ARCHITECTURAL AND 2018 IBC FOR STRUCTURAL

BUILDER: RAYKON CONSTRUCTION - 801.691.8957

STRUCTURAL ENGINEERING: DUV ENGINEERING - 801-376-9369

CIVIL ENGINEERING: KEN BERG CIVIL ENGINEERING - 801.492.1277

## SQUARE FOOTAGE

MAIN FLOOR
- LIVING 4170 SQ. FT.
- GARAGE 1475 SQ. FT.

SECOND FLOOR
- LIVING 997 SQ. FT.

BASEMENT
- LIVING 5229 SQ. FT.

TOTAL
- LIVING 10,396 SQ. FT

REVISIONS

DRIFTWOOD HOME DESIGN
PH. 801-857-9633 | WWW.DRIFTWOODPLANS.COM

DESIGNED FOR:
CARROLL RESIDENCE
WILLOW CANYON SUBDIVISION, PLAT2B, LOT 30, ALPINE, UTAH

DATE: 3-1-2021
SCALE: AS NOTED
DRAWN BY: JAC
FILE NAME: 20-031

COVER PAGE
A0.1

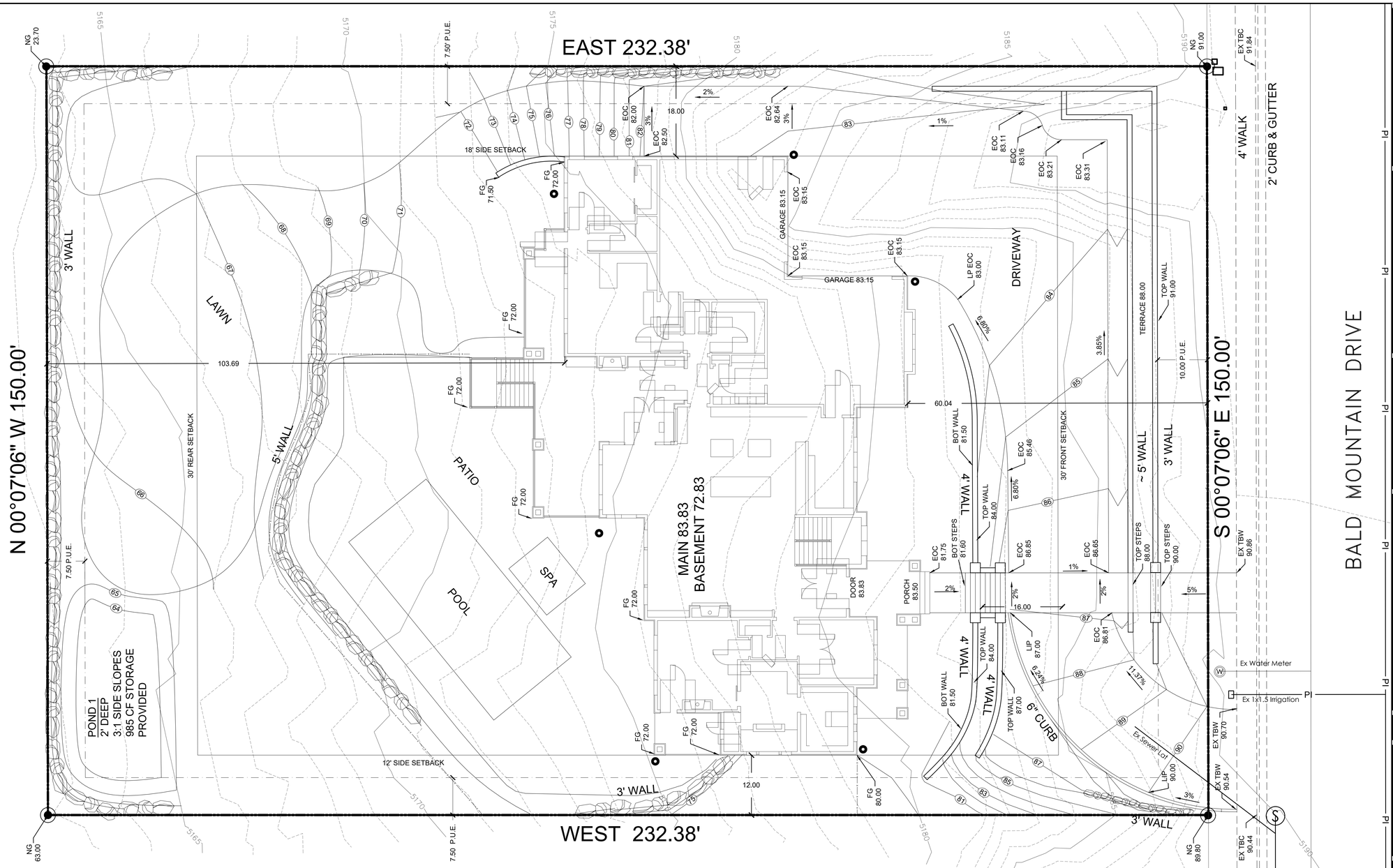


NOTES:

1. PLANS MUST COMPLY WITH THE 2015 IRC AND 2014 NEC.
2. RETAINING WALLS OR ACCESSORY STRUCTURES PROPOSED WITHIN A PUBLIC UTILITY EASEMENT WILL REQUIRE WRITTEN APPROVAL OF ALL AFFECTED ENTITIES.
3. ALL RETAINING WALLS OVER 4 FEET IN HEIGHT FROM THE FOOTING TO THE TOP OF WALL SHALL BE DESIGNED BY A PROFESSIONAL ENGINEER LICENSED IN THE STATE OF UTAH, AND BE DESIGNED IN ACCORDANCE WITH ARTICLE 3.32 OF THE ALPINE CITY DEVELOPMENT CODE. A SEPARATE BUILDING PERMIT AND PEER REVIEW WILL BE REQUIRED.
4. FENCES ARE REQUIRED TO GET A SEPARATE BUILDING PERMIT. UNDER NO CONDITION SHALL A PRIVACY FENCE AND RETAINING WALL EXCEED NINE (9) FEET ON THE SAME PLANE. IF A PRIVACY FENCE THAT IS ON TOP OF A RETAINING WALL WOULD EXCEED NINE (9) FEET, THE FENCE SHALL BE SET BACK AT LEAST FOUR (4) FEET FROM THE BACK SIDE OF THE RETAINING WALL. OPEN STYLE FENCES INCLUDING BUT NO LIMITED TO RAIL FENCES, FIELD FENCES, OR CHAIN LINK FENCES ARE PERMITTED TO BE ON THE SAME PLANE AS A RETAINING WALL. (SECTION 3.21.6)

DEVELOPMENT

*LOT 30*
*WILLOW CANYON*
*PHASE 2B*
*175 N. BALD MOUNTAIN DR*
*ALPINE, UT 84004*
*PARCEL #*
*55:414:0030*

TABULATIONS

FINISHED SQUARE FOOTAGE

| | |
|---|---|
| BASEMENT - | xxxx sqft |
| MAIN- | xxxx sqft |
| UPPER- | xxxx sqft |
| TOTAL- | xxxx sqft |
| GARAGE- | xxxx sqft |

HEIGHT TABLE

| | | |
|---|---|---|
| RIDGE LINE ELEVATION | = | xxxx |
| AVERAGE FINISH GRADE ELEVATION (83.15+83.15+72+72+72+80)/6= | | 77.05 |
| TOTAL HEIGHT OF HOME | = | xxxx |
| ALLOWED TOTAL HEIGHT | = | xxxx |

0 5 10 20 30
SCALE: 1"= 10'


berg
CIVIL ENGINEERING
11038 N Highland Blvd Suite 400
Highland Ut, 84003
office (801) 492-1277
cell (801) 616-1677


REVISIONS

| NO. | DATE | DESCRIPTION |
|---|---|---|
| 1 | | |
| 2 | | |
| 3 | | |
| 4 | | |
| 5 | | |
| 6 | | |
| 7 | | |

SEAL

STATE OF UTAH
R. BERG
REGISTERED
02/19/2021
343602
PROFESSIONAL ENGINEER

| ACTION | DATE |
|---|---|
| SITE | 02/19/2021 |

PROJECT

*CARROLL*
*RESIDENCE*

DESCRIPTION

*SITE PLAN*

| SHEET NAME | SHEET NUMBER |
|---|---|
| *SITE* | *C1* |

I:\My Drive\Berg Civil\2021\Alpine\Carroll\CARROLL SITE.dwg

THESE PLANS AND DOCUMENTS ARE THE PROPERTY OF DRIFTWOOD HOME DESIGN - DESIGNER IS NOT AN ARCHITECT OR ENGINEER. PLANS ARE INCOMPLETE WITHOUT ATTACHED ENGINEERING SPECS. VERIFY ALL DIMENSIONS, CONDITIONS, AND MEASUREMENTS ON SITE PRIOR TO CONSTRUCTION. © COPYRIGHT DRIFTWOOD HOME DESIGN IS PROHIBITED. THESE PLANS AND DOCUMENTS MAY NOT BE REPRODUCED, ALTERED OR COPIED IN ANY FORM OR MANNER WHATSOEVER NOR ASSIGNED TO ANY THIRD PARTY WITHOUT FIRST OBTAINING THE WRITTEN PERMISSION OF DRIFTWOOD HOME DESIGN. IN THE EVENT OF UNAUTHORIZED REUSE OF THESE PLANS AND DOCUMENTS BY THE OWNER OR ANY THIRD PARTY, THE OWNER AND THIRD PARTY AGREE TO HOLD DRIFTWOOD HOME DESIGN HARMLESS AND TO INDEMNIFY DRIFTWOOD HOME DESIGN FOR ANY DAMAGES RESULTING FROM SUCH REUSE. THE OWNER AND THIRD PARTY ALSO AGREE TO PAY ALL COSTS AND ATTORNEY FEES INCURRED BY DRIFTWOOD HOME DESIGN IN ENFORCING THESE RESTRICTIONS.

## FLOOR PLANS

1. ALL DIMENSIONS ON SITE SHALL BE VERIFIED BY GENERAL AND SUB CONTRACTORS. REPORT ANY DISCREPANCIES TO DESIGNER PRIOR TO CONSTRUCTION.
2. ALL WORK SHALL BE IN STRICT ACCORDANCE WITH THE LATEST EDITION OF THE INTERNATIONAL RESIDENTIAL CODE AND LOCAL ORDINANCES.
3. ALL EXTERIOR AND INTERIOR WALLS ARE DRAWN AND DIMENSIONED TO FINISHED WALLS AND ARE SHOWN AT 6 1/2" AND 4 1/2" RESPECTIVELY (UNLESS OTHERWISE NOTED).
4. BRICK AND STONE ARE DIMENSIONED AT 4" AND CULTURED/THIN CUT STONE ARE DIMENSIONED AT 2" (TO BE VERIFIED WITH MANUFACTURER).
5. FIRE SEPARATION BETWEEN HOUSE AND GARAGE:
   - A. THE GARAGE SHALL BE SEPARATED FROM THE RESIDENCE AND ITS ATTIC AREA BY NOT LESS THAN 1/2" GYPSUM BOARD APPLIED TO THE GARAGE SIDE. GARAGES BENEATH HABITABLE ROOMS SHALL BE SEPARATED FROM ALL HABITABLE SPACES ABOVE BY NOT LESS THAN 5/8" TYPE 'X' GYPSUM BOARD. WHERE THE SEPARATION IS A FLOOR/CEILING ASSEMBLY, THE STRUCTURE SUPPORTING THE SEPARATION SHALL ALSO BE PROTECTED BY NOT LESS THAN 1/2" GYPSUM BOARD IRC R302.6
   - B. ANY DOOR BETWEEN THE HOUSE AND GARAGE SHALL BE A TIGHT FITTING, SOLID WOOD OR HOLLOW METAL DOOR, 1-3/8" THICK OR A 20 MINUTE LABELED WITH CLOSER - SEE THE 2018 IRC R302.5.1
   - C. DUCT PENETRATIONS SHALL BE BY MINIMUM 26 GAUGE SHEET METAL, NO OPENINGS INTO THE GARAGE ARE PERMITTED. IRC 302.5.2
   - D. NO ROOMS USED FOR SLEEPING WILL HAVE DIRECT ACCESS FROM GARAGE.
6. ALL STYLES AND TYPES OF INTERIOR FINISHES (I.E. DOORS, HARDWARE, WINDOWS, PAINT, FLOOR COVERINGS, APPLIANCES, ETC.) SHALL BE DETERMINED BY OWNER OR CONTRACTOR AS NEEDED.

## ELEVATIONS

1. SEE ELEVATIONS NOTED AND DIMENSIONED FOR WALL HEIGHTS AND FLOOR PLACEMENT.
2. GENERAL CONTRACTOR IS RESPONSIBLE FOR ALL SITE WORK (I.E. EXCAVATION, BACKFILL, GRADE, COMPACTING, ETC.) ALL WORK MUST BE IAW LATEST EDITION OF INTERNATIONAL RESIDENTIAL CODE AND ALL LOCAL CODES.
3. PROVIDE METAL FLASHING OR 15 LB FELT BETWEEN WOOD EXTERIOR WALL AND CONCRETE SLABS, PORCH CAPS, DECKS, ETC.
4. PROVIDE ALL EXTERIOR OPENINGS WITH FLASHING, COUNTER FLASHING AND CAULKING WITH THE PROPER TYPE OF SEALANT. SEALING AND INSTALLATION OF WINDOWS MUST BE IAW MANUFACTURER'S INSTRUCTIONS (SEE IRC SEC R703.4 AND R613.1)
5. INSPECTIONS BY BUILDING INSPECTOR AS DEEMED NECESSARY IAW IRC SEC R109.1
6. ALL WOOD, HARDBOARD OR STRUCTURAL PANEL SIDING SHALL COMPLY WITH IAW IRC SEC. R703.1. DETAILS TO BE PROVIDED BY OWNER OR CONTRACTOR.
7. ROOF VENTILATION AND ICE BARRIER DETAIL SEE GENERAL NOTES ON SHEET A -6.

## ROOM DIMENSIONS, ETC.

1. CEILING HEIGHTS OF ALL HABITABLE ROOMS (HALLWAYS, BATHROOMS, TOILET ROOMS, LAUNDRY ROOMS, AND PORTIONS OF BASEMENTS CONTAINING THESE SPACES SHALL HAVE A CEILING HEIGHT OF NOT LESS THAN 7 FEET. IRC 305.1 - SEE SAME SECTION FOR EXCEPTIONS.
2. HABITABLE ROOMS SHALL HAVE A FLOOR AREA OF NOT LESS THAN 70 SQ.FT. NO PORTION OF A ROOM MAY BE USED TO COMPUTE MINIMUM AREA WHERE THE CEILING IS LESS THAN 5'. R304
3. HABITABLE ROOMS OTHER THAN KITCHENS SHALL BE NOT LESS THAN 7' IN ANY DIMENSION. R304.3
4. THERE SHALL BE A CLEAR PASSAGEWAY OF NOT LESS THAN 3' BETWEEN COUNTER FRONTS AND APPLIANCES OR WALLS.

## EGRESS

1. HOUSES SHALL HAVE AT LEAST ONE 3'-0" X 6'-8" SWINGING TYPE EXIT DOOR TO THE EXTERIOR. ANY LOCK SHALL BE OPERABLE FROM THE INSIDE WITHOUT A KEY. R311.2
2. LANDINGS ARE REQUIRED ON BOTH SIDES OF EXTERIOR DOORS. DOOR MAY OPEN AT A LANDING THAT IS NOT MORE THAN 7 3/4" LOWER THAN THE FLOOR LEVEL, PROVIDED THE DOOR DOES NOT SWING OVER THE LANDING. LANDING SHALL BE AT LEAST 36" DEEP. R311.3
3. HALLWAYS SHALL BE NOT LESS THAN 36" WIDE. R311.6
4. HALLWAYS SHALL HAVE A CLEAR CEILING HEIGHT OF NOT LESS THAN 7' MEASURED TO THE LOWEST PROJECTION. R305.1
5. EVERY SLEEPING ROOM AND BASEMENT SHALL HAVE AT LEAST ONE OPERABLE, EXTERIOR WINDOW OR DOOR FOR EMERGENCY ESCAPE OR RESCUE. THE UNITS SHALL BE OPERABLE FROM THE INSIDE TO PROVIDE A FULL CLEAR OPENING WITHOUT THE USE OF TOOLS. ALL OF THE FOLLOWING APPLY. R310
6. MINIMUM NET CLEAR OPENING OF 5.7 SQ. FT. (OPENING AT GRADE LEVEL FLOOR MAY BE 5.0 SQ. FT.)
7. MINIMUM NET CLEAR OPENING HEIGHT DIMENSION OF 24"
8. MINIMUM NET CLEAR OPENING WIDTH DIMENSION OF 20"
9. MAXIMUM FINISHED SILL HEIGHT OF 44" ABOVE THE FLOOR. ALL DOORS OR WINDOWS PROVIDED FOR EMERGENCY ESCAPE OR RESCUE SHALL OPEN DIRECTLY TO A STREET, ALLEY, YARD, OR COURT.
10. WINDOW WELLS FOR EMERGENCY ESCAPE AND RESCUE WINDOWS SHALL HAVE A NET CLEAR OPENING OF 9 SQ. FT. WITH A MINIMUM DIMENSION OF 36". WINDOW WELLS DEEPER THAN 44" SHALL HAVE A PERMANENT LADDER ACCESSIBLE FROM THE WINDOW WHEN FULLY OPEN. LADDERS SHALL BE AT LEAST 12" WIDE AND 3" FROM THE WELL WITH RUNGS NO MORE THAN 18" APART.
11. EMERGENCY ESCAPE WINDOWS ARE ALLOWED TO BE INSTALLED UNDER DECKS AND PORCHES PROVIDED THE LOCATION OF THE DECK ALLOWS THE EMERGENCY ESCAPE WINDOW TO BE FULLY OPENED AND PROVIDES A PATH NOT LESS THAN 36 INCHES IN HEIGHT TO A COURT OR YARD. R310.2.4
12. IN DWELLING UNITS WHERE THE OPENING OF AN OPERABLE WINDOW IS LOCATED MORE THAN 72 INCHES ABOVE THE FINISHED GRADE OR SURFACE BELOW, THE LOWEST PART OF THE CLEAR OPENING OF THE WINDOW SHALL BE A MINIMUM OF 24 INCHES (610 MM) ABOVE THE FINISHED FLOOR OF THE ROOM IN WHICH THE WINDOW IS LOCATED. OPERABLE SECTIONS OF WINDOWS SHALL NOT PERMIT OPENINGS THAT ALLOW PASSAGE OF A 4 INCH (102 MM) DIAMETER SPHERE WHERE SUCH OPENINGS ARE LOCATED WITHIN 24 INCHES (610 MM) OF THE FINISHED FLOOR. R312.2.1 (WINDOW SILLS)
13. EXCEPTIONS:
   - E. WINDOWS WHOSE OPENINGS WILL NOT ALLOW A 4 INCH DIAMETER SPHERE TO PASS THROUGH THE OPENING WHEN THE OPENING IS IN ITS LARGEST OPENED POSITION.
   - F. OPENINGS THAT ARE PROVIDED WITH WINDOW GUARDS THAT COMPLY WITH ASTM F2006 OR F2090

## GLAZING

1. GLASS IN DOORS SHALL BE SAFETY GLAZED. R308.4
2. GLAZING ADJACENT TO A DOOR WITHIN A 24" ARC OF EITHER DOOR EDGE WHEN CLOSED, MUST BE SAFETY GLAZED IF THE BOTTOM EDGE IS WITHIN 60" OF THE FLOOR OR WALKING SURFACE. R308.4.2
3. GLAZING PANELS LARGER THAN 9 SQ. FT. LOCATED LESS THAN 18" ABOVE & WITHIN 36" HORIZONTALLY OF A FLOOR OR WALKING SURFACE SHALL BE SAFETY GLAZED. IN LIEU OF SAFETY GLAZING, GLASS MAY BE PROTECTED BY A HORIZONTAL MEMBER 1-1/2" IN WIDTH, CAPABLE OF RESISTING 50 LBS. PER LINEAL FOOT, LOCATED BETWEEN 34" AND 38" ABOVE WALKING SURFACE. R308.4.3
4. GLAZING IN SHOWER AND BATHTUB ROOMS WITHIN 60" ABOVE THE WALKING SURFACE, INCLUDING ANY WALLS, WINDOWS IN WALLS AND DOORS SHALL BE SAFETY GLAZED. R308.4.5
5. GLAZING WITHIN 5' HORIZONTALLY AND 60" VERTICALLY OF AN INDOOR OR OUTDOOR POOL OR SPA DECK AREA SHALL BE SAFETY GLAZED. R308.4.5
6. GLAZING AT WALLS ENCLOSING STAIRS AND LANDINGS (AND FOR 5' BEYOND THE TOP OR BOTTOM OF THE STAIR) SHALL BE SAFETY GLAZED IF LESS THAN 60" ABOVE THE WALKING SURFACE. R308.4.7
7. GLASS IN RAILINGS SHALL BE TEMPERED OR LAMINATED. R308.4.4
8. SAFETY GLAZING MATERIAL SHALL BE PERMANENTLY LABELED. R308.1
9. ALL EXTERIOR DOORS AND WINDOWS SHALL COMPLY WITH R609.
10. IN DWELLING UNITS, WHERE THE OPENING OF AN OPERABLE WINDOW IS LOCATED MORE THAN 72 INCHES (1829 MM) ABOVE THE FINISHED GRADE OR SURFACE BELOW, THE LOWEST PART OF THE CLEAR OPENING OF THE WINDOW SHALL BE A MINIMUM OF 24 INCHES (610 MM) ABOVE THE FINISHED FLOOR OF THE ROOM IN WHICH THE WINDOW IS LOCATED. OPERABLE SECTIONS OF WINDOWS SHALL NOT PERMIT OPENINGS THAT ALLOW PASSAGE OF A 4 INCH (102 MM) DIAMETER SPHERE WHERE SUCH OPENINGS ARE LOCATED WITHIN 24 INCHES (610 MM) OF THE FINISHED FLOOR. R312.2.1 (WINDOW SILLS)
11. EXCEPTIONS:
   - B. WINDOWS WHOSE OPENINGS WILL NOT ALLOW A 4 INCH DIAMETER SPHERE TO PASS THROUGH THE OPENING WHEN THE OPENING IS IN ITS LARGEST OPENED POSITION.
   - C. OPENINGS THAT ARE PROVIDED WITH WINDOW FALL PREVENTION DEVICES THAT COMPLY WITH SECTION R312.2.1 & 312.2.2.
   - D. OPENINGS THAT ARE PROVIDED WITH FALL PREVENTION DEVICES THAT COMPLY WITH ASTM F2090.
   - E. WINDOWS THAT ARE PROVIDED WITH OPENING LIMITING DEVICES THAT COMPLY WITH SECTION R312.2.2.

## LIGHT, VENT., & SANITATION

1. ALL HABITABLE ROOMS (BEDROOMS, LIVING ROOMS, DINING ROOMS, FAMILY ROOMS, ETC.) SHALL BE PROVIDED WITH NATURAL LIGHT FROM WINDOWS WITH AN AREA OF NOT LESS THAN 8% OR ARTIFICIAL LIGHT PRODUCING 6 FT CANDLES THROUGHOUT. R303.1
2. ALL HABITABLE ROOMS SHALL BE PROVIDED WITH NATURAL VENTILATION BY MEANS OF EXTERIOR OPENINGS WITH AN AREA OF NOT LESS THAN 4% OF THE FLOOR AREA OF EACH ROOM, IN LIEU OF NATURAL VENTILATION, HABITABLE ROOMS MAY BE PROVIDED WITH MECHANICAL VENTILATION CAPABLE OF 0.35 AIR CHANGES PER HOUR WITH 15 CFM OF OUTSIDE AIR PER OCCUPANT. R303.1
3. FOR THE PURPOSE OF LIGHT AND VENTILATION, A ROOM MAY BE CONSIDERED AS A PORTION OF AN ADJOINING ROOM WHEN AT LEAST ONE-HALF OF THE AREA OF THE COMMON WALL IS OPEN, UNOBSTRUCTED AND PROVIDES AN OPENING OF NOT LESS THAN 1/10TH OF THE FLOOR AREA OF THE INTERIOR ROOM OR 25 SQ.FT. WHICH EVER IS GREATER. R303.2
4. THE OPERABLE WINDOW AREA IN BATHROOMS, WATER CLOSET COMPARTMENTS, AND OTHER SIMILAR ROOMS SHALL NOT BE LESS THAN 1-1/2 SQ FT UNLESS A MECHANICAL VENTILATION SYSTEM CAPABLE OF PRODUCING 50 CFM FOR INTERMITTENT OPERATION OR 20 CFM FOR CONTINUOUS OPERATION IS PROVIDED. VENTILATION AIR SHALL BE EXHAUSTED DIRECTLY TO THE OUTSIDE. R303.3 (GARAGE LEVEL)
5. THE HOUSE SHALL HAVE AT LEAST ONE WATER CLOSET, LAVATORY, BATHTUB OR SHOWER AND KITCHEN SINK EQUIPPED WITH HOT AND COLD RUNNING WATER NECESSARY FOR NORMAL OPERATION. R306
6. ENCLOSED ATTICS AND ENCLOSED RAFTER SPACES SHALL HAVE VENTILATION FOR EACH SEPARATE SPACE BY VENTILATING OPENINGS PROTECTED AGAINST RAIN OR SNOW. OPENINGS SHALL BE COVERED WITH A 1/8" TO 1/4" MESH. THE NET FREE VENTILATING AREA SHALL BE NOT LESS THAN 1/150 OF THE AREA OF THE SPACE VENTILATED, OR 1/300 IF 50% TO 80% IS LOCATED IN THE UPPER 3' OF THE ATTIC AND THE REMAINDER IS PROVIDED BY SOFFIT VENTS. WHERE SOFFIT VENTS ARE USED, AN INSULATION DAM MUST BE PROVIDED BETWEEN EVERY TRUSS AND/OR RAFTER. ATTIC VENTILATION MAY ALSO BE 1/300 WHEN A VAPOR BARRIER IS USED AT THE WARM SIDE OF THE CEILING. R806
7. AN ATTIC ACCESS 22"X 30" SHALL BE PROVIDED AT ROOF/CEILING AREAS AND SHALL BE LOCATED IN A CORRIDOR, HALLWAY, OF OTHER READILY ACCESSIBLE LOCATION. THERE SHALL BE 30" OF HEADROOM OVER THE OPENING. IF THERE IS LESS THAN 30" MAXIMUM HEIGHT IN THE ATTIC, ACCESS NEED NOT BE PROVIDED. R807

## STAIRWAYS

1. STAIR TREADS SHALL HAVE A MAXIMUM RISE OF 7.75" AND A MINIMUM RISE OF 4". THE MINIMUM RUN SHALL BE 10". LENGTH OF TREAD IS MEASURED FROM NOSE TO NOSE. THE LARGEST TREAD RUN OR RISER WITHIN ANY FLIGHT OF STAIRS SHALL NOT EXCEED THE SMALLEST BY MORE THAN 3/8". STAIRS SHALL MEET ALL OTHER REQUIREMENTS OF R311.7.5
2. WINDER TREADS SHALL HAVE A MINIMUM TREAD DEPTH OF 10 INCHES MEASURED AS ABOVE AT A POINT 12 INCHES FROM THE SIDE WHERE THE TREADS ARE NARROWER. WINDER TREADS SHALL HAVE A MINIMUM TREAD DEPTH OF 6 INCHES AT ANY POINT. WITHIN ANY FLIGHT OF STAIRS, THE GREATEST WINDER TREAD DEPTH AT THE 12 INCH WALK LINE SHALL NOT EXCEED THE SMALLEST BY MORE THAN 3/8 INCH. R311.7.5.2.1
3. STAIRWAYS SHALL NOT BE LESS THAN 36" IN WIDTH.
4. EVERY STAIRWAY AND RAMP SHALL HAVE A LANDING WITH A DIMENSION OF AT LEAST EXCEED 36" MEASURED IN THE DIRECTION OF TRAVEL.
5. STAIRWAYS WITH 4 OR MORE RISERS SHALL HAVE AT LEAST ONE HANDRAIL. SEE IRC 2015 SECTION 311.7.8
6. STAIRS SHALL HAVE A HEADROOM CLEARANCE OF NOT LESS THAN 6'-8". CLEARANCE IS MEASURED VERTICALLY FROM A LINE ALONG THE TREAD NOSING TO THE SOFFIT ABOVE AT ALL NOSE. R311.7.2
7. ENCLOSED SPACE UNDER STAIRS SHALL HAVE THE WALLS AND SOFFIT PROTECTED ON THE ENCLOSED SIDE WITH 1/2" SHEETROCK. R302.7
8. 36" HIGH GUARDS SHALL BE PROVIDED ON PORCHES, BALCONIES AND RAISED FLOOR SURFACES LOCATED MORE THAN 30" ABOVE THE FLOOR OR GRADE BELOW. OPEN SIDES OF STAIRS WITH A TOTAL RISE OF 30" ABOVE THE FLOOR OR GRADE BELOW SHALL HAVE GUARDS AT LEAST 34" HIGH.
9. GUARDS WILL HAVE AN ORNAMENTAL PATTERN SUCH THAT A SPHERE 4" IN DIAMETER CANNOT PASS THROUGH. THE TRIANGULAR SPACE CREATED BY THE STAIR AND A BOTTOM RAIL MAY BE CONSTRUCTED SO A 6" SPHERE WILL NOT PASS THROUGH.
10. RAMPS SLOPE NOT TO EXCEED 1 UNIT VERTICAL IN 12 UNITS HORIZONTAL. IRC 2015 SECTION 311.8
11. GUARDRAIL CONNECTION DETAILS SHALL BE ADEQUATE TO SUPPORT 200 LBS. OF HORIZONTAL FORCE PER LINEAL FOOT ACTING AT A RIGHT ANGLE TO THE TOP RAIL.
12. HANDRAILS SHALL COMPLY WITH IRC 311.7.8

## PLUMBING & MECHANICAL

1. EACH WATER CLOSET SHALL BE LOCATED IN A CLEAR SPACE NOT LESS THAN 30" IN WIDTH (15" FROM THE CENTER TO ANY OBSTRUCTION) AND HAVE A CLEAR SPACE IN FRONT OF NOT LESS THAN 21". FIGURE 307.1
2. A SHOWER COMPARTMENT SHALL BE 30" SQUARE MIN. WITH 24" CLEAR SPACE IN FRONT. R307.1
3. CEMENT, FIBER-CEMENT OR GLASS MAT GYPSUM BACKERS INSTALLED IN ACCORDANCE WITH MANUFACTURES RECOMMENDATIONS SHALL BE USED AS BACKERS FOR WALL TILE IN TUB AND SHOWER AREAS AND WALL PANELS IN SHOWER AREAS. 702.4.2
4. ALL APPLIANCES (WATER HEATER, BOILER, ETC.) WHICH REQUIRE PRESSURE RELIEF VALVES SHALL BE PROVIDED WITH A FULL SIZED DRAIN WHICH SHALL EXTEND FROM THE VALVE TO AN INDIRECT WASTE, SUCH AS A FLOOR DRAIN. ALL FLOOR DRAINS SHALL HAVE TRAP PRIMERS OR DEEP SEAL DESIGN. P2803 & P3201.2
5. GAS FIRED FURNACES AND WATER HEATERS SHALL NOT BE LOCATED IN A BEDROOM, BATHROOM, STORAGE CLOSET, TOILET ROOM OR IN ANY ENCLOSED SPACE WITH ACCESS ONLY THROUGH SUCH A ROOM OR SPACE. G2406
6. WATER HEATERS AND HEATING APPLIANCES LOCATED IN GARAGES WHICH GENERATE A GLOW, SPARK OR FLAME SHALL BE INSTALLED WITH THE PILOTS, BURNERS OR HEATING ELEMENTS AND SWITCHES AT LEAST 18" ABOVE THE FLOOR LEVEL. G2408.2
7. THE WATER HEATER SPACE AND FURNACE ROOM SHALL HAVE AN OPENING OR DOOR WITH A CONTINUOUS PASSAGEWAY AT LEAST 2' IN WIDTH AND LARGE ENOUGH TO PERMIT REMOVAL OF THE LARGEST EQUIPMENT IN THE ROOM. M1305.1.2
8. IT SHALL BE POSSIBLE TO REMOVE WATER HEATERS WITHOUT FIRST REMOVING ANY PERMANENT PART OF THE STRUCTURE. M1305.1
9. AN UNOBSTRUCTED WORKING SPACE AT LEAST 30" DEEP AND THE HEIGHT OF THE FURNACE OR WATER HEATER (30" MINIMUM) SHALL BE PROVIDED ALONG THE ENTIRE FRONT OR FIREBOX SIDE OF THE FURNACE. M1305
10. THE BUILDING SHALL COMPLY WITH CHAPTER 17 OF THE IRC SECTION M1701.
11. A FURNACE SHALL NOT BE INSTALLED IN A CLOSET OR ALCOVE LESS THAN 12" WIDER THAN THE FURNACE AND SHALL PROVIDE A MINIMUM WORKING SPACE OF 3" ALONG THE SIDES, BACK, AND TOP. M1305.1.1
12. A FURNACE SHALL NOT BE INSTALLED WITH A CLEARANCE OF LESS THAN 6" ALONG THE COMBUSTION CHAMBER OPENING SIDE. M1305.1.1
13. THE AIR REMOVED BY EVERY MECHANICAL EXHAUST SYSTEM SHALL BE DISCHARGED TO THE OUTDOORS. AIR SHALL NOT BE EXHAUSTED INTO AN ATTIC, SOFFIT, RIDGE VENT OR CRAWL SPACE. IRC M1501.1
14. ALL DRYER EXHAUST SYSTEMS SHALL BE COMPLIANT WITH M1502
15. COOKING APPLIANCES SHALL BE TESTED, LISTED AND LABELED AS HOUSEHOLD TYPE FOR DOMESTIC USE AND INSTALLED PER THE MANUFACTURER'S INSTRUCTIONS. G2447
16. A EVAPORATIVE COOLER MUST BE LOCATED A MINIMUM OF 10' FROM ALL VENTS, FLUES AND EXHAUST TERMINATIONS. FLUES MAY BE EXTENDED 3' ABOVE INTAKE OPENING OF EVAPORATIVE COOLER IN LIEU OF 10' HORIZONTAL SEPARATION.
17. WATER CLOSETS SHALL HAVE A MAXIMUM FLOW RATE OF 1.6 GALLONS PER FLUSH. SHOWER HEADS SHALL HAVE A MAXIMUM FLOW RATE OF 2.5 GPM. P2903.2
18. WATER HAMMER ARRESTERS ARE REQUIRED WITH QUICK-CLOSING VALVES (DISH CLOTHES WASHERS). P2903.5
19. THE HOT WATER SUPPLIED TO BATHTUBS AND WHIRLPOOL TUBS SHALL BE LIMITED TO A MAXIMUM TEMPERATURE OF 120 F BY A WATER TEMPERATURE LIMITING DEVICE THAT CONFORMS TO ASSE 1016,EXCEPT WHERE SUCH PROTECTION IS OTHERWISE PROVIDED BY A COMBINATION TUB/SHOWER VALVE IN ACCORDANCE WITH SECTION P2708.4
20. FIXTURES THAT HAVE FLOOD LEVEL RIMS LOCATED BELOW THE ELEVATION OF THE NEXT UPSTREAM MANHOLE COVER OF THE PUBLIC SEWER SERVING SUCH FIXTURES SHALL BE PROTECTED FROM BACK FLOW OR SEWAGE BY INSTALLING AN APPROVED BACKWATER P 3008
21. PROVIDE ACCESS TO MOTORS AND PUMPS ON ALL JETTED TUBS.
22. PROVIDE NON-FREEZE TYPE BACK FLOW PREVENTION HOSE BIBS IRC P2902.3.3 & P2903.10
23. PROVIDE AN EXPANSION TANK ON THE CULINARY WATER SYSTEM. LOCATE IN MECHANICAL ROOM. P2903.4
24. IN SEISMIC DESIGN CATEGORIES C, D0, D1, AND D2, WATER HEATER SHALL BE ANCHORED OR STRAPPED IN THE UPPER THIRD AND LOWER ONE-THIRD OF THE APPLIANCE TO RESIST A HORIZONTAL FORCE EQUAL TO ONE-THIRD OF THE OPERATION WEIGHT. IRC P2801.8
25. FLOOR DRAINS SHALL BE PROVIDED NEAR ALL WATER HEATERS.
26. FLOOR DRAINS SHALL BE FULLY VISIBLE AND ACCESSIBLE.
27. PLUMBING AND CONDUIT PENETRATIONS OF THE SEPARATION WALL BETWEEN THE GARAGE AND THE RESIDENCE SHALL BE OF COPPER OF FERROUS.
28. ALL FUEL BURNING APPLIANCES SHALL BE PROVIDED WITH COMBUSTION AIR IN ACCORDANCE WITH THE APPLIANCE MANUFACTURES INSTALLATION INSTRUCTIONS. OIL-FIRED APPLIANCES SHALL BE PROVIDED WITH COMBUSTION AIR IN ACCORDANCE WITH NFPA 31. IRC M1701.1
29. PROVIDE GAS LOGS AND EACH GAS APPLIANCE WITH A SHUTOFF VALVE WITHIN 6 FEET OF THE APPLIANCE. IRC G2420 (G2420.5)
30. HYDROMASSAGE MOTORS SHALL BE PROVIDED WITH ADEQUATE VENTILATION, BE ACCESSIBLE BY WAY OF REMOVABLE PANEL OR DOOR AND BE ON A DEDICATED GFCI CIRCUIT.
31. ANY JETTED TUBS TO HAVE AN ACCESS DOOR TO MOTOR OF 12"X12" IF DISTANCE TO MOTOR FROM ACCESS PANEL IS EQUAL TO OR LESS THAN 24", OR 18"X18" GREATER THAN 24".
32. HEATING AND COOLING SYSTEM SHALL BE DESIGNED TO ACCA MANUAL S&J OR OTHER APPROVED CALCULATION. IRC N1103.7
33. SHOWER DOOR MUST HAVE A 22" CLEAR OPENING & TILE AROUND TUBS MUST HAVE A FIBER CEMENT BACKER BOARD.
34. SHOWER PANS MUST HAVE AN APPROVED LINER ENDING 3" ABOVE THE FINISHED THRESHOLD, SOLID BLOCKING IS REQUIRED BEHIND THE LINER. NOTE THAT THE SLOPE MUST BE BUILT UP UNDER THE LINER.
35. ALL BATHTUBS AND SHOWERS SHALL HAVE AN ANTI-SCALD VALVE LIMITING WATER TEMPERATURE TO 120 DEGREES.
36. HOT WATER HEATERS MUST HAVE AN EXPANSION TANK, 2 SEISMIC STRAPS, AND A T&P VALVE A PAN IS REQUIRED IF A LEAK WILL DAMAGE THE PROPERTY.
37. PROVIDE BACKFLOW PREVENTORS OR VACUUM BREAKERS FOR PROTECTION OF POTABLE WATER ON HOSE BIBS, IRRIGATION OR SPRINKLER SYSTEMS, BOILERS, ETC.
38. PROVIDE BACKWATER VALVES FOR DWV THAT ARE LOWER THAN THE NEAREST MANHOLE COVER. THIS WILL REQUIRE THAT BASEMENT WASTE SYSTEMS WILL BE PLUMBED INDEPENDENTLY.
39. A PERMANENT CERTIFICATE SHALL BE POSTED ON OR IN THE ELECTRICAL DISTRIBUTION PANEL LISTING THE PREDOMINANT R-VALUES OF INSULATION INSTALLED IN OR ON CEILING/ROOF, WALLS, FOUNDATION, (SLAB, BASEMENT WALL, CRAWLSPACE WALL AND/OR FLOOR) AND DUCTS OUTSIDE THE CONDITIONED SPACES; U-FACTORS OF WINDOWS, AND SOLAR HEAT GAIN COEFFICIENT OF WINDOWS. THE TYPE AND EFFICIENCY OF HEATING, COOLING AND SERVICE WATER HEATING EQUIPMENT SHALL ALSO BE LISTED. IRC N1101.14
40. DUCTWORK IN UNCONDITIONED SPACES WILL HAVE R-8 VALUE INSULATION.
41. CONTRACTOR TO VERIFY ALL ROUGH OPENING SIZES WITH EQUIPMENT, FIXTURE, WINDOWS, DOORS, AND OTHER ITEMS WERE DIFFERENT MANUFACTURES WITH HAVE DIFFERENT ROUGH OPENING SIZES. CONTRACTOR TO VERIFY ALL TUB DIMENSIONS WITH TUBS TO BE USED.
42. INSULATE HEATING TRUNK AND BRANCH SUPPLY DUCTS IN UNFINISHED AREAS, CRAWL SPACES, ATTICS, UNHEATED GARAGES, ETC. IRC M1601
43. VENT THE DRYER TO THE OUTSIDE. IN ACCORDANCE TO IRC M1502.2
44. COMBUSTION AIR FOR ALL FUEL-BURNING APPLIANCES MUST BE SHOWN AT A MINIMUM RATE OF 1 SQ INCH PER 3000 BTU/HOUR INPUT. OPENING MUST BE IN THE TOP 12 INCHES OF THE ROOM. MINIMUM OF 1 INCH CLEARANCE MUST BE SHOWN AROUND EQUIPMENT AT SIDES AND REAR OF THE APPLIANCE. SHOW MINIMUM 6 INCHES OF CLEARANCE IN FRONT OF APPLIANCES. IRC G2407.6.2
45. FLOOR DRAINS TO HAVE TRAP PRIMERS OR DEEP SEAL TRAPS.

## RES-CHECK

1. AN ENERGY ANALYSIS SHOULD BE ATTACHED TO / OR INCLUDED WITH THE PLAN WHEN TURNED INTO THE CITY. THIS SERVICE IS NOT PROVIDED BY DRIFTWOOD HOME DESIGN, IT MUST BE PROVIDED BY THE MECHANICAL OR INSULATION CONTRACTOR.
2. A PERMANENT CERTIFICATE SHALL BE POSTED ON OR IN THE ELECTRICAL DISTRIBUTION PANEL LISTING THE PREDOMINANT R-VALUES OF INSULATION INSTALLED IN OR ON CEILING/ROOF, WALLS, FOUNDATION, (SLAB, BASEMENT WALL, CRAWLSPACE WALL AND/OR FLOOR) AND DUCTS OUTSIDE THE CONDITIONED SPACES; U-FACTORS OF WINDOWS, AND SOLAR HEAT GAIN COEFFICIENT OF WINDOWS. THE TYPE AND EFFICIENCY OF HEATING, COOLING AND SERVICE WATER HEATING EQUIPMENT SHALL ALSO BE LISTED. IRC N1101.14

## ELECTRICAL

1. LIGHTING OUTLETS
   - A. AT LEAST ONE WALL SWITCH CONTROLLED LIGHTING OUTLET SHALL BE INSTALLED IN EVERY HABITABLE ROOM; IN BATHROOMS, HALLWAYS, STAIRWAYS, ATTACHED GARAGES AND DETACHED GARAGES WITH ELECTRIC POWER; AND AT OUTDOOR ENTRANCES (NOT INCLUDING GARAGE OVERHEAD OR VEHICLE DOORS). IN HABITABLE ROOMS, OTHER THAN KITCHENS AND BATHROOMS, RECEPTACLES CONTROLLED BY A WALL SWITCH IS PERMITTED IN LIEU OF LIGHTING OUTLETS. IRC E3905.2 & .3
   - B. AT LEAST ONE SWITCH CONTROLLED, LIGHTING OUTLET IS REQUIRED AT THE ENTRY OF ATTIC, CRAWL SPACE, UTILITY ROOM OR BASEMENT WITH STORAGE OR EQUIPMENT. THE LIGHTING OUTLET SHALL BE PROVIDED AT OR NEAR ANY EQUIPMENT REQUIRING SERVICING. IRC E3903.4
   - C. LIGHTING IS REQUIRED FOR ALL INTERIOR AND EXTERIOR STAIRWAYS. LIGHTING OUTLETS AT STAIRS SHALL BE SWITCHED AT EACH FLOOR LEVEL WHERE THE DIFFERENCE BETWEEN FLOOR LEVELS IS SIX STEPS OR MORE. IRC E3903.2 & .3
   - D. INCANDESCENT FIXTURES IN CLOSETS SHALL BE A MINIMUM OF 12" FROM ANY SHELF EDGE, MEASURED HORIZONTALLY (6" FOR FLUORESCENT FIXTURES). THE DIMENSION FOR SHELVES LESS THAN 12" WIDE WILL BE 24" FROM THE WALL. IRC E4003.12
   - E. ALL LIGHT FIXTURES AND SWITCHES IN BATHROOM / SHOWER AREAS OR IN DAMP OR WET LOCATIONS SHALL COMPLY WITH THE IRC E4003.9 - E4003.11
2. RECEPTACLE OUTLETS
   - A. RECEPTACLES SHALL BE INSTALLED SO THAT NO POINT MEASURED HORIZONTALLY ALONG THE FLOOR LINE IN ANY WALL SPACE IS MORE THAN 6 FEET FROM A RECEPTACLE OUTLET. IRC E3901.2.1 & E3901.2.2
   - B. KITCHEN AND DINING AREA COUNTER TOPS SHALL HAVE RECEPTACLE OUTLETS AT EACH COUNTER SPACE WIDER THAN 12". RECEPTACLES SHALL BE INSTALLED SO THAT NO POINT ALONG THE WALL LINE IS MORE THAN 24" FROM AN OUTLET. ONE OUTLET IS REQUIRED FOR ISLAND AND PENINSULAR COUNTER TOPS WHICH SHALL BE INSTALLED ABOVE OR WITHIN 12" BELOW THE COUNTER TOP. (RECEPTACLE OUTLETS SHALL NOT BE INSTALLED IN A FACE UP POSITION ON COUNTERTOP) IRC E3901.4.1 - E3901.4.5
   - C. 125V SINGLE PHASE, 15 OR 20 AMPERE RATED RECEPTACLE OUTLET SHALL BE INSTALLED AT AN ACCESSIBLE LOCATION FOR THE SERVICING OF HEATING, AIR-CONDITIONING AND REFRIGERATION EQUIPMENT. OUTLET SHALL BE INSTALLED AT THE SAME LEVEL AND WITHIN 25 FEET OF THE EQUIPMENT. IRC E3901.12
   - D. OUTLETS SHALL BE INSTALLED IN BATHROOMS WITHIN 36"OF THE OUTSIDE EDGE OF THE BASIN ON THE WALL ADJACENT TO THE BASIN. IRC E3901.6
   - E. AT LEAST TWO OUTLETS THAT ARE ACCESSIBLE AT GROUND LEVEL SHALL BE INSTALLED OUTDOORS. THERE SHALL BE A MINIMUM OF ONE

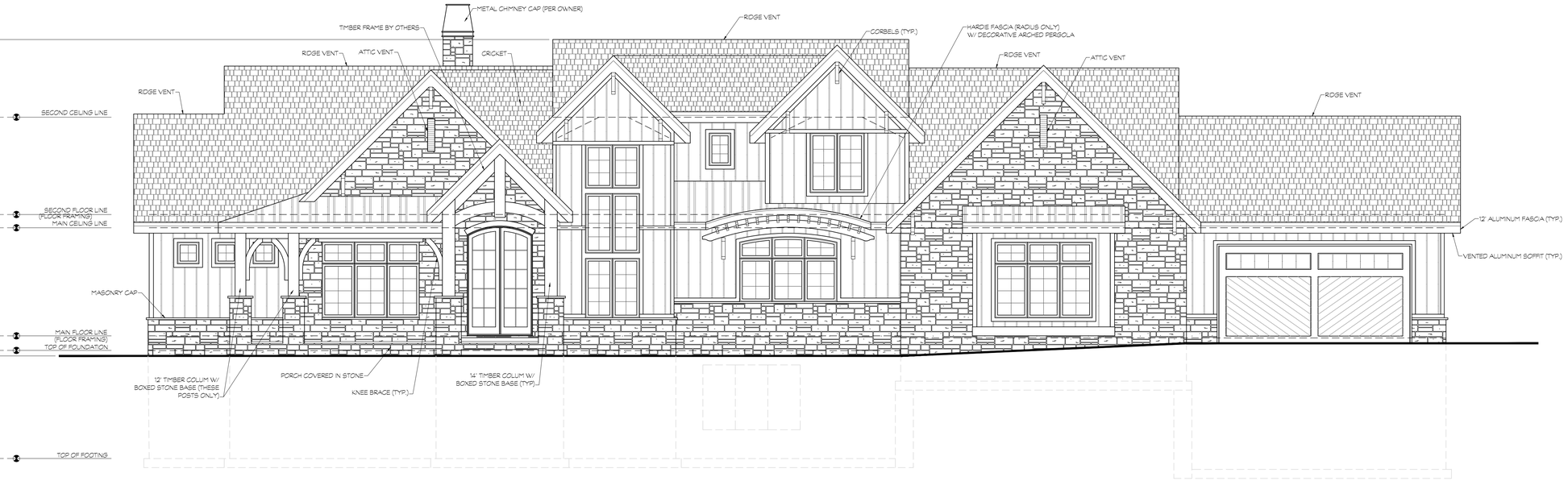


1 A1.1

# FRONT ELEVATION

SCALE: 3/16" = 1'-0" SQ. FT. N/A

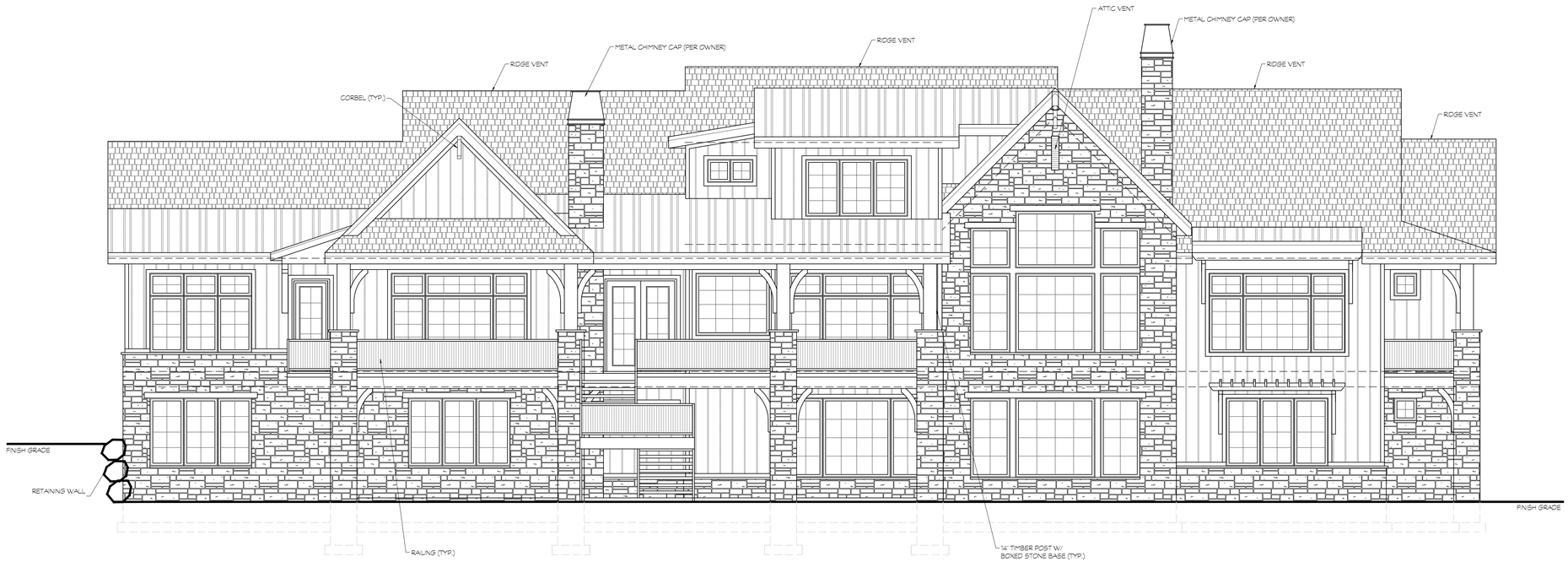


2 A1.1

# REAR ELEVATION

SCALE: 3/16" = 1'-0" SQ. FT. N/A

## GENERAL NOTES:

1. GENERAL CONTRACTOR IS RESPONSIBLE FOR ALL SITE WORK (I.E. EXCAVATION, BACKFILL, GRADE, COMPACTING, ETC.) ALL WORK MUST BE IAW LATEST APPROVED EDITION OF INTERNATIONAL RESIDENTIAL CODE AND ALL LOCAL CODES.
2. PROVIDE METAL FLASHING OR 15 LB FELT BETWEEN WOOD EXTERIOR WALL AND CONCRETE SLABS, PORCH CAPS, DECKS, ETC.
3. PROVIDE ALL EXTERIOR OPENINGS WITH FLASHING, COUNTER FLASHING AND CAULKING WITH THE PROPER TYPE OF SEALANT. SEALING AND INSTALLATION OF WINDOWS MUST BE IAW MANUFACTURER'S INSTRUCTIONS (SEE IRC SEC R703.4 AND R613.1)
4. APPROVED NUMBERS SHALL BE PROVIDED FOR ALL NEW BUILDINGS IN SUCH A POSITION AS TO BE PLAINLY VISIBLE AND LEGIBLE FROM THE STREET OR ROAD FRONTING THE PROPERTY IAW IRC SEC. R319.1
5. INSPECTIONS BY BUILDING INSPECTOR AS DEEMED NECESSARY IAW IRC SEC R109.1
6. ALL WOOD, HARDBOARD OR STRUCTURAL PANEL SIDING SHALL COMPLY WITH IAW IRC SEC. R703.1. DETAILS TO BE PROVIDED BY OWNER OR CONTRACTOR.
7. PROVIDE ATTIC VENTILATION IAW IRC R806
8. ROOFING MATERIAL AND APPLICATION SHALL BE IAW INTERNATIONAL RESIDENTIAL CODE SEC. R905
9. PROVIDE FLASHING IAW INTERNATIONAL RESIDENTIAL CODE AS FOLLOWS:
   - ARCHITECTURAL SHINGLES - R905.2.8
   - TILE ROOF - R905.3.8
   - METAL ROOF - R905.4.6
   - CEDAR SHAKES - R905.8.8
10. ALL RAILINGS SHALL BE 36" HIGH RAILING W/ BALUSTER PATTERN SUCH THAT A 4" DIAMETER SPHERE CANNOT PASS THROUGH (SEE IRC SEC. R312)
11. APPLY BRICK AND STONE IAW IRC SEC. R703
12. PROVIDE ROCK RETAINING AS REQUIRED
13. DOORS AND WINDOWS AS PER FLOOR PLANS & OWNER/CONTRACTOR.
14. DECORATIVE SHROUDS SHALL NOT BE INSTALLED AT THE TERMINATION OF FACTORY BUILT CHIMNEYS EXCEPT WHERE THE SHROUDS ARE LISTED AND LABELED FOR USE WITH THE SPECIFIC CHIMNEY SYSTEM AND INSTALLED ACCORDING TO THE MANUFACTURER'S INSTRUCTIONS.
15. PROVIDE SUPPORT OF MASONRY VENEER W/ STEEL ANGLE AT CHIMNEYS AS PER IRC R703.7.2.2

## MATERIALS SCHEDULE

| | |
|---|---|
| | BOARD AND BATTEN HARDIE PANEL |
| | 2" STONE |
| | STANDING SEAM METAL ROOF |
| | MIN. 30 YR. ARCHITECTURAL ASPHALT SHINGLES |

REVISIONS

DRIFTWOOD HOME DESIGN
PH. 801-857-9633 | WWW.DRIFTWOODPLANS.COM

DESIGNED FOR:

# CARROLL RESIDENCE

WILLOW CANYON SUBDIVISION, PLAT2B, LOT 30, ALPINE, UTAH

DATE: 3-1-2021
SCALE: AS NOTED
DRAWN BY: JAC
FILE NAME: 20-031

EXTERIOR ELEVATIONS
A1.1

THESE PLANS AND DOCUMENTS ARE THE PROPERTY OF DRIFTWOOD HOME DESIGN, AND ANY REUSE OR FURTHER DISTRIBUTION THEREOF IN PART OR IN WHOLE WITHOUT THE WRITTEN PERMISSION OF DRIFTWOOD HOME DESIGN IS PROHIBITED. © COPYRIGHT DRIFTWOOD HOME DESIGN - DESIGNER IS NOT AN ARCHITECT OR ENGINEER. PLANS ARE INCOMPLETE WITHOUT ATTACHED ENGINEERING SPECS. VERIFY ALL DIMENSIONS, CONDITIONS, AND MEASUREMENTS ON SITE PRIOR TO CONSTRUCTION.

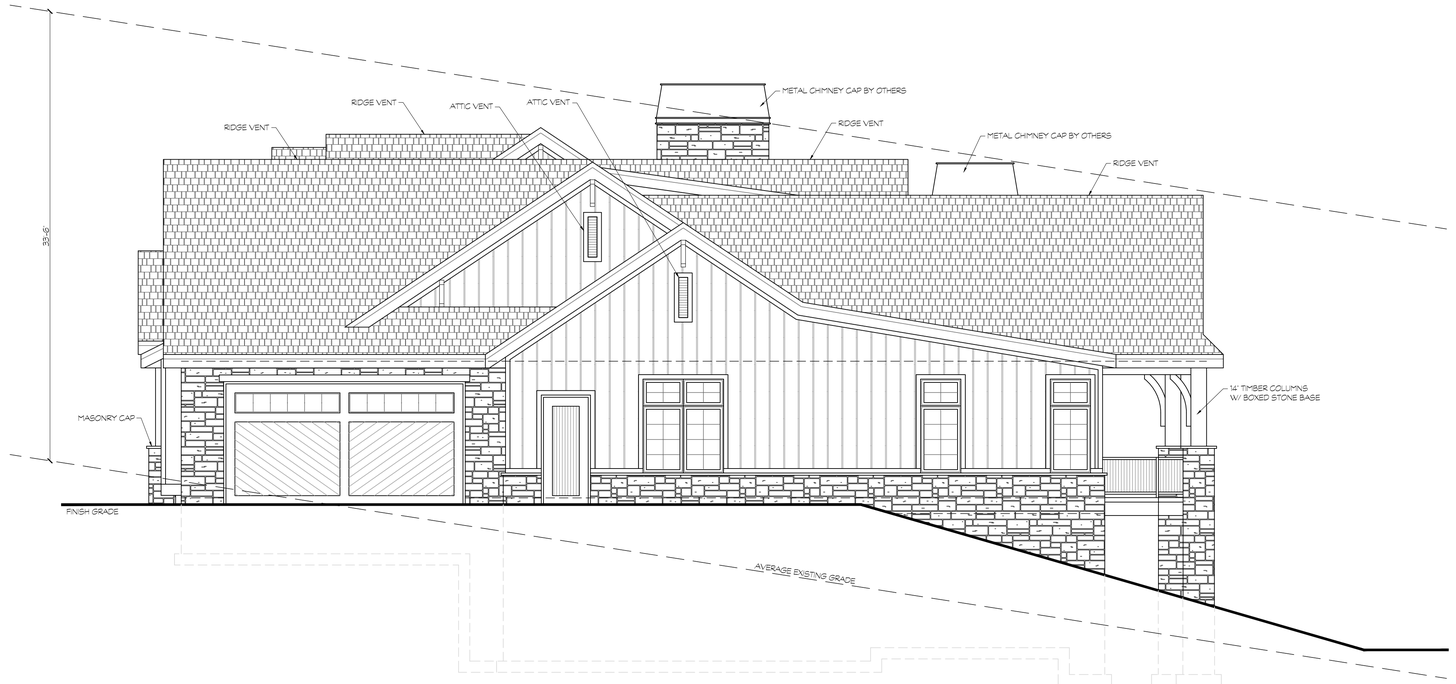


1 A1.2

# RIGHT ELEVATION

SCALE: 3/16" = 1'-0" SQ. FT. N/A

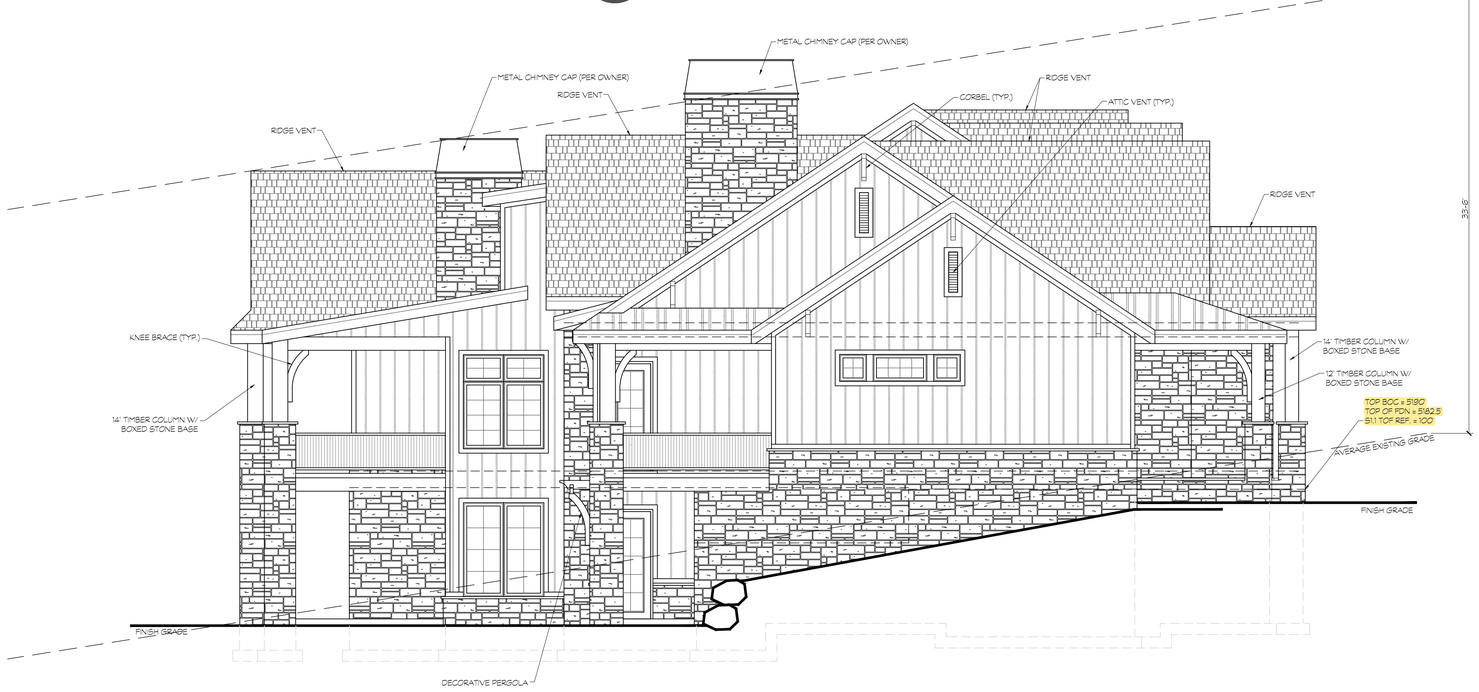


2 A1.2

# LEFT ELEVATION

SCALE: 3/16" = 1'-0" SQ. FT. N/A

## GENERAL NOTES:

1. GENERAL CONTRACTOR IS RESPONSIBLE FOR ALL SITE WORK (I.E. EXCAVATION, BACKFILL, GRADE, COMPACTING, ETC.) ALL WORK MUST BE IAW LATEST APPROVED EDITION OF INTERNATIONAL RESIDENTIAL CODE AND ALL LOCAL CODES.
2. PROVIDE METAL FLASHING OR 15 LB FELT BETWEEN WOOD EXTERIOR WALL AND CONCRETE SLABS, PORCH CAPS, DECKS, ETC.
3. PROVIDE ALL EXTERIOR OPENINGS WITH FLASHING, COUNTER FLASHING AND CAULKING WITH THE PROPER TYPE OF SEALANT. SEALING AND INSTALLATION OF WINDOWS MUST BE IAW MANUFACTURER'S INSTRUCTIONS (SEE IRC SEC R703.4 AND R613.1)
4. APPROVED NUMBERS SHALL BE PROVIDED FOR ALL NEW BUILDINGS IN SUCH A POSITION AS TO BE PLAINLY VISIBLE AND LEGIBLE FROM THE STREET OR ROAD FRONTING THE PROPERTY IAW IRC SEC. R319.1
5. INSPECTIONS BY BUILDING INSPECTOR AS DEEMED NECESSARY IAW IRC SEC R109.1
6. ALL WOOD, HARDBOARD OR STRUCTURAL PANEL SIDING SHALL COMPLY WITH IAW IRC SEC. R703.1. DETAILS TO BE PROVIDED BY OWNER OR CONTRACTOR.
7. PROVIDE ATTIC VENTILATION IAW IRC R806
8. ROOFING MATERIAL AND APPLICATION SHALL BE IAW INTERNATIONAL RESIDENTIAL CODE SEC. R905
9. PROVIDE FLASHING IAW INTERNATIONAL RESIDENTIAL CODE AS FOLLOWS:
   - ARCHITECTURAL SHINGLES - R905.2.8
   - TILE ROOF - R905.3.8
   - METAL ROOF - R905.4.6
   - CEDAR SHAKES - R905.8.8
10. ALL RAILINGS SHALL BE 36" HIGH RAILING W/ BALUSTER PATTERN SUCH THAT A 4" DIAMETER SPHERE CANNOT PASS THROUGH (SEE IRC SEC. R312)
11. APPLY BRICK AND STONE IAW IRC SEC. R703
12. PROVIDE ROCK RETAINING AS REQUIRED
13. DOORS AND WINDOWS AS PER FLOOR PLANS & OWNER/CONTRACTOR.
14. DECORATIVE SHROUDS SHALL NOT BE INSTALLED AT THE TERMINATION OF FACTORY BUILT CHIMNEYS EXCEPT WHERE THE SHROUDS ARE LISTED AND LABELED FOR USE WITH THE SPECIFIC CHIMNEY SYSTEM AND INSTALLED ACCORDING TO THE MANUFACTURER'S INSTRUCTIONS.
15. PROVIDE SUPPORT OF MASONRY VENEER W/ STEEL ANGLE AT CHIMNEYS AS PER IRC R703.7.2.2

## MATERIALS SCHEDULE

| | |
|---|---|
| | BOARD AND BATTEN HARDIE PANEL |
| | 2" STONE |
| | STANDING SEAM METAL ROOF |
| | MIN. 30 YR. ARCHITECTURAL ASPHALT SHINGLES |

REVISIONS

DRIFTWOOD HOME DESIGN
PH. 801-857-9633 | WWW.DRIFTWOODPLANS.COM

DESIGNED FOR:

CARROLL RESIDENCE

WILLOW CANYON SUBDIVISION, PLAT2B, LOT 30, ALPINE, UTAH

DATE: 3-1-2021
SCALE: AS NOTED
DRAWN BY: JAC
FILE NAME: 20-031

EXTERIOR ELEVATIONS
A1.2

THESE PLANS AND DOCUMENTS ARE THE PROPERTY OF DRIFTWOOD HOME DESIGN, AND ANY REUSE OR FURTHER DISTRIBUTION THEREOF IN PART OR IN WHOLE WITHOUT THE WRITTEN PERMISSION OF DRIFTWOOD HOME DESIGN IS PROHIBITED. © COPYRIGHT DRIFTWOOD HOME DESIGN - DESIGNER IS NOT AN ARCHITECT OR ENGINEER. PLANS ARE INCOMPLETE WITHOUT ATTACHED ENGINEERING SPECS. VERIFY ALL DIMENSIONS, CONDITIONS, AND MEASUREMENTS ON SITE PRIOR TO CONSTRUCTION.

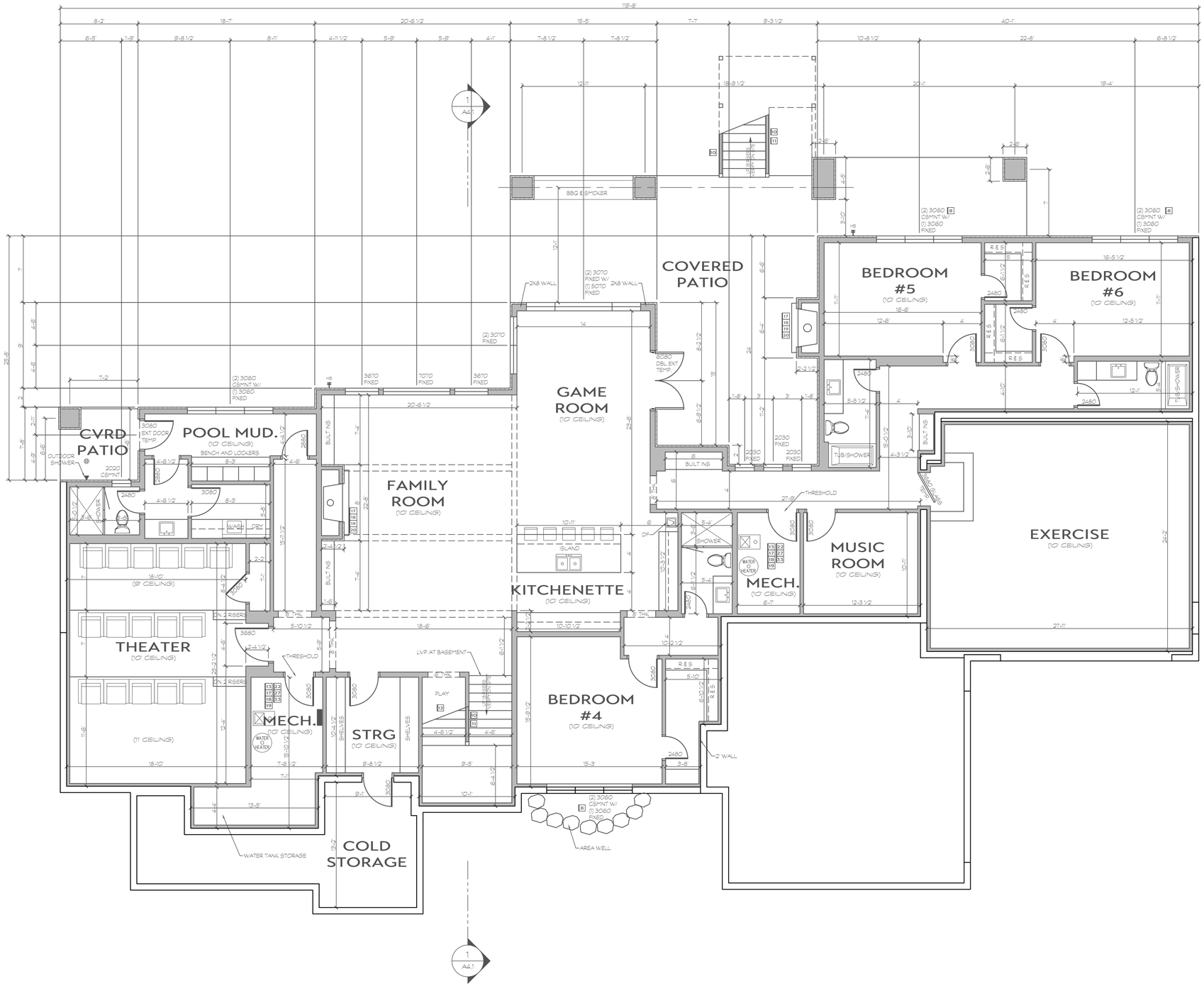


# BASEMENT FLOOR PLAN

1 / A2.1

SCALE: 3/16" = 1'-0"  SQ. FT. 5229

## GENERAL NOTES - KEYED AS NEEDED

1. ALL DIMENSIONS ON SITE SHALL BE VERIFIED BY GENERAL AND SUB CONTRACTORS. REPORT ANY DISCREPANCIES TO DESIGNER PRIOR TO CONSTRUCTION.
2. ALL WORK SHALL BE IN STRICT ACCORDANCE WITH THE LATEST EDITION OF THE INTERNATIONAL RESIDENTIAL CODE AND LOCAL ORDINANCES.
3. ALL EXTERIOR AND INTERIOR WALLS ARE DRAWN AND DIMENSIONED TO FINISHED WALLS AND ARE SHOWN AT 6 1/2" AND 4 1/2" RESPECTIVELY (UNLESS OTHERWISE NOTED).
4. BRICK AND STONE ARE DIMENSIONED AT 4" AND CULTURED/THIN CUT STONE ARE DIMENSIONED AT 2" (TO BE VERIFIED WITH MANUFACTURER).
5. VERIFY INSULATION REQUIREMENTS WITH RES CHECK (BY OTHERS).
6. SEE ADDITIONAL NOTES - SHEET A4.2

WINDOWS & EGRESS

7. ALL STYLES AND TYPES OF INTERIOR FINISHES (I.E. DOORS, HARDWARE, WINDOWS, PAINT, FLOOR COVERINGS, APPLIANCES, ETC.) SHALL BE DETERMINED BY OWNER OR CONTRACTOR AS NEEDED.
8. VERIFY WINDOW MEETS EGRESS PER MANUF. SPECS AND IRC.
9. PROVIDE 36" DEEP WINDOW WELL (9 SQ. FT. FLOOR AREA) W/ LADDER AS REQ'D IAW IRC SEC. R310.2

RAILING & STAIRS

10. 36" HIGH GUARDS SHALL BE PROVIDED ON PORCHES, BALCONIES AND RAISED FLOOR SURFACES LOCATED MORE THAN 30" ABOVE THE FLOOR OR GRADE BELOW. OPEN SIDES OF STAIRS WITH A TOTAL RISE OF 30" ABOVE THE FLOOR OR GRADE BELOW SHALL HAVE GUARDS AT LEAST 34" HIGH. GUARDS WILL HAVE AN ORNAMENTAL PATTERN SUCH THAT A SPHERE 4" IN DIAMETER CANNOT PASS THROUGH. THE TRIANGULAR SPACE CREATED BY THE STAIR AND A BOTTOM RAIL MAY BE CONSTRUCTED SO A 6" SPHERE WILL NOT PASS THROUGH.
11. PROVIDE HANDRAIL FROM NOSING OF TOP STAIR TO NOSING OF BOTTOM STAIR PER IRC
12. PROVIDE MIN 1/2" GYP BOARD ON WALLS AND CEILING BELOW STAIRS IAW IRC SEC. R302.7

PLUMBING/MECHANICAL/ELECTRICAL

13. PROVIDE FLOOR DRAIN.
14. PROVIDE NON-FREEZE HOSE BIBS, INCLUDING AUTO WASHER VALVE IN GARAGE. MUST BE BACK FLOW PROTECTED.
15. GAS PIPING SHALL NOT PENETRATE BUILDING FOUNDATION AT ANY POINT BELOW GRADE
16. GAS PIPING INSTALLED UNDERGROUND BENEATH BUILDINGS IS PROHIBITED EXCEPT WHERE THE PIPING IS ENCASED IN A CONDUIT. SUCH CONDUIT SHALL EXTEND NOT LESS THAN 4" OUTSIDE THE BUILDING, SHALL BE VENTED ABOVE GRADE TO THE OUTDOORS AND SHALL BE INSTALLED AS TO PREVENT THE ENTRANCE OF WATER AND INSECTS.
17. A PERMANENT CERTIFICATE SHALL BE POSTED ON OR IN THE ELECTRICAL DISTRIBUTION PANEL LISTING THE PREDOMINANT R-VALUES OF INSULATION INSTALLED IN OR ON CEILING/ROOF, WALLS, FOUNDATION, (SLAB, BASEMENT WALL, CRAWLSPACE WALL AND/OR FLOOR) AND DUCTS OUTSIDE THE CONDITIONS SPACES. U-FACTORS FOR FENESTRATION: AND THE SOLAR HEAT GAIN COEFFICIENT (SHGC) OF FENESTRATION. WHERE THERE IS MORE THAN ONE VALUE FOR EACH COMPONENT, CERTIFICATE SHALL LIST THE TYPE AND EFFICIENCY OF HEATING, COOLING, AND SERVICE WATER HEATING EQUIPMENT.
18. COMBUSTION AIR FOR ALL FUEL BURNING APPLIANCES ARE TO HAVE A MINIMUM RATE OF 1 SQ. INCH PER 3000 BTU/HR INPUT. THE ONE OPENING MUST BE IN THE TOP 12" OF THE ROOM. HAVE A MIN. OF 1" CLEARANCE AROUND EQUIPMENT AT SIDES AND REAR OF THE APPLIANCE. ASSURE MIN. 6" CLEARANCE IN FRONT OF APPLIANCE.
19. GAS LOGS AND GAS APPLIANCES ARE TO HAVE SHUT-OFF VALVE WITHIN 6FT. OF THE APPLIANCE. IRC G2420
20. "0" CLEARANCE GAS FIREPLACE INSTALL PER MANUF. SPEC. - LISTING FOR THE FIREPLACES SHALL BE PROVIDED AT MECHANICAL INSPECTION.
21. FUEL BURNING EQUIPMENT LOCATION PER M1401.1
22. IN SEISMIC DESIGN CATEGORIES C, D0, D1, AND D2, WATER HEATER SHALL BE ANCHORED OR STRAPPED IN THE UPPER THIRD AND LOWER ONE-THIRD OF THE APPLIANCE TO RESIST A HORIZONTAL FORCE EQUAL TO ONE THIRD OF THE OPERATING WEIGHT. IRC P2801.7. SEE SHEET A4.2/DETAIL.
23. INSULATE HEATING TRUNK AND BRANCH SUPPLY DUCTS IN UNFINISHED AREAS, CRAWL SPACES, ATTICS, UNHEATED GARAGES, ETC. IRC N1103
26. DUCT TESTING WILL BE REQUIRED WHERE AIR HANDLERS OR MORE THAN 25% OF THE DUCT WORK IS OUTSIDE OF THE THERMAL ENVELOPE.
27. ALL PLUMBING VENTS THAT VENT THROUGH THE ROOF ARE TO BE MINIMUM 3" PIPE. IRC P3103.2
28. ALL TOILETS SHALL BE 1.6 GPM IAW IRC SEC. P2903
29. ALL TUBS & SHOWERS SHALL HAVE 2.5 GPM HEADS IAW IRC SEC. P2903
30. TUBS AND SHOWERS WITH TILED WALLS NOW REQUIRE CEMENT, FIBER-CEMENT OR GLASS MAT GYPSUM BACKERS. IAW IRC SEC. R702.4
31. BATHTUBS AND WHIRLPOOL TUBS MUST HAVE ANTI SCALD MIXING VALVES LIMITING WATER TEMPERATURE TO 120 DEGREES. IAW IRC SEC. P2713.3.LOCATE EXPANSION TANK FOR CULINARY WATER SYSTEM AS PER CODE.
33. UFER GROUND IS TO BE LOCATED AND VERIFIED ON SITE BY CONTRACTOR IAW IRC SEC. E3507.2 AND NEC 250.50

ADDITIONAL NOTES

34. 6-MIL POLYETHYLENE OR APPROVED VAPOR RETARDANT (WITH JOINTS LAPPED NO LESS THAN 6") SHALL BE PLACED BETWEEN THE BASEMENT FLOOR SLAB AND THE SUB GRADE IAW IRC R506.2.3
35. PROVIDE 22" X 30" ATTIC ACCESS AND LATCHED ATTIC ACCESS AS SHOWN (SEE IRC SEC. R807.1) CONTRACTOR TO VERIFY LOCATION.
36. FIRE SEPARATION BETWEEN HOUSE AND GARAGE:
    - A. THE GARAGE SHALL BE SEPARATED FROM THE RESIDENCE AND ITS ATTIC AREA BY NOT LESS THAN 1/2" GYPSUM BOARD APPLIED TO THE GARAGE SIDE. GARAGES BENEATH HABITABLE ROOMS SHALL BE SEPARATED FROM ALL HABITABLE SPACES ABOVE BY NOT LESS THAN 5/8" TYPE 'X' GYPSUM BOARD. WHERE THE SEPARATION IS A FLOOR/CEILING ASSEMBLY, THE STRUCTURE SUPPORTING THE SEPARATION SHALL ALSO BE PROTECTED BY NOT LESS THAN 1/2" GYPSUM BOARD IRC R302.6
    - B. ANY DOOR BETWEEN THE HOUSE AND GARAGE SHALL BE A TIGHT FITTING, SOLID WOOD OR HOLLOW METAL DOOR, 1-3/8" THICK OR A 20 MINUTE LABELED WITH CLOSER - SEE THE 2018 IRC R302.5.1
    - C. DUCT PENETRATIONS SHALL BE BY MINIMUM 26 GAUGE SHEET METAL, NO OPENINGS INTO THE GARAGE ARE PERMITTED. IRC 302.5.2

## WALL SCHEDULE

| | |
|---|---|
| | FRAMED WALL (SEE A4.2-12) |
| | MASONRY LEDGE (SEE A4.2-11) |

REVISIONS

DRIFTWOOD HOME DESIGN
PH. 801-857-9633 | WWW.DRIFTWOODPLANS.COM

DESIGNED FOR:
CARROLL RESIDENCE
WILLOW CANYON SUBDIVISION, PLAT2B, LOT 30, ALPINE, UTAH

DATE: 3-1-2021
SCALE: AS NOTED
DRAWN BY: JAC
FILE NAME: 20-031

BASEMENT FLOOR PLAN
A2.1

THESE PLANS AND DOCUMENTS ARE THE PROPERTY OF DRIFTWOOD HOME DESIGN, AND ANY REUSE OR FURTHER DISTRIBUTION THEREOF IN PART OR IN WHOLE WITHOUT THE WRITTEN PERMISSION OF DRIFTWOOD HOME DESIGN IS PROHIBITED. © COPYRIGHT DRIFTWOOD HOME DESIGN - DESIGNER IS NOT AN ARCHITECT OR ENGINEER. PLANS ARE INCOMPLETE WITHOUT ATTACHED ENGINEERING SPECS. VERIFY ALL DIMENSIONS, CONDITIONS, AND MEASUREMENTS ON SITE PRIOR TO CONSTRUCTION.

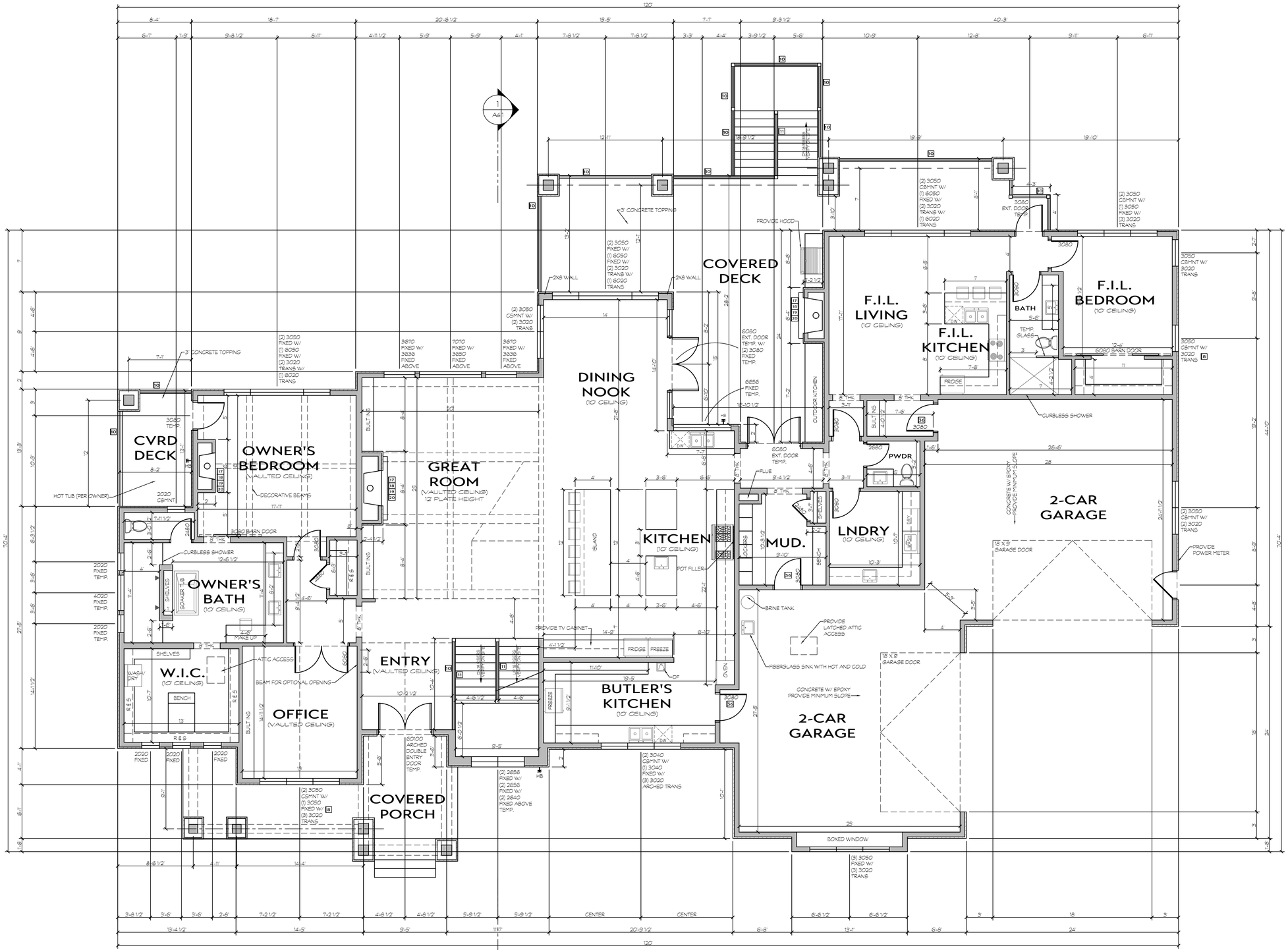


1 A2.2 **MAIN FLOOR PLAN**

SCALE: 3/16" = 1'-0" SQ. FT. 4170

## GENERAL NOTES - KEYED AS NEEDED

1. ALL DIMENSIONS ON SITE SHALL BE VERIFIED BY GENERAL AND SUB CONTRACTORS. REPORT ANY DISCREPANCIES TO DESIGNER PRIOR TO CONSTRUCTION.
2. ALL WORK SHALL BE IN STRICT ACCORDANCE WITH THE LATEST EDITION OF THE INTERNATIONAL RESIDENTIAL CODE AND LOCAL ORDINANCES.
3. ALL EXTERIOR AND INTERIOR WALLS ARE DRAWN AND DIMENSIONED TO FINISHED WALLS AND ARE SHOWN AT 6 1/2" AND 4 1/2" RESPECTIVELY (UNLESS OTHERWISE NOTED).
4. BRICK AND STONE ARE DIMENSIONED AT 4" AND CULTURED/THIN CUT STONE ARE DIMENSIONED AT 2" (TO BE VERIFIED WITH MANUFACTURER).
5. VERIFY INSULATION REQUIREMENTS WITH RES CHECK (BY OTHERS).
6. SEE ADDITIONAL NOTES - SHEET A4.2

WINDOWS & EGRESS

7. ALL STYLES AND TYPES OF INTERIOR FINISHES (I.E. DOORS, HARDWARE, WINDOWS, PAINT, FLOOR COVERINGS, APPLIANCES, ETC.) SHALL BE DETERMINED BY OWNER OR CONTRACTOR AS NEEDED.
8. VERIFY WINDOW MEETS EGRESS PER MANUF. SPECS AND IRC.
9. PROVIDE 36" DEEP WINDOW WELL (9 SQ. FT. FLOOR AREA) W/ LADDER AS REQ'D IAW IRC SEC. R310.2

RAILING & STAIRS

10. 36" HIGH GUARDS SHALL BE PROVIDED ON PORCHES, BALCONIES AND RAISED FLOOR SURFACES LOCATED MORE THAN 30" ABOVE THE FLOOR OR GRADE BELOW. OPEN SIDES OF STAIRS WITH A TOTAL RISE OF 30" ABOVE THE FLOOR OR GRADE BELOW SHALL HAVE GUARDS AT LEAST 34" HIGH. GUARDS WILL HAVE AN ORNAMENTAL PATTERN SUCH THAT A SPHERE 4" IN DIAMETER CANNOT PASS THROUGH. THE TRIANGULAR SPACE CREATED BY THE STAIR AND A BOTTOM RAIL MAY BE CONSTRUCTED SO A 6" SPHERE WILL NOT PASS THROUGH.
11. PROVIDE HANDRAIL FROM NOSING OF TOP STAIR TO NOSING OF BOTTOM STAIR PER IRC
12. PROVIDE MIN 1/2" GYP BOARD ON WALLS AND CEILING BELOW STAIRS IAW IRC SEC. R302.7

PLUMBING/MECHANICAL/ELECTRICAL

13. PROVIDE FLOOR DRAIN.
14. PROVIDE NON-FREEZE HOSE BIBS, INCLUDING AUTO WASHER VALVE IN GARAGE. MUST BE BACK FLOW PROTECTED.
15. GAS PIPING SHALL NOT PENETRATE BUILDING FOUNDATION AT ANY POINT BELOW GRADE
16. GAS PIPING INSTALLED UNDERGROUND BENEATH BUILDINGS IS PROHIBITED EXCEPT WHERE THE PIPING IS ENCASED IN A CONDUIT. SUCH CONDUIT SHALL EXTEND NOT LESS THAN 4" OUTSIDE THE BUILDING, SHALL BE VENTED ABOVE GRADE TO THE OUTDOORS AND SHALL BE INSTALLED AS TO PREVENT THE ENTRANCE OF WATER AND INSECTS.
17. A PERMANENT CERTIFICATE SHALL BE POSTED ON OR IN THE ELECTRICAL DISTRIBUTION PANEL LISTING THE PREDOMINANT R-VALUES OF INSULATION INSTALLED IN OR ON CEILING/ROOF, WALLS, FOUNDATION, (SLAB, BASEMENT WALL, CRAWLSPACE WALL AND/OR FLOOR) AND DUCTS OUTSIDE THE CONDITIONS SPACES. U-FACTORS FOR FENESTRATION: AND THE SOLAR HEAT GAIN COEFFICIENT (SHGC) OF FENESTRATION. WHERE THERE IS MORE THAN ONE VALUE FOR EACH COMPONENT, CERTIFICATE SHALL LIST THE TYPE AND EFFICIENCY OF HEATING, COOLING, AND SERVICE WATER HEATING EQUIPMENT.
18. COMBUSTION AIR FOR ALL FUEL BURNING APPLIANCES ARE TO HAVE A MINIMUM RATE OF 1 SQ. INCH PER 3000 BTU/HR INPUT. THE ONE OPENING MUST BE IN THE TOP 12" OF THE ROOM. HAVE A MIN. OF 1" CLEARANCE AROUND EQUIPMENT AT SIDES AND REAR OF THE APPLIANCE. ASSURE MIN. 6" CLEARANCE IN FRONT OF APPLIANCE.
19. GAS LOGS AND GAS APPLIANCES ARE TO HAVE SHUT-OFF VALVE WITHIN 6FT. OF THE APPLIANCE. IRC G2420
20. "0" CLEARANCE GAS FIREPLACE INSTALL PER MANUF. SPEC. - LISTING FOR THE FIREPLACES SHALL BE PROVIDED AT MECHANICAL INSPECTION.
21. FUEL BURNING EQUIPMENT LOCATION PER M1401.1
22. IN SEISMIC DESIGN CATEGORIES C, D0, D1, AND D2, WATER HEATER SHALL BE ANCHORED OR STRAPPED IN THE UPPER THIRD AND LOWER ONE-THIRD OF THE APPLIANCE TO RESIST A HORIZONTAL FORCE EQUAL TO ONE THIRD OF THE OPERATING WEIGHT. IRC P2801.7. SEE SHEET A4.2/DETAIL.
23. INSULATE HEATING TRUNK AND BRANCH SUPPLY DUCTS IN UNFINISHED AREAS, CRAWL SPACES, ATTICS, UNHEATED GARAGES, ETC. IRC N1103
26. DUCT TESTING WILL BE REQUIRED WHERE AIR HANDLERS OR MORE THAN 25% OF THE DUCT WORK IS OUTSIDE OF THE THERMAL ENVELOPE.
27. ALL PLUMBING VENTS THAT VENT THROUGH THE ROOF ARE TO BE MINIMUM 3" PIPE. IRC P3103.2
28. ALL TOILETS SHALL BE 1.6 GPM IAW IRC SEC. P2903
29. ALL TUBS & SHOWERS SHALL HAVE 2.5 GPM HEADS IAW IRC SEC. P2903
30. TUBS AND SHOWERS WITH TILED WALLS NOW REQUIRE CEMENT, FIBER-CEMENT OR GLASS MAT GYPSUM BACKERS. IAW IRC SEC. R702.4
31. BATHTUBS AND WHIRLPOOL TUBS MUST HAVE ANTI SCALD MIXING VALVES LIMITING WATER TEMPERATURE TO 120 DEGREES. IAW IRC SEC. P2713.3LOCATE EXPANSION TANK FOR CULINARY WATER SYSTEM AS PER CODE.
33. UFER GROUND IS TO BE LOCATED AND VERIFIED ON SITE BY CONTRACTOR IAW IRC SEC. E3507.2 AND NEC 250.50

ADDITIONAL NOTES

34. 6-MIL POLYETHYLENE OR APPROVED VAPOR RETARDANT (WITH JOINTS LAPPED NO LESS THAN 6") SHALL BE PLACED BETWEEN THE BASEMENT FLOOR SLAB AND THE SUB GRADE IAW IRC R506.2.3
35. PROVIDE 22" X 30" ATTIC ACCESS AND LATCHED ATTIC ACCESS AS SHOWN (SEE IRC SEC. R807.1) CONTRACTOR TO VERIFY LOCATION.
36. FIRE SEPARATION BETWEEN HOUSE AND GARAGE:
    - A. THE GARAGE SHALL BE SEPARATED FROM THE RESIDENCE AND ITS ATTIC AREA BY NOT LESS THAN 1/2" GYPSUM BOARD APPLIED TO THE GARAGE SIDE. GARAGES BENEATH HABITABLE ROOMS SHALL BE SEPARATED FROM ALL HABITABLE SPACES ABOVE BY NOT LESS THAN 5/8" TYPE 'X' GYPSUM BOARD. WHERE THE SEPARATION IS A FLOOR/CEILING ASSEMBLY, THE STRUCTURE SUPPORTING THE SEPARATION SHALL ALSO BE PROTECTED BY NOT LESS THAN 1/2" GYPSUM BOARD IRC R302.6
    - B. ANY DOOR BETWEEN THE HOUSE AND GARAGE SHALL BE A TIGHT FITTING, SOLID WOOD OR HOLLOW METAL DOOR, 1-3/8" THICK OR A 20 MINUTE LABELED WITH CLOSER - SEE THE 2018 IRC R302.5.1
    - C. DUCT PENETRATIONS SHALL BE BY MINIMUM 26 GAUGE SHEET METAL, NO OPENINGS INTO THE GARAGE ARE PERMITTED. IRC 302.5.2

| WALL SCHEDULE | |
|---|---|
| | FRAMED WALL (SEE A4.2-12) |
| | MASONRY LEDGE (SEE A4.2-11) |

REVISIONS

DRIFTWOOD HOME DESIGN
PH. 801-857-9633 | WWW.DRIFTWOODPLANS.COM

DESIGNED FOR:

# CARROLL RESIDENCE

WILLOW CANYON SUBDIVISION, PLAT2B, LOT 30, ALPINE, UTAH

DATE: 3-1-2021
SCALE: AS NOTED
DRAWN BY: JAC
FILE NAME: 20-031

FIRST FLOOR PLAN
A2.2

THESE PLANS AND DOCUMENTS ARE THE PROPERTY OF DRIFTWOOD HOME DESIGN, AND ANY REUSE OR FURTHER DISTRIBUTION THEREOF IN PART OR IN WHOLE WITHOUT THE WRITTEN PERMISSION OF DRIFTWOOD HOME DESIGN IS PROHIBITED. © COPYRIGHT DRIFTWOOD HOME DESIGN - DESIGNER IS NOT AN ARCHITECT OR ENGINEER. PLANS ARE INCOMPLETE WITHOUT ATTACHED ENGINEERING SPECS. VERIFY ALL DIMENSIONS, CONDITIONS, AND MEASUREMENTS ON SITE PRIOR TO CONSTRUCTION.

THESE PLANS AND DOCUMENTS ARE THE PROPERTY OF DRIFTWOOD HOME DESIGN, AND ANY REUSE OR FURTHER DISTRIBUTION THEREOF IN PART OR IN WHOLE WITHOUT THE WRITTEN PERMISSION OF DRIFTWOOD HOME DESIGN IS PROHIBITED. © COPYRIGHT DRIFTWOOD HOME DESIGN - DESIGNER IS NOT AN ARCHITECT OR ENGINEER. PLANS ARE INCOMPLETE WITHOUT ATTACHED ENGINEERING SPECS. VERIFY ALL DIMENSIONS, CONDITIONS, AND MEASUREMENTS ON SITE PRIOR TO CONSTRUCTION.

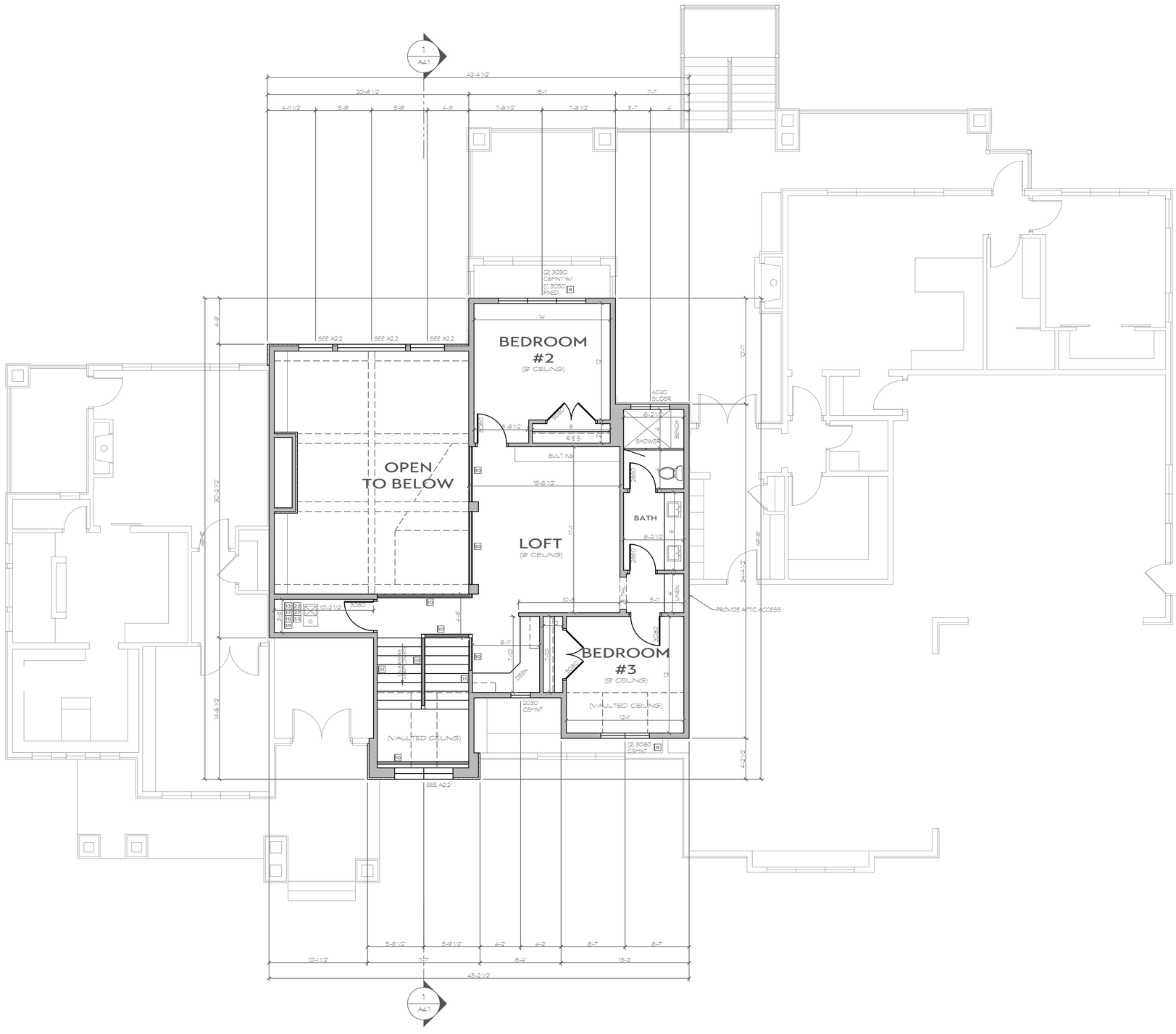


## WALL SCHEDULE

| | |
|---|---|
| | FRAMED WALL (SEE A4.2-12) |
| | MASONRY LEDGE (SEE A4.2-11) |

# SECOND FLOOR PLAN

1 / A2.3

SCALE: 3/16" = 1'-0" SQ. FT. 997

REVISIONS

DRIFTWOOD HOME DESIGN
PH. 801-857-9633 | WWW.DRIFTWOODPLANS.COM

DESIGNED FOR:

# CARROLL RESIDENCE

WILLOW CANYON SUBDIVISION, PLAT2B, LOT 30, ALPINE, UTAH

DATE: 3-1-2021
SCALE: AS NOTED
DRAWN BY: JAC
FILE NAME: 20-031

SECOND FLOOR PLAN
A2.3

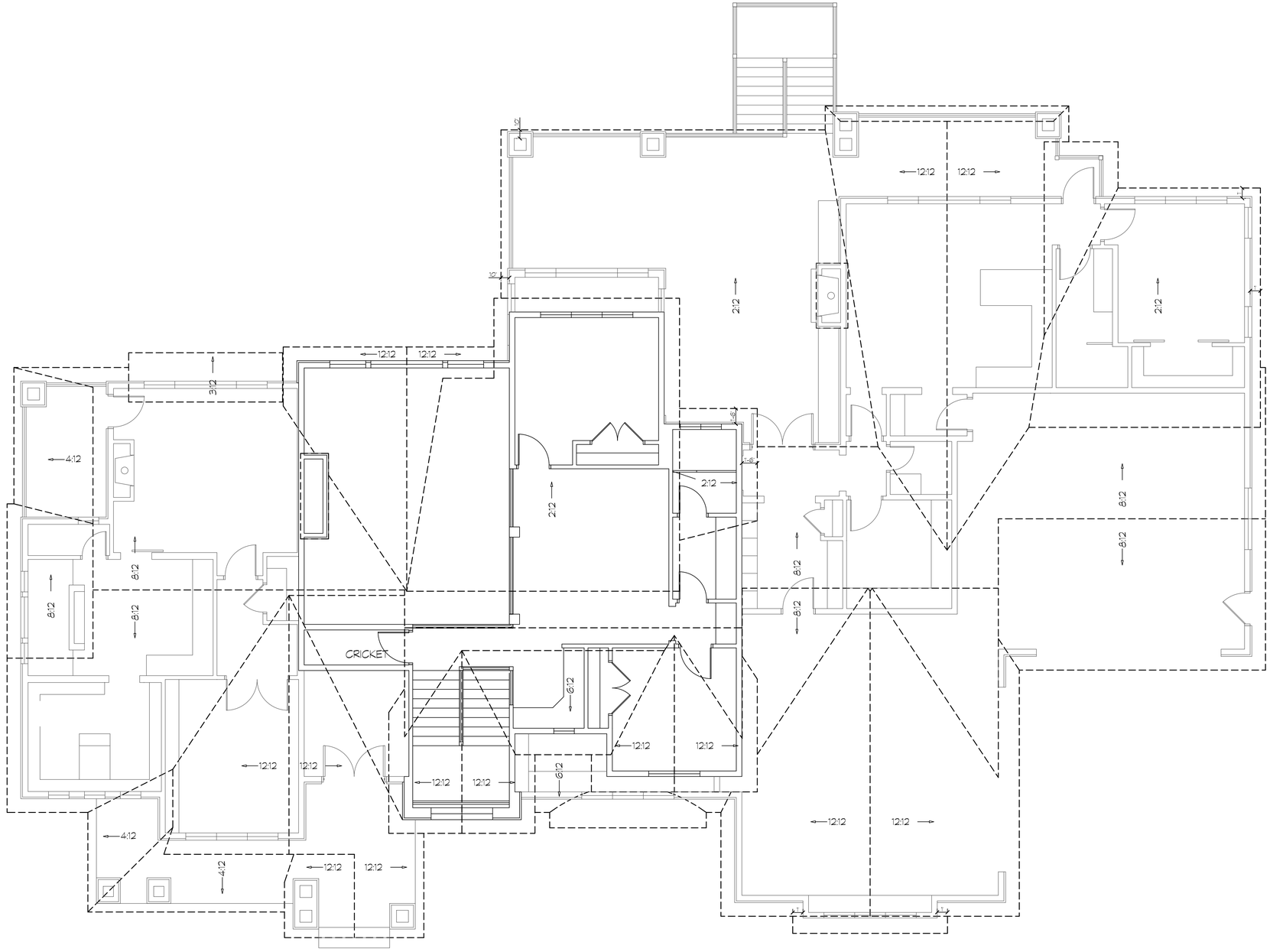


1 A3.1 **ROOF DRAINAGE**
SCALE: 3/16" = 1'-0" SQ. FT. N/A

## GENERAL NOTES:

1. GENERAL CONTRACTOR IS RESPONSIBLE FOR VERIFYING ROOF PITCHES AND HEEL HEIGHTS OF TRUSSES PRIOR TO CONSTRUCTION AND ADJUSTING IF NECESSARY.
2. TRUSS MANUFACTURER IS RESPONSIBLE FOR CALLING OUT HEEL HEIGHTS ON TRUSS SCHEMATICS.
3. GENERAL CONTRACTOR IS RESPONSIBLE FOR LOCATING ALL APPLIANCE AND MECHANICAL VENTILATION AND WHERE THEY BREAK THE SURFACE OF THE ROOF.

## TRUSS NOTES:

1. ALL ROOF OVERHANGS TO BE 18" UNLESS NOTED
2. ALL 12/12 HEEL HEIGHTS TO BE 24" UNLESS NOTED
3. ADJUST GREATER OR LESSER PITCHED TRUSSES FOR ALIGNED FASCIAS
3. NOTIFY DRIFTWOOD HOME DESIGN OF ANY TRUSS ISSUES PRIOR TO MANUFACTURING.

REVISIONS

DRIFTWOOD HOME DESIGN
PH. 801-857-9633 | WWW.DRIFTWOODPLANS.COM

DESIGNED FOR:
CARROLL RESIDENCE
WILLOW CANYON SUBDIVISION, PLAT2B, LOT 30, ALPINE, UTAH

DATE: 3-1-2021
SCALE: AS NOTED
DRAWN BY: JAC
FILE NAME: 20-031

ROOF DRAINAGE PLAN
A3.1

THESE PLANS AND DOCUMENTS ARE THE PROPERTY OF DRIFTWOOD HOME DESIGN, AND ANY REUSE OR FURTHER DISTRIBUTION THEREOF IN PART OR IN WHOLE WITHOUT THE WRITTEN PERMISSION OF DRIFTWOOD HOME DESIGN IS PROHIBITED. © COPYRIGHT DRIFTWOOD HOME DESIGN - DESIGNER IS NOT AN ARCHITECT OR ENGINEER. PLANS ARE INCOMPLETE WITHOUT ATTACHED ENGINEERING SPECS. VERIFY ALL DIMENSIONS, CONDITIONS, AND MEASUREMENTS ON SITE PRIOR TO CONSTRUCTION.

THESE PLANS AND DOCUMENTS ARE THE PROPERTY OF DRIFTWOOD HOME DESIGN, AND ANY REUSE OR FURTHER DISTRIBUTION THEREOF IN PART OR IN WHOLE WITHOUT THE WRITTEN PERMISSION OF DRIFTWOOD HOME DESIGN IS PROHIBITED. © COPYRIGHT DRIFTWOOD HOME DESIGN - DESIGNER IS NOT AN ARCHITECT OR ENGINEER. PLANS ARE INCOMPLETE WITHOUT ATTACHED ENGINEERING SPECS. VERIFY ALL DIMENSIONS, CONDITIONS, AND MEASUREMENTS ON SITE PRIOR TO CONSTRUCTION.

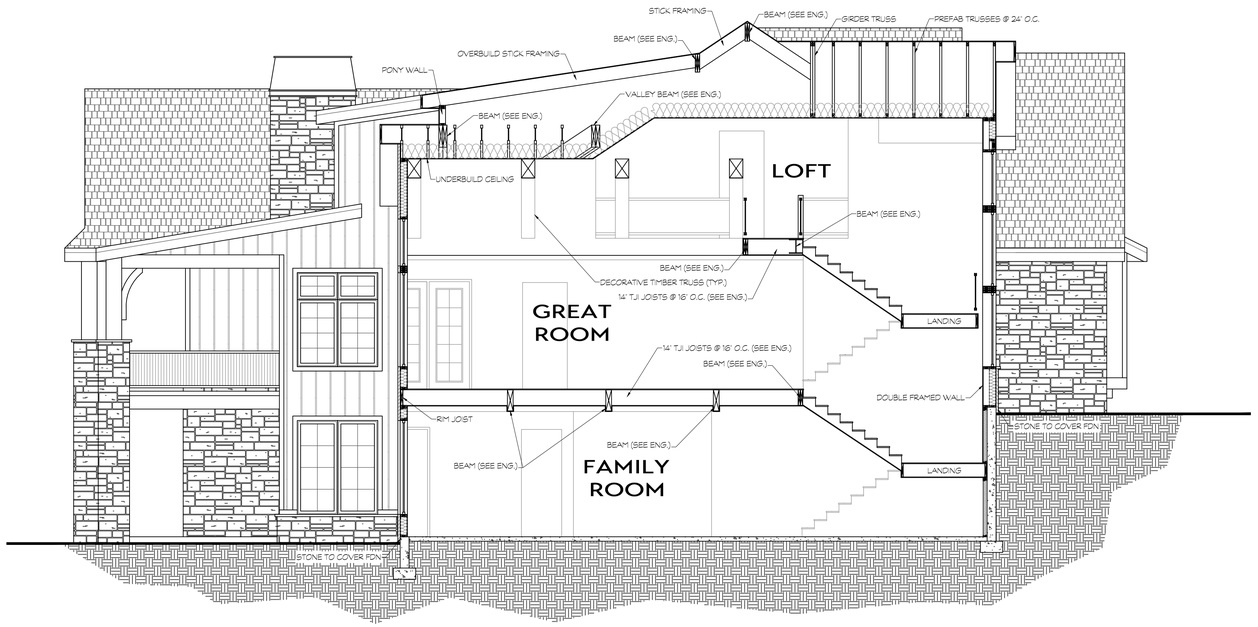


1
A4.1

## SECTION

SCALE: 3/16" = 1'-0" SQ. FT. N/A

REVISIONS

DRIFTWOOD HOME DESIGN
PH. 801-857-9633 | WWW.DRIFTWOODPLANS.COM

DESIGNED FOR:

# CARROLL RESIDENCE

WILLOW CANYON SUBDIVISION, PLAT2B, LOT 30, ALPINE, UTAH

DATE: 3-1-2021
SCALE: AS NOTED
DRAWN BY: JAC
FILE NAME: 20-031

BUILDING SECTIONS
A4.1

THESE PLANS AND DOCUMENTS ARE THE PROPERTY OF DRIFTWOOD HOME DESIGN, AND ANY REUSE OR FURTHER DISTRIBUTION THEREOF IN PART OR IN WHOLE WITHOUT THE WRITTEN PERMISSION OF DRIFTWOOD HOME DESIGN IS PROHIBITED. © COPYRIGHT DRIFTWOOD HOME DESIGN - DESIGNER IS NOT AN ARCHITECT OR ENGINEER. PLANS ARE INCOMPLETE WITHOUT ATTACHED ENGINEERING SPECS. VERIFY ALL DIMENSIONS, CONDITIONS, AND MEASUREMENTS ON SITE PRIOR TO CONSTRUCTION.

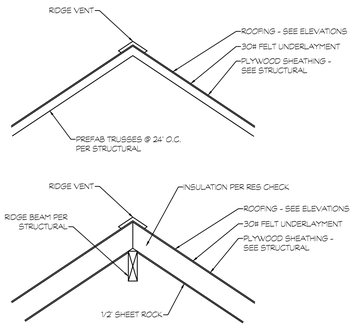


1 PREFAB TRUSS AND STICK FRAME RIDGE DETAIL
NOT TO SCALE

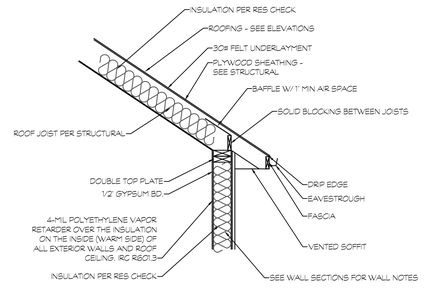


2 STICK FRAME DETAIL
NOT TO SCALE

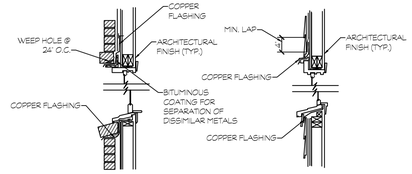


3 GENERAL WINDOW FLASHING DETAILS
NOT TO SCALE

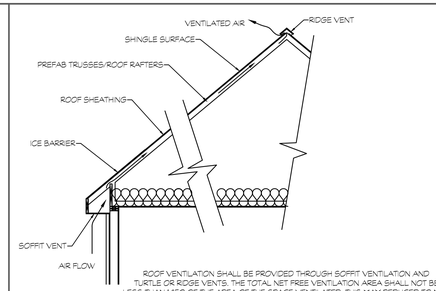


ROOF VENTILATION SHALL BE PROVIDED THROUGH SOFFIT VENTILATION AND TURTLE OR RIDGE VENTS. THE TOTAL NET FREE VENTILATION AREA SHALL NOT BE LESS THAN 1/150 OF THE AREA OF THE SPACE VENTILATED. THIS MAY REDUCED TO NOT LESS THAN 1/300 IF: (1) OPENING ARE PROVIDED IN THE UPPER AN LOWER PORTIONS OF THE VENTILATED SPACE, OR (2) A PERM VAPOR BARRIER IS INSTALLED ON THE WARM SIDE OF THE CEILING. IAW IRC SEC R806.1 (REFERENCE DETAIL 4/A-1A)

ROOFING MATERIALS REQUIRE AN ICE BARRIER THAT EXTENDS FROM THE EDGE OF THE EAVES TO A POINT NOT LESS THAN 24 INCHES INSIDE THE EXTERIOR WALL LINE OF THE BUILDING. IAW IRC R905. (REFRENCE DETAIL 5/A-1A)

4 ATTIC VENTILATION DETAIL
NOT TO SCALE

5

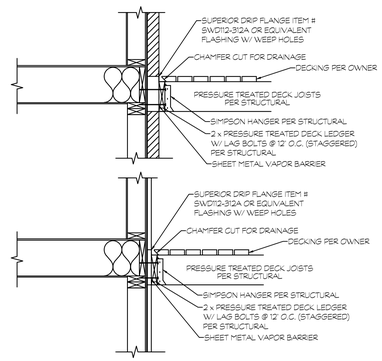


6 GENERAL DECK DETAILS
NOT TO SCALE

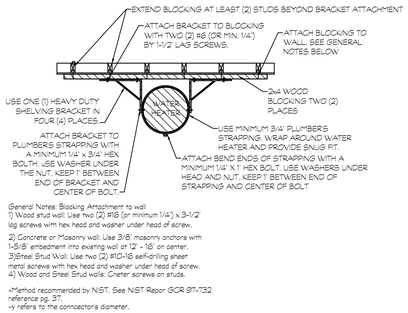


7 WATER HEATER BRACING
NOT TO SCALE

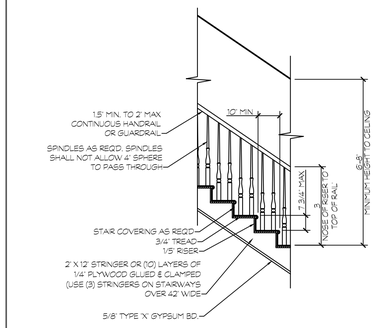


8 GENERAL STAIR AND RAILING DETAIL
NOT TO SCALE

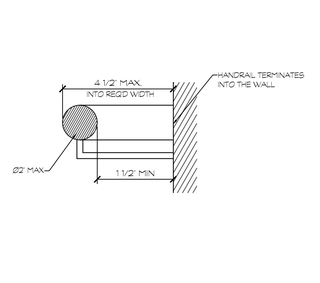


9 HANDRAIL DETAIL
NOT TO SCALE

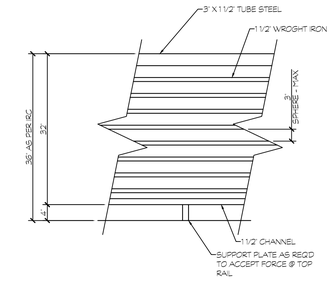


10 MODERN RAILING DETAIL
NOT TO SCALE

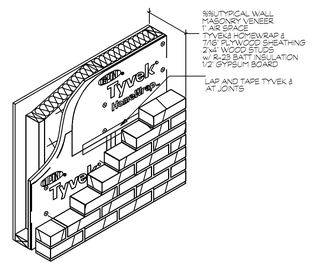


11 TYPICAL WALL ISOMETRIC - MASONRY
NOT TO SCALE

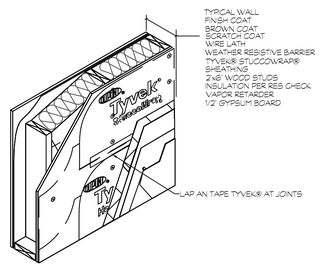


12 TYPICAL WALL ISOMETRIC
NOT TO SCALE

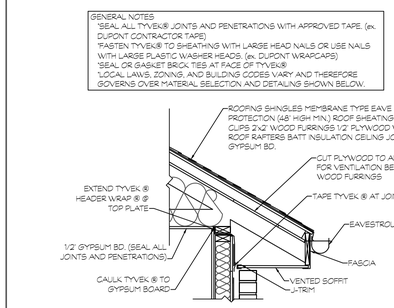


13 GENERAL ROOF/WALL INTERFACE DETAIL
NOT TO SCALE

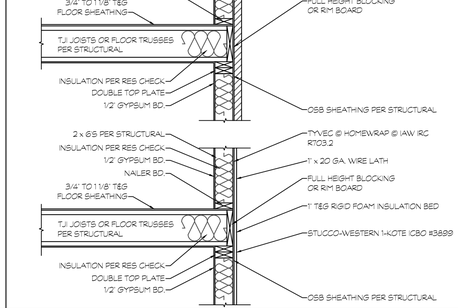


14 SECOND FLOOR DETAILS
NOT TO SCALE

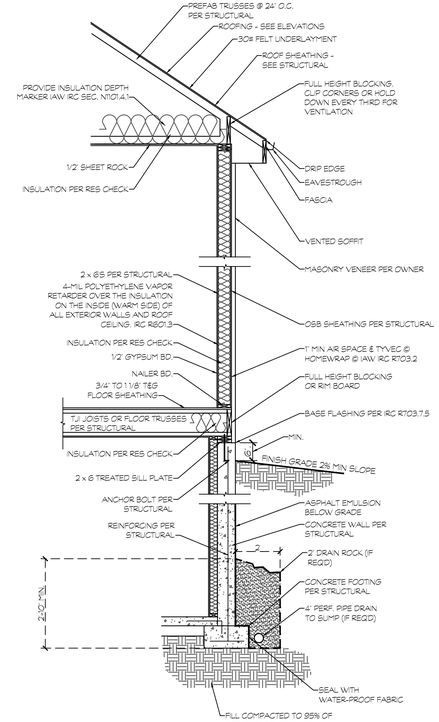


18 TYPICAL WALL SECTION
NOT TO SCALE - PERIMETER DRAIN SHOW (USE ONLY WHEN REQUIRED)

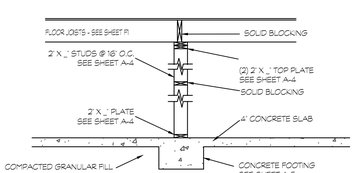


15 BEARING WALL DETAIL
NOT TO SCALE

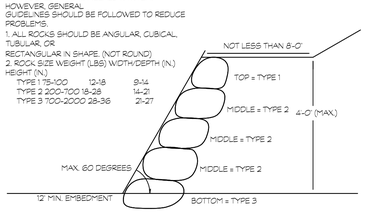


16 GENERAL ROCK RETAINING DETAIL
NOT TO SCALE

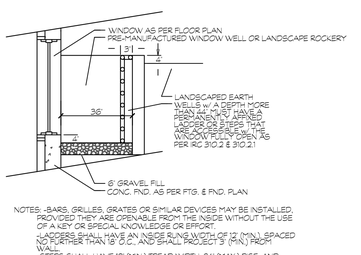


NOTES: -BARS, GRILLES, GRATES OR SIMILAR DEVICES MAY BE INSTALLED, PROVIDED THEY ARE OPENABLE FROM THE INSIDE WITHOUT THE USE OF A KEY OR SPECIAL KNOWLEDGE OR EFFORT.
-LADDERS SHALL HAVE AN INSIDE RUNG WIDTH OF 12" (MIN.) SPACED NO FURTHER THAN 18" O.C. AND SHALL PROJECT 3" (MIN.) FROM WALL.
-STEPS SHALL HAVE 12" (MIN.) TREAD WIDTH, 24" (MAX.) RISE, AND SHALL NOT ENCROACH INTO REQUIRED DIMENSION OF WINDOW WELL BY MORE THAN 6"
-WINDOW WELL MUST EXTEND 8" BEYOND EACH SIDE OF THE WINDOW
-WINDOW WELLS LOCATED UNDER A DECK OR PORCH MUST HAVE A CLEAR PATH TO SAFETY NOT LESS THAN 36" IN HEIGHT.

17 GENERAL WINDOW WELL DETAIL
NOT TO SCALE

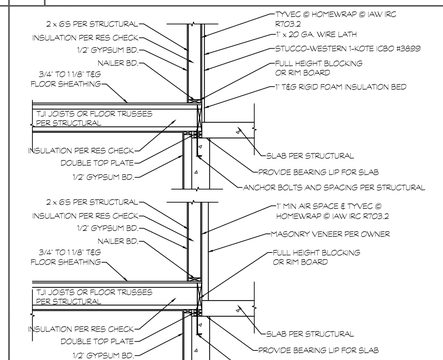


18 MAIN FLOOR (SUSPENDED SLAB) DETAILS
NOT TO SCALE

REVISIONS

DRIFTWOOD HOME DESIGN
PH. 801-857-9633 | WWW.DRIFTWOODPLANS.COM

DESIGNED FOR:
CARROLL RESIDENCE
WILLOW CANYON SUBDIVISION, PLAT2B, LOT 30, ALPINE, UTAH

DATE: 3-1-2021
SCALE: AS NOTED
DRAWN BY: JAC
FILE NAME: 20-031

SECTION DETAILS
A4.2

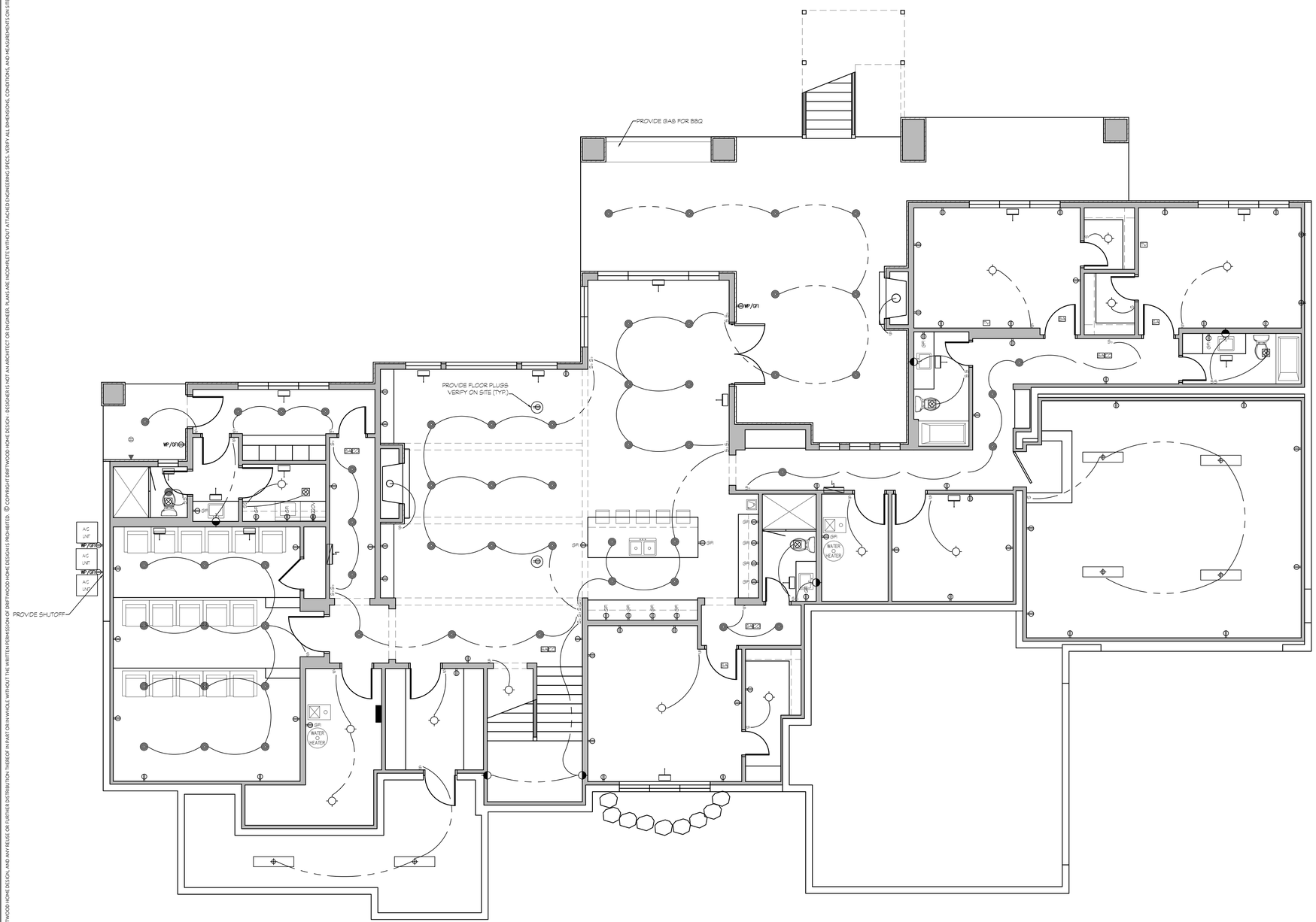


1 E1.1 BASEMENT ELECTRICAL

SCALE: 3/16" = 1'-0" SQ. FT. N/A

NOTES:

1. ALL ELECTRICAL FIXTURES AND THEIR PLACEMENTS ARE TO BE VERIFIED WITH HOME OWNER PRIOR TO INSTALLATION.
6. ELECTRICAL IS SCHEMATIC ONLY. VERIFY WITH CONTRACTOR AND OWNER
7. SEE GENERAL ELECTRICAL AND MECHANICAL NOTES ON SHEET A0.3
8. ALL WORK SHALL BE IN STRICT ACCORDANCE WITH THE LATEST EDITION OF THE INTERNATIONAL RESIDENTIAL CODE, NATIONAL ELECTRICAL CODE AND ALL LOCAL CODES.
9. ALL RECEPTACLES AT KITCHEN, GARAGE, AND BATHROOM COUNTERTOPS, AT EXTERIOR GRADE LEVEL AND AT UNFINISHED BASEMENTS ARE TO BE GFCI.
10. WIRING WITHIN 6'-0" OF ATTIC ACCESS MUST HAVE LUMBER-GUARD STRIP.
11. COMBINATION ARC FAULT PROTECTION REQUIRED AT ALL BEDROOM LIGHTS, SWITCHES, SMOKE DETECTORS, AND RECEPTACLES.
12. RECESSED CAN LIGHTS ABOVE TUBS OR SHOWERS SHALL HAVE LENS GASKET.
13. ALL EXTERIOR OUTLETS TO HAVE APPROVED IN-USE COVERS.
14. ALL ELECTRICAL RECEPTACLES TO BE TAMPER-PROOF. IRC R4002.14
15. A SERVICE OUTLET MUST BE INSTALLED BY FURNACES.
16. UFER GROUND IS TO BE LOCATED AND VERIFIED ON SITE BY CONTRACTOR. IRC SEC. E3608.1.2 AND NEC 250.50
17. PROVIDE ELEC. PANEL PROPERLY SIZED BY ELECTRICAL CONTRACTOR. CONNECT GROUND WIRE TO ALL METAL PIPES OR CONCRETE ENCASED ELECTRODE. N.E.C. 250.50 (c)
18. BATHROOM EXHAUST FAN DUCTS MUST CONTINUE AND DISCHARGE DIRECTLY TO THE EXTERIOR OF THE STRUCTURE. IRC SEC. M1501.1
19. ALL BRANCH CIRCUIT THAT SUPPLY 125-VOLT, SINGLE PHASE,15- AND 20- AMPERE RECEPTACLE OUTLETS INSTALLED IN DWELLING UNIT BEDROOMS TO BE PROTECTED BY AN ARC - FAULT CIRCUIT INTERRUPTER.
20. IN THE KITCHEN, A MINIMUM OF TWO 20-AMPERE SMALL APPLIANCE BRANCH CIRCUITS SHALL SERVE ALL WALL AND FLOOR RECEPTACLE OUTLETS. E3901.3

## ELECTRICAL SYMBOLS

| | |
|---|---|
| | EXHAUST FAN |
| | CEILING FAN |
| | CEILING LIGHT |
| P.C. | PULL CHORD LIGHT |
| | WALL LIGHT |
| | RECESSED LIGHT |
| | FLUORESCENT LIGHT (BOX) |
| | TRACK LIGHT |
| | FLOOD LIGHT |
| 220 | 220V OUTLET |
| R | 220V OUTLET (RANGE) |
| WP/GFI | EXTERIOR GFI OUTLET |
| GFI | GFI OUTLET |
| GFI | EXTERIOR SOFFIT PLUG GFCI PROTECTED |
| | OUTLET |
| | SWITCH UPPER OUTLET |
| | PHONE |
| TV | T.V. |
| SA | SMOKE DETECTOR (WIRED IN SERIES) |
| CO | CARBON MANOXIDE AND SMOKE DETECTOR COMBINATION (1) AT EACH FLOOR LEVEL CENTRALLY LOCATED PER CODE & OUTSIDE OF SLEEPING AREAS IN IMMEDIATE VICINITY OF BEDROOMS. |
| | FLOOR OUTLET |
| | METER BASE |
| | ELECTRICAL PANEL - ELECTRICAL CONTRACTOR TO SPECIFY AMP RATING |
| | DOOR BELL SWITCH |
| | DOOR BELL CHIME |
| | MOTOR FOR JETTED TUB |

## HVAC SYMBOLS

| | |
|---|---|
| | WARM AIR REGISTER |
| | COLD AIR RETURN |
| T | THERMOSTAT |

REVISIONS

DRIFTWOOD HOME DESIGN
PH. 801-857-9633 | WWW.DRIFTWOODPLANS.COM

DESIGNED FOR:
CARROLL RESIDENCE
WILLOW CANYON SUBDIVISION, PLAT2B, LOT 30, ALPINE, UTAH

DATE: 3-1-2021
SCALE: AS NOTED
DRAWN BY: JAC
FILE NAME: 20-031

BASEMENT ELEC. PLAN
E1.1

THESE PLANS AND DOCUMENTS ARE THE PROPERTY OF DRIFTWOOD HOME DESIGN, AND ANY REUSE OR FURTHER DISTRIBUTION THEREOF IN PART OR IN WHOLE WITHOUT THE WRITTEN PERMISSION OF DRIFTWOOD HOME DESIGN IS PROHIBITED. © COPYRIGHT DRIFTWOOD HOME DESIGN - DESIGNER IS NOT AN ARCHITECT OR ENGINEER. PLANS ARE INCOMPLETE WITHOUT ATTACHED ENGINEERING SPECS. VERIFY ALL DIMENSIONS, CONDITIONS, AND MEASUREMENTS ON SITE PRIOR TO CONSTRUCTION.

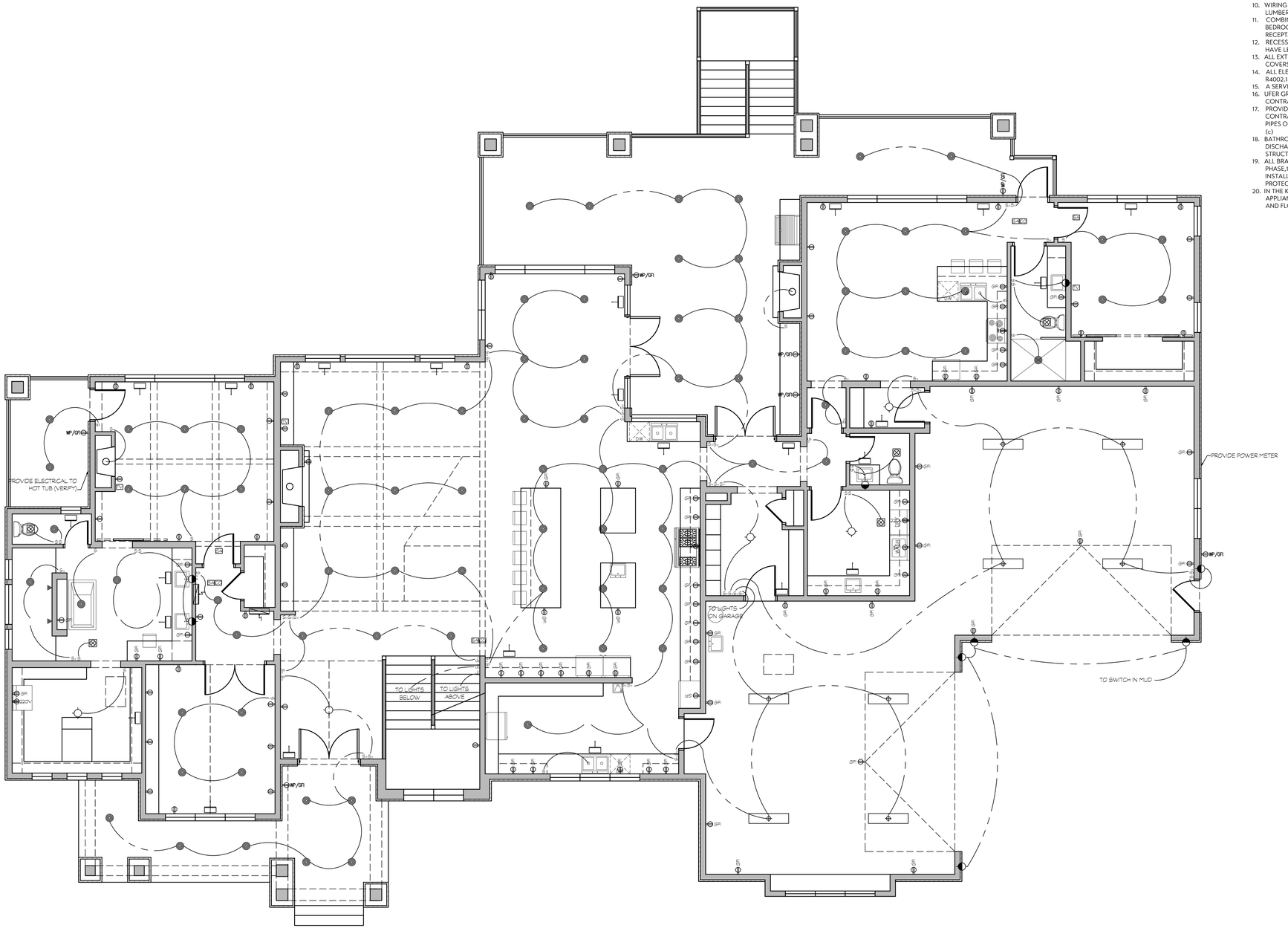


## NOTES:

1. ALL ELECTRICAL FIXTURES AND THEIR PLACEMENTS ARE TO BE VERIFIED WITH HOME OWNER PRIOR TO INSTALLATION.
6. ELECTRICAL IS SCHEMATIC ONLY. VERIFY WITH CONTRACTOR AND OWNER
7. SEE GENERAL ELECTRICAL AND MECHANICAL NOTES ON SHEET A0.3
8. ALL WORK SHALL BE IN STRICT ACCORDANCE WITH THE LATEST EDITION OF THE INTERNATIONAL RESIDENTIAL CODE, NATIONAL ELECTRICAL CODE AND ALL LOCAL CODES.
9. ALL RECEPTACLES AT KITCHEN, GARAGE, AND BATHROOM COUNTERTOPS, AT EXTERIOR GRADE LEVEL AND AT UNFINISHED BASEMENTS ARE TO BE GFCI.
10. WIRING WITHIN 6'-0" OF ATTIC ACCESS MUST HAVE LUMBER-GUARD STRIP.
11. COMBINATION ARC FAULT PROTECTION REQUIRED AT ALL BEDROOM LIGHTS, SWITCHES, SMOKE DETECTORS, AND RECEPTACLES.
12. RECESSED CAN LIGHTS ABOVE TUBS OR SHOWERS SHALL HAVE LENS GASKET.
13. ALL EXTERIOR OUTLETS TO HAVE APPROVED IN-USE COVERS.
14. ALL ELECTRICAL RECEPTACLES TO BE TAMPER-PROOF. IRC R4002.14
15. A SERVICE OUTLET MUST BE INSTALLED BY FURNACES.
16. UFER GROUND IS TO BE LOCATED AND VERIFIED ON SITE BY CONTRACTOR. IRC SEC. E3608.1.2 AND NEC 250.50
17. PROVIDE ELEC. PANEL PROPERLY SIZED BY ELECTRICAL CONTRACTOR. CONNECT GROUND WIRE TO ALL METAL PIPES OR CONCRETE ENCASED ELECTRODE. N.E.C. 250.50 (c)
18. BATHROOM EXHAUST FAN DUCTS MUST CONTINUE AND DISCHARGE DIRECTLY TO THE EXTERIOR OF THE STRUCTURE. IRC SEC. M1501.1
19. ALL BRANCH CIRCUIT THAT SUPPLY 125-VOLT, SINGLE PHASE,15- AND 20- AMPERE RECEPTACLE OUTLETS INSTALLED IN DWELLING UNIT BEDROOMS TO BE PROTECTED BY AN ARC - FAULT CIRCUIT INTERRUPTER.
20. IN THE KITCHEN, A MINIMUM OF TWO 20-AMPERE SMALL APPLIANCE BRANCH CIRCUITS SHALL SERVE ALL WALL AND FLOOR RECEPTACLE OUTLETS. E3901.3

## ELECTRICAL SYMBOLS

| | |
|---|---|
| | EXHAUST FAN |
| | CEILING FAN |
| | CEILING LIGHT |
| P.C. | PULL CHORD LIGHT |
| | WALL LIGHT |
| | RECESSED LIGHT |
| | FLUORESCENT LIGHT (BOX) |
| | TRACK LIGHT |
| | FLOOD LIGHT |
| 220 | 220V OUTLET |
| R | 220V OUTLET (RANGE) |
| WP/GFI | EXTERIOR GFI OUTLET |
| GFI | GFI OUTLET |
| S | EXTERIOR SOFFIT PLUG GFCI PROTECTED |
| | OUTLET |
| | SWITCH UPPER OUTLET |
| | PHONE |
| TV | T.V. |
| SA | SMOKE DETECTOR (WIRED IN SERIES) |
| CO | CARBON MANOXIDE AND SMOKE DETECTOR COMBINATION (1) AT EACH FLOOR LEVEL CENTRALLY LOCATED PER CODE & OUTSIDE OF SLEEPING AREAS IN IMMEDIATE VICINITY OF BEDROOMS. |
| | FLOOR OUTLET |
| | METER BASE |
| | ELECTRICAL PANEL - ELECTRICAL CONTRACTOR TO SPECIFY AMP RATING |
| | DOOR BELL SWITCH |
| | DOOR BELL CHIME |
| | MOTOR FOR JETTED TUB |

## HVAC SYMBOLS

| | |
|---|---|
| | WARM AIR REGISTER |
| | COLD AIR RETURN |
| T | THERMOSTAT |

# MAIN FLOOR ELECTRICAL

1 / E1.2

SCALE: 3/16" = 1'-0" SQ. FT. N/A

REVISIONS

DRIFTWOOD HOME DESIGN
PH. 801-857-9633 | WWW.DRIFTWOODPLANS.COM

DESIGNED FOR:

CARROLL RESIDENCE

WILLOW CANYON SUBDIVISION, PLAT2B, LOT 30, ALPINE, UTAH

DATE: 3-1-2021
SCALE: AS NOTED
DRAWN BY: JAC
FILE NAME: 20-031

MAIN FLOOR ELEC. PLAN
E1.2

THESE PLANS AND DOCUMENTS ARE THE PROPERTY OF DRIFTWOOD HOME DESIGN, AND ANY REUSE OR FURTHER DISTRIBUTION THEREOF IN PART OR IN WHOLE WITHOUT THE WRITTEN PERMISSION OF DRIFTWOOD HOME DESIGN IS PROHIBITED. © COPYRIGHT DRIFTWOOD HOME DESIGN - DESIGNER IS NOT AN ARCHITECT OR ENGINEER. PLANS ARE INCOMPLETE WITHOUT ATTACHED ENGINEERING SPECS. VERIFY ALL DIMENSIONS, CONDITIONS, AND MEASUREMENTS ON SITE PRIOR TO CONSTRUCTION.

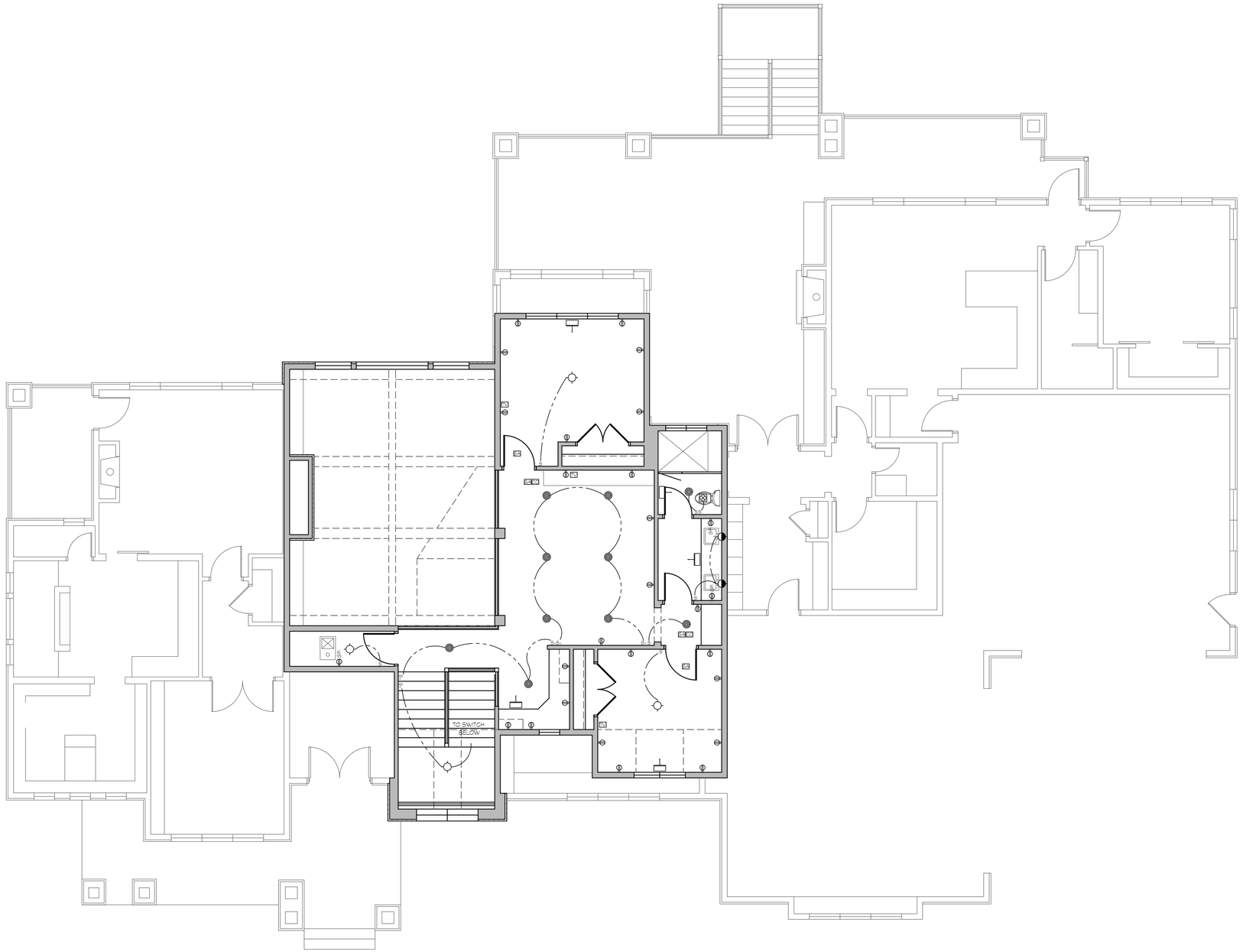


## ELECTRICAL SYMBOLS

| | |
|---|---|
| | EXHAUST FAN |
| | CEILING FAN |
| | CEILING LIGHT |
| P.C. | PULL CHORD LIGHT |
| | WALL LIGHT |
| | RECESSED LIGHT |
| | FLUORESCENT LIGHT (BOX) |
| | TRACK LIGHT |
| | FLOOD LIGHT |
| 220 | 220V OUTLET |
| R | 220V OUTLET (RANGE) |
| WP/GFI | EXTERIOR GFI OUTLET |
| GFI | GFI OUTLET |
| GFI | EXTERIOR SOFFIT PLUG GFCI PROTECTED |
| | OUTLET |
| | SWITCH UPPER OUTLET |
| | PHONE |
| TV | T.V. |
| SA | SMOKE DETECTOR (WIRED IN SERIES) |
| CO | CARBON MANOXIDE AND SMOKE DETECTOR COMBINATION (1) AT EACH FLOOR LEVEL CENTRALLY LOCATED PER CODE & OUTSIDE OF SLEEPING AREAS IN IMMEDIATE VICINITY OF BEDROOMS. |
| | FLOOR OUTLET |
| | METER BASE |
| | ELECTRICAL PANEL - ELECTRICAL CONTRACTOR TO SPECIFY AMP RATING |
| | DOOR BELL SWITCH |
| CH | DOOR BELL CHIME |
| | MOTOR FOR JETTED TUB |

## HVAC SYMBOLS

| | |
|---|---|
| | WARM AIR REGISTER |
| | COLD AIR RETURN |
| T | THERMOSTAT |

NOTES:

1. ALL ELECTRICAL FIXTURES AND THEIR PLACEMENTS ARE TO BE VERIFIED WITH HOME OWNER PRIOR TO INSTALLATION.
6. ELECTRICAL IS SCHEMATIC ONLY. VERIFY WITH CONTRACTOR AND OWNER
7. SEE GENERAL ELECTRICAL AND MECHANICAL NOTES ON SHEET A0.3
8. ALL WORK SHALL BE IN STRICT ACCORDANCE WITH THE LATEST EDITION OF THE INTERNATIONAL RESIDENTIAL CODE, NATIONAL ELECTRICAL CODE AND ALL LOCAL CODES.
9. ALL RECEPTACLES AT KITCHEN, GARAGE, AND BATHROOM COUNTERTOPS, AT EXTERIOR GRADE LEVEL AND AT UNFINISHED BASEMENTS ARE TO BE GFCI.
10. WIRING WITHIN 6'-0" OF ATTIC ACCESS MUST HAVE LUMBER-GUARD STRIP.
11. COMBINATION ARC FAULT PROTECTION REQUIRED AT ALL BEDROOM LIGHTS, SWITCHES, SMOKE DETECTORS, AND RECEPTACLES.
12. RECESSED CAN LIGHTS ABOVE TUBS OR SHOWERS SHALL HAVE LENS GASKET.
13. ALL EXTERIOR OUTLETS TO HAVE APPROVED IN-USE COVERS.
14. ALL ELECTRICAL RECEPTACLES TO BE TAMPER-PROOF. IRC R4002.14
15. A SERVICE OUTLET MUST BE INSTALLED BY FURNACES.
16. UFER GROUND IS TO BE LOCATED AND VERIFIED ON SITE BY CONTRACTOR. IRC SEC. E3608.1.2 AND NEC 250.50
17. PROVIDE ELEC. PANEL PROPERLY SIZED BY ELECTRICAL CONTRACTOR. CONNECT GROUND WIRE TO ALL METAL PIPES OR CONCRETE ENCASED ELECTRODE. N.E.C. 250.50 (c)
18. BATHROOM EXHAUST FAN DUCTS MUST CONTINUE AND DISCHARGE DIRECTLY TO THE EXTERIOR OF THE STRUCTURE, IRC SEC. M1501.1
19. ALL BRANCH CIRCUIT THAT SUPPLY 125-VOLT, SINGLE PHASE,15- AND 20- AMPERE RECEPTACLE OUTLETS INSTALLED IN DWELLING UNIT BEDROOMS TO BE PROTECTED BY AN ARC - FAULT CIRCUIT INTERRUPTER.
20. IN THE KITCHEN, A MINIMUM OF TWO 20-AMPERE SMALL APPLIANCE BRANCH CIRCUITS SHALL SERVE ALL WALL AND FLOOR RECEPTACLE OUTLETS. E3901.3

1 E1.3

# SECOND FLOOR ELECTRICAL

SCALE: 3/16" = 1'-0" SQ. FT. N/A

THESE PLANS AND DOCUMENTS ARE THE PROPERTY OF DRIFTWOOD HOME DESIGN, AND ANY REUSE OR FURTHER DISTRIBUTION THEREOF IN PART OR IN WHOLE WITHOUT THE WRITTEN PERMISSION OF DRIFTWOOD HOME DESIGN IS PROHIBITED. © COPYRIGHT DRIFTWOOD HOME DESIGN - DESIGNER IS NOT AN ARCHITECT OR ENGINEER. PLANS ARE INCOMPLETE WITHOUT ATTACHED ENGINEERING SPECS. VERIFY ALL DIMENSIONS, CONDITIONS, AND MEASUREMENTS ON SITE PRIOR TO CONSTRUCTION.

REVISIONS

DRIFTWOOD HOME DESIGN
PH. 801-857-9633 | WWW.DRIFTWOODPLANS.COM

DESIGNED FOR:

# CARROLL RESIDENCE

WILLOW CANYON SUBDIVISION, PLAT2B, LOT 30, ALPINE, UTAH

DATE: 3-1-2021
SCALE: AS NOTED
DRAWN BY: JAC
FILE NAME: 20-031

SECOND FLOOR ELEC. PLAN
E1.3

THESE PLANS AND DOCUMENTS ARE THE PROPERTY OF DRIFTWOOD HOME DESIGN - DESIGNER IS NOT AN ARCHITECT OR ENGINEER. PLANS ARE INCOMPLETE WITHOUT ATTACHED ENGINEERING SPECS. VERIFY ALL DIMENSIONS, CONDITIONS, AND MEASUREMENTS ON SITE PRIOR TO CONSTRUCTION. © COPYRIGHT DRIFTWOOD HOME DESIGN IS PROHIBITED.

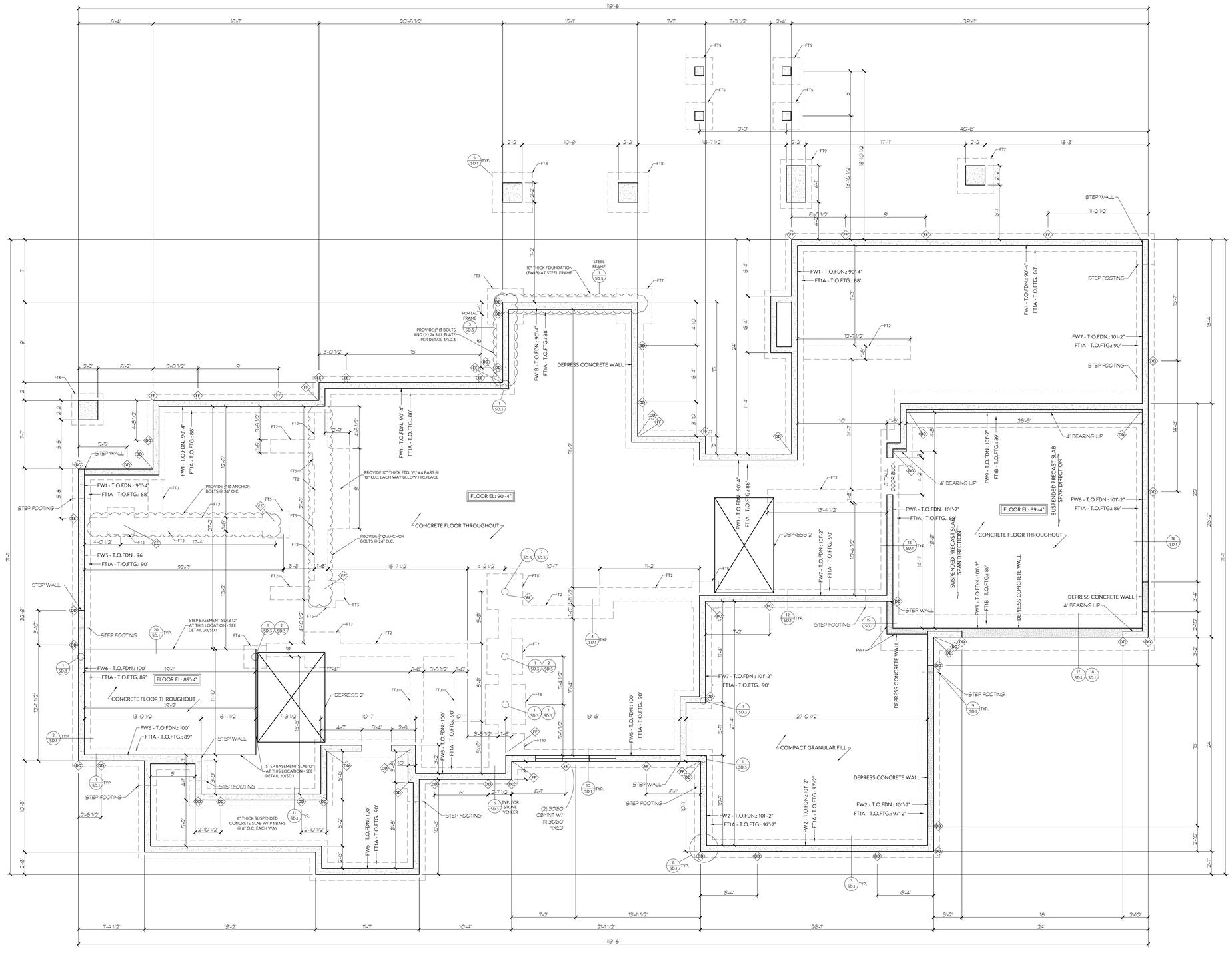


| FOOTING SCHEDULE | | | | | | | | | | | |
|---|---|---|---|---|---|---|---|---|---|---|---|
| MARK | WIDTH | LENGTH | DEPTH | CROSSWISE REBAR | | | | MARK | | | REMARKS |
| | | | | NO. | SIZE | LENGTH | SPACING | NO. | SIZE | LENGTH | SPACING | |
| FT1A | 24" | CONT. | 10" | | | | | 3 | #4 | CONT. | EQ. | - |
| FT1B | 48" | CONT. | 12" | - | #5 | 42" | 12" | 4 | #5 | CONT. | EQ. | - |
| FT2 | 18" | CONT. | 10" | | | | | 2 | #4 | CONT. | EQ. | SHOVEL |
| FT3 | 24" | 24" | 10" | 3 | #4 | 18" | EQ. | 3 | #4 | 18" | EQ. | SPOT |
| FT4 | 30" | 30" | 10" | 3 | #4 | 24" | EQ. | 3 | #4 | 24" | EQ. | - |
| FT5 | 36" | 36" | 10" | 4 | #4 | 30" | EQ. | 4 | #4 | 30" | EQ. | - |
| FT6 | 42" | 42" | 12" | 5 | #5 | 36" | EQ. | 5 | #5 | 36" | EQ. | - |
| FT7 | 48" | 48" | 12" | 5 | #5 | 42" | EQ. | 5 | #5 | 42" | EQ. | - |
| FT8 | 54" | 54" | 12" | 6 | #5 | 48" | EQ. | 6 | #5 | 48" | EQ. | - |
| FT9 | 42" | 66" | 12" | - | #5 | 36" | 12" | - | #5 | 60" | 12" | - |
| **FT10 | 48" | 48" | 16" | 5 | #5 | 42" | EQ. | 5 | #5 | 42" | EQ. | - |

** PROVIDE (2) MATS OF STEEL - (1) MAT IN TOP & BOTTOM 3" OF FOOTING

NOTES:
1. SEE GENERAL STRUCTURAL NOTES SHEET (SN.1) FOR TYPICAL FOOTING REQUIREMENTS
2. ALL FOOTINGS ARE TO BEAR BELOW THE FROST LINE OF THE LOCALITY (30" MIN. U.N.O.)
3. PROVIDE J-BARS TO MATCH VERTICAL WALL REINFORCEMENT
4. CONTINUOUS FOOTINGS SHALL BE CENTERED UNDER WALLS AND SPOT FOOTINGS SHALL BE CENTERED UNDER COLUMNS (U.N.O.)

| FOUNDATION WALL SCHEDULE | | | | | | | | |
|---|---|---|---|---|---|---|---|---|
| MARK | WIDTH | HEIGHT | VERTICAL REBAR | | | HORIZONTAL REBAR | | |
| | | | SIZE | GRADE | SPACING | SIZE | GRADE | SPACING |
| FW1 | 8" | 28" | #4 | 60 | 24" | #4 | 60 | (3) #4 |
| FW1B | 10" | 28" | #4 | 60 | 24" | #4 | 60 | (3) #4 |
| FW2 | 8" | 48" | #4 | 60 | 24" | #4 | 60 | (4) #4 |
| FW3 | 8" | 72" | #4 | 60 | 24" | #4 | 60 | (5) #4 |
| FW4 | 8" | 116" | #4 | 60 | 6" | #4 | 60 | 12" |
| FW5 | 8" | 120" | #4 | 60 | 6" | #4 | 60 | 12" |
| FW6 | 8" | 11'-0" | #5 | 60 | 6" | #5 | 60 | 12" |
| FW7 | 8" | 11'-2" | #5 | 60 | 6" | #5 | 60 | 12" |
| FW8 | 8" | 12'-2" | #5 | 60 | 5" | #5 | 60 | 10" |
| *FW9 | 12" | 12'-2" | #5 | 60 | 12" | #5 | 60 | 16" |

*PROVIDE (2) MATS OF STEEL - (1) MAT IN EACH FACE OF WALL W/ 2" SIDE CLEARANCE

NOTES:
1. SEE GENERAL STRUCTURAL NOTES SHEET (SN.1) FOR TYPICAL FOUNDATION WALL REQUIREMENTS.
2. PLACE REINFORCEMENT IN CENTER OF WALL OR NEAR EACH FACE, PER PLANS (U.N.O.)
3. PLACE TOP AND BOTTOM REINFORCEMENT WITHIN 4" OF TOP AND BOTTOM OF WALL.

| ANCHOR BOLT SCHEDULE |
|---|
| USE ∅" ANCHOR BOLTS @ 32" O.C. (U.N.O.) W/ 3"x3"x∅" PLATE WASHERS. EMBED 7" MIN. INTO TOP OF FOUNDATION WALL. |

| HOLDOWN AND STRAP SCHEDULE | | | |
|---|---|---|---|
| DESIGNATION | HOLDOWN OR STRAP | MIN. STUDS | DETAIL |
| AA | MST60 | 2 | 5 / SD.3 |
| BB | CMST12 | 2 | 5 / SD.3 |
| CC | HDU2 | 2 | 16 / SD.3 |
| DD | STHD14/14RJ | 2 | 6 / SD.1 |
| EE | HDU5 | 2 | 14 OR 15 / SD.1 |
| FF | HDQ8 | 3 | 14 OR 15 / SD.1 |

NOTE:
HOLDOWNS ARE DIMENSIONED TO FINISHED EDGE OF WINDOWS AND DOORS. ADJUST HOLDOWN PLACEMENT AS REQUIRED SO THAT HOLDOWN IS LOCATED ON KING STUDS, AS PER ENGINEERING SPECS. HOLDOWN DIMENSIONS ARE APPROXIMATIONS - CONTRACTOR TO VERIFY.

## CONCRETE SCHEDULE

| | |
|---|---|
| | CONCRETE FOUNDATION WALL (SEE ENGINEERING SPECS) |
| | DEPRESSED CONCRETE FOUNDATION WALL (SEE ENGINEERING SPECS) |

STATE OF UTAH
DANIEL S. URQUHART
No. 10188152
DATE: 3-2-21
PROFESSIONAL ENGINEER

# 1 S1.1 FOOTINGS AND FOUNDATION

SCALE: 3/16" = 1'-0" SQ. FT. N/A

REVISIONS

DRIFTWOOD HOME DESIGN
PH. 801-857-9633 | WWW.DRIFTWOODPLANS.COM

DESIGNED FOR:
CARROLL RESIDENCE
WILLOW CANYON SUBDIVISION, PLAT2B, LOT 30, ALPINE, UTAH

DATE: 3-1-2021
SCALE: AS NOTED
DRAWN BY: JAC
FILE NAME: 20-031

FOOTINGS & FOUNDATION
S1.1

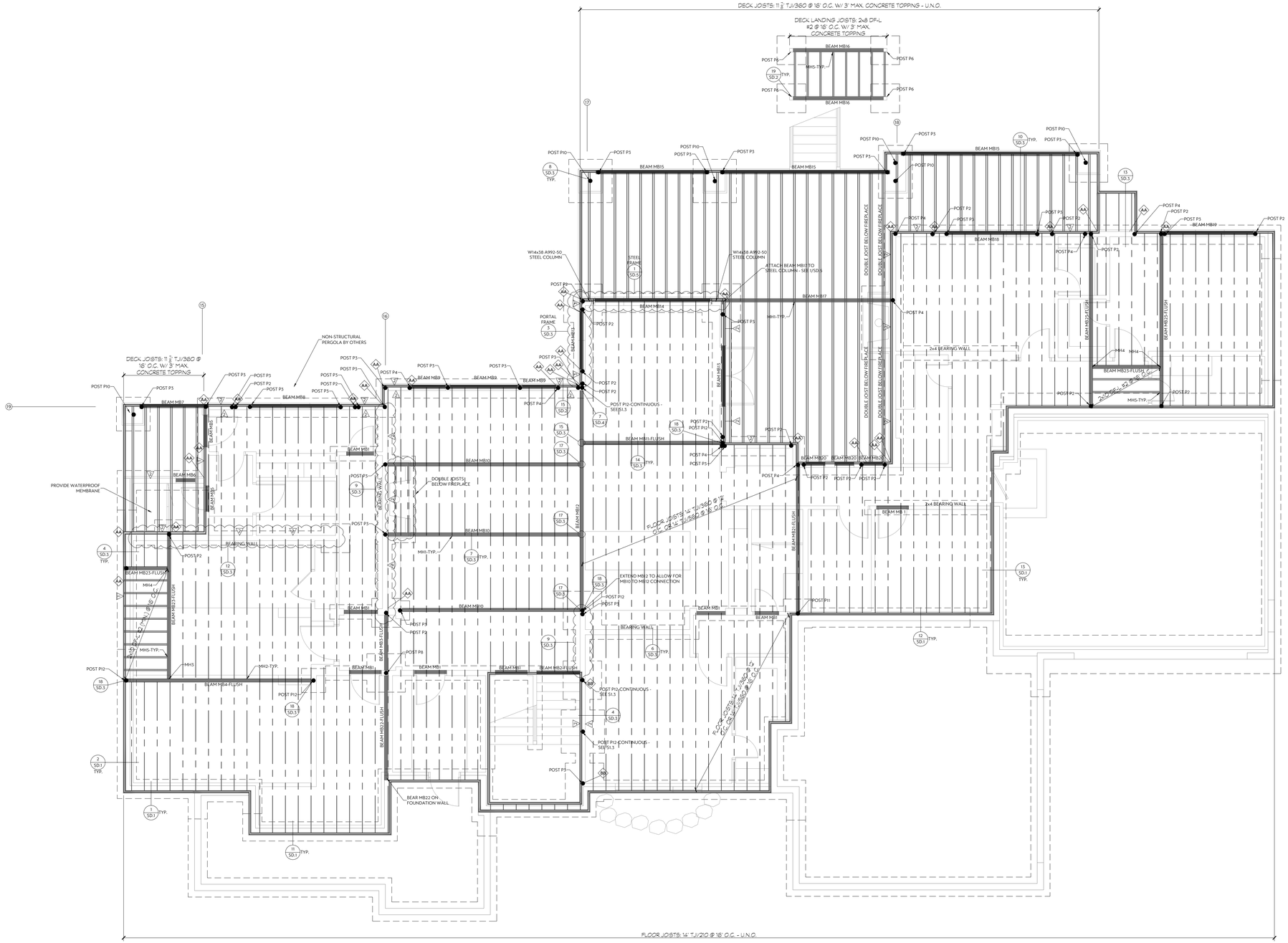


## FRAMING SCHEDULE

| | |
|---|---|
| _____ – – _____ | TJI/210 14" FLOOR JOISTS (SEE ENGINEERING SPECS) |

# 1 S1.2 MAIN FLOOR FRAMING

SCALE: 3/16" = 1'-0" SQ. FT. N/A

| BEAM SCHEDULE | |
|---|---|
| DESIGNATION | SIZE |
| MB1 | (2) 2x8 DF-L #2 |
| MB2 | (2) 14" LVL |
| *MB3 | (3) 14" LVL |
| **MB4 | W12x35 A992-50 STEEL |
| MB5 | (2) 2x8 DF-L #2 |
| MB6 | (2) 2x10 DF-L #2 |
| MB7 | 5 1/4" x 10 7/8" GULAM |
| MB8 | (3) 9 1/4" LVL |
| MB9 | (2) 2x10 DF-L #2 |
| MB10 | 5 1/4" x 19 1/2" GULAM |
| **MB11 | W12x22 A992-50 STEEL |
| **MB12 | W18x40 A992-50 STEEL |
| MB13 | (2) 11 7/8" LVL |
| MB14 | W8x28 A992-50 STEEL |
| MB15 | 6 3/4" x 19 1/2" GULAM |
| MB16 | 5 1/4" x 10 1/2" GULAM |
| MB17 | 6 3/4" x 22 1/2" GULAM |
| MB18 | (2) 11 7/8" LVL |
| MB19 | (3) 9 1/4" LVL |
| MB20 | (2) 9 1/4" LVL |
| MB21 | 7" x 14" PARALLAM |
| *MB22 | (3) 14" LVL |
| MB23 | (2) 14" LVL |

* ATTACH LAMINATIONS TOGETHER W/ (2) ROWS OF 3"x 3 1/2" SDS SCREWS @ 16" O.C. - EACH SIDE
** PROVIDE 2x NAILER W/ 1/2" Ø BOLTS @ 24" O.C. - ALTERNATING

| POST SCHEDULE | |
|---|---|
| DESIGNATION | SIZE |
| P1 | ONE TRIMMER/STUD |
| P2 | TWO TRIMMERS/STUDS |
| P3 | THREE TRIMMERS/STUDS |
| P4 | FOUR TRIMMERS/STUDS |
| P5 | 4x4 DF-L #2 POST |
| P6 | 6x6 DF-L #2 POST |
| P7 | 3 1/2"x5 1/4" PARALLAM |
| P8 | 5 1/4"x5 1/4" PARALLAM |
| P9 | 12x12 DF-L #2 POST |
| P10 | 14x14 DF-L #2 POST |
| P11 | 3 1/2"x7" PARALLAM |
| P12 | HSS 5x5x1/2 STEEL TUBE |

NOTES:
1. SEE GENERAL STRUCTURAL NOTES SHEET (SN.1) FOR TYPICAL BEARING POST REQUIREMENTS.
2. POSTS INDICATE NUMBER OF TRIMMERS WHEN SPECIFIED AS HEADERS. ALL OTHER POST DESIGNATIONS REFER TO FULL HEIGHT KING STUDS.
3. INSTALL (2) TRIMMERS (MIN.) EACH SIDE OF HEADER GREATER THAN 6'-0" IN LENGTH.
4. INSTALL (2) KING STUDS (MIN.) EACH SIDE OF HEADER ON OPENINGS GREATER THAN 4'-0". SEE SHEET S.N.1 FOR MIN. KING STUD REQUIREMENTS.
5. INSTALL (2) KING STUDS (MIN.) AT ALL HOLDOWN LOCATIONS OR AS NOTED ON HOLDOWN SCHEDULE. (U.N.O.)

| BEAM HANGER SCHEDULE | | |
|---|---|---|
| DESIGNATION | MODEL | NOTES |
| MH1 | IUS | - |
| MH2 | ITS | - |
| MH3 | MIT414 | - |
| MH4 | U414 | - |
| MH5 | LUS | - |

| FLOOR SHEATHING SCHEDULE | | |
|---|---|---|
| MATERIAL | 8d NAILS SPACING | |
| | EDGE | FIELD |
| 3/4" T&G STRUCTURAL II PLYWOOD OR OSB | 6" | 12" |

| WALL FRAMING SCHEDULE |
|---|
| ALL EXTERIOR BEARING WALLS TO BE 2x6 DF-L STUDS @ 16" O.C. - U.N.O. |
| ALL INTERIOR BEARING WALLS TO BE 2x6 DF-L STUDS @ 16" O.C. - U.N.O. |

| TOP PLATE SPLICE SCHEDULE |
|---|
| USE (12) 16d NAILS ON TOP PLATE SPLICES - SEE DETAIL 3 / SD.2 |

| HOLDOWN AND STRAP SCHEDULE | | | |
|---|---|---|---|
| DESIGNATION | HOLDOWN OR STRAP | MIN. STUDS | DETAIL |
| AA | MST60 | 2 | 5 / SD.3 |
| BB | CMST12 | 2 | 5 / SD.3 |
| CC | HDU2 | 2 | 16 / SD.3 |
| DD | STHD14/14RJ | 2 | 6 / SD.1 |
| EE | HDU5 | 2 | 14 OR 15 / SD.1 |
| FF | HDQ8 | 3 | 14 OR 15 / SD.1 |

NOTE:
HOLDOWNS ARE DIMENSIONED TO FINISHED EDGE OF WINDOWS AND DOORS. ADJUST HOLDOWN PLACEMENT AS REQUIRED SO THAT HOLDOWN IS LOCATED ON KING STUDS, AS PER ENGINEERING SPECS. HOLDOWN DIMENSIONS ARE APPROXIMATIONS - CONTRACTOR TO VERIFY.

| SHEAR WALL SCHEDULE | | | | | |
|---|---|---|---|---|---|
| DESIGNATION | MATERIAL | 8d NAILS SPACING | | 1½" 16 GA. STAPLES | |
| | | EDGE | FIELD | EDGE | FIELD |
| 1 | 7/16" STRUCTURAL II PLYWOOD OR OSB | 6" | 6" (12") | 4" | 6" |
| 2 | 7/16" STRUCTURAL II PLYWOOD OR OSB | 4" | 6" (12") | 2½" | 6" |
| 3 | 7/16" STRUCTURAL II PLYWOOD OR OSB | 3" | 6" (12") | N/A | N/A |
| 4 | 7/16" STRUCTURAL II PLYWOOD OR OSB | 2" | 6" (12") | N/A | N/A |

NOTES:
1. FIELD NAILING IS TO BE 12" O.C. WHEN STUD SPACING IS 16" O.C. OR LESS.
2. ALL SHEAR WALLS ARE BLOCKED AT ALL FREE EDGES W/ STUD FRAMING AT 24" O.C. U.N.O.
3. ALL ANCHOR BOLTS SHALL BE PER ASTM A307 AND HAVE 7" MIN. EMBEDMENT.
4. WHERE SHEAR WALL PANELS ARE APPLIED TO BOTH FACES OF A WALL, PANEL JOINTS SHALL BE OFFSET TO FALL ON DIFFERENT FRAMING MEMBERS.
5. FOR SHEAR WALLS "SW3" AND "SW4", ABUTTING PANEL EDGES ARE TO HAVE (2) 2x_ STUDS STITCHED TOGETHER W/ 16d SINKERS @ 6" O.C.

STATE OF UTAH
DANIEL S. URQUHART
No. 10188152
DATE: 3-2-21
PROFESSIONAL ENGINEER

REVISIONS

DRIFTWOOD HOME DESIGN
PH. 801-857-9633 | WWW.DRIFTWOODPLANS.COM

DESIGNED FOR:
CARROLL RESIDENCE
WILLOW CANYON SUBDIVISION, PLAT2B, LOT 30, ALPINE, UTAH

DATE: 3-1-2021
SCALE: AS NOTED
DRAWN BY: JAC
FILE NAME: 20-031

MAIN FLOOR FRAMING PLAN
S1.2

THESE PLANS AND DOCUMENTS ARE THE PROPERTY OF DRIFTWOOD HOME DESIGN, AND ANY RELIDE OR FURTHER DISTRIBUTION THEREOF IN PART OR IN WHOLE WITHOUT THE WRITTEN PERMISSION OF DRIFTWOOD HOME DESIGN IS PROHIBITED. © COPYRIGHT DRIFTWOOD HOME DESIGN - DESIGNER IS NOT AN ARCHITECT OR ENGINEER. PLANS ARE INCOMPLETE WITHOUT ATTACHED ENGINEERING SPECS. VERIFY ALL DIMENSIONS, CONDITIONS, AND MEASUREMENTS ON SITE PRIOR TO CONSTRUCTION.

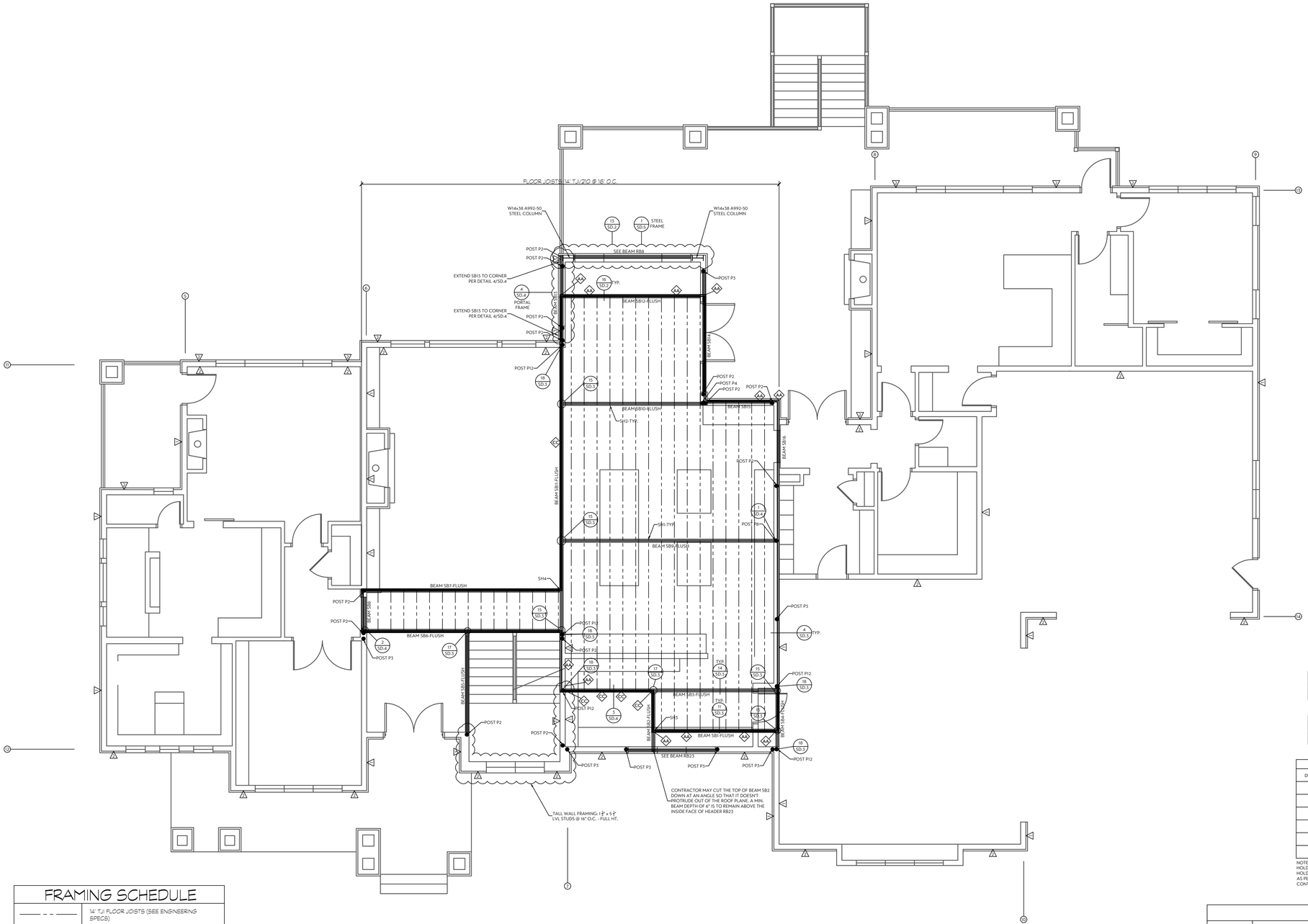


## FRAMING SCHEDULE

| | |
|---|---|
| - - - | 14" TJI FLOOR JOISTS (SEE ENGINEERING SPECS) |
| ═══ | GIRDER TRUSS (SEE ENGINEERING SPECS) |

1 S1.3

# SECOND FLOOR FRAMING

SCALE: 3/16" = 1'-0" SQ. FT. N/A

| BEAM SCHEDULE | |
|---|---|
| DESIGNATION | SIZE |
| SB1 | (2) 14" LVL |
| SB2 | (2) 14" LVL |
| *SB3 | W12x87 A992-50 STEEL |
| *SB4 | W12x53 A992-50 STEEL |
| SB5 | (2) 14" LVL |
| *SB6 | W12x65 A992-50 STEEL |
| SB7 | (2) 14" LVL |
| SB8 | (3) 9 1/4" LVL |
| *SB9 | W12x58 A992-50 STEEL |
| SB10 | 7" x 14" PARALLAM |
| *SB11 | W18x46 A992-50 STEEL |
| SB12 | 7" x 14" PARALLAM |
| SB13 | (3) 11 7/8" LVL |
| SB14 | (3) 14" LVL |
| SB15 | (2) 9 1/4" LVL |
| SB16 | (2) 2x10 DF-L #2 |

* PROVIDE 2x NAILER W/ 1/2" Ø BOLTS @ 24" O.C. - ALTERNATING

| POST SCHEDULE | |
|---|---|
| DESIGNATION | SIZE |
| P1 | ONE TRIMMER/STUD |
| P2 | TWO TRIMMERS/STUDS |
| P3 | THREE TRIMMERS/STUDS |
| P4 | FOUR TRIMMERS/STUDS |
| P5 | 4x4 DF-L #2 POST |
| P6 | 6x6 DF-L #2 POST |
| P7 | 3 1/2"x5 1/2" PARALLAM |
| P8 | 5 1/2"x5 1/2" PARALLAM |
| P9 | 12x12 DF-L #2 POST |
| P10 | 14x14 DF-L #2 POST |
| P11 | 3 1/2"x7" PARALLAM |
| P12 | HSS 5x5x1/2 STEEL TUBE |

NOTES:
1. SEE GENERAL STRUCTURAL NOTES SHEET (SN.1) FOR TYPICAL BEARING POST REQUIREMENTS.
2. POSTS INDICATE NUMBER OF TRIMMERS WHEN SPECIFIED AS HEADERS. ALL OTHER POST DESIGNATIONS REFER TO FULL HEIGHT KING STUDS.
3. INSTALL (2) TRIMMERS (MIN.) EACH SIDE OF HEADER GREATER THAN 6'-0" IN LENGTH.
4. INSTALL (2) KING STUDS (MIN.) EACH SIDE OF HEADER ON OPENINGS GREATER THAN 4'-0". SEE SHEET SN.1 FOR MIN. KING STUD REQUIREMENTS.
5. INSTALL (2) KING STUDS (MIN.) AT ALL HOLDOWN LOCATIONS OR AS NOTED ON HOLDOWN SCHEDULE. (U.N.O.)

| BEAM HANGER SCHEDULE | | |
|---|---|---|
| DESIGNATION | MODEL | NOTES |
| SH1 | ITS | - |
| SH2 | IUS | - |
| SH3 | HHUS410 | - |
| SH4 | THA22 | - |

| FLOOR SHEATHING SCHEDULE | | |
|---|---|---|
| MATERIAL | 8d NAILS SPACING | |
| | EDGE | FIELD |
| 3/4" T&G STRUCTURAL II PLYWOOD OR OSB | 6" | 12" |

| WALL FRAMING SCHEDULE |
|---|
| ALL EXTERIOR BEARING WALLS TO BE 2x6 DF-L STUDS @ 16" O.C. - U.N.O. |

| TOP PLATE SPLICE SCHEDULE |
|---|
| USE (12) 16d NAILS ON TOP PLATE SPLICES - SEE DETAIL 3 / SD.2 |

| HOLDOWN AND STRAP SCHEDULE | | | |
|---|---|---|---|
| DESIGNATION | HOLDOWN OR STRAP | MIN. STUDS | DETAIL |
| AA | MST60 | 2 | 5 / SD.3 |
| BB | CMST12 | 2 | 5 / SD.3 |
| CC | HDU2 | 2 | 16 / SD.3 |
| DD | STHD14/14RJ | 2 | 6 / SD.1 |
| EE | HDU5 | 2 | 14 OR 15 / SD.1 |
| FF | HDQ8 | 3 | 14 OR 15 / SD.1 |

NOTE:
HOLDOWNS ARE DIMENSIONED TO FINISHED EDGE OF WINDOWS AND DOORS. ADJUST HOLDOWN PLACEMENT AS REQUIRED SO THAT HOLDOWN IS LOCATED ON KING STUDS, AS PER ENGINEERING SPECS. HOLDOWN DIMENSIONS ARE APPROXIMATIONS - CONTRACTOR TO VERIFY.

| SHEAR WALL SCHEDULE | | | | | |
|---|---|---|---|---|---|
| DESIGNATION | MATERIAL | 8d NAILS SPACING | | 1/2" 16 GA. STAPLES | |
| | | EDGE | FIELD | EDGE | FIELD |
| 1 | 3/8" STRUCTURAL II PLYWOOD OR OSB | 6" | 6" (12") | 4" | 6" |
| 2 | 3/8" STRUCTURAL II PLYWOOD OR OSB | 4" | 6" (12") | 2 1/2" | 6" |
| 3 | 3/8" STRUCTURAL II PLYWOOD OR OSB | 3" | 6" (12") | N/A | N/A |
| 4 | 3/8" STRUCTURAL II PLYWOOD OR OSB | 2" | 6" (12") | N/A | N/A |

NOTES:
1. FIELD NAILING IS TO BE 12" O.C. WHEN STUD SPACING IS 16" O.C. OR LESS.
2. ALL SHEAR WALLS ARE BLOCKED AT ALL FREE EDGES W/ STUD FRAMING AT 24" O.C. U.N.O.
3. ALL ANCHOR BOLTS SHALL BE PER ASTM A307 AND HAVE 7" MIN. EMBEDMENT.
4. WHERE SHEAR WALL PANELS ARE APPLIED TO BOTH FACES OF A WALL, PANEL JOINTS SHALL BE OFFSET TO FALL ON DIFFERENT FRAMING MEMBERS.
5. FOR SHEAR WALLS "SW3" AND "SW4", ABUTTING PANEL EDGES ARE TO HAVE (2) 2x_ STUDS STITCHED TOGETHER W/ 16d SINKERS @ 6" O.C.

STATE OF UTAH
DANIEL S. URQUHART
No. 10188152
DATE: 3-2-21
PROFESSIONAL ENGINEER

REVISIONS

DRIFTWOOD HOME DESIGN
PH. 801-857-9633 | WWW.DRIFTWOODPLANS.COM

DESIGNED FOR:
CARROLL RESIDENCE
WILLOW CANYON SUBDIVISION, PLAT2B, LOT 30, ALPINE, UTAH

DATE: 3-1-2021
SCALE: AS NOTED
DRAWN BY: JAC
FILE NAME: 20-031

SECOND FLOOR FRAMING PLAN
S1.3

THESE PLANS AND DOCUMENTS ARE THE PROPERTY OF DRIFTWOOD HOME DESIGN - DESIGNER IS NOT AN ARCHITECT OR ENGINEER. PLANS ARE INCOMPLETE WITHOUT ATTACHED ENGINEERING SPECS. VERIFY ALL DIMENSIONS, CONDITIONS, AND MEASUREMENTS ON SITE PRIOR TO CONSTRUCTION. © COPYRIGHT DRIFTWOOD HOME DESIGN | REPRODUCTION IS PROHIBITED.

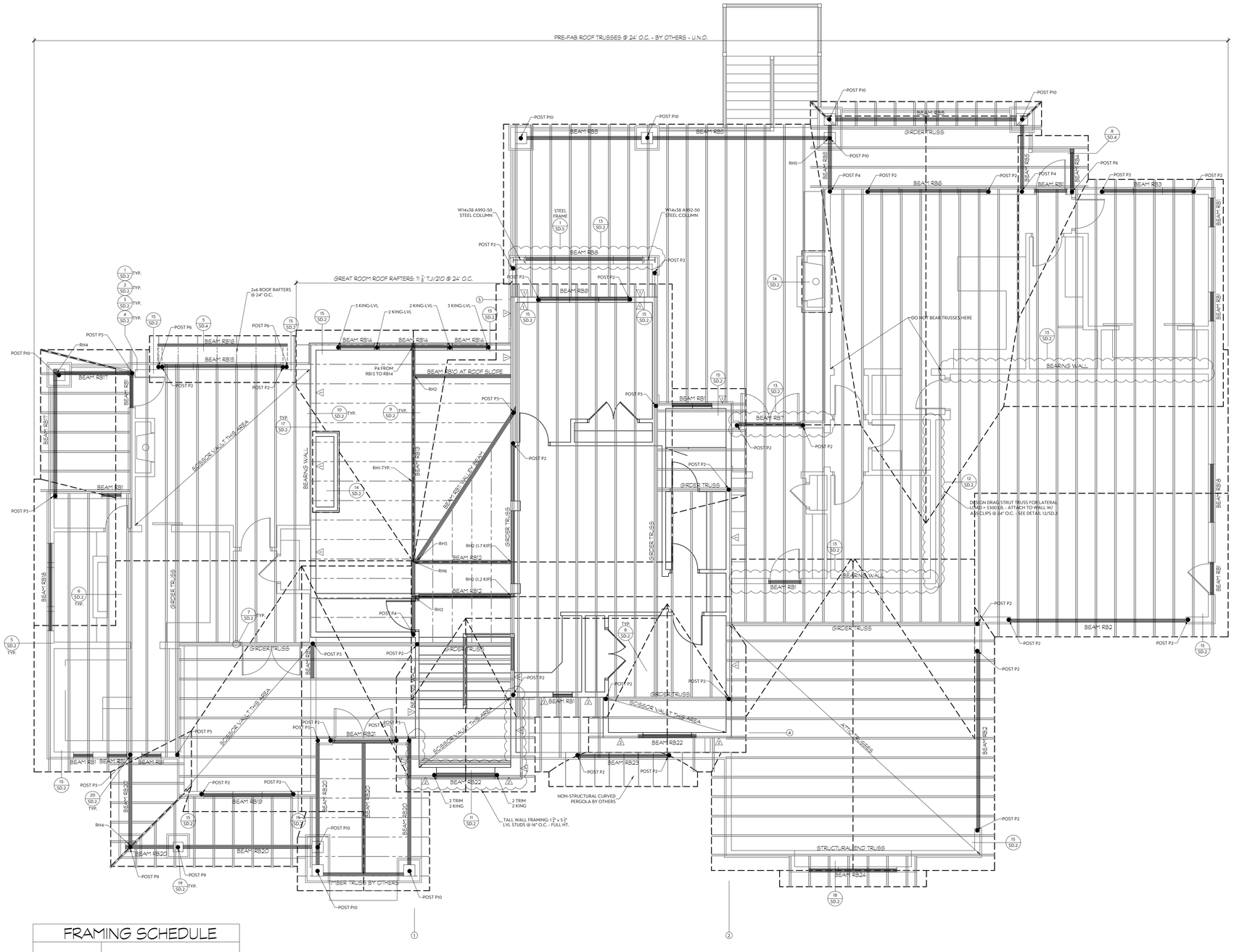


## FRAMING SCHEDULE

| | |
|---|---|
| | STICK FRAME (SEE ENGINEERING SPECS) |
| | PREFAB TRUSSES (SEE ENGINEERING SPECS |
| | PREFAB GIRDER TRUSS (SEE ENGINEERING SPECS |

## ROOF FRAMING NOTES

1. DETAILS ARE NOTED ON THE PLANS IN TYPICAL LOCATIONS AND SHALL BE REPEATED WHERE SIMILAR CONDITIONS EXIST. SEE TYPICAL DETAILS AND GENERAL NOTES.
2. SEE STRUCTURAL DETAIL SHEETS (xx/S.x) FOR STRUCTURAL NOTES AND GENERAL USE DETAILS.
3. SEE DESIGN PLANS FOR DIMENSIONS. DO NOT SCALE STRUCTURAL DRAWINGS.
4. SEE TRUSS NOTES FOR ROOF TRUSSES LOADING AND SPECIFICATIONS. SEE ROOF SHEATHING NOTES FOR ROOF SHEATHING SIZE AND NAILING.
5. COORDINATE ALL TRUSS CONFIGURATIONS W/ DESIGN PLANS. SEE ROOF TRUSS NOTES.
6. ALL TRUSS HANGERS TO BE SPECIFIED BY TRUSS MANUFACTURER.

## BEAM SCHEDULE

| DESIGNATION | SIZE |
|---|---|
| RB1 | (2) 2x8 DF-L #2 |
| RB2 | (3) 16" LVL |
| RB3 | (2) 9 1/4" LVL |
| RB4 | 6x8 DF-L #2 |
| RB5 | 6 3/4" x 15" GLULAM |
| RB6 | (3) 9 1/4" LVL |
| RB7 | (2) 9 1/4" LVL |
| RB8 | W18x28 A992-50 STEEL |
| RB9 | (3) 9 1/4" LVL |
| RB10 | (2) 11 7/8" LVL |
| RB11 | (2) 14" LVL |
| RB12 | (2) 16" LVL |
| RB13 | 6 3/4" x 19 7/8" GLULAM |
| RB14 | (2) 11 7/8" LVL |
| RB15 | (3) 11 7/8" LVL |
| RB16 | 4x8 DF-L #2 |
| RB17 | 5 1/4" x 9" GLULAM |
| RB18 | (2) 2x10 DF-L #2 |
| RB19 | (3) 9 1/4" LVL |
| RB20 | 5 1/4" x 10 1/2" GLULAM OR 6x12 DF-L #2 |
| RB21 | (3) 2x10 DF-L #2 |
| RB22 | (2) 2x8 DF-L #2 |
| RB23 | (3) 7 1/4" LVL |
| RB24 | (2) 2x10 DF-L #2 |

## POST SCHEDULE

| DESIGNATION | SIZE |
|---|---|
| P1 | ONE TRIMMER/STUD |
| P2 | TWO TRIMMERS/STUDS |
| P3 | THREE TRIMMERS/STUDS |
| P4 | FOUR TRIMMERS/STUDS |
| P5 | 4x4 DF-L #2 POST |
| P6 | 6x6 DF-L #2 POST |
| P7 | 3 1/2"x5 1/2" PARALLAM |
| P8 | 5 1/2"x5 1/2" PARALLAM |
| P9 | 12x12 DF-L #2 POST |
| P10 | 14x14 DF-L #2 POST |
| P11 | 3 1/2"x7" PARALLAM |
| P12 | HSS 5x5x1/4 STEEL TUBE |

NOTES:
1. SEE GENERAL STRUCTURAL NOTES SHEET (SN.1) FOR TYPICAL BEARING POST REQUIREMENTS.
2. POSTS INDICATE NUMBER OF TRIMMERS WHEN SPECIFIED AS HEADERS. ALL OTHER POST DESIGNATIONS REFER TO FULL HEIGHT KING STUDS.
3. INSTALL (2) TRIMMERS (MIN.) EACH SIDE OF HEADER GREATER THAN 6'-0" IN LENGTH.
4. INSTALL (2) KING STUDS (MIN.) EACH SIDE OF HEADER ON OPENINGS GREATER THAN 4'-0". SEE SHEET SN.1 FOR MIN. KING STUD REQUIREMENTS.
5. INSTALL (2) KING STUDS (MIN.) AT ALL HOLDOWN LOCATIONS OR AS NOTED ON HOLDOWN SCHEDULE. (U.N.O.)

## BEAM HANGER SCHEDULE

| DESIGNATION | MODEL | NOTES |
|---|---|---|
| RH1 | LSSR | - |
| RH2 | LSSR410Z | - |
| RH3 | HHUS410 | SLOPED & SKEWED |
| RH4 | HGLTS W/ OFFSET TOP FLANGE | - |
| RH5 | HGLT7 | - |
| RH6 | HU416-MIN. | - |

## ROOF SHEATHING SCHEDULE

| MATERIAL | 10d NAILS SPACING | |
|---|---|---|
| | EDGE | FIELD |
| 7/16" STRUCTURAL II PLYWOOD OR OSB | 6" | 12" |

## WALL FRAMING SCHEDULE

ALL EXTERIOR BEARING WALLS TO BE 2x6 DF-L STUDS @ 16" O.C. - U.N.O.

## TOP PLATE SPLICE SCHEDULE

USE (12) 16d NAILS ON TOP PLATE SPLICES - SEE DETAIL 3 / SD.2

## SHEAR WALL SCHEDULE

| DESIGNATION | MATERIAL | 8d NAILS SPACING | | 1/2" 16 GA. STAPLES | |
|---|---|---|---|---|---|
| | | EDGE | FIELD | EDGE | FIELD |
| 1 | 7/16" STRUCTURAL II PLYWOOD OR OSB | 6" | 6" (12") | 4" | 6" |
| 2 | 7/16" STRUCTURAL II PLYWOOD OR OSB | 4" | 6" (12") | 2 1/2" | 6" |
| 3 | 7/16" STRUCTURAL II PLYWOOD OR OSB | 3" | 6" (12") | N/A | N/A |
| 4 | 7/16" STRUCTURAL II PLYWOOD OR OSB | 2" | 6" (12") | N/A | N/A |

NOTES:
1. FIELD NAILING IS TO BE 12" O.C. WHEN STUD SPACING IS 16" O.C. OR LESS.
2. ALL SHEAR WALLS ARE BLOCKED AT ALL FREE EDGES W/ STUD FRAMING AT 24" O.C. U.N.O.
3. ALL ANCHOR BOLTS SHALL BE PER ASTM A307 AND HAVE 7" MIN. EMBEDMENT.
4. WHERE SHEAR WALL PANELS ARE APPLIED TO BOTH FACES OF A WALL, PANEL JOINTS SHALL BE OFFSET TO FALL ON DIFFERENT FRAMING MEMBERS.
5. FOR SHEAR WALLS "SW3" AND "SW4", ABUTTING PANEL EDGES ARE TO HAVE (2) 2x_ STUDS STITCHED TOGETHER W/ 16d SINKERS @ 6" O.C.

# 1 S1.4 ROOF FRAME PLAN

SCALE:3/16" = 1'-0" SQ. FT. N/A

THESE PLANS AND DOCUMENTS ARE THE PROPERTY OF DRIFTWOOD HOME DESIGN. DESIGNER IS NOT AN ARCHITECT OR ENGINEER. PLANS ARE INCOMPLETE WITHOUT ATTACHED ENGINEERING SPECS. VERIFY ALL DIMENSIONS, CONDITIONS, AND MEASUREMENTS ON SITE PRIOR TO CONSTRUCTION. © COPYRIGHT DRIFTWOOD HOME DESIGN IS PROHIBITED. DRIFTWOOD HOME DESIGN - DESIGNER IS NOT AN ARCHITECT OR ENGINEER. PLANS ARE INCOMPLETE WITHOUT ATTACHED ENGINEERING SPECS. VERIFY ALL DIMENSIONS, CONDITIONS, AND MEASUREMENTS ON SITE PRIOR TO CONSTRUCTION. © COPYRIGHT DRIFTWOOD HOME DESIGN IS PROHIBITED. THESE PLANS AND DOCUMENTS ARE THE PROPERTY OF DRIFTWOOD HOME DESIGN, AND ANY REUSE OR FURTHER DISTRIBUTION THEREOF IN PART OR IN WHOLE WITHOUT THE WRITTEN PERMISSION OF DRIFTWOOD HOME DESIGN IS PROHIBITED.

REVISIONS

DRIFTWOOD HOME DESIGN
PH. 801-857-9633 | WWW.DRIFTWOODPLANS.COM

DESIGNED FOR:

# CARROLL RESIDENCE

WILLOW CANYON SUBDIVISION, PLAT2B, LOT 30, ALPINE, UTAH

DATE: 3-1-2021
SCALE: AS NOTED
DRAWN BY: JAC
FILE NAME: 20-031

STATE OF UTAH
DANIEL S. URQUHART
No. 10188152
DATE: 3-2-21
PROFESSIONAL ENGINEER

ROOF FRAME PLAN
S1.4

## STRUCTURAL DESIGN CRITERIA

1. GOVERNING BUILDING CODE: 2018 INTERNATIONAL BUILDING CODE
2. ROOF LOADING
   - A. ROOF DEAD LOAD ..... 15.0 psf
   - B. ROOF LIVE LOAD ..... 20.0 psf
   - C. ROOF SNOW LOAD ..... 31.0 psf
     - GROUND SNOW LOAD, $P_g$ ..... 44.3 psf
     - FLAT ROOF SNOW LOAD, $P_f$ ..... 31.0 psf
     - SNOW EXP. FACTOR, $C_e$ ..... 1.0
     - THERMAL FACTOR, $C_t$ ..... 1.0
     - ROOF SLOPE FACTOR, $C_s$ ..... 1.0
     - IMPORTANCE FACTOR, I ..... 1.0
     - DRIFT SURCHARGE ..... AS NOTED ON PLANS
   - D. RAIN INTENSITY, i (in/hr) ..... 1.0
3. FLOOR LOADING
   - A. FLOOR DEAD LOAD ..... 15 psf
   - B. FLOOR LIVE LOAD ..... 40 psf
   - C. FLOOR LIVE LOAD (BALCONIES & DECKS) ..... 60 psf
4. WALL WEIGHT
   - A. WALL DEAD LOAD (FRAMING ONLY) ..... 10 psf
5. SEISMIC PARAMETERS
   - A. SEISMIC RISK CATEGORY ..... II
   - B. SEISMIC DESIGN CATEGORY ..... D
   - C. SPECTRAL RESPONSE ACCELERATIONS
     - $S_S$ ..... 1.37g
     - $S_1$ ..... 0.51g
     - $F_a$ ..... 1.20g
     - $F_v$ ..... 1.79g
     - $S_{MS}$ ..... 1.10g
     - $S_{D1}$ ..... 0.61g
   - D. SEISMIC FORCE RESISTING SYSTEM ..... PLYWOOD SHEAR WALLS
     - R ..... 6.5
     - $C_d$ ..... 4.0
     - $\Omega$ ..... 3.0
   - E. IMPORTANCE FACTOR, I ..... 1.0
   - F. DESIGN BASE SHEAR, V ..... 0.127*W
   - G. ANALYSIS PROCEDURE ..... EQUIVALENT LATERAL FORCE
6. WIND PARAMETERS
   - A. BASIC WIND SPEED ..... 110 MPH
   - B. NOMINAL DESIGN WIND SPEED ..... 85 MPH
   - C. WIND RISK CATEGORY ..... II
   - D. WIND EXPOSURE ..... C
   - E. INTERNAL PRESSURE COEFFICIENT ..... 0.18
   - F. COMPONENTS & CLADDING PRESSURE ..... 16 psf
7. SOILS CRITERIA
   - A. SOIL BEARING PRESSURE ..... 1,500 psf
   - B. SOIL SITE CLASS ..... D
   - C. FROST DEPTH ..... 30 INCHES
   - D. GEOTECH STUDY USED ..... NONE: ASSUMED SEISMIC VALUES USED
     GEOTECHNICAL REPORT IS RECOMMENDED

## GENERAL

1. CONSTRUCTION DOCUMENTS ARE VALID FOR A SINGLE USE AT THE PROJECT LOCATION AND SHALL NOT BE REUSED, COPIED, OR REPRODUCED WITHOUT WRITTEN APPROVAL OF THE REGISTERED DESIGN PROFESSIONAL IN RESPONSIBLE CHARGE.
2. THE GENERAL CONTRACTOR SHALL:
   - A. FIELD VERIFY ALL SITE CONDITIONS AND IMMEDIATELY NOTIFY THE ARCHITECT AND STRUCTURAL ENGINEER REGARDING ANY DISCREPANCIES WITH ACTUAL CONDITIONS AT THE SITE.
   - B. COORDINATE ALL WORK BETWEEN THE VARIOUS TRADES AND SUBCONTRACTORS. REPORT ANY MODIFICATIONS TO THE STRUCTURAL PORTION OF THE BUILDING BY OTHER TRADES TO THE ARCHITECT AND STRUCTURAL ENGINEER.
3. CONTRACT DOCUMENTS:
   - A. DETAILS, SECTIONS AND NOTES SHOWN ON THE STRUCTURAL DRAWINGS ARE INTENDED TO BE TYPICAL AND SHALL APPLY TO ALL SIMILAR SITUATIONS ELSEWHERE, UNLESS NOTED OR SHOWN OTHERWISE.
   - B. THE CONTRACT DOCUMENTS SHALL TAKE PRECEDENCE OVER SHOP DRAWINGS UNLESS SPECIFICALLY NOTED OTHERWISE.
4. BUILDING CODE COMPLIANCE:
   - A. INSPECTION, TESTING, CONSTRUCTION, WORKMANSHIP AND MATERIALS SHALL CONFORM TO THE REQUIREMENTS OF THE GOVERNING BUILDING CODE AND STANDARDS. ASTM AND IBC DESIGNATIONS SHALL BE AMENDED TO LATEST DATE UNLESS NOTED OTHERWISE.
5. CONSTRUCTION SEQUENCE, SHORING, AND BRACING REQUIREMENTS:
   - A. THE GENERAL CONTRACTOR IS RESPONSIBLE FOR THE METHODS, MEANS, AND SEQUENCE OF ALL STRUCTURAL ERECTION EXCEPT WHEN SPECIFICALLY NOTED OTHERWISE ON THE DRAWINGS. HE SHALL PROVIDE TEMPORARY SHORING AND BRACING AS HIS METHOD OF ERECTION REQUIRES TO PROVIDE ADEQUATE VERTICAL AND LATERAL SUPPORT DURING ERECTION. SHORING AND BRACING SHALL REMAIN IN PLACE UNTIL ALL PERMANENT MEMBERS ARE PLACED AND ALL FINAL CONNECTIONS ARE COMPLETED, INCLUDING ALL ROOF AND FLOOR ATTACHMENTS.
   - B. SHORING AND SUPPORTING FORM WORK FOR SUSPENDED CONCRETE OR MASONRY MATERIAL SHALL REMAIN IN PLACE AND SHALL NOT BE REMOVED UNTIL THE STRUCTURAL MEMBERS HAVE ACQUIRED SUFFICIENT STRENGTH TO SAFELY SUPPORT THEIR OWN WEIGHT AND ANY ADDITIONAL CONSTRUCTION, STORAGE, AND/OR OTHER LOADS TO WHICH THEY MAY BE SUBJECTED. IN NO CASE SHALL THEY BE REMOVED PRIOR TO 7 DAYS. RE-SHORING SHALL BE IMMEDIATELY INSTALLED UPON REMOVAL OF SUCH FORMS AND SHALL REMAIN IN PLACE UNTIL 28 DAYS AFTER PLACING OF MATERIAL OR UNTIL MATERIAL HAS REACHED ITS 28 DAY DESIGN STRENGTH, WHICHEVER IS LONGER. DO NOT REMOVE LARGE AREAS OF SHORING BEFORE STARTING RE-SHORING PROCEDURES.
   - C. NON-BEARING INTERIOR WALLS SHALL BE ADEQUATELY BRACED TO THE STRUCTURE ABOVE WITH ALLOWANCE FOR DEFLECTION OF THE STRUCTURE ABOVE AND/OR BELOW.
   - D. BUILDING WALLS WHICH RETAIN EARTH MUST BE BRACED AT THE TOP. DO NOT BACKFILL UNLESS BRACING IS PROVIDED OR UNTIL THE COMPLETE FLOOR OR ROOF SYSTEM IS IN PLACE, TYPICAL, UNLESS NOTED OTHERWISE.
6. OMISSIONS AND/OR CONFLICTS:
   - A. OMISSIONS IN AND/OR CONFLICTS BETWEEN THE VARIOUS ELEMENTS OF THE CONTRACT DOCUMENTS SHALL BE BROUGHT TO THE IMMEDIATE ATTENTION OF THE ARCHITECT AND STRUCTURAL ENGINEER AND SHALL BE RESOLVED BY THE SAME BEFORE PROCEEDING WITH ANY WORK INVOLVED.
7. REMODEL AND ADDITION PLANS:
   - A. DUV ENGINEERING, LLC ASSUMES NO LIABILITY FOR THE DESIGN AND CONSTRUCTION OF THE EXISTING BUILDING.
   - B. NOTIFY DUV ENGINEERING, LLC OF ANY DISCREPANCIES WITH THE EXISTING SITE AND PROPOSED CONSTRUCTION DOCUMENTS PRIOR TO TO ANY DEMOLITION AND CONSTRUCTION.

## DEFERRED SUBMITTAL NOTES

1. PRE-FABRICATED METAL PLATE TRUSSES ARE TO BE SUBMITTED SUBSEQUENT TO THE TIME OF APPLICATION.
2. DEFERRED SUBMITTALS SHALL HAVE THE PRIOR APPROVAL OF THE BUILDING OFFICIAL.
3. DEFERRED SUBMITTAL DOCUMENTS SHALL BE SUBMITTED TO THE REGISTERED DESIGN PROFESSIONAL IN RESPONSIBLE CHARGE WHO SHALL REVIEW AND FORWARD THEM TO THE BUILDING OFFICIAL WITH A NOTATION INDICATING THAT THE DOCUMENTS HAVE BEEN REVIEWED AND FOUND TO BE IN GENERAL CONFORMANCE TO THE DESIGN OF THE BUILDING.
4. DEFERRED SUBMITTAL ITEMS SHALL NOT BE INSTALLED UNTIL THE DESIGN AND SUBMITTAL DOCUMENTS HAVE BEEN APPROVED BY THE BUILDING OFFICIAL.

## DETAIL DESIGNATION LEGEND

TYP — USE THIS DETAIL IN ALL SIMILAR (TYPICAL) LOCATIONS ON PLANS (DETAIL MAY BE USED MORE THAN ONCE).

XXX — USE THIS DETAIL IN SPECIFIED LOCATION ONLY. DETAIL IS SPECIFIC TO A CERTAIN LOCATION NOTED ON PLANS.

## SITE PREPARATION

1. ARCHITECTURAL AND SITE PLANS FOR THIS PROJECT WERE PREPARED BY OTHERS. DUV ENGINEERING, LLC ASSUMES NO LIABILITY FOR THE ACCURACY, COMPLETENESS, OR CODE COMPLIANCE OF ARCHITECTURAL, ELECTRICAL, MECHANICAL OR DRAINAGE SPECS.
2. SOILS REPORT:
   - A. IF SOILS CONDITIONS VARY FROM THE SOILS REPORT, THE CONTRACTOR SHALL IMMEDIATELY INFORM THE ARCHITECT AND THE STRUCTURAL ENGINEER.
   - B. FOUNDATION DESIGN BASED ON THE NOTED PSF SOIL BEARING CAPACITY. WE RECOMMEND THAT A LICENSED GEOTECHNICAL ENGINEER VERIFY THE SOIL BEARING CAPACITY, SLOPE STABILITY, ETC.
3. REQUIREMENTS:
   - A. DO NOT PLACE FOOTINGS OR FOUNDATIONS ON DISTURBED SOILS, UNDOCUMENTED FILL, DEBRIS, FROZEN SOIL, OR IN PONDED WATER.
   - B. ALL UNSUITABLE SOILS AND VEGETATION, SUCH AS TOPSOIL, ORGANIC SOILS, UNDOCUMENTED FILL, DISTURBED NATIVE SOILS, AND OTHER DELETERIOUS MATERIALS, SHALL BE REMOVED FROM BELOW FOOTINGS, FOUNDATIONS, AND FLOOR SLABS.
   - C. STRUCTURAL FILL SHALL CONSIST OF IMPORTED, WELL GRADED, GRANULAR SOIL WITH A MAXIMUM PARTICLE SIZE OF THREE INCHES, LESS THAN 30 PERCENT RETAINED ON THE ¾" SIEVE, AND LESS THAN 15 PERCENT FINES (MATERIAL PASSING THE NO. 200 SIEVE). THE LIQUID LIMIT OF THE FINES SHALL NOT EXCEED 35 PERCENT AND THE PLASTICITY INDEX SHALL BE BELOW 15.
   - D. STRUCTURAL FILL SHALL BE PLACED IN MAXIMUM EIGHT INCH LOOSE LIFTS AND COMPACTED ON A HORIZONTAL PLANE. MOISTURE SHALL BE MAINTAINED BY PROPER MOISTURE CONTENT WITHIN TWO PERCENT OF THE OPTIMUM MOISTURE DETERMINED BY ASTM D 1557. COMPACT TO AT LEAST 95 PERCENT OF MAXIMUM DENSITY AS DETERMINED BY ASTM D 1557 BELOW FOOTINGS, FOUNDATIONS, AND FLOOR SLABS.
   - E. ALL STRUCTURAL FILL THAT BECOMES DISTURBED DURING CONSTRUCTION SHALL BE RE-COMPACTED PER THE COMPACTION REQUIREMENTS SPECIFIED ABOVE. IF SOFT OR PUMPING CONDITIONS ARE ENCOUNTERED, THE SUB-GRADE MUST BE PROPERLY STABILIZED. DE-WATERING, PLACEMENT OF GEO-FABRIC, OR OTHER STABILIZATION MAY BE REQUIRED.
   - F. ALL SLABS ON GRADE SHALL BE UNDERLAIN BY FOUR INCHES OF FREE-DRAINING GRANULAR MATERIAL SUCH AS "PEA" GRAVEL OR THREE-QUARTERS TO ONE INCH MINUS CLEAN GRAVEL.
   - G. THE GROUND IMMEDIATELY ADJACENT TO THE FOUNDATION SHALL HAVE A 5-PERCENT SLOPE AWAY FROM THE BUILDING FOR A MINIMUM DISTANCE OF 10 FEET MEASURED PERPENDICULAR TO THE FACE OF THE FOUNDATION WALL. IF PHYSICAL OBSTRUCTIONS OR LOT LINES PROHIBIT 10 FEET OF HORIZONTAL DISTANCE, A 5-PERCENT SLOPE SHALL BE PROVIDED TO AN APPROVED ALTERNATIVE METHOD OF DIVERTING WATER AWAY FROM THE FOUNDATION. IMPERVIOUS SURFACES WITHIN 10 FEET OF THE BUILDING FOUNDATION SHALL HAVE A MINIMUM 2-PERCENT SLOPE.

## CONCRETE

1. CONCRETE MATERIALS, QUALITY CONTROL, AND CONSTRUCTION SHALL COMPLY WITH CURRENT EDITIONS OF IBC AND ACI 318.
2. COMPRESSIVE STRENGTH (MINIMUM SPECIFIED AT 28 DAYS)
   - A. FOOTINGS: 3,000 PSI
   - B. INTERIOR FLOOR SLABS ON GRADE: 4,000 PSI
   - C. EXTERIOR FLOOR SLABS ON GRADE: 4,000 PSI
   - D. SUSPENDED SLABS: 4,000 PSI
   - E. WALLS: 3,000 PSI FOR R-2 AND R-3 OCCUPANCIES, 4,000 PSI FOR OTHER

   NOTE: 2500 PSI CONCRETE USED IN FOOTING DESIGN, HIGHER STRENGTHS SPECIFIED FOR QUALITY CONTROL.
3. MATERIALS
   - A. CEMENTS (ASTM C 150). CONCRETE EXPOSED TO FREEZING AND THAWING OR DEICING CHEMICALS SHALL CONFORM TO THE MAXIMUM WATER-CEMENTITIOUS MATERIAL RATIOS AND MINIMUM COMPRESSIVE STRENGTH REQUIREMENTS OF ACI-318.
   - B. AGGREGATES (ASTM C 33): NOMINAL MAXIMUM SIZE OF COARSE AGGREGATE SHALL NOT BE LARGER THAN [ ] THE NARROWEST DIMENSION BETWEEN FORMS, NOR [ ] THE DEPTH OF SLABS, NOR [ ] THE MINIMUM CLEAR SPACING BETWEEN REINFORCING BARS OR WIRES, TENDONS, OR DUCTS.
   - C. WATER USED IN MIXING CONCRETE SHALL BE POTABLE, CLEAN AND FREE FROM INJURIOUS AMOUNTS OF OILS, ACIDS, ALKALIS, SALTS, ORGANIC MATERIALS, OR OTHER SUBSTANCES DELETERIOUS TO CONCRETE OR REINFORCEMENT.
   - D. ADMIXTURES SHALL BE SUBJECT TO PRIOR APPROVAL BY THE REGISTERED DESIGN PROFESSIONAL IN RESPONSIBLE CHARGE.
   - E. CONCRETE EXPOSED TO FREEZING AND THAWING OR DEICING CHEMICALS SHALL BE AIR-ENTRAINED WITH AIR CONTENT INDICATED IN ACI 318. TOLERANCE ON AIR CONTENT AS DELIVERED SHALL BE PLUS/MINUS 1.5 PERCENT.
4. CONSTRUCTION:
   - A. CONCRETE SHALL BE PROPERLY VIBRATED DURING PLACEMENT.
   - B. PRIOR TO PLACING CONCRETE, CHECK WITH ALL TRADES TO ENSURE PROPER PLACEMENT OF OPENINGS, BLOCK-OUTS, SLEEVES, CURBS, CONDUITS, BOLTS, INSERTS, EMBEDS, DOWELS, ETC. ANCHOR BOLTS AND DOWELS SHALL BE PLACED PRIOR TO CASTING CONCRETE.
   - C. CONSTRUCTION JOINTS AND BULKHEADS SHALL BE FORMED WITH A KEYWAY. ALL CONTACT SURFACES, NEW OR EXISTING, AT CONSTRUCTION JOINTS SHALL BE INTENTIONALLY ROUGHENED PRIOR TO CASTING ADJACENT POUR.
   - D. OPENINGS IN FLOORS AND/OR WALLS SHALL HAVE ADDITIONAL REINFORCING AROUND ALL SIDES OF THE OPENING EQUIVALENT TO THE BARS CUT BY THE OPENING WITH HALF ON EACH SIDE OF THE OPENING OR 2-#4 BARS, WHICHEVER IS GREATER, UNLESS NOTED OTHERWISE. BARS PARALLEL TO THE PRINCIPAL REINFORCING SHALL RUN FULL LENGTH OF THE SPAN. BARS IN THE DIRECTION SHALL RUN 24 INCHES BEYOND THE EDGE OF THE OPENING OR END WITH A STANDARD HOOK. ALSO PROVIDE 2-#4 x 4'-0" DIAGONAL BARS AT EACH CORNER OF EACH OPENING.
   - E. NO PENETRATION SHALL BE ALLOWED THROUGH ANY CONCRETE BEAM, JOIST, COLUMN, PIER, WALL, OR JAMB WITHOUT THE ARCHITECT'S AND STRUCTURAL ENGINEER'S PRIOR WRITTEN APPROVAL. PENETRATIONS SHALL BE RE-ROUTED AS REQUIRED BY THE ENGINEER.
5. FOOTINGS:
   - A. FOOTINGS SHALL BEAR ON PROPERLY PREPARED MATERIAL. SEE THE SITE PREPARATION NOTES.
   - B. FOOTINGS SHALL BE CENTERED BELOW THE WALL AND/OR COLUMN ABOVE, TYPICAL UNLESS NOTED OTHERWISE.
   - C. EXTERIOR FOOTINGS SHALL BEAR BELOW THE EFFECTS OF FROST.
   - D. STAGGER FOOTING CONSTRUCTION JOINTS FROM WALL CONSTRUCTION JOINTS ABOVE BY AT LEAST 6 FEET.
   - E. REINFORCING IN CONTINUOUS FOOTINGS SHALL BE CONTINUOUS AT CORNERS AND/OR INTERSECTIONS BY PROVIDING PROPER LAP LENGTHS AND/OR CORNER BARS.
   - F. EXTERIOR CONTINUOUS FOOTINGS WITHOUT CONCRETE FOUNDATION WALLS ABOVE SHALL BE REINFORCED WITH A MINIMUM OF 2-#4 LONGITUDINAL TOP BARS IN ADDITION TO REINFORCING SPECIFIED IN THE FOOTING SCHEDULE.
   - G. NO PENETRATIONS SHALL BE ALLOWED THROUGH ANY CONCRETE FOOTING. WHEN CONFLICTS ARISE BETWEEN UNDERGROUND PLUMBING, UTILITIES, ETC., THE FOOTING SHALL BE STEPPED DOWN BELOW THE CONFLICT AND A CONCRETE WALL, PIER, COLUMN, ETC., SHALL BE EXTENDED TO THE FOOTING AS REQUIRED.
   - H. BEARING SURFACES FOR FOOTINGS WHICH ARE, OR BECOME, UNDERMINED DURING CONSTRUCTION SHALL BE BACKFILLED WITH A LEAN-MIX CONCRETE (1000 PSI MIN.).
6. SLABS ON GRADE:
   - A. INTERIOR SLABS ON GRADE SHALL BE A MINIMUM OF 4 INCHES THICK, SHALL BEAR ON A 4 INCH MINIMUM LAYER OF FREE-DRAINING GRAVEL.
   - B. CONTROL JOINT SPACING RULE OF THUMB IS 24x_ SLAB THICKNESS (4" SLAB = 8'-0" MAX O.C. EACH WAY). PROVIDE CONTROL JOINTS AT APPROX. 15'-0" EACH WAY (MAXIMUM).
   - C. SAW CUT WITHIN 6-18 HOURS OF POURING CONCRETE. CONCRETE MUST BE HARD ENOUGH TO PREVENT RAVELING OF JOINT EDGES OR DISLODGING OF COURSE AGGREGATE.
   - D. LARGE AREAS OF INTERIOR SLABS ON GRADE SHALL BE PLACED IN STRIPS NOT TO EXCEED 120 FEET IN LENGTH NOR 30 FEET IN WIDTH WHICH ARE SUBDIVIDED BY CONSTRUCTION AND/OR CONTRACTION (CONTROL) JOINTS INTO ROUGHLY SQUARES WHOSE SIDES SHALL NOT EXCEED 15 FEET IN EITHER DIRECTION.
7. WALLS:
   - A. PLACE VERTICAL REINFORCING IN THE CENTER OF THE WALL (EXCEPT FOR RETAINING WALLS, OR WHEN EACH FACE IS SPECIFIED).
   - B. VERTICAL REINFORCING SHALL BE DOWELED TO FOOTING OR STRUCTURE BELOW AND TO STRUCTURE ABOVE WITH THE SAME SIZE BAR AND SPACING, TYPICAL, UNLESS NOTED OTHERWISE.
   - C. PROVIDE CORNER BARS AT ALL INTERSECTIONS AND CORNERS. USE SAME SIZE BAR AND SPACING AS THE HORIZONTAL REINFORCING.
   - D. HORIZONTAL REINFORCING SHALL TERMINATE AT THE ENDS OF WALLS AND AT OPENINGS WITH A STANDARD HOOK.
   - E. WHEN TWO CURTAINS OF STEEL ARE REQUIRED, TIE SPLICES IN THE HORIZONTAL REINFORCING OF EACH CURTAIN SHALL NOT OCCUR AT THE SAME LOCATION.
   - F. PROVIDE DRAINAGE AT THE BASE OF RETAINING WALLS AND AT THE BASE OF ALL BASEMENT WALLS.
   - G. ANCHOR BOLTS SHALL HAVE A MIN. 7" EMBEDMENT INTO CONCRETE. PROVIDE 1 BOLT A MIN. OF 4" FROM END OF PLATE & A MAX. OF 12" FROM END OF PLATE. EACH PLATE IS TO HAVE A MIN. OF 2 BOLTS. ANCHOR BOLT SPACING IS NOT TO EXCEED 32" O.C. U.N.O. ON PLANS.
   - H. A PROPERLY SIZED NUT AND WASHER SHALL BE TIGHTENED ON EACH BOLT TO THE PLATE. ANCHOR BOLTS FOR STRUCTURES LOCATED IN SEISMIC DESIGN CATEGORY D,E, OR F SHALL INCLUDE A 3"x3"x.229" WASHER WITH ROUND OR SLOTTED HOLES.

## REINFORCING STEEL

1. CODES AND STANDARDS:
   - A. REINFORCING STEEL SHALL COMPLY WITH:
     - I. CONCRETE REINFORCING STEEL INSTITUTE "MANUAL OF STANDARD PRACTICE".
     - II. AMERICAN CONCRETE INSTITUTE "DETAILING MANUAL", ACI 315 (OR SP-66).
2. MATERIALS:
   - A. REINFORCING STEEL SHALL BE NEW STOCK DEFORMED BARS AND SHALL CONFORM TO ASTM A615, GRADE 60, WITH A DESIGN YIELD STRENGTH OF 60,000 PSI, EXCEPT AS NOTED BELOW.
     - I. DOWELS TO BE BENT IN THE FIELD DURING CONSTRUCTION SHALL BE ASTM A615, GRADE 40 OR ASTM A706, GRADE 60, "LOW ALLOY STEEL".
     - II. REINFORCING TO BE WELDED SHALL BE ASTM A706, GRADE 60, "LOW-ALLOY STEEL".
3. CONSTRUCTION:
   - A. REINFORCING SHALL BE DETAILED, BOLSTERED, AND SUPPORTED PER ACI 318 AND IBC.
   - B. REINFORCING STEEL SHALL BE FREE OF LOOSE, FLAKY RUST, SCALE, GREASE, OIL, DIRT, AND OTHER MATERIALS WHICH MIGHT AFFECT OR IMPAIR BOND.
   - C. REINFORCING SHALL BE CONTINUOUS IN WALLS, BEAMS, COLUMNS, SLABS, FOOTINGS, ETC.
   - D. SPLICES IN CONTINUOUS REINFORCING SHALL BE MADE IN AREAS OF COMPRESSION AND/OR AT POINTS OF MINIMUM STRESS, TYPICAL UNLESS NOTED OTHERWISE. LAP SPLICES SHALL BE 40 BAR DIAMETERS LONG IN CONCRETE AND 48 BAR DIAMETERS LONG IN MASONRY. MINIMUM LAP SHALL BE 24 INCHES LONG. DOWELS SHALL HAVE A MINIMUM OF 30 BAR DIAMETERS EMBEDMENT. TENSION SPLICES SHALL BE USED IN CONCRETE WHEN SPECIFICALLY NOTED, USE A CLASS B SPLICE. SPLICES IN TOP BARS IN SUSPENDED SLABS AND BEAMS SHALL BE MADE AT MID SPAN. SPLICES IN BOTTOM BARS IN SUSPENDED SLABS AND BEAMS SHALL BE MADE AT SUPPORTS.
   - E. BENDS SHALL BE MADE COLD. DO NOT USE HEAT. BENDS SHALL BE DONE IN THE FABRICATOR'S SHOP UNLESS SPECIFICALLY NOTED FOR THE FIELD. DO NOT UN-BEND OR RE- BEND A PREVIOUSLY BENT BAR.
   - F. REINFORCING STEEL IN CONCRETE SHALL BE SECURELY ANCHORED AND TIED IN PLACE PRIOR TO PLACING CONCRETE AND SHALL BE POSITIONED WITH THE FOLLOWING MINIMUM CONCRETE COVER:
     - CONCRETE CAST AGAINST AND PERMANENTLY EXPOSED TO EARTH ..... 3"
     - CONCRETE EXPOSED TO EARTH OR WEATHER:
       - #6 AND LARGER ..... 2"
       - #5 AND SMALLER ..... 1 1/2"
     - CONCRETE NOT EXPOSED TO EARTH OR WEATHER:
       - SLABS AND WALLS, #11 AND SMALLER ..... 1 1/2"
       - BEAMS AND COLUMNS, MAIN REINFORCING OR TIES ..... 1 1/2"
       - SLABS ON GRADE ..... CENTER OF SLAB
   - G. NO REINFORCING STEEL SHALL BE WELDED UNLESS SPECIFICALLY NOTED AS SUCH. USE E90XX ELECTRODES AND ASTM A706 REINFORCING. COMPLY WITH AWS REQUIREMENTS.

## POST INSTALLED ANCHORS

1. EPOXY ADHESIVE ANCHORING SYSTEMS:
   - A. CONCRETE: HILTI HIT-RE 500-SD OR SIMPSON SET-XP.
   - B. MASONRY (GROUTED): HILTI HIT-HY 150-MAX OR SIMPSON SET.
   - C. STEEL REINFORCEMENT AND RODS SHALL BE EMBEDDED 10 BAR DIAMETERS UNLESS NOTED OTHERWISE IN THE STRUCTURAL DRAWING AND DETAILS. WHERE 10 BAR DIAMETERS EXCEED THE MEMBER THICKNESS MINUS MINIMUM COVER, STEEL REINFORCEMENT SHALL BE EMBEDDED THE MEMBER THICKNESS MINUS MINIMUM COVER WITH A STANDARD HOOK.
   - D. EMBEDDED PORTIONS OF STEEL REINFORCEMENT AND RODS SHALL BE CLEAN, STRAIGHT, AND FREE OF MILL SCALE, RUST AND OTHER COATINGS THAT IMPAIR THE BOND WITH THE ADHESIVE. REINFORCEMENT MUST NOT BE BENT AFTER INSTALLATION.
2. MECHANICAL EXPANSION ANCHORS:
   - A. CONCRETE: HILTI KWIK BOLT TZ.
   - B. MASONRY: HILTI KWIK BOLT 3.
   - C. EXPANSION ANCHORS SHALL NOT BE USED IN TENSILE LOAD APPLICATIONS (E.G. HOLDOWNS, MOMENT FRAMES) AND MAY NOT BE USED TO SUBSTITUTE OTHER ANCHOR SYSTEMS.
3. POST-INSTALLED ANCHORING SYSTEMS SHALL BE INSTALLED ACCORDING TO THE MANUFACTURER'S INSTRUCTIONS. HOLE CLEANING METHOD SHALL BE BASED ON DRILLING METHOD AND BORE HOLE CONDITIONS AND SHALL CONFORM TO THE MANUFACTURER'S INSTRUCTIONS.

## GENERAL FRAMING NOTES

1. ALL JOISTS, RAFTERS, POSTS AND HEADERS SHALL BE DOUGLAS FIR LARCH NO.2 OR EQUAL U.N.O.
2. ALL JOISTS AND RAFTERS SHALL HAVE SOLID BLOCKING AT THEIR BEARING POINTS.
3. ALL WOOD/LUMBER PLACED ONTO CONCRETE SHALL BE PRESSURE TREATED OR REDWOOD.
4. ALL WOOD CONNECTIONS MUST CARRY THE CAPACITY OF THE MEMBER. CONTRACTOR IS RESPONSIBLE FOR CONNECTIONS. IF OTHER THAN STANDARD CONNECTIONS ARE REQUIRED, SEE PROJECT ENGINEER FOR ADDITIONAL ASSISTANCE. USE SIMPSON OR EQUAL CONNECTIONS FOR WOOD TO WOOD.
5. ALL COLUMNS SHALL EXTEND DOWN THROUGH THE STRUCTURE TO THE FOUNDATION. ALL COLUMNS SHALL BE BRACED AT ALL FLOOR LEVELS. COLUMNS SHALL BE AS WIDE AS THE MEMBER THEY SUPPORT. POSTS SUPPORTED BY SLABS OR FND WALLS TO HAVE SIMPSON CB POST BASE OR EQUIVALENT.
6. ALL FLOOR SHEATHING TO BE ¾" THICK T&G SHEATHING GLUED AND NAILED WITH 8d COMMON NAILS OR EQUAL @ 6" O.C. EDGES AND @ 12" O.C. IN FIELD.
7. VERIFY ALL BEAM SIZES WITH ENGINEERING SPECIFICATIONS.
8. ALL BEAMS AND HEADERS OVER 48" SHALL BE SUPPORTED BY DOUBLE TRIMMERS UNLESS NOTED OTHERWISE.
9. TRUSS MANUFACTURERS SHALL PROVIDE ENGINEERING SPECS. FOR ALL TRUSSES.
10. ¼" ROOF NAILING SCHEDULE AS FOLLOWS: (¼" ROOF SHEATHING TO USE 10d NAILS)
    - 8d NAILS @ 6" O.C. AT EDGES OF ROOF
    - 8d NAILS @ 4" O.C. AT GABLE ENDS
    - SPACE NAILS 12" O.C. ON INTERMEDIATE MEMBERS
    - STAGGER SHEATHING JOINTS
    - SHEATHING PERP. TO RAFTERS AND TRUSSES
11. PROVIDE SQUASH BLOCKING AT RIM JOIST BELOW ALL POSTS FROM ROOF, HEADER OR BEAM POINT LOADS. SQUASH BLOCKING TO BE SAME MATERIAL AS POST ABOVE.
12. PROVIDE DOUBLE FLOOR JOISTS BELOW ALL PARALLEL BEARING WALLS ABOVE.
13. GLULAM BEAMS SHALL BE 24F-V4 DF/DF FOR SINGLE SPANS AND 24F-V8 DF/DF FOR MULTIPLE SPANS, AND CANTILEVERED SPANS. GLULAMS EXPOSED TO WEATHER SHALL BE PRESSURE TREATED OR PROVIDE WEATHER PROTECTIVE COATING.
14. LAMINATED VENEER LUMBER (LVL) SHALL HAVE THE FOLLOWING PROPERTIES:E=1900KSI,Fb=2600PSI,Fv=285PSI.
15. ALL RAFTERS AND JOISTS OVER THREE FEET LONG SHALL BE HANGERED IF NOT SUPPORTED BY BOTTOM BEARING. ALL HANGERS AND OTHER WOOD CONNECTIONS MUST BE DESIGNED TO CARRY THE CAPACITY OF THE MEMBER THAT THEY ARE SUPPORTING.
16. FRAMING CONNECTIONS NOTED ON THE DRAWINGS ARE SIMPSON STRONG-TIE OR EQUAL. INSTALL WITH THE CATALOG DESIGNATED CONNECTOR IN EACH HOLE.
17. NO STRUCTURAL MEMBER SHALL BE CUT OR NOTCHED UNLESS SPECIFICALLY SHOWN, NOTED OR APPROVED BY ENGINEER.
18. LAG SCREWS SHALL BE INSERTED IN A DRILLED PILOT HOLE 60%-75% OF THE SHANK DIAMETER BY TURNING WITH A WRENCH, NOT BY DRIVING WITH A HAMMER. ALL NUTS, BOLTS AND LAG SCREWS SHALL BE PROVIDED WITH AN OVERSIZED WASHER.
19. NAILS TO BE COMMON WIRE UNLESS OTHERWISE NOTED.
20. ALL BOLT HOLES SHALL BE DRILLED WITH A BIT ⅛" TO ¼" LARGER THAN THE NOMINAL BOLT DIAMETER.
21. ALL JOINTS IN WALL SHEATHING SHALL OCCUR IN THE MIDDLE OF A PLATE OR BLOCK AND NAILED ON EACH SIDE OF THE JOINT WITH EDGE NAILING PER SHEARWALL SCHEDULE
22. COLUMNS AND POSTS LOCATED ON CONCRETE OR MASONRY FOUNDATIONS OR DECKS EXPOSED TO THE WEATHER OR TO WATER SPLASH OR IN BASEMENTS, AND WHICH SUPPORT PERMANENT STRUCTURES, SHALL BE SUPPORTED BY CONCRETE PIERS OR METAL PEDESTALS PROJECTING ABOVE FLOORS UNLESS APPROVED WOOD OF NATURAL RESISTANCE TO DECAY OR TREATED WOOD IS USED. THE PEDESTAL SHALL PROJECT AT LEAST 6" ABOVE EXPOSED EARTH & AT LEAST 1" ABOVE SUCH FLOORS.
23. ALL FASTENERS IN PRESSURE TREATED LUMBER ARE TO COMPLY WITH CURRENT IBC REQUIREMENTS.
24. ALL STAPLES INTO WOOD DIAPHRAGMS ARE TO BE A MINIMUM OF 1⅝" 16 GAGE WITH SPACING PER PLANS.
25. CHIMNEY & FIREPLACE FRAMING - PROVIDE FULL HT. 2x6 STUDS (MIN.) FROM BEARING TO TOP OF CHIMNEY. USE (2) 2"x3" SDS SCREWS AT EACH STUD TO POTABLE, CLEAR AND FREE FROM INJURIOUS AMOUNTS OF
26. PROVIDE KING STUDS AT THE END OF FRAMED WALL OPENINGS PER TABLE (U.N.O.):

| MAX HEADER SPAN (FT.) | NO. OF KING STUDS |
|---|---|
| 4'-0" | 1 |
| 8'-0" | 2 |
| 14'-0" | 3 |
| 20'-0" | 4 |

## PRE-FABRICATED METAL PLATE WOOD TRUSS NOTES

1. BOTTOM CHORDS OF TRUSSES, ACTING AS CEILING MEMBERS MUST BE ABLE TO SUPPORT A 10 PSF LIVE LOAD PER IBC REQUIREMENTS.
2. THE TRUSS MANUFACTURER SHALL BE RESPONSIBLE FOR THE DESIGN AND FABRICATION OF THE PRE-ENGINEERED TRUSSES, INCLUDING ALL TEMPORARY BRACING. PERMANENT LATERAL BRACING, TRUSS TO TRUSS CONNECTIONS AND SHALL DESIGN THE TRUSSES PER ATTACHED ENGINEERING SPECS.
3. THE TRUSSES SHALL BE DESIGNED TO CARRY ANY ADDITIONAL LOADS DUE TO MECHANICAL UNITS, OVERHEAD DOORS, LIGHT FIXTURES, ETC.
4. THE TRUSSES SHALL ALSO BE DESIGNED PER THE MOST RECENT BUILDING CODE, AND LOCAL ORDINANCES. DESIGN MUST ALSO TAKE INTO ACCOUNT UNBALANCED SNOW LOADS, SNOW DRIFTING, INCREASED SNOW LOADS ON EAVES AND VALLEYS, IMPACT LOADS FROM FALLING SNOW, ETC.
5. ALL MEMBERS SHALL BE DESIGNED FOR COMBINED STRESSES, BASED ON WORST CASE CONDITION.
6. ALL DIMENSIONS SHALL BE FIELD VERIFIED PRIOR TO FABRICATION.
7. THE CONTRACTOR SHALL BE RESPONSIBLE FOR THE PROPER ORIENTATION OF THE TRUSSES PER THE TRUSS MANUFACTURER'S RECOMMENDATIONS AND SPECIFICATIONS. NO WEB OR CHORD MEMBERS SHALL BE MODIFIED IN THE FIELD.
8. THE PROJECT ENGINEER, OR ENGINEER OF RECORD, IS NOT RESPONSIBLE FOR THE PRE-ENGINEERED TRUSSES, NOR FOR THE INSTALLATION ETC. OF THE TRUSSES. TRUSS PLANT SHALL PROVIDE LICENSED ENGINEERED PLAN.
9. TRUSSES SPANN

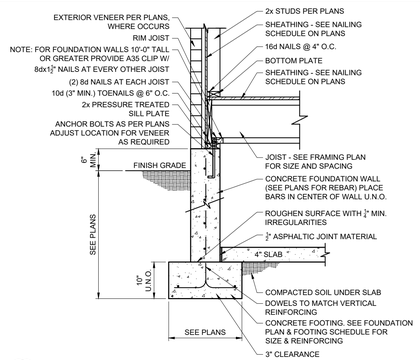


## 1 JOIST PERPENDICULAR TO FOUNDATION WALL DETAIL

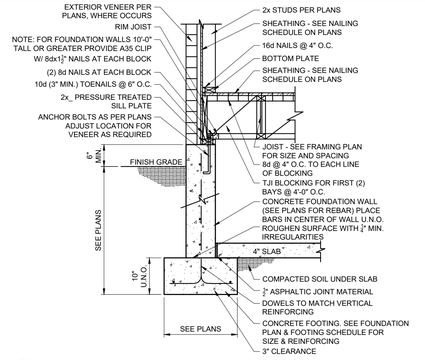


## 2 JOIST PARALLEL TO FOUNDATION WALL DETAIL

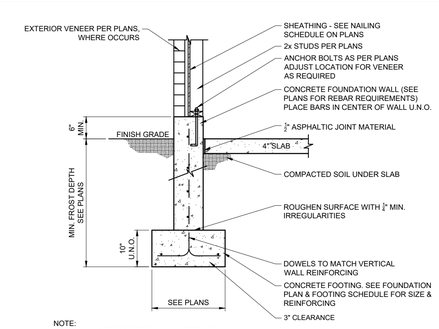


NOTE:
1. SLAB MAY BE POURED FLUSH W/ TOP OF FOUNDATION WALL AS REQUIRED PER PLANS.

## 3 FOUNDATION WALL DETAIL

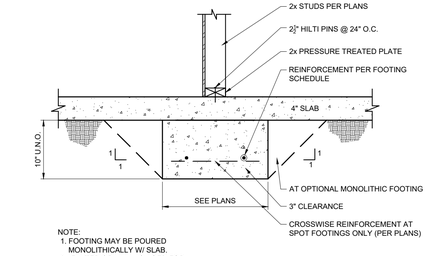


NOTE:
1. FOOTING MAY BE POURED MONOLITHICALLY W/ SLAB.
2. IF INTERIOR WALL IS USED FOR SHEAR WALL USE ¾"x10" ANCHOR BOLTS @ 32" O.C. U.N.O. ON PLANS.

## 4 INTERIOR FOOTING DETAIL

| PIER | VERTICAL REBAR |
|---|---|
| 12" | (4) #4 |
| 16" | (8) #4 |
| 20" | (8) #5 |
| 24" | (12) #5 |
| 30" | (16) #5 |
| 36" | (24) #5 |

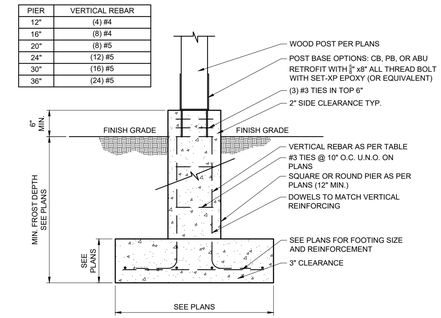


NOTE: PIER TO MATCH WIDTH OF FINISH VENEER ABOVE GRADE.

## 5 SPOT FOOTING & PIER DETAIL

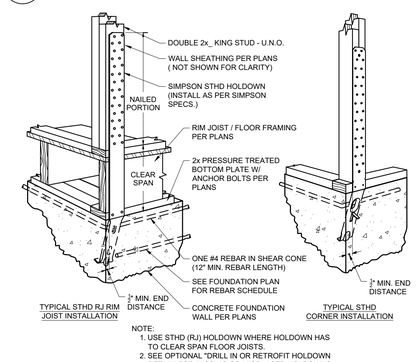


NOTE:
1. USE STHD (RJ) HOLDOWN WHERE HOLDOWN HAS TO CLEAR SPAN FLOOR JOISTS.
2. SEE OPTIONAL "DRILL IN OR RETROFIT HOLDOWN DETAIL" FOR MISSING OR MISPLACED HOLDOWNS.

## 6 HOLDOWN STRAP DETAIL

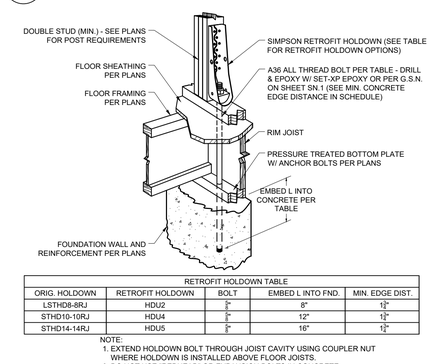


| RETROFIT HOLDOWN TABLE | | | | |
|---|---|---|---|---|
| ORIG. HOLDOWN | RETROFIT HOLDOWN | BOLT | EMBED L INTO FND. | MIN. EDGE DIST. |
| LSTHD8-8RJ | HDU2 | ⅝" | 8" | 1¾" |
| STHD10-10RJ | HDU4 | ⅝" | 12" | 1¾" |
| STHD14-14RJ | HDU5 | ⅝" | 16" | 1¾" |

NOTE:
1. EXTEND HOLDOWN BOLT THROUGH JOIST CAVITY USING COUPLER NUT WHERE HOLDOWN IS INSTALLED ABOVE FLOOR JOISTS.
2. DO NOT USE "REDHEAD" OR EXPANSION BOLTS IN CONCRETE.

## 7 DRILL IN OR RETROFIT HOLDOWN DETAIL

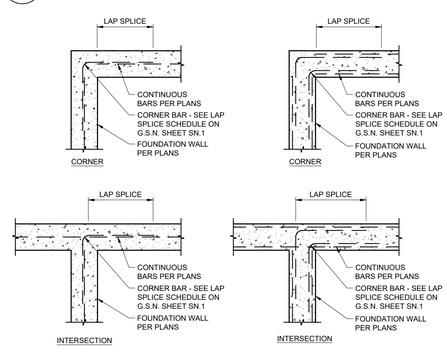


## 8 TYPICAL CONCRETE CORNER REINFORCING (PLAN VIEW)

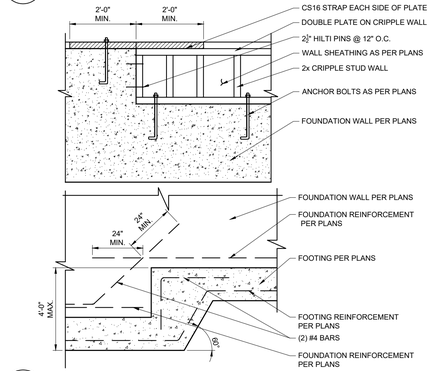


## 9 FOOTING & FOUNDATION WALL STEP DETAIL

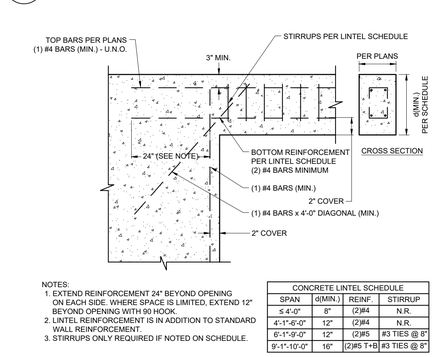


NOTES:
1. EXTEND REINFORCEMENT 24" BEYOND OPENING ON EACH SIDE. WHERE SPACE IS LIMITED, EXTEND 12" BEYOND OPENING WITH 90 HOOK.
2. LINTEL REINFORCEMENT IS IN ADDITION TO STANDARD WALL REINFORCEMENT.
3. STIRRUPS ONLY REQUIRED IF NOTED ON SCHEDULE.

| CONCRETE LINTEL SCHEDULE | | | |
|---|---|---|---|
| SPAN | d(MIN.) | REINF. | STIRRUP |
| ≤ 4'-0" | 8" | (2)#4 | N.R. |
| 4'-1"-6'-0" | 12" | (2)#4 | N.R. |
| 6'-1"-9'-0" | 12" | (2)#5 | #3 TIES @ 8" |
| 9'-1"-10'-0" | 16" | (2)#5 T+B | #3 TIES @ 8" |

## 10 LINTEL AT CONCRETE WALL

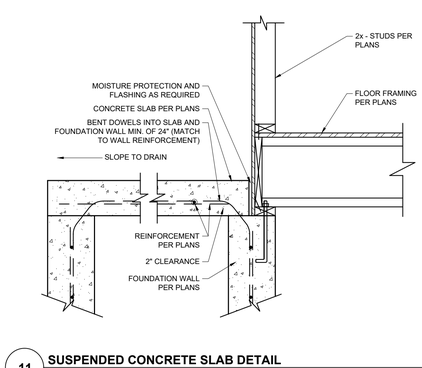


## 11 SUSPENDED CONCRETE SLAB DETAIL

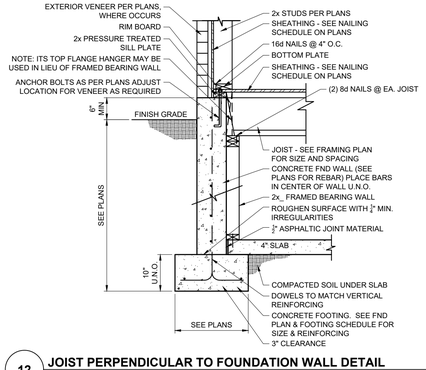


## 12 JOIST PERPENDICULAR TO FOUNDATION WALL DETAIL

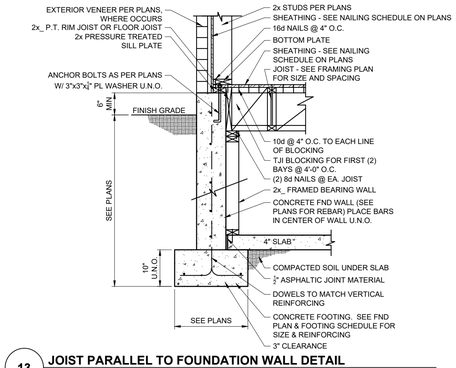


## 13 JOIST PARALLEL TO FOUNDATION WALL DETAIL

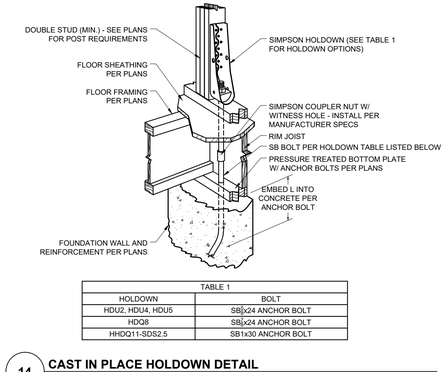


| TABLE 1 | |
|---|---|
| HOLDOWN | BOLT |
| HDU2, HDU4, HDU5 | SB⅝x24 ANCHOR BOLT |
| HDQ8 | SB⅝x24 ANCHOR BOLT |
| HHDQ11-SDS2.5 | SB1x30 ANCHOR BOLT |

## 14 CAST IN PLACE HOLDOWN DETAIL

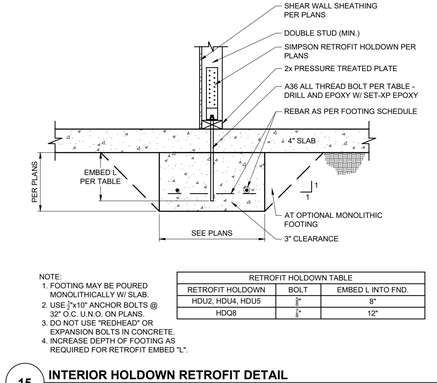


NOTE:
1. FOOTING MAY BE POURED MONOLITHICALLY W/ SLAB.
2. USE ¾"x10" ANCHOR BOLTS @ 32" O.C. U.N.O. ON PLANS.
3. DO NOT USE "REDHEAD" OR EXPANSION BOLTS IN CONCRETE.
4. INCREASE DEPTH OF FOOTING AS REQUIRED FOR RETROFIT EMBED "L".

| RETROFIT HOLDOWN TABLE | | |
|---|---|---|
| RETROFIT HOLDOWN | BOLT | EMBED L INTO FND. |
| HDU2, HDU4, HDU5 | ⅝" | 8" |
| HDQ8 | ¾" | 12" |

## 15 INTERIOR HOLDOWN RETROFIT DETAIL

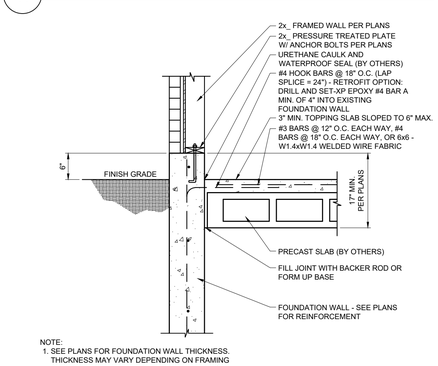


NOTE:
1. SEE PLANS FOR FOUNDATION WALL THICKNESS. THICKNESS MAY VARY DEPENDING ON FRAMING AND EXTERIOR VENEER. (VERIFY WITH PLANS)

## 16 PRECAST TO FOUNDATION WALL DETAIL (PARALLEL)

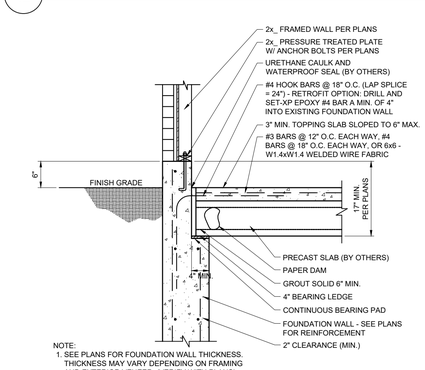


NOTE:
1. SEE PLANS FOR FOUNDATION WALL THICKNESS. THICKNESS MAY VARY DEPENDING ON FRAMING AND EXTERIOR VENEER. (VERIFY WITH PLANS)

## 17 PRECAST TO FOUNDATION WALL DETAIL (PERPENDICULAR)

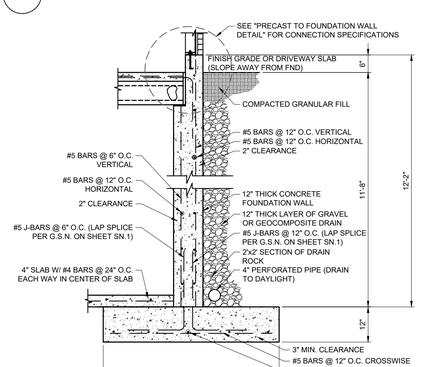


## 18 PRECAST TO TALL FOUNDATION WALL DETAIL

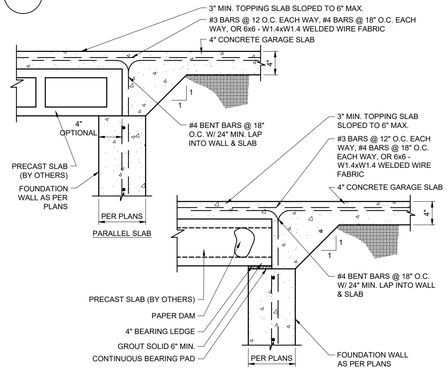


## 19 PRECAST TO INTERIOR FOUNDATION WALL DETAIL

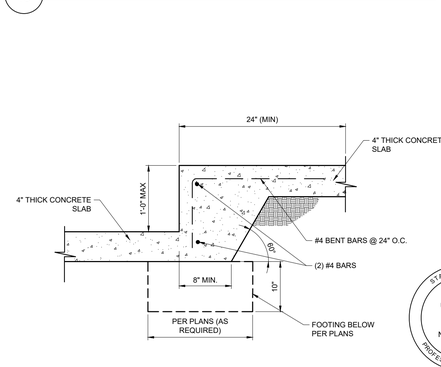


## 20 CONCRETE SLAB STEP DETAIL

STATE OF UTAH
DANIEL S. URQUHART
No. 10188152
DATE: 3-2-21
PROFESSIONAL ENGINEER

REVISIONS

DRIFTWOOD HOME DESIGN
PH. 801-857-9633 | WWW.DRIFTWOODPLANS.COM

DESIGNED FOR:
# CARROLL RESIDENCE
WILLOW CANYON SUBDIVISION, PLAT2B, LOT 30, ALPINE, UTAH

DATE: 3.1.21
SCALE: NTS
DRAWN BY: JAC
FILE NAME: 20-031

STRUCTURAL DETAILS
SD.1

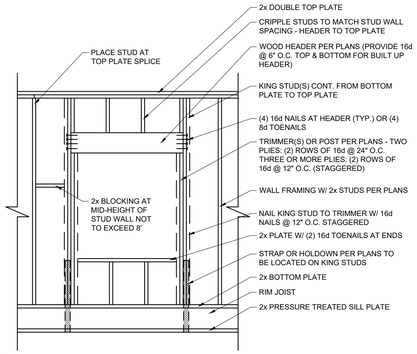


## 1 WALL FRAMING DETAIL

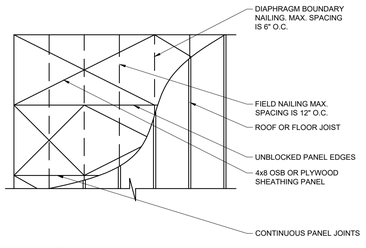


NOTE:
1. FOR BLOCKED DIAPHRAGM OPTIONS, PROVIDE 2x4 BLOCKS AT ALL FREE PANEL EDGES.

## 2 HORIZONTAL DIAPHRAGM DETAIL

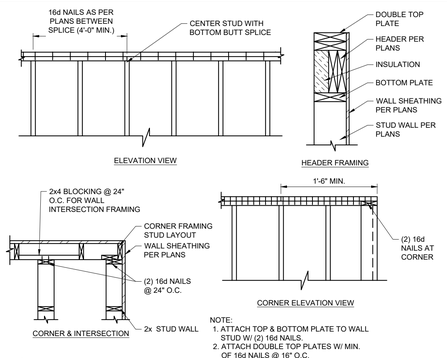


NOTE:
1. ATTACH TOP & BOTTOM PLATE TO WALL STUD W/ (2) 16d NAILS.
2. ATTACH DOUBLE TOP PLATES W/ MIN. OF 16d NAILS @ 16" O.C.

## 3 TOP PLATE SPLICE & ADVANCED FRAMING DETAIL

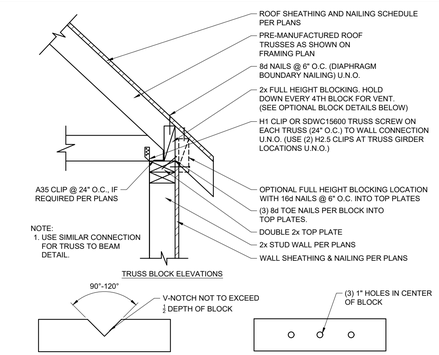


NOTE:
1. USE SIMILAR CONNECTION FOR TRUSS TO BEAM DETAIL.

## 4 TRUSS TO WALL CONNECTION DETAIL

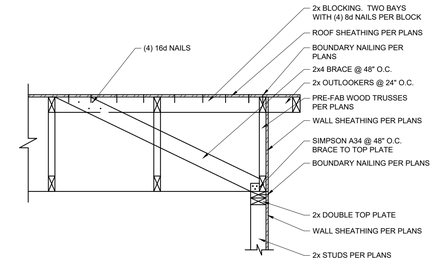


## 5 GABLE END TRUSS BRACING DETAIL

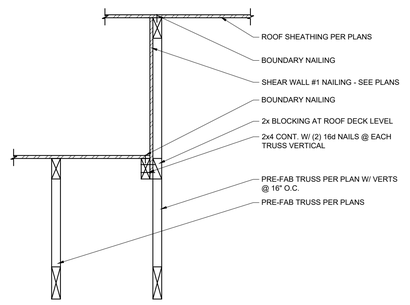


## 6 ROOF DIAPHRAGM ELEVATION CHANGE DETAIL

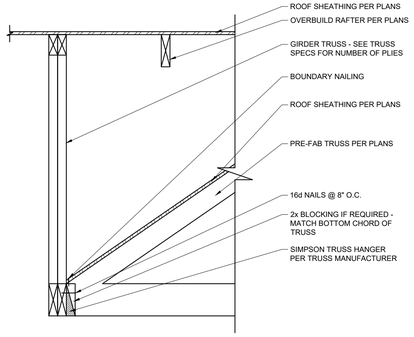


## 7 TRUSS TO TRUSS CONNECTION DETAIL

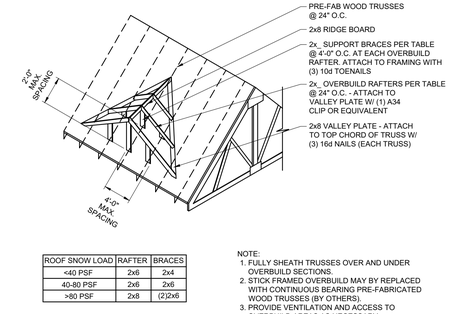


| ROOF SNOW LOAD | RAFTER | BRACES |
|---|---|---|
| <40 PSF | 2x6 | 2x4 |
| 40-80 PSF | 2x6 | 2x6 |
| >80 PSF | 2x8 | (2)2x6 |

NOTE:
1. FULLY SHEATH TRUSSES OVER AND UNDER OVERBUILD SECTIONS.
2. STICK FRAMED OVERBUILD MAY BY REPLACED WITH CONTINUOUS BEARING PRE-FABRICATED WOOD TRUSSES (BY OTHERS).
3. PROVIDE VENTILATION AND ACCESS TO OVERBUILD AREAS AS NECESSARY.

## 8 ROOF OVERBUILD DETAIL

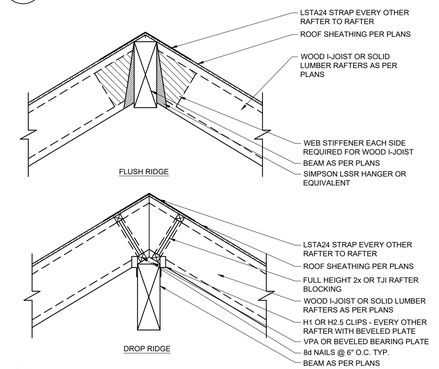


## 9 RIDGE BEAM DETAIL

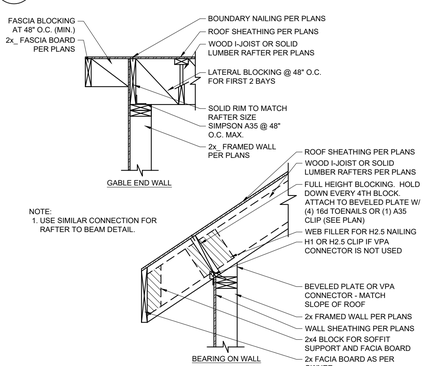


NOTE:
1. USE SIMILAR CONNECTION FOR RAFTER TO BEAM DETAIL.

## 10 RAFTER TO WALL CONNECTION DETAIL

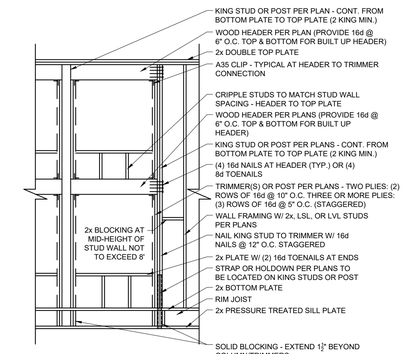


## 11 TALL WALL FRAMING DETAIL

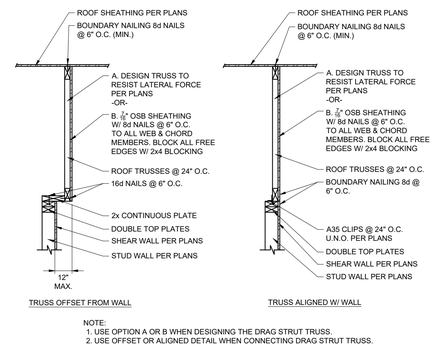


NOTE:
1. USE OPTION A OR B WHEN DESIGNING THE DRAG STRUT TRUSS.
2. USE OFFSET OR ALIGNED DETAIL WHEN CONNECTING DRAG STRUT TRUSS.

## 12 DRAG STRUT TRUSS DETAIL

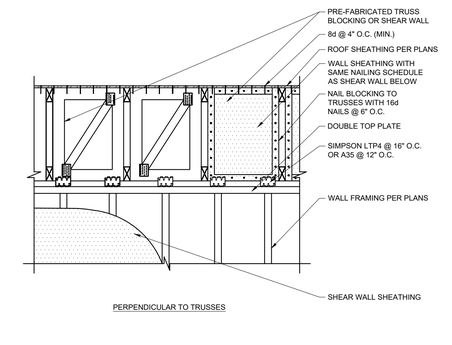


## 13 FULL HEIGHT TRUSS BLOCKING DETAIL

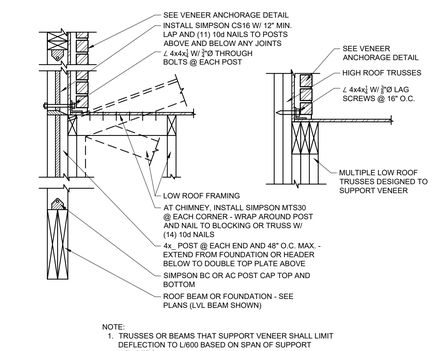


NOTE:
1. TRUSSES OR BEAMS THAT SUPPORT VENEER SHALL LIMIT DEFLECTION TO L/600 BASED ON SPAN OF SUPPORT MEMBERS.

## 14 VENEER OVER LOW ROOF

| STRAP SCHEDULE | | | |
|---|---|---|---|
| STRAP | NAILING | BLOCKING | LAP LENGTH |
| CS16 | (2) 8d @ 4 ½" O.C. | 2x | 12" (MIN.) |
| CS14 | (2) 10d @ 4 ½" O.C. | 2x | 16" |
| (2) CS16 | (2) 8d @ 4 ½" O.C. EACH STRAP | (2)2x_ | 12" |
| CMSTC16 | (2) 16d SINKER @ 3" O.C. | (2)2x_ | 20" |

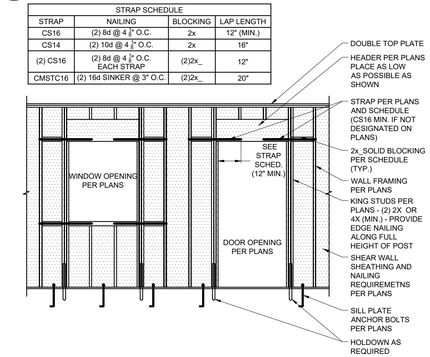


## 15 FORCE TRANSFER AT SHEARWALL DETAIL (FTAO)

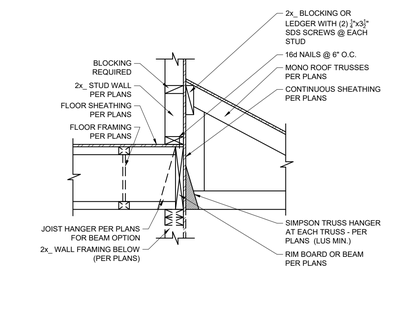


## 16 LOW ROOF TRUSS TO WALL CONNECTION DETAIL (PERP.)

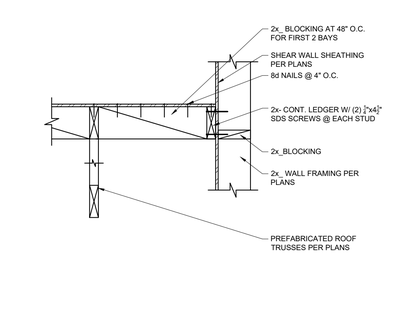


## 17 LOW ROOF TRUSS TO WALL CONNECTION DETAIL ( PARALLEL)




## 18 WINDOW BOX FRAMING DETAIL




## 19 BEAM TO POST CONNECTION DETAIL OPTIONS




## 20 BEAM TO WALL CONNECTION DETAIL

STATE OF UTAH
DANIEL S. URQUHART
No. 10188152
DATE: 3-2-21
PROFESSIONAL ENGINEER

REVISIONS

DRIFTWOOD HOME DESIGN
PH. 801-857-9633 | WWW.DRIFTWOODPLANS.COM

DESIGNED FOR:
CARROLL RESIDENCE
WILLOW CANYON SUBDIVISION, PLAT2B, LOT 30, ALPINE, UTAH

DATE: 3.1.21
SCALE: NTS
DRAWN BY: JAC
FILE NAME: 20-031

STRUCTURAL DETAILS
SD.2

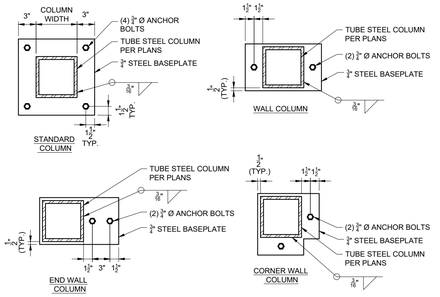


NOTES:
1. MIN. EMBED ON A STANDARD J-BOLT IS TO BE 7".
2. CONTRACTOR SHALL BRACE COLUMNS AS PER OSHA SPECIFICATIONS UNTIL SUPPORTING STRUCTURE IS IN PLACE.
3. COORDINATE EXACT POSITIONING W/ ARCHITECTURAL DRAWINGS.

## 1 TYPICAL STEEL BASEPLATE DETAIL

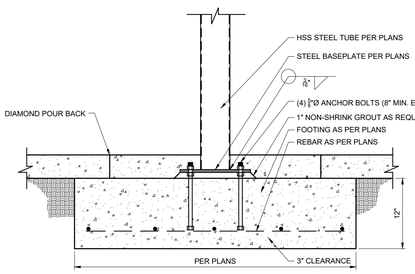


## 2 STEEL POST TO DIAMOND POUR BACK

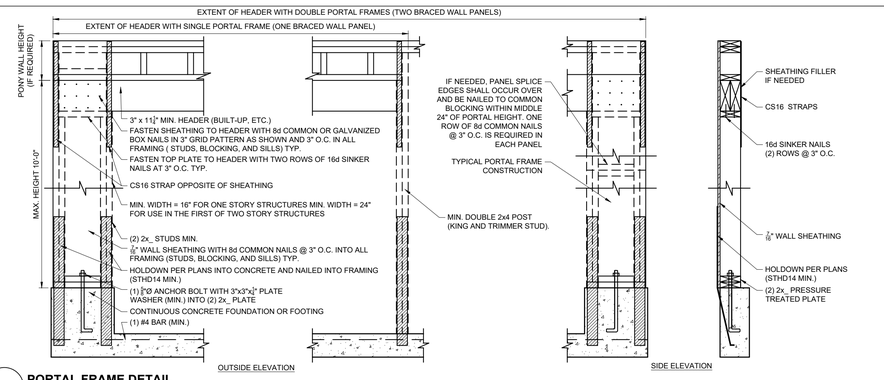


## 3 PORTAL FRAME DETAIL

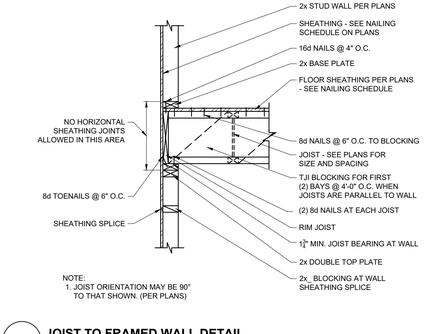


NOTE:
1. JOIST ORIENTATION MAY BE 90° TO THAT SHOWN. (PER PLANS)

## 4 JOIST TO FRAMED WALL DETAIL

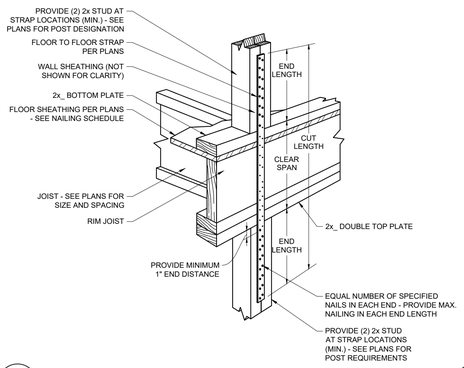


## 5 FLOOR TO FLOOR STRAP DETAIL

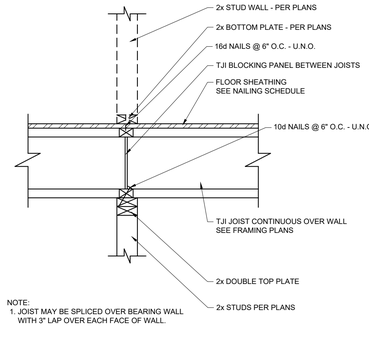


NOTE:
1. JOIST MAY BE SPLICED OVER BEARING WALL WITH 3" LAP OVER EACH FACE OF WALL.

## 6 INTERIOR FRAMED BEARING WALL DETAIL

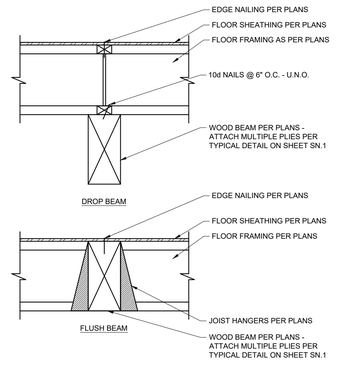


## 7 FLOOR BEAM CONNECTION DETAIL

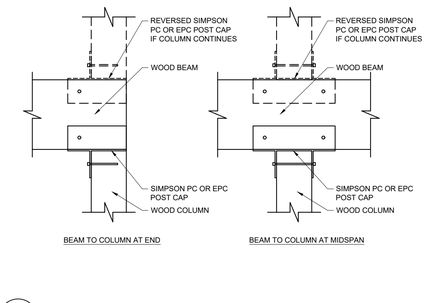


## 8 TYPICAL BEAM TO COLUMN CONNECTION DETAIL

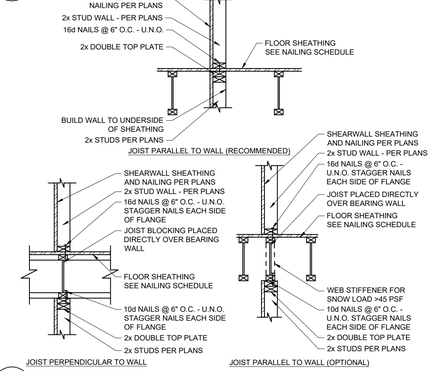


## 9 INTERIOR SHEARWALL TO FLOOR

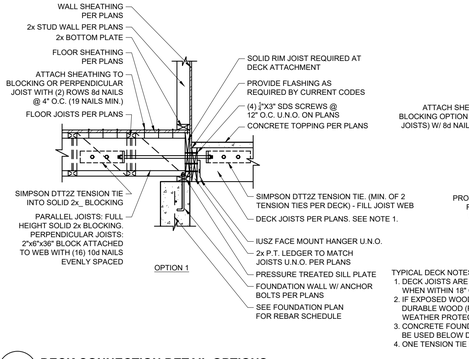


TYPICAL DECK NOTES:
1. DECK JOISTS ARE REQUIRED TO BE PRESSURE TREATED WHEN WITHIN 18" OF FINISHED GRADE.
2. IF EXPOSED WOOD MEMBERS ARE NOT P.T. OR NATURALLY DURABLE WOOD (REDWOOD, CEDAR, ETC.), PROVIDE WEATHER PROTECTIVE COATING PER CONTRACTOR.
3. CONCRETE FOUNDATION WALL OR WOOD FRAMED WALL MAY BE USED BELOW DECK FOR BOTH OPTIONS - PER PLANS.
4. ONE TENSION TIE TO BE LOCATED WITHIN 2'-0" OF DECK ENDS.

## 10 DECK CONNECTION DETAIL OPTIONS

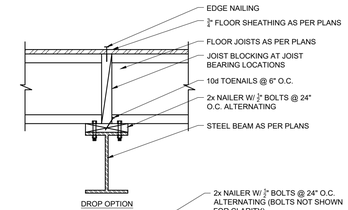


## 14 FLOOR JOIST TO STEEL BEAM DETAIL

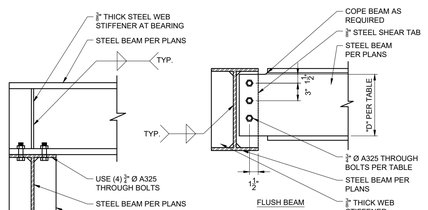


| FLUSH BEAM CONNECTION SCHDULE | | |
|---|---|---|
| BEAM SIZE | SHEAR TAB "D" (MIN.) | NO. BOLTS |
| W8 | 6 | 2 |
| W10 | 6 | 2 |
| W12 | 9 | 3 |
| W14 | 9 | 3 |
| W16 | 12 | 4 |
| W18 | 15 | 5 |
| W21 | 18 | 6 |

## 15 STEEL BEAM TO STEEL BEAM CONNECTION DETAILS

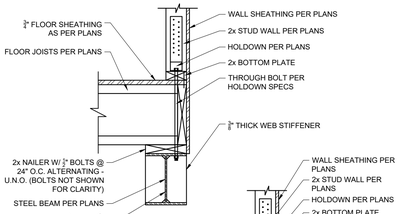


## 16 HOLDOWN TO STEEL BEAM DETAIL

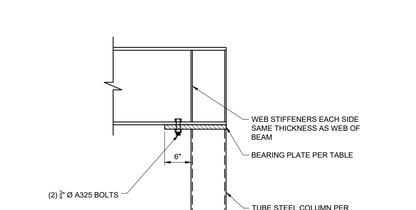


## 17 WOOD BEAM TO STEEL BEAM CONNECTION DETAIL




| BEARING PLATE DIMENSIONS | |
|---|---|
| WIDTH | WIDTH OF BEAM FLANGES OR COLUMN |
| THICKNESS | THICKNESS OF BEAM FLANGES |
| LENGTH | WIDTH OF COLUMN + 6" (TYP.) |

## 18 STEEL BEAM TO STEEL POST CONNECTION DETAIL

STATE OF UTAH
DANIEL S. URQUHART
No. 10188152
DATE: 3-2-21
PROFESSIONAL ENGINEER

REVISIONS

DRIFTWOOD HOME DESIGN
PH. 801-857-9633 | WWW.DRIFTWOODPLANS.COM

DESIGNED FOR:
# CARROLL RESIDENCE
WILLOW CANYON SUBDIVISION, PLAT2B, LOT 30, ALPINE, UTAH

DATE: 3.1.21
SCALE: NTS
DRAWN BY: JAC
FILE NAME: 20-031

STRUCTURAL DETAILS
SD.3

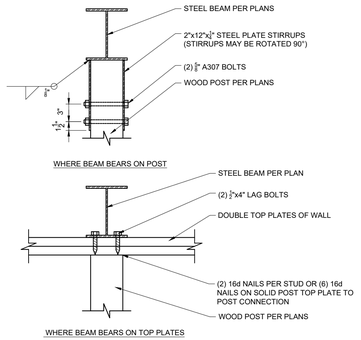


## 1 STEEL BEAM TO WOOD POST DETAIL

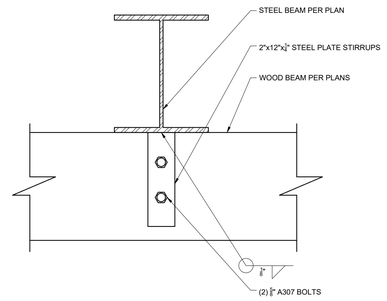


## 2 STEEL BEAM TO WOOD BEAM CONNECTION DETAIL

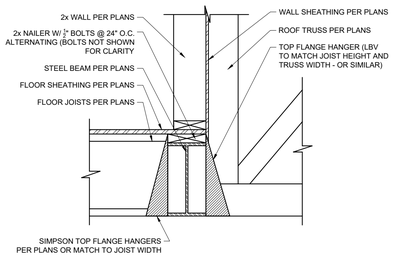


## 3 JOIST TO STEEL BEAM CONNECTION DETAIL

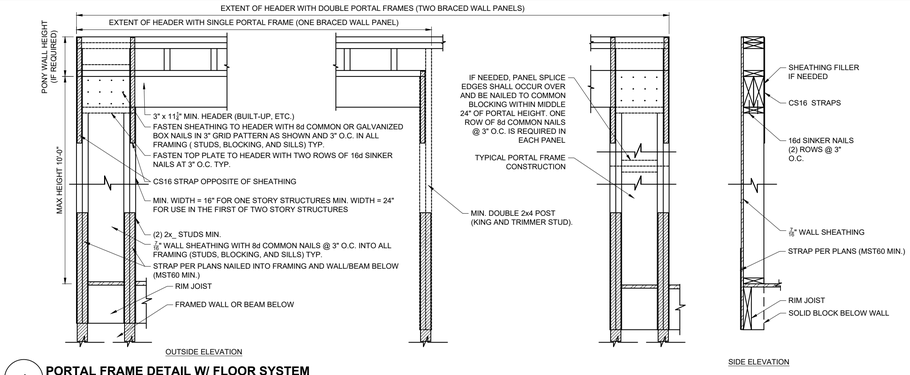


## 4 PORTAL FRAME DETAIL W/ FLOOR SYSTEM




## 5 KNEE BRACE DETAIL




## 6 STEEL ANGLE FOR STONE BEARING




## 7 STEEL BEAM TO STEEL POST CONNECTION DETAIL




## 8 WOOD KICKER DETAIL

REVISIONS

DRIFTWOOD HOME DESIGN
PH. 801-857-9633 | WWW.DRIFTWOODPLANS.COM

DESIGNED FOR:

# CARROLL RESIDENCE

WILLOW CANYON SUBDIVISION, PLAT2B, LOT 30, ALPINE, UTAH

DATE: 3.1.21
SCALE: NTS
DRAWN BY: JAC
FILE NAME: 20-031

STATE OF UTAH
DANIEL S. URQUHART
No. 10188152
DATE: 3-3-21
PROFESSIONAL ENGINEER

STRUCTURAL DETAILS

SD.4

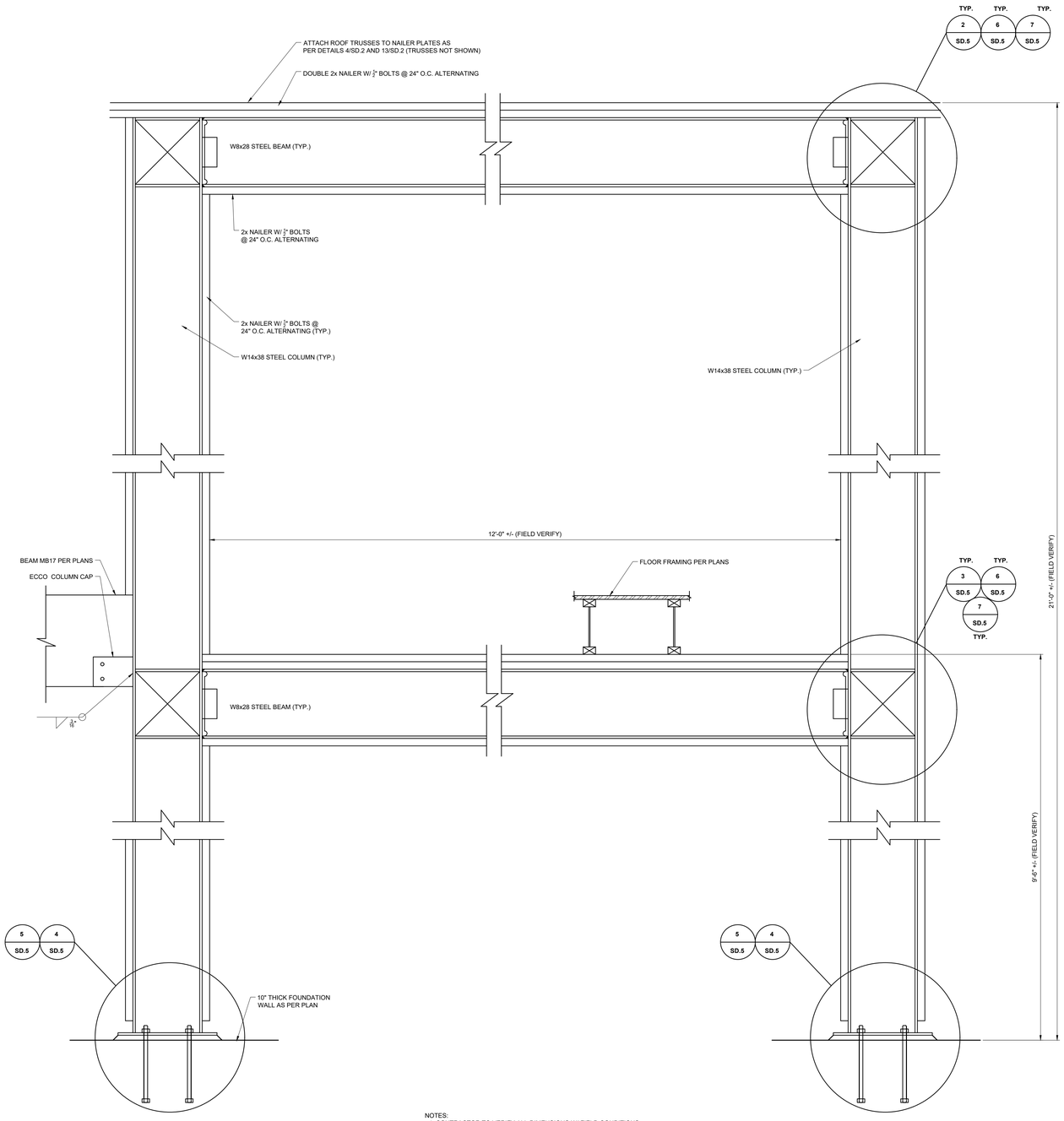


NOTES:
1. CONTRACTOR TO VERIFY ALL DIMENSIONS W/ FIELD CONDITIONS.
2. NAILER BOLTS NOT SHOWN FOR CLARITY.
3. POSITION STEEL FRAME IN 2x_ FRAMED WALL. FURR OUT WALL AS REQUIRED.
4. ALL ACCESS HOLES ARE TO BE DETAILED PER AISC SPECIFICATIONS SECTION J1.6.

## 1 STEEL FRAME DETAIL

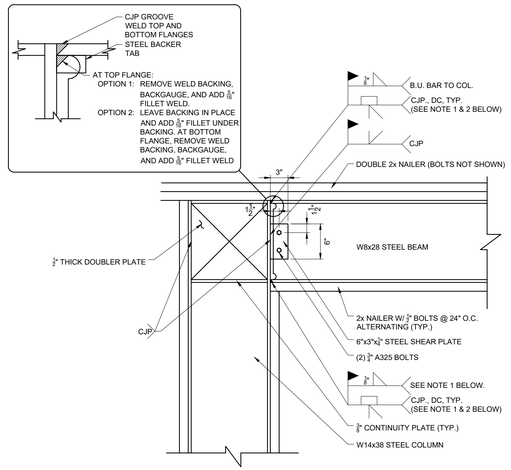


## 2 STEEL MOMENT CONNECTION DETAIL

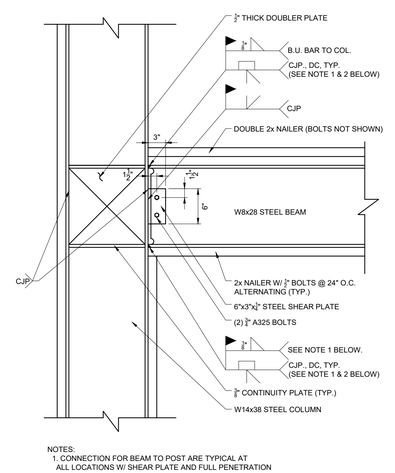


NOTES:
1. CONNECTION FOR BEAM TO POST ARE TYPICAL AT ALL LOCATIONS W/ SHEAR PLATE AND FULL PENETRATION GROOVE WELDS.

## 3 STEEL MOMENT CONNECTION DETAIL

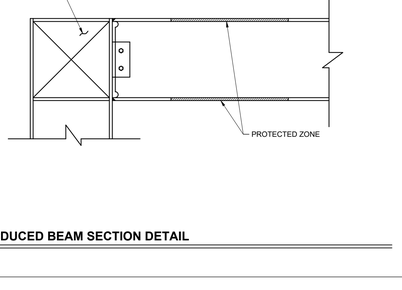


## 4 STEEL COLUMN TO BASEPLATE CONNECTION DETAIL

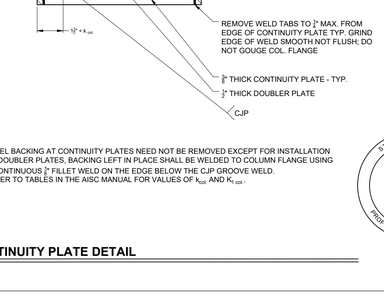


## 5 STEEL BASEPLATE DETAIL




## 6 REDUCED BEAM SECTION DETAIL

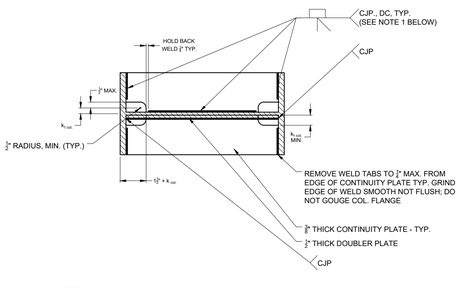


NOTES:
1. STEEL BACKING AT CONTINUITY PLATES NEED NOT BE REMOVED EXCEPT FOR INSTALLATION OF DOUBLER PLATES, BACKING LEFT IN PLACE SHALL BE WELDED TO COLUMN FLANGE USING A CONTINUOUS ¼" FILLET WELD ON THE EDGE BELOW THE CJP GROOVE WELD.
2. REFER TO TABLES IN THE AISC MANUAL FOR VALUES OF $k_{det}$ AND $K_{1 det}$.

## 7 CONTINUITY PLATE DETAIL

STATE OF UTAH
DANIEL S. URQUHART
No. 10188152
DATE: 3-3-21
PROFESSIONAL ENGINEER

REVISIONS

DRIFTWOOD HOME DESIGN
PH. 801-857-9633 | WWW.DRIFTWOODPLANS.COM

DESIGNED FOR:
# CARROLL RESIDENCE
WILLOW CANYON SUBDIVISION, PLAT2B, LOT 30, ALPINE, UTAH

DATE: 3.1.21
SCALE: NTS
DRAWN BY: JAC
FILE NAME: 20-031

STRUCTURAL DETAILS
SD.5

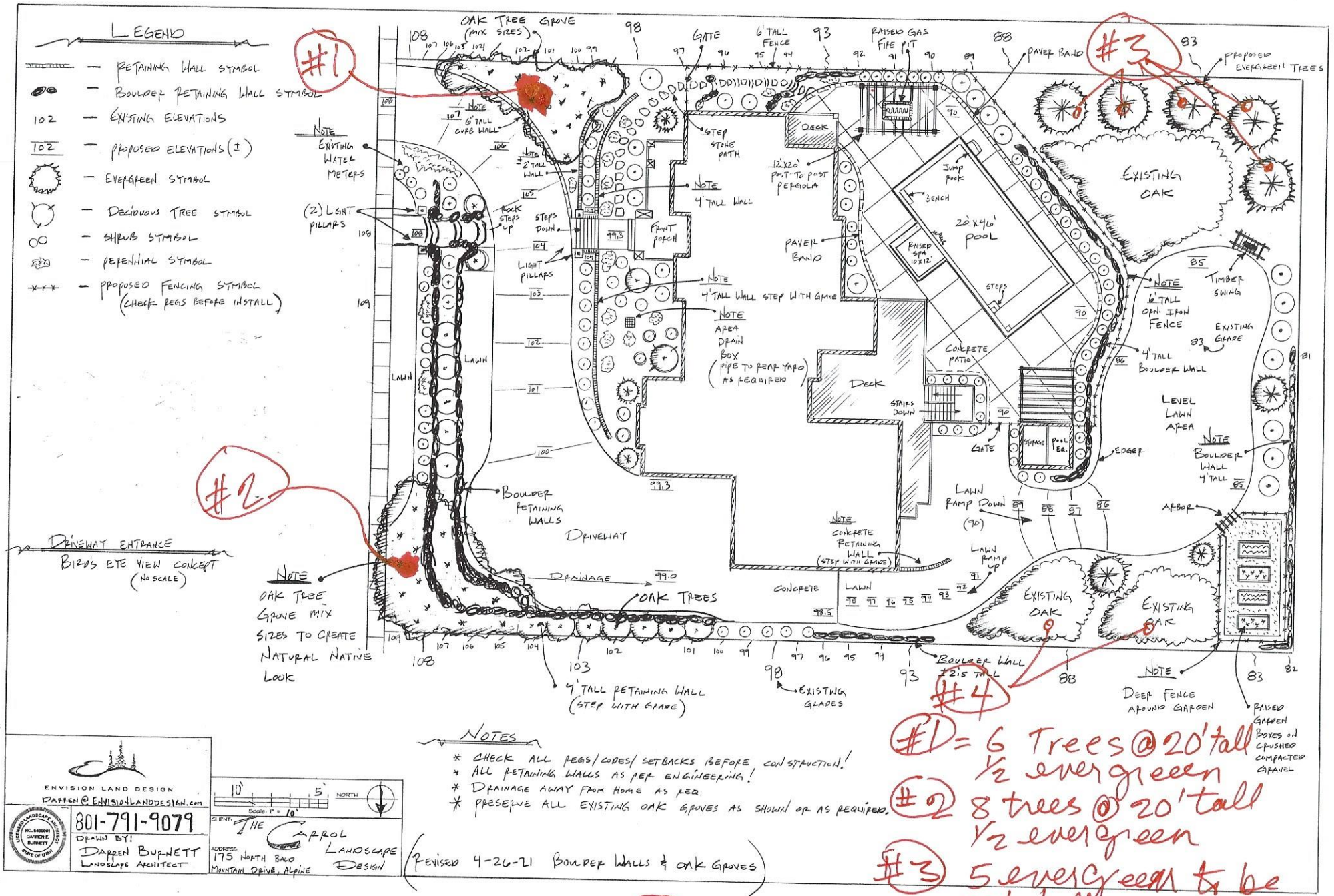


## NOTES

* CHECK ALL REQS/CODES/SETBACKS BEFORE CONSTRUCTION!
* ALL RETAINING WALLS AS PER ENGINEERING!
* DRAINAGE AWAY FROM HOME AS REQ.
* PRESERVE ALL EXISTING OAK GROVES AS SHOWN OR AS REQUIRED.

(REVISED 4-26-21 BOULDER WALLS & OAK GROVES)

#1 = 6 Trees @ 20' tall ½ evergreen

#2 8 trees @ 20' tall ½ evergreen

#3 5 evergreen to be 20' tall

#4 6 trees to be 20' tall ½ to be evergreen


ENVISION LAND DESIGN
DARREN@ENVISIONLANDDESIGN.com
801-791-9079
DRAWN BY: DARREN BURNETT
LANDSCAPE ARCHITECT
LICENSED LANDSCAPE ARCHITECT NO. 5405001 DARREN F. BURNETT STATE OF UTAH


Scale: 1" = 10'

CLIENT: THE CARROL LANDSCAPE DESIGN

ADDRESS: 175 NORTH BALD MOUNTAIN DRIVE, ALPINE

# CARROLLS // EXTERIOR SELECTIONS

REMEDY
furniture & design center

## Stone



Moscato Tumbled
Merrillstone

## Roofing



Presidential
Designer Shingles
Color: weathered wood



Corbel - Stain TBD

## Hardie

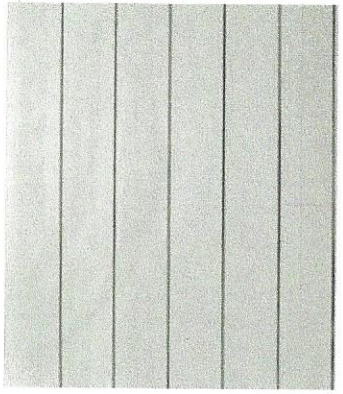

Board and batten
Textured
Vertical

## Home Color



Sherwin-Williams
Intellectual Gray
SW7045

## Fascia

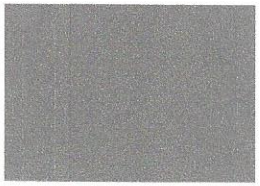

8"
Hardie
CMG Charcoal

## Soffit

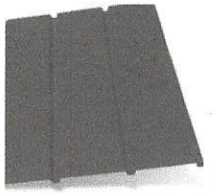

10"
Hardie
CMG Charcoal
(to match fascia)

## Rain Gutters



CMG Black

## Drip Edge



CMG Black

## Windows

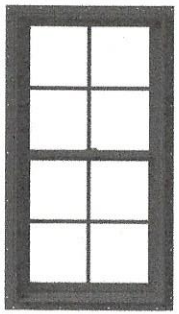

Kolbe
Steel Gray

## Metal Roofing

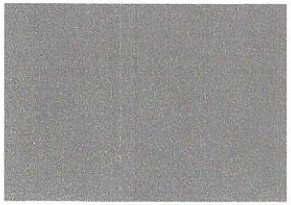

CMG
Charcoal

## LEGEND

- RETAINING WALL SYMBOL
- BOULDER RETAINING WALL SYMBOL
- 102 — EXISTING ELEVATIONS
- 102 — PROPOSED ELEVATIONS (±)
- EVERGREEN SYMBOL
- DECIDUOUS TREE SYMBOL
- SHRUB SYMBOL
- PERENNIAL SYMBOL
- PROPOSED FENCING SYMBOL (CHECK REGS BEFORE INSTALL)

OAK TREE GROVE (MIX SIZES)

NOTE: EXISTING WATER METERS

(2) LIGHT PILLARS

NOTE: 6' TALL CURB WALL

NOTE: 2' TALL WALL

ROCK STEPS UP

STEPS DOWN

LIGHT PILLARS

FRONT PORCH

STEP STONE PATH

NOTE: 4' TALL WALL

NOTE: 4' TALL WALL STEP WITH GRADE

NOTE: AREA DRAIN BOX (PIPE TO REAR YARD AS REQUIRED)

GATE

6' TALL FENCE

RAISED GAS FIRE PIT

PAVER BAND

PROPOSED EVERGREEN TREES

DECK

12'X20' POST TO POST PERGOLA

JUMP ROCK

BENCH

20'X46' POOL

RAISED SPA 10'X12'

STEPS

PAVER BAND

EXISTING OAK

NOTE: 6' TALL ORN. IRON FENCE

TIMBER SWING

EXISTING GRADE

4' TALL BOULDER WALL

CONCRETE PATIO

DECK

STAIRS DOWN

GATE

STORAGE

POOL EQ.

EDGER

LEVEL LAWN AREA

NOTE: BOULDER WALL 4' TALL

LAWN

LAWN RAMP DOWN (90)

LAWN RAMP UP

ARBOR

NOTE: CONCRETE RETAINING WALL (STEP WITH GRADE)

CONCRETE

LAWN

EXISTING OAK

EXISTING OAK

LAWN

BOULDER RETAINING WALLS

DRIVEWAY

DRAINAGE

OAK TREES

NOTE: OAK TREE GROVE MIX SIZES TO CREATE NATURAL NATIVE LOOK

4' TALL RETAINING WALL (STEP WITH GRADE)

EXISTING GRADES

BOULDER WALL 12'S TALL

NOTE: DEEP FENCE AROUND GARDEN

RAISED GARDEN BOXES ON CRUSHED COMPACTED GRAVEL

DRIVEWAY ENTRANCE

BIRD'S EYE VIEW CONCEPT (NO SCALE)

## NOTES

* CHECK ALL REGS/CODES/SETBACKS BEFORE CONSTRUCTION!
* ALL RETAINING WALLS AS PER ENGINEERING!
* DRAINAGE AWAY FROM HOME AS REQ.
* PRESERVE ALL EXISTING OAK GROVES AS SHOWN OR AS REQUIRED.


ENVISION LAND DESIGN
DARREN@ENVISIONLANDDESIGN.com
801-791-9079
LICENSED LANDSCAPE ARCHITECT NO. 5409901 DARREN F. BURNETT STATE OF UTAH
DRAWN BY: DARREN BURNETT
LANDSCAPE ARCHITECT


Scale: 1" = 10'

CLIENT: THE CARROL LANDSCAPE DESIGN

ADDRESS: 175 NORTH BALD MOUNTAIN DRIVE, ALPINE

(REVISED 4-26-21 BOULDER WALLS & OAK GROVES)

# (No subject)

Joel Kester <sundiallc@outlook.com>

Tue 5/11/2021 2:43 PM

**To:** Austin Roy <aroy@alpinecity.org>
**Cc:** Stephen And Karinne Carroll <oneoftheseven@yahoo.com>; Karinne Carrol <karinnecarroll@yahoo.com>; Lydia Yeates <lydia@raykonconstruction.com>; James Carrick Cell <james@driftwoodplans.com>; stacyandjoey@remedy2design.com <stacyandjoey@remedy2design.com>; Savannah Kaelin <savannah@remedy2design.com>; Austin Roy <aroy@alpinecity.org>; Shane Sorensen <ssorensen@alpinecity.org>; Casey Cloward <casey@raykonconstruction.com>

4 attachments (15 MB)

carroll land.pdf; carroll plans.pdf; carroll ele-1.jpg; carroll ele-2.jpg;

Austin

The Architectural Design Committee has reviewed the plans of the Carroll home and have approved them with the following comments:

1. The home will be built according to the elevations in attachment #1 and #2. The stone color will be Moscato Tumbled Merrillstone. The roof shall be Weathered Wood by Presidential Designer. The metal roof trim will be CMG Charcoal. The soffit, fascia and rain gutter to be CMG Charcoal or GMG black. The hardy board color shall be Intellectual Gray SW70045. The window trim shall be Steet Gray by Kolbre. The wood posts and corbels will be dark brown. Note: All the colors noted here are on attachment #3 except for the dark wood trim for the posts and corbels, and I have the sample of that color and it is darker than the wood trim noted on the two elevations which show a lighter color and are noted to be "TBD" which is not our understanding of what has been approved.
2. This lot was previously cleared by another owner in violation of the CC&Rs and to insure there is some level of re-vegetation to help the home blend into the neighborhood, we would like an agreement from the Owners that the landscaping be done with some mature trees. The attached landscaping plan was not specific as to the size of the trees. As noted on the landscaping plan, we would like it guaranteed that in area #1 there are a minimum of 6 trees with a height of at least 20 feet and 1/2 are evergreen trees, in area #2 there are a minimum of 8 trees with a height of at least 20 feet and 1/2 of them are evergree trees, in area #3 the 5 evergreen trees are a minimum of 20 feet, and in area #4 there are a minimum of 6 trees with a height of at least 20 feet and 1/2 of them are evergreen trees.

If the Owners of the home agree to the above conditions, the Committee recommends that a height variance be given for the construction of the home as shown on attachment #4. The specifics of that variance is that the Top Back of Curb at a mid-point of the home is 5190 feet in elevation and the Top of Foundation of the home at the East side of the home at mid-point is 5182.5 feet in elevation. This results in **a relative difference between those two points being 7.5 feet**.

We would support the City giving this variance to the height limitation imposed by the City and the subdivision CC&Rs.

Please let me know if you have any further questions.

Thanks

Joel

May 4, 2021

Stephen and Karinne Carroll
13864 S. Timoney Rd.
Draper, UT 84020

Alpine City Council
20 North Main Street
Alpine, UT 84004

Dear Council,

We are very pleased to be anticipating building our new home at 175 N. Bald Mountain Dr in the beautiful city of Alpine.

We have endeavored with our architect to create a home design that is suitable for the lot and for our surrounding neighbors.

We have designed a home that we believe is appropriate for the surrounding views, that includes a loft space. We have strategically placed the home on the lot to create an appropriate grade for the driveway considering the terrain.

We ask the committee to accept the proposed height variance for the home so as to not require placing the home deeper in the ground thus maintaining the correct driveway approach and also the deck and view esthetics of the home. During our design, we have worked in concert with the Willow Canyon Architectural Review Committee to create the right home for the location. We have assured the Committee that we will strive to place trees and foliage, etc., so that the home and landscape are fitting and natural for the environment.

Thank you,

Stephen and Karinne Carroll

# ALPINE CITY COUNCIL AGENDA

**SUBJECT: Zone Change – 183 N 100 W**

**FOR CONSIDERATION ON: 25 May 2021**

**PETITIONER: Aaron Wood with Redwood Dental**

**ACTION REQUESTED BY PETITIONER: Approve the proposed zone change.**

**BACKGROUND INFORMATION:**

The owner of the property located at 183 North 100 West is proposing a zone change for this property. The property is currently zoned as TR-10,000 residential single family and it is proposed that the property be rezoned as Business Commercial.

The petitioner would like to use the existing structure, with a few minor renovations, as a dentist office. Property already has sufficient parking for the proposed use and is adjacent to the Business Commercial zone. There currently exist other businesses on 200 North, including Purple, Snoasis, and Balance Dance Studio.

On Tuesday May 18, 2021, the Planning Commission recommended that the proposed zone change be denied.

> ***MOTION:*** *Commission Member Ed Bush moved to recommend to DENY the zone change for the Aaron Wood Redwood Dental office.*
>
> *John MacKay seconded the motion. There were 5 Ayes and 0 Nays (recorded below). The motion passed.*
>
> | ***Ayes:*** | ***Nays:*** |
> |---|---|
> | *Ed Bush* | *None* |
> | *Ethan Allen* | |
> | *John MacKay* | |
> | *Jane Griener* | |
> | *Troy Slade* | |

**MODEL MOTIONS**

**SAMPLE MOTION TO APPROVE:**
I move that the zone change be approved as proposed.

**SAMPLE MOTION TO APPROVE WITH CONDITIONS:**
I move that the zone change be approved with the following conditions/changes:

- ***Insert Finding***

**SAMPLE MOTION TO TABLE/DENY:**
I move that the zone change be tabled/denied based on the following:

- ***Insert Finding***


N Matisse Ln
Knot and Pine
Balance Studio
Alpine City Engineer
200 N
Zone Change - Alan Wood Dentist
ABC Preparatory
Montessori
Canyon Academy
The Church of
Jesus Christ of Latter...
N 100 W
N 100 E St
N 200 E
The Utah Loan Guy
- Lance Mendenhall
W 150 N St
N Main St
W 100 N
E 100 N
Historic Pioneer
Relic Hall
Alpine City Hall
W Center St
E Center St
Hailey Xoes Hair

Hello, my name is Aaron Wood and I'm married to Melissa Snyder Wood. We both moved to Alpine as children in the early 1990's and graduated from Lone Peak High School in 2000 & 2002 respectively. We both attended BYU, and I served an LDS mission for 2 years in San Jose, California. We married in 2005 and moved our family to Texas in 2006 to pursue a career in dentistry. After being away for almost 14 years, we made the decision to move back to the mountains and our family here in Alpine.

We loved growing up here and were thrilled to move back with our four children ages 13, 11, 8, and 5. We live just north of Creekside Park because it's halfway between my parents and Melissa's parents.

When we left Texas in 2019, we were leaving behind a dental practice in Texas with 3 partners and a staff of 40 employees. I worked in the office 5/6 days a week and was looking for a drastic change of pace. We made the big move and purchased Highland Dental, a small practice in the Highland Macey's shopping center, with 80 patients in the summer of 2019. I have one employee and we enjoy seeing patients 1 to 2 days a week, many of which are friends and family.

Now that we've settled here, we decided that we wanted to look for a place we could purchase in Alpine rather than leasing in our current location in the strip mall. With the number of properties available for purchase in the commercial district being extremely limited in Alpine, we've been unsuccessful at finding anything. I've walked up and down Main Street knocking doors to see if anyone is interested in selling their homes, to no avail. So, when the home came on the market at 183 North 100 West, located across the street from the approved commercial zone, we decided to purchase this charming home and then work with the city and community with the goal of getting an approval for our dental office.

We aren't your average dental office and our plan is to keep the same historic character to the home and keep it as is (well, we'd like to revive the garden & add a few more plants and shrubs), we'd want a small sign near the front flower beds, and we'd continue seeing patients 1 to 2 days per week. My office is extremely small with a staff of me and my one assistant, and I couldn't be happier.

We chose to return to our hometown in Utah because we wanted to raise our family where we grew up surrounded by the people we love. We are excited at the prospect of opening our office in Alpine and continuing to support and give back to the town that raised us.

* 183 NORTH 100 WEST

PROPOSED ADDITION TO RED COMMERCIAL ZONE

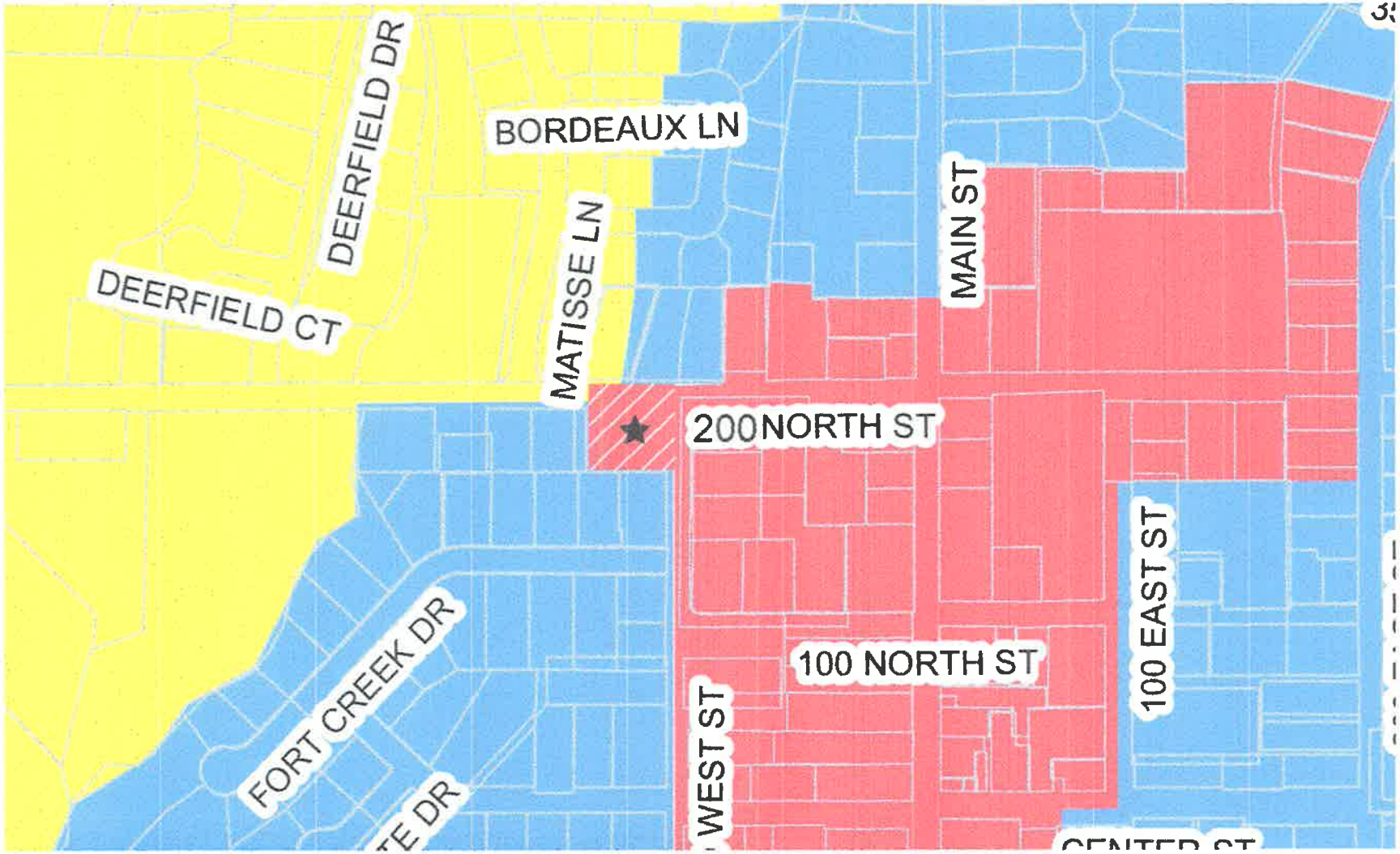

**BEFORE**



**AFTER**



## 3.01.090 Amendments To The Zoning Ordinance Or Zoning Map

1. **Amendments to the Zoning Ordinance**. Amendments to the Zoning Ordinance may be initiated by the City Council, the Planning Commission, the staff, or by an owner of real property in the area included in the proposed amendment.

   Amendments to the Zoning Ordinance:

   a. Shall first be submitted to the Planning Commission for its review and recommendation.

   b. The Planning Commission shall provide appropriate notice and hold a public hearing on proposed amendments to the zoning ordinance before making a recommendation to the City Council. The Planning Commission may hold additional public hearings if deemed necessary or appropriate by the Planning Commission.

   c. The Planning Commission shall prepare and make a recommendation to the City Council on proposed amendments to the zoning ordinance that represents the Planning Commission's recommendation for regulating the use and development of land within all or any part of the area of the City.

   d. The City Council shall consider each proposed amendment to the zoning ordinance recommended by the Planning Commission. The City Council shall have the option to hold a public hearing(s).

   e. The City Council may adopt or reject amendments to the zoning ordinance either as proposed by the Planning Commission or after making any revisions the City Council considers appropriate.

2. **Amendments to the Zoning Map (Zone Change)**. Amendments to the Zoning Map may be initiated by the City Council, the Planning Commission, the staff, or by an owner of real property in the area included in the proposed amendment.

   Any application to change the boundary of a zone shall include an accurate map or other sufficient legal description of the area proposed for change. Applicants shall submit ten (10) copies of all required documentation to the City Planner at least fourteen (14) days prior to the public hearing.

   Amendments to the Zoning Map (Zone Change):

   a. Shall first be submitted to the City Planner for its review before an applicant may apply to the Planning Commission.

   b. If the applicant chooses to apply to the Planning Commission for a proposed zone change, the applicant shall pay the associated fee and the City Recorder shall set a public hearing for the Planning Commission on the proposed amendment to the zoning map, and shall provide appropriate notice for said public hearing. The public hearing shall be held before the Planning Commission may make a recommendation to the City Council. The Planning Commission may hold additional public hearings if deemed necessary or appropriate by the Planning Commission.

   c. The Planning Commission shall prepare and make a recommendation to the City Council on each proposed amendment to the zoning map that comes before the Planning Commission.

   d. The City Council shall consider each proposed amendment to the zoning map recommended by the Planning Commission. The City Council shall have the option to

hold a public hearing(s) on the proposed zone change.

e. The City Council may approve or deny the proposed amendment to the zoning map, either as proposed by the Planning Commission or after making any revision the City Council considers appropriate.

3. **Written Notification of Property Owners**. At least (14) fourteen days prior to the public hearing held by the Planning Commission, the applicant for an amendment to the zone map shall submit to the Alpine City Planner a list of all property owners within five hundred (500) feet of the boundaries of the proposed zone change, along with stamped envelopes addressed to each of the property owners.

   At least ten (10) days prior to the public hearing held by the Planning Commission, City staff will mail, in the envelopes provided by the applicant, written notification of the requested zone change with the following information:

   a. Address or location of the property for which a zone change is requested;

   b. The current zoning designation and proposed zoning;

   c. Name of the property owner;

   d. Number of acres; and

   e. Date, time, and place of the public hearing at which the zone change will be considered.

      The written notification shall be required only for the first public hearing held by the Planning Commission. It shall not be required for any additional public hearings that may be held.

4. **Sign**. In addition to the mailing, the property owner shall erect a sign of sufficient durability, and print and size quality that is reasonably calculated to give notice to passers-by. The sign shall be required only for the first public hearing held by the Planning Commission. It shall not be required for any additional public hearings that may be held.

   The sign:

   a. shall be 4 ft. (H) x 8 ft. (W);

   b. is to be raised no more than six (6) feet in height from the ground;

   c. shall be posted five (5) feet inside the property line in a visible location on the property proposed for the zone change; and

   d. shall be posted at least fourteen (14) days prior to the public hearing at which the zone change will be presented to the Planning Commission.

      The following information shall be on the sign:

      i. Current zoning of the property and proposed zoning;

      ii. Number of acres; and

      iii. Date, time, and place of the first public hearing at which the zone change will be considered by the Planning Commission.

(Amended by Ordinance 2000-03, 3/28/00; 2007-04, 4/10/07)

HISTORY
*Amended by Ord. 2020-18 on 10/13/2020*

## Map Legend

- Urban/Wildland Interface Boundary Line
- Alpine City Boundary
- Business Commercial
- Senior Housing Overlay Zone
- TR-10,000 (1/4 acre)
- CR-20,000 (1/2 acre)
- CR-40,000 (1 acre)
- CE-5 (5 acre)

# Alpine City Zoning Map

0 0.125 0.25 0.5 0.75 1 Miles

N W E S

Ordinance No. 2020-15
July 28, 2020

# ALPINE CITY COUNCIL AGENDA

**SUBJECT: Open Space Purchase Proposal – 539 N. Pfeifferhorn Drive**

**FOR CONSIDERATION ON: 25 May 2021**

**PETITIONER: Michael McArthur**

**ACTION REQUESTED BY PETITIONER: Approve the proposed purchase of Alpine City open space.**

**BACKGROUND INFORMATION:**

The petitioner, Michael McArthur, has submitted a request to purchase approximately 1,738 square foot piece of open space. The property is located at 539 North Pfeifferhorn Drive.

The open space in question includes an easement with a large gas pipeline that runs through it and has been vacated or retired by Dominion Energy. The easement does allow for certain things to be built within it, such as: a driveway, curbing, and landscaping (no deep-rooted trees permitted). The piece of open space also contains a ground moisture box that would have to remain, but any future property owner would be able to landscape around it. The City sees the open space as a possible location for a future trailhead with parking.

In January of 2019, the City Council approved a land swap with the previous landowner to exchange a 5,190 square foot piece of private property for a 5,190 square foot piece of public open space. However, the previous landowner never ended up recording an amended plat to this effect. Therefore, the County records still show the same boundaries as before. The property has since been sold and the new owner would like to purchase a piece of the open space rather than the exchange the was approved in the past.

The petitioner is seeking to purchase public open space to add frontage to his existing lot. The public open space proposed for purchase runs from the northeast corner of his property to 5 feet past the moisture box (see exhibit). The petitioner feels this would be the highest and best used of the land as it would be landscaped, and the moisture box would be hidden from the street view. Also, the petitioner does not feel like the proposed purchase would interfere with the City's future planned trailhead in this location (if the City did not want to put a trailhead in this location the petitioner would be interested in purchasing even more of the open space).

Any alteration to public open space requires Planning Commission recommendation, and City Council approval.

Article 3.16.4.2 says:

> *Land included in these parks shall not be materially changed, improved, altered, disposed of in any manner or used for any other purpose except after a recommendation of the Planning Commission following a public hearing and by a super majority vote of the City Council (4 positive votes out of 5 City Council members are required). A material change shall include, but is not limited to, a*

*change to the park's present and essential defining characteristics, creation of or improvement of roadways or parking lots within the park.*

The petitioner is proposing to offer $8,094 for approximately 1,738 square feet of public open space. According to the petitioner this value was based on the most recent tax information, which values the property at $9.31 per square foot. The petitioner is proposing that the purchase price would be 50% of valuation since he feels that the land is unbuildable, and therefore less valuable. However, staff does not agree that the property has diminished value. In fact, the open space would greatly enhance the value and utility of the petitioner's property. Therefore, staff would recommend that the City ask full price or fair market value for the 1,738 square feet of public open space (based on the $9.31 per square foot valuation mentioned above, the value would be closer to $16,180.78 or $405,543.60 per acre).

The Planning Commission reviewed this proposal on May 18, 2021 and recommended that the City approve the sale of 1,738 square feet of public open space as proposed.

***MOTION:*** *Commission Member Ethan Allen moved to recommend that the proposal to sell approximately 1,738 square feet of public open space be approved as proposed.*

*Troy Slade seconded the motion. There were 5 Ayes and 0 Nays (recorded below). The motion passed.*

| ***Ayes:*** | ***Nays:*** |
|---|---|
| *Jane Griener* | *None* |
| *John MacKay* | |
| *Ethan Allen* | |
| *Ed Bush* | |
| *Troy Slade* | |

**STAFF RECOMMENDATION:**
Approve the proposed purchase of public open space.

**SAMPLE MOTION TO APPROVE:**
I move that the proposal to sell approximately 1,738 square feet of public open space be approved as proposed.

**SAMPLE MOTION TO APPROVE WITH CONDITIONS:**
I move that the proposal be approved with the following conditions:

- ***Insert Finding***

**SAMPLE MOTION TO TABLE/DENY:**
I move that the proposal be denied (or tabled) based on the following:

- ***Insert Finding***

Dominion Energy Utah  Dominion Energy Wyoming  Dominion Energy Idaho
Property & Right-of-Way
1140 West 200 South, Salt Lake City, UT 84104
Mailing Address:
P.O. Box 45360, Salt Lake City, UT 84145-0360
DominionEnergy.com

October 30, 2018

Britney Green
White Diamond Homes, LLC

RE: Dominion Energy Easement
Lot 19, Swiss One Subdivision
Alpine, UT

Dear Britney,

This letter is in follow up to my October 22, 2018 on-site meeting with Jaden White at the above referenced property in Alpine, Utah. Jaden and I discussed the Dominion Energy Utah (Dominion) easement the runs adjacent to the current northeast lot line and the history of the gas pipelines in the area.

Dominion has no objections to the change in lot lines and exchange of property between the developer and Alpine City.

It is okay for certain types of things to be installed and or constructed in the easement, such as driveways, curbing, landscaping (no deep rooted trees), etc. No buildings, or structures with a concrete footing are allowed in the easement, with the retired pipeline in place.

None of the retired pipeline can be removed without first entering into an agreement with Dominion.

There is a cathodic protection facility located on the easement that will need to remain in place. This equipment can be included in a landscape plan after review by Dominion.

Any excavation or construction in the easement requires prior approval and a Dominion representative on site.

Please call if you have any questions concerning the easement or the pipelines in this area.

Sincerely,

Rick Hellstrom
Land Agent Consultant
801-232-8153

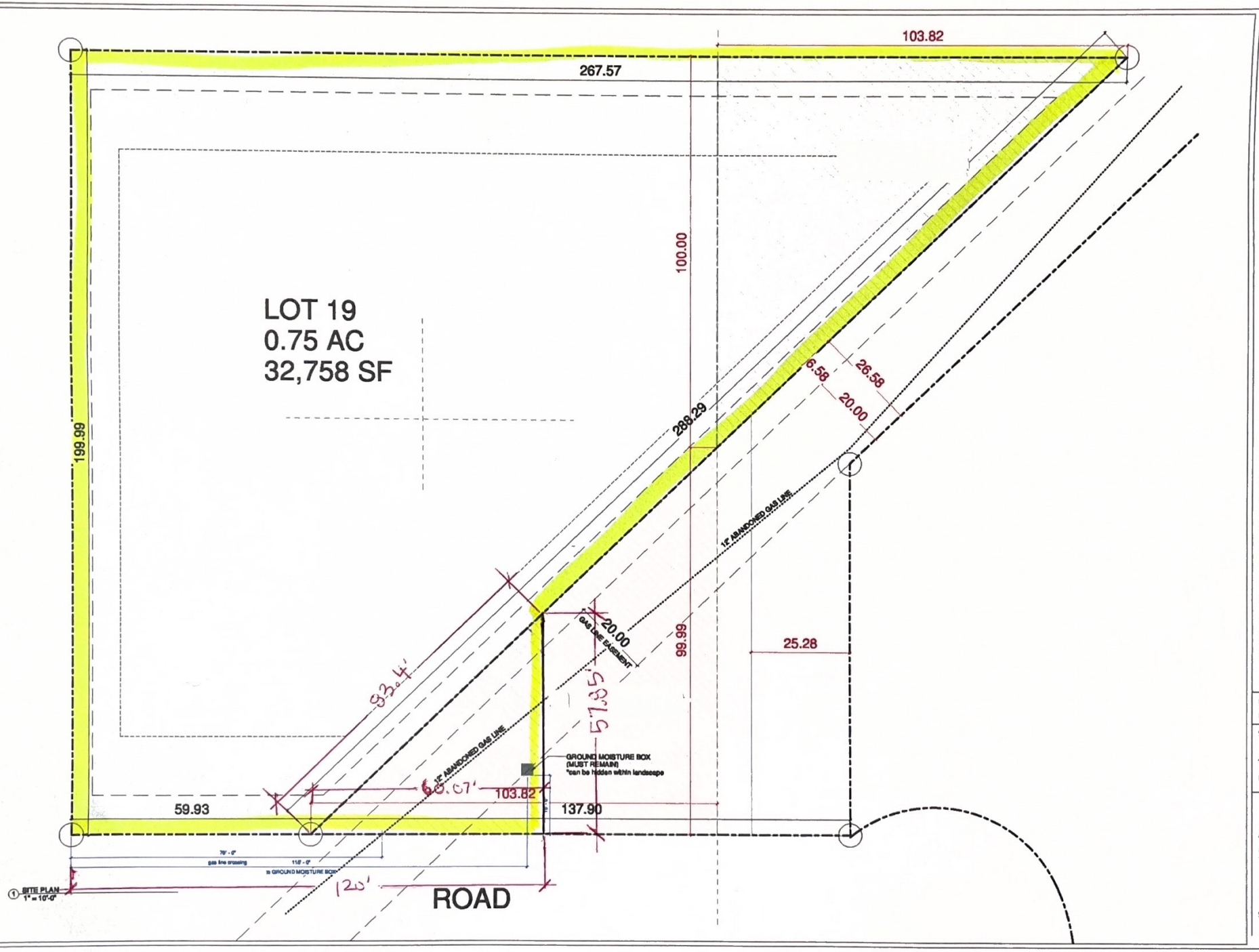


McARTHUR HOME

# LOT ADJUSTMENT

SWISS ONE ESTATES
LOT 19

DRAFT OF
LOT ADJUSTMENT

SWISS ONE ESTATES

10/31/18 1:17:48 PM

LOT 19

**A101**
SITE PLAN

SCALE: 1" = 10'-0"

PROPOSED AREA TO PURCHASE = 1,738 SF

## 3.16.040 Special Provisions

1. All public parks in the City of Alpine as noted on the attached map, hereby made a portion of this Ordinance, are included in this Zone and are subject to all of the provisions of this Zone.
2. Land included in these parks shall not be materially changed, improved, altered, disposed of in any manner or used for any other purpose except after a recommendation of the Planning Commission following a public hearing and by a super majority vote of the City Council (4 positive votes out of 5 City Council members are required). A material change shall include, but is not limited to, a change to the park's present and essential defining characteristics, creation of or improvement of roadways or parking lots within the park.

(Ord. 1998-20, 11/24/98; amended Ord. 2007-12, 08/14/07; Ord. 2016-07, 07/26/16; Ord. 2016-24, 11/09/16)

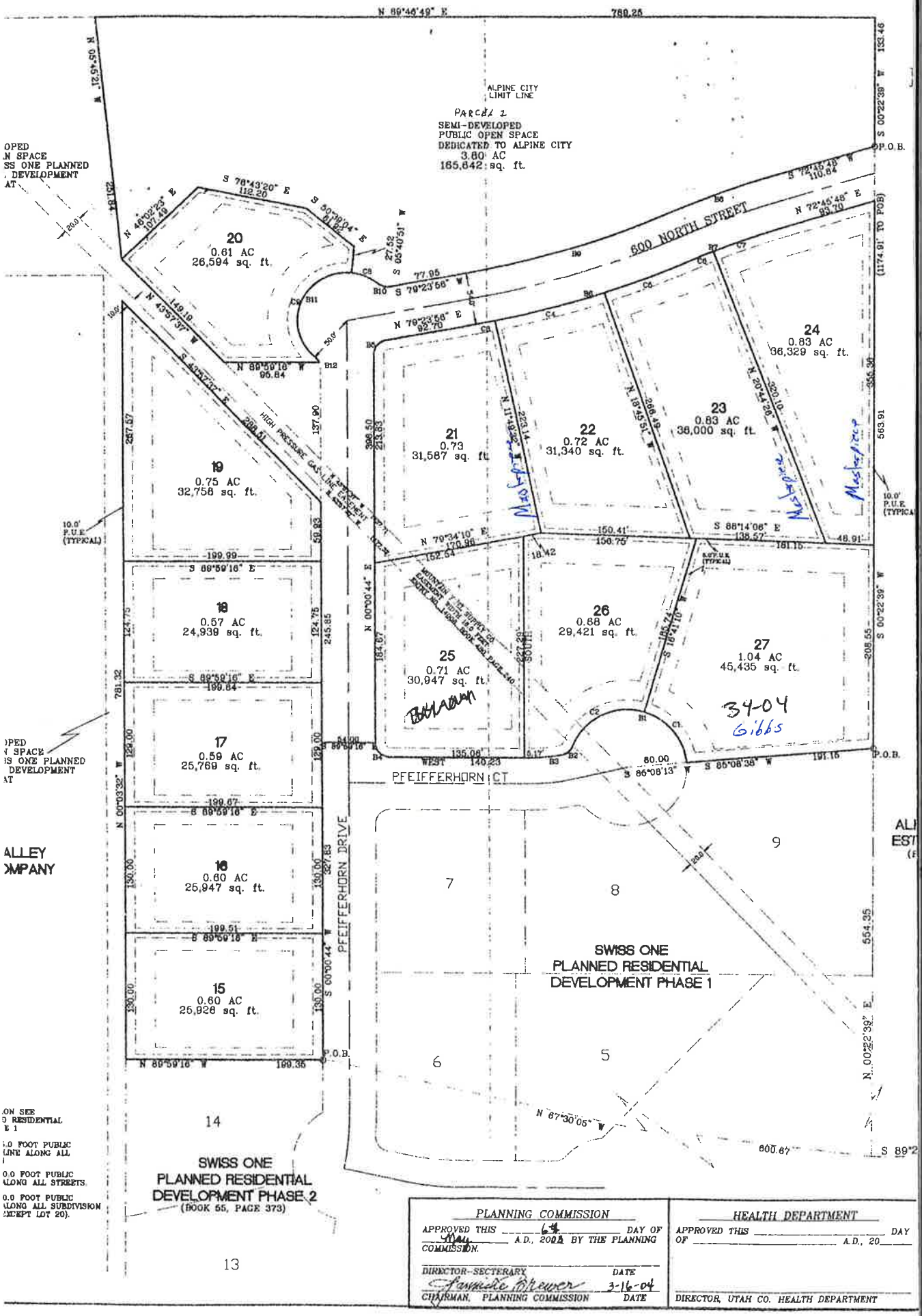


PLANNING COMMISSION

APPROVED THIS 6th DAY OF May A.D., 2004 BY THE PLANNING COMMISSION.

DIRECTOR-SECTERARY DATE

Jannette Brewer 3-16-04

CHAIRMAN, PLANNING COMMISSION DATE

HEALTH DEPARTMENT

APPROVED THIS _____ DAY OF _____ A.D., 20__

DIRECTOR, UTAH CO. HEALTH DEPARTMENT

# ALPINE CITY COUNCIL AGENDA

**SUBJECT: Ordinance 2021-12 Location of Retaining Walls**

**FOR CONSIDERATION ON: 25 May 2021**

**PETITIONER: Staff**

**ACTION REQUESTED BY PETITIONER: Approve the proposed amendment to the Development Code.**

**BACKGROUND INFORMATION:**

Recently, the City Council approved changes to accessory buildings with regards to building height and location. Specifically, the code was changed to require documentation from utility companies when an accessory structure would be allowed within a public utility easement (aka – P.U.E.). Staff realized that the retaining wall ordinance needed updated to require the same documentation for walls within the P.U.E. This verbiage, along with some other minor modifications to the ordinance, is proposed for your review and approval.

On Tuesday May 18, 2021, the Planning Commission recommended that Ordinance 2021-12 be approved as proposed.

> ***MOTION:*** *Commission Member Troy Slade moved to recommend that Ordinance 2021-12 Retaining Walls be approved as proposed.*
>
> *John MacKay seconded the motion. There were 5 Ayes and 0 Nays (recorded below). The motion passed unanimously.*
>
> | ***Ayes:*** | ***Nays:*** |
> |---|---|
> | *Jane Griener* | *None* |
> | *Ed Bush* | |
> | *John MacKay* | |
> | *Ethan Allen* | |
> | *Troy Slade* | |

**STAFF RECOMMENDATION:**
Approve the amendments as proposed.

**SAMPLE MOTION TO APPROVE:**
I move that Ordinance 2021-12 be approved as proposed.

**SAMPLE MOTION TO TABLE/DENY:**
I move to table/deny Ordinance 2021-12 based on the following:

- ***Insert Finding***

**ALPINE CITY**
**ORDINANCE 2021-12**

**AN ORDINANCE ADOPTING AMENDMENTS TO ARTICLE 3.32.030 OF THE ALPINE CITY DEVELOPMENT CODE PERTAINING TO THE LOCATION OF RETAINING WALLS.**

**WHEREAS,** The Planning Commission held a public hearing on May 18, 2021, regarding proposed amendments to Article 3.32.030 of the Development Code; and

**WHEREAS,** on May 25, 2021, the Alpine City Council has deemed it in the best interest of Alpine City to update the Retaining Wall ordinance; and

**WHEREAS,** the Alpine City Planning Commission has reviewed the proposed Amendments to the Development Code, held a public hearing, and has forwarded a recommendation to the City Council; and

**WHEREAS,** the Alpine City Council has reviewed the proposed Amendments to the Development Code:

**NOW THEREFORE,** be it ordained by the Council of the Alpine City, in the State of Utah, as follows: The amendments to Article 3.32.030 will supersede Article 3.32.030 as previously adopted. This ordinance shall take effect upon posting.

**SECTION 1:** **AMENDMENT** "3.32.030 Purpose And Intent" of the Alpine City Development Code is hereby *amended* as follows:

A M E N D M E N T

3.32.030 Purpose And Intent

The purpose of this ordinance and the intent of the City Council in its adoption is to promote the health and safety and general welfare of the present and future inhabitants of Alpine City. The ordinance will accomplish this purpose by:

1. **Building Permit Required**. Except as otherwise provided in Part 2, all retaining walls require a building permit prior to construction or alteration. Permit applications shall be processed and issued in accordance with building permit procedures and applicable provisions of this section. Building permit review fees will be assessed and collected at the time the permit is issued.
2. **Building Permit Exemptions**. The following do not require a building permit:
    a. Retaining walls less than four feet in exposed height with less than 10H:1V (Horizontal: Vertical) front and back slopes within ten feet of the wall;
    b. Non-tiered retaining walls less than four feet in exposed height with back

slopes flatter than or equal to 2H:1V and having front slopes no steeper than or equal to 4H:1V;

c. Double tiered retaining walls less than four feet in exposed height per wall and which have front slopes and back slopes of each wall no steeper than or equal to 10H:1V within ten feet of the walls, 2 foot spacing between front face of the upper wall and back edge of the lower wall;

d. Retaining walls less than 50 square feet in size, less than 4 feet tall.

3. **Geologic Hazards**. If construction of any retaining wall, which requires a building permit, occurs within sensitive land areas as outlined by ~~DCA~~ ADC 3.12, then all analyses required for the design of retaining walls or rock protected slopes shall follow the Sensitive Lands Ordinance, specifically in regards to limits of disturbance and the required geologic hazard and engineering geology reports (~~DCA~~ ADC 3.12.060 Part 4)
4. **Engineer Design Required**. All retaining walls required to obtain a building permit shall be designed by an engineer licensed by the State of Utah.
5. **Location, Height, Separation and Plantings**

a. Location. The retaining wall will not be placed on land designated as a recorded easement, such as a utility or trail easement, unless the owner(s) of said easement agree(s) to allow the encroachment. Documentation of the agreement shall be provided to the City.

b. For the purposes of this Part, the height of a retaining wall is measured as exposed height (H) of wall of an individual tier.

c. A single retaining wall shall not exceed nine feet in exposed height if it can be seen from the nearest public right-of-way or adjacent properties to which it is exposed.

d. Terracing of retaining walls is permitted where justified by topographic conditions, but the combined height of all walls shall not exceed a height of 18 feet if exposed or can be seen from the nearest public right-of-way or adjacent properties. Walls with a separation of at least 2H (H of largest of 2 walls) from face of wall to face of wall shall be considered as separate walls for analysis purposes and applicability to this ordinance. If walls are within 2H (H of largest of 2 walls), then the combined height of the terrace shall be used for limitation of height.

e. In a terrace of retaining walls, a minimum horizontal separation of H/2 (H of largest of 2 walls) is required as measured from back of lower wall to face of higher wall. If the walls are not viewable from the nearest public right-of-way or adjacent properties, then there is no limitation of height.

f. The view of the nearest public right-of-way or adjacent property shall be verified by the City Official during the review process and prior to permit for construction.

g. For terraced walls viewable from the nearest public right-of-way, the horizontal separation between walls shall be planted with a minimum of five shrubs for every 20 linear feet of planting area. The size of the shrubs shall be less than one-half the width of the terrace. Shrubs shall be drip irrigated to minimize erosion, and when possible, the use of drought resistant vegetation

shall be used to minimize future watering needs. The responsibility of drip irrigation resides with the property owner on which the majority of the structure is built. If the majority of the structure is built on private or public open space, a pressurized irrigation service and drip irrigation system shall be installed by the Developer and the future owner(s) of the open space shall be responsible for the drip irrigation maintenance and cost of operation after the warranty period expires

h. Walls greater than four (4) feet in height (H) placed within H/2 of an adjacent property line, which would create a drop-off for the adjacent property, shall install a fence along the top of the wall in accordance with ADC 3.21.060.
i. No retaining wall component shall extend beyond the property lines unless written permission is obtained from the affected property owner.

6. **Submittals**. The following documents and calculations prepared by a licensed engineer of the State of Utah shall be submitted with each retaining wall building permit application:
    a. profile drawings if the retaining wall is longer than 50 lineal feet, with the base elevation, exposed base elevation and top of wall labeled at the ends of the wall and every 50 linear feet or change in grade;
    b. cross-sectional drawings including surface grades and structures located in front and behind the retaining wall a distance equivalent to three times the height of the retaining wall, and if the retaining wall is supporting a slope, then the cross section shall include the entire slope plus surface grades and structures within a horizontal distance equivalent to one times the height of slope;
    c. a site plan showing the location of the retaining walls with the base elevation, exposed base elevation and top of wall labeled at the ends of wall and every 50 lineal feet or change in grade;
    d. a copy of the geotechnical report used by the design engineer. The geotechnical report shall include requirement of Part 6,e otherwise additional laboratory testing is required in Part 6,e;
    e. material strength parameters used in the design of the retaining wall, substantiated with laboratory testing of the materials as follows:
        i. for soils, this may include, but is not limited to, unit weights, direct shear tests, triaxial shear tests and unconfined compression tests;
        ii. if laboratory testing was conducted from off-site but similar soils within a 2000 foot radius of the proposed wall location, the results of the testing with similar soil classification testing needs to be submitted;
        iii. minimum laboratory submittal requirements are the unit weight of retained soils, gradation for cohesionless soils, Atterberg limits for cohesive soils, and shear test data;
        iv. soil classification testing shall be submitted for all direct shear or triaxial shear tests;
        v. if a Proctor is completed, classification testing shall be submitted with the Proctor result; and,
        vi. laboratory testing should be completed in accordance with applicable

American Society for Testing and Materials (ASTM) standards;

vii. for segmented block walls, the manufacturer's test data for the wall facing, soil reinforcement, and connection parameters shall be submitted in an appendix.

f. the design engineer shall indicate the design standard used and supply a printout of the input and output of the files in an appendix with factors of safety within the design standard used as follows:
    i. design calculations ensuring stability against overturning, base sliding, excessive foundation settlement, bearing capacity, internal shear and global stability;
    ii. calculations shall include analysis under static and seismic loads, which shall be based on the PGA as determined from probabilistic analysis for the maximum credible earthquake (MCE), with spectral acceleration factored for site conditions in accordance with the current IBC;
    iii. Mechanically Stabilized Earth (MSE) walls shall be designed in general accordance with current FHWA or AASHTO standards for design of Mechanically Stabilized Earth Walls and Reinforced Soil Slopes or the current National Concrete Masonry Association (NCMA) Design Manual for Segmental Retaining Walls;
    iv. rock walls shall be designed in general accordance with 2006 FHWA-CFL/TD-06-006 “Rockery Design and Construction Guidelines,” or current FHWA standard of care and;
    v. concrete cantilever walls shall be designed in general accordance with specifications provided in current American Concrete Institute or American Society of Civil Engineers standards and specifications.

g. a global stability analysis with minimum factors of safety of at least 1.50 under static conditions and at least 1.10 under seismic loading conditions as follows:
    i. factors of safety results shall be presented to the nearest hundredth;
    ii. seismic loads shall be based on the PGA as determined from probabilistic analysis for the maximum credible earthquake (MCE), with spectral acceleration factored for site conditions in accordance with the current IBC;
    iii. the cross-sectional view of each analysis shall be included, and the printout of the input and output files placed in an appendix; and,
    iv. the global stability analysis may be omitted for concrete cantilever retaining walls that extend to frost depth, that are less than nine feet in exposed height, absent of supporting structures within 30 feet of the top of the wall, and which have less than 10H:1V front and back slopes within 30 feet of the retaining structure.

h. a drainage design, including a free draining gravel layer wrapped in filter fabric located behind the retaining wall with drain pipe day-lighting to a proper outlet or weep holes placed through the base of the wall, however:
    i. a synthetic drainage composite may be used behind MSE walls if a materials specific shear testing is completed to determined friction

properties between the backfill and synthetic drainage composite;

ii. a synthetic drainage composite is not allowed behind rock walls;

iii. a synthetic drainage composite may be used behind the stem of the concrete cantilever walls;

iv. if the engineering can substantiate proper filtering between the retained soils and the drain rock, then the filter fabric may be omitted, and;

v. if the retaining wall is designed to withstand hydrostatic pressures or the retained soils or backfill is free-draining as substantiated through appropriate testing, then drainage material may be omitted from the design.

i. the design engineer's acknowledgement that the site is suitable for the retaining wall;

j. an inspection frequency schedule.

7. **Preconstruction Meeting**. At least 48 hours prior to the construction of any approved retaining wall, a preconstruction meeting shall be held as directed by the Building Official. The meeting shall include the Building Official, the design engineer, the contractor and the project or property owner. The preconstruction meeting can be waived at the discretion of the Building Official.
8. **Inspections and Final Report**. The design engineer shall make all inspections needed during construction. A final report from the design engineer shall state that the retaining wall was built according to the submitted design. The report shall include detail of the inspections of the wall in accordance with the inspection frequency schedule. All pertinent compaction testing shall also be included with the final report. The design engineer shall submit the final report to the Building Official to close out the permit.
9. **Maintenance**. All retaining walls shall be maintained in a structurally safe and sound condition and in good repair.

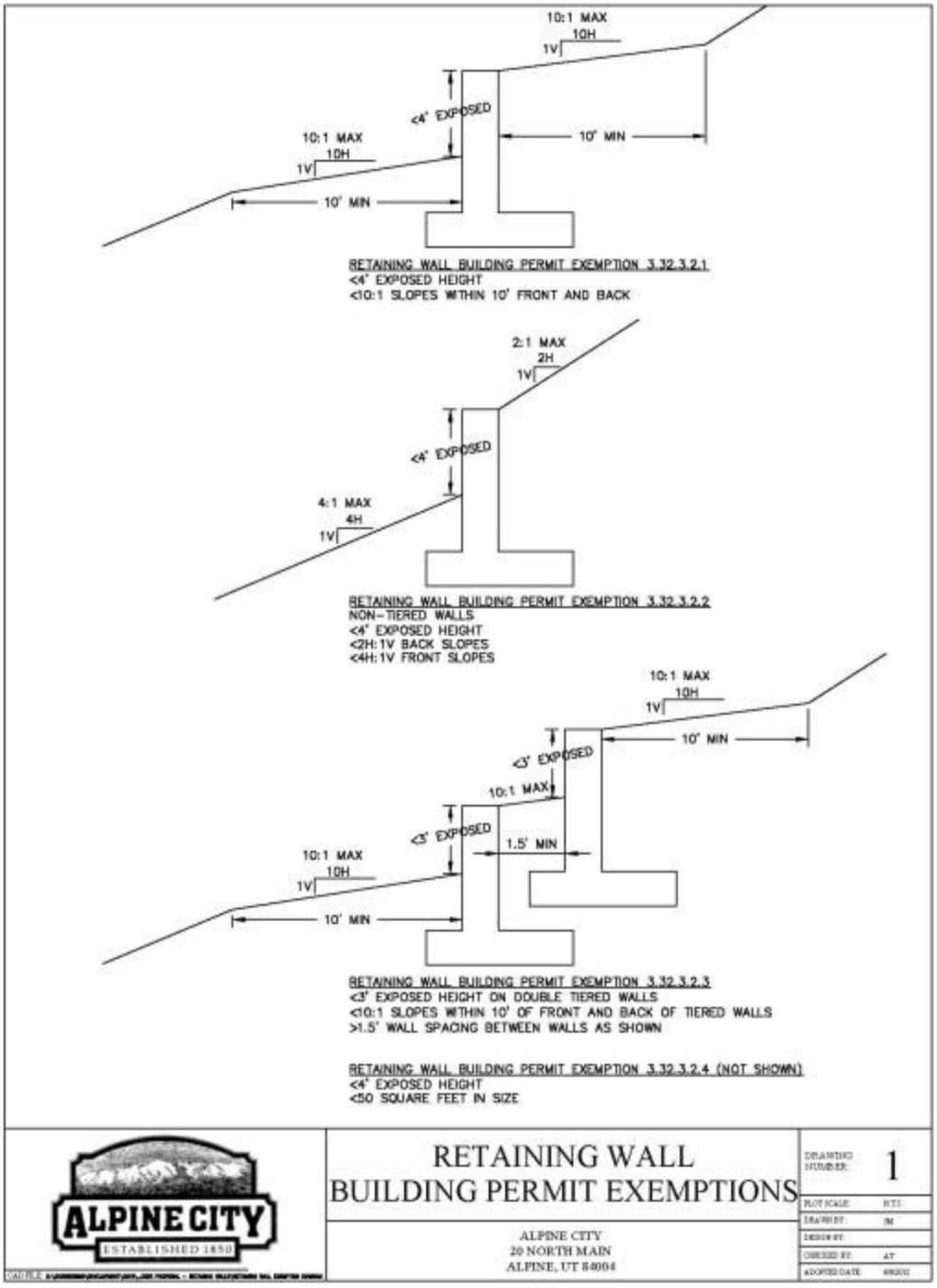


(Ord. No. 2015-07, 06/09/15)

PASSED AND ADOPTED BY THE ALPINE CITY COUNCIL
_____.

| | **AYE** | **NAY** | **ABSENT** | **ABSTAIN** |
|---|---|---|---|---|
| Lon Lott | _____ | _____ | _____ | _____ |
| Carla Merrill | _____ | _____ | _____ | _____ |
| Gregory Gordon | _____ | _____ | _____ | _____ |
| Jason Thelin | _____ | _____ | _____ | _____ |
| Jessica Smuin | _____ | _____ | _____ | _____ |

Presiding Officer

_____
Troy Stout, Mayor, Alpine City

Attest

_____
Bonnie Cooper, City Recorder Alpine City

**ALPINE CITY**
**ORDINANCE 2021-12**

**AN ORDINANCE ADOPTING AMENDMENTS TO ARTICLE 3.32.030 OF THE ALPINE CITY DEVELOPMENT CODE PERTAINING TO THE LOCATION OF RETAINING WALLS.**

**WHEREAS,** The Planning Commission held a public hearing on May 18, 2021, regarding proposed amendments to Article 3.32.030 of the Development Code; and

**WHEREAS,** on May 25, 2021, the Alpine City Council has deemed it in the best interest of Alpine City to update the Retaining Wall ordinance; and

**WHEREAS,** the Alpine City Planning Commission has reviewed the proposed Amendments to the Development Code, held a public hearing, and has forwarded a recommendation to the City Council; and

**WHEREAS,** the Alpine City Council has reviewed the proposed Amendments to the Development Code:

**NOW THEREFORE,** be it ordained by the Council of the Alpine City, in the State of Utah, as follows: The amendments to Article 3.32.030 will supersede Article 3.32.030 as previously adopted. This ordinance shall take effect upon posting.

**SECTION 1:** **AMENDMENT** "3.32.030 Purpose And Intent" of the Alpine City Development Code is hereby *amended* as follows:

A M E N D M E N T

3.32.030 Purpose And Intent

The purpose of this ordinance and the intent of the City Council in its adoption is to promote the health and safety and general welfare of the present and future inhabitants of Alpine City. The ordinance will accomplish this purpose by:

1. **Building Permit Required**. Except as otherwise provided in Part 2, all retaining walls require a building permit prior to construction or alteration. Permit applications shall be processed and issued in accordance with building permit procedures and applicable provisions of this section. Building permit review fees will be assessed and collected at the time the permit is issued.
2. **Building Permit Exemptions**. The following do not require a building permit:
    a. Retaining walls less than four feet in exposed height with less than 10H:1V (Horizontal: Vertical) front and back slopes within ten feet of the wall;
    b. Non-tiered retaining walls less than four feet in exposed height with back

slopes flatter than or equal to 2H:1V and having front slopes no steeper than or equal to 4H:1V;

c. Double tiered retaining walls less than four feet in exposed height per wall and which have front slopes and back slopes of each wall no steeper than or equal to 10H:1V within ten feet of the walls, 2 foot spacing between front face of the upper wall and back edge of the lower wall;
d. Retaining walls less than 50 square feet in size, less than 4 feet tall.

3. **Geologic Hazards**. If construction of any retaining wall, which requires a building permit, occurs within sensitive land areas as outlined by ADC 3.12, then all analyses required for the design of retaining walls or rock protected slopes shall follow the Sensitive Lands Ordinance, specifically in regards to limits of disturbance and the required geologic hazard and engineering geology reports (ADC 3.12.060 Part 4)
4. **Engineer Design Required**. All retaining walls required to obtain a building permit shall be designed by an engineer licensed by the State of Utah.
5. **Location, Height, Separation and Plantings**
    a. Location. The retaining wall will not be placed on land designated as a recorded easement, such as a utility or trail easement, unless the owner(s) of said easement agree(s) to allow the encroachment. Documentation of the agreement shall be provided to the City.
    b. For the purposes of this Part, the height of a retaining wall is measured as exposed height (H) of wall of an individual tier.
    c. A single retaining wall shall not exceed nine feet in exposed height if it can be seen from the nearest public right-of-way or adjacent properties to which it is exposed.
    d. Terracing of retaining walls is permitted where justified by topographic conditions, but the combined height of all walls shall not exceed a height of 18 feet if exposed or can be seen from the nearest public right-of-way or adjacent properties. Walls with a separation of at least 2H (H of largest of 2 walls) from face of wall to face of wall shall be considered as separate walls for analysis purposes and applicability to this ordinance. If walls are within 2H (H of largest of 2 walls), then the combined height of the terrace shall be used for limitation of height.
    e. In a terrace of retaining walls, a minimum horizontal separation of H/2 (H of largest of 2 walls) is required as measured from back of lower wall to face of higher wall. If the walls are not viewable from the nearest public right-of-way or adjacent properties, then there is no limitation of height.
    f. The view of the nearest public right-of-way or adjacent property shall be verified by the City Official during the review process and prior to permit for construction.
    g. For terraced walls viewable from the nearest public right-of-way, the horizontal separation between walls shall be planted with a minimum of five shrubs for every 20 linear feet of planting area. The size of the shrubs shall be

less than one-half the width of the terrace. Shrubs shall be drip irrigated to minimize erosion, and when possible, the use of drought resistant vegetation shall be used to minimize future watering needs. The responsibility of drip irrigation resides with the property owner on which the majority of the structure is built. If the majority of the structure is built on private or public open space, a pressurized irrigation service and drip irrigation system shall be installed by the Developer and the future owner(s) of the open space shall be responsible for the drip irrigation maintenance and cost of operation after the warranty period expires

h. Walls greater than four (4) feet in height (H) placed within H/2 of an adjacent property line, which would create a drop-off for the adjacent property, shall install a fence along the top of the wall in accordance with ADC 3.21.060.
i. No retaining wall component shall extend beyond the property lines unless written permission is obtained from the affected property owner.

6. **Submittals**. The following documents and calculations prepared by a licensed engineer of the State of Utah shall be submitted with each retaining wall building permit application:
    a. profile drawings if the retaining wall is longer than 50 lineal feet, with the base elevation, exposed base elevation and top of wall labeled at the ends of the wall and every 50 linear feet or change in grade;
    b. cross-sectional drawings including surface grades and structures located in front and behind the retaining wall a distance equivalent to three times the height of the retaining wall, and if the retaining wall is supporting a slope, then the cross section shall include the entire slope plus surface grades and structures within a horizontal distance equivalent to one times the height of slope;
    c. a site plan showing the location of the retaining walls with the base elevation, exposed base elevation and top of wall labeled at the ends of wall and every 50 lineal feet or change in grade;
    d. a copy of the geotechnical report used by the design engineer. The geotechnical report shall include requirement of Part 6,e otherwise additional laboratory testing is required in Part 6,e;
    e. material strength parameters used in the design of the retaining wall, substantiated with laboratory testing of the materials as follows:
        i. for soils, this may include, but is not limited to, unit weights, direct shear tests, triaxial shear tests and unconfined compression tests;
        ii. if laboratory testing was conducted from off-site but similar soils within a 2000 foot radius of the proposed wall location, the results of the testing with similar soil classification testing needs to be submitted;
        iii. minimum laboratory submittal requirements are the unit weight of retained soils, gradation for cohesionless soils, Atterberg limits for cohesive soils, and shear test data;
        iv. soil classification testing shall be submitted for all direct shear or

triaxial shear tests;

v. if a Proctor is completed, classification testing shall be submitted with the Proctor result; and,

vi. laboratory testing should be completed in accordance with applicable American Society for Testing and Materials (ASTM) standards;

vii. for segmented block walls, the manufacturer's test data for the wall facing, soil reinforcement, and connection parameters shall be submitted in an appendix.

f. the design engineer shall indicate the design standard used and supply a printout of the input and output of the files in an appendix with factors of safety within the design standard used as follows:

i. design calculations ensuring stability against overturning, base sliding, excessive foundation settlement, bearing capacity, internal shear and global stability;

ii. calculations shall include analysis under static and seismic loads, which shall be based on the PGA as determined from probabilistic analysis for the maximum credible earthquake (MCE), with spectral acceleration factored for site conditions in accordance with the current IBC;

iii. Mechanically Stabilized Earth (MSE) walls shall be designed in general accordance with current FHWA or AASHTO standards for design of Mechanically Stabilized Earth Walls and Reinforced Soil Slopes or the current National Concrete Masonry Association (NCMA) Design Manual for Segmental Retaining Walls;

iv. rock walls shall be designed in general accordance with 2006 FHWA-CFL/TD-06-006 “Rockery Design and Construction Guidelines,” or current FHWA standard of care and;

v. concrete cantilever walls shall be designed in general accordance with specifications provided in current American Concrete Institute or American Society of Civil Engineers standards and specifications.

g. a global stability analysis with minimum factors of safety of at least 1.50 under static conditions and at least 1.10 under seismic loading conditions as follows:

i. factors of safety results shall be presented to the nearest hundredth;

ii. seismic loads shall be based on the PGA as determined from probabilistic analysis for the maximum credible earthquake (MCE), with spectral acceleration factored for site conditions in accordance with the current IBC;

iii. the cross-sectional view of each analysis shall be included, and the printout of the input and output files placed in an appendix; and,

iv. the global stability analysis may be omitted for concrete cantilever retaining walls that extend to frost depth, that are less than nine feet in exposed height, absent of supporting structures within 30 feet of the

top of the wall, and which have less than 10H:1V front and back slopes within 30 feet of the retaining structure.

h. a drainage design, including a free draining gravel layer wrapped in filter fabric located behind the retaining wall with drain pipe day-lighting to a proper outlet or weep holes placed through the base of the wall, however:
    i. a synthetic drainage composite may be used behind MSE walls if a materials specific shear testing is completed to determined friction properties between the backfill and synthetic drainage composite;
    ii. a synthetic drainage composite is not allowed behind rock walls;
    iii. a synthetic drainage composite may be used behind the stem of the concrete cantilever walls;
    iv. if the engineering can substantiate proper filtering between the retained soils and the drain rock, then the filter fabric may be omitted, and;
    v. if the retaining wall is designed to withstand hydrostatic pressures or the retained soils or backfill is free-draining as substantiated through appropriate testing, then drainage material may be omitted from the design.

i. the design engineer's acknowledgement that the site is suitable for the retaining wall;
j. an inspection frequency schedule.

7. **Preconstruction Meeting**. At least 48 hours prior to the construction of any approved retaining wall, a preconstruction meeting shall be held as directed by the Building Official. The meeting shall include the Building Official, the design engineer, the contractor and the project or property owner. The preconstruction meeting can be waived at the discretion of the Building Official.
8. **Inspections and Final Report**. The design engineer shall make all inspections needed during construction. A final report from the design engineer shall state that the retaining wall was built according to the submitted design. The design engineer shall submit the final report to the Building Official to close out the permit. The report shall include detail of the inspections of the wall in accordance with the inspection frequency schedule. All pertinent compaction testing shall also be included with the final report.
9. **Maintenance**. All retaining walls shall be maintained in a structurally safe and sound condition and in good repair.

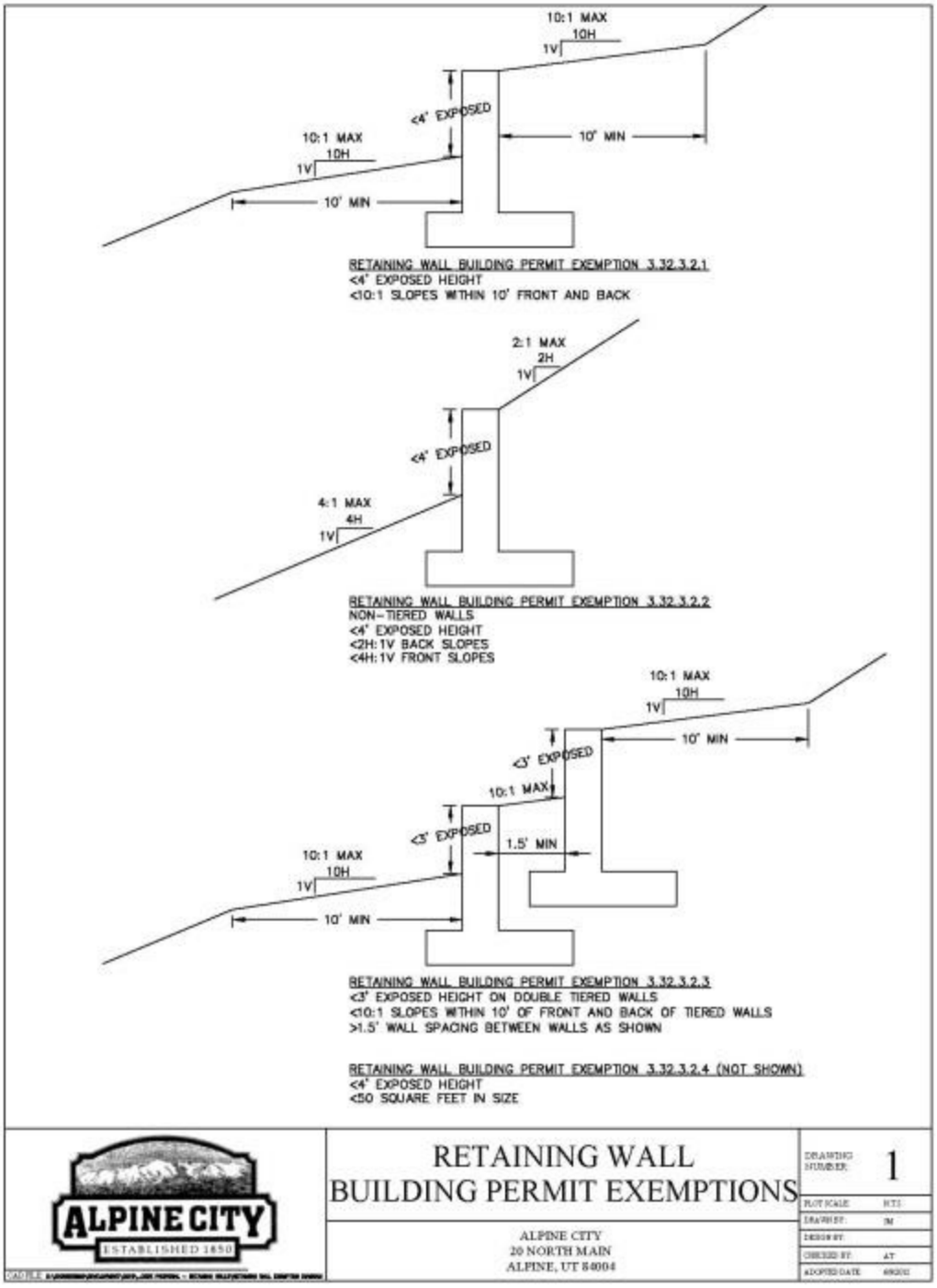


(Ord. No. 2015-07, 06/09/15)

PASSED AND ADOPTED BY THE ALPINE CITY COUNCIL
_____.

| | **AYE** | **NAY** | **ABSENT** | **ABSTAIN** |
|---|---|---|---|---|
| Lon Lott | _____ | _____ | _____ | _____ |
| Carla Merrill | _____ | _____ | _____ | _____ |
| Gregory Gordon | _____ | _____ | _____ | _____ |
| Jason Thelin | _____ | _____ | _____ | _____ |
| Jessica Smuin | _____ | _____ | _____ | _____ |

Presiding Officer

_____
Troy Stout, Mayor, Alpine City

Attest

_____
Bonnie Cooper, City Recorder Alpine City

# ALPINE CITY COUNCIL AGENDA

**SUBJECT: Lambert Park Structure Discussion**

**FOR CONSIDERATION ON: 25 May 2021**

**PETITIONER: City Staff**

**ACTION REQUESTED BY PETITIONER: Discuss the details of the Lambert Park structure.**

**BACKGROUND INFORMATION:**

As we move forward with improvements in Lambert Park, some questions have come up about the details of some of the improvements and their intended use, including the Lambert Park structure that was recently approved. Details of the plans will be discussed and determined so the improvements can be completed.

**STAFF RECOMMENDATION:**

**SAMPLE MOTION TO APPROVE:**
**I move to direct staff to move forward with the following improvements in Lambert Park:**

- **<insert options>**