Nibley City
Planning Commission Meeting
Thursday, March 4, 2021
455 W. 3200 S.
Nibley, UT

6:30 p.m. Call to Order and Roll Call
Approval of Agenda
Approval of Minutes

In accordance with Utah Code Annotated 52-4-207 and Nibley City Resolution 12-04, this meeting may be conducted electronically. The anchor location for the meeting will be Nibley City Hall, 455 West 3200 South, Nibley, Utah. The public may participate in the meeting either in person or via the Zoom meeting link provided at www.nibleycity.com .

1. **Discussion and Consideration**: Conditional Use Permit for Utility Substation at 75 W 3200 S (Applicant: Dominion Energy Utah)
2. **Workshop**: Mixed Residential Housing Ordinance
3. **Workshop**: Future Land Use Map Amendments
4. Staff Report and Action Items

Planning Commission agenda items may be tabled or continued if 1) Additional information is needed in order to take action on the item, OR 2) The Planning Commission feels there are unresolved issues that may need further attention before the Commission is ready to make a motion. ***No agenda item will begin after 10:00 p.m. without a unanimous vote of the Commission****. The Commission may carry over agenda items, scheduled late in the evening and not heard, to the next regularly scheduled meeting.*

IN COMPLIANCE WITH THE AMERICANS WITH DISABILITIES ACT, REASONABLE ACCOMMODATIONS FOR INDIVIDUALS WITH DISABILITIES WILL BE PROVIDED UPON REQUEST. FOR ASSISTANCE, PLEASE CALL 752-0431 A MINIMUM OF 24 HOURS BEFORE THE MEETING.

Nibley City Planning Commission Agenda Item Report

March 4, 2021

Agenda Item #1: Utility Substation CUP

Description

Discussion and Consideration: Conditional Use Permit for Utility Substation at 75 W 3200 S (Applicant: Dominion Energy Utah)

Department

City Planning

Action Type

Administrative

Recommendation

Recommend approval of Conditional Use Permit for Utility Substation at 75 W 3200 S (Applicant: Dominion Energy Utah)

Reviewed By

City Planner, City Engineer, Public Works

Background

Dominion Energy Utah is proposing to construct a natural gas regulating facility at 75 West 3200 South (Parcel 03-026-0015) on a 0.128 acre site on the southwest corner of the Parcel. Dominion Energy currently owns a parcel directly north of this site and is currently working with the landowner of the proposed site on a lot line adjustment to relocate the parcel. However, the

current landowner of Parcel has appointed Rick Hellstrom of Dominion Energy as the landowners' agent who is authorized to make decisions regarding the development.

Staff has classified this use as a 'Utility Substation,' which is listed as a conditional use in the R-2 zone in which the parcel is located. The applicant has indicated that the purpose of this facility is to provide natural gas service to the Nibley Area. The facility will include a small metal building that houses the regulator station and above ground valves necessary to control flow.

NCC 19.24.180 provides the following requirements for utility substations in residential zones: In all residential zones, public utility substations shall meet the following requirements:

A. *Lot Area: Each public utility substation in a residential zone shall be located on a lot not less than two thousand (2,000) square feet in area.*
B. *Yards: Each public utility substation in a residential zone shall be provided with a yard on each of the four (4) sides of the building not less than five feet (5') in width, except that for such stations located on lots fronting on a street abutted by one or more residential lots, the front yard, side yards and rear yard shall equal those required for a single-family residence in the same zone.*
C. *Street Access: Each public utility substation in a residential zone shall be located on a lot which has adequate access from a street, alley or easement.*
D. *Location To Be Approved: The location of a public utility substation in a residential zone shall be subject to approval by the planning commission.*

Based upon the application submitted, the lot area requirement and yard requirement has been met. Dominion Energy has also proposed adequate street access to the site. Dominion Energy proposes to grade the site and install an 8' tall chain link security fence with 3 strands of barbed wire and a 16' access gate. The facility is expected to require periodic maintenance but is not proposed to include any onsite employees.

The regulating facility is necessary effectively serve the City and surrounding area with natural gas service. However, the site, as proposed does impose visual impacts that may be reasonably mitigated. NCC 19.28.050-C-2-g provides 'The City may require the placement of fences or walls to enhance security and mitigate aesthetic or other impacts at facilities adjacent to residential areas.' It is Staff's opinion that the proposed chain link fence with barbed wire is visually obtrusive and proposes that the applicant install a more aesthetically appropriate fence, such as ornamental Iron Fencing. At the time of this writing, the applicant has indicated that they would be willing to install an 8' block wall. This would be appropriate, so long as it is setback at least 30 ft from the roadway. Otherwise, a transparent fence would be needed in the front yard area.

The City Engineer has reviewed the construction drawings and has requested a stormwater plan and documentation that the adjacent property owner has authorized any fill that will go on their property as part of the construction. The City Engineer is comfortable with recommending approval conditional upon addressing these concerns.

Recommended Conditions:

1. In place of the proposed chain link fence, install a more aesthetic alternative and appropriately secure fence such as ornamental iron rod.
2. Address concerns of City Engineer, including stormwater plans and assurance that adjacent property owner authorizes any fill that overflows onto their property.

Agenda Item #2: Mixed Residential Housing

Description

Workshop: Mixed Residential Housing Ordinance

Department

City Planning

Action Type

Workshop

Recommendation

Discuss Mixed Residential Housing Ordinance

Reviewed By

City Planner

Background

The purpose of this discussion is to review the need for a mixed residential housing ordinance, review the DRAFT ordinance and provide recommendations for adjustments to be incorporated. One of the Planning Commission goals for 2021 is to develop an ordinance that allows for multifamily housing development in targeted areas of the City. Due to escalating housing prices and evolving housing preferences, there is currently significant demand for the development of more land efficient housing, such as apartments, condominiums and townhomes. Nibley City's General Plan includes the following vision with regards to residential development and housing:

While retaining the character and form of established neighborhoods, residential development in Nibley will emphasis the conservation of open space and, using that conservation process, will incorporate a variety of housing forms.

Adopting an appropriate mixed income housing ordinance will contribute to this vision by accommodating the growing population in a more land efficient development pattern and allowing the City to guide the design of such development to ensure the preservation of existing neighborhoods.

Nibley City's Annexation Declaration Area includes certain unincorporated, undeveloped parcels adjacent to existing Nibley City residential neighborhoods and parks along 2200 South. These parcels are also within Logan's Annexation Declaration Area. Therefore, property owners and perspective developers of such properties naturally migrate to the City which will allow for the use with the highest profit margin. Because Logan City allows for 20-30 units/acre on these parcels, it has been more profitable for such parcels to annex to Logan. However, due to proximity to Nibley City neighborhoods, parks, schools, and streets, Nibley City bears most of the impact of such development. In addition, the City has no control over the design of such development to ensure that it is designed in a way to mitigate potential impacts.

Nibley City recently developed a Residential Planned Unit Development ordinance, which provides several development standards for master-planned, single-family and townhome housing developments that can be developed at a maximum of 10 units/net developable acre. While this ordinance has resulted in quality development applications dispersed in different locations of the City, it is much more restrictive than current land use policy in Logan City.

That said, Staff recommends adopting several of the standards of the R-PUD ordinance which appropriately ensure quality design, connectivity, adequate provision of open space & amenities. The Planning Commission should consider additional standards that may apply to higher density housing development.

Agenda Item #2: Future Land Use Map Amendments

Description

Workshop: Future Land Use Map Amendments

Department

City Planning

Action Type

Workshop

Recommendation

Discuss potential amendments to Future Land Use Map

Reviewed By

City Planner

Background

As noted under item #2, there is currently a need for Nibley City to consider the adoption of an ordinance that would allow for the development of higher density residential development. Specific areas of interest are unincorporated areas near 2200 South. In coordination with this initiative, the City should review its existing Future Land Use map and identify appropriate areas in the City for such development given the context.

Dominion Energy Utah Dominion Energy Wyoming Dominion Energy Idaho
Property & Right-of-Way
1140 West 200 South, Salt Lake City, UT 84104
Mailing Address:
P.O. Box 45360, Salt Lake City, UT 84145-0360
DominionEnergy.com

Dominion Energy®

February 16, 2021

Levi Roberts
Nibley City
455 West 3200 South
Nibley, UT 84321

RE: Conditional Use Application
Proposed Natural Gas Facility Site

Dear Levi,

As per our recent conversation and your February 9th email, enclosed is a Conditional Use Permit application for Dominion Energy Utah (Dominion) to construct and operate a natural gas regulator facility at approximately 75 West 3200 South in Nibley, Utah.

Dominion will begin construction of an 8" HP natural gas pipeline, in the 3200 South corridor designed to help Dominion meet growing customer demand for natural gas within its system which is designed to enhance safety and reliability of our pipeline system by making this new pipeline easier to monitor and maintain.

Dominion purchased property for this facility approximately a decade ago. We are currently in the process of completing surveys and documentation to relocate and expand our site to a location adjacent to the 3200 South corridor. We are working with an out of state landowner trustee to obtain a signature on an agent authorization letter but would like to have you start the conditional use permit process while we pursue this letter.

The proposal for this site is to construct a small metal building to house a regulator station (LG0012), along with the necessary above ground valves necessary to control flow through the station and an inline inspection facility (pig launcher) for the 8" high pressure pipeline. In line inspections are currently performed on a 5-7 years cycle, where electronic tools are inserted into the pipeline and travel for several miles, inspecting the integrity of the pipeline.

Dominion proposes to grade the site according to the attached plan and install an 8' tall chain link security fence with 3 strands of barbed wire on top, and a 16' wide access gate.

Please call me at 801-232-8153, if you have any questions concerning this proposal. Thank you for your assistance in this matter.

Sincerely,

Rick Hellstrom
Land Agent Consultant

enclosures

APPLICATION FOR CONDITIONAL USE PERMIT/~~BUSINESS LICENSE~~

Office Use Only
Date Received_____
Application Fee Paid: $30.00
Rec'd By_____

Name QUESTAR GAS COMPANY dba DOMINION ENERGY UTAH
Address P.O. BOX 45360 1140 W 200 S SALT LAKE CITY, UT 84145-0360
Phone 801-232-9153 Cell SAME Fax —
Email rick.hellstrom@dominionenergy.com

Please Note: The owner/operator of this business must live at the address stated above. Nibley City cannot issue conditional use permit/business licenses for home occupations to persons who do not live at the address where the business will be located. N/A

Please describe the reason you are requesting a conditional use permit/business license:

____ Home Office ____ Sales ____ Manufacturing ____ Day Care
X Other (please describe): CONSTRUCT A NATURAL GAS REGULATING FACILITY

Proposed ~~business~~ name: DR STA LG0012

Description of business: PROPOSED FACILITY LOCATED AT: 75 WEST 3200 SOUTH, NIBLEY, UT

Describe how the proposed business activity will or will not affect the residential neighborhood surrounding the business location: FACILITY WILL PROVIDE NATURAL GAS SERVICE TO THE NIBLEY AREA. THIS IS AN UNMANNED FACILITY REQUIRING ONLY PERIODIC MAINTENANCE

Do you plan to employ persons not living at this address as part of the business? Y (N)

Will those employees be working in your home or at another location? Please describe: N/A

Do you plan to conduct any of the business in an accessory building at this address? ~~Y N~~ N/A

How many clients will visit this location weekly? NONE

Describe how you will provide parking for client visits (if applicable): ON SITE PARKING FOR MAINTENANCE WORK

Will you have business vehicles which will require parking accommodations? ~~Y N~~ PERIODICALLY

If so, please describe the vehicles and parking plans: ON SITE

How many business shipments do you anticipate sending and receiving from this location each month and how will these deliveries be shipped? N/A

Continue on Other Side

Will you be able to provide adequate indoor storage for these deliveries? ~~Y~~ ~~N~~ N/A

If applicable, describe any signs at this address which will advertise the business: NO ADVERTISING ONLY IDENTIFICATION SIGNS REQUIRED BY LAW.

File the completed application at:
Nibley City
455 West 3200 South
Nibley, UT 84321
(435) 752-0431

Once the application has been completed and submitted, along with any and all applicable fees (see attached "Nibley City Fee Schedule"), the item will be placed on an upcoming agenda for the Nibley Planning Commission meeting. Planning Commission meetings have a two-week prior application deadline, so be aware that it may be up to 4 weeks before this application is on the agenda.

Applicant Certification

I certify under penalty of perjury that this application and all information submitted as a part of this application are true, complete and accurate to the best of my knowledge. I also certify that I am the owner of the subject property and that the authorized agent noted in this application has my consent to represent me with respect to this application. Should any of the information or representations submitted in connection with this application be incorrect or untrue, I understand that Nibley may rescind any approval, or take any other legal or appropriate action. I also acknowledge that I have reviewed the applicable sections of the Nibley City Code and that items and checklists contained in this application are basic and minimum requirements only and that other requirements may be imposed that are unique to individual projects or uses.

Property Owner Signature RICK HELLSTROM LAND AGENT CONSULTANT DOMINION ENERGY UTAH

Date 2/15/2021

FOR OFFICE USE ONLY

Approved_____ Denied_____ Approved w/Conditions_____

Comments_____

Land Use Authority Signature

Date

Print Name/ Title

Home Based Business License Fee: **$30.00**
Received Date: _____
Rec'd By: _____
License Issued Date: _____

Existing Dominion Energy Site
Proposed Dominion Energy Site
165
W 3200 S
Nibley
Main St
Google Earth
© 2021 Google
300 ft
N

New Dominion Energy Parcel Boundary Description

BEGINNING AT A POINT ON THE GRANTORS SOUTH PROPERTY LINE, SAID POINT BEING SOUTH 1182.45 FEET AND SOUTH 89°02'00"EAST 4787.64 FEET ALONG THE NORTH LINE OF 3200 SOUTH STREET FROM THE WEST QUARTER CORNER OF SECTION 21, T 11 N, R 1 E, SLB&M, BASIS OF BEARING IS SOUTH 00°40'48" EAST 2654.34 FEET BETWEEN THE NORTHWEST CORNER AND THE WEST QUARTER CORNER OF SAID SECTION 21;

THENCE ALONG THE BOUNDARY OF AN EXISTING COMMUNICATION EASEMENT AS PER SURVEY 98-106 FILED AT THE CACHE COUNTY SURVEYOR'S OFFICE THE FOLLOWING TWO COURSES:
NORTH 00°58'00" EAST 28.00 FEET,
NORTH 89°02'00" WEST 15.30 FEET;
THENCE NORTH 00°58'00" EAST 52.00 FEET ALONG THE GRANTORS WEST PROPERTY AND FENCE LINE;
THENCE SOUTH 89°02'00" EAST 75.00 FEET;
THENCE SOUTH 00°58'00" WEST 80.00 FEET TO THE NORTH LINE OF 3200 S;
THENCE NORTH 89°02'00" WEST 59.70 FEET ALONG THE NORTH LINE OF SAID 3200 SOUTH STREET TO THE POINT OF BEGINNING.

CONTAINS +/- 5571.60 SQUARE FEET OR 0.128 ACRES

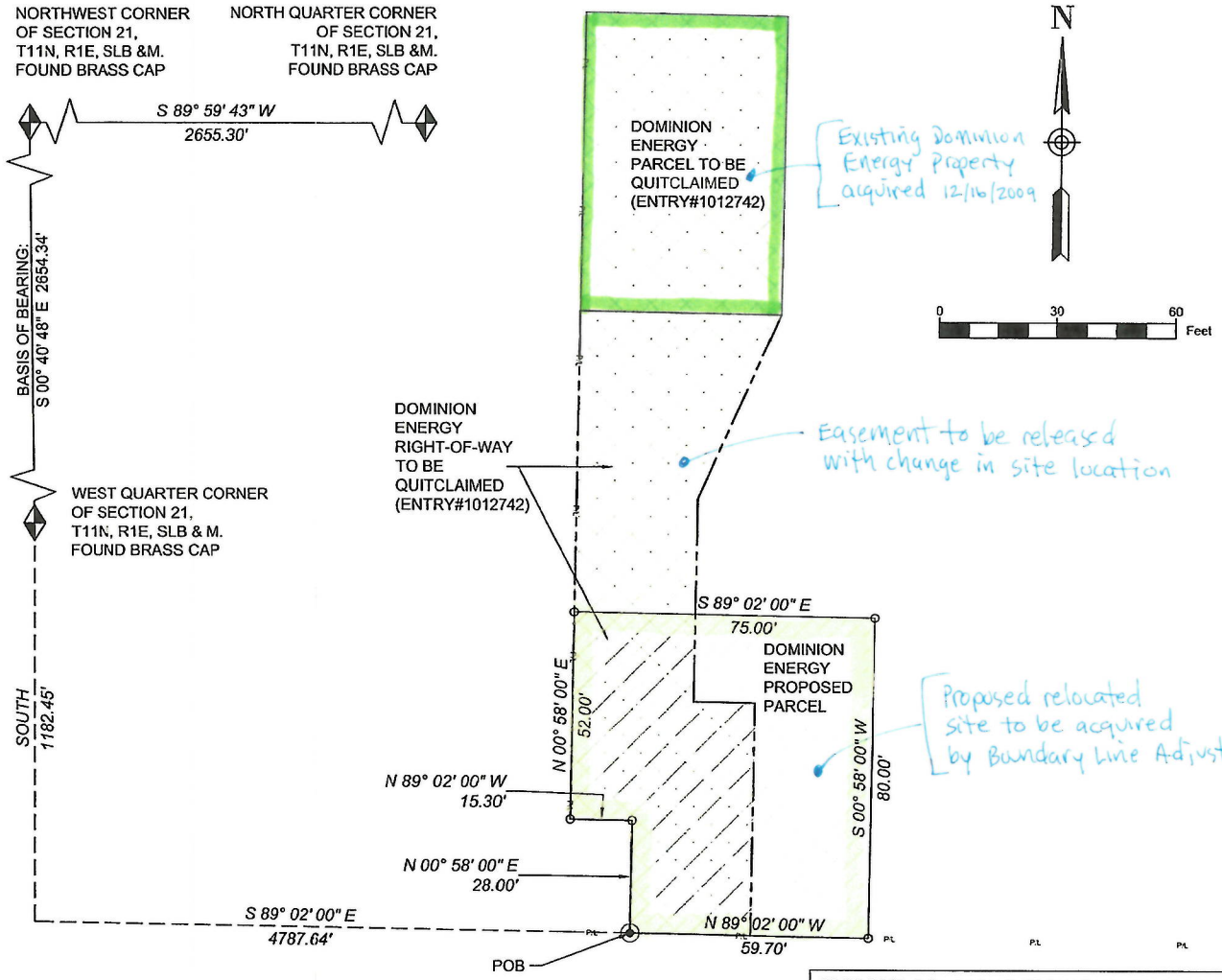

LEGEND

SECTION LINE	
PROPERTY LINE	P.L.
RIGHT-OF-WAY LINE	
PARCEL/R/W TO BE QUITCLAIMED	
PROPOSED PARCEL	
SECTION CORNER	
POINT OF BEGINNING	
POINT OF INTERSECTION	

PROPOSED DOMINION ENERGY UTAH NEW PROPERTY

LOCATED IN
SECTION 21 T.11N. R.1E. S.L.B.&M.
CACHE COUNTY, UTAH

SCALE	DRAWN BY	SURVEY DATE
1' = 30' ON 11X17 PRINT	ENOCH CLEMENCE	JUNE 6, 2020

Dominion Energy®
DOMINION ENERGY UTAH

1140 WEST 200 SOUTH
SALT LAKE CITY, UTAH

Nibley City
455 West 3200 South
Nibley, UT 84321

To Whom It May Concern:

I, Elizabeth Bowen, Trustee of the Virginia S. Harris Inter Vivos Trust dated the 29th day of October, 1979, hereby appoint RICK HELLSTROM, Land Agent Consultant for Dominion Energy Utah as my agent in regards to the Dominion Energy Utah's (Dominion) application for a Conditional Use Permit (CUP) for its District Regulator Station Site located at approximately 75 West 3200 South, Nibley, Cache County, Utah.

Said application is for a 0.128 acre site in the southwest corner of Parcel 103-0260-0014. Dominion and The Virginia S. Harris Trust are currently preparing documents to relocate Dominion's existing Parcel #03-026-0015 to the location depicted in the CUP application.

By appointing an agent, I understand that he is authorized to make decisions regarding said development and will be the point of contact should issues/questions arise during the review period.

Dated the _____ day of _____, 2021.

The Virginia S. Harris Inter Vivos Trust
dated the 29th day of October, 1979

BY: _____
Elizabeth Bowen, Trustee

Cache County 1857

2021 TAX YEAR
RECORDER
179 North Main St. Suite 101 • Logan, UT 84321 • (435) 755-1530

2/10/2021

03-026-0014
Parcel Number

Owner's Name & Address

Parcel	**03-026-0014**	Entry	**578597**
Name	**HARRIS, VIRGINIA S TR**		
C/O Name			
Address	**3085 S MAIN ST**		
City, ST Zip	**NIBLEY, UT 84321-8543**		
District	**008 NIBLEY CITY W/CEM**		
Year	**2021**	Status	**TX**

Owner(s) List (1/1/2021)

1 HARRIS, VIRGINIA S TR
578597 566/928

Property Address

Address	
City	
Assr. Review	**12/21/2018**

PARCEL HISTORY

REM PT 03-025-0001 9/00; REM 11/08-0006; REM 12/09-0015;

LEGAL DESCRIPTION FOR 2021

BEG 432.83 FT S & 1157.0 FT E OF NW COR OF SW/4 OF SEC 21 T 11N R 1E & TH S 89*02' E 727.10 FT TO TRUE POB TH S 10*45'34" W 45.0 FT TH S 30*54'52" W 193.55 FT TH SE'LY ALG FENCE IN 5 COURSES: S 17*34'41" E 68.99 FT S 25*04'55" E 42.82 FT S 32*36'34" E 97.91 FT S 29*08'22" E 44.17 FT S 23*16'26" E 171.57 FT TH N 29.69 FT TO NW COR PARCEL 0005 TH E 10 RDS 4 FT TH S 35.66 FT TH E 50 FT TH S 75 FT TH W 50 FT TH S 0*58' W 155.34 FT TO N LN OF 3200 S ST TH E 147.5 FT TO PT N 89*02' W 199 FT OF W LN OF ST HWY TH N 1*50' E 65 FT TH S 89*02' E 59 FT TH N 1*50' E 55 FT TH S 89*02' E 10 FT TH N 1*07'49" E 199.30 FT TH E 32 FT N 1*50' E 101.5 FT TH N 89*21' W 25 FT N 1*50' E 99 FT S 89*02' E 123 FT N 1*50' E 110.2 FT N 2*30' W 4 RDS N 89*02' W 9 RDS N 2*30' W 8 RDS N 89*02' W 455.5 FT TO TRUE POB
SUBJ TO R/W GRANTED TO QUESTAR GAS CO FOR ACCESS TO PARCEL 0015 (ENT 1012741)
ALSO: BEG 18.78 CHS S & 31.61 CHS S 89*02' E & N 89*02' W 100 FT OF NW COR OF SE/4 SEC 21 T 11N R 1E & TH N 100 FT TH N 89*02' W 7.12 FT TH S 100 FT TH S 89*02' E 7.12 FT TO BEG

LESS PARCEL 03-026-0009 AS FOLL: BEG N 88* W 225.1 FT FROM PT N1*50'E 99 FT OF PT BR S 859.46 FT & E 2433.02 FT FROM NW COR SE/4 SEC 21 T 11N R 1E & TH N 1*23' E 148.2 FT TH S 69*16' W 80.7 FT TH S 41*04' W 75.2 FT TH N 86*44' W 28.3 FT TH S 3*19' W 59.35 FT TH S 88* E 153.05 FT TO BEG SUBJ TO 12 FT R/W OVER S 12 FT OF PARCEL WITH 12 FT R/W BEG SE COR SD PARCEL & TH E 219.37 FT TO W R/W STATE HWY TH N'LY 12 FT ALG R/W TH W'LY 219.32 FT IN LN PARALLEL TO & N 12 FT FROM S LN OF R/W TH S 1*23' W 12 FT TO BEG 0.36 AC M/L

LESS PARCEL 03-026-0013 AS FOLL: BEG 783.43 FT S & 2118.21 FT E OF NW COR SE/4 SEC 21 T 11N R 1E & TH S 1*07'49" W 135 FT TH N 89*02' W 135 FT TO CENTER OF SPRING CREEK TH NW'LY ALG CREEK 146 FT TO PT W OF BEG TH S 89*02' E 190 FT TO BEG WITH R/W (SEE DEED) CONT 0.50 AC NET 7.32 AC

PROPERTY INFORMATION

		Acres	2020 Market	Taxable
BA	BUILDING AGRICULTURE		15,200	15,200
LA	LAND AGRICULTURE		190,400	190,400
	TOTALS	**7.32**	**205,600**	**205,600**

2021 VALUES WILL BE AVAILABLE AFTER 5/21/2021

Parcel and Zoning Viewer

Parcel ID: 03-026-0015
Owner Name: QUESTAR GAS COMPANY
Owner Address: PO BOX 45360
Owner City State Zip: SALT LAKE CITY, UT 84145-0360
Tax District Code: 008
District Code Definition: NIBLEY CITY W/CEM
Legal Acreage: 0.09
Year Built: 0
Zone Primary: CITY
Zone Primary Description: CITY - Contact Cities for Zoning
Legal Description: BEG S 1182.45 FT & S 89*02' E 4771.79 FT ALG N LN OF 3200 S ST FROM W/4 COR SEC 21 T 11N R 1E SD POB BEING SE COR OF PARCEL 03-026-0005 & TH N 0*58' E 155.34 FT TO TRUE POB TH N 0*58' E 75.0 FT TH S 89*02' E 50.0 FT TH S 0*58' W 75.0 FT TH N 89*02' W 50.0 FT TO TRUE POB CONT 0.09 AC M/B WITH A R/W (SEE ENT 1012741)

SEE STATE ASSESSED ACCOUNT 05-300-0038

Recorder's Plat 1
1970 Recorder's Plat
1978 Recorder's Plat
2006 Recorder's Plat
CORE (Cache Online Records Express)

200ft

41°40'31"N 111°50'03"W

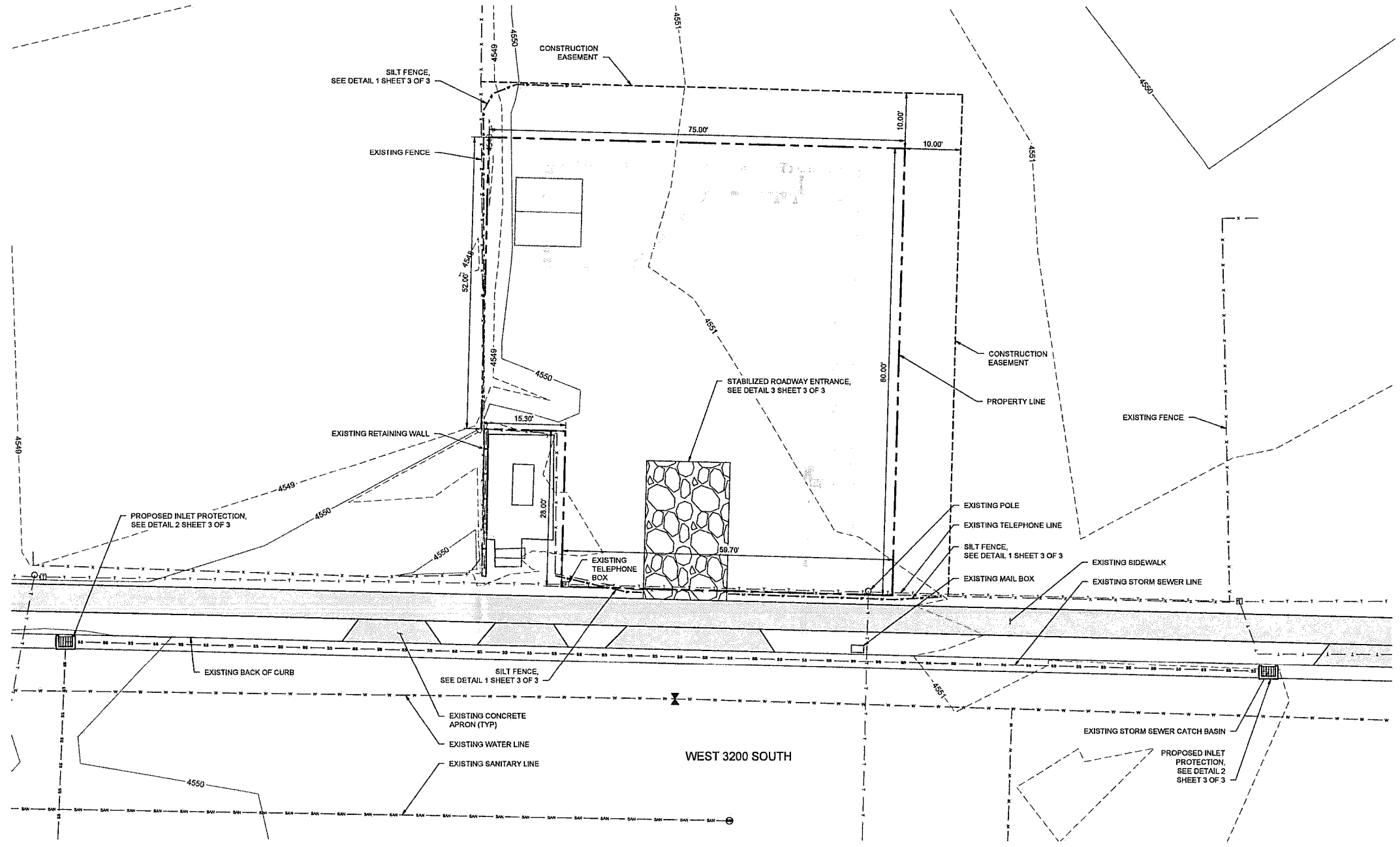

NOTES:

1. FIELD VERIFY ALL UTILITIES AND FEATURES PRIOR TO CONSTRUCTION.
2. EXISTING GROUND SURFACE TOPOGRAPHY AND SURVEY INFORMATION BASED UPON DEU-P-F023-MAP-002-PRELIM FOR BARR ENG.DWG DRAWING PROVIDED BY DOMINION DATED MAY 2019.
   COORDINATE SYSTEM: UTAH STATE PLANE, NORTH ZONE, US FEET
   HORIZONTAL DATUM: NAD83
   VERTICAL DATUM: NAVD88 (ASSUMED)

PROFESSIONAL ENGINEER No. 10908287-2202 BETHANY KELLY STATE OF UTAH 10/14/19

ISSUED FOR CONSTRUCTION

REFERENCE DRAWINGS		
DRAWING NUMBER	REV	DRAWING DESCRIPTION
DEU-R-LG0012-PIP-001	0	LG0012-PIPING

WORK ORDERS	
WO NUMBER	DESCRIPTION
75963.22	NEW 2x2 REGULATOR STATION LG0012

REVISIONS				
NO	DESCRIPTION	DATE	BY	CHECK
0	ISSUED FOR CONSTRUCTION	10/14/2019	CAD	BSE

ENGINEERING RECORD
DRAWN BY: BARR/CAD
CHECKED BY: BARR/BSE
PROJECT ENGINEER: BARR/BSE
SURVEYOR: E. CLEMENTS
PROJECT MNGR: J. WIERZBICKI
CONSTR MNGR: D. FRANCIS

Dominion Energy

DOMINION ENERGY UTAH

SECTION: 21 T11N R01E
ELEVATION: 4551'
LAT: 41.674898 LONG: -111.834649
SCALE: 1" = 10'-0"

LINE NUMBER: FL- 23
FACILITY: DISTRICT REGULATOR STATION LG0012
TITLE: 2x2 REGULATOR STATION
DESCRIPTION: EXISTING CONDITIONS AND EROSION CONTROL
ADDRESS: 53 WEST 3200 SOUTH

CITY	COUNTY	STATE
NIBLEY	CACHE	UTAH

DRAWING NUMBER	SHEET	REVISION
DEU-R-LG0012-CCS-001	1 OF 3	0

THE INFORMATION AND CONCEPTS CONTAINED IN THIS DOCUMENT ARE CONFIDENTIAL AND THE PROPERTY OF DOMINION ENERGY AND/OR THE CLIENT IDENTIFIED. DUPLICATION OR USE OF THIS INFORMATION AND/OR CONSTRUCTION OF SYSTEMS BASED ON THIS DOCUMENT ARE STRICTLY PROHIBITED WITHOUT WRITTEN AUTHORIZATION FROM DOMINION ENERGY.

CADD USER: Chilton A. Diaz FILE: IN:\DESIGN\418106.0\DEU-X-LG001\2-CCS-001-SHT1.DWG PLOT SCALE: 1:1 PLOT DATE: 10/14/2019 10:19 AM
DEU-X-LG0012-CCS-001-SHT1.DWG - 10/14/2019 - 10:19am
DOMINION ENERGY_ANSI_D

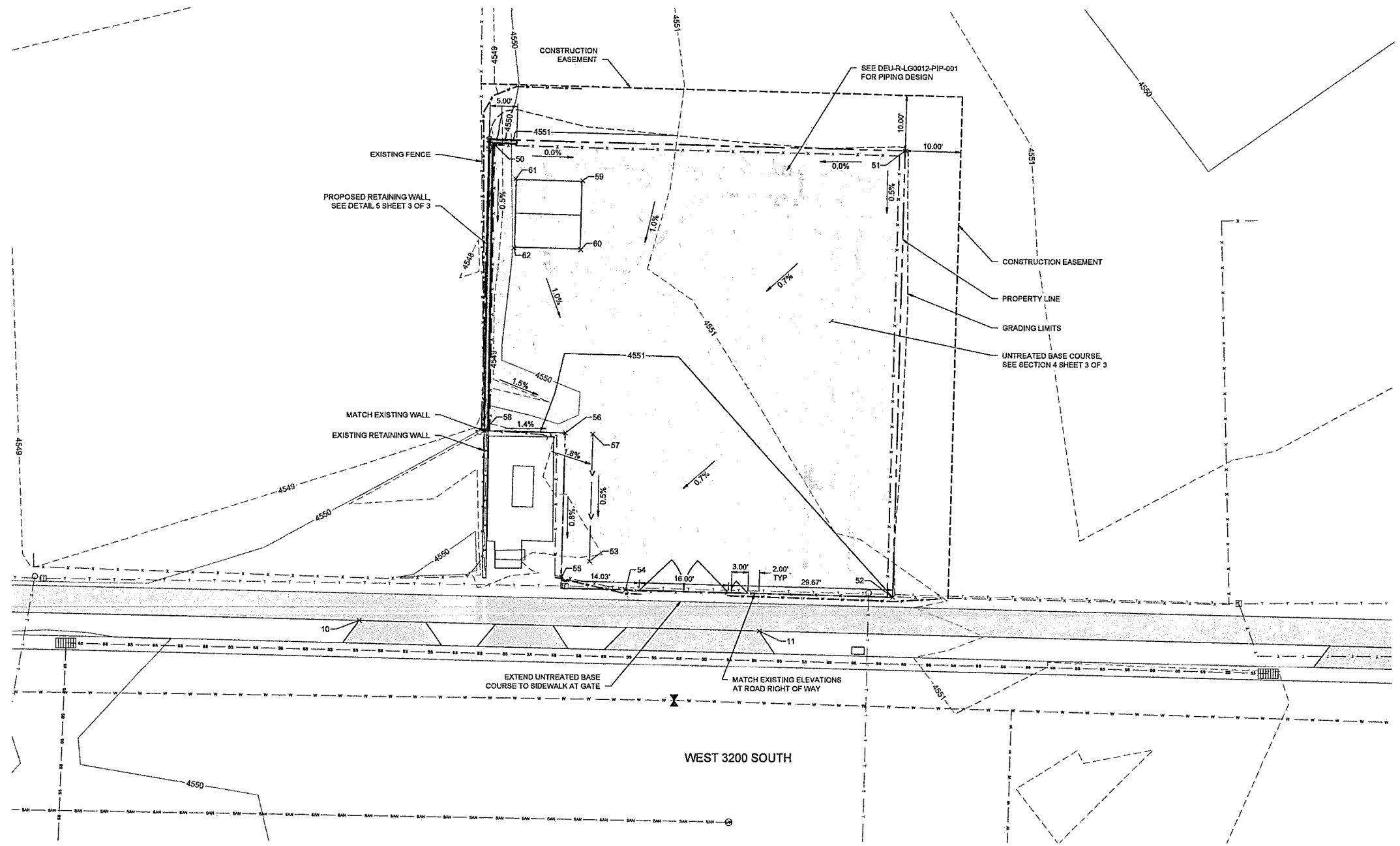

CONSTRUCTION POINTS				
POINT #	EXISTING ELEVATION	PROPOSED ELEVATION	NORTHING	EASTING
10	4550.41'	4550.41	3769747.3702	1548929.1057
11	4550.70'	4550.70	3769745.6710	1549001.3447
50	4548.17'	4551.40	3769833.6492	1548952.4371
51	4551.54'	4551.40	3769831.7740	1549027.4137
52	4550.81'	4551.00	3769751.7990	1549025.4135
53	4550.92'	4550.74	3769758.1657	1548970.8699
54	4550.56'	4550.76	3769753.0021	1548977.3095
55	4550.64'	4550.72	3769755.3307	1548965.7979
56	4550.58'	4550.94	3769781.2827	1548966.4421
57	4550.51'	4550.85	3769781.0876	1548971.4388
58	4551.16'	4551.14	3769781.6499	1548951.6457
59	4550.75'	4551.50	3769828.2201	1548969.5067
60	4550.80'	4551.50	3769813.9739	1548969.2004
61	4550.19'	4551.50	3769826.5264	1548957.2605
62	4550.16'	4551.50	3769814.2802	1548956.9543

NOTES:

1. APPROXIMATE AREA OF UNTREATED BASE COURSE = 5,550 SF .
2. PLACE A MINIMUM OF 6 INCHES OF TOPSOIL, SEED AND MULCH OVER ANY DISTURBED AREA NOT COVERED WITH BASE COURSE.
3. ELEVATIONS SHOWN ARE FINAL GRADE.
4. TOTAL CUT VOLUME = 10 CY
5. TOTAL FILL VOLUME = 60 CY
7. TOPSOIL CUT VOLUME (100 CY) IS IN ADDITION TO VOLUMES ABOVE.
8. CUT AND FILL VOLUMES ARE RAW VOLUMES WITH NO ALLOWANCE FOR SHRINK/SWELL.

0 10 20 30
1" = 10'-0"

PROFESSIONAL ENGINEER No. 10908287-2202 BETHANY KELLY STATE OF UTAH 10/14/19

ISSUED FOR CONSTRUCTION

REFERENCE DRAWINGS		
DRAWING NUMBER	REV	DRAWING DESCRIPTION
DEU-R-LG0012-PIP-001	0	LG0012-PIPING

WORK ORDERS	
WO NUMBER	DESCRIPTION
75963.22	NEW 2x2 REGULATOR STATION LG0012

REVISIONS				
NO	DESCRIPTION	DATE	BY	CHECK
0	ISSUED FOR CONSTRUCTION	10/14/2019	CAD	BSE

ENGINEERING RECORD
DRAWN BY: BARR/CAD
CHECKED BY: BARR/BSE
PROJECT ENGINEER: BARR/BSE
SURVEYOR: E. CLEMENTS
PROJECT MNGR: J. WIERZBICKI
CONSTR MNGR: D. FRANCIS

Dominion Energy
DOMINION ENERGY UTAH

SECTION: 21 T11N R 01E
ELEVATION: 4551'
LAT: 41.674898 LONG: -111.834649
SCALE: 1" = 10'-0"

LINE NUMBER: FL- 23
FACILITY: DISTRICT REGULATOR STATION LG0012
TITLE: 2x2 REGULATOR STATION
DESCRIPTION: PROPOSED SITE AND GRADING
ADDRESS: 53 WEST 3200 SOUTH

CITY	COUNTY	STATE
NIBLEY	CACHE	UTAH

DRAWING NUMBER	SHEET	REVISION
DEU-R-LG0012-CCS-001	2 OF 3	0

THE INFORMATION AND CONCEPTS CONTAINED IN THIS DOCUMENT ARE CONFIDENTIAL AND THE PROPERTY OF DOMINION ENERGY AND/OR THE CLIENT IDENTIFIED. DUPLICATION OR USE OF THIS INFORMATION AND/OR CONSTRUCTION OF SYSTEMS BASED ON THIS DOCUMENT ARE STRICTLY PROHIBITED WITHOUT WRITTEN AUTHORIZATION FROM DOMINION ENERGY.

CADD USER: Chilcan A. Diaz FILE: M:\DESIGN\41810602.00\DEU-X-LG0012-CCS-001-SHT2.DWG PLOT SCALE: 1:1 PLOT DATE: 10/14/2019 10:10 AM
DEU-X-LG0012-CCS-001-SHT2.DWG - 10/14/2019 - 10:10am
DOMINION ENERGY_ANSI_D

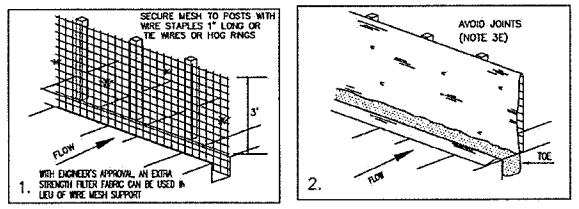

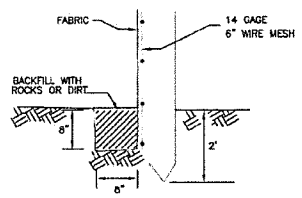

TOE DETAIL

NOTE:

PROVIDE SILT FENCE IN ACCORDANCE WITH APWA PLAN 122.

SILT FENCE DETAIL 1

NOT TO SCALE

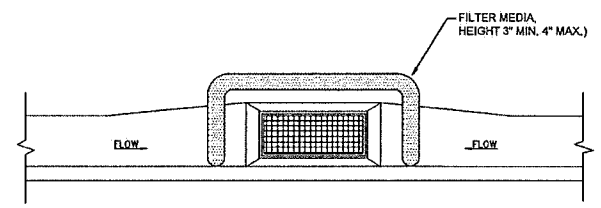

NOTE:

PROVIDE INLET PROTECTION IN ACCORDANCE WITH APWA PLAN 124.1.

INLET PROTECTION DETAIL 2

NOT TO SCALE

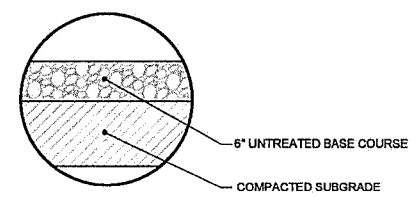

BASE COURSE SECTION 4

NOT TO SCALE

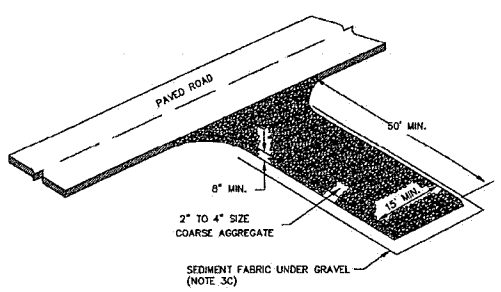

NOTE:

PROVIDE STABILIZED ROADWAY ENTRANCE IN ACCORDANCE WITH APWA PLAN 126.

STABILIZED ROADWAY/CONSTRUCTION ENTRANCE DETAIL 3

NOT TO SCALE

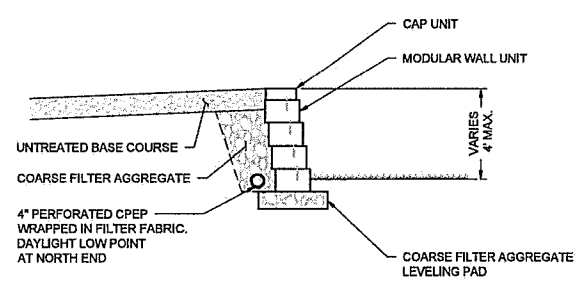

NOTES:

1. RETAINING WALL NOT REQUIRING PROFESSIONAL ENGINEER STAMP.
2. MAINTAIN 4' MAXIMUM HEIGHT.
3. FOLLOW MANUFACTURER SPECIFICATIONS AND RECOMMENDATIONS.

MODULAR RETAINING WALL DETAIL 5

NOT TO SCALE

1.0. SPECIFICATIONS

A. GENERAL

1. GENERAL SOIL CONDITIONS ARE UNKNOWN FOR THE SITE.

B. SUBMITTALS

1. SUBMIT ALL TEST RESULTS FROM TESTING AND INSPECTION REQUIREMENTS.

C. PRODUCTS

1. BASE: UNTREATED BASE COURSE CLASS A, MEETING THE REQUIREMENTS OF UTAH DOT 2017 STANDARD SPECIFICATIONS FOR ROAD AND BRIDGE CONSTRUCTION SECTION 02721.

2. SUBGRADE : COMPACTED NATIVE SOIL.

3. FILL: ALL SOIL MATERIALS EXCEPT ORGANIC SOILS AND FREE OF VEGETATION, DEBRIS, ROOTS, STICKS, BRUSH, NON-SOIL MATERIALS, ROCKS GREATER THAN 4 INCHES IN DIAMETER, AND OTHER MATERIALS WHICH IN THE OPINION OF ENGINEER WILL HAVE A DELETERIOUS EFFECT ON THE WORK. LIQUID LIMIT AND PLASTICITY INDEX LESS THAN 45 AND 20, RESPECTIVELY.
DO NOT USE HIGH PLASTICITY SILT OR CLAY (MH, CH) SOILS AS FILL.

4. MODULAR WALL UNIT: CONCRETE RETAINING WALL UNITS MEETING REQUIREMENTS OF ASTM C1262, FREEZE-THAW DURABILITY MEETING REQUIREMENTS OF ASTM C1262, COLOR AND TEXTURE AS DIRECTED BY OWNER. INCLUDE AN INTEGRAL BATTER CONTROL SHEAR CONNECTOR TO PROVIDE A CONSISTENT SETBACK FOR EACH WALL COURSE.

5. COARSE FILTER AGGREGATE: FREE-DRAINING GRANULAR BACKFILL, MEETING THE REQUIREMENTS OF UTAH DOT 2017 STANDARD SPECIFICATIONS FOR ROAD AND BRIDGE CONSTRUCTION SECTION 02056.

D. EXECUTION

1. INSTALL MEANS TO CONTROL SOIL EROSION IN ACCORDANCE WITH THE PROJECT DRAWINGS.

2. CLEAR AND GRUB GRASSY VEGETATION AND SHRUBS FROM THE GRADING AREA, STOCKPILE OR DISPOSE OF MATERIAL AS MUTUALLY AGREED WITH OWNER.

3. SCRAPE TOPSOIL AND ORGANICS FROM THE GRADING AREA TO A MINIMUM 6 INCH DEPTH. STOCKPILE TOPSOIL IN APPROVED AREAS FOR FUTURE SITE RESTORATION OR DISPOSE OF AS MUTUALLY AGREED WITH OWNER.

4. SUBGRADE: COMPACT THE ENTIRE LENGTH AND WIDTH OF PROJECT AREA TO A DEPTH OF 12 INCHES AND TO A MINIMUM OF 95% STANDARD PROCTOR MAXIMUM DRY DENSITY AT ±2% OF OPTIMUM MOISTURE CONTENT.

5. PROOF ROLL SUBGRADE, WHEREBY THE ENTIRE ROADWAY LENGTH AND WIDTH IS ROLLED WITH A FULLY LOADED TANDEM AXLE DUMP TRUCK OR APPROVED EQUIVALENT WITH A MINIMUM GROSS WEIGHT OF 25 TONS. PERFORM PROOF ROLLING IN THE PRESENCE OF ON-SITE ENGINEER. THE SUBGRADE IS DEEMED ACCEPTABLE IF RUTTING NO GREATER THAN 1.5 INCHES, NOR "PUMPING" OF THE SOIL BEHIND THE LOADED TRUCK IS OBSERVED BY THE ON-SITE GEOTECHNICAL ENGINEER. IF THE SUBGRADE FAILS PROOF ROLLING, DETERMINE AND UNDERTAKE ALL MEANS NECESSARY UNTIL THE SUBGRADE PASSES THE TEST.

6. FILL: PLACE FILL IN MAXIMUM 8 INCH LIFTS COMPACTED TO A MINIMUM OF 95% STANDARD PROCTOR MAXIMUM DRY DENSITY AT -2% +3% OF OPTIMUM MOISTURE CONTENT.

7. BASE: COMPACT UNTREATED BASE COURSE TO MINIMUM THICKNESS AND WIDTH SPECIFIED AND TO A MINIMUM OF 98% STANDARD PROCTOR MAXIMUM DRY DENSITY AT -2% +3% OF OPTIMUM MOISTURE CONTENT.

8. MODULAR RETAINING WALL, INSTALL IN ACCORDANCE TO MANUFACTURER'S RECOMMENDATIONS.

E. TESTING AND INSPECTION

1. TESTING SHALL BE PERFORMED BY A DESIGNATED INDEPENDENT TESTING AGENCY.

2. FOR SUBGRADE SOILS THAT ARE ENCOUNTERED IN CONSTRUCTION, PERFORM GRAIN SIZE ANALYSIS, NATURAL MOISTURE CONTENT, AND STANDARD PROCTOR MAXIMUM DRY DENSITY TEST.

3. FOR COMPACTED SUBGRADE, PERFORM NOT LESS THAN FOUR (4) FIELD DENSITY TESTS. INDICATE TEST LOCATION, DRY DENSITY, MOISTURE CONTENT AND PERCENT STANDARD PROCTOR MAXIMUM DRY DENSITY ON RESULTS OF FIELD DENSITY TESTS.

4. FOR PROOF ROLL SUBMIT A RECORD OF PROOF ROLL INDICATING LOCATION, DATE, IF THE PROOF ROLLING PASSED, AND ANY STEPS TAKEN TO BRING THE SUBGRADE OR SHOULDER INTO COMPLIANCE IF THE PROOF ROLLING FAILED.

5. FOR IMPORTED FILL, PERFORM GRAIN SIZE ANALYSIS, NATURAL MOISTURE CONTENT, ATTERBERG LIMITS ON FINES CONTENT, AND STANDARD PROCTOR MAXIMUM DRY DENSITY TEST.

6. FOR PLACED AND COMPACTED FILLS, PERFORM TWO (2) FIELD DENSITY TESTS FOR EVERY COMPACTED 8" LIFT THAT IS PLACED. INDICATE TEST LOCATION, DRY DENSITY, MOISTURE CONTENT AND PERCENT STANDARD PROCTOR MAXIMUM DRY DENSITY ON RESULTS OF FIELD DENSITY TESTS.

7. FOR UNTREATED ROAD BASE MATERIAL, PERFORM GRAIN SIZE ANALYSIS, NATURAL MOISTURE CONTENT, AND STANDARD PROCTOR MAXIMUM DRY DENSITY TEST.

8. FOR PLACED AND COMPACTED BASE, PROVIDE NOT LESS THAN FOUR (4) FIELD DENSITY TESTS, INDICATE TEST LOCATION, DRY DENSITY, MOISTURE CONTENT AND PERCENT STANDARD PROCTOR MAXIMUM DRY DENSITY ON RESULTS OF FIELD DENSITY TESTS. VERIFY DEPTH AT TEST LOCATIONS ROAD OR AS DIRECTED BY OWNER.

PROFESSIONAL ENGINEER No. 10008287-2202 BETHANY KELLY STATE OF UTAH
10/14/19

ISSUED FOR CONSTRUCTION

REFERENCE DRAWINGS		
DRAWING NUMBER	REV	DRAWING DESCRIPTION
DEU-R-LG0012-PIP-001	0	LG0012-PIPING

WORK ORDERS	
WO NUMBER	DESCRIPTION
75963.22	NEW 2x2 REGULATOR STATION LG0012

REVISIONS				
NO	DESCRIPTION	DATE	BY	CHECK
0	ISSUED FOR CONSTRUCTION	10/14/2019	CAD	BSE

ENGINEERING RECORD
DRAWN BY: BARR/CAD
CHECKED BY: BARR/BSE
PROJECT ENGINEER: BARR/BSE
SURVEYOR: E. CLEMENTS
PROJECT MNGR: J. WIERZBICKI
CONSTR MNGR: D. FRANCIS

THE INFORMATION AND CONCEPTS CONTAINED IN THIS DOCUMENT ARE CONFIDENTIAL AND THE PROPERTY OF DOMINION ENERGY AND/OR THE CLIENT IDENTIFIED. DUPLICATION OR USE OF THIS INFORMATION AND/OR CONSTRUCTION OF SYSTEMS BASED ON THIS DOCUMENT ARE STRICTLY PROHIBITED WITHOUT WRITTEN AUTHORIZATION FROM DOMINION ENERGY.

Dominion Energy
DOMINION ENERGY UTAH

SECTION: 21 T11N R 01E
ELEVATION: 4551'
LAT: 41.674898 LONG: -111.834649
SCALE: NONE

LINE NUMBER: FL- 23
FACILITY: DISTRICT REGULATOR STATION LG0012
TITLE: 2x2 REGULATOR STATION
DESCRIPTION: SECTIONS, DETAILS AND SPECIFICATIONS
ADDRESS: 53 WEST 3200 SOUTH

CITY	COUNTY	STATE
NIBLEY	CACHE	UTAH

DRAWING NUMBER	SHEET	REVISION
DEU-R-LG0012-CCS-001	3 OF 3	0

CADD USER: Chicten A. Diaz FILE: M:\DESIGN\441819002.00\DEU-XX-LG0012-CCS-001-SHT3.DWG PLOT SCALE: 1:1 PLOT DATE: 10/14/2019 10:11 AM
DEU-XX-LG0012-CCS-001-SHT3.DWG - 10/14/2019 - 10:11am
DOMINION ENERGY_ANSI (D)

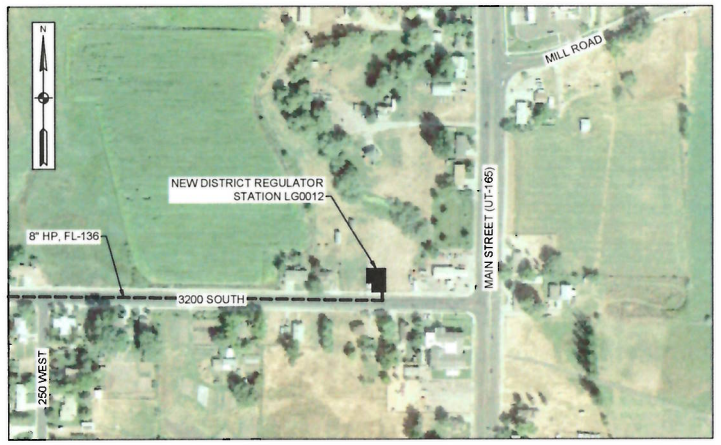

VICINITY MAP

TEST SPECIFICATIONS
(STANDARD PRACTICE 1-90-01)

	TS-1 (TEST SEGMENT)
MINIMUM TEST PRESSURE:	1080 PSIG
	(29.3% SMYS)
MAXIMUM TEST PRESSURE:	
WATER:	1999 PSIG 54.2% SMYS
NITROGEN:	1843 PSIG 50% SMYS
CNG:	N/A
TEST DURATION MINIMUM:	SHOP 1 HR
	FIELD 1 HR

FABRICATION SPECIFICATIONS
(STANDARD PRACTICE 2-10-01)

	SEGMENT 1
WELDING REQUIREMENTS:	API 1104
POST WELD HEAT TREATMENT:	NO
WELD INSPECTION:	VISUAL 100%
	NDE 100% > 2"
	STD. PRACTICE 3-15-01
JOB SPECIFIC REQUIREMENTS:	LOW HYDROGEN WELD
	FOR IN SERVICE
	FILLET WELD

MAOP DETERMINATION
(STANDARD PRACTICE 1-97-04)

	MAOP SEGMENT 1
DESIGN CLASS LOCATION:	3
DESIGN FACTOR (F):	F = 0.5
TEST PRESSURE (MINIMUM):	1080 PSIG
TEST FACTOR:	1.5
MINIMUM DESIGN PRESSURES	
A. PIPE (NOTE 14)	1843 PSIG
B. CALCULATED FITTINGS: (NOTE 14)	1941 PSIG
C. RATED ITEMS	720 PSIG
D. TEST PRESSURE (MIN) / TEST FACTOR:	
1080 PSIG / 1.5 =	720 PSIG
E. OTHER LIMITING FACTORS	
REGION MAOP	471 PSIG
SEGMENT MAOP (DESIGN) (MIN A, B, C, D)	720 PSIG
% SMYS @ SEGMENT MAOP	19.5%
PIPELINE MAOP (OPERATING) (MIN A, B, C, D, E)	471 PSIG
% SMYS @ PIPELINE MAOP	12.7%

REFER TO STANDARD PRACTICE 3-10-04 FOR IHP TEST

PROJECT CONTACTS

PROJECT ENGINEER / MANAGER:	JANEK WIERZBICKI	(801) 230-9703
CORROSION:	KELLY FACER	(801) 201-5528
HP SURVEYOR:	ENOCH CLEMENCE	(801) 793-7950
LEAD INSPECTOR:	TBD	TBD
IHP SUPERVISOR:	KURTIS FREDERICKS	(801) 230-6947
RIGHT OF WAY AGENT:	TODD CASSITY	(801) 201-5717
ENVIRONMENTAL / HEALTH & SAFETY:	LAURA STRINGSTEIN	(801) 209-5207

MATERIAL LIST
NOTE 3

ITEM #	QTY	SIZE	DESCRIPTION	MAWP NOTE 14	MAOP SEG	MATL NOTES NOTE 4	WH #
WO #: 01045854.23							
1	12	8"	BOLT, STUD, 1-1/8 x 7 1/2" LG, ASTM A193 GR-B7, W/2 HEX NUTS, 1-1/8, ASTM A194 GR-2H	N/A	HP	7	Q3400336
2	2	8"	ELL, CS, 45 DEG SR, SEGMENTABLE, BW, 8.625 OD 0.322 WT, Y-52, MSS SP75, ASTM A694	1941	HP	3	Q1788545
3	1	8"	FLANGE, BLIND, CL600, RF, 8 NPS, ASTM A105	1480	HP	5	Q1808095
4	1	8"	GASKET, 8" ND, 600 LB, GARLOCK 9900	1333	HP	9	Q1908006
5	1	8"x4"	TEE, CS, RDCD, BW, BARRED, 8.625 OD 0.322 WT x 4.500 OD 0.237 WT, Y-52, MSS SP75, ASTM A694	1941	HP	3	Q2558043
6	1	8"x6"	TEE, CS, RDCD, BW, BARRED, 8.625 OD 0.322 WT x 6.625 OD 0.280 WT, Y-52, MSS SP75, ASTM A694	1941	HP	3	Q2558066
7	1	8"	VALVE, CS, BALL, CL600, 8 NPS, FULL PORT, BW x RF, 0.322 WT, API 6D, CAMERON, FIG 800603-2-1	1480	HP	1	Q2705083
8	1	6"	VALVE, CS, PLUG, CL600, 6 NPS, BW x RF, NORDSTROM, FIG 2249 1/4	1480	HP	1	Q2746271
9	8	4"	BOLT, STUD, 7/8 x 5 3/4" LG, ASTM A193 GR-B7, W/2 HEX NUTS, 7/8, ASTM A194 GR-2H	N/A	HP	7	Q3400164
10	1	4"	CAP, CS, BLANKING, BW, CL600, 4 NPS, 0.237 WT, HUBBER-VALE W/ 1/2" TAP	1480	HP	16	Q1184001
11	1	4"	FLANGE, RFWN, CL600, 4 NPS, 0.237 WT, GR-B, ASME B16.5, ASTM A105	1480	HP	5	Q1804070
12	1	4"	GASKET, 4" ND, 600 LB, GARLOCK 9900	1333	HP	9	Q1904006
13	1	4"	VALVE, CS, PLUG, CL600, 4 NPS, BW x RF, NORDSTROM, 2245 1/4	1480	HP	1	Q2744247
14	1	2"	PIG SIG, 3000#, ENDURO, PIG POPPER, FIG 200-19-10826, 4" NIPPLE, FOR RUN SIZE 6-24	3000	HP	4	Q5329000
15	2	1/2"	NIPPLE, CS, NPT x NPT, 1/2 NPS x 2 LG, 0.294 WT, A106 GR-B SMLS	9875	HP	19	Q2000553
16	2	1/2"	PARKER BLEED PLUG, CS, 10000#, MNPT, 1/2", BV10N4-80	10000	HP	17	Q2700510
17	1	1/2"	THREADOLET, 1/2 NPS 3000# OUTLET, GR-B, B16.9, ASTM A105, FOR RUN SIZES 3/4 TO 36	3000	HP	4	Q1250501
18	1	1/2"	VALVE, CS, BALL, 2200 CWP, 1/2 NPS, FNPT x FNPT, SWAGELOK, S-63TF8, W/ LOCKING DEVICE	2200	HP	N/A	Q2700522
19	1	1/2"	VALVE, CS, PLUG, CL600, 1/2 NPS, 3TD PORT, FNPT x FNPT, NORDSTROM, FIG 2224	1480	HP	N/A	Q2740501
20	1	8"	PIPE SUPPORT, EZ LINE, DOUBLE U-BOLT, MODEL# 510-RR ("D" = 11-6 3/8") - SEE DWG DE-STD-GEN-CCS-002 FOR DETAILS AND SPECIFICATIONS	N/A	N/A	N/A	42331215
WO #: 75963.22							
30	1	12'x12'	BUILDING, STEEL, 12'x12' REGULATOR BUILDING - SEE DWG QGC-V-BLD-CCS-010 FOR DETAILS	N/A	N/A	N/A	N/A
31	1	2"x2"	REGULATOR STATION, 2"x2" MOONEY - SEE DWG DE-STD-REG-PIP-001 FOR DETAILS	720	HP / IHP	N/A	N/A
32	20	8"	BOLT, STUD, 7/8 x 6" LG, ASTM A193 GR-B7, W/2 HEX NUTS, 7/8, ASTM A194 GR-2H	N/A	IHP	7	Q3400166
33	6	8"	ELL, CS, 45 DEG LR, BW, 8.625 OD 0.322 WT, Y-52, MSS SP75, ASTM A694	1941	IHP	3	Q1758007
34	2	8"	ELL, CS, 90 DEG LR, BW, 8.625 OD 0.322 WT, Y-52, MSS SP75, ASTM A694	1941	IHP	3	1758005
35	2	8"	FLANGE, RFWN, CL300, 8 NPS, 0.322 WT, F-52, MSS SP44, ASTM A694	740	IHP	6	1808007
36	1	6"	FLANGE, RFWN, CL600, 6 NPS, 0.322 WT, F-52, MSS SP44, ASTM A694	1480	HP / IHP	6	Q1808025
37	2	8"	GASKET, 8" ND, 300 LB, GARLOCK 9900	1333	IHP	9	Q1908003
38	1	8"	STEEL TO PLASTIC TRANSITION FITTING, SDR 11.5	70	IHP	N/A	Q4078001
39	1	8"x3"	TEE, CS, RDCD, BW, 8.625 OD 0.322 WT x 3.500 OD 0.216 WT, Y-52, MSS SP75, ASTM A694	1941	IHP	3	Q2558035
40	1	8"	VALVE, IRON, PLUG, 500 CWP, 8 NPS, RF x RF, NORDSTROM, FIG 1580 (REQ 4-7/8"x3 3/4" CAP SCREWS, NCT W/ #3400095)	500	IHP	1	Q2748015
41	12	6"	BOLT, STUD, 1 x 7 1/4" LG, ASTM A193 GR-B7, W/2 HEX NUTS, 1, ASTM A194 GR-2H	N/A	HP	7	Q3400219
42	7	6"	ELL, CS, 45 DEG LR, BW, 6.625 OD 0.280 WT, Y-52, MSS SP75, ASTM A694	2197	HP	3	Q1756005
43	4	6"	ELL, CS, 90 DEG LR, BW, 6.625 OD 0.280 WT, Y-52, MSS SP75, ASTM A694	2198	HP	3	Q1756004
44	2	6"	FLANGE, RFWN, CL600, 6 NPS, 0.280 WT, F-52, MSS SP44, ASTM A694	1480	HP	6	Q1806007
45	1	6"	GASKET, INSULATING, CL600, RF, 6 NPS, TYPE F, PLAIN PHENOLIC GASKET, HDPE SLEEVE, 1 PHENOLIC WASHER PER BOLT	1480	HP	10	Q4436061
46	2	6"x3"	TEE, CS, RDCD, BW, 6.625 OD 0.280 WT x 3.500 OD 0.216 WT, Y-52, MSS SP75, ASTM A694	2197	HP	3	Q2556032
47	2	6"x4"	TEE, CS, RDCD, BW, 6.625 OD 0.280 WT x 4.500 OD 0.237 WT, Y-52, MSS SP75, ASTM A694	2197	HP	3	Q2556042
48	1	6"	VALVE, CS, BALL, CL600, 6 NPS, FULL PORT, BW x BW, 0.280 WT, API 6D, CAMERON, FIG 800603-2-1	1480	HP	1	Q2705065
49	16	4"	BOLT, STUD, 7/8 x 5 3/4" LG, ASTM A193 GR-B7, W/2 HEX NUTS, 7/8, ASTM A194 GR-2H	N/A	HP	7	Q3400164
50	2	4"	FLANGE, BLIND, CL600, RF, 4 NPS, ASTM A105	1480	HP	5	Q1804005
51	2	4"	FLANGE, RFWN, CL600, 4 NPS, 0.237 WT, GR-B, ASME B16.5, ASTM A105	1480	HP	5	Q1804070
52	2	4"	GASKET, 4" ND, 600 LB, GARLOCK 9900	1333	HP	9	Q1904006
53	8	3"	BOLT, STUD, 3/4 x 5 1/2" LG, ASTM A193 GR-B7, W/2 HEX NUTS, 3/4, ASTM A194 GR-2H	N/A	IHP	7	Q3400142
54	8	3"	BOLT, STUD, 3/4 x 5" LG, ASTM A193 GR B7, W/2 HEX NUTS, 3/4, ASTM A194 GR 2H	N/A	HP	7	Q3400138
55	1	3"	CAP, CS, BLANKING, BW, CL600, 3 NPS, 0.300 WT, HUBBER-VALE W/ 1/2" TAP	1480	HP	10	Q1183003
56	2	3"	FLANGE, RFWN, CL600, 3 NPS, 0.300 WT, GR-B, ASME B16.5, ASTM A105	1480	HP / IHP	5	Q1803070
57	1	3"	GASKET, 3" ND, 600 LB, GARLOCK 9900	1333	HP	9	Q1903003
58	1	3"	GASKET, INSULATING, CL600, RF, 3 NPS, TYPE F, PLAIN PHENOLIC GASKET, HDPE SLEEVE, 1 PHENOLIC WASHER PER BOLT	1480	IHP	10	Q4433061
59	1	3"	VALVE, CS, BALL, CL600, 3 NPS, FULL PORT, BW x BW, 0.300 WT, API 6D, UNION TECH, Z4	1480	HP	1	4336077
60	2	3"	VALVE, CS, PLUG, CL600, 3 NPS, BW x RF, NORDSTROM, 2245 1/4	1480	IHP	1	Q2740215
61	8	1/2"	NIPPLE, CS, NPT x NPT, 1/2 NPS x 2 LG, 0.294 WT, A106 GR-B SMLS	9875	HP	19	Q2000553
62	8	1/2"	PARKER BLEED PLUG, CS, 10000#, MNPT, 1/2", BV10N4-80	10000	HP	17	Q2700510
63	7	1/2"	THREADOLET, 1/2 NPS 3000# OUTLET, GR-B, B16.9, ASTM A105, FOR RUN SIZES 3/4 TO 36	3000	HP	4	Q1250501
64	7	1/2"	VALVE, CS, BALL, 2200 CWP, 1/2 NPS, FNPT x FNPT, SWAGELOK, S-63TF8, W/ LOCKING DEVICE	2200	HP	N/A	Q2700522
65	1	1/2"	VALVE, CS, PLUG, CL600, 1/2 NPS, 3TD PORT, FNPT x FNPT, NORDSTROM, FIG 2224	1480	IHP	N/A	Q2740501
66	180	BAGS	GLSULATE 500 XR THERMAL INSULATION, (APPROX 110.5 LF = 180.11 CUBIC FEET)	N/A	N/A	N/A	Q4270003

PRESSURE PIPING
NOTE 6

ITEM #	SIZE	DESCRIPTION	FOOTAGE	O.D.	SMYS	W.T.	MAWP NOTE 14	MAOP SEG	WH #
WO# : 01045854.23									
P1	8"	PIPE, CS, FBE CTG, 8.625 OD, 0.322 WT, X52, API 5L PSL2, ERW	12'	8.625"	52,000	0.322"	1941	HP	Q0208022
P2	8"	PIPE, CS, BARE, 8.625 OD, 0.322 WT, X52, API 5L PSL2, ERW	1'	8.625"	52,000	0.322"	1941	HP	Q0108012
P3	4"	PIPE, CS, BARE, 4.500 OD, 0.237 WT, GR B, API 5L PSL2, ERW	2'	4.5"	35,000	0.237"	1843	HP	Q0104000
P4	4"	PIPE, CS, FBE CTG, 4.500 OD, 0.237 WT, GR B, API 5L PSL2, SMLS	6'	4.5"	35,000	0.237"	1843	HP	Q0204023
WO# : 75963.22									
P5	8"	PIPE, CS, FBE CTG, 8.625 OD, 0.322 WT, X52, API 5L PSL2, ERW	113'	8.625"	52,000	0.322"	1941	IHP	Q0208022
P6	8"	PIPE, CS, BARE, 8.625 OD, 0.322 WT, X52, API 5L PSL2, ERW	17'	8.625"	52,000	0.322"	1941	HP / IHP	Q0108012
P7	6"	PIPE, CS, FBE CTG, 6.625 OD, 0.280 WT, X52, API 5L PSL2, ERW	9'	6.625"	52,000	0.28"	2198	HP	Q0206019
P8	6"	PIPE, CS, BARE, 6.625 OD, 0.280 WT, X52, API 5L PSL2, ERW	105'	6.625"	52,000	0.28"	2197	HP	Q0106045
P9	4"	PIPE, CS, BARE, 4.500 OD, 0.237 WT, GR B, API 5L PSL2, ERW	2'	4.5"	35,000	0.237"	1843	HP	Q0104000
P10	3"	PIPE, CS, BARE, 3.500 OD, 0.300 WT, GR B, ASTM A106, SMLS	2'	3.5"	35,000	0.3"	3000	HP	Q0103011
P11	3"	PIPE, CS, FBE CTG, 3.500 OD, 0.300 WT, GR B, ASTM A106, SMLS	7'	3.5"	35,000	0.3"	3000	HP	Q0203011

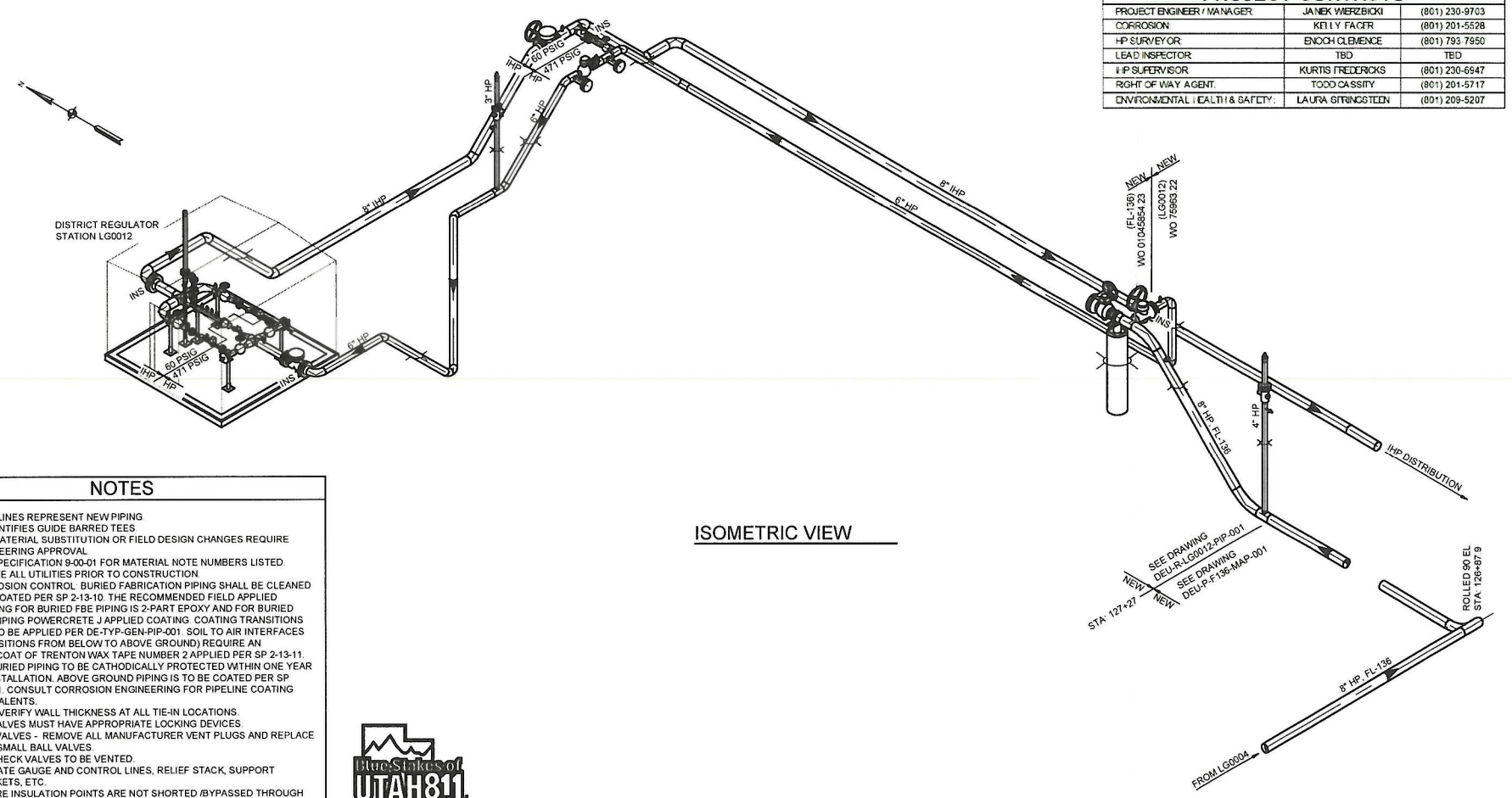

ISOMETRIC VIEW

NOTES

1. BOLD LINES REPRESENT NEW PIPING.
2. IHP IDENTIFIES GUIDE BARRED TEES.
3. ANY MATERIAL SUBSTITUTION OR FIELD DESIGN CHANGES REQUIRE ENGINEERING APPROVAL.
4. SEE SPECIFICATION 9-00-01 FOR MATERIAL NOTE NUMBERS LISTED.
5. LOCATE ALL UTILITIES PRIOR TO CONSTRUCTION.
6. CORROSION CONTROL: BURIED FABRICATION PIPING SHALL BE CLEANED AND COATED PER SP 2-13-10. THE RECOMMENDED FIELD APPLIED COATING FOR BURIED FBE PIPING IS 2-PART EPOXY AND FOR BURIED ARO PIPING POWERCRETE J APPLIED COATING. COATING TRANSITIONS ARE TO BE APPLIED PER DE-TYP-GEN-PIP-001. SOIL TO AIR INTERFACES (TRANSITIONS FROM BELOW TO ABOVE GROUND) REQUIRE AN OVERCOAT OF TRENTON WAX TAPE NUMBER 2 APPLIED PER SP 2-13-11. ALL BURIED PIPING TO BE CATHODICALLY PROTECTED WITHIN ONE YEAR OF INSTALLATION. ABOVE GROUND PIPING IS TO BE COATED PER SP 2-13-11. CONSULT CORROSION ENGINEERING FOR PIPELINE COATING EQUIVALENTS.
7. FIELD VERIFY WALL THICKNESS AT ALL TIE-IN LOCATIONS.
8. ALL VALVES MUST HAVE APPROPRIATE LOCKING DEVICES.
9. BALL VALVES - REMOVE ALL MANUFACTURER VENT PLUGS AND REPLACE WITH SMALL BALL VALVES.
10. ALL CHECK VALVES TO BE VENTED.
11. INSULATE GAUGE AND CONTROL LINES, RELIEF STACK, SUPPORT BRACKETS, ETC.
12. ENSURE INSULATION POINTS ARE NOT SHORTED /BYPASSED THROUGH FUEL GAS PIPING, ELECTRICAL CONDUIT, ETC. THAT ARE ATTACHED TO THE PIPE SUPPORTS.
13. ALL PIPE SHALL HAVE MILL TEST REPORTS (MTR'S) AS DEFINED WITHIN STANDARD PRACTICE 3-95-01.
14. THE FORMULA USED TO CALCULATE THE MAWP FOR ALL STEEL PIPE AND NON-RATED FITTINGS IS P=(2St/D) x F x E x T, WHERE F=0.5 FOR A CLASS 3 LOCATION, E=1, AND T=1.
15. 2" IN SERVICE FILLET WELDS SHALL RECEIVE 100% NDE.

Blue Stakes of UTAH 811
bluestakes.org
CALL TWO BUSINESS DAYS BEFORE YOU DIG TO HAVE UTILITIES LOCATED
811 or 1-800-662-4111

ISSUED FOR CONSTRUCTION

REFERENCE DRAWINGS

DRAWING NUMBER	REV	DRAWING DESCRIPTION
QGC-V-BLD-CCS-010	1	STANDARD 12'x12' STEEL BUILDING DETAILS
DE-STD-REG-PIP-001	3	STANDARD 2"x2" REGULATOR STATION - MOONEY
DE-STD-GEN-CCS-002	0	STANDARD EZ LINE PIPE SUPPORT DETAILS
DEU-P-F136-MAP-001	0	FL-136 ALIGNMENT: 2.5 MILES OF 8" HP
DEU-R-LG0012-PID-001	0	LG0012 - PIPING AND INSTRUMENTATION DIAGRAM

WORK ORDERS

WO NUMBER	DESCRIPTION
01045854.23	FL-136 INSTALL 2.5 MILES OF 8" HP PIPE FROM LG0004 TO LG0012
75963.22	INSTALL 2x2 REGULATOR STATION LG0012

REVISIONS

NO	DESCRIPTION	DATE	BY	CHECK
0	ISSUED FOR CONSTRUCTION	06/01/20	IAT	DGB

ENGINEERING RECORD

DRAWN BY: I. TORRES
CHECKED BY: D. BROX
PROJECT ENGR: J. WEIRZBICKI
SURVEYOR: E. CLEMENCE
ENGR MNGR: S. MESSERSMITH
CONSTR MNGR: D. FRANCIS

THE INFORMATION AND CONCEPTS CONTAINED IN THIS DOCUMENT ARE CONFIDENTIAL AND THE PROPERTY OF DOMINION ENERGY AND/OR THE CLIENT IDENTIFIED. DUPLICATION OR USE OF THIS INFORMATION AND/OR CONSTRUCTION OF SYSTEMS BASED ON THIS DOCUMENT ARE STRICTLY PROHIBITED WITHOUT WRITTEN AUTHORIZATION FROM DOMINION ENERGY.

Dominion Energy®
DOMINION ENERGY UTAH

SECTION: 21 T11N R1E
ELEVATION: 4551'
LAT: 41.6749 LONG: -111.8346
SCALE: NONE

LINE NUMBER:
FACILITY: FL- 136
TITLE: DISTRICT REGULATOR STATION LG0012
DESCRIPTION: 2"x2" REGULATOR STATION AND END FACILITY
ADDRESS: ISOMETRIC VIEW, VICINITY MAP, AND MATERIALS
52 WEST 3200 SOUTH

CITY	COUNTY	STATE
NIBLEY	CACHE	UTAH

DRAWING NUMBER	SHEET	REVISION
DEU-R-LG0012-PIP-001	1 OF 3	0

DOMINION ENERGY_ANSI_D

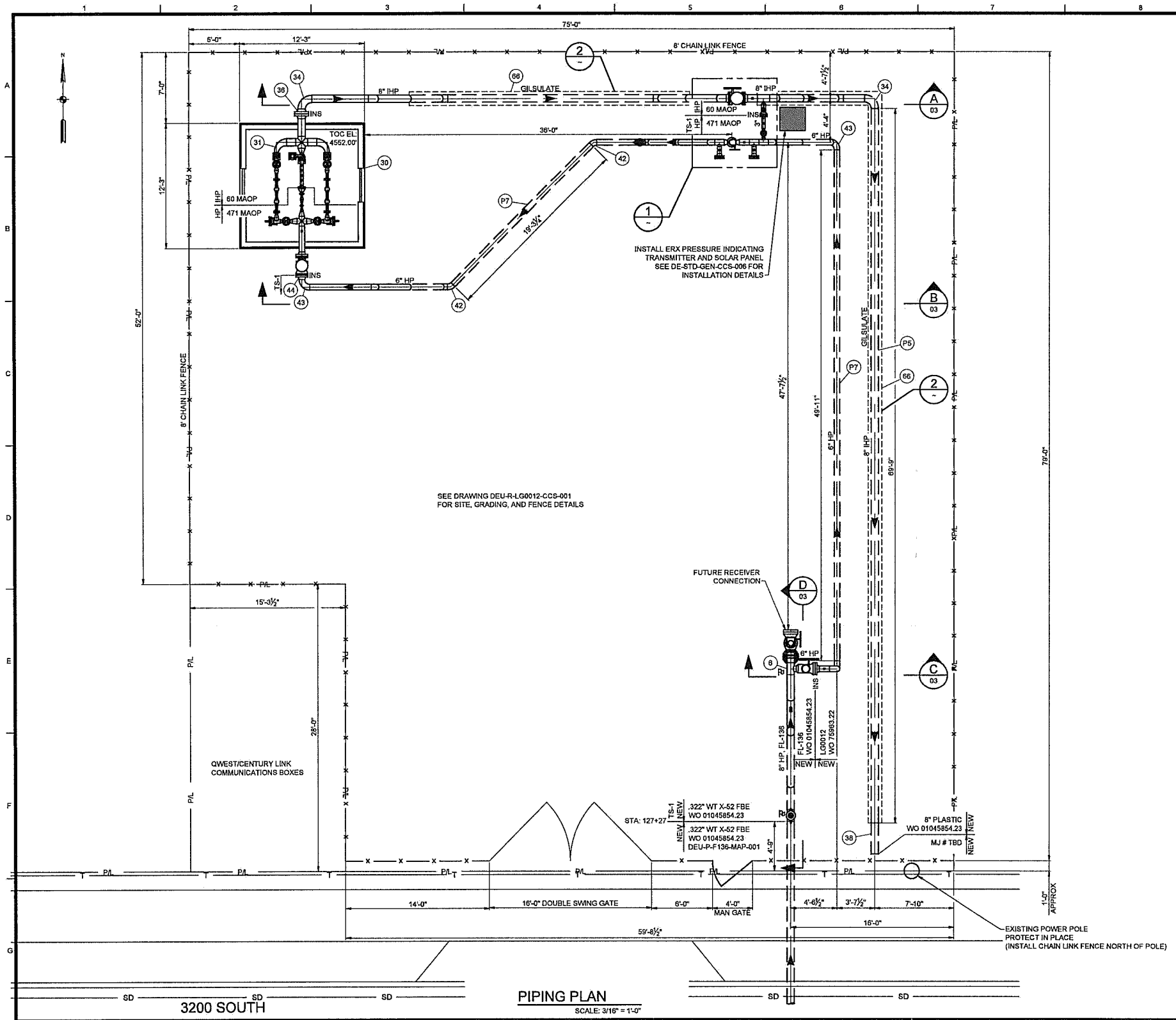

PIPING PLAN

SCALE: 3/16" = 1'-0"

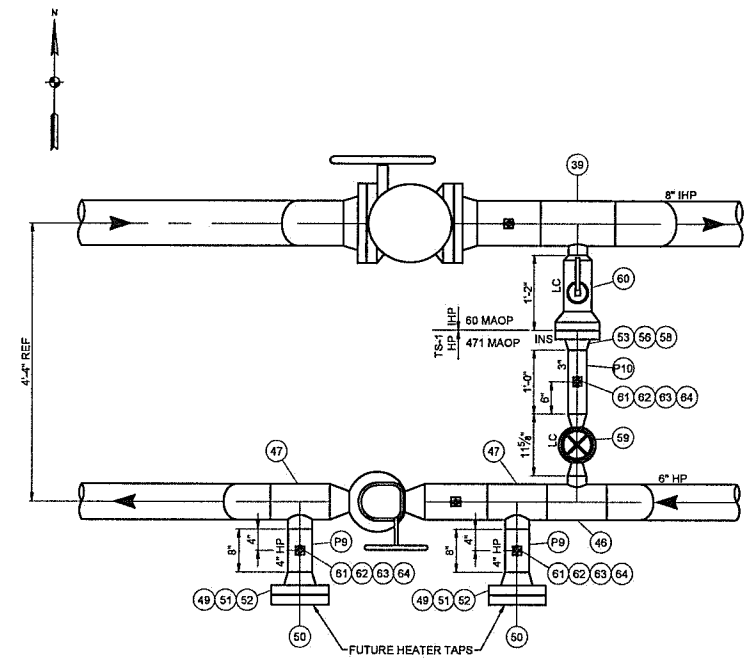

BYPASS DETAIL 1

SCALE: 3/4" = 1'-0"

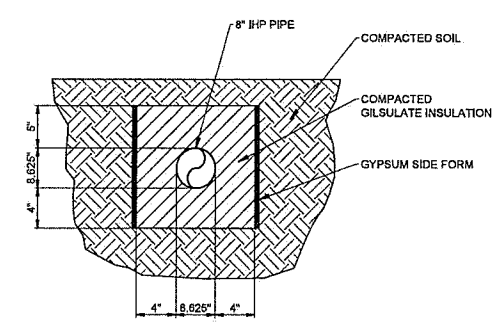

GILSULATE INSULATION DETAIL 2

1.63 CU FT / 1 LF

SCALE: NONE

ISSUED FOR CONSTRUCTION

REFERENCE DRAWINGS		
DRAWING NUMBER	REV	DRAWING DESCRIPTION
QGC-V-BLD-CCS-010	1	STANDARD 12'x12' STEEL BUILDING DETAILS
DE-STD-REG-PIP-001	3	STANDARD 2"x2" REGULATOR STATION - MOONEY
DE-STD-GEN-CCS-002	0	STANDARD EZ LINE PIPE SUPPORT DETAILS
DEU-P-F135-MAP-001	0	FL-136 ALIGNMENT: 2.5 MILES OF 8" HP
DEU-R-LG0012-PID-001	0	LG0012 - PIPING AND INSTRUMENTATION DIAGRAM

THE INFORMATION AND CONCEPTS CONTAINED IN THIS DOCUMENT ARE CONFIDENTIAL AND THE PROPERTY OF DOMINION ENERGY AND/OR THE CLIENT IDENTIFIED. DUPLICATION OR USE OF THIS INFORMATION AND/OR CONSTRUCTION OF SYSTEMS BASED ON THIS DOCUMENT ARE STRICTLY PROHIBITED WITHOUT WRITTEN AUTHORIZATION FROM DOMINION ENERGY.

WORK ORDERS	
WO NUMBER	DESCRIPTION
01045854.23	FL-136 INSTALL 2.5 MILES OF 8" HP PIPE FROM LG0004 TO LG0012
75963.22	INSTALL 2x2 REGULATOR STATION LG0012

REVISIONS				
NO	DESCRIPTION	DATE	BY	CHECK
0	ISSUED FOR CONSTRUCTION	06/01/20	IAT	DGB

ENGINEERING RECORD
DRAWN BY: I. TORRES
CHECKED BY: D. BROX
PROJECT ENGR: J. WEIRZBICKI
SURVEYOR: E. CLEMENCE
ENGR MNGR: S. MESSERSMITH
CONSTR MNGR: D. FRANCIS

Dominion Energy

DOMINION ENERGY UTAH

SECTION: 21 T11N R 1E

ELEVATION: 4551'

LAT: 41.6749 LONG: -111.8346

SCALE: AS SHOWN

LINE NUMBER:

FACILITY: FL- 136

TITLE: DISTRICT REGULATOR STATION LG0012

DESCRIPTION: 2"x2" REGULATOR STATION AND END FACILITY

ADDRESS: PIPING PLAN AND DETAILS 52 WEST 3200 SOUTH

CITY	COUNTY	STATE
NIBLEY	CACHE	UTAH

DRAWING NUMBER	SHEET	REVISION
DEU-R-LG0012-PIP-001	2 OF 3	0

DEU-R-LG0012-PIP-001-02.dwg - 11/13/2020 - 11:54am

DOMINION ENERGY_ANSI_D

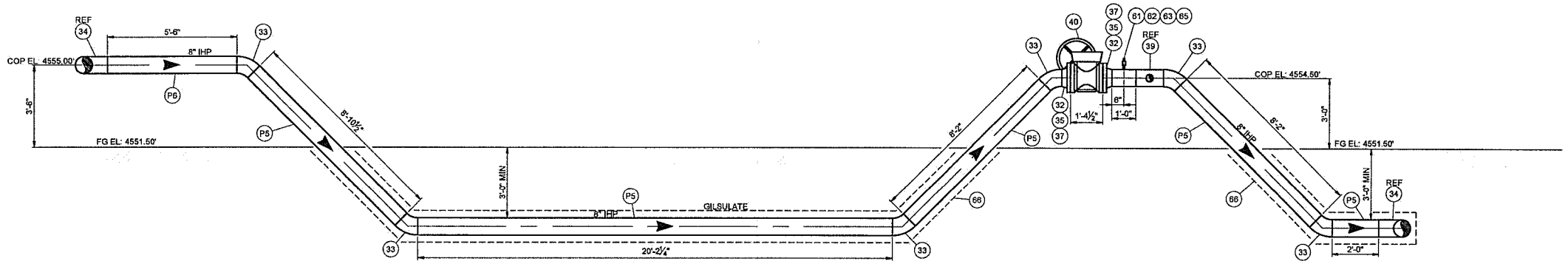

SECTION A 02

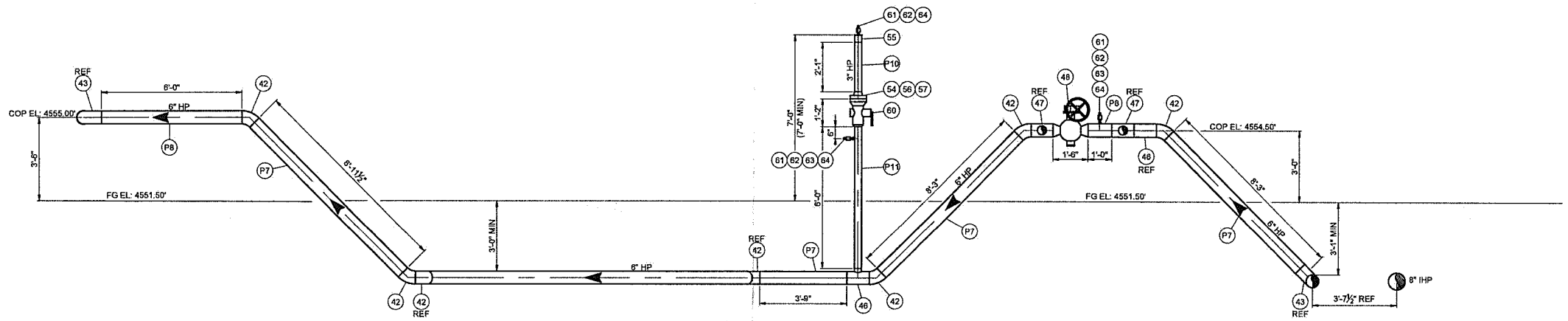

SECTION B 02

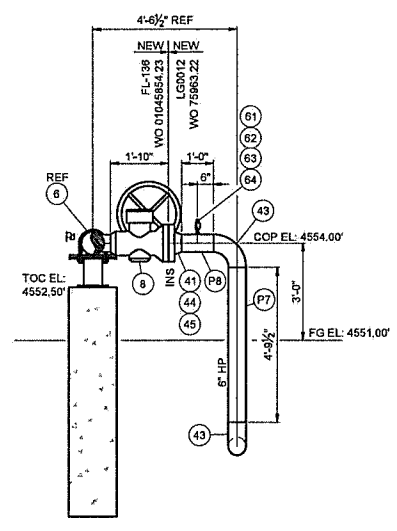

SECTION C 02

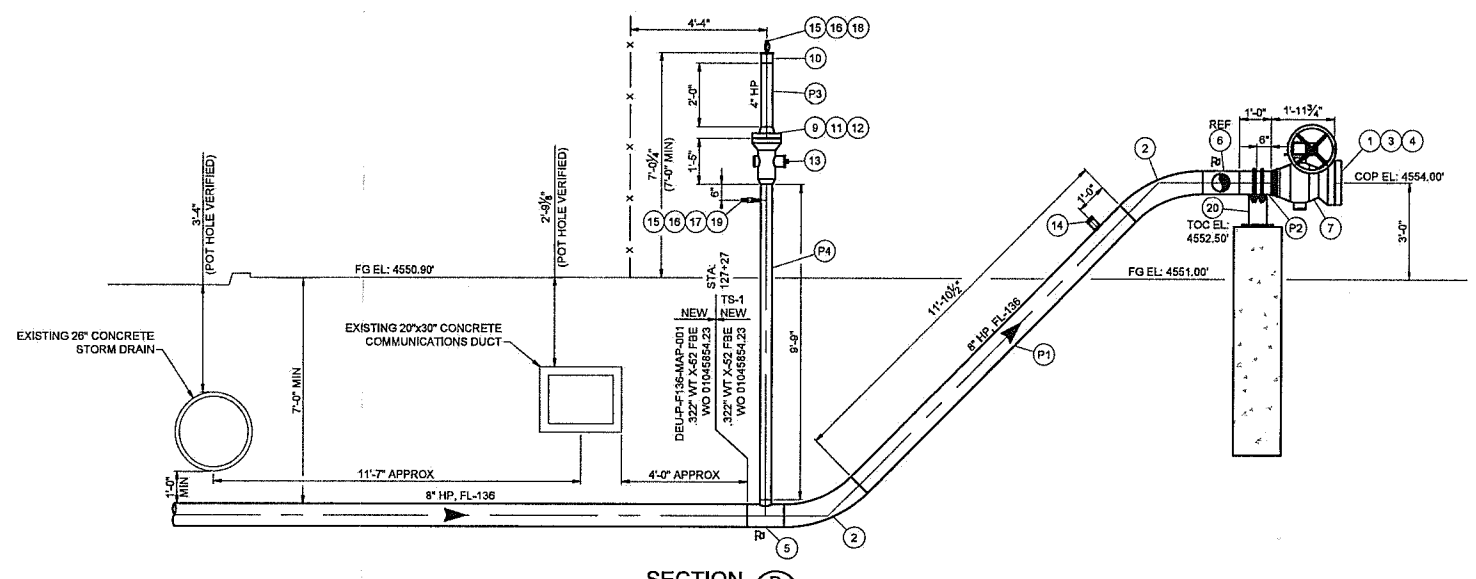

SECTION D 02

ISSUED FOR CONSTRUCTION

REFERENCE DRAWINGS		
DRAWING NUMBER	REV	DRAWING DESCRIPTION
QGC-V-BLD-CCS-010	1	STANDARD 12'x12' STEEL BUILDING DETAILS
DE-STD-REG-PIP-001	3	STANDARD 2"x2" REGULATOR STATION - MOONEY
DE-STD-GEN-CCS-002	0	STANDARD EZ LINE PIPE SUPPORT DETAILS
DEU-P-F136-MAP-001	0	FL-136 ALIGNMENT: 2.5 MILES OF 8" HP
DEU-R-LG0012-PID-001	0	LG0012 - PIPING AND INSTRUMENTATION DIAGRAM

THE INFORMATION AND CONCEPTS CONTAINED IN THIS DOCUMENT ARE CONFIDENTIAL AND THE PROPERTY OF DOMINION ENERGY AND/OR THE CLIENT IDENTIFIED. DUPLICATION OR USE OF THIS INFORMATION AND/OR CONSTRUCTION OF SYSTEMS BASED ON THIS DOCUMENT ARE STRICTLY PROHIBITED WITHOUT WRITTEN AUTHORIZATION FROM DOMINION ENERGY.

WORK ORDERS	
WO NUMBER	DESCRIPTION
01045854.23	FL-136 INSTALL 2.5 MILES OF 8" HP PIPE FROM LG0004 TO LG0012
75963.22	INSTALL 2x2 REGULATOR STATION LG0012

REVISIONS				
NO	DESCRIPTION	DATE	BY	CHECK
0	ISSUED FOR CONSTRUCTION	06/01/20	IAT	DGB

ENGINEERING RECORD
DRAWN BY: I. TORRES
CHECKED BY: D. BROX
PROJECT ENGR: J. WEIRZBICKI
SURVEYOR: E. CLEMENCE
ENGR MNGR: S. MESSERSMITH
CONSTR MNGR: D. FRANCIS

Dominion Energy

DOMINION ENERGY UTAH

SECTION: 21 T11N R 1E
ELEVATION: 4551'
LAT: 41.6749 LONG: -111.8346
SCALE: 3/8" = 1'-0"

LINE NUMBER:
FACILITY: FL- 136
TITLE: DISTRICT REGULATOR STATION LG0012
DESCRIPTION: 2"x2" REGULATOR STATION AND END FACILITY
ADDRESS: SECTIONS 52 WEST 3200 SOUTH

CITY	COUNTY	STATE
NIBLEY	CACHE	UTAH

DRAWING NUMBER	SHEET	REVISION
DEU-R-LG0012-PIP-001	3 OF 3	0

DEU-R-LG0012-PIP-001.dwg 11/19/2020 - 11:39am

DOMINION ENERGY_ANSI_D

GENERAL STRUCTURAL NOTES

1. 2015 International Building Code Design Criteria (ASCE 7-10)

A. Floor Live Load . . . . . N.A.
B. Roof Live Load . . . . . 20 psf
C. Roof Snow Load Data
Ground Snow Load P_g . . . . . 71.42 psf Minimum
Flat-roof Snow Load P_f . . . . . 50 psf Maximum
Exposure Factor C_e 1.0
Importance Factor I_s 1.0
Thermal Factor C_t 1.0
E. Wind Design Data
Ultimate Design Wind Speed V_{ult} . . . . . 115 mph
Nominal Design Wind Speed V_{asd} . . . . . 90 mph
Risk Category II
Exposure C
Component & Cladding . . . . . See ASCE 7-10 Chapter 30
F. Earthquake Design Data
Risk Category II
Importance Factor I_e 1.0
Mapped Spectral Parameters
S_s 1.500g
S_1 . . . . . 0.644g
Site Class . . . . . D
Design Spectral Parameters
S_{DS} 1.000g
S_{D1} 0.844g
Seismic Design Category . . . . . D
Seismic Force Resisting System . . . . . OSMF,
Seismic Response Coefficient C_s 0.3069W
Response Modification Factor R 3.5, 3.25
Analysis Procedure . . . . . Equivalent Lateral Force Procedure
G. Frost Depth . . . . . As Required Per Local Requirements

2. Structural Steel

A. Material:
i. Angles, Plates, and Channels: ASTM A36 (Fy = 36 k.s.i.)
ii. Wide Flanges: ASTM A992 (Fy = 50 k.s.i.).
iii. Tubes (HSS): ASTM A500, Grade B (Fy = 46 k.s.i.)
iv. Pipes: ASTM A53, Grade B (Fy = 35 k.s.i.)
B. Fabrication and construction shall comply with the latest edition of the following Codes and Standards:
i. American Institute of Steel Construction (AISC) "Specification for Structural Steel Buildings." (360-10)
ii. AISC "Seismic Provisions for Structural Steel Buildings," including supplement No. 1 (341-10)
iii. AISC "Code of Standard Practice."
iv. RCSC "Specification for Structural Joints Using ASTM A325 or A490 Bolts."
v. Steel Joist Institute (SJI), "Standard Specifications and Code of Standard Practice."
vi. American Welding Society (AWS), Structural Welding Code (specific items do not apply when they conflict with the AISC requirements).
vii. American Iron and Steel Institute (AISI), "Specification for the Design of Cold-Formed Steel Structural Members".
C. Welding:
i. Certification of Welders: All shop and field welding shall be executed by AWS certified welders. Certification shall be considered current if dated within the past 12 months. Welders will be considered certified if they have been certified by AWS and their work records are current within every six month period thereafter as required by AWS. Certification and records must comply with AWS Standards. Certification and appropriate records must be provided to the inspector prior to beginning work.
ii. Electrodes: E-70XX or as noted otherwise. E-60XX may be used for welding steel floor and roof decks.
iii. Minimum Welds: All intersecting steel shapes which are not bolted shall be connected by a fillet weld all around, unless noted otherwise.
iv. Welded reinforcing bars shall be ASTM A706 Grade 60.
D. Bolted Connections:
i. Use ASTM A325N bolts for hot-rolled steel to steel (e.g. girder to column, rafter to column/cap plate, beam to beam, etc.) connections unless noted otherwise in the drawings. All connections shall conform to the RCSC "Specification for Structural Joints Using ASTM A325 or A490 Bolts".
ii. A325 bolts shall be pretensioned using an acceptable method such as "turn of the Nut" as per the RCSC Specification Section 8.2 at all 8-bolt wide flange to wide flange ridge and haunch connections only.
iii. All other A325 bolts shall be fully tightened to the "Snug Tight" condition in accordance with the RCSC Specification Section 8.1.
E. Provide full height web stiffener plates to each side of all beams bearing on top of columns. Plate thickness shall match the thickness of the beam web except that the thickness need not exceed 1/4" unless noted otherwise on drawings.
F. All structural steel, except plates embedded in concrete or masonry, to have one coat (min.) of gray shop primer, 1.5 mil minimum thickness.
G. Cold Formed Girts & Purlins:
i. All cold formed cees, zees, and eave struts shall be MBCI standard or equal.
ii. All girt and purlin connection bolts shall be CR-5 or equal.
H. Use 26 gage roof and wall panels with trims as required.
J. Flange braces as shown by marks UB and FB to be 2"x2"x3/16" angle.
K. Steel Stairs, Handrails, and Guardrails
i. Design of steel stairs, handrails, and guardrails is not by Mountain View Engineering.
ii. All stairs, handrails, and guardrails shall comply with the requirements of the 2015 IBC unless noted otherwise in the project specifications.
iii. The fabricator shall be responsible for the design and certification of all steel stairs, handrails, and guardrails, including member sizes and connection details.
iv. See the architectural plans for all stair information including, but not limited to, stair layout, dimensions, and style.

3. Miscellaneous

A. The project specifications are not superseded by the General Structural Notes. Notes and details on the drawings shall take precedence over General Structural Notes and typical details. Should any of the detailed instructions shown on the plans conflict with the General Structural Notes, or with each other, the strictest provisions shall govern.
B. It is solely the responsibility of each contractor to follow all applicable safety codes and regulations during all phases of construction. The engineer is not engaged in, and does not supervise, construction.
C. Erection, Shoring, and Bracing
i. It is the contractor's responsibility to determine erection procedures and sequence, and to ensure the stability of the building and its component parts during erection.
ii. It is solely the contractor's responsibility to provide any temporary shoring, bracing, guys, and tie downs that may be necessary to provide adequate vertical and lateral support. Such material is not shown on the drawings. Shoring and bracing shall remain in place until all permanent members are in place and all final connections are completed, including all roof and floor attachments.
iii. The building shall not be considered stable until all connections are complete.
iv. The engineer has no expertise in, and takes no responsibility for, construction means and methods or job site safety during construction. Approval of submittals made by the contractor which may contain information related to construction methods or safety issues, or participation in meetings where such issues might be discussed, shall not be construed as voluntary assumption by the engineer of any responsibility for safety procedures.
D. Equipment framing loads, openings, and structure in any way related to mechanical, plumbing, or electrical requirements are shown for bidding purposes only. The contractor shall coordinate this information with the involved trades before proceeding with such portion of the work. Excess cost related to variation in these requirements shall be borne by the appropriate contractor.
E. The contractor shall notify engineer of any variations in dimensions.
F. The engineer is not responsible for any deviations from these plans unless such changes are authorized in writing by the engineer.

4. Special Inspections

A. Special inspections, as required by Section 1705 of the IBC, shall be provided by an independent agency employed by the owner unless solved by the building official. The contractor shall coordinate and cooperate with the required inspections. Items requiring special inspection are:
i. Steel Construction (AISC 360-10 Chapter N)
a. Field welding (if any is used).
b. High-strength bolts (if any are used).
ii. Concrete Construction (IBC 1705.3)
a. Special inspections of concrete footings, grade beams, walls, and slabs are not required as per Exceptions 1, 2,3, 3, 4, & 5 to IBC Section 1705.3. Third party special inspection of reinforcing placement need only be performed where specifically required by the building official.
b. Special inspection of anchor rods/bolts is required per IBC Table 1705.3. Special inspection may be waived subject to the approval of the building official.
c. Special inspection of rebar welding is required (if any is used).
B. Special inspector must be qualified and approved by local building department.

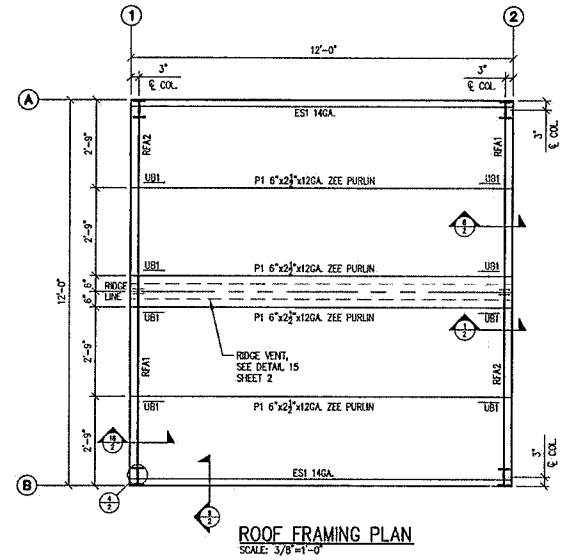

ROOF FRAMING PLAN
SCALE: 3/8"=1'-0"

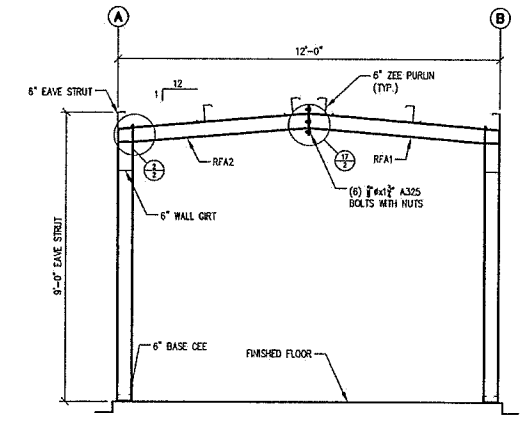

BUILDING SECTION AT LINE 1
SCALE: 3/8"=1'-0"
(LINE 2 SIMILAR)

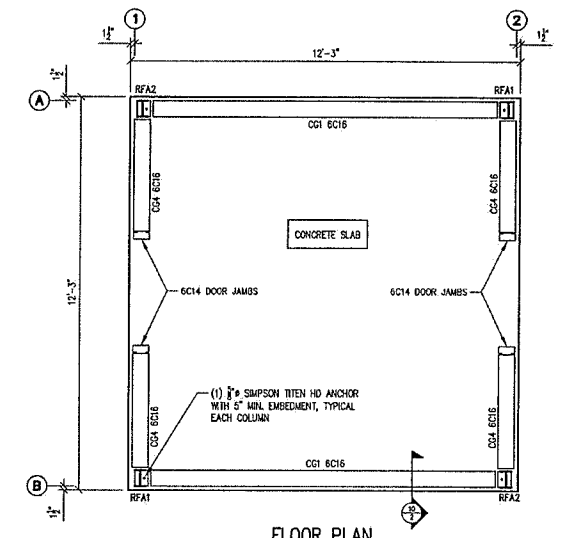

FLOOR PLAN
SCALE: 3/8"=1'-0"

PAINT COLOR FOR ROOF, WALLS AND TRIMS WILL BE MBCI SADDLE TAN.

NOTE: FRAME ASSEMBLIES LABELED RFA1 AND RFA2 ARE FABRICATED USING W6x9.

NOTES:
1: GRID LINES ARE AT STEEL LINE.
2: OUTSIDE OF CONCRETE IS 1½" OUT FROM STEEL LINE.

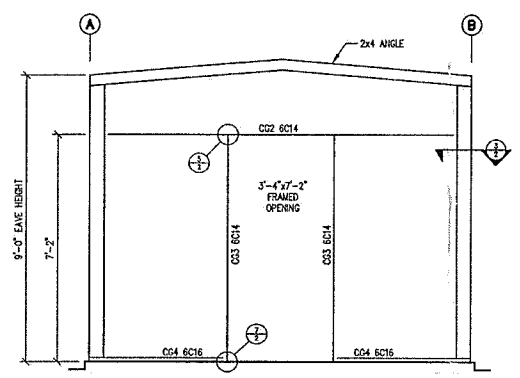

FRAMING AT LINES 1 AND 2
SCALE: 3/8"=1'-0"

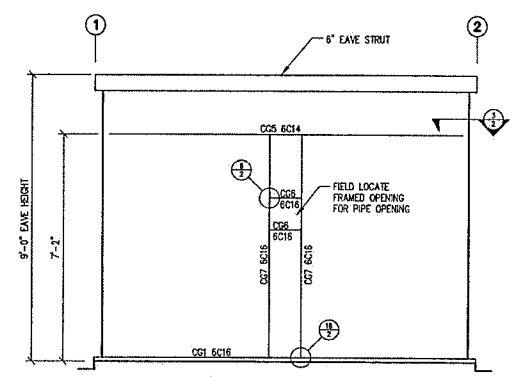

FRAMING AT LINE A AND B
SCALE: 3/8"=1'-0"

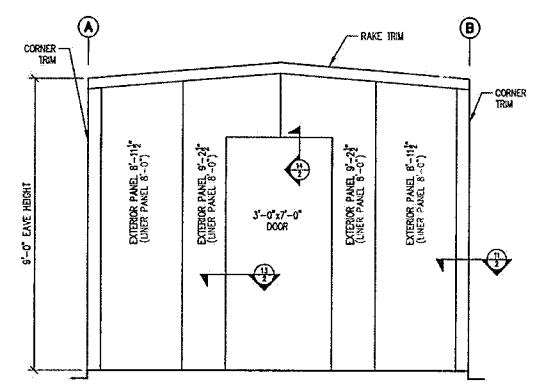

SHEETING AT LINES 1 AND 2
SCALE: 3/8"=1'-0"

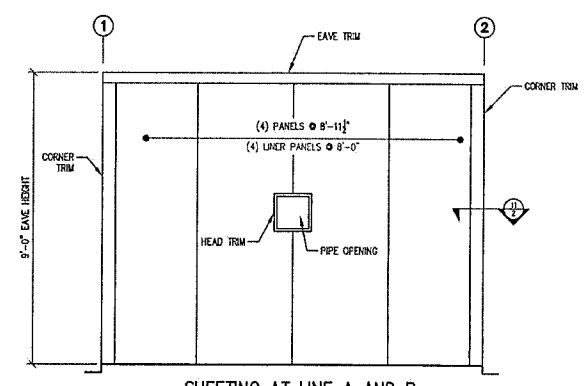

SHEETING AT LINE A AND B
SCALE: 3/8"=1'-0"

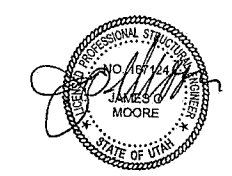

OCT 19 2016

Construction
3064 South Hunter Canyon DR
West Valley City, UT 84128
801-567-9661

Design by:
MOUNTAIN VIEW ENGINEERING, INC.
345 No. Main St., Suite A
Brigham City, Utah 84302
Phone (435) 734-9700
Fax (435) 734-9519
MVE JOB NUMBER: 150747

REFERENCE DRAWINGS		
DRAWING NUMBER	REV	DRAWING DESCRIPTION

WORK ORDERS	
WO NUMBER	DESCRIPTION

REVISIONS				
NO	DESCRIPTION	DATE	BY	CHECK
0	ISSUED FOR CONSTRUCTION	8-10-16	J.J.	J.J.
1	UPDATED TO 2015 IBC	10-19-16	K.S.	K.S.

ENGINEERING RECORD
DRAWN BY: J.J.
CHECKED BY:
PROJECT ENGINEER: J.O. MOORE
SURVEYOR:
ENGINEERING MNGR:
CONSTR MNGR:
APVD FOR CONSTR: 8-10-16

QUESTAR Gas

ROW NUMBER:
SECTION: T R
ELEVATION:
LAT: LONG:
SCALE: 3/8"=1'-0"

LINE NUMBER:
FACILITY:
TITLE: STANDARD DRAWING QUESTAR 12' x 12' BUILDING NOTES, PLANS, ELEVATIONS, AND SECTION
DESCRIPTION:
ADDRESS:

CITY	COUNTY	STATE

DRAWING NUMBER	SHEET	REVISION
QGC-V-BLD-CCS-010	1 OF 3	1

THE INFORMATION AND CONCEPTS CONTAINED IN THIS DOCUMENT ARE CONFIDENTIAL AND THE PROPERTY OF QUESTAR AND/OR THE CLIENT IDENTIFIED. DUPLICATION OR USE OF THIS INFORMATION AND/OR CONSTRUCTION OF SYSTEMS BASED ON THIS DOCUMENT ARE STRICTLY PROHIBITED WITHOUT WRITTEN AUTHORIZATION FROM QUESTAR.

QUESTAR_ANSI_D

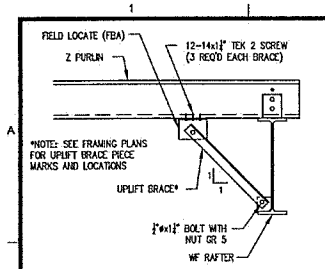

1 UPLIFT BRACE TO Z PURLIN
N.T.S.

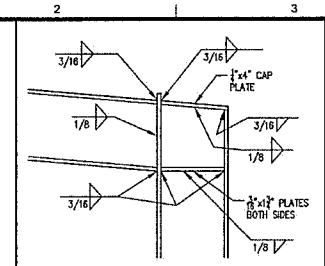

2 RAFTER TO COLUMN CONNECTION
N.T.S.

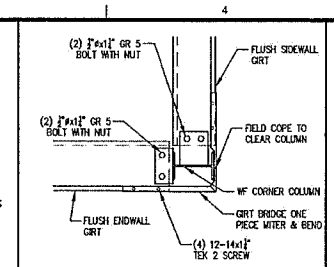

3 CORNER COLUMN DETAIL
N.T.S.

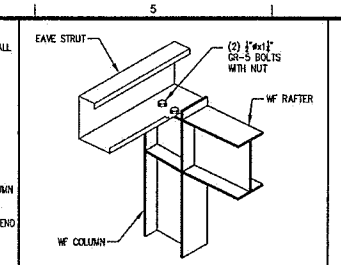

4 EAVE STRUT TO ENDWALL COLUMN
N.T.S.

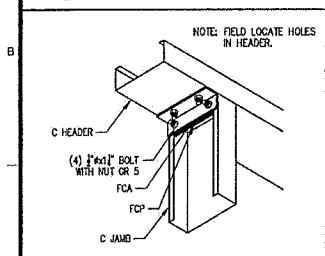

5 JAMB TO HEADER CONNECTION
N.T.S.

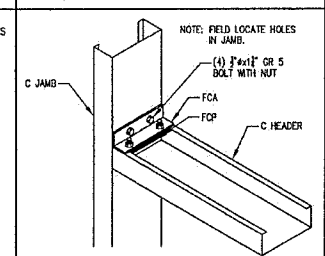

6 HEADER TO JAMB CONNECTION
N.T.S.

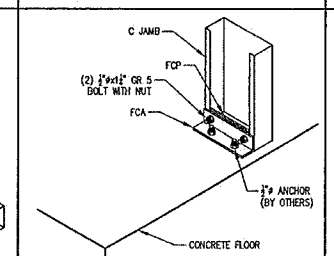

7 JAMB TO FLOOR
N.T.S.

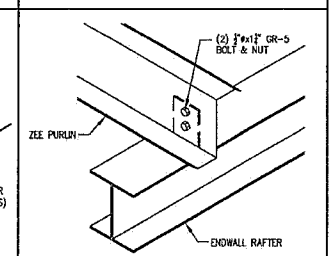

8 Z PURLIN TO RAFTER
N.T.S.

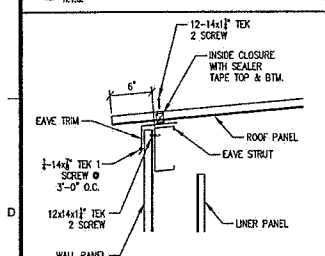

9 EAVE DETAIL
N.T.S.

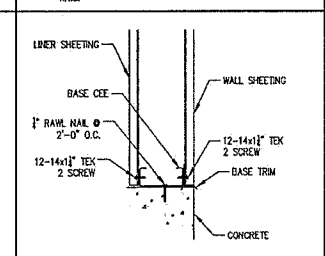

10 BASE DETAIL
N.T.S.

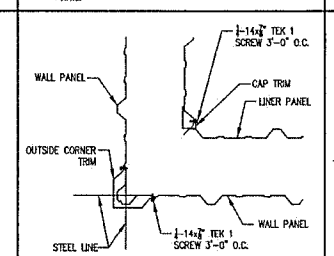

11 CORNER TRIM DETAIL
N.T.S.

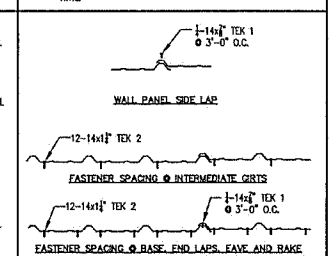

12 WALL PANEL FASTENER SPACING
N.T.S.

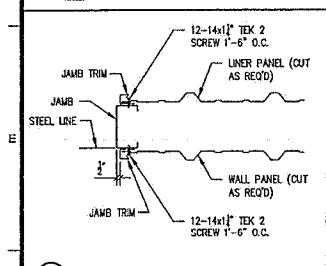

13 JAMB TRIM DETAIL
N.T.S.

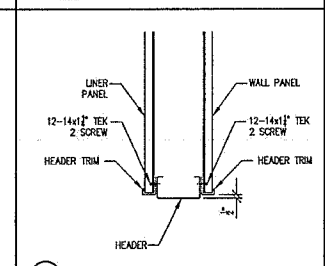

14 HEADER DETAIL
N.T.S.

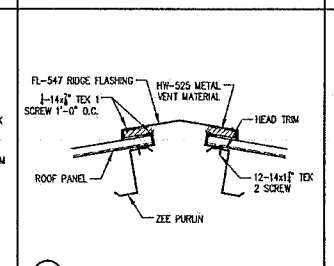

15 RIDGE VENT DETAIL
N.T.S.

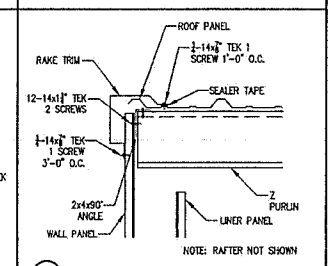

16 RAKE DETAIL
N.T.S.

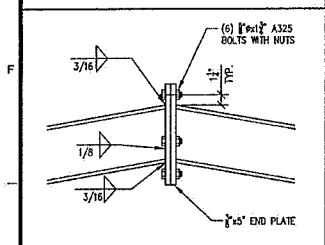

17 RIGID FRAME CONNECTION
N.T.S.

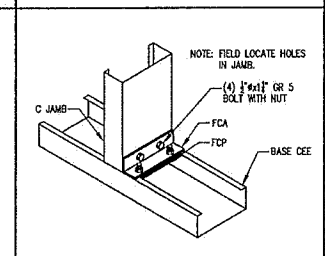

18 HEADER TO JAMB CONNECTION
N.T.S.

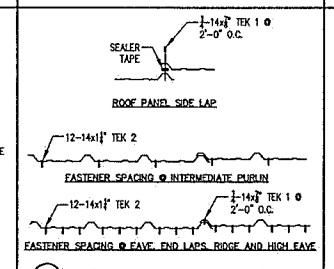

19 ROOF PANEL FASTENER SPACING
N.T.S.

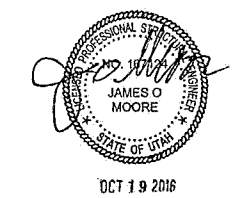

OCT 19 2016

Construction
3064 South Hunter Canyon DR
West Valley City, UT 84128
801-567-9661

Design by:
MOUNTAIN VIEW ENGINEERING, INC.
345 No. Main St., Suite A
Brigham City, Utah 84302
Phone (435) 734-9700
Fax (435) 734-9519
MVE JOB NUMBER: 150747

REFERENCE DRAWINGS		
DRAWING NUMBER	REV	DRAWING DESCRIPTION

WORK ORDERS	
WO NUMBER	DESCRIPTION

REVISIONS				
NO	DESCRIPTION	DATE	BY	CHECK
0	ISSUED FOR CONSTRUCTION	8-10-16	J.J.	J.J.
1	UPDATED TO 2015 IBC	10-19-16	K.S.	K.S.

ENGINEERING RECORD
DRAWN BY: J.J.
CHECKED BY:
PROJECT ENGINEER: J.O. MOORE
SURVEYOR:
ENGINEERING MNGR:
CONSTR MNGR:
APVD FOR CONSTR: 8-10-16

QUESTAR Gas

ROW NUMBER:
SECTION: T R
ELEVATION:
LAT: LONG:
SCALE: 3/8"=1'-0"

LINE NUMBER:
FACILITY:
TITLE: STANDARD DRAWING QUESTAR 12' x 12' BUILDING ERECTION DETAILS
DESCRIPTION:
ADDRESS:

CITY	COUNTY	STATE

DRAWING NUMBER	SHEET	REVISION
QGC-V-BLD-CCS-010	2 OF 3	1

THE INFORMATION AND CONCEPTS CONTAINED IN THIS DOCUMENT ARE CONFIDENTIAL AND THE PROPERTY OF QUESTAR AND/OR THE CLIENT IDENTIFIED. DUPLICATION OR USE OF THIS INFORMATION AND/OR CONSTRUCTION OF SYSTEMS BASED ON THIS DOCUMENT ARE STRICTLY PROHIBITED WITHOUT WRITTEN AUTHORIZATION FROM QUESTAR.

QUESTAR_ANSI_D

FOUNDATION NOTES

1. Earthwork

A. Foundation Design Values (assumed)
   i. Allowable Soil Bearing Pressure – 1500 psf
   ii. Coefficient of Friction – 0.25
   iii. Passive Earth Pressure – 150 psf/ft of depth

B. The building pad area shall be stripped of all frozen soil, debris, vegetation, and topsoil. All fill soils and any remaining loose natural soils shall be excavated to expose suitable natural soils.

C. Proof roll the entire building pad area to locate and remove all soft spots. Replace with compacted structural fill.

D. Place all footings and slabs on undisturbed natural soil or on properly compacted structural fill. Contractor shall verify that soil under footings is suitable to support footings.

E. Structural Fill: Structural fill should consist of well-graded sandy gravels with a maximum particle size of 3 inches and 5 to 15 percent fines (materials passing the No. 200 sieve). The liquid limit of fines should not exceed 35 and the plasticity index should be below 15. All fill soils should be free from topsoils, highly organic material, frozen soil, and other deleterious materials. Structural fill should be placed in maximum 8-inch thick loose lifts at a moisture content within 2 percent of optimum and compacted to at least 95 percent of modified proctor density (ASTM D1557) under the building and 95 percent under concrete flatwork.

F. It is the responsibility of the contractor to ensure that the depth of the bottom of the foundation is far enough below the adjacent grade to ensure adequate frost protection.

2. Concrete and Reinforcement

A. Material Standards
   i. Concrete
      a. Footings and foundation walls – f'c = 3000** p.s.i.
      b. Slabs on grade – f'c = 3500 p.s.i.
      ** Concrete has been designed using f'c = 2500 p.s.i. Special Inspection not required unless noted otherwise, see Special Inspection Notes.
      c. Normal weight aggregates – ASTM C33
   ii. Cement
      a. Use Type I/II cement as per ASTM C150
      b. Air-entraining admixtures (where required) – ASTM C260
      c. Calcium chloride shall not be used.
   iii. Reinforcing
      a. Rebar – ASTM A615 Grade 60 (Fy = 60 ksi)
      b. Welded wire – ASTM A1064
      c. Epoxy – Simpson SET-XP (ICC-ES ESR-2508) or HILTI HIT-RE 500-SD (ICC-ES ESR-2322)
   iv. Anchor Rods/Bolts
      a. $\frac{5}{8}$"ø Simpson Titen HD 5" min. embedment.

B. Detail reinforcing to comply with ACI 315 "Manual of Standard Practice for Detailing Reinforcing Concrete Structures" and the Concrete Reinforcing Steel Institute (CRSI) recommendations.

C. Minimum clear concrete cover for reinforcement shall be as follows unless noted otherwise:
   a. Concrete cast directly against and permanently exposed to earth – 3"
   b. Concrete exposed to weather or earth:
      1. #5 bars or smaller – $1\frac{1}{2}$"
      2. #6 bars or larger – 2"
   c. Concrete not exposed to weather or in contact with the ground – $\frac{3}{4}$"
   d. Slabs on grade – as shown in details, $\frac{3}{4}$" min. from top of slabs not exposed to weather

D. Lap Splice Lengths (unless noted otherwise)
   a. f'c = 2500-3500 p.s.i.
      1. #6 and smaller – 36 bar diameters
      2. #7 and larger – 45 bar diameters
   b. f'c = 4000 p.s.i. or greater
      1. #6 and smaller – 29 bar diameters
      2. #7 and larger – 36 bar diameters
   c. Lap splice lengths may be decreased by 25% for slabs on grade and horizontal wall reinforcing.
   d. Increase lap splice lengths by 50% where epoxy coated bars are used.

E. Stagger splices in walls so that no two adjacent bars are spliced in the same location, unless shown otherwise.

F. Make all bars continuous around corners or provide corner bars of equal size and spacing.

G. Vertical bars in walls, grade beams, and piers to terminate in footings with ACI standard hooks (12 bar diameters) to within 4" of the bottom of the footing unless noted otherwise.

H. Horizontal wall reinforcing shall terminate at the ends of walls with a 90 degree hook plus a 6 bar diameter extension, unless shown otherwise.

I. Horizontal wall reinforcing shall be continuous through construction and control joints.

J. Splices in horizontal reinforcement shall be staggered. Splices in two curtains (where used) shall not occur in the same location.

K. Use chairs or other support devices as required for proper clearance.

L. Unless noted otherwise, openings in walls shall be reinforced with #5 bar on all sides of the opening. Reinforcing shall extend 24" min. past the edge of the opening. For one layer of wall reinforcing provide (1) #5 bar around openings, for two layers provide (2) #5 bars.

C. Slabs and grade beams shall not have joints in a horizontal plane. All reinforcement shall be continuous through all construction joints.

D. Floor slab thickness and reinforcing shown in these drawings are adequate to support typical uniform loads only. Mountain View Engineering has not designed the slab for any specific concentrated forces such as those from vehicles, storage racks, or heavy equipment (unless noted otherwise).

E. Welding of rebar is not allowed unless specifically indicated in the drawings. All embedments, reinforcing, and dowels shall be securely tied to framework or to adjacent reinforcing prior to placement of the concrete. Tack welding of rebar joints in grade beams, walls, or cages is not allowed. Where welding of rebar is shown in the drawings, all rebar to be welded shall be ASTM A706 Grade 60.

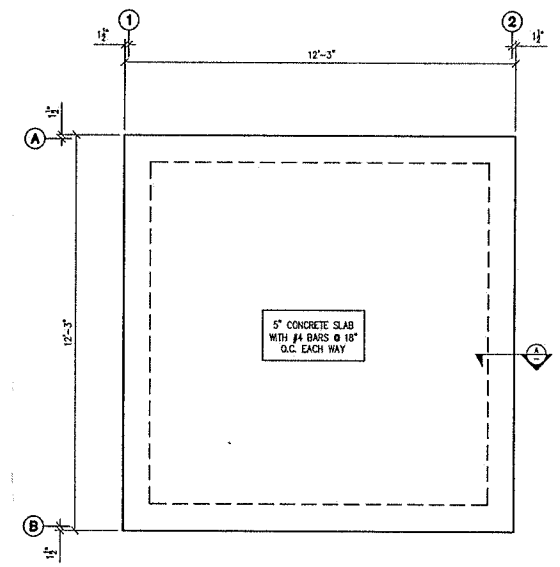

FOUNDATION PLAN
SCALE: 3/8"=1'-0"

FOUNDATION LOADS (AT EACH COLUMN) ASD
UP 640 lbs
DOWN 2550 lbs
SHEAR 510 lbs

NOTES:
1: GRID LINES ARE AT STEEL LINE.
2: OUTSIDE OF CONCRETE IS $1\frac{1}{2}$" OUT FROM STEEL LINE.

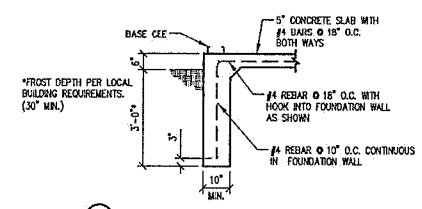

(A) THICKENED SLAB EDGE DETAIL
1/2"=1'-0"

Construction
3064 South Hunter Canyon DR
West Valley City, UT 84128
801-567-9661

OCT 19 2016

Design by:
MOUNTAIN VIEW ENGINEERING, INC.
345 No. Main St., Suite A
Brigham City, Utah 84302
Phone (435) 734-9700
Fax (435) 734-9519
MVE JOB NUMBER: 150747

REFERENCE DRAWINGS		
DRAWING NUMBER	REV	DRAWING DESCRIPTION

WORK ORDERS	
WO NUMBER	DESCRIPTION

REVISIONS				
NO	DESCRIPTION	DATE	BY	CHECK
0	ISSUED FOR CONSTRUCTION	8-10-16	J.J.	J.J.
1	UPDATED TO 2015 IBC	10-19-16	K.S.	K.S.

ENGINEERING RECORD
DRAWN BY: J.J.
CHECKED BY:
PROJECT ENGINEER: J.O. MOORE
SURVEYOR:
ENGINEERING MNGR:
CONSTR MNGR:
APVD FOR CONSTR: 8-10-18

QUESTAR Gas

ROW NUMBER:
SECTION: T R
ELEVATION:
LAT: LONG:
SCALE: 3/8"=1'-0"

LINE NUMBER:
FACILITY:
TITLE: STANDARD DRAWING
DESCRIPTION: QUESTAR 12' x 12' BUILDING
ADDRESS: FOUNDATION PLAN, NOTES, AND DETAILS

CITY	COUNTY	STATE

DRAWING NUMBER	SHEET	REVISION
QGC-V-BLD-CCS-010	3 OF 3	1

THE INFORMATION AND CONCEPTS CONTAINED IN THIS DOCUMENT ARE CONFIDENTIAL AND THE PROPERTY OF QUESTAR AND/OR THE CLIENT IDENTIFIED. DUPLICATION OR USE OF THIS INFORMATION AND/OR CONSTRUCTION OF SYSTEMS BASED ON THIS DOCUMENT ARE STRICTLY PROHIBITED WITHOUT WRITTEN AUTHORIZATION FROM QUESTAR.

QUESTAR_ANSI_D

Nibley City
455 West 3200 South
Nibley, UT 84321

To Whom It May Concern:

I, Elizabeth Bowen, Trustee of the Virginia S. Harris Inter Vivos Trust dated the 29th day of October, 1979, hereby appoint RICK HELLSTROM, Land Agent Consultant for Dominion Energy Utah as my agent in regards to the Dominion Energy Utah's (Dominion) application for a Conditional Use Permit (CUP) for its District Regulator Station Site located at approximately 75 West 3200 South, Nibley, Cache County, Utah.

Said application is for a 0.128 acre site in the southwest corner of Parcel 103-0260-0014. Dominion and The Virginia S. Harris Trust are currently preparing documents to relocate Dominion's existing Parcel #03-026-0015 to the location depicted in the CUP application.

By appointing an agent, I understand that he is authorized to make decisions regarding said development and will be the point of contact should issues/questions arise during the review period.

Dated the 16 day of Feb, 2021.

The Virginia S. Harris Inter Vivos Trust
dated the 29th day of October, 1979

BY: Elizabeth Bowen
Elizabeth Bowen, Trustee

19.12.010 Rural Estate Zone R-E

1. Purpose: The major purpose of the rural estate zone is to provide and protect residential development at a low density in a semi-rural or rural environment. It is also to provide for certain rural amenities such as the keeping of livestock or the raising of crops on larger than minimum lots, in conjunction with the primary residential nature of the zone.
2. Use Regulations: See NCC 19.20.
3. Space Requirements: See NCC 19.22.
4. Animal And Fowl Unit Regulations: See NCC 19.34.

19.12.020 Residential Zones R-1, R-1A, R-2

1. Purpose: The major purpose of the residential zones is to encourage, maintain and protect low density residential neighborhoods. Other uses which are compatible with and not detrimental to family-oriented residential neighborhoods may be allowed as a permitted use or as a conditional use.
2. Use Regulations: See NCC 19.20.
3. Space Requirements: See NCC 19.22.
4. Animal And Fowl Unit Regulations: See NCC 19.34.

19.12.030 Residential Zone R-2A

1. Zone Established: There is hereby created an R-2A zone.
2. Lot Size: Lots in subdivisions approved in areas zoned R-2A shall be a minimum of twelve thousand (12,000) square feet, but the average lot size for the entire subdivision phase and portion thereof shall average at least fourteen thousand (14,000) square feet. Storm water retention/detention areas shall be included in the calculation of average lot size.
3. Lot Frontage: Lot frontage of an approved subdivision shall be one hundred feet (100') as measured at the setback line.
4. Use Regulations: All other regulations, guidelines, or ordinances including, but not limited to, permitted uses, conditional uses, street and sidewalk construction and widths and setback lines shall be the same as and equal to those listed for the R-2 zone.

19.12.040 Mixed Residential Zone R-M

1. Purpose: The purpose of the Mixed Residential Zone is to provide a variety of housing types to accommodate the diverse housing preferences of the community's existing and future residents that are supported by an appropriate provision of services, open space and amenities.
2. Definitions
3. Use Regulations: See NCC 19.20. Allowed uses in this zone may be provided either separately of within the same building or lot as other allowed uses.
4. Space Requirements:

Commented [LR1]: We may want to call this a 'mixed use zone' if we decide to allow the range of commercial uses we are proposing.

Formatted: Font: (Default) Times New Roman, 12 pt

Commented [LR2]: I still need to draft use regulations.

	Single-Family Home	Multi-Family Housing
Minimum Lot Size (sq. ft.)	4,500	_
Maximum Height	40	50
Minimum Frontage	50'	_
Front Yard	20'	20'
Front Porches	10'	10'
Side Yard	5'	10'
Side Yard Porches, Deck, Overhangs	5'	5'
Side Yard Adjacent to Streets	20'	20'
Rear Yard	15'	15'
Maximum Height	40'	40'

Accessory-Use Setbacks	Single-Family Home	Multi-Family Housing
Front Yard	20'	20'
Side Yard	3'	3'
Side Yard Street	20'	20'
Rear Yard	1'	1'
Maximum Height	15'	15'

1. Setback and frontage requirements shall apply to each building, and not each dwelling unit.

5. Animal And Fowl Unit Regulations: See NCC 19.34.
6. R-M Application Map

Formatted Table

Commented [LR3]: Need to check with Fire Chief about this

Commented [LR4]: Most of these setbacks match our townhome standards. Logan's are slightly less restrictive.

Formatted Table

Formatted: Left, Outline numbered + Level: 1 + Numbering Style: 1, 2, 3, … + Start at: 1 + Alignment: Left + Aligned at: 0.5" + Tab after: 0.75" + Indent at: 0.75"

Formatted: Font: 11 pt, Font color: Custom Color(RGB(81,89,103))

An R-M Zone designation shall only be applied for in the following areas:

(NEED TO CREATE MAP)

7. Density Regulations
   A. The maximum density of a residential development within the R-M zone shall be 20 units per net developable acre.
   B. A proposed Multi-family housing development adjacent to existing single-family homes must place single family homes adjacent to the established single-family homes unless otherwise buffered by an arterial roadway or 300-foot width of open space including a landscaped Buffer as defined within this chapter.
   C. The City may approve single family homes that do not meet the required setbacks and lot size, i.e. patio homes. These homes shall be considered 'multi-family housing' and shall assume the associated open space requirements of such.
8. Open Space and Amenities
   A. Each residential development within an R-M zone shall provide the following types and amounts of open space and amenities:

	Min Op
Dwelling Type	**Percentage of Net Developable Acres Required to**
Single Family	20%
Multi Family or mix of Single Family and Multifamily	35%

1.

Minimum Amenity							
Number of Units	Park Area	Public Restroom	Pavilion	Swing Set	Playground	Clubhouse, Pool, or Splashpad	Court/Fields
Less Than 100	1.5 Acres	_	_	_	1	_	
100-150	2.5 Acres	_	_	1	1	_	

Commented [LR5]: Need to discuss which areas should be eligible

Formatted: Indent: Left: 0.5", No bullets or

Formatted: Font: (Default) Times New Roman, 12 pt

Commented [LR6]: This is effectively lower than Logan's which calculates the density based upon overall acreage. The Strata apartments are developed at 20 acres/gross acre.

Formatted: Outline numbered + Level: 2 + Numbering Style: A, B, C, … + Start at: 1 + Alignment: Left + Aligned at: 0.75" + Indent at: 1"

Formatted: Font: (Default) Times New Roman, 12 pt

Commented [LR7]: This is almost verbatim what we require for R-PUDs

Formatted: Font: (Default) Times New Roman, Font color: Custom Color(RGB(81,89,103))

Formatted: List Paragraph, Outline numbered + Level: 2 + Numbering Style: A, B, C, … + Start at: 1 + Alignment: Left + Aligned at: 0.75" + Indent at: 1"

Formatted: Font: (Default) Times New Roman, Font color: Custom Color(RGB(81,89,103))

Formatted: Font: (Default) Times New Roman, Font color: Custom Color(RGB(81,89,103))

Formatted: List Paragraph, Outline numbered + Level: 3 + Numbering Style: 1, 2, 3, … + Start at: 1 + Alignment: Left + Aligned at: 1.25" + Tab after: 1.5" + Indent at: 1.5"

Formatted Table

151-200	3.5 Acres	_	_	1	2	_	
201-250	4.5 Acres	1	1	1	2	_	
251-300	5.5 Acres	1	1	1	2	1 of the above options	
301-400	6.5 Acres	1	2	2	3	2 of the above options (At least one pool or Splashpad)	
401-500	7.5 Acres	2	2	2	3	2 of the above options (At least one pool or Splashpad)	
501+	*	*	*	*	*	*	

Formatted: Font: (Default) Times New Roman, Font color: Custom Color(RGB(81,89,103))

Formatted: No bullets or numbering

Formatted: Outline numbered + Level: 3 + Numbering Style: 1, 2, 3, … + Start at: 1 + Alignment: Left + Aligned at: 1.25" + Tab after: 1.5" + Indent at: 1.5"

2. This chart does not include all potential amenities. The applicant may apply for other amenities that would benefit the development and are in support of Nibley City's Parks and Recreation goals. Any proposed amenities not listed, must be approved by the City Council. The City Council may also allow a substitution of amenities on the table above. These substitutions may only be approved if the cost, value and use of the amenity matches or is greater than the required amenity. The burden shall be on the developer to provide justification and is subject to review and acceptance by staff prior to Council consideration. An applicant may include additional amenities beyond the requirements of this section.
3. Development over 500 units must supply adequate and proportional amenities based on the table above.
4. Development may be phased according to NCC 21.02.080 and the Development Agreement. The City Council may extend phasing deadlines within the development agreement based on the size of the project and proposed amenities. Public, Common or Owners' Association-owned amenities shall be fully developed and operational in conjunction with each phase of the subdivision as a percentage of the total developed value of the subdivision (for example, if 25% of the dollar value of the development is being constructed, then a minimum of 25% of the dollar value of the built-out amenities must be developed). The determination of value, construction sequencing, and acceptance criteria shall be specified in the Development Agreement. An applicant may also provide an escrow or bond for improvements according to Nibley City Standards. Until improvements are accepted by the City for the attendant phase, no permits shall be issued for subsequent phases.

5. All amenities designed and designated to be transferred to City ownership and maintenance must meet Nibley City Design Standards. The City must review and approve any improvements that will be owned and maintained by the City as part of the construction drawing review.
6. Public and Private Park space may be combined or spread throughout the development. Each Park shall be a minimum of .25 acres. Each dwelling unit shall be within a quarter mile of a park within the development, unless otherwise approved by the City Council. Parks may be public or private. Each public park development and placement within an R-M development shall be agreed upon by the applicant and the City Council. Park space may not include alleyways, back yards, gangways, front yards, forecourts, private patios, porches, driveways, etc.; unless proper amenities and access are provided.
7. All amenities shall meet any federal, state, city, or other standards that apply.
8. Sports Courts/Fields: include a facility/amenity that is built for one of the following: Tennis Court, Pickleball Court, Basketball Courts, Soccer field, Volleyball pit, Baseball field, Softball field, wallball, golf course, disc golf course, or others as approved by the City Council.
9. Picnic Area: Two or more picnic tables for use by 10 or more persons.
10. Pavilion: A covered picnic area. Each Pavilion must be designed for use of a minimum ten or more people.
11. Club House: A building available to community members to house a club or social organization not conducted for private profit. Club Houses shall be owned and maintained by a homeowner's association. A club house shall be at least 1000 sq. ft. in size.
12. Playground: an area provided for children to play on. Each Playground must be designed for children twelve and younger. A playground must include features to appeal to children within the above age group including some of the following: slides, monkey bars, ladders, tunnels, climbers, bridges, ramps, platforms, etc. All playground equipment must be of commercial grade. Each playground must include a minimum of 8 features.
13. Pool: A recreation facility designed and intended for water contact activities. No pool shall be less than 800 sq. ft.
14. Public Restroom: a room or small building with toilets and sinks that is available for use by the general public. One (1) public restroom shall contain at minimum 2 individual rooms with toilets and sinks (male/female or unisex). Larger restroom facilities may be required depending on the amount of activity projected at a particular open space/park area. All restroom facilities shall be built in compliance with the Americans with Disabilities Act (ADA).
15. Splashpad: A recreation facility with sprinklers, fountains, nozzles and other devices or structures that spray water. Splashpads shall contain some above ground features.

B. Maintenance of Amenities

1. All R-M developments must establish and maintain in perpetuity by the property owner or an Owners Association if there are open space and amenity under common ownership, or as otherwise required by federal, state or Nibley City law. The Developer shall be a member of said Owners Association while the subdivision is being developed.
2. Costs: Unless otherwise agreed to by the City, the cost and responsibility of maintaining amenities shall be borne by the fee owner of the property or Owners Association.

Formatted: Font: (Default) Times New Roman, Font color: Custom Color(RGB(81,89,103))

Formatted: List Paragraph, Outline numbered + Level: 2 + Numbering Style: A, B, C, … + Start at: 1 + Alignment: Left + Aligned at: 0.75" + Indent at: 1"

Formatted: Outline numbered + Level: 3 + Numbering Style: 1, 2, 3, … + Start at: 1 + Alignment: Left + Aligned at: 1.25" + Tab after: 1.5" + Indent at: 1.5"

3. Preliminary Maintenance Plan: A Preliminary Maintenance Plan shall be submitted with the preliminary plat or concept site plan for proposed maintenance of amenities within the development. This plan shall outline the following:
    1. The proposed ownership and responsibility for maintenance of the amenities;
    2. The proposed use of the amenities' and how each parcel of amenities meets the standards listed in this Chapter;
    3. The size of each amenities parcel; and
    4. The proposed concept plan for landscaping of the amenities.
4. Final Maintenance Plan: The developer shall submit a plan outlining maintenance and operations of the amenities and providing for and addressing the means for the permanent maintenance of the amenities within the proposed R-M application for the subdivision or development. The developer shall provide a final maintenance plan with the final plat or site plan and the plan shall contain the following:
    1. Documents and plans as listed in for the Preliminary Maintenance Plan.
    2. A description of the use of the amenities and how that use complies with this Chapter;
    3. The establishment of necessary regular and periodic operation and maintenance responsibilities for the various kinds of amenities (e.g., lawns, playing fields, meadow, pasture, wetlands, stream corridors, hillsides, clubhouse, pool, woodlands, etc.);
    4. The estimated staffing needs, insurance requirements, and associated costs.
    5. The landscaping plans for parcels that will be owned by an Owners Association or by the City.
5. Approval: The Final Maintenance Plan must be approved by the City Council prior to or concurrent with final plat approval for the subdivision. The Final Maintenance Plan shall be recorded against the property within the subdivision before any property or lots are sold or transferred and shall include provisions for the City's corrective action rights as set forth herein. Any changes or amendments to the Final Maintenance Plan must be approved by the City Council.
6. The developer shall offer an approved letter of credit, bond or escrow for all proposed improvements as set forth in NCC 21.14.
7. Failure to Maintain: The City may assume responsibility for the maintenance and operation of any portion of any amenity or common facility within an R-M development in the event the party responsible for maintaining or operating the amenity fails to do so in accordance with the terms of this Ordinance, the approved Maintenance Agreement, any Conditional Use Permits, Business Licenses or any other agreements between the City and the developer, owners, or other parties responsible for maintaining or operating amenities. If the City assumes responsibility under this paragraph, any remaining development escrow or bond funds may be forfeited, costs, fees, and liens for maintenance costs shall be assessed as described herein, and any permits, licenses or operating agreements may be revoked or suspended by the City in the City's sole discretion. Owners shall not impede the City in its efforts to maintain the amenities.
8. Corrective Action: The City may enter onto any amenity provided as part of an R-M development and take such corrective action, including extended maintenance, repairs, modifications, or the execution of additional agreements, as

Formatted: Outline numbered + Level: 4 + Numbering Style: 1, 2, 3, … + Start at: 1 + Alignment: Left + Aligned at: 1.75" + Tab after: 2" + Indent at: 2"

Formatted: Outline numbered + Level: 3 + Numbering Style: 1, 2, 3, … + Start at: 1 + Alignment: Left + Aligned at: 1.25" + Tab after: 1.5" + Indent at: 1.5"

Formatted: Outline numbered + Level: 4 + Numbering Style: 1, 2, 3, … + Start at: 1 + Alignment: Left + Aligned at: 1.75" + Tab after: 2" + Indent at: 2"

Formatted: Outline numbered + Level: 3 + Numbering Style: 1, 2, 3, … + Start at: 1 + Alignment: Left + Aligned at: 1.25" + Tab after: 1.5" + Indent at: 1.5"

the City determines is necessary for the amenity to satisfy the terms of this Ordinance, the approved Maintenance Agreement, any Conditional Use Permits, Business Licenses or any other agreements between the City and the developer, owners, or other parties responsible for maintaining or operating amenities. The costs of such corrective action shall be charged to the owners and may include administrative costs, legal costs, and penalties. Such costs shall become a lien on said properties. Notice of such lien shall be filed by the City in the county recorder's office. The maintenance plan and all other documents creating or establishing any Association or conservation organization for the property shall reference the City's corrective action authority set forth herein and shall be recorded against the property before any property or lots are sold or transferred.

9. Implementation and Maintenance: The developer of the subdivision shall fund implementation and maintenance of the amenities until such time as the control of the amenity is transferred to the owner listed in the maintenance plan. The developer shall address the implementation, development, maintenance and transfer procedures in the sensitive area designation plan map or master development plan, as applicable.
10. Maintenance Access: The developer of the subdivision shall provide sufficient maintenance access from a dedicated right-of-way to all amenities and constrained and sensitive lands within the R-M DEVELOPMENT to allow the owner of the property to have sufficient access.

Multifamily Housing Architectural Design Standards

1. General Design Concepts. New development shall be designed for its specific context within Nibley City. Developments shall possess a similar design theme, and the site shall be designed such that the overall development is cohesive. Building architecture, exterior materials, and colors shall coordinate.
2. All facades shall include architectural treatments to provide visual interest and to differentiate individual units. These design standards shall be applicable to all sides of a building, with each façade (front, rear, and side) being required to meet the terms of this Section.
3. Building Materials. The majority of each façade (51% or more of the wall area excluding windows and doors) shall be constructed of the following hard surface building materials: brick, stone, stucco, treated or split face decorative block (CMU), fiber cement siding, concrete, composite siding, or other durable building material as approved by the City Council. EIFS or untreated concrete block (CMU) may be allowed as an accent or secondary material only. The Planning Commission may approve metal as an exterior building material and as a primary material on a case-by-case basis if an applicant can show that the type of metal is of a high grade and provides architectural quality to a building.
4. Vertical Separation. Buildings in excess of one (1) story in height shall exhibit architectural detailing that establishes a vertical separation between lower and upper stories. This may be accomplished by a mid-façade cornice or trim, a change in material, style or color, a façade step-back or roof pitch with dormer windows, or other methods
5. Building Entrances. Building entrances shall have porches and shall be oriented toward the street or an open space area and provide connecting pedestrian access between the street, parking or open space areas.
6. Variation. Multi-family housing shall be designed with architectural wall variations spaced at intervals of thirty (30) to fifty (50) feet in linear width, depending on the size of the building. The following architectural features shall be incorporated into the design of the building:
    1. Change in building materials;

2. Building projections measuring at least twelve(12) inches in depth based on the scale of the proposed building;
3. Awnings and lighting, or another architectural variation as approved on a case-by- case basis that creates visual interest.

7. Garages. Multi-family housing shall be designed oriented toward exterior public roads with rear loading garages or parking accessed by a paved parking area or alleyway, except along Highway 165 and 89/91, as approved. Rear loading garages are highly encouraged for buildings located on interior project roads with units oriented toward a road or common courtyard area. Front loading garages may be allowed for buildings that do not have any portion of the building adjacent to a current or planned public road or street outside of the development.

Formatted: Space Before: Auto, After: Auto, Outline numbered + Level: 1 + Numbering Style: 1, 2, 3, … + Start at: 1 + Alignment: Left + Aligned at: 0.25" + Tab after: 0.5" + Indent at: 0.5", Pattern: Clear (White)

Formatted: Pattern: Clear

Site Design Standards.

5. Natural features. R-M developments shall respect and maintain natural features such as existing trees, hills, drainages, wetlands, bodies of water, or other natural features.
6. A landscaping plan for the front yards shall be included. The landscaping plan shall include at least one (1) tree for every dwelling unit, and two (2) shrub of five (1) gallon size for each dwelling units. Coniferous trees shall be at least six (6) feet in height and the deciduous trees shall be at least one and a half (1.5) inches in caliper.
7. Connectivity. R-M developments shall provide connectivity with the surrounding area and throughout the development. All improvements shall consider vehicle, bicycle, and pedestrian access.
   A. Street Design: All street designs shall comply with the General Plan and Transportation Master Plan including Nibley City's street standards and connectivity requirements. Each development shall provide at least two working access points that provide access to an existing street right-of-way. Additional access points may be required in order to facilitate an adequate and convenient circulation system within the City. Such additional access points will be located where they will implement the City's Transportation Master Plan, connect to existing street rights of way, or provide access for the logical development of adjacent, undeveloped properties.
   B. All streets are encouraged to incorporate traffic calming and beautification methods as listed in Nibley City design standards and Transportation Master Plan. This included islands, bulb-outs, roundabouts, etc. Each traffic calming measure shall be approved by the City Engineer.
   C. All Streets shall be dedicated public streets built to Nibley City Code and standards. Private drives shall only be built to access parking courts or garages that are located directly behind each unit.
   D. Private Drives/Alleyways provide vehicular access to parking and dwelling units but do not provide primary pedestrian access to units. Private Drives are intended to be used primarily for vehicular circulation and dwelling access and should be visually distinct from streets.
      1. Private drives shall be a minimum width of 20 ft.
      2. All private drives shall be perpendicular, within 10 degrees, to the street they connect to.
      3. Driveways that access a single dwelling unit are not considered private drives or an alleyway
   E. Developments shall provide a pedestrian access to the development border at intervals at a minimum of 660 feet unless expressly prohibited by conflicting with previously developed subdivisions or land use as determined by the land use authority. These access points shall be aligned with other trail systems, street right-of-way, or amenities and shall

match the layout and size of the connection. A connection shall contain a minimum of eight ft (8') trail or sidewalks on public streets that meet Nibley City standards.

F. No dwelling units in an R-M development shall have driveway access to any arterial roadway as listed in Nibley's Transportation Master Plan. Townhome units may face and have frontage along arterial roadways but must have rear loading garages. Public and private parks, open space or Buffering as defined within this chapter may also be along arterial roads.

8. Pedestrian circulation. R-M development shall provide a circulation map and show the following improvements to for pedestrian circulation and safety:
   A. Pedestrian walkways that interconnect the adjacent street(s), amenities, parking areas, building entries, adjacent sites and adjacent master planned trails where applicable. Each building located along a public road must provide a sidewalk connection from the building entrance to the public sidewalk.
   B. Walkways shall be hard surfaced with concrete.
   C. Crosswalks shall be placed where pedestrian walkways cross streets and internal roads and shall be painted or made of concrete.
   D. The development shall provide connections to the Nibley City trail system. These trails must be dedicated to the City and built to Nibley City standards as listed in the Trails Master Plan and Nibley City Design Standards.
9. Parking: Multi-family housing shall provide 2 primary parking spaces for each unit. Primary parking must be contained in a garage, carports, driveway, or parking court. An R-M development shall provide one guest parking spot for every three units. Guest parking may be provided in parking courts maintained by the property owner or owner association.
   A. Individual parking courts shall contain no more than 20 parking spaces and shall be physically and visually separated by a landscape area a minimum of 10 feet in width from any adjacent right-of-way. The separation shall be landscaped with grass, trees, or xeriscape plants.

Commented [LR8]: Is this too restrictive for multifamily parking?

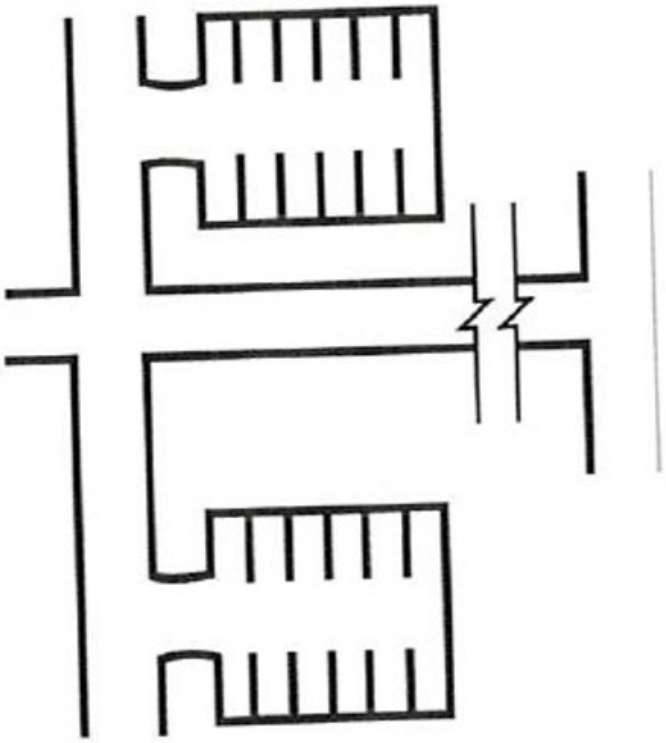

B. A parking court of any length shall consist of no more than one double-loaded parking aisle.
C. Parking courts shall be located in the interior of the development and located between or in the rear of buildings for townhome developments.
D. Parking Courts shall be paved and built to Nibley City parking lot standards.

10. Landscaping: All portions of the lot not improved with structures or other impervious surfaces shall be maintained with suitable landscaping of plants, trees, shrubs, grasses, or similar landscaping materials.
    A. Landscaping shall also be installed in all park strips to the same standards as other onsite landscaping. Asphalt, concrete, bricks, pavers, railroad ties, and other nonvegetative material are not allowed in the park strip area between the curb and sidewalk. Xeriscaping is permitted. The developer should plant street trees of an approved species and size along all street. Trees should be planted at intervals of every 50 feet and must meet Nibley City Standards.
    B. Buffering: R-M developments shall provide buffering along Highway 89/91 or Highway 165, or along the boundary of an R-M development that is adjacent to commercial, or industrial zones. Buffering landscaping is not required if commercial or industrial zones are separated by a public street from the R-M development. Buffering shall meet the standards within this ordinance.

C. Natural Landscape: All open space land dedicated to natural use must maintain its natural landscaping and plant life.

11. Fences:

A. Permitted Fences: Dwelling units are allowed to install and construct fences in compliance with NCC 19.24.090. Vinyl fences are only permitted in an R-M development for the purpose to mark property lines of individual dwelling units.

B. Fencing to mark the boundary of the development or amenities must meet the following standards:

1. Opaque fences or walls must only be 4 feet tall. Any fencing above 4 feet must be at a minimum 80% transparent.
2. Fencing and walls must be constructed out of concrete, bricks, rock, or metal bars. Chain link fences are prohibited and vinyl fences are prohibited unless used to mark the property boundary of the dwelling unit. Wood may only be used in a rail or agricultural-type fencing. Other materials may be approved by the Planning Commission based on the longevity of the material and if the material will aesthetically enhance the property. Walls and fencing shall also comply with NCC 19.24.090 and other fencing setback requirements as contained within Nibley City Code.

Approval Process

Subdivisions within the R-M zone must complete the approval process of NCC 21.06 to ensure compliance with this section. All multifamily development that does not require a subdivision must complete the Site Plan Review Process of NCC 19.14.050.

Formatted: Font: (Default) Times New Roman, Font color: Custom Color(RGB(81,89,103))

19.20.020 Land Use Chart

Nibley City Land Use Chart

Key

P:	Permitted Use
NP:	Not Permitted Use
C:	Conditional use
A:	Agriculture Zone
R-E:	Rural Estate Zone
R-1:	Residential Zone R-1
R-1A:	Residential Zone R-1A

R-2:	Residential Zone R-2
R-2A:	Residential Zone R-2A
P/S:	Park/School
C:	Commercial Zone
C-N:	Neighborhood Commercial Zone
I:	Industrial Zone

Use	**A**	**R-E**	**R-1**	**R-1A**	**R-2**	**R-2A**	~~**R-M**~~				
Residential											
Assisted Living Facility	C	C	NP	NP	NP	NP	~~P~~				
Artisan Shop	C	C	C	C	C	C	C	NP	C	C	C
Bed and Breakfast Inn	C	C	C	C	NP	NP	P	NP	C	C	NP
Building moved from another site	C	C	C	C	C	C	C	C	C	C	C
Group Living Facility [1]	C	C	C	C	C	C	C	NP	NP	NP	NP
Home Occupation	C	C	C	C	C	C	C	NP	NP	NP	NP
Home Office	P	P	P	P	P	P	P	NP	NP	NP	NP
Housing, Short-Term Rental	C	C	C	C	C	C	C	NP	NP	NP	NP
Housing, Single-Family	P	P	P	P	P	P	P	NP	C	C	C
Housing, Two-Family	P	P	P	P	P	P	P	NP	C	C	C
Housing, Multi-family	NP	NP	NP	NP	NP	NP	P	NP	NP	NP	NP

Formatted Table

Formatted Table

Mobile Home Park	NP	NP	NP	NP	NP	NP	~~NP~~				
Nursing Home	C	C	C	C	C	C	C	NP	C	C	NP
Temporary Office/Model Home	C	C	C	C	C	C	C	NP	C	C	C
Accessory Dwelling Unit[3]	P	P	P	P	P	P	P	P	P	P	P
Use	**A**	**R-E**	**R-1**	**R-1A**	**R-2**	**R-2A**	**R-M**	**P/S**	**C**	**C-N**	**I**
Agricultural/Animal											
Ag Implement Sales and Service	C	NP	NP	NP	NP	NP	~~NP~~				
Agricultural Production	P	P	P	P	P	P	P	P	C	C	C
Animal Crematorium	NP	NP	NP	NP	NP	NP	NP	NP	C	NP	C
Arboretum/Nature Center	C	C	C	C	C	C	C	C	C	C	C
Farmers' Market	C	C	C	NP	NP	NP	C	C	C	C	C
Floral Shop	C	C	C	C	NP	NP	P	NP	P	P	P
Garden Center/Nursery	C	C	NP	NP	NP	NP	C	NP	C	P	C
Veterinary Clinic, Large Animal	P	NP	NP	NP	NP	NP	C	NP	C	NP	C
Veterinary Clinic, Small Animal	P	NP	NP	NP	NP	NP	C	NP	C	C	C
Use	**A**	**R-E**	**R-1**	**R-1A**	**R-2**	**R-2A**	**R-M**	**P/S**	**C**	**C-N**	**I**
Public, Institutional, and Civic Uses											
Bus/Transit Terminal	NP	NP	NP	NP	NP	NP	~~C~~				

Formatted Table

Formatted Table

Formatted Table

Cemetery	C	C	C	C	C	C	C	P	NP	NP	NP
Church/Places of Worship	C	C	C	C	C	C	C	C	C	C	C
Club/Service Organization/Lodge	NP	NP	NP	NP	NP	NP	C	C	C	NP	C
College/University	C	NP	NP	NP	NP	NP	C	P	C	NP	C
Government Services	P	NP	NP	NP	NP	NP	P	P	P	NP	P
Hospital	NP	NP	NP	NP	NP	NP	C	NP	C	NP	C
Public Park	P	P	P	P	P	P	P	P	P	P	P
Private Park	P	P	P	P	P	P	P	P	P	P	P
Utility Substation	C	C	C	C	C	C	C	C	C	C	C
School	C	C	C	C	C	C	C	P	P	C	P
Use	**A**	**R-E**	**R-1**	**R-1A**	**R-2**	**R-2A**	**R-M**	**P/S**	**C**	**C-N**	**I**
Commercial											
Auditorium	NP	NP	NP	NP	NP	NP	C				
Bail Bonds/Pawnbroker	NP	NP	NP	NP	NP	NP	NP	NP	C	NP	C
Bakery	NP	NP	NP	NP	NP	NP	P	NP	P	P	P
Banks/Financial Institutions	NP	NP	NP	NP	NP	NP	P	NP	P	P	P
Beauty Salon/Spa	NP	NP	NP	NP	NP	NP	P	NP	P	P	P
Business Equipment Sales and Service	NP	NP	NP	NP	NP	NP	C	NP	C	C	C
Car Wash	NP	NP	NP	NP	NP	NP	C	NP	P	P	P

Formatted Table

Check Cashing/Credit Services	NP	NP	NP	NP	NP	NP	NP	NP	C	NP	C
Construction Sales and Service	NP	NP	NP	NP	NP	NP	NP	NP	C	NP	C
Daycare/Preschool, Commercial	NP	NP	NP	NP	NP	NP	P	NP	P	P	P
Funeral Home	NP	NP	NP	NP	NP	NP	P	NP	P	P	P
Gasoline Service Station	NP	NP	NP	NP	NP	NP	C	NP	P	P	P
Gasoline, Wholesale	NP	NP	NP	NP	NP	NP	NP	NP	NP	NP	C
Hotel/Motel	NP	NP	NP	NP	NP	NP	C	NP	C	C	C
Laundry Service	NP	NP	NP	NP	NP	NP	C	NP	C	C	C
Liquor Store	NP	NP	NP	NP	NP	NP	C	NP	C	NP	C
Low Power Radio Service/Cell Tower	NP	NP	NP	NP	NP	NP	C	NP	C	NP	C
Medical/Dental Offices and Clinic	NP	NP	NP	NP	NP	NP	P	NP	P	P	P
Medical Sales and Service	NP	NP	NP	NP	NP	NP	P	NP	P	P	P
Personal Instruction Services	C	C	C	C	C	C	C	C	C	C	C
Motor Vehicle Sales and Service	NP	NP	NP	NP	NP	NP	NP	NP	C	C	C
Office, Corporate	C	NP	NP	NP	NP	NP	C	NP	C	C	C
Offices, Professional	NP	NP	NP	NP	NP	NP	P	NP	P	P	P
Parking, Commercial	NP	NP	NP	NP	NP	NP	NP	NP	C	NP	C
Plumbing Services	NP	NP	NP	NP	NP	NP	C	NP	P	C	P
Printing/Copying, Commercial	NP	NP	NP	NP	NP	NP	P	NP	P	P	P
Protective Services	NP	NP	NP	NP	NP	NP	C	NP	C	NP	C

Recreation/Entertainment, Commercial	NP	NP	NP	NP	NP	NP	C	C	C	C	C
Restaurant, Fast Food	NP	NP	NP	NP	NP	NP	C	C	P	P	P
Retail	NP	NP	NP	NP	NP	NP	P	NP	P	P	P
Repair Service, General	NP	NP	NP	NP	NP	NP	C	NP	C	C	C
Research and Development	C	NP	NP	NP	NP	NP	C	NP	C	NP	C
Research Service	NP	NP	NP	NP	NP	NP	C	NP	C	NP	C
Sexually Oriented Business	NP	NP	NP	NP	NP	NP	NP	NP	NP	NP	C
Transportation Services	NP	NP	NP	NP	NP	NP	NP	NP	C	NP	C
Temporary Vendor/Food Trucks	C	NP	NP	NP	NP	NP	P	C	P	P	P
Use	**A**	**R-E**	**R-1**	**R-1A**	**R-2**	**R-2A**	**R-M**	**P/S**	**C**	**C-N**	**I**
Industrial											
Junk/Salvage Yard	NP	NP	NP	NP	NP	NP	NP				
Manufacturing, Heavy	NP	NP	NP	NP	NP	NP	NP	NP	NP	NP	C
Manufacturing, Industrial	NP	NP	NP	NP	NP	NP	NP	NP	NP	NP	NP
Manufacturing, Light	NP	NP	NP	NP	NP	NP	NP	NP	NP	NP	C
Mineral Extraction	NP	NP	NP	NP	NP	NP	NP	NP	NP	NP	C
Pest Control	NP	NP	NP	NP	NP	NP	NP	NP	NP	NP	C
Recycling Collection Facility	NP	NP	NP	NP	NP	NP	NP	NP	NP	NP	C
Sign Shop	NP	NP	NP	NP	NP	NP	NP	NP	NP	NP	C

Formatted Table

Sports Facilities	NP	NP	NP	NP	NP	NP	C	C	C	NP	C
Storage Facility	NP	NP	NP	NP	NP	NP	NP	NP	NP	NP	C
Warehousing	NP	NP	NP	NP	NP	NP	NP	NP	NP	NP	C
Warehousing, Residential Storage	NP	NP	NP	NP	NP	NP	NP	NP	NP	NP	C
Welding/Machine Shop	NP	NP	NP	NP	NP	NP	NP	NP	NP	NP	C

Notes

1. Group living facilities are governed by NCC 19.42

2. Any land use not listed is not permitted

3. Accessory dwelling units are governed by NCC 19.24.250

19.04.010 Definitions

HOUSING, MULTI-FAMILY: A single building situated on one lot and that contains three (3) or more separate dwelling units. Entrances to the dwelling units may be separate or combined. The units may be rented or owned as in a condominium. ~~Multi-family units may only be developed as part of a conservation residential subdivision.~~

Formatted: Normal (Web), Space Before: 0 pt, After: 7.5 pt, No bullets or numbering

RESOLUTION 18-10

A RESOLUTION ESTABLISHING AN AMENDMENT TO THE NIBLEY CITY GENERAL PLAN: ADDING THE PROPOSED FUTURE LAND USE MAP

WHEREAS, Utah law allows municipalities to create land use laws within their boundries to benefit their residents; and

WHEREAS, Nibley City has established zoning, land use laws, standards, and requirements to help enhance the lives and property of Nibley residents; and

WHEREAS, large areas of land around Nibley City are unincorporated and will likely develop in the future; and

WHEREAS, Nibley City wishes to accept annexation petitions in areas surrounding the City for the benefit of property owners and current and future Nibley residents; and

WHEREAS, Nibley City wishes to update the Future Land Use Map to help plan for uses within Nibley City boundaries and for future annexations and developments.

NOW, THEREFORE, BE IT RESOLVED BY THE CITY COUNCIL OF NIBLEY CITY, STATE OF UTAH, AS FOLLOWS:

1. That the attached Future Land Use Map is accepted and adopted by the Nibley City Council.
2. That the City Council accepts the attached Statement of Intent.
3. That the attached Statement of Intent and Future Land Use Map shall be attached as an appendix to the Nibley City General Plan and replace the previously adopted Future Land Use Map.

Dated this 4 day of October 2018

NIBLEY CITY CORPORATE SEAL CACHE COUNTY, UT

Shaun Dustin, Mayor

ATTEST

David Zook, City Recorder

FUTURE LAND USE MAP STATEMENT OF INTENT:

The Future Land Use Map is a plan to help guide Nibley City as it grows. The map encourages a variety of land use options throughout the City. The map is intended to help guide the City in assigning future zoning to newly annexed areas, reassigning zoning as needed, reviewing land use applications, and creating new zones and land use policy. The Future Land Use Map is a planning tool and does not represent or guarantee current or future zoning. The City will evaluate each land use application based on current adopted City Ordinances and best planning practices and information available at the time of application. The intent of the City Council in approving this map is not to limit uses to locations only described on the map, but to help guide the City on where land uses may be the most appropriate in the future. It is also intended to ensure future land use and zoning is coordinated across the City. This map does not dictate everywhere where open space, parks, agricultural land, neighborhood commercial, planned unit developments, or other land uses may occur. The City Council may evaluate the Future Land Use Map and make edits as needed from time to time.

Nibley City

Future Land Use

10/16/2018

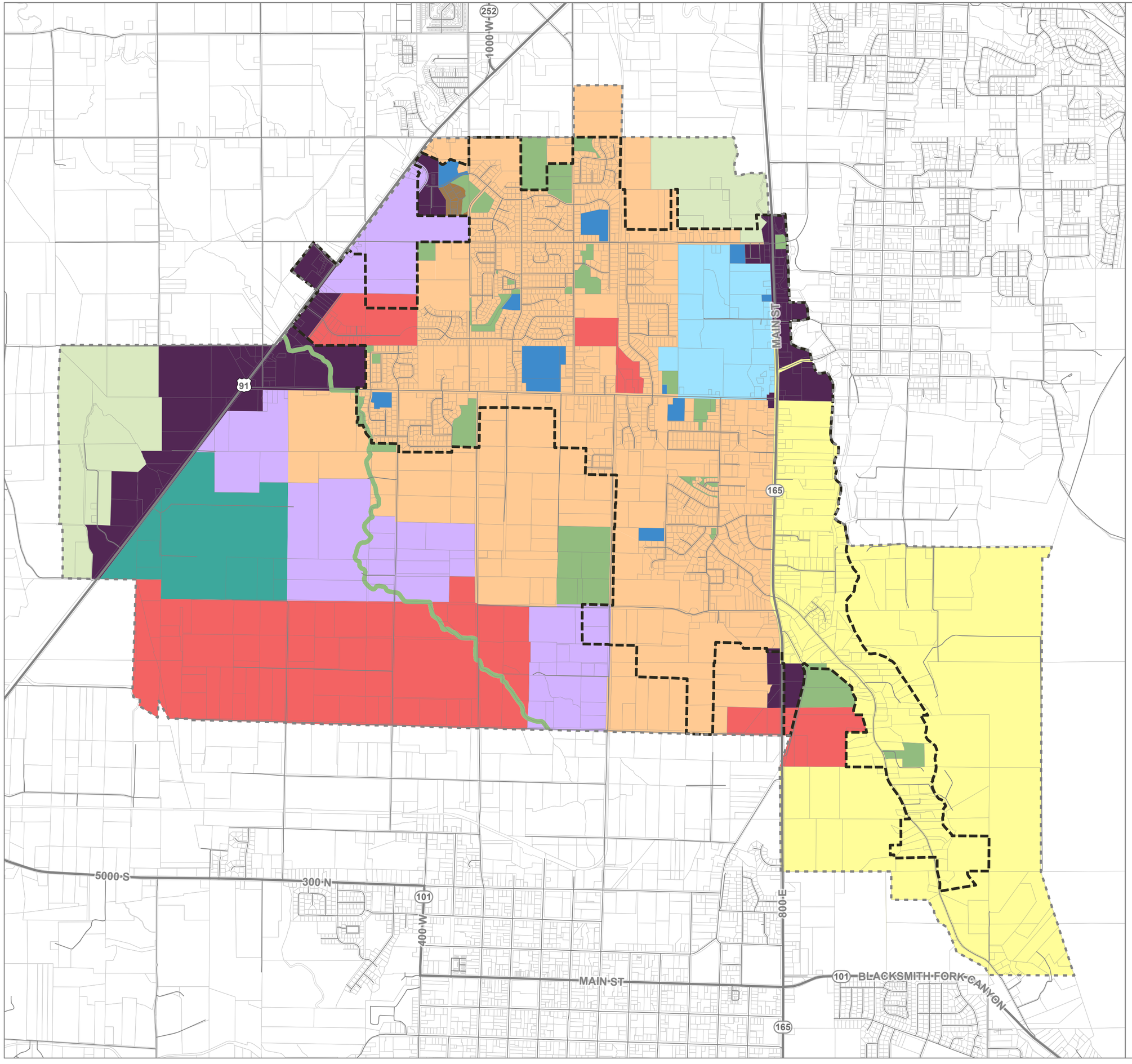

- Nibley City Boundary
- Annexation Declaration Boundary
- Parks, Open Space, and Trails
- Agriculture
- Open Space, Agriculture, and Low Density Residential
- Low Density Residential
- Medium Density Residential
- High Density Residential
- Commercial and Medium to High Density Residential
- Commercial
- Industrial
- Municipal, Schools, and Churches
- Town Center

This document and the ideas and designs incorporated herein, as an instrument of professional service, is the property of J-U-B Engineers, Inc., and is not to be used, in whole or part, for any other project without the express written authorization of J-U-B Engineers, Inc.

N

0 0.5 1 Miles

J-U-B ENGINEERS, INC.

THE LANGDON GROUP a J-U-B Company

GATEWAY MAPPING INC. a J-U-B Company

OTHER J-U-B COMPANIES