ALPINE CITY PLANNING COMMISSION MEETING

NOTICE is hereby given that the **PLANNING COMMISSION** of Alpine City, Utah will hold a **Regular Meeting at Alpine City Hall,** 20 North Main, Alpine, Utah on **Tuesday, July 16, 2013 at 7:00 pm** as follows:

I. GENERAL BUSINESS

A. Welcome and Roll Call: Jannicke Brewer
B. Prayer/Opening Comments: Jason Thelin

II. PUBLIC COMMENT

Any person wishing to comment on any item not on the agenda may address the Planning Commission at this point by stepping to the microphone and giving his or her name and address for the record.

III. AGENDA ITEMS

A. Bennett Farms Final Plat D - Roger Bennett - approx. 1200 East Fox Meadow
The Planning Commission will review the final for Plat D in the Bennett Farms Subdivision.

B. T-Mobile Cellular Tower Modification Site Plan - Terry Cox - approx. 694 South Rocky Mountain Drive (Shepherds Hill)
The Planning Commission will review the site plan for a cellular tower modification.

C. Eagle Pointe Subdivision - Mark Wells and Taylor Smith - approx. 800 West 600 North
The Planning Commission will review the proposed development and make a recommendation to the City Council on whether or not the development should be a Planned Residential Development.

D. Home Occupation - J&L Endeavors LLC - James Lawrence - 255 North Main Street
The Planning Commission will review the application for a home occupation business license.

E. Home Occupation - Roadside Classics - Brad Hawkes - 1267 East Round Mountain Circle
The Planning Commission will review the application for a home occupation business license.

IV. COMMUNICATIONS

V. APPROVAL OF PLANNING COMMISSION MINUTES: June 4, 2013

ADJOURN

Chairman Jannicke Brewer
July 11, 2013

THE PUBLIC IS INVITED TO ATTEND ALL PLANNING COMMISSION MEETINGS. If you need a special accommodation to participate in the meeting, please call the City Recorder's Office at 801-756-6347 ext. 5.

CERTIFICATION OF POSTING. The undersigned duly appointed recorder does hereby certify that the above agenda notice was posted in three public places within Alpine City limits. These public places being a bulletin board located inside City Hall at 20 North Main and located in the lobby of the Bank of American Fork, Alpine Branch, 133 S. Main, Alpine, UT; and the bulletin board located at The Junction, 400 S. Main, Alpine, UT. The above agenda notice was sent by e-mail to The Daily Herald located in Provo, UT a local newspaper circulated in Alpine, UT. This agenda is also available on the City's web site at www.alpinecity.org and on the Utah Public Meeting Notices website at www.utah.gov/pmn/index.html.

PUBLIC MEETING AND PUBLIC HEARING ETIQUETTE

Please remember all public meetings and public hearings are now recorded.

- All comments **must** be recognized by the Chairperson and addressed through the microphone.
- When speaking to the Planning Commission, please stand, speak slowly and clearly into the microphone, and state your name and address for the recorded record.
- Be respectful to others and refrain from disruptions during the meeting. Please refrain from conversation with others in the audience as the microphones are very sensitive and can pick up whispers in the back of the room.
- Keep comments constructive and not disruptive.
- Avoid verbal approval or dissatisfaction of the ongoing discussion (i.e., booing or applauding).
- Exhibits (photos, petitions, etc.) given to the City become the property of the City.
- Please silence all cellular phones, beepers, pagers or other noise making devices.
- Be considerate of others who wish to speak by limiting your comments to a reasonable length, and avoiding repetition of what has already been said. Individuals may be limited to two minutes and group representatives may be limited to five minutes.
- Refrain from congregating near the doors or in the lobby area outside the council room to talk as it can be very noisy and disruptive. If you must carry on conversation in this area, please be as quiet as possible. (The doors must remain open during a public meeting/hearing.)

Public Hearing v. Public Meeting

If the meeting is a **public hearing**, the public may participate during that time and may present opinions and evidence for the issue for which the hearing is being held. In a public hearing there may be some restrictions on participation such as time limits.

Anyone can observe a **public meeting**, but there is no right to speak or be heard there - the public participates in presenting opinions and evidence at the pleasure of the body conducting the meeting.

ALPINE PLANNING COMMISSION AGENDA

SUBJECT: Bennett Farms Subdivision

FOR CONSIDERATION ON: 16 July 2013

PETITIONER: Roger Bennett

ACTION REQUESTED BY PETITIONER: Approve Final Plat D

APPLICABLE STATUTE OR ORDINANCE: Zoning

PETITION IN COMPLIANCE WITH ORDINANCE: Yes

BACKGROUND INFORMATION:

The proposed Bennett Farms Subdivision Plat D consists of 5 lots on 6.1459 acres. The property was recently annexed into the City with a CR-40,000 zone designation.

RECOMMENDED ACTION:

We recommend final approval of the proposed development subject to the following conditions:

- Approval be granted to not require a temporary turnaround at the north end of Country Manor Lane, with the understanding that the stub street will not be plowed by the City.
- The developer work with City staff to obtain the necessary SWPPP permits and approvals for this plat.
- The water policy be met with Alpine Irrigation Company shares.
- A bond be provided for the required improvements.
- That the errors be corrected on the final plat.
- The debris flow hazard study be tied to the title of the properties in some manner to make potential lot buyers aware of the potential risks when building in the area.

Date: July 9, 2013

By: Shane L. Sorensen, P.E.
City Engineer

Subject: Bennett Farms Subdivision Plat D
Final Review
5 lots on 6.1459 acres

Background

The proposed Bennett Farms Subdivision Plat D consists of 5 lots on 6.1459 acres. The property was recently annexed into the City with a CR-40,000 zone designation.

Street System

Construction of this plat will connect Country Manor Lane and Fox Meadow. All streets will require curb, gutter and sidewalk as per City Standards.

The developer has requested that a temporary turnaround not be required at the north end of Country Manor Lane. The DRC recommends approval of this request subject the condition that the stub street from the intersection north will not be plowed by City snow plows.

Sewer System

There is an existing 8-inch sewer line in Fox Meadow that will need to be extended to the intersection and then north and south to serve the lots. 4-inch sewer laterals will be required for each lot.

Culinary Water System

There are existing 8-inch water lines in Country Manor Lane and Fox Meadow that will need to be extended in all of the new streets within the development. ¾-inch water laterals will be required for each lot. A new fire hydrant is proposed at the north end of Country Manor Lane. The location of the fire hydrant will need to be approved by the Fire Marshall.

Alpine City Engineering
20 North Main • Alpine, Utah 84004

Pressurized Irrigation System

There are existing 6-inch pressurized irrigation lines in Country Manor Lane and Fox Meadow that will need to be extended in all of the new streets within the development. 1-inch laterals will be required for each lot.

Storm Water Drainage/SWPPP

The storm drain system designed for this plat consists of constructing a series of catch basins and piping to collect the storm water and convey the water to a detention basin west of lot 5. The storm water will be released from the catch basin at a controlled rate and discharged into the existing storm drain in Fox Meadow. Storm drain calculations have been provided previously.

An overall storm water pollution prevention plan (SWPPP) was submitted for the entire development. A SWPPP specific to this plat will be required. The developer will be required to work with City staff to obtain the necessary permits and approvals for this plat.

General Subdivision Remarks

The developer has indicated that Alpine Irrigation Company shares will be used to meet the City's water policy.

A bond will need to be provided for the development improvements. There are several errors that need to be corrected on the final plat.

Section 3.12 of the City's development codes outlines the requirements for areas considered as sensitive land. The applicability of this ordinance to lands is based on hazard maps that have been adopted by the City showing the location and extent of potential hazards with the City and other factors. The majority of the property is shown on the maps as falling within the Geologic Hazards Overlay Zone, particularly having potential for debris flow hazards. This is to be expected as the property sits near the base of the mountains and is situated within the alluvial fan. A letter dated September 18, 2012, from Earthtec Engineering was submitted to address the potential for debris flow hazards. The recommended improvements are located in other phases of the development. It will need to be determined if the lots in the current plat will require those improvements concurrent with this plat or if the improvements can be constructed with a future plat. This information also should be referenced on the plat or tied to the property abstracts so potential buyers will be aware of the potential risks involved with building in the area.

We recommend final approval of the proposed development subject to the following conditions:

- **Approval be granted to not require a temporary turnaround at the north end of Country Manor Lane, with the understanding that the stub street will not be plowed by the City.**
- **The developer work with City staff to obtain the necessary SWPPP permits and approvals for this plat.**
- **The water policy be met with Alpine Irrigation Company shares.**
- **A bond be provided for the required improvements.**
- **That the errors be corrected on the final plat.**
- **The debris flow hazard study be tied to the title of the properties in some manner to make potential lot buyers aware of the potential risks when building in the area.**

July 9, 2013

Jason Bond, City Planner
Alpine City
20 North Main
Alpine, Utah 84004

Subject: Bennett Farms Plat D - Water Requirement
4 lots on 3.729 acres

Dear Jason:

We have calculated the water requirement for the Bennett Farms Subdivision Plat C subdivision. The subdivision consists of 5 lots on 6.1459 acres. The developer will be required to provide 10.98 acre-feet of water to meet the water policy for the development, which includes water rights for the detention basin.

Please contact me if you have any questions.

Sincerely,
ALPINE CITY

Shane L. Sorensen, P.E.
City Engineer

cc: File
Developer

Curve Data Table

#	Arc	Chord Bears		Delta	Radius	Tangent
C1	9.991'	S 88°32'33" W	9.990'	2°55'15"	196.00'	4.997'
C2	75.343'	S 23°38'10" E	75.201'	12°11'40"	354.00'	37.814'
C3	31.416'	S 15°16' W	28.284'	90°00'	20.00'	20.00'
C4	91.722'	S 73°40'23" W	90.887'	26°48'45"	196.00'	46.717'
C5	63.85'	N 23°38'10" W	63.73'	12°11'40"	300.00'	32.046'
C6	69.388'	N 68°13'04" E	69.165'	15°54'09"	250.00'	34.918'
C7	31.416'	S 74°44' E	28.284'	90°00'	20.00'	20.00'
C8	60.349'	N 83°05'04" E	60.202'	13°49'51"	250.00'	30.322'
C9	69.597'	N 23°38'10" W	69.465'	12°11'40"	327.00'	34.93'
C10	115.725'	N 75°08' E	114.431'	29°44'	223.00'	59.197'

T (Tangent) Data Table

#	Bearing	Distance
T1	S 17°32'20" E	36.267'
T2	EAST	16.487'
T3	N 26°35'05" W	30.192'
T4	N 26°35'05" W	3.065'
T5	N 15°04'06" W	25.123'

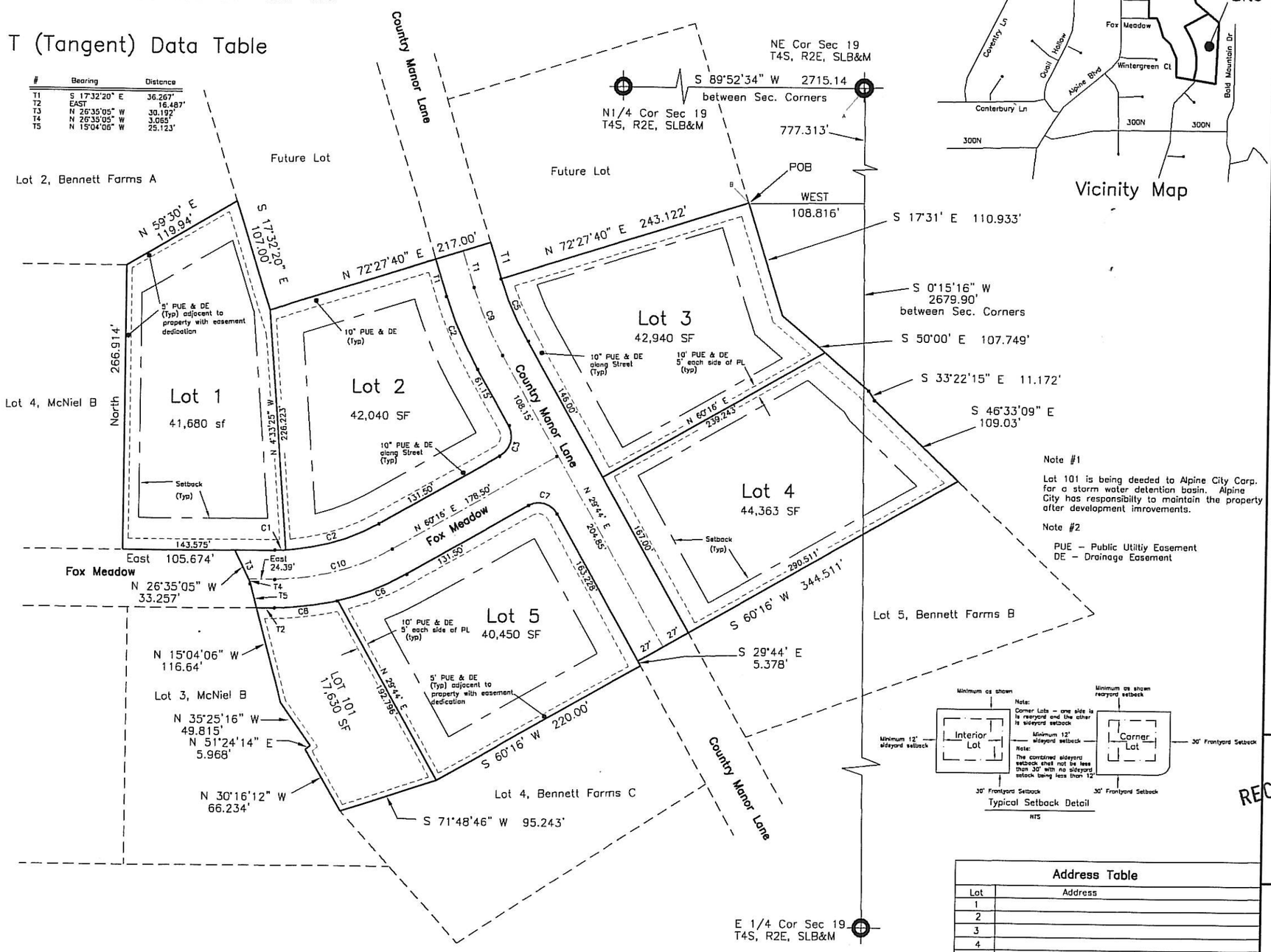

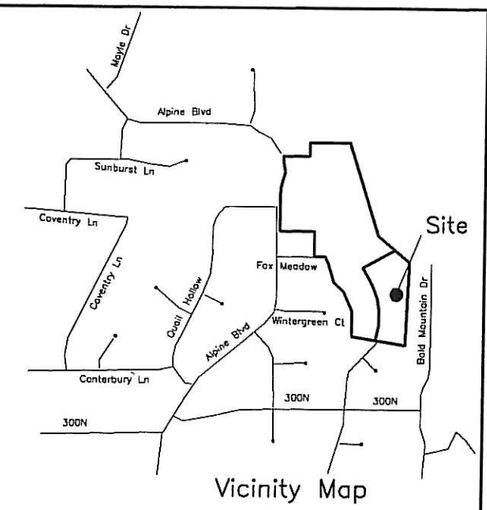

Vicinity Map

Typical Setback Detail

NTS

Address Table

Lot	Address
1	
2	
3	
4	
5	
101	

Surveyor's Certificate

I, K. Edward Gifford, do hereby certify that I am a Registered Land Surveyor, and that I hold certificate No. 162675 as prescribed under the laws of the State of Utah. I further certify by authority of the Owners, I have made a survey of the tract of land shown on this plat and described below, and have subdivided said tract of land into Lots, Blocks, Streets, and Easements and the same has been correctly surveyed and staked on the ground as shown on this plat and that this plat is true and correct.

Boundary Description:

Commencing at a point located S 0°15'16" W 777.313' along the section line and West 108.816' from the Northeast Corner of Section 19, Township 4 South, Rang 2 East, Salt Lake Base and Meridian; thence S 17°31'E 110.93'; thence S 50°00' E 107.; thence S 33°22'15" E 11.172'; thence S 46°33'09" E 109.03'; thence along Bennett Far Plats B & C as follows: S 60°16' W 344.511', S 29°44' E 5.378', S 60°16' W 220.00' S 71°48'46" W 95.243'; thence along McNiel Plat B as follows: N 30°16'12" W 66.234', N 51°24'14" E 5.968', N 35°25'16" W 49.815', N 15°04'06" W 116.64', N 26°35'05" W 33.257', West 105.674', North 266.914'; thence N 59°30' E 119.94'; thence S 17°32'30' 107.00'; thence N 72°27'40" E 217.00'; thence S 17 '20" E 36.267'; thence N 72°27'40" E 243.122' to the point of beginning.

Area= 6.1459 acres

Coordinate System is NAD 27

K. Edward Gifford — Date

Owner's Dedication

Know all men by these presents that we, all of the undersigned Owners of all of the property described in the Surveyor's Certificate hereon and shown on this map, have cau the same to be subdivided into Lots, Blocks, Streets and Easements and do hereby dedi the Streets and other Public Areas as indicated hereon for the perpetual use of the Pub In witness hereof we have hereunto set our hands this

_____ day of _____ , A.D. 201__

Acknowledgement

State of Utah }
} S.S.
County of Utah }

On this ___ Day of _____ , A.D. 201 _ Personally appeared before me the signers of the foregoing dedication who duly acknowledge to me that they did execute the sar

My Commission Expires _____

A Notary Public Commissioned in Utah

Notary Address

Printed Full name of Notary

Acceptance by Legislative Body

The of , County of Utah, approves this subdivision and hereby accpets the dedication of all Streets, Easements, and other Parcels of Land intended for Public Purposes for the perpetual use of the Public this _____ Day _____ , A.D. 201_

Approved _____ Engineer (See Seal Below)

Attest _____ Clerk–Recorder (See Seal Below)

Planning Commission Approval

Approved this____ Day of _____ , A.D. 201__ , by the Alpine City Planning Commis

Director–Secretary

Chairman, Planning Commission

Approval as to Form

Approved as to Form this____ Day of _____, A.D. 201___

City Attorney _____

RECEIVED JUL 08 2013

Plat "D"

Bennett Farms

SUBDIVISION

SCALE 1" = 50'

ALPINE, UTAH COUNTY, U

Surveyor's Seal	Notary Public Seal	City Engineers Seal	Clerk–Recorder Se

ALPINE PLANNING COMMISSION AGENDA

SUBJECT: T-Mobile Cellular Tower Modification Site Plan

FOR CONSIDERATION ON: 16 July 2013

PETITIONER: Terry Cox

ACTION REQUESTED BY PETITIONER: Approve the Plan to Modify T-Mobile Cellular Tower

APPLICABLE STATUTE OR ORDINANCE: Zoning

PETITION IN COMPLIANCE WITH ORDINANCE: Yes

BACKGROUND INFORMATION:

An antenna replacement project at the T-Mobile site located at 694 Rocky Mountain Drive (Shepherd's Hill) is being proposed. Upgrading an existing tower is a permitted use by ordinance.

The project includes a system upgrade to modernize the tower. T-Mobile needs to remove the existing antennas and replace them with smaller antennas that are designed to broadcast in the new modernization format. T-Mobile will also remove one of the existing cabinets on the existing cement pad and replace it with a cabinet that looks similar to the one they will remove.

RECOMMENDED ACTION:

We recommend approval of the proposed site plan subject to the following conditions:

- A building permit be obtained prior to installation of the new equipment.
- The Planning Commission determine if any additional landscaping will be required.
- The color of the new equipment be provided and approved.

Memo

To: Alpine City Planning Commission

From: Jason Bond
City Planner

Date: July 8, 2013

Subject: T-Mobile Cellular Tower Modification Site Plan

We have reviewed the T-Mobile Cellular Tower Modification Site Plan to determine if it complies with City ordinances. A site plan has been submitted, in addition to the supporting information that is required. Notification letters have been mailed, applicable fees paid and a sign posted at the site.

The purpose of the modification is to do a system upgrade to modernize the existing tower. T-mobile needs to remove the existing antennas and replace them with smaller antennas that are designed to broadcast in the new modernization format. It appears on the plans that the only changes will be that the new antennas will be slightly thicker but shorter in height. One existing equipment cabinet will be replaced by a new one and some equipment mounted to the wall will be removed. It is our understanding that the new equipment, mounted as shown on the plans, will meet the requirements of the ordinance. Upgrading an existing tower is a permitted use by the ordinance. A building permit will need to be obtained by the applicant prior to installing the new equipment.

The Planning Commission will need to determine if any additional landscaping will be required. The applicant needs to indicate the proposed color of the new equipment to allow the City to determine if it is acceptable.

WE RECOMMEND APPROVAL OF THE PROPOSED SITE PLAN SUBJECT TO THE FOLLOWING CONDITIONS:

- **A building permit be obtained prior to installation of the new equipment.**
- **The Planning Commission determine if any additional landscaping will be required.**
- **The color of the new equipment be provided and approved.**

Jason Bond - City Planner
20 North Main - Alpine, Utah 84004
(801) 756-6347 x 6
jbond@alpinecity.org

T · ·Mobile·

June 17, 2013

Alpine City Planning & Zoning
20 N. Main St.
Alpine, UT 84004

RE: Modification to Existing Wireless Tower Located at 651 S. Bateman, Alpine, UT "Shepherd Hill"

To Whom It May Concern:

As you may be aware, on February 22, 2012, the federal government enacted "collocation-by-right" legislation preempting delays in the process of zoning the collocation of transmission equipment on existing wireless communications facilities (Middle Class Tax Relief and Job Creation Act of 2012, Pub. L. No. 112-96, § 6409 (2012)) (hereinafter, the "**Federal Collocation-By-Right Legislation**"). The Federal Collocation-By-Right Legislation mandates that local governments must approve any eligible facilities request for the modification of an existing wireless tower or base station that does not substantially change the physical dimensions of such tower or base station.

Enclosed herein please find the application materials required for zoning approval of the modification to the wireless tower located at 651 S. Bateman. Please note that: (i) the modification involves the replacement of transmission equipment; and (ii) such modification will not substantially change the physical dimensions of such tower. Under the Federal Collocation-By-Right Legislation, Alpine City Planning & Zoning must therefore approve this request.

The proposed modification complies with all federal, state, and local zoning and permitting requirements. It is our expectation that this application will be processed without any undue delay and in a manner consistent with the newly enacted Federal Collocation-By-Right Legislation. Thank you in advance for your anticipated cooperation.

Regards,

Mark Whitlock
Partner Delivery Manager

T-Mobile USA, Inc.
121 Election Rd Ste 330
Draper, UT 84020

T-Mobile

July 2, 2013

Alpine City Planning and Zoning
20 N Main St.
Alpine Utah 84004

To whom it may concern:

T-Mobile is going through a system upgrade to modernize all of its towers including the one on Shepherd Hill. T-Mobile needs to remove the existing antennas and replace them with smaller antennas that are designed to broadcast in the new modernization format. The overall appearance of the tower will look basically the same as it has since it was built.

T-Mobile will also remove one of the existing cabinets on the existing cement pad and replace it with a cabinet that looks similar to the one they will remove. Once again visually it will not look any different than it does today..

Thanks

Terry Cox
T-Mobile
801-860-0285

T-Mobile USA, Inc.
121 Election Rd Ste 330
Draper, UT 84020

RECEIVED JUN 12 2013 13-054 A

PROPRIETY INFORMATION:
THE INFORMATION CONTAINED IN THIS SET OF DRAWINGS IS PROPRIETARY BY NATURE. ANY USE OR DISCLOSURE OTHER THAN THAT WHICH RELATES TO T-MOBILE SERVICES IS STRICTLY PROHIBITED.

T-Mobile

DISCLOSURE:
NO SITE WALK WAS CONDUCTED FOR THESE DRAWINGS. DATA WAS PROVIDED BY T-MOBILE AND CROWN CASTLE. CONTRACTOR TO VERIFY MATERIALS AND DESIGN PRIOR TO INSTALL.

SL01122A ALPINE SHEPHERD HILL

651 SOUTH BATEMAN LANE
ALPINE, UT 84004

SCOPE OF WORK

T-MOBILE IS PROPOSING TO REMOVE SIXE (6) ANTENNAS AND TWELVE (12) LINES OF COAX. T-MOBILE IS PROPOSING TO INSTALL SIX (6) NEW ANTENNAS AND ONE (1) NEW FIBER CABLE. FINAL TOWER CONFIGURATION WILL BE SIX (6) ANTENNAS, THREE (3) TMAs, TWELVE (12) LINES OF COAX AND ONE (1) FIBER CABLE.

GENERAL LOCATION MAP

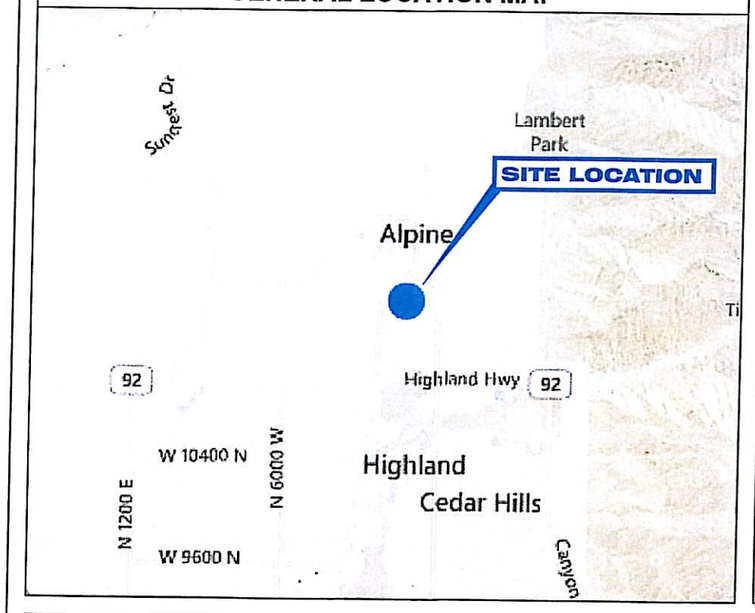

VICINITY MAP

MODERNIZATION EQUIPMENT LIST

SECTOR	TYPE	MODEL	QUANTITY
ALPHA	ANTENNA	ERICSSON AIR 21	2
ALPHA	TMA	ANDREW TWIN AWS	1
ALPHA	COAX	7/8" - 100'	4
BETA	ANTENNA	ERICSSON AIR 21	2
BETA	TMA	ANDREW TWIN AWS	1
BETA	COAX	7/8" - 100'	4
GAMMA	ANTENNA	ERICSSON AIR 21	2
GAMMA	TMA	ANDREW TWIN AWS	1
GAMMA	COAX	7/8" - 100'	4
SITE	FIBER	9X18 MLE HYBRID	1

T-Mobile

LAND DESIGN & DEVELOPMENT LLC

stillwater management

LICENSED PROFESSIONAL ENGINEER No. 5213 JOHN C. GUEBEL STATE OF UTAH 6/11/13

DATE: 5-10-2013
DRAWN BY: CJS (STILLWATER)
CHECKED BY: MATT HODGEN

REVISIONS

DATE	DESCRIPTION	INT.
5-10-13	PRELIM ZDs	CJS
5-14-13	FINAL ZDs	CJS
6-6-13	FINAL CDs	CJS

SL01122A
ALPINE SHEPHERD HILL
651 SOUTH BATEMAN LANE
ALPINE, UT 84004

APPROVALS

APPROVED BY	PRINT NAME	INITIALS	DATE
PROJECT MANAGER			
RF ENGINEER			
OPS MANAGER			
CONSTRUCTION			
LANDLORD			

CONTACT INFORMATION

STRUCTURE OWNER
CROWN CASTLE USA, INC
5350 NORTH 48TH STREET
CHANDLER, AZ 85226

SITE ACQUISITION FIRM
RAGE DEVELOPMENT LLC
2181 HUGO AVENUE
SALT LAKE CITY, UT 84117

NETWORK SYSTEMS OWNER
T-MOBILE
121 WEST ELECTION RD. STE. 330
DRAPER, UT 84020

A/E FIRM
STILLWATER MANAGEMENT, LLC
2977 CONNOR STREET
SALT LAKE CITY, UT 84109

DRAWING TITLE: TITLE SHEET

DRAWING NO.: T-1

GENERAL CONSTRUCTION NOTES

1. DRAWINGS WERE PREPARED FROM STANDARDIZED DETAILS DEVELOPED AND PROVIDED BY T-MOBILE WEST, LLC ("T-MOBILE"). STANDARDIZED DETAILS ARE TO BE CONFIRMED AND CORRELATED AT THE SITE BY THE CONTRACTOR. STANDARDIZED DETAILS THAT REQUIRE MODIFICATIONS DUE TO ACTUAL FIELD CONDITIONS AND REQUIREMENTS MUST BE SUBMITTED TO, AND APPROVED BY, T-MOBILE PRIOR TO START OF WORK.

2. DRAWINGS ARE NOT TO BE SCALED. WRITTEN DIMENSIONS TAKE PRECEDENCE. THIS SET OF DOCUMENTS IS INTENDED TO BE USED FOR DIAGRAM PURPOSES ONLY. UNLESS OTHERWISE NOTED. THE CONTRACTOR IS RESPONSIBLE FOR ALL DIMENSIONS.

3. THE GENERAL CONTRACTOR'S SCOPE OF WORK SHALL INCLUDE FURNISHING ALL MATERIALS, EQUIPMENT, LABOR, AND ANY REQUIREMENTS DEEMED NECESSARY TO COMPLETE INSTALLATION AS DESCRIBED IN THE DRAWINGS AND AS DISCUSSED ON THE SITE WALK.

4. PRIOR TO THE SUBMISSION OF BIDS, CONTRACTORS INVOLVED SHALL VISIT THE JOB SITE TO FAMILIARIZE THEMSELVES WITH ALL CONDITIONS AFFECTING THE PROPOSED PROJECT. CONTRACTORS SHALL VISIT THE CONSTRUCTION SITE WITH THE CONSTRUCTION DOCUMENTS TO VERIFY FIELD CONDITIONS AND CONFIRM THAT THE PROJECT WILL BE ACCOMPLISHED AS SHOWN. PRIOR TO PROCEEDING WITH CONSTRUCTION, ANY ERRORS, OMISSIONS, OR DISCREPANCIES SHALL BE BROUGHT TO THE ATTENTION OF T-MOBILE VERBALLY AND IN WRITING.

5. THE GENERAL CONTRACTOR SHALL RECEIVE WRITTEN AUTHORIZATION TO PROCEED WITH CONSTRUCTION PRIOR TO STARTING WORK ON ANY ITEM NOT CLEARLY DEFINED BY THE CONSTRUCTION DRAWINGS.

6. THE CONTRACTOR SHALL SUPERVISE AND DIRECT THE PROJECT DESCRIBED IN THE CONTRACT DOCUMENTS. THE CONTRACTOR SHALL BE SOLELY RESPONSIBLE FOR ALL CONSTRUCTION MEANS, METHODS, TECHNIQUES, SEQUENCES, AND PROCEDURES FOR COORDINATING ALL PORTIONS OF THE WORK UNDER THE CONTRACT.

7. THE CONTRACTOR SHALL INSTALL ALL EQUIPMENT AND MATERIALS ACCORDING TO MANUFACTURER'S/VENDOR'S SPECIFICATIONS UNLESS NOTED OTHERWISE OR WHERE LOCAL CODES OR ORDINANCES TAKE PRECEDENCE.

8. ALL WORK PERFORMED ON THE PROJECT AND MATERIALS INSTALLED SHALL BE IN STRICT ACCORDANCE WITH ALL APPLICABLE CODES, REGULATIONS, AND ORDINANCES. CONTRACTOR SHALL GIVE ALL NOTICES AND COMPLY WITH ALL LAWS, ORDINANCES, RULES, REGULATIONS AND LAWFUL ORDERS OF ANY PUBLIC AUTHORITY, MUNICIPAL AND UTILITY COMPANY SPECIFICATIONS, AND LOCAL AND STATE JURISDICTIONAL CODES BEARING ON THE PERFORMANCE OF THE WORK.

9. GENERAL CONTRACTOR SHALL PROVIDE, AT THE PROJECT SITE, A FULL SET OF CONSTRUCTION DOCUMENTS UPDATED WITH THE LATEST REVISIONS AND ADDENDA OR CLARIFICATIONS FOR USE BY ALL PERSONNEL INVOLVED WITH THE PROJECT.

10. THE STRUCTURAL COMPONENTS OF ADJACENT CONSTRUCTION OR FACILITIES ARE NOT TO BE ALTERED BY THIS CONSTRUCTION PROJECT UNLESS NOTED OTHERWISE.

11. CONTRACTOR TO SEAL ALL PENETRATIONS THROUGH FIRE-RATED AREAS WITH U.L. LISTED OR FIRE MARSHALL APPROVED MATERIALS IF APPLICABLE TO THIS FACILITY AND OR PROJECT SITE.

12. CONTRACTOR TO PROVIDE A PORTABLE FIRE EXTINGUISHER WITH A RATING OF NOT LESS THAN 2-A OR 2-A10BC WITHIN 75 FEET TRAVEL DISTANCE TO ALL PORTIONS OF PROJECT AREA DURING CONSTRUCTION.

13. CONTRACTOR SHALL MEET ALL OSHA REQUIREMENTS FOR ALL INSTALLATIONS.

14. CONTRACTOR TO VERIFY LOCATION OF ALL BURIED UTILITIES PRIOR TO EXCAVATION.

15. CONTRACTOR SHALL MAKE NECESSARY PROVISIONS TO PROTECT EXISTING IMPROVEMENTS, EASEMENTS, PAVING, CURBING, ETC. DURING CONSTRUCTION, UPON COMPLETION OF WORK, CONTRACTOR SHALL REPAIR ANY DAMAGE THAT MAY HAVE OCCURRED DUE TO CONSTRUCTION ON OR ABOUT THE PROPERTY.

16. CONTRACTOR SHALL KEEP GENERAL WORK AREA CLEAN AND HAZARD FREE DURING CONSTRUCTION AND DISPOSE OF ALL DIRT, DEBRIS, AND RUBBISH. CONTRACTOR SHALL REMOVE EQUIPMENT NOT SPECIFIED AS REMAINING ON THE PROPERTY OR PREMISES. SITE SHALL BE LEFT IN CLEAN CONDITION DAILY AND FREE FROM PAINT SPOTS, DUST, OR SMUDGES OF ANY NATURE.

17. THE ARCHITECTS/ENGINEERS HAVE MADE EVERY EFFORT TO SET FORTH IN THE CONSTRUCTION AND CONTRACT DOCUMENTS THE COMPLETE SCOPE OF WORK. CONTRACTORS BIDDING THE JOB ARE NEVERTHELESS CAUTIONED THAT MINOR OMISSIONS OR ERRORS IN THE DRAWINGS AND OR SPECIFICATIONS SHALL NOT EXCUSE SAID CONTRACTOR FROM COMPLETING THE PROJECT AND IMPROVEMENTS IN ACCORDANCE WITH THE INTENT OF THESE DOCUMENTS. THE BIDDER SHALL BEAR THE RESPONSIBILITY OF NOTIFYING (IN WRITING) T-MOBILE OF ANY CONFLICTS, ERRORS, OR OMISSIONS PRIOR TO SUBMISSION OF CONTRACTOR'S PROPOSAL. IN THE EVENT OF DISCREPANCIES THE CONTRACTOR SHALL PRICE THE MORE COSTLY OR EXTENSIVE WORK, UNLESS DIRECTED OTHERWISE.

18. THE CONTRACTOR SHALL PERFORM WORK DURING OWNER'S PREFERRED HOURS TO AVOID DISTURBING NORMAL BUSINESS.

19. THE CONTRACTOR SHALL PROVIDE T-MOBILE CORPORATION PROPER INSURANCE CERTIFICATES NAMING T-MOBILE WEST, LLC AS ADDITIONAL INSURED, AND T-MOBILE WEST, LLC PROOF OF LICENSE(S) AND PL & PD INSURANCE.

CODE COMPLIANCE

ALL WORK AND MATERIALS SHALL BE PERFORMED AND INSTALLED IN ACCORDANCE WITH THE CURRENT CONDITIONS OF THE FOLLOWING CODES AS ADOPTED BY THE LOCAL GOVERNING AUTHORITIES. NOTHING IN THESE PLANS IS TO BE CONSTRUED TO PERMIT WORK NOT CONFORMING TO THESE CODES.

A. UTAH UNIFORM BUILDING STANDARD ACT RULES
B. 2011 NATIONAL ELECTRIC CODE (NEC)
C. 2009 INTERNATIONAL BUILDING CODE (IBC)
D. 2006 NATIONAL FIRE PROTECTION ASSOCIATION (NFPA 101)
E. 2009 INTERNATIONAL MECHANICAL CODE (IMC)
F. LOCAL BUILDING CODE
G. CITY OR COUNTY ORDINANCES

IMPORTANT NOTICE

THE EXISTING CONDITIONS REPRESENTED HEREIN ARE BASED ON VISUAL OBSERVATIONS AND INFORMATION PROVIDED BY OTHERS. STILLWATER MANAGEMENT CANNOT GUARANTEE THE CORRECTNESS NOR THE COMPLETENESS OF THE EXISTING CONDITIONS SHOWN AND ASSUMES NO RESPONSIBILITY THEREOF. THE CONTRACTOR SHALL VISIT THE SITE AND VERIFY ALL EXISTING CONDITIONS AS REQUIRED FOR PROPER COMPLETION OF THE PROJECT.

T-Mobile

LAND DESIGN & DEVELOPMENT

stillwater management

LICENSED PROFESSIONAL ENGINEER
No. 5213
JOHN C. GOEBEL
STATE OF UTAH
6/11/13

DATE: 5-10-2013
DRAWN BY: CJS (STILLWATER)
CHECKED BY: MATT HODGEN

REVISIONS

DATE	DESCRIPTION	INT.
5-10-13	PRELIM ZDs	CJS
5-14-13	FINAL ZDs	CJS
6-6-13	FINAL CDs	CJS

SL01122A
ALPINE SHEPHERD HILL
651 SOUTH BATEMAN LANE
ALPINE, UT 84004

DRAWING TITLE: GENERAL NOTES

DRAWING NO.: N-1

EXISTING EQUIPMENT SITE PLAN

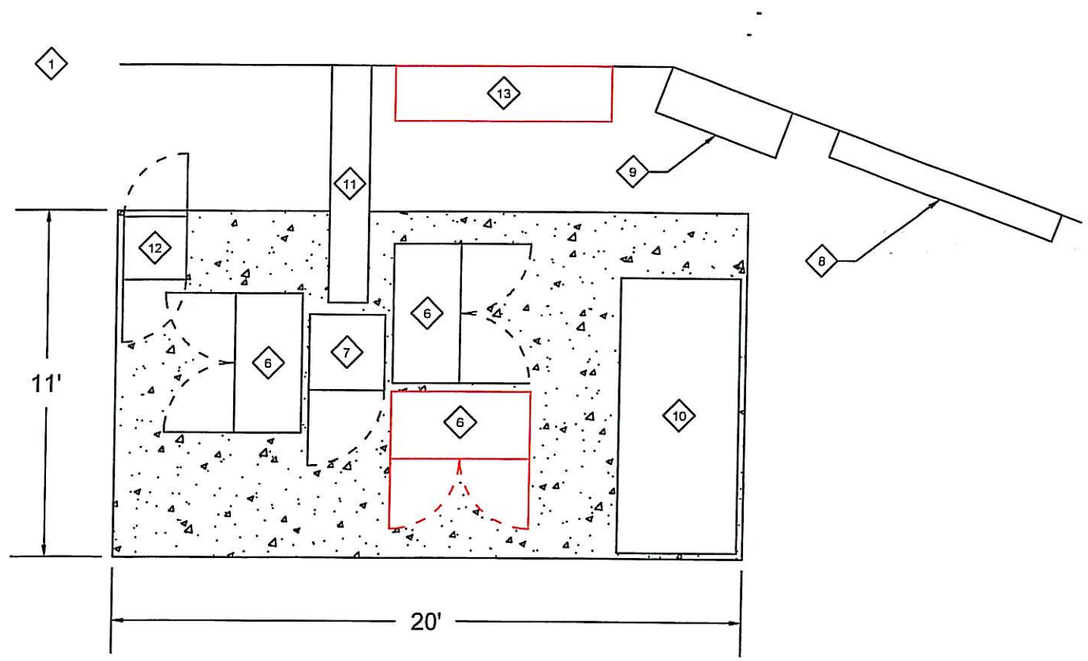

KEY NOTES

1. T-MOBILE LEASE AREA
2. EXISTING MONNOPOLE
3. SIX (6) PROPOSED ERICSSON AIR 21 ANTENNAS
4. SIX (6) EXISTING ANTENNAS (TO BE REMOVED)
5. PROPOSED ERICSSON RBS 3106 CABINET
6. THREE (3) NORTEL 2G CABINETS (ONE TO BE REMOVED)
7. DOGHOUSE
8. POWER EQUIPMENT MOUNTED ON WALL
9. TELCO EQUIPMENT MOUNTED ON WALL
10. GENERATOR
11. ICE BRIDGE
12. BATTERY CABINET
13. ERICSSON RBS 3518 EQUIPMENT MOUNTED TO WALL (TO BE REMOVED)

T-Mobile

LAND DESIGN DEVELOPMENT LLC

stillwater management

LICENSED PROFESSIONAL ENGINEER
No. 8213
JOHN C. GOEBEL
STATE OF UTAH
6/11/13

DATE: 5-10-2013	
DRAWN BY: CJS (STILLWATER)	
CHECKED BY: MATT HODGEN	

REVISIONS

DATE	DESCRIPTION	INT.
5-10-13	PRELIM ZDs	CJS
5-14-13	FINAL ZDs	CJS
6-6-13	FINAL CDs	CJS

PROPOSED EQUIPMENT SITE PLAN

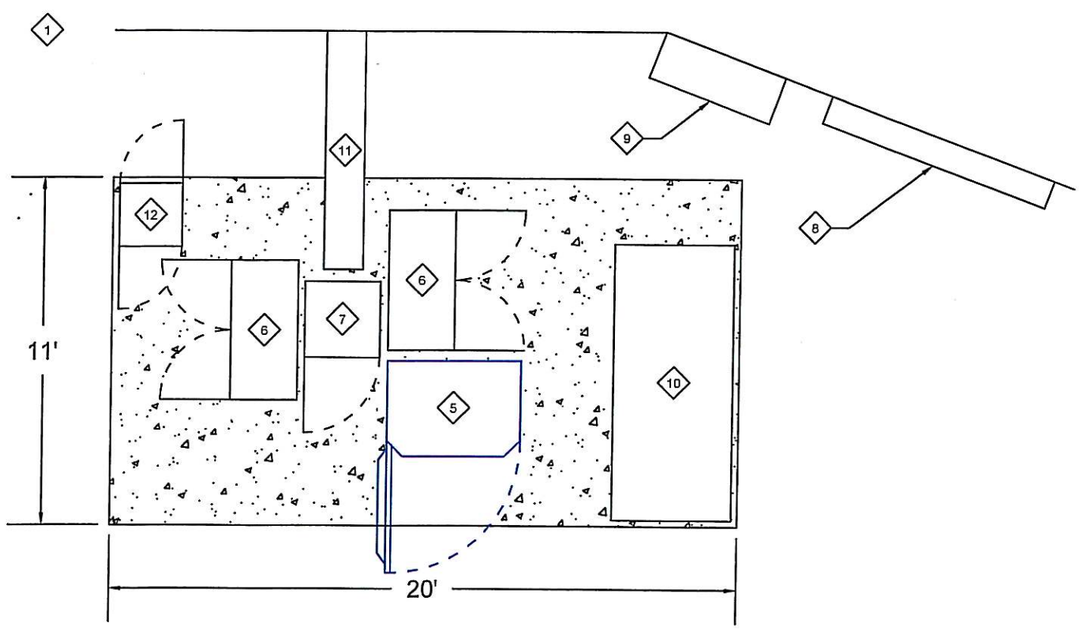

SITE NOTES

SL01122A
ALPINE SHEPHERD HILL
651 SOUTH BATEMAN LANE
ALPINE, UT 84004

DRAWING TITLE: EQUIPMENT SITE PLAN

DRAWING NO.: A-2

EXISTING TOWER ELEVATION

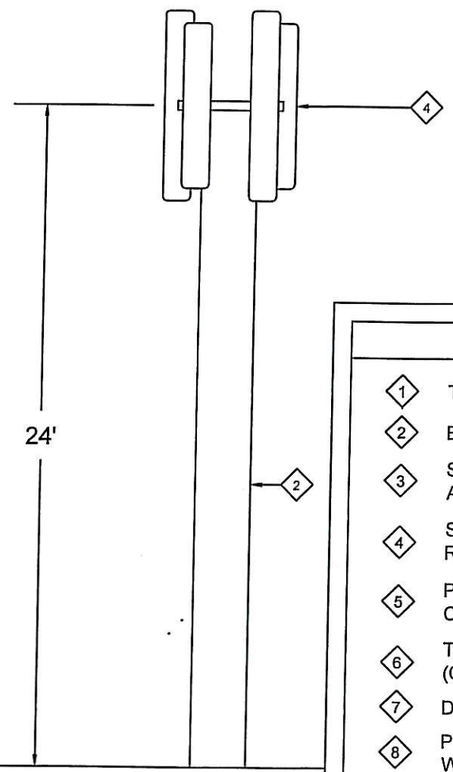

PROPOSED TOWER ELEVATION

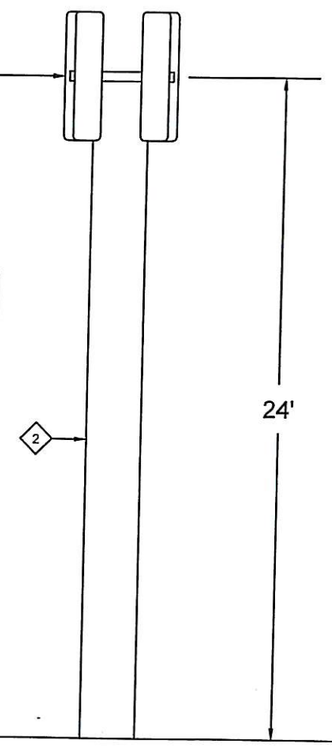

KEY NOTES

1. T-MOBILE LEASE AREA
2. EXISTING MONNOPOLE
3. SIX (6) PROPOSED ERICSSON AIR 21 ANTENNAS
4. SIX (6) EXISTING ANTENNAS (TO BE REMOVED)
5. PROPOSED ERICSSON RBS 3106 CABINET
6. THREE (3) NORTEL 2G CABINETS (ONE TO BE REMOVED)
7. DOGHOUSE
8. POWER EQUIPMENT MOUNTED ON WALL
9. TELCO EQUIPMENT MOUNTED ON WALL
10. GENERATOR
11. ICE BRIDGE
12. BATTERY CABINET
13. ERICSSON RBS 3518 EQUIPMENT MOUNTED TO WALL (TO BE REMOVED)

EXISTING ANTENNA LAYOUT

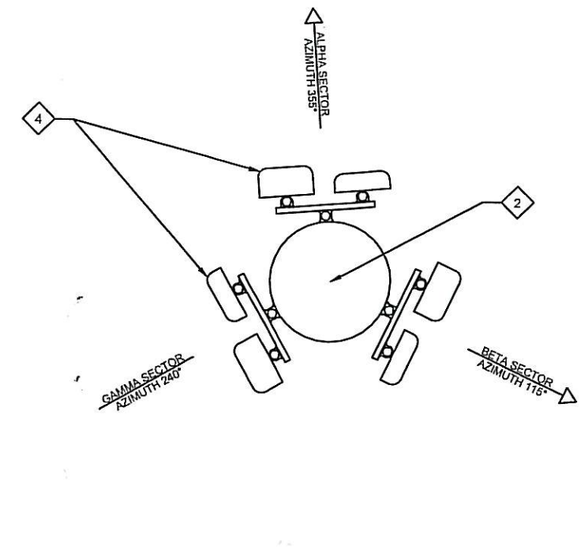

PROPOSED ANTENNA LAYOUT

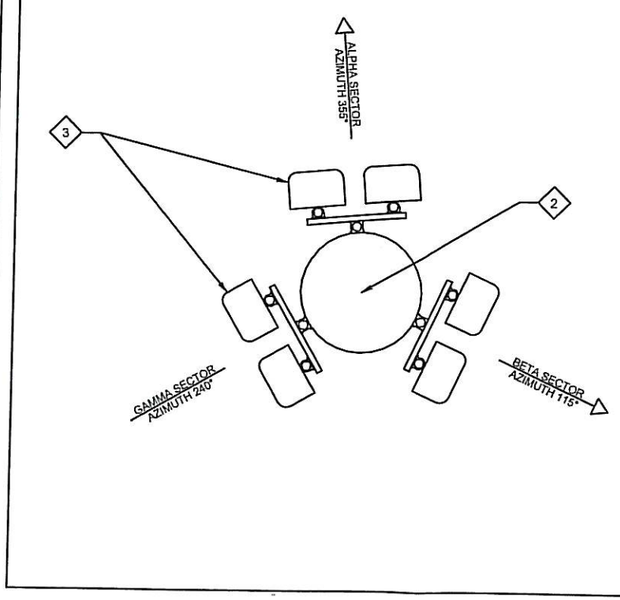

T-Mobile

LAND DESIGN & DEVELOPMENT

stillwater management

LICENSED PROFESSIONAL ENGINEER
No. 5213
JOHN C. GUEBEL
STATE OF UTAH
6/11/13

DATE: 5-10-2013
DRAWN BY: CJS (STILLWATER)
CHECKED BY: MATT HODGEN

REVISIONS

DATE	DESCRIPTION	INT.
5-10-13	PRELIM ZDs	CJS
5-14-13	FINAL ZDs	CJS
6-6-13	FINAL CDs	CJS

SL01122A
ALPINE SHEPHERD HILL
651 SOUTH BATEMAN LANE
ALPINE, UT 84004

DRAWING TITLE: TOWER ELEVATION AND PLAN

DRAWING NO.: A-3

ANTENNA DETAIL 1

EMS DUAL PORT ANTENNA

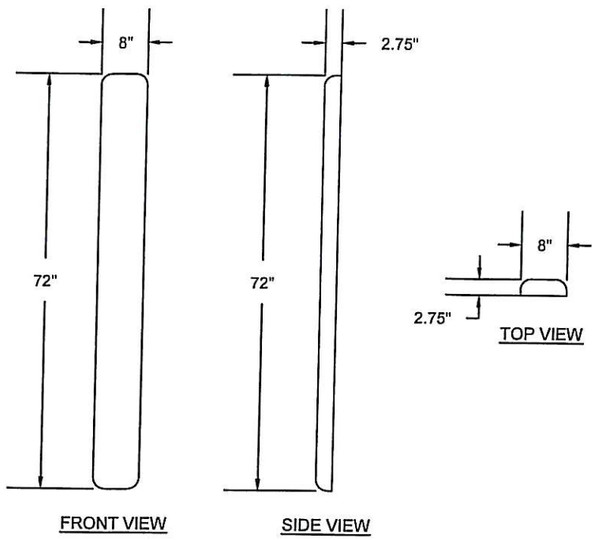

EXISTING - TO BE REMOVED

ANTENNA DETAIL 2

ANDREW TMBXX-6517-R2M

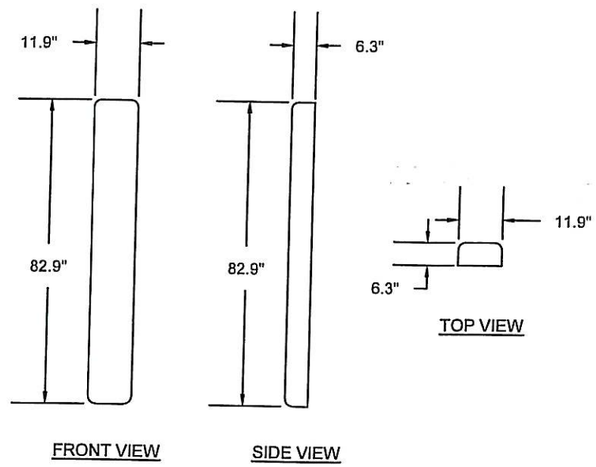

EXISTING - TO BE REMOVED

ANTENNA DETAIL 3

ERICSSON AIR 21

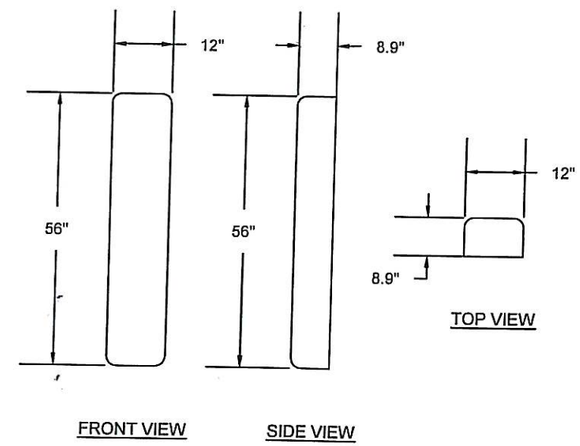

PROPOSED - TO BE INSTALLED

ANTENNA MOUNT DETAIL

MECHANICAL TILT PIPE MOUNT

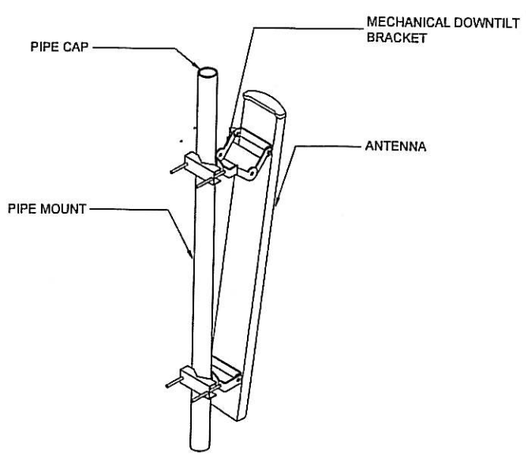

EXISTING - TO REMAIN

CABINET DETAIL 1

ERICSSON RBS 3106

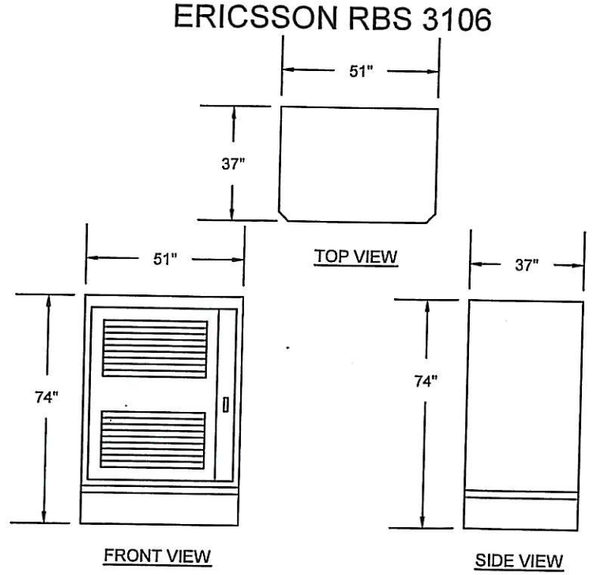

PROPOSED - TO BE INSTALLED

CABINET DETAIL 2

NORTEL 2G CABINET

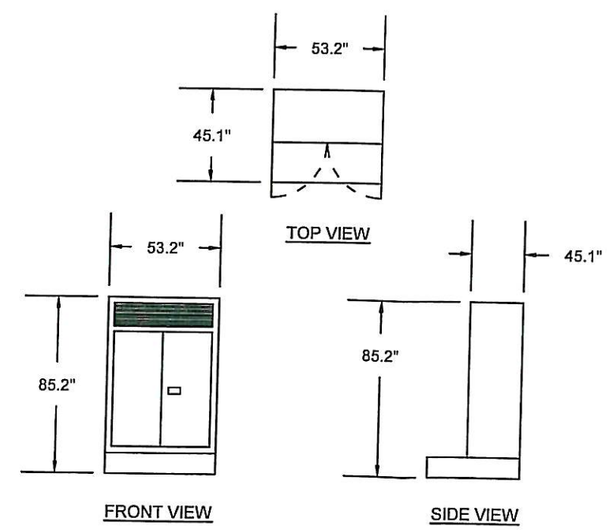

EXISTING - TW0 (2) TO REMAIN,
ONE (1) TO BE REMOVED

T-Mobile

LAND DESIGN & DEVELOPMENT

stillwater management

LICENSED PROFESSIONAL ENGINEER
No. 5213
JOHN C. GOEBEL
STATE OF UTAH
6/11/13

DATE: 5-10-2013	
DRAWN BY: CJS (STILLWATER)	
CHECKED BY: MATT HODGEN	

REVISIONS

DATE	DESCRIPTION	INT.
5-10-13	PRELIM ZDs	CJS
5-14-13	FINAL ZDs	CJS
6-6-13	FINAL CDs	CJS

SL01122A
ALPINE SHEPHERD HILL
651 SOUTH BATEMAN LANE
ALPINE, UT 84004

DRAWING TITLE: EQUIPMENT DETAIL

DRAWING NO.: E-1

GROUNDING PLAN

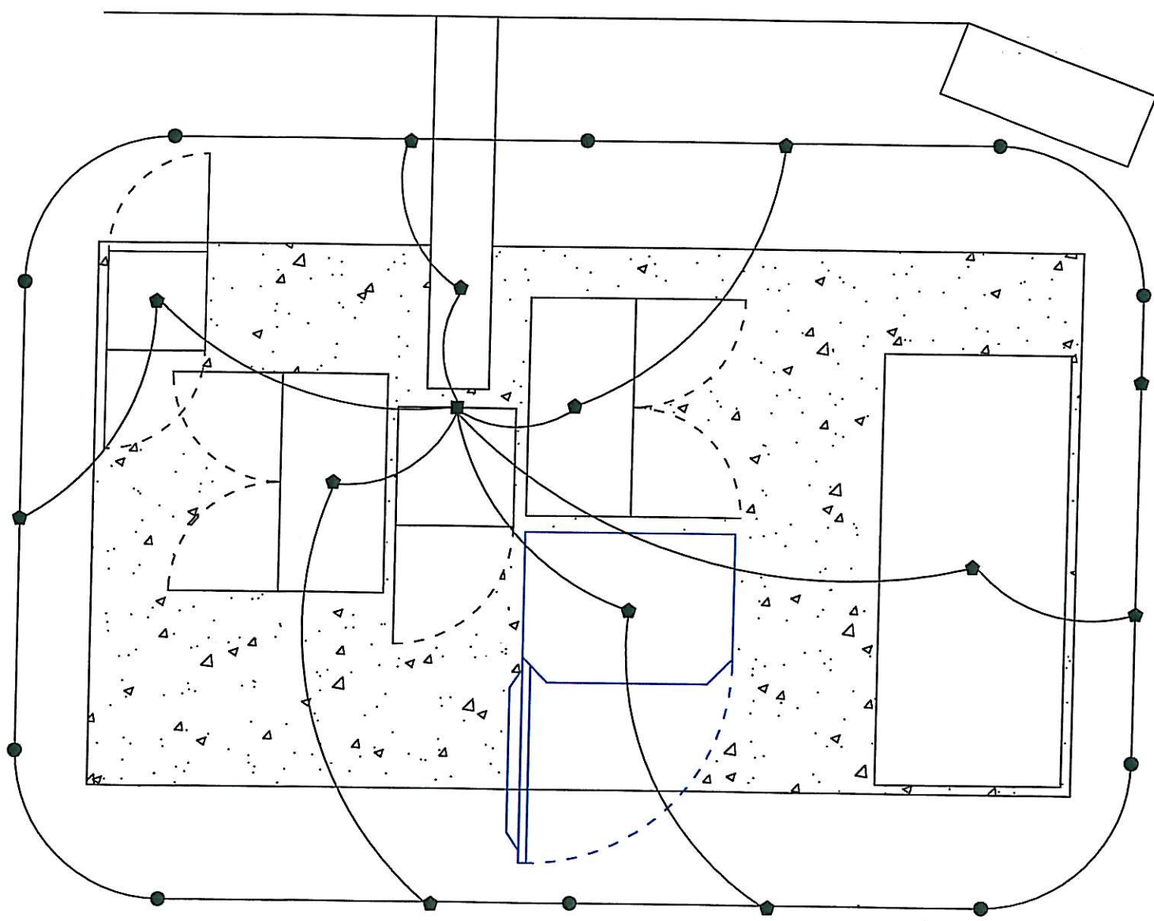

NOTE: TYPICAL GROUNDING PLAN SHOWN. CONTRACTOR TO TIE ANY NEW EQUIPMENT INTO EXISTING GROUNDING PLAN AT A MINIMUM OF TWO CONNECTIONS

GROUNDING NOTES

1. ALL SAFETY GROUNDING OF THE ELECTRICAL EQUIPMENT SHALL BE CARRIED OUT IN ACCORDANCE WITH THE CURRENT REVISION OF NEC.
2. ALL DETAILS ARE SHOWN IN GENERAL TERMS. ACTUAL INSTALLATION AND SITE CONSTRUCTION MAY VARY DUE TO SITE SPECIFIC CONDITIONS. IF SITE SOIL CONDITIONS ARE CORROSIVE, USE OF A LARGER MAIN GROUND RING CONDUCTOR MAY BE NECESSARY.
3. GROUND ALL ANTENNA BASES, FRAMES, CABLE RUNS, AND OTHER METALLIC COMPONENTS USING GROUND WIRES AND CONNECT TO SURFACE MOUNTED BUS BARS. FOLLOW ANTENNA AND BTS MANUFACTURERS PRACTICES FOR GROUNDING REQUIREMENTS. GROUND COAX SHIELD AT BOTH ENDS AND EXIT FROM TOWER OR MONOPOLE USING MANUFACTURERS PRACTICES.
4. ALL GROUND CONNECTIONS SHALL BE CADWELD. ALL WIRES SHALL BE COPPER THHN/THWN. ALL GROUND WIRE SHALL BE SOLID COPPER WITH GREEN INSULATED WIRE ABOVE GROUND.
5. CONTRACTOR TO VERIFY AND TEST GROUND TO SOURCE TO A MAXIMUM OF 5 OHMS. IF GROUND TEST DID NOT ACHIEVE THE MAXIMUM 5 OHMS, CONTRACTOR SHALL BE RESPONSIBLE TO PROVIDE ADDITIONAL GROUNDING TO OHM MAX REQUIREMENT. GROUNDING AND OTHER OPERATIONAL TESTING WILL BE WITNESSED BY A T-MOBILE REPRESENTATIVE.
6. ELECTRICAL CONTRACTOR TO PROVIDE DETAILED DESIGN OF GROUNDING SYSTEM, AND RECEIVE APPROVAL OF DESIGN BY AN AUTHORIZED T-MOBILE REPRESENTATIVE, PRIOR TO INSTALLATION OF GROUNDING SYSTEM.
7. NOTIFY T-MOBILE IF THERE ARE ANY DIFFICULTIES INSTALLING GROUND SYSTEM DUE TO SITE SOIL CONDITIONS.
8. IF SURGE SUPPRESSER IS AN EXTERIOR MOUNT, RUN A #2 THHN GROUND WIRE IN A 1" SCHED. 40 PVC CONDUIT TO SIDE SPLICE CADWELD AT GROUND RING. HEAT RADIUS CONDUIT TO PRODUCE LARGE RADIUS BENDS. STRAP TO SLAB AT A MINIMUM OF TWO POINTS.
9. ALL GROUNDING WIRE RUNS AND CONNECTIONS, BOTH ABOVE AND BELOW GRADE, SHALL BE LOCATED INSIDE OF THE LEASE AREA.
10. TIE NEW GROUNDING INTO EXISTING GROUND GRID IN AT LEAST TWO LOCATIONS.
11. THE INFORMATION CONTAINED IN THIS SET OF CONSTRUCTION DOCUMENTS IS PROPRIETARY BY NATURE. ANY USE OR DISCLOSURE OTHER THAN THAT WHICH RELATES TO T-MOBILE SERVICES IS STRICTLY PROHIBITED.

SYMBOL KEY

- MECHANICAL CONNECTION
- COPPER GROUND ROD
- CADWELD CONNECTION
- GROUND BAR

T-Mobile

LAND DESIGN & DEVELOPMENT, LLC

stillwater management

LICENSED PROFESSIONAL ENGINEER
6/11/13
No. 5213
JOHN C. GUEBEL
STATE OF UTAH

DATE: 5-10-2013	
DRAWN BY: CJS (STILLWATER)	
CHECKED BY: MATT HODGEN	

REVISIONS

DATE	DESCRIPTION	INT.
5-10-13	PRELIM ZDs	CJS
5-14-13	FINAL ZDs	CJS
6-6-13	FINAL CDs	CJS

SL01122A
ALPINE SHEPHERD HILL
651 SOUTH BATEMAN LANE
ALPINE, UT 84004

DRAWING TITLE: GROUNDING PLAN

DRAWING NO.: E-2

TYPICAL GROUNDING DETAIL

1

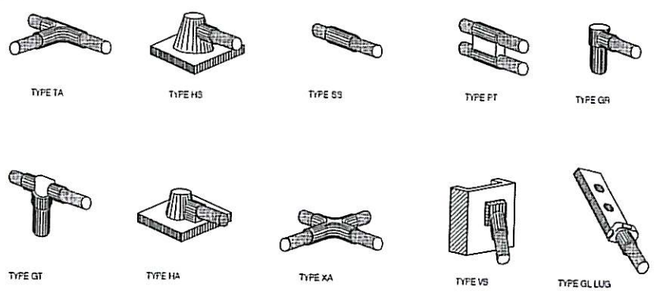

NOTE: CADWELD "TYPES" SHOWN ARE EXAMPLES - CONSULT WITH PROJECT MANAGER FOR SPECIFIC TYPES OF CADWELDS TO BE USED FOR THIS PROJECT

CADWELD DETAILS

2

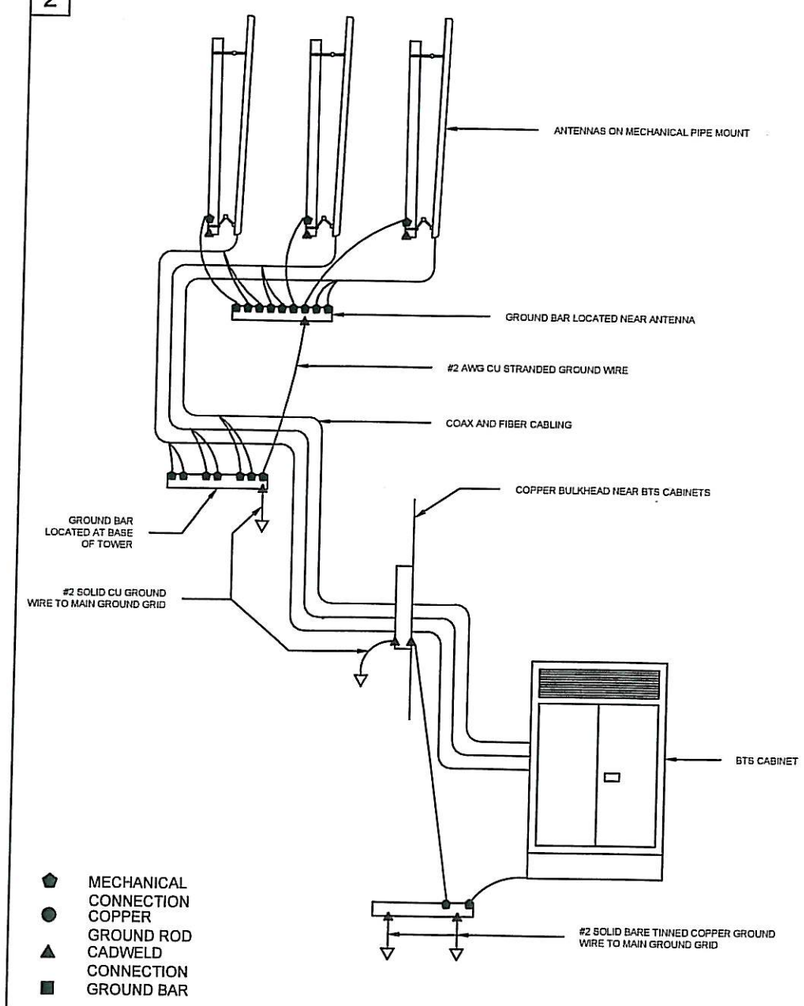

ANTENNA GROUNDING DIAGRAM

3

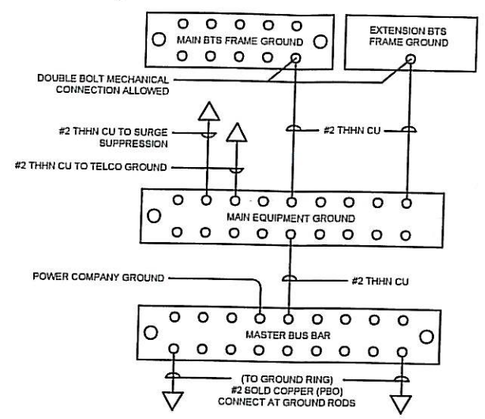

GROUNDING SCHEMATIC

4

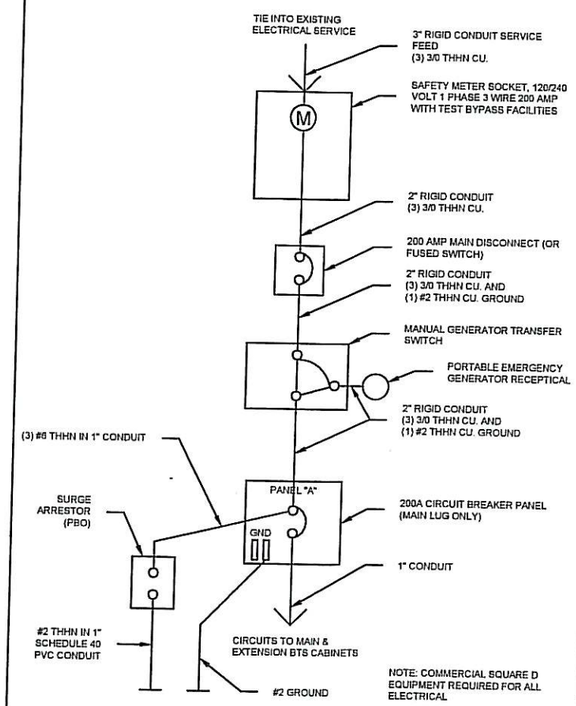

NOTE: COMMERCIAL SQUARE D EQUIPMENT REQUIRED FOR ALL ELECTRICAL

200 AMP POWER ONE-LINE DIAGRAM

5

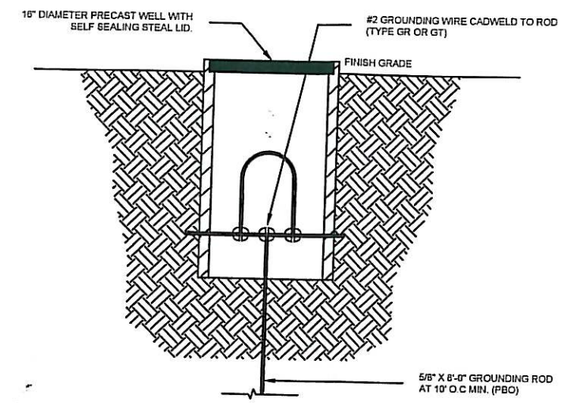

INSPECTION WELL DETAIL

6

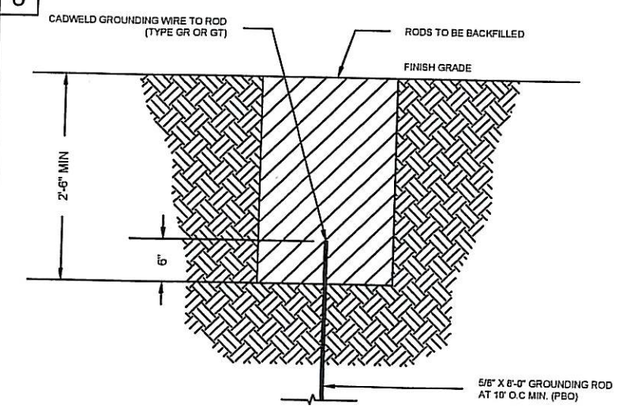

GROUNDING ROD DETAIL

7

1. PERFORM DETAILED VERIFICATION OF WORK PRIOR TO ORDERING THE ELECTRICAL EQUIPMENT AND COMMENCING CONSTRUCTION. NOTIFY T-MOBILE OF ANY DISCREPANCIES.

2. PRIOR TO BEGINNING WORK, COORDINATE ALL POWER AND TELCO WORK WITH THE LOCAL UTILITY COMPANY AS IT MAY APPLY TO THIS SITE. ALL WORK TO COMPLY WITH THE RULES AND REGULATIONS OF THE UTILITIES INVOLVED.

3. RUN TELEPHONE FROM EXISTING PEDESTAL OR TELEPHONE BOARD TO PPC LOCATION. CONTRACTOR SHALL FIELD VERIFY EXACT ROUTING OF POWER AND TELCO. FOLLOW ALL APPLICABLE LOCAL CODES AND UTILITY REQUIREMENTS.

4. FABRICATION AND INSTALLATION OF THE COMPLETE ELECTRICAL SYSTEM SHALL BE DONE IN A FIRST CLASS WORKMANSHIP BY QUALIFIED PERSONNEL EXPERIENCED IN SUCH WORK.

5. PROVIDE 4" CONDUIT EQUIPPED WITH ONE PULL STRING AND ONE1" INNERDUCT. ALL TELEPHONE CONDUITS AND TELEPHONE WIRING MUST MAINTAIN A MINIMUM SEPARATION DISTANCE OF 18" AWAY FROM ALL A/c POWER CONDUITS AND WIRING.

6. CONTRACTOR TO PROVIDE 1" CONDUIT FOR POWER ROUTING TO BTS.

7. ALL ELECTRICAL WORK SHALL CONFORM TO THE EDITION OF THE NEC ACCEPTED BY THE LOCAL JURISDICTION AND TO THE APPLICABLE LOCAL CODES AND REGULATIONS.

8. SCHEDULE THE WORK IN AN ORDERLY MANNER SO AS NOT TO IMPEDE PROGRESS OF THE PROJECT.

9. CONTRACTOR TO VERIFY AZIMUTHS WITH FINAL RF DATA SHEET FROM RF ENGINEER.

ELECTRICAL/TELEPHONE/SITE NOTES

T-Mobile

LAND DESIGN & DEVELOPMENT LLC

stillwater management

LICENSED PROFESSIONAL ENGINEER No. 5213 JOHN C. GOEBEL STATE OF UTAH 6/11/13

DATE: 5-10-2013	
DRAWN BY: CJS (STILLWATER)	
CHECKED BY: MATT HODGEN	

REVISIONS

DATE	DESCRIPTION	INT.
5-10-13	PRELIM ZDs	CJS
5-14-13	FINAL ZDs	CJS
6-6-13	FINAL CDs	CJS

SL01122A
ALPINE SHEPHERD HILL
651 SOUTH BATEMAN LANE
ALPINE, UT 84004

DRAWING TITLE: POWER, TELEPHONE, GROUNDING

DRAWING NO.: E-3

SWEEP TEST PROCEDURE

THE FOLLOWING DESCRIBES THE TEST AND FAULT FINDING PROCEDURE FOR ALL ANTENNAS:

1. TEST EQUIPMENT SHOULD CONSIST OF A SWEEP OSCILLATOR SET TO RUN BETWEEN 1800 AND 2000 MHZ, DIRECTIONAL COUPLER WITH AT LEAST 35 DB DIRECTIVITY AND SCALAR NETWORK ANALYZER WITH RESOLUTION OF BETTER THAN 0.2 DB. A MATCHED 50 OHM LOAD AND SHORT CIRCUIT TERMINATION ARE ALSO REQUIRED.

2. SET UP THE RETURN LOSS MEASURING SET AS PER THE MANUFACTURERS' INSTRUCTIONS AND CALIBRATE WITH THE SHORT (ODB RETURN LOSS VSWR = INFINITY).

3. INFORM T-MOBILE OPERATIONS PERSONNEL AT THE SWITCH THAT SWEEP TESTS ARE TO BEGIN AT THIS SITE SO THEY CAN DISABLE TRANSMISSION TO AVOID POTENTIAL TRX DAMAGE WITH THE ANTENNA PORT OPEN.

4. COMPOSITE RETURN LOSS: DISCONNECT THE BOTTOM JUMPER AT THE BTS AND CONNECT IT TO THE MAIN PORT OF THE BRIDGE. RETURN LOSS OF THE COMPOSITE JUMPERS, FEEDER AND ANTENNA SHOULD BE < 1.4DB (VSWR > 1.5:1) BETWEEN 1800 AND 2000 MHZ.

5. FEEDER RETURN LOSS: TURN OFF THE SWEEP GENERATOR, DISCONNECT THE TOP JUMPER AT THE ANTENNA AND CONNECT A DUMMY LOAD TO THE END OF THE JUMPER WITH A DIN - N ADAPTER. POWER UP THE GENERATOR AND MEASURE THE RETURN LOSS LOOKING INTO THE BOTTOM JUMPER. THE RETURN LOSS SHOULD NOT EXCEED 1.8DB (VSWR > 1.3:A) BETWEEN 1800 AND 2000 MHZ.

6. FEEDER INSERTION LOSS: REPLACE THE LOAD WITH A SHORT CIRCUIT TERMINATION AND MEASURE THE MAXIMUM AND MINIMUM RETURN LOSS BETWEEN 1800 AND 2000 MHZ. ADD THESE TOGETHER AND DIVIDE BY 4 TO GIVE THE AVERAGE ONE-WAY INSERTION LOSS WHICH SHOULD NE < 3 DB.

7. IF THE CONDITIONS IN 4, 5 AND 6 ARE MET, THE TEST IS COMPLETE. IF ITEM 4 FAILED BUT 5 AND 6 PASSED, REPLACE THE ANTENNA AND RETEST. IF ITEMS 5 OR 6 FAILED, MEASURE RETURN LOSS OF MAIN FEEDER ONLY. IF RETURN LOSS IMPROVES TO -20 OR BETTER OR INSERTION LOSS IMPROVES BY MORE THAN 2DB, REPLACE OR RETERMINATE THE BOTTOM AND TOP JUMPER. OTHERWISE, REPLACE THE MAIN FEEDER. NOTIFY T-MOBILE OF ANY FAULTY HARDWARE.

ALL TEST RESULTS SHOULD BE CLEARLY MARKED WITH SITE, FEEDER NUMBER, DATE AND MEASUREMENT TIME.

CABLING IDENTIFICATION

THE FOLLOWING DESCRIBES THE PROCEDURE FOR MARKING AND IDENTIFYING ANTENNA CABLING:

1. LOCATION: MARKINGS SHALL BE MADE BY USE OF 3M COLORED, TWO-INCH WIDE TAPE AFFIXED AT TYPICALLY FOUR PLACES ON THE CABLE RUN AS FOLLOWS:

   A) ON THE COAX AT THE CONNECTOR NEAREST THE ANTENNA WHERE THE COAX AND JUMPER ARE CONNECTED.
   B) AT THE BASE OF THE TOWER STRUCTURE (FOR TOWERS ONLY).
   C) AT A POINT OUTSIDE THE BTS.
   D) AT CONNECTION POINT INSIDE THE BTS

2. SECTOR IDENTIFICATION: A SITE CAN HAVE MULTIPLE SECTORS. SECTORS SHALL BE DESIGNATED BY NUMBERING EACH IN A CLOCKWISE MANNER (THE FIRST SECTOR IS THE ONE CLOSEST TO ZERO DEGREES, OR NORTH).

   A) SECTOR #1 COAX WILL HAVE ONE BAND OF RED COLORED TAPE.
   B) SECTOR #2 COAX WILL HAVE ONE BAND OF WHITE COLORED TAPE.
   C) SECTOR #3 COAX WILL HAVE ONE BAND OF BLUE COLORED TAPE.

3. FOR MORE THAN ONE ANTENNA PER SITE THE FOLLOWING WILL BE ADHERED TO:

   FACING THE BACK OF THE ANTENNA, STARTING FROM YOUR LEFT ANTENNA, MARK IT WITH ONE BAND, MOVING RIGHT ON THE SAME SECTOR TO THE NEXT ANTENNA, MARK IT WITH TWO BANDS OF COLORED TAPE. CONTINUE WITH THE SAME METHOD FOR AS MANY ANTENNAS YOU HAVE FOR EACH SECTOR. REPEAT THIS FOR EVERY SECTOR.

4. IN ADDITION TO THE COLORED TAPE APPLY PERMANENT MARKINGS AS FOLLOWS:

   ONE-INCH BRASS ROUND TAGS MARKED WITH PRINCIPAL 1 (P1), PRINCIPAL 2 (P2), PRINCIPAL 3 (P3), DIVERSITY 1 (D1), DIVERSITY 2 (D2), AND DIVERSITY 3 (D3) TO BE ATTACHED BY A FOURTEEN (14) GAUGE BLACK ELECTRICAL WIRE.

TYPICAL GROUNDING SYSTEM NOTES

1. TOWER RADIAL GROUND:
   #2 SOLID COPPER WIRE CADWELDED (OR FASTENER APPROVED BY PROJECT MANAGER) TO TOWER BASE. EXTEND WIRE 30' MINIMUM IN SWEEPING CONFIGURATION AT A MINIMUM DEPTH OF 24". ALL GROUND RODS TO BE 8' COPPER OR COPPER CLAD. FIRST GROUND RODS FROM TOWER ARE TO BE PLACED 10' EQUAL DISTANCE (BETWEEN ROD CENTERS) AND A MINIMUM OF EVERY 10' ALONG TOTAL LENGTH. ALL BENDS MUST MAINTAIN A MINIMUM 12" RADIUS.

2. TOWER EQUIPMENT RING GROUND INTERCONNECT:
   ONLY ONE CONNECTION OF THIS TYPE FOR EACH TOWER. SAME CONSTRUCTION AS NOTE 1 ABOVE EXCEPT THE TERMINATION AT THE GROUNDING RING MUST BE THREE-WAY CONNECTED. ALL BENDS MUST MAINTAIN A MINIMUM 12" RADIUS.

3. EQUIPMENT BUILDING RING GROUND:
   ALWAYS OBSERVE THE TURN DIRECTIONS SHOWN WHEN PLACING BENDS OR CONNECTIONS. USE #2 SOLID COPPER WIRE PLACED WITHIN 3' (+/- 6") FROM EDGE OF BUILDING CONCRETE FOUNDATION AT A MINIMUM DEPTH OF 24". ALL CONNECTIONS TO GROUND RING ARE TO BE CADWELDED. ALL GROUND RODS TO BE 10' COPPER OR COPPER CLAD AND PLACED 10' EQUAL DISTANCE (BETWEEN ROD CENTERS) AND A MINIMUM OF EVERY 10' ALONG TOTAL LENGTH. ALL BENDS MUST MAINTAIN A MINIMUM 12" RADIUS.

4. SINGLE POINT GROUND BAR (COAX BULKHEAD):
   ALWAYS OBSERVE THE DIRECTIONS SHOWN WHEN PLACING BENDS OR CONNECTIONS TO GROUND RING. USE TWO #2 SOLID COPPER WIRE OR TWO 3" COPPER RIBBONS ATTACHED ON OPPOSITE ENDS OF BAR OR BULKHEAD EXTENDING DIRECTLY TO GROUND. ALL WIRE CONNECTIONS TO GROUND RING ARE TO BE CADWELDED, RIBBONS MAY BE ATTACHED TO GROUND RING WITH A "LISTED" PRESSURE CONNECTION WITH APPROVAL OF CONSTRUCTION MANAGER. ALL BENDS MUST MAINTAIN A MINIMUM 12" RADIUS.

5. EQUIPMENT SHELTER INNER BONDING RING:
   #2 SOLID COPPER WIRE CADWELDED (TO INNER BONDING RING AT A LOCATION EITHER ABOVE THE SOIL LINE OR JUST INSIDE INTERIOR OF BUILDING. ALWAYS USE PVC (NONMETALLIC) SLEEVES WHEN ENTERING THE STRUCTURE. THIS TYPE OF BOND IS REQUIRED AT EACH OUTSIDE CORNER AND AT DISTANCES NOT TO EXCEED 50' ALONG ANY STRAIGHT WALL. ALL BENDS MUST MAINTAIN A MINIMUM 12" RADIUS.

6. FENCE EQUALIZATION BOND:
   #2 SOLID COPPER WIRE CADWELDED TO BUILDING RING GROUND AND ATTACHED TO EACH INSIDE OR OUTSIDE CORNER FENCE POST AND/OR GATE POST WITH A "LISTED" WIRE CLAMP. PLACE AT A MINIMUM 12" DEPTH (SEE NOTE 11 BELOW FOR CROSSING CLEARANCES). IF METALLIC POST IS NOT SET IN CEMENT, PLACE AN ADDITIONAL 8' GROUND ROD AT POST LOCATION.

7. GATE EQUALIZATION BOND:
   #2 SOLID COPPER WIRE CADWELDED TO FENCE EQUALIZATION WIRE AND ATTACHED TO EACH GATE POST WITH A "LISTED" WIRE CLAMP. IF METALLIC POST IS NOT SET IN CEMENT, PLACE AN ADDITIONAL 10' GROUND ROD AT EACH POST LOCATION.

8. POWER / TELEPHONE TRENCH:
   UTILITIES CAN EITHER BE PLACED IN SAME TRENCH (NESC RANDOM SEPARATION) OR IN SEPARATE TRENCH AT A 36" DEPTH. ALWAYS PLACE THESE FACILITIES BELOW WHILE MAINTAINING A 36" HORIZONTAL SEPARATION AND A 12" VERTICAL SEPARATION FROM ANY RADIAL OR RING GROUND SYSTEMS IN, ON, OR ADJACENT TO THE RADIO SITE.

9. POWER / TELEPHONE ENTRANCE:
   THE BUILDING RING GROUND MEETS OR EXCEEDS THE NEC ARTICLE 250 UTILITY PROTECTION GROUND. THEREFORE, INFORM LOCAL INSPECTOR THAT ADDITIONAL GROUND RODS ARE NOT REQUIRED. ALL UTILITY GROUNDS MAY BE ATTACHED TO THE #2 SOLID COPPER WIRE DETAILED IN NOTE 10 BELOW. IF LOCAL POWER COMPANY CODES REQUIRE AN ADDITIONAL GROUND ROD, BOND THE TWO FACILITIES TOGETHER AT THIS LOCATION.

10. UTILITY GROUNDING ELECTRODE BOND:
    USE #2 SOLID COPPER WIRE PLACED WITHIN 3' OF UTILITY ENTRANCE AT DEMARCATION CABINET ENTRY PORT. ALL CONNECTIONS TO GROUND RING ARE TO BE CADWELDED. CONNECTION TO DEMARCATION CABINET ENTRY PORT TO BE WITH A "LISTED" CONNECTION. ALL BENDS MUST MAINTAIN A MINIMUM 12" RADIUS.

11. RADIAL GROUND / FENCE BOND CROSSINGS:
    WHEREVER PRACTICAL, TO REDUCE MAGNETIC COUPLING, THESE FACILITIES MUST CROSS AT A 90 DEGREE ANGLE WHILE MAINTAINING 18" VERTICAL SEPARATION.

12. COAX GROUNDING KITS:
    USE INDIVIDUAL "LISTED" GROUNDING KITS FOR EACH COAX CABLE. BOND TO TOWER BONDING BUSS BAR WITH #2 THHN SOLID COPPER WIRE WITH 2 HOLE CRIMPED CONNECTIONS.

13. GROUNDING BUSS BAR KIT:
    THE GROUNDING BUSS BAR AND ATTACHMENT KIT MUST BE DIRECTLY BOLTED TO THE TOWER STRUCTURE WITHOUT ELECTRICAL INSULATORS.

14. ICE BRIDE BONDING:
    THE ICE BRIDGE SHOULD NOT BE BONDED TO THE TOWER STRUCTURE. IT SHOULD ONLY BE BONDED AT ONE END TO THE ENTRANCE BULKHEAD (SINGLE POINT GROUND BAR). USE #2 THHN SOLID COPPER WIRE WITH 2 HOLE CRIMPED CONNECTIONS.

15. RADIO BAY TO COAX BULKHEAD BOND:
    THIS IS THE ONLY CABINET TO GROUND BOND WIRE ATTACHED TO THE RADIO BAY. USE #2 THHN SOLID COPPER WIRE WITH 2 HOLE CRIMPED CONNECTIONS OR A 3" COPPER STRAP.

16. RADIO BAY ISOLATION KIT:
    CONTACT RADIO EQUIPMENT SUPPLIER FOR SPECIFICATION AND INSTALLATION PROCEDURES.

T-Mobile

LAND DESIGN & DEVELOPMENT

stillwater management

LICENSED PROFESSIONAL ENGINEER
6/11/13
No. 5213
JOHN C. GOEBEL
STATE OF UTAH

DATE: 5-10-2013	
DRAWN BY: CJS (STILLWATER)	
CHECKED BY: MATT HODGEN	

REVISIONS

DATE	DESCRIPTION	INT.
5-10-13	PRELIM ZDs	CJS
5-14-13	FINAL ZDs	CJS
6-6-13	FINAL CDs	CJS

SL01122A
ALPINE SHEPHERD HILL
651 SOUTH BATEMAN LANE
ALPINE, UT 84004

DRAWING TITLE: SITE NOTES

DRAWING NO.: E-4

ANTENNA DIAGRAM

Site Configuration 2C – AIR Based with RBS3106

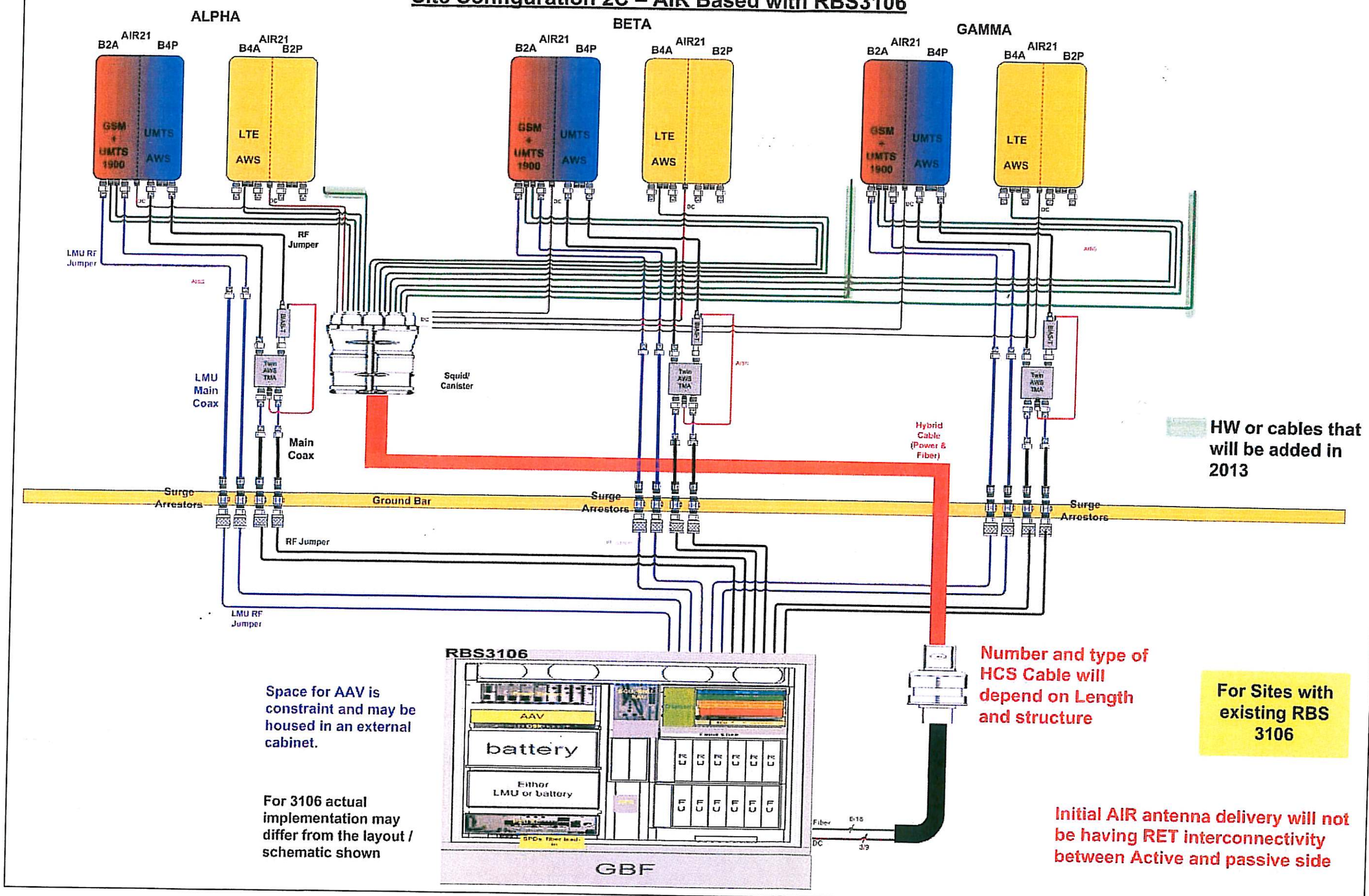

T-Mobile

LAND DESIGN & DEVELOPMENT, LLC

stillwater management

LICENSED PROFESSIONAL ENGINEER
6/11/13
No. 5213
JOHN C. GUEBEL
STATE OF UTAH

DATE: 5-10-2013	
DRAWN BY: CJS (STILLWATER)	
CHECKED BY: MATT HODGEN	
REVISIONS	

DATE	DESCRIPTION	INT.
5-10-13	PRELIM ZDs	CJS
5-14-13	FINAL ZDs	CJS
6-6-13	FINAL CDs	CJS

SL01122A
ALPINE SHEPHERD HILL
651 SOUTH BATEMAN LANE
ALPINE, UT 84004

DRAWING TITLE: ANTENNA DIAGRAM

DRAWING NO.: E-5

ALPINE PLANNING COMMISSION AGENDA

SUBJECT: Eagle Pointe Subdivision PRD Determination

FOR CONSIDERATION ON: 16 July 2013

PETITIONER: Mark Wells and Taylor Smith

ACTION REQUESTED BY PETITIONER: Recommend to the City Council that the development be a PRD

APPLICABLE STATUTE OR ORDINANCE: Zoning

PETITION IN COMPLIANCE WITH ORDINANCE: Yes

BACKGROUND INFORMATION:

The proposed Eagle Pointe Subdivision is located at approximately 800 West 600 North (just north of intersection of Hog Hollow Rd. and Matterhorn Dr.). The proposed subdivision consists of 16 lots ranging from 20,316 s.f. to 53,401 s.f. on a site that is 31.88 acres. The site is located in the CR-40,000 zone. The applicant is requesting that the subdivision be developed as a PRD. The proposed plans as shown will require exceptions to be made that would allow for a longer cul-de-sac than the ordinance allows and the lack of a secondary access.

RECOMMENDED ACTION:

We recommend to the City Council that the Eagle Pointe Subdivision **[be / not be]** developed as a Planned Residential Development (PRD):

NOTE: The Planning Commission may want to suggest any necessary changes to the site plan before it returns for concept reveiw.

RECEIVED JUN 14 2013

Concept Plan Application

20 North Main Alpine, UT 84004 • 801-756-6347 (Phone) • 801-756-1189 (Fax) • www.alpinecity.org

Contact Information

Applicant MARK WELLS 8013671636 S. TAYLOR SMITH 8016005757

Address 922 W PFEIFFERHORN Dr City ALPINE State UT Zip 84004

Phone 801 3671636 Fax 8017639695 Email mark.skyfinancial@gmail.com

Engineer DAVID PETERSON EXCEL ENGINEERING

Address 12W 100N #201 City A.F. State UT Zip 84003

Phone 801 756 4504 Fax Email David@excelcivil.com

Representative
(Person who will be at City meetings to represent the proposed plan. If it is someone other than the applicant/engineer, please indicate his/her relationship to the project.)

Address City State Zip

Phone Fax Email

Send City Engineer's review comments to: ☑ Applicant ☑ Engineer ☐ Representative

Project Information

Name of Subdivision EAGLE POINTE

Project Address Hog Hollow + MATTERHORN Proposed Number of Lots 16

Project Size (in acres) 30 Current Zoning RESIDENTIAL

Source of Water Rights

Alpine Irrigation Shares: # of Primary Shares # of Secondary Shares

Other Water Rights: Source # of Acreage Feet

☑ Requesting Cash in lieu of Water Rights Option

Concept Plan Fee $320 + $100 Amount Paid $420 Date Paid 6/14/2013
(Actual cost of City Engineer's review + $100.00 + $20.00 per lot)

Applicant Signature Date 6/14/2013

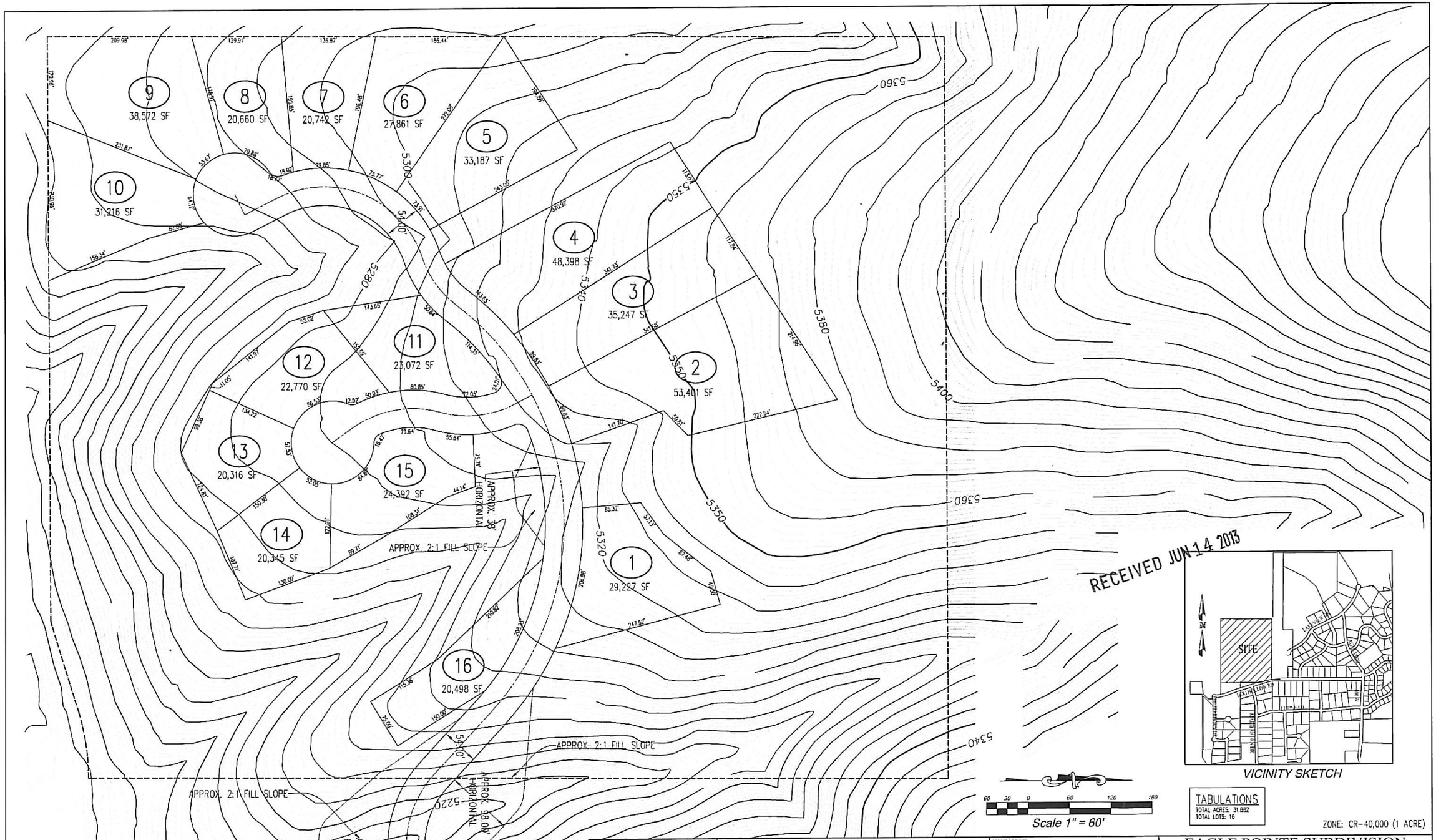

RECEIVED JUN 14 2013

RECEIVED JUN 10 2013

Ck# 1039
$ 25.00

Application for Home Occupation Business License

20 North Main Alpine, UT 84004 • 801-756-6347 (Phone) • 801-756-1189 (Fax) • www.alpinecity.org

Please clearly print or type an answer to every question. Incomplete applications will not be accepted. Application submittal is required prior to opening. All applicable Federal and State numbers must be obtained before application and fee will be accepted. All business licenses expire December 31st of each year.

SECTION I: Business Information

Business Name: J+L Endeavors, LLC

Business Phone: 801-787-8405

Business Address: 255 N Main Alpine, UT 84004

Mailing Address: 255 N Main Alpine, UT 84004
(Include City, State and Zip)

Website:

Business Email:

SECTION II: Owner/Manager Information

Business Owner: James Lawrence (Name) 255 N Main Alpine, UT (Home Address)

Owner Phone: 801-787-8405 Email Address: jameslawrence700@msn.com

SECTION III: Federal and State Requirements

Federal and State numbers can be obtained by logging onto www.business.utah.gov/registration.html (OneStop Business Registration). The State Tax Commission office can be reached at 1(800) 662-4335. The Department of Commerce office can be reached at (801) 530-4849.

Ownership Type: ☐ Corporation ☐ Partnership ☐ Proprietorship ☒ LLC

DBA

EIN Business Registration Number: 8457643-0160 ~~46-1135547~~ State Sales Tax Number: 12081788-003-STC

Federal Tax ID Number: 46-1135547 Employer Withholding Number:

State License Type (if any): Number: Expires:

Federal License Type (if any): Number: Expires:

SECTION IV: Business Description

Home Occupation: ☒ Yes ☐ No (If you answer yes to any of the following questions, please provide detailed information)

1. Approximately how many customers will visit the home per week? 20
2. Will there be any display or stock at the home? ☐ Yes ☒ No
3. Will there be an additional employee other than residing family? ☐ Yes ☒ No
4. Will hazardous materials or chemicals be used as part of the business or stored at the home? ☐ Yes ☒ No
5. Do you have adequate off street parking at your home for additional parking? ☒ Yes ☐ No

   If no, how will you provide additional parking? _____
6. What area of your home will be used for your business? Shop
7. What is the square footage of that area? 1000 sq. feet
8. Will there be any remodeling? ☐ Yes ☒ No Permit No: _____

Describe your business in detail: Mechanical Repair

I have answered the above questions honestly and agree to comply with the Home Occupation Business Regulations.

Owner's signature _____ Date 6/10/13

☐ Yes, I want my Home Occupation listed in the Newsline

License Fee: $25.00 per year **$25.00 for one (1) non-family member employee per year**

FOR CITY USE ONLY

Planning Commission Date: _____

Zoning Inspection signature (if applicable) _____ Date _____

Fire Inspection signature (if applicable) _____ Date _____

Building Inspection signature (if applicable) _____ Date _____

Date Paid: _____ Amount Paid: _____ Receipt #: _____

Payment Method: _____ (Reference #) License Number Issued: _____

RECEIVED JUN 18 2015

CK # 8230

$25.00

Application for Home Occupation Business License

20 North Main Alpine, UT 84004 • 801-756-6347 (Phone) • 801-756-1189 (Fax) • www.alpinecity.org

Please clearly print or type an answer to every question. Incomplete applications will not be accepted. Application submittal is required prior to opening. All applicable Federal and State numbers must be obtained before application and fee will be accepted. All business licenses expire December 31st of each year.

SECTION I: Business Information

Business Name: ROADSIDECLASSICS

Business Phone: 801-830-0687

Business Address: 1267 E. ROUND MOUNTAIN CIRCLE

Mailing Address: (SAME)
(Include City, State and Zip)

Website: ROADSIDECLASSICS.COM

Business Email: Bradleyhawkes@Hotmail.com

SECTION II: Owner/Manager Information

Business Owner: Brad Hawkes (SAME)
(Name) (Home Address)

Owner Phone: 801-830-0687 Email Address: (SAME)

SECTION III: Federal and State Requirements

Federal and State numbers can be obtained by logging onto www.business.utah.gov/registration.html (OneStop Business Registration). The State Tax Commission office can be reached at 1(800) 662-4335. The Department of Commerce office can be reached at (801) 530-4849.

Ownership Type: ☐ Corporation ☐ Partnership ☑ Proprietorship ☐ LLC

DBA ROADSIDECLASSICS

Business Registration Number: 1803786 1129 State Sales Tax Number: 10374768 003 STC

Federal Tax ID Number: 518043234 Employer Withholding Number: —

State License Type (if any): — Number: — Expires: —

Federal License Type (if any): — Number: — Expires: —

SECTION IV: Business Description

Home Occupation: ☐ Yes ☑ No (If you answer yes to any of the following questions, please provide detailed information)

1. Approximately how many customers will visit the home per week? 1
2. Will there be any display or stock at the home? ☑ Yes ☐ No
3. Will there be an additional employee other than residing family? ☐ Yes ☑ No
4. Will hazardous materials or chemicals be used as part of the business or stored at the home? ☐ Yes ☑ No
5. Do you have adequate off street parking at your home for additional parking? ☑ Yes ☐ No

   If no, how will you provide additional parking? _____
6. What area of your home will be used for your business? ~20%
7. What is the square footage of that area? ~1000
8. Will there be any remodeling? ☐ Yes ☑ No Permit No: _____

Describe your business in detail: Investment-grade collectibles restoration ~~collectibles~~

I have answered the above questions honestly and agree to comply with the Home Occupation Business Regulations.

Owner's signature _____ Date 6.15.13 ☐ Yes, I want my Home Occupation listed in the Newsline

License Fee: $25.00 per year **$25.00 for one (1) non-family member employee per year**

FOR CITY USE ONLY

Planning Commission Date: _____

Zoning Inspection signature (if applicable) _____ Date _____

Fire Inspection signature (if applicable) _____ Date _____

Building Inspection signature (if applicable) _____ Date _____

Date Paid: _____ Amount Paid: _____ Receipt #: _____

Payment Method: _____ (Reference #) License Number Issued: _____

ALPINE CITY PLANNING COMMISSION MEETING at
Alpine City Hall, 20 North Main, Alpine, Utah
June 04, 2013

I. GENERAL BUSINESS

A. Welcome and Roll Call: The meeting was called to order at 7:04pm by Chairman Jannicke Brewer. The following commission members were present and constituted a quorum.

Chairman: Jannicke Brewer
Commission Members: Bryce Higbee, Steve Cosper, Jason Thelin, Jannicke Brewer, Chuck Castleton, Steve Swanson
Commission Members Not Present: Todd Barney
Staff: Marla Fox, Jason Bond, Shane Sorensen

Others: Shawn Brenchley, Stephen Larsen, Will Jones, Bryce Nelson

B. Prayer/Opening Comments: Steve Cosper

II. PUBLIC COMMENT

III. ACTION ITEMS

A. PUBLIC HEARING – Townhouse Overlay Zone
Will Jones is proposing the creation of a Townhouse Overlay Zone in Alpine City. This potential ordinance would be nearly identical to the Senior Housing Overlay Zone. The proposed townhomes would be built at approximately 242 South Main Street. This proposal is contingent on the adoption of a new ordinance and an amendment to the General Plan since multi-family housing is currently not allowed in Alpine City.

Will Jones said the density would be similar to the Senior Housing. It would be confined in the Business Commercial Zone. He said they would have 30% open space for a play area for younger families and would not propose anything bigger than a 4-plex. Mr. Jones said it would not be an apartment complex and they would limit the amount of rentals and have others for sale.

Jannicke Brewer said in 2007 there was a strong feeling to not have anything like this in the City. Things have changed in the last few years. Residents who are getting older may want this option with less yard work and be able to stay in Alpine. We need to discuss the amendments that would need to be changed in the general plan to allow this type of housing because currently we don't allow it. We would need a public hearing meeting, then send this to Planning Commission, and then to City Council.

Will Jones said we do allow this type of housing because the Senior Housing Overlay is the same thing and is in the current ordinance. The only difference is that these townhouses don't have an age limit and they will have open space. Jannicke Brewer said this is a new step for us and she felt like we needed to have more input from the residents before a decision was made. Bryce Higbee asked if there would be a height restriction. Will Jones said this would be main floor living, one level units no higher than 34 feet.

Jason Thelin asked if we had any other areas in the Business Commercial Zone that could be used. Will Jones said it would have to be created by taking out homes. Jason Thelin asked about the Bangerter property and if that was an option to build there. He also asked why you can't just put it in as a Senior Housing Overlay. Will Jones said he wants to open it up to all ages. He said he has talked to younger people who don't want yard work. Steve Cosper asked how many units this would be. Will Jones said about 28 and they will follow the Senior Housing. Jannicke Brewer asked if they would be moderate housing. She said we need affordable housing. Will Jones said these townhomes would probably not solve that problem.

DRAFT

Steve Cosper said this is a fundamental change that the citizens need to have input on. Will Jones said he would put together a packet that he could give to surrounding neighbors and put up a sign at the roundabout to inform them of a public hearing. Jason Bond said to advertise this in the newsline and to put up a sign directly at the site. Jason Thelin said we need to be concerned about parking and traffic on a very congested Main Street, with small children around. Will Jones said the property would be fenced very carefully with access to the trail.

There is one event that would be difficult and that is when school is starting and ending. Chuck Castleton said this would have an oversized impact to the feel to the community. Will Jones said there would be a good landscaping scheme and a fence surrounding it so the kids can stay inside. Jannicke Brewer said as a Planning Commission we need to look favorably at this idea. They proposed to put information in the July news letter and have a hearing in August.

B. Brenchley Residential Site Plan – 249 North Alpine Blvd. – Shawn Brenchley

The proposed Brenchley Site Plan at 232 North Alpine Blvd includes five parcels totaling 4.131 acres. The owner was given direction by the DRC that the parcels would either need to be combined into one parcel or that property lines would be required to be adjusted so that any proposed structures would meet the required setbacks. The property is in the CR-40,000 zone.

The Planning Commission discussed this site plan previously and recommended it be discussed again at the June meeting. The Planning Commission had a discussion about requiring the property owner to extend Meadow Brook Drive to connect to Alpine Blvd. They also discussed the ditch to the east and section 4.7.19.2 of the Alpine City Subdivision Ordinance that says "All irrigation ditches in subdivisions/site plans shall be piped underground. Certain ditches that are legally required to be left open by Alpine Irrigation Company are exempt."

Shawn Brenchley said he is working with the surveyor and the title company and would like to take the five parcels and combine them into one parcel. He feels for tax purposed this is the best thing to do for his family. Shane Sorensen said he went back through the files and this property was submitted to the City. It was not recorded. There were 4 sets of utility services put in and no through street in conjunction with the Applewood Subdivision. The 1997 street plans show that a road went through the Meadow Brook Subdivision. On the next Master Plans in 2005, the road was not there and it went through both Planning Commission and City Council.

Jannicke Brewer said 25 years ago, when Mr. Olsen built his home, we didn't have a requirement to have a second access or requirements for lengths for cul-de-sacs. At the time his home was built, 300 north had not been built and his main access was on Meadow Brook. Jannicke Brewer said Mr. Benchley's property doesn't have anything to do with the property on Meadow Brook or their 2nd access. Jannicke Brewer was told by David Church that we cannot require Mr. Brenchley to put the road through. Steve Cosper asked if we have a ruling from the Fire Chief and he said it wasn't safe, then it would overrule what David Church said.

Shane Sorensen said the ditch was discussed at DRC a week ago and this ditch has to be left open so the public workers can check and clean out the ditch. This ditch is partly on Mr. Benchley's property and partly off. Steve Cosper said if it is required and we aren't going to pipe it, why even have an ordinance. Shane Sorensen said because some areas need to be piped. City workers know what will work best for the City, and we want this left open for maintenance. Jannicke Brewer said we need to follow the recommendation of the engineers and do what they think is best in this situation.

MOTION: Jason Thelin moved to recommend an exception to Section 4.7.19.2 of the Alpine City Subdivision Ordinance requiring all ditches to be piped with the condition that the owner remove any dead vegetation or vegetation that is hanging into the ditch from the ditch alignment. We also approve the proposed site plan subject to the following conditions:

1. The parcels be combined into one parcel.
2. The driveway, as laid out, is acceptable in relation to the arterial street requirements.
3. The Fire Marshall determine if the existing fire protection in the area is sufficient.
4. The water policy be met for the lot.
5. A land disturbance permit be obtained as part of the building permit process.

Steve Cosper asked again what happens if the Fire Chief determines this area unsafe and you have already given final approval. Jason Bond said it would be brought back to the City and staff would have to work with the Fire Chief to make it safe. Jason Thelin asked if the City would then come back and buy some land from Mr. Brenchley to put the road through. Steve Swanson said Meadow Brook was build without any exceptions. Jannicke Brewer said we didn't have these rules 25 years ago. Shane Sorensen said he would love to see the road go through from a public works perspective but in talking with David Church, it can't be done.

Steve Swanson seconded the motion. The motion passed unanimously with 6 Ayes and 0 Nays. Bryce Higbee, Steve Cosper, Jason Thelin, Jannicke Brewer, Chuck Castleton, and Steve Swanson all voted Aye.

C. Pine Valley Realty Office Building – Approximately 360 South Main Street – Will Jones

This is a parcel of land on the Northwest corner of the intersection of Canyon Crest Road and Main Street (at the roundabout). The 26,465 s.f. parcel is planned to include a new office building for Pine Valley Realty. The building pad is 3,650 s.f. and will have two stories and a basement. According to Article 3.24 (Off Street Parking) of the Zoning Ordinance, four (4) parking spaces are required for every 1,000 s.f. This two story building, including the basement would bring the total requirement of parking spaces to 44. Depending on the design aspects, (high ceilings, etc.) the number of required parking spaces may be a few less (approximately 39).

Mr. Jones is requesting that an exception (section 3.24.4 Reduction of Off-Street Parking Requirement) be made so that the basement square footage would not apply to the parking requirement. This way, the basement square footage would not require additional, unnecessary parking but could be used for necessary storage. Mr. Jones, with the exception (not including the basement), would plan on having two (2) stories which would bring the total requirement to 29 spaces (without taking into consideration the design aspects).

Jason Bond said staff recommends that this would be good planning and adequate parking as long as there was an agreement with the City. Bryce Higbee said the issue is with the next owner of the building down the road. Will Jones said it wouldn't be an issue if that new business doesn't need more than the 29 parking spaces. He said he has room to put in more parking out front along the roundabout, but he would rather put in more landscaping and make the roundabout look nice.

Will Jones said the basement would be for storage only. We wouldn't have an outside access to the basement, no windows, 8 foot ceilings, and a deed restriction. Jannicke Brewer said if you have a 7 foot ceiling, you wouldn't be allowed to occupy the basement. It wouldn't be useful for anything other than storage. Jason Thelin said we need to change the ordinance so that we don't have to give exceptions to anyone, it needs to be fair for everyone.

Bryce Higbee said we need to enforce the ordinance if someone is breaking them. Will Jones said we have 3 mechanic garages in the city that are illegal. We have ordinances that say they are not allowed but we don't enforce them.

Jason Thelin asked what the City is going to do to ensure that this basement won't be used for anything other than storage. Bryce Higbee said we are more concerned with the next owner and what he does with the basement. Jason Bond said we would require a deed restriction. Shane Sorensen said the deed restriction would follow the title. We could get with David Church and see how the deed restriction should be written. Steve Swanson said to write it saying low ceiling, no windows, and no door. Will Jones said he will do what is asked, but he may be required by the building inspector to have a window in the mechanical room. Steve Cosper said the inspector may only require a vent and a pipe duct.

MOTION: Jason Thelin moved to recommend to the City Council to not give an exception to parking, but to make a modification to the ordinance that would benefit everyone.

There was no second to the motion.

Shane Sorensen said you could have a condition in the motion that if you violate the building code you could ask them to come back to Planning Commission with the Site Plan.

DRAFT

MOTION: Chuck Castleton moved to recommend approval of the exception, 3.24.4, given that we require a 7 foot ceiling, no windows, and a deed restriction (approved by the City Attorney) forbidding occupancy in the future with the condition that these [conditions] are in compliance with the building code.

Steve Cosper seconded the motion. The motion passed, but was not unanimous with 5 ayes and 1 Nay. Bryce Higbee, Steve Cosper, Jannicke Brewer, Chuck Castleton, and Steve Swanson all voted Aye. Jason Thelin voted Nay.

Fort Canyon Road – Steve Larsen

Canyon Brook PRD is a proposed subdivision located at approximately 1520 fort Canyon Road. The proposed subdivision consists of 3 lots on 52.01 acres in the CE-5 zone. This is a resubmittal of a development that was previously approved for this property, which was also called Canyon Brook. However, the approval of that development has since lapsed and this is being considered as a new application. The development was given concept approval at the March 5, 2013, Planning Commission meeting, with conditions.

Shane Sorensen said Mr. Larsen came back with the same plan as they had before. He said as far as the lot lay out is there are no issues. This subdivision would have a section of road that would need to be improved. The City recommends a 26 foot width section of pavement. We feel that the money for this project should be put in escrow until the time the rest of the road is ready to be improved. We also need to take a look at retaining walls and see if the road can be built without them.

Shane Sorensen said we have 6 inch water line currently and we are looking at putting in a 10 inch water line when the road goes in. The Fire Marshall said he is fine with the plan as proposed. What is being proposed currently are two catch basins at the South end of the subdivision, piped over to a small retention basin. We don't prefer retention basins and only allow them if there is no other option. There should be an easement and a storm drain line over to Fort Creek. One issue is that our minimum that we will allow is 15 inch storm drains. The Three Falls Fort Canyon plans have 24 inch lines. Mr. Larsen doesn't want to pay the extra money to have the bigger line and needs to discuss the options for the up-size storm drain line with the City. Shane Sorensen said Mr. Larsen has Alpine City water shares, so we would look to that to meet the water policy.

Steve Larsen would have to apply with the Fire Marshall to get an exception to not have a second access in the wildland interface area. In looking at this area, there is not an opportunity for a second access. We do have a provision in the ordinance where Mr. Larsen can apply for an exception. Mr. Larsen said he spoke with the Fire Marshall and he was fine with exception.

Jannicke Brewer read from ordinance 3.12.7.4.2, where it states: All developments in urban wildland shall have more than one access. Exception #2 states: where terrain features or other physical obstacles make provisions of a second access impractable, a single access may be approved by the City Council after obtaining the recommendation of the Fire Chief and the Planning Commission. Jason Bond said the Fire Marshall didn't specifically mention an exception for the second access. Jannicke Brewer said we can approve a single access because of the physical terrain and ask that the Fire chief also turn in a recommendation.

Jannicke asked if we were sure about how to handle the easement along the creek. Is it private ownership or does it go with the lots? Steve Larsen said it goes with the lots but it is overridden with conservation easement on top of it. He said they will be using the same documentation they used last time this was brought forward. It was reviewed in 2006 by David Church and was okay.

Jannicke said she read the CC&R's and it said in there that if the lot was bigger than two and a half acres, they could be divided. These lots can't be divided because this is a PRD and that needs to be taken out. The other issue had to do with pets and animals. It was very unclear and said you could have up to five pets. She said Mr. Larsen would have to follow City ordinance which allows two dogs.

MOTION: Bryce Higbee moved to approve preliminary and recommend final approval of the Canyon Brook PRD Subdivision be granted subject to the following conditions:

1. An exception be granted to allow the pavement width to be 26 feet wide.

2. The City Council determine if the street improvements will be required to be constructed at this time or if the funds for the improvements will be required to be put in an escrow account with the City for use when the entire Fort Canyon road is re-constructed.
3. A storm drain plan be designed that includes piping the storm water from Fort Canyon Road to Fort Creek. A 15 foot easement for the line be included on the final plat, with a 24 inch line minimum. We recommend that the developer discuss the options for the cost of the up-sized storm drain line with the City.
4. A UPDES permit be obtained and a SWPPP plan be provided to and approved by the City prior to beginning construction.
5. The water policy be met with the Alpine Irrigation Company shares.
6. A note be placed on the final plat noting the existing geological and geotechnical reports that are on file with the City for this development.
7. We recommend an exception subject to section 3.12.7.4.2 subject to obtaining written approval from the Fire Chief as well as written approval from the Fire Chief that fire sprinklers are an acceptable option to reduce the required fire flows for the area.
8. That the CC&R's be amended pertaining to the number of pets allowed and ability to subdivide the lots.

Steve Swanson seconded the motion. The motion passed unanimously with 6 Ayes and 0 Nays. Bryce Higbee, Steve Cosper, Jason Thelin, Jannicke Brewer, Chuck Castleton, and Steve Swanson all voted Aye.

E. Fence Ordinance Amendment

Currently, only fences in excess of six (6) feet need to be approved by the Planning and Zoning department and obtain a building permit. Staff would like to require all fences to obtain a building permit (no fee) so that all fences are built up to code.

MOTION: Steve Cosper moved to recommend that Article 3.21.6 of the Development Code not be amended.

Bryce Higbee seconded the motion. The motion passed unanimously with 6 Ayes and 0 Nays. Bryce Higbee, Steve Cosper, Jason Thelin, Jannicke Brewer, Chuck Castleton, and Steve Swanson all voted Aye.

F. Minor Subdivision Process Amendment

Minor Subdivisions have been required to go to both Planning Commission and City Council for obtaining approval. A lot of Minor subdivisions are straightforward but the process for approval can be cumbersome for the applicant. The proposed amendment would allow the DRC to approve Minor Subdivisions and streamline the process. Therefore, time would be saved for the applicant and for the Planning Commission and City Council to spend on other issues.

MOTION: Steve Cosper moved to recommend to the City Council to amend the Minor Subdivision, Article 4.5.1. of the Development Code to include only the following:

1. 4.5.3.1.3 be changed in accordance with the proposed revisions.
2. 4.5.3.2.3 last paragraph be changed to say "Alpine City shall mail the notification letter to the listed property owners that are within 300 feet of the property. This shall be done at least 7 days prior to the first Planning Commission at which the plan will be presented."

Chuck Castleton seconded the motion. The motion passed unanimously with 6 Ayes and 0 Nays. Bryce Higbee, Steve Cosper, Jason Thelin, Jannicke Brewer, Chuck Castleton, and Steve Swanson all voted Aye.

G. Site Plan Process Amendment

Site Plans (not located in an approved subdivision) have been required to go to both Planning Commission and City Council for obtaining approval. A lot of Site Plans are straightforward but the process for approval can be cumbersome for the applicant. The proposed amendment would allow the DRC to approve Site Plans and streamline the process. Therefore, time would be saved for the applicant and for the Planning Commission to spend on other issues.

DRAFT

Jason Bond said if there are complex Site Plans, or issues that cause adverse impacts, we would bring them to Planning Commission.

MOTION: Bryce Higbee moved to recommend to City Council to approve the changes made to the Site Plan to Comply Ordinance Article 4.14 of the Development Code. We also recommend that the definition for subdivision in the "Definition" section remain, and items 3 and 4 under the "Site Plan Approval Process" not be changed.

Steve Cosper seconded the motion. The motion passed unanimously with 6 Ayes and 0 Nays. Bryce Higbee, Steve Cosper, Jason Thelin, Jannicke Brewer, Chuck Castleton and Steve Swanson all voted Aye.

IV. COMMUNICATIONS

Jason Bond said an update of the General Plan is overdue and we need to spend some time on it. Jannicke Brewer said maybe we should wait until later in the year when things start to slow down.

Because of the Fourth of July holiday, the next Planning Commission meeting will be on July 16, 2013.

VI. APPROVAL OF PLANNING COMMISSION MINUTES OF: May 07, 2013

MOTION: Steve Cosper moved to approve the Planning Commission Meeting Minutes with revisions for May 7, 2013.

Chuck Castleton seconded the motion. The motion passed unanimously with 6 Ayes and 0 Nays. Bryce Higbee, Steve Cosper, Jason Thelin, Jannicke Brewer, Chuck Castleton, and Steve Swanson all voted Aye.

Jannicke Brewer stated that the Planning Commission had covered all of the items on the agenda and adjourned the meeting at 9:15pm.

DRAFT