DAVIS COUNTY PLANNING COMMISSION

AGENDA

December 6, 2012

The meeting will begin at 6:00 p.m. in the Aurora board room at the Davis Conference Center, 1651 North 700 West, Layton, Utah. All other times are approximate and are subject to change.

6:00 p.m. Pledge of Allegiance

6:01 p.m. Approval of minutes of November 1, 2012 ..... Scott Hess

6:02 p.m. Chevron Pipeline Subdivision Public Hearing..... Scott Hess

6:10 p.m. Mosquito Abatement Conditional Use Public Hearing.....Scott Hess

6:20 p.m. Agricultural Protection – Dix Roberts – Recommendation.....Scott Hess

6:25 p.m. General and Pending Business.....Scott Hess

6:30 p.m. Adjourn

CONDITIONAL USE PERMIT – MOSQUITO ABATEMENT

APPLICANT: Davis County Mosquito Abatement District on behalf of Utah Division of Natural Resources – Gary Hatch as applicant

REQUEST: Mosquito Abatement District would like to place a 100 foot tall weather tower on land owned by Utah Division of Natural Resources.

LOCATION: Parcel ID: 08-084-0002 – Approximately 1325 W. 1350 S. Farmington, UT 84025

PROJECT DESCRIPTION: Installation of a freestanding 100 foot tall weather tower. The tower would be served with on-site solar power and cellular telephone service.

GENERAL INFORMATION: The new tower would be a freestanding aluminum structure with no guide wires. The tower would be anchored to an engineered concrete footing that is 5'x5' wide and 6' deep. The location would adjacent to an existing access road at or near the property line. Utah DNR owns the adjacent property to which the tower would be placed.

Utah Division of Natural Resources is the property owner, and Mosquito Abatement has provided a copy of the License Agreement with DNR for operation and maintenance of a weather instrument tower. The Agreement in hand with staff has not been signed by both parties. Staff would recommend that this application be approved with the condition that the agreement is signed and in-place prior to issuing a building permit.

The location of the new tower is roughly one mile from the "golf ball" doplar radar tower in Farmington. Staff sees no conflict with neighboring property owners, and has notified property owners within 300' of the property. Staff recommends Mosquito Abatement fence the tower off to avoid persons attempting to climb the tower.

STAFF RECOMMENDATION: Staff recommends approval of the conditional use permit, with the conditions of a fence surrounding the bottom of the tower, and an executed License Agreement with Utah Division of Natural Resources.

ACTION CHOICES: Approval as presented, approval with conditions, or denial.

SUGGESTED MOTION: Motion to approve the conditional use permit for construction of a 100' tall weather tower, with the conditions of a fence surrounding the bottom of the tower, and an executed License Agreement with Utah Division of Natural Resources.

Office Use Only
Parcel ID # _____
Receipt # _____

DAVIS COUNTY PLANNING COMMISSION
CONDITIONAL USE APPLICATION

Petition: MOSQUITO ABATEMENT DISTRICT - DAVIS

Petitioner Address: 85 N 600 W KAYSVILLE

GARY HATCH 801-725-0998

Phone # 801-544-3736 **Cell #** 801-643-9988 **E-mail** hatchgary1@gmail.com

JEFF GINES

Requested Use: WEATHER TOWER - 100' TALL

Zoning: _____ APPROX 1325 W. 1350 SOUTH, FARMINGTON 84025

Owner of Property: UTAH DIVISION OF NATURAL RESOURCES

Mailing Address: _____

Property Address: PARCEL ID: 08-084-0002

Petitioner is: [ ] Owner [ ] Owner's Agent [ ] Prospective Buyer

[X] Other, please specify LIMITED USE PERMIT

Dated this 30 day of OCTOBER, 2012.

Gary L. Hatch
Signature

_____
Signature

STATE OF UTAH)
) SS.
COUNTY OF DAVIS)

On the 30th day of October, 2012, personally appeared before me Flor P. Perez the signer(s) of the above instrument who duly acknowledged to me that Gary L. Hatch executed the same.

Flor P. Perez
Notary Public

_____
Seal

NOTARY PUBLIC
FLOR PEREZ
603919
My Commission Expires
February 3, 2015
STATE OF UTAH

Davis County **PLANNING**

Received of: MOSQUITO ABATEMENT DISTRICT

Receipt # 0000445785

Date received: 11/06/2012

Received by: LINDA KRAN

plan3

Payment type	Amount	
PLANNING FEES	200.00	10-3413-000 CONDITIONAL USE PERMIT APPLICATION

Receipt total: 200.00

Calls and Fog Map

Details Add | Edit Basemap |

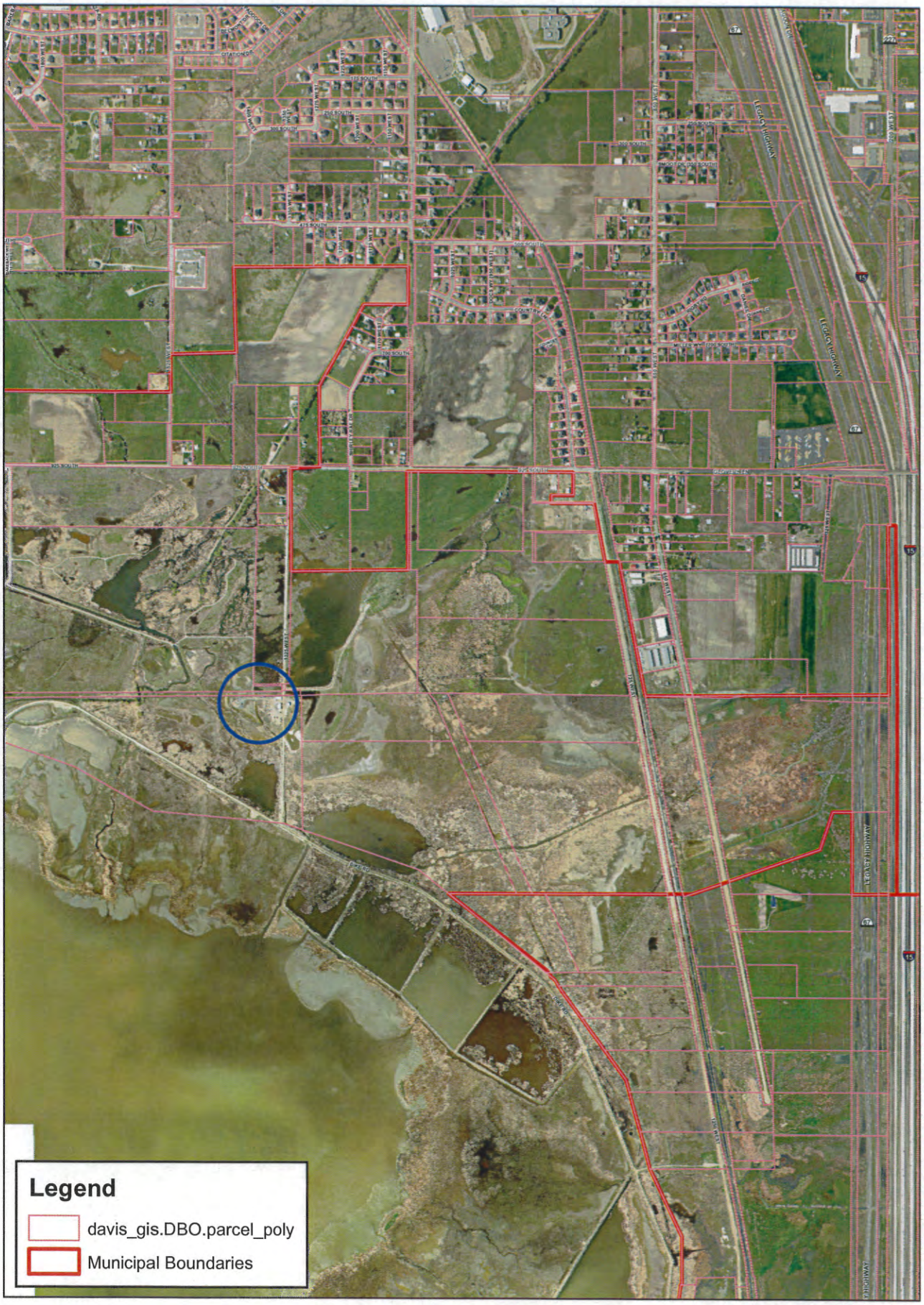

Mosquito Abatement Conditional Use Request
Location Map

0 0.125 0.25 0.5 0.75 1 Miles

N

LICENSE AGREEMENT
For Installation, Operation, and Maintenance of a Weather Instrument Tower
On Farmington Bay WMA
DAVI-1208LI-0302

This License Agreement ("License") is entered into by and between the Utah Division of Wildlife Resources of 1594 West North Temple, Suite 2110, P.O. Box 146301, Salt Lake City, Utah ("Division"), and the Mosquito Abatement District - Davis County of 85 North 600 West, Kaysville, Utah 84037 ("Licensee"). Division and Licensee are collectively referred to herein as the "Parties."

RECITALS

WHEREAS, the Division owns certain real property known as the Farmington Bay Waterfowl Management Area ("WMA") located in Sections 34 and 35, Township 3 North, Range 1 West, SLB&M, Davis County, Utah ("Property"), more specifically depicted in Exhibit A; and

WHEREAS, Licensee desires to install and temporarily operate a 100-foot tall tower for weather data collection within the WMA; and

WHEREAS, the Parties are authorized to enter into this Agreement consistent with the provisions found in Utah Code Section 23-22-1.

NOW THEREFORE, the parties agree as follows:

1. PURPOSE. Licensee wishes to construct a temporary weather instrument tower on the WMA. The proposed weather instrument tower shall be composed of a 100-foot free standing tower, with instruments for wind and temperature measurements at heights of 10 and 100 feet, and a base composed of a 6 foot by 6 foot concrete slab. The system will use solar power and cell phone service for transmission of data. The tower will be voice-active and when called will give wind direction, velocity and temperature at both of the instrument heights. The site will be surrounded by an 8-foot chain link fence to prevent vandalism and unauthorized persons from climbing the tower. The full footprint of the tower and fence will be 10 feet by 10 feet. The entire infrastructure described in this paragraph is referred to herein as "Weather Tower Site" or "Site." Licensee may construct one Weather Tower Site at either Potential Site #1 or Potential Site #2, generally depicted in Exhibits A and B. This weather data collected at the Site is to be used for the mosquito abatement program in the Davis County, Utah area, and by the Division to assist in timing of use of fire to control vegetation in the WMA and for other purposes.
2. PARTY OBLIGATIONS. The Division agrees to allow the following uses of the Property, but specifically reserves the right to unilaterally revoke the License at any time and for any reason:

The Division authorizes Licensee to temporarily locate, operate, repair, and, if necessary, replace, one Weather Tower Site consistent with the terms of this License. Any expansion of activities beyond those proposed herein must be approved in writing by the Land & Water Assets Program, Habitat Section, Utah Division of Wildlife Resources, at the address above.

Licensee shall coordinate with the WMA Manager (contact below) as to the timing of initial construction activities. Licensee further agrees to provide 48 hours notice of any and all proposed activities by Licensee on the WMA property.

WMA Manager:
Richard Hansen
DWR Northern Region
515 East 5300 South
Ogden, Utah, 84405
Phone office (801) 451-7386, mobile (801) 391-1454

After initial construction is complete, Licensee shall not use any heavy machinery in the installation, maintenance, repair, or replacement of monitoring equipment without the prior written consent of the WMA Manager.

Motorized Equipment, Roads: Licensee shall not operate motorized equipment off of maintained roads. Licensee shall not use WMA roads when they are wet, muddy, or susceptible to damage. In the event that roads are damaged by Licensee's use, Licensee shall promptly repair the damage caused.

Gates: Access is granted through gates, said access to be coordinated with the WMA Manager. Gates shall be left closed and locked as directed by the WMA Manager. All other access shall be on foot only without the prior consent of the WMA Manager. The WMA Manager may at his/her discretion, and in writing, further relax, restrict, or clarify the usage of vehicles or ATVs.

Licensee shall conduct activities under this License in such a manner so as to not interfere with the wildlife and/or habitat values of the WMA property. Licensee shall coordinate with the WMA Manager on methods of minimizing their impact to the wildlife and/or habitat values of the WMA property.

Upon termination of this License, Licensee shall reclaim the Weather Tower Site area and any surrounding areas impacted by the use and operation of the Weather Tower Site. Reclamation may require reseeding and/or resurfacing of the project area. Reclamation and/or resurfacing responsibilities shall survive the termination of this License, and shall be conducted to the written approval of the WMA Manager. If Licensee fails to remove the Weather Tower Site infrastructure from the Property, said infrastructure shall become the property of the Division and may be removed by the Division at the expense of Licensee.

Uses or activities not outlined above are deemed outside the license and shall require prior written approval by an authority of the Division authorized to give such approval. Exercise of a use by the Licensee, his/her tenants, officers, agents, and/or representatives, that is outside what is specifically granted in this Agreement or specifically approved by

the Division in writing shall be grounds for, but not limited to, revocation of the license, trespass, and other civil remedies exercised by Division at their discretion.

Licensee agrees to share weather data collected from the Weather Tower Site with the Division immediately upon request by the Division.

3. REVOCATION. Both Division and Licensee understand that Division retains the option of revoking the License at any time and for any reason without prior notice to Licensee. Licensee shall be on notice that substantial investments, monetary or otherwise, shall not negate the revocation ability granted to Division in this Agreement.

4. TERMS AND CONDITIONS. The grant of this License is subject to the following Terms and Conditions:

   a. **Incorporation of Recitals**. The aforementioned Recitals are incorporated into this Agreement and referred to herein.

   b. **Fees and Administrative Costs.** There shall be no charge for the placement of the Weather Tower Site on the WMA. Licensee shall pay a single payment in the amount of **Eight Hundred Two and 76/Hundredths Dollars** ($802.76) in Administrative Cost Recovery. Payment is due when Lessee returns this Agreement to Division appropriately signed.

   c. **Enforcement**. The Division and Licensee intend that enforcement of the terms and conditions of this Agreement shall be at the discretion of the Division, and the Division's failure to exercise its rights under this Agreement, in event of any breach by Licensee, shall not be considered a waiver of the Division's rights under this Agreement in the event of any subsequent breach.

   d. **Release and Indemnification**. Licensee agrees to protect, indemnify, save and hold harmless the Division, its agents and employees, from and against all claims, demands, damages, and causes of action of every kind or character on account of bodily injuries, death, or damage to property arising because of, for, out of, or in any way connected with the performance of Licensee under this Agreement, except where such injury, death, or damage has resulted from the sole negligence of the Division without negligence or willful act on the part of Licensee, its agents, employees, or subcontractors. Licensee shall defend all suits brought upon such claims and pay all costs and expenses incidental thereto, but the Division shall have the right, at its option, to participate in the defense incidental thereto without relieving Lessee of any obligation hereunder. Nothing contained herein shall be construed as waiving immunity, the monetary damage limitations, or any other provision set forth in the Utah Governmental Immunity Act, Utah Code §§ 63G-7-101 through 63G-7-904.

   e. **Violations**. In the event the Division becomes aware of a violation or potential violation by Licensee of any condition or restriction in this Agreement, the Division may notify Licensee of such violation, potential violation, damage or potential damage. Upon receipt of such notice, Licensee agrees to immediately take action to prevent or stop the activity, which potentially or actually violates the terms or intent of this Agreement. Notification of a Violation in no way

CAM

inhibits or modifies the Division's authority to revoke at any time the License granted to Licensee.

f. **Non-Restrictive Agreement**. This Agreement in no way restricts Licensee or the Division from participating in similar activities or entering into other agreements with other public or private agencies, organizations and individuals.

g. **Amendment**. This Agreement may be amended as need may arise, provided such amendments are in writing and agreed upon by all Parties.

h. **Entire Agreement**. This Agreement sets forth the entire agreement of the Parties, and it is intended to supersede all prior discussion or understandings.

i. **Liberal Construction**. This Agreement shall be liberally construed. The Parties acknowledge that each has reviewed and revised this Agreement with the opportunity for legal assistance, and that no rule of construction resolving ambiguities against the drafting party shall be employed in interpreting this Agreement.

j. **Effective Date**. The effective date of this Agreement shall be the date it is signed by all parties.

k. **Governing Law**. This Agreement shall be interpreted and construed in accordance with applicable Utah laws.

l. **Authority**. The signatories to this Agreement each represent and warrant to hold lawful authority to execute this Agreement in behalf of their respective organizations and to bind the same to the terms and conditions herein.

m. **Contacts**. Official Contacts for both Parties are:

Division

Name: Therese Meyer
Position: Wildlife Realty Specialist, Habitat Section
Phone: (801) 538-4866
Email: theresemeyer@utah.gov

Licensee

Name: Gary L. Hatch
Mosquito Abatement District – Davis County
Position: Director
Phone: (801) 544-3736
Email: hatchgaryl@gmail.com

DIVISION OF WILDLIFE RESOURCES

LICENSEE

James F. Karpowitz

Director, Division of Wildlife Resources

DATE

Gary L. Hatch

Director, Mosquito Abatement District

10/30/2012

DATE

Funding Approvals:
Division of Wildlife Resources Fiscal Management

By:

Linda Braithwaite
Budget Officer

Date:

EXHIBIT A
Area Map of Farmington Bay Weather Tower Location

EXHIBIT B
Location of Weather Tower Site
Note: Green "Potential Site 2" is preferred site; if encounter high water table, will build at yellow "Potential Site 1".

Potential Tower Sites for Mosquito Abatement District-Davis

EXHIBIT A
Area Map of Farmington Bay Weather Tower Location

EXHIBIT B
Location of Weather Tower Site
Note: Green "Potential Site 2" is preferred site; if encounter high water table, will build at yellow "Potential Site 1".

Potential Tower Sites for Mosquito Abatement District-Davis

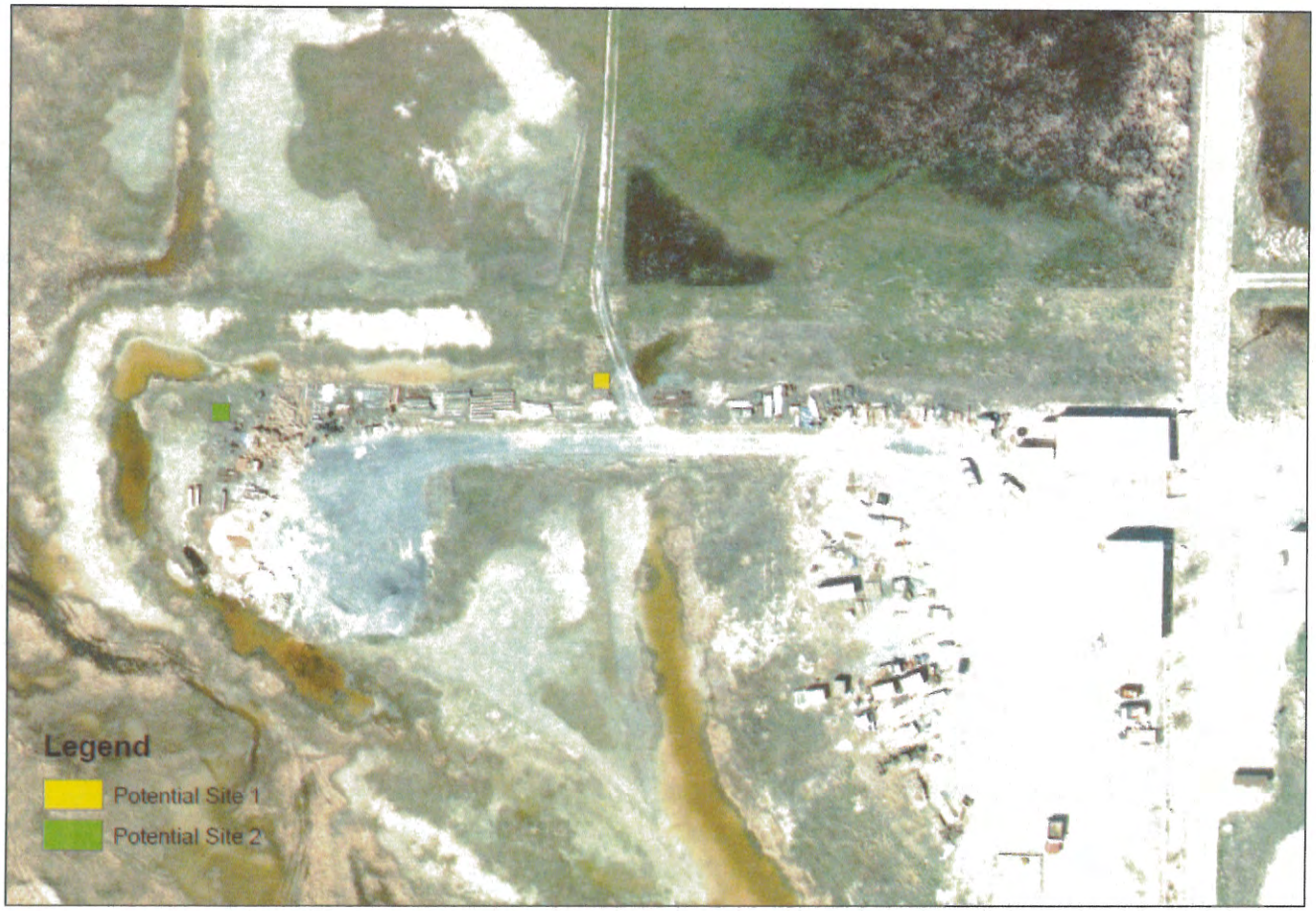

FREESTANDING ALUMINUM TOWER

MODEL #HD 8-100

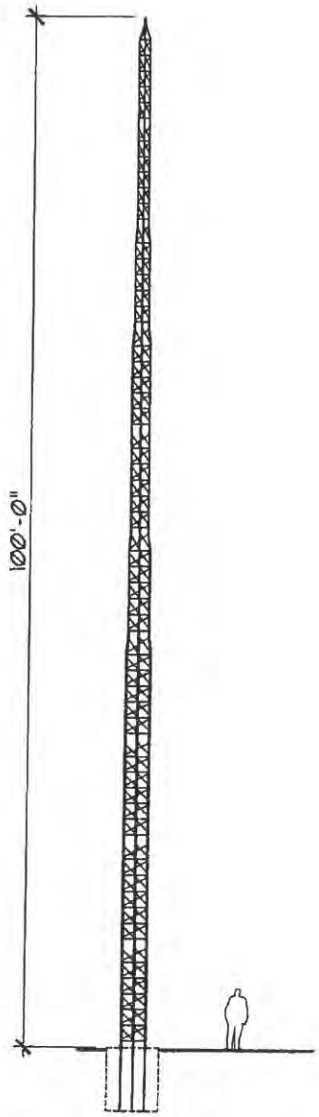

TOTAL WEIGHT: 435 LBS.

WIND LOADING:
7.49 Sq. Ft.

WARRANTY

UNIVERSAL TOWERS ARE WARRANTED AGAINST DEFECTIVE MATERIAL OR WORKMANSHIP AND ARE SUBJECT TO REPAIR OR TO MATERIAL REPLACEMENT ONLY IF FAILURE RESULTS FROM THESE FACTORS WITHIN ONE YEAR FROM PURCHASE BY USER.
THIS WARRANTY DOES NOT EXTEND TO ANY OF OUR PRODUCTS WHICH HAVE BEEN SUBJECTED TO MISUSE, NEGLECT, ACCIDENT, IMPROPER INSTALLATION OR APPLICATION, NOR SHALL IT EXTEND TO UNITS WHICH HAVE BEEN REPAIRED OR SUBSTANTIALLY ALTERED OUTSIDE OF OUR FACTORY. THIS WARRANTY IS IN LIEU OF ALL OTHER WARRANTIES EXPRESSED OR IMPLIED.

ELEVATION 2
SCALE: 1/16"=1'=0"

ISOMETRIC 1
SCALE: N.T.S.

ALUMINUM TOWER

UNIVERSAL TOWERS

UNIVERSAL TOWERS
A DIVISION OF
UNIVERSAL MANUFACTURING CORP.
43900 GROESBECK HWY.
CLINTON TOWNSHIP, MI 48036
PH: (586) 463-2560
FAX: (586) 463-2964

JOB NO.:

COMPONENT:
HD 8-100

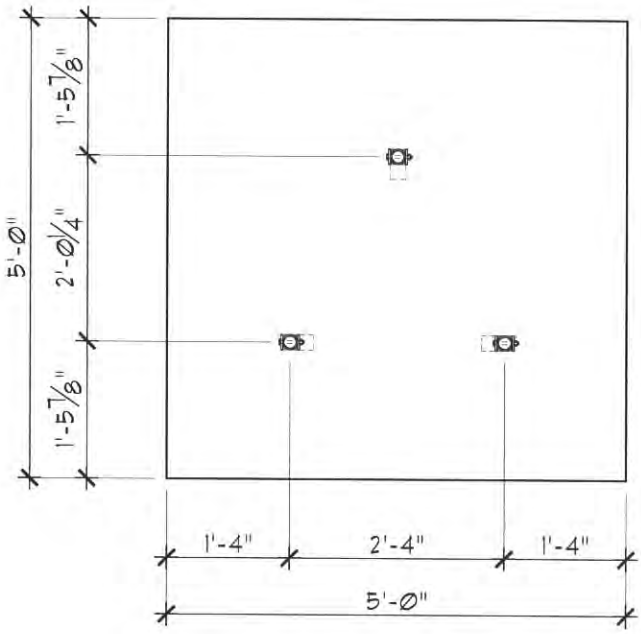

PLAN VIEW

SCALE: 1/2"=1'-0"

1

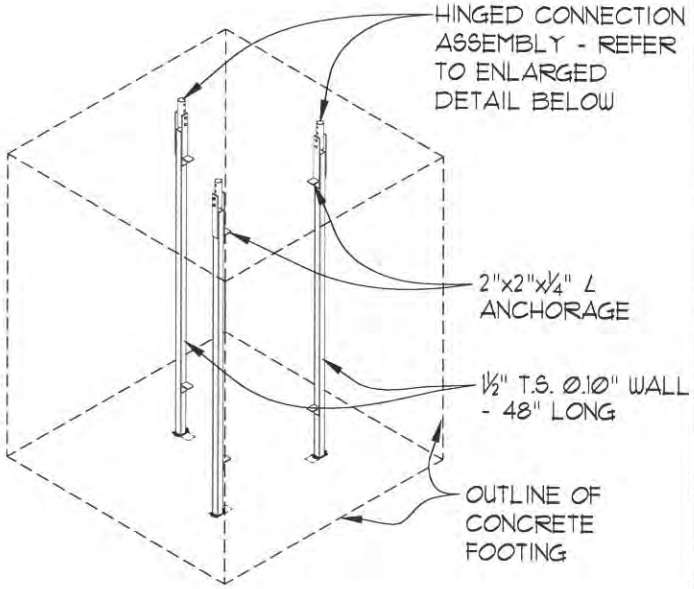

ISOMETRIC

SCALE: N.T.S.

3

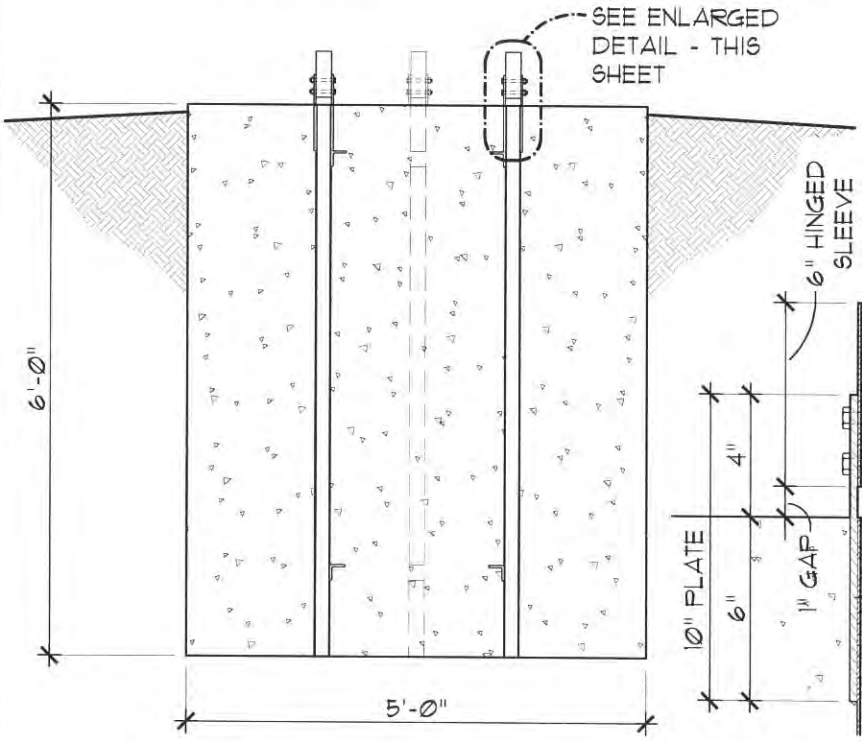

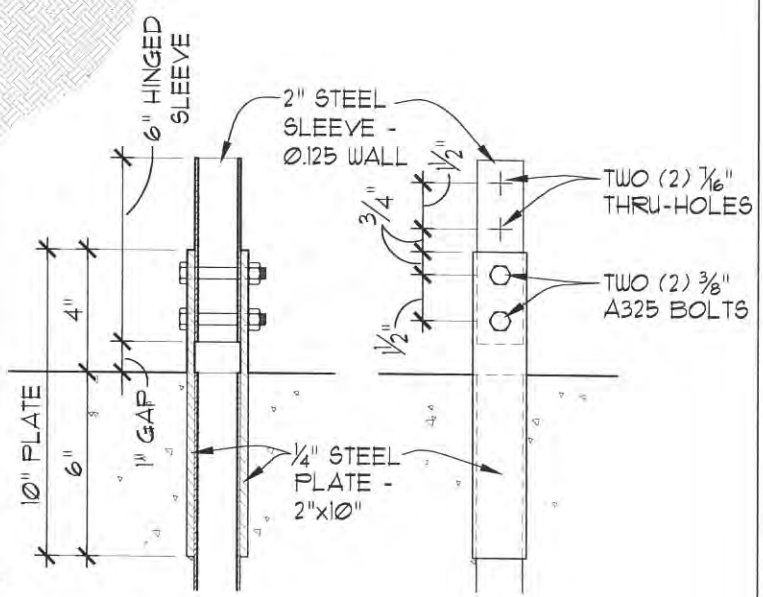

ELEVATION

SCALE: 1/2"=1'-0"

2

BASE FOOTING

UNIVERSAL TOWERS
A DIVISION OF
UNIVERSAL MANUFACTURING CORP.
43900 GROESBECK HWY.
CLINTON TOWNSHIP, MI 48036
PH: (586) 463-2560
FAX: (586) 463-2964

JOB NO.:

COMPONENT:

B-30