City of Toquerville

WATER / STREETS / PARKS & TRAILS

Impact Fee Facility Plan & Analysis

April 1, 2016

BY:
ProValue Engineering, Inc.
20 South 850 West, Suite 1
Hurricane, UT 84737

FOR:
City of Toquerville
P.O. Box 27
Toquerville, UT 84774

Contents

I. INTRODUCTION 1

II. DEMOGRAPHICS 2

A. Existing Residential Customers 2

B. Population Projections 2

C. Projected Residential Customers 2

III. IMPACT FEE FACILITIES PLAN REQUIREMENTS 4

A. STATE OF UTAH IMPACT FEE ACT 4

B. IMPACT FEE FACILITIES PLAN REQUIREMENTS 4

C. IMPACT FEE ANALYSIS REQUIREMENTS 4

D. IMPACT FEE CERTIFICATION and ENACTMENT 5

IV. LEVELS OF SERVICE 6

A. WATER SYSTEM LEVEL OF SERVICE 6

1. INDOOR USE 7

2. OUTDOOR USE 7

3. WATER RIGHTS CAPACITY 8

4. WATER SOURCE 10

5. WATER STORAGE 11

6. WATER DISTRIBUTION 11

7. EXISTING FEES 13

B. ROADS & DRAINAGE EXISTING LEVEL OF SERVICE 15

1. Roadway Infrastructure 15

2. Drainage Infrastructure 15

C. PARKS EXISTING LEVEL OF SERVICE 16

1. Parks Existing Infrastructure 16

2. Trail System Infrastructure 16

V. IMPACT FEE ANALYSIS 17

A. WATER SYSTEM IMPACT FEE ANALYSIS 17

1. PROJECTED LEVEL OF SERVICE 17

2. IMPACT FEE CALCULATION 18

B. ROADS & DRAINAGE IMPACT FEE ANALYSIS 20

1. PROJECTED LEVEL OF SERVICE 20
2. IMPACT FEE CALCULATION 21
C. PARKS & TRAILS IMPACT FEE ANALYSIS 22
1. PROJECTED LEVEL OF SERVICE 22
2. PARK & TRAILS IMPACT FEE CALCULATION 24
VI. CONCLUSION 26
CERTIFICATION 27
PUBLIC NOTICE OF INTENT 28
REFERENCES 29
APPENDICES
Appendix A: UTAH IMPACT FEE ACT
Appendix B: WATER SYSTEM MAPS
Appendix C: ROADWAY SYSTEM MAP
Appendix D: PARK & TRAILS MAPS
Appendix E: SPREADSHEET TABLES OF IMPACT FEE ANALYSIS
Appendix F: SUPPORTING DOCUMENTATION
Appendix G: TOQUERVILLE FACILITY PLAN PROJECT DETAIL SHEETS

I. INTRODUCTION

The City of Toquerville is located about 30 miles south of Cedar City and less than 20 miles north of St. George. It lies in a valley made up of converging drainages of Ash Creek and La Verkin Creek. The elevation of the City varies from 3040 feet in the South Ash Creek residences to 3800 feet at the residences along Anderson Junction.

Ten miles to the northwest of Toquerville are the Pine Valley Mountains. To the south is La Verkin City and the City of Hurricane. State Highway 17 runs through the center of town. This highway is used by tourists to access the National Parks and recreation areas to the East. Toquerville is one of the gateways to eastern Washington County.

Toquerville is located in the upper reaches of the Mohave Desert and has a typical "high desert" climate. Summers are hot and dry, with daytime temperatures reaching 105 degrees and nighttime temperatures around 70 degrees. Spring and autumn temperatures are very comfortable. Winters are mostly mild, with nighttime temperatures averaging about 30 degrees and daytime temperatures in the upper 50's to 60's.

The City has good water available from springs about a mile above town. The water from the springs is used for culinary and irrigation. This water has helped the City sustain itself as an agricultural, gardening, and fruit community. The City has 3 parks and over 12 miles of paved streets and graveled roads.

The City has chosen to complete this impact fee facilities plan and impact fee calculation to find out the current level of service of all 3 facilities (water, parks, and streets) and determine a fair impact fee to assess new residential and/or commercial building units. The City shall ensure that any imposed impact fees comply with the requirements of Utah Code - Chapter 11-36a “Impact Fees Act.”

A copy of this act is located in Appendix A.

II. DEMOGRAPHICS

The following subsections help define the existing and future demographics for Toquerville City. The best way to know how many residences exist in the City is to use the number of customers that pay for culinary water. To project the number of customers the State of Utah has current census and population projections for the City. Both of these are used to define the current and future demographics for the City.

A. Existing Residential Customers

The City of Toquerville currently has approximately 495 users that are tied to the culinary water system. Using this figure can give a good indication of the number of homes the City has.

B. Population Projections

The growth rate between the year 2000 and the year 2010 was 5%. The projected growth rate used by the State of Utah for the next twenty years is 3.87%.

Table II-B
Population Projections

YEAR	POPULATION
2000 Census:	910
2010 Census:	1,370
2016 (DEA estimate)	1,635
2020 (DEA estimate)	1,952
2026 (DEA estimate)	2,331
2030 (DEA estimate)	2,783
2036 (DEA estimate)	3,203
2040 (DEA estimate)	3,687

C. Projected Residential Customers

By using the existing equivalent residential connections of 515 and the projected growth rate of 3.87%, the number of users that Toquerville will have in the future can be projected. This will project the number of users found in Table II-C.

Table II-C
Projected Equivalent Residential Connections (ERC's)

Year	POPULATION	USERS
2014	1,582	515
2015	1,635	533
2016	1,698	553
2017	1,762	574
2018	1,825	595
2019	1,889	615
2020	1,952	636
2021	2,028	661
2022	2,104	685
2023	2,179	710
2024	2,255	735
2025	2,331	759
2026	2,421	789
2027	2,512	818
2028	2,602	848
2029	2,693	877
2030	2,783	907
2031	2,867	934
2032	2,951	961
2033	3,035	989
2034	3,119	1,016
2035	3,203	1,043
2036	3,300	1,075
2037	3,397	1,106
2038	3,493	1,138
2039	3,590	1,169
2040	3,687	1,201

III. IMPACT FEE FACILITIES PLAN REQUIREMENTS

A. STATE OF UTAH IMPACT FEE ACT

The State of Utah Code Chapter 11-36a contains all the requirements for the City to impose an impact fee. (See appendix A). "Impact fee" means a payment of money imposed upon new development activity as a condition of development approval to mitigate the impact of the new development on public infrastructure. "Impact fee" does not mean a tax, a special assessment, a building permit fee, a hookup fee, a fee for project improvements, or other reasonable permit or application fee. The City may only establish impact fees for those public facilities listed in the chapter. They are:

- Water Rights, Water Supply, Water Treatment, Water Storage, and Water Distribution Facilities
- Storm Water, Drainage, and Flood Control Facilities
- Roadway Facilities
- Parks, Recreation Facilities, Open Space, and Trails

The Impact Fee Facilities Plan will contain 4 parts. They are the elements required for an impact fee facilities plan, fees generated from an impact fee analysis, certification and enactment of the impact fees.

B. IMPACT FEE FACILITIES PLAN REQUIREMENTS

The State requires local political subdivisions to prepare an impact fee facilities plan to determine the public facilities required to serve development resulting from new development activity. The City is a local political subdivision. The State has placed in its code that if "a local political subdivision or a private entity with a population, or serving a population, of less than 5,000 as of the last federal census that charges impact fees of less than $250,000 annually need not comply with the impact fee facilities plan requirements of this part, but shall ensure that the impact fees that the local political subdivision or private entity imposes are based upon a reasonable plan that otherwise complies with the common law and the code; and each applicable notice required by the code is given." See section 11-36a-301.

The impact fee facilities plan shall identify the existing level of service, establish a proposed level of service, identify any excess capacity to accommodate future growth at the proposed level of service, and identify the means by which the City will meet those growth demands. The proposed level of service may diminish or equal the existing level of service. The City shall generally consider all revenue sources to finance the impacts on system improvements and these include grants, bonds, interfund loans, impact fees, and anticipated or accepted dedications of system improvements. All proposed levels of service will generate a Capital Improvements list of projects for each facility analyzed.

C. IMPACT FEE ANALYSIS REQUIREMENTS

After the facilities plan has identified the existing level of service and proposed level of service, an impact fee analysis shall be prepared within. It shall:

- Identify the anticipated impact on or consumption of any existing capacity of a public facility by the anticipated development activity;

- Identify the anticipated impact on system improvements required by the anticipated development activity to maintain the established level of service for each public facility;
- Estimate the share of costs for existing capacity that will be recouped and the costs of impacts to the system improvements that are related to the new development activity.
- Calculate the impact fee for each facility.

D. IMPACT FEE CERTIFICATION and ENACTMENT

The Impact fee facilities plan shall include a written certification from the person or entity that prepares the impact fee facilities plan. It shall follow section 11-36a-306 of the Impact Fee Act. The words required for this certification is in this section.

The City is required to enact these impact fees by:

- Providing the public with a notice of intent to prepare an impact fee facilities plan
- Providing the public with a notice to adopt or amend an impact fee facilities plan
- Providing the public with a notice of intent to prepare an impact fee analysis
- Providing the public with a notice to adopt impact fee enactment

There are provisions required within the impact fee enactment. The provisions required are:

- A provision establishing one or more service areas within which the local political subdivision or private entity calculates and imposes impact fees for various land use categories;
- A schedule of impact fees for each type of development activity that specifies the amount of the impact fee to be imposed for each type of system improvement or the formula that the local political subdivision or private entity, as the case may be, will use to calculate each impact fee;
- A provision authorizing the local political subdivision or private entity, as the case may be, to adjust the standard impact fee at the time the fee is charged to respond to unusual circumstances in specific cases or a request for a prompt and individualized impact fee review for the development activity of the state, a school district, or a charter school and an offset or credit for a public facility for which an impact fee has been or will be collected and ensure that the impact fees are imposed fairly;
- A provision governing calculation of the amount of the impact fee to be imposed on a particular development that permits adjustment of the amount of the impact fee based upon studies and data submitted by the developer.

IV. LEVELS OF SERVICE

A. WATER SYSTEM LEVEL OF SERVICE

The State of Utah Rules for Public Drinking Water Systems contains Minimum Sizing Requirements under section R309-510 that are used to analyze the capacity of Toquerville's culinary water system. The three primary areas of concern that section R309-510 deals with are source, storage, and distribution system capacity. This section states that source capacity must meet peak daily flow and average yearly flow requirements. It states that storage capacity must meet or exceed average daily flow requirements, which include fire flow storage. Lastly, it states that the distribution system must have the capacity to handle peak instantaneous flows and fire flows with a minimum of 20 psi pressure occurring in the system at all points.

The 2012 International Fire Code, Appendix B, contains quantity requirements for minimum fire flow and flow duration for One- and Two-Family Dwellings and dwellings in excess of 3,600 square feet. The requirements in the code will affect the water storage and distribution system requirements. The Code requires storage capacity for a 2 hour fire flow of 1,000 g.p.m. for a one-to two dwelling home, which amounts to 120,000 gallons, and a 2 hour fire flow of 1,500 G.P.M. for a building over 3,600 square feet, which amounts to 180,000 gallons. Since the City has buildings with over 3,600 square feet, the City should have at least 180,000 gallons of storage capacity for fire protection.

The following table summarizes the quantity requirements taken from the two documents referenced above. Another important component of the water system that is added to the table and is analyzed in this plan is Water Right. The water right capacity will depend on the average daily flow for indoor use and average yearly flow for outdoor use.

Table IV-A
Quantity Requirements

Water System Component	Indoor Use	Outdoor Use	Fire Flow Requirement
Water Right	SYSTEM AVERAGE per ERC or 400 GPD	SYSTEM AVERAGE per ERC or 3.26 Acre-ft/Yr per Irr. Acre	none
Water Source	800 GPD per ERC	4.9 GPM per Irrigation Acre	none
Water Storage	400 GPD per ERC	4,964 Gallons per Irrigation Acre	180,000 gallons
Distribution	$10.8*N^{0.64}$	9.8 GPM per Irrigation Acre	1,500 GPM minimum(1)

(1) Required Fire Flow for one-two dwelling home greater than 3,600 square feet at Fire Hydrant.
GPD = Gallons per Day.
GPM = Gallons per Minute.
ERC = Equivalent Residential Connection.
N = Number of Equivalent Residential Connections.

1. INDOOR USE

The City currently has 495 equivalent residential connections. Using table II-C, Projected Equivalent Residential Connections, and estimated figures for Boarding Houses & Truck Stops, the following table calculates the number of connections the City will have for the years 2026 and 2036.

Table IV-B
Equivalent Residential Connections (ERC)

YEAR➔	2016		2026		2036	
User	Units	ERC	Units	ERC	Units	ERC
Residential (Connections)	515	515	759	759	1042	1,042
Boarding House (50 gpd per resident and employee)	80	5	160	10	320	20
Commercial, Truck Stop (10 gallons per vehicle served)	0	0	640	8	1200	15
Total ERC		520		777		1,077
ERC = Equivalent Residential Connection						

2. OUTDOOR USE

For the analysis of water rights, source, storage and distribution, quantities for outdoor use are combined with indoor use and fire flow requirements. The majority of the City gets its water from the Washington County Water Conservancy District for irrigation use. The Conservancy District owns and maintains the irrigation system. The District assesses the users through property taxes. The area of Toquerville Heights and about 22 homes on Westfield Road from Lake Lane to Grassy Lane are not connected to an irrigation system. Due to the fact that the majority of the residents in Toquerville Heights has xeriscaping, it is assumed that each residential connection in Toquerville Heights and Westfield Road has an average of 0.10 acres of land that is irrigated with culinary water. The table below shows the estimated acres of irrigated land in Toquerville.

Table VI-C
Irrigated Acres

YEAR➔	2016		2026		2036	
Culinary	ERC	Acres	ERC	Acres	ERC	Acres
Irrigation	92	9.2	122	12.2	152	15.2
ERC = Equivalent Residential Connection						

There are approximately 20 more residential units that could be built in the Toquerville Heights area. When others build that are not next to an irrigation line, they will use culinary water for irrigation. The table assumes these additional users for the years 2026 and 2036.

3. WATER RIGHTS CAPACITY

a. Existing Water Rights

The City of Toquerville receives its water for municipal use from Toquerville Springs. Toquerville Springs is located at a point North 2125 feet and East 735 feet from the south quarter corner of section 35, Township 40 South, Range 13 West, SLB&M, Washington County, Utah. A copy of these water rights can be found in Appendix C. Table IV-D below shows the water rights that Toquerville has.

Table IV-D
Water Rights

WATER RIGHT NO.	TYPE OF RIGHT	TYPE OF USE	POINT OF DIVERSION	SOURCE	PERIOD OF USE	FLOW
81-3474	1862 Priority	Municipal	Toquerville Springs, S1/4 Corner, Section 35, T40S, R13W, SLB&M	Toquerville Springs	Jan. 1 to Dec. 31	12.384 acre-feet
81-3475	1862 Priority	Municipal	Toquerville Springs, S1/4 Corner, Section 35, T40S, R13W, SLB&M	Toquerville Springs	Jan. 1 to Dec. 31	67.44 acre-feet
81-3476	1862 Priority	Municipal	Toquerville Springs, S1/4 Corner, Section 35, T40S, R13W, SLB&M	Toquerville Springs	Jan. 1 to Dec. 31	93.12 acre-feet
81-4063	1862 Priority	Municipal	Toquerville Springs, S1/4 Corner, Section 35, T40S, R13W, SLB&M	Toquerville Springs	Jan. 1 to Dec. 31	3.84 acre-feet
81-3546	1862 Priority	Municipal	Toquerville Springs, S1/4 Corner, Section 35, T40S, R13W, SLB&M	Toquerville Springs	Jan. 1 to Dec. 31	0.5 cfs or 361.98 acre-feet
81-2739	1880 Priority	Municipal	Toquerville Springs, S1/4 Corner, Section 35, T40S, R13W, SLB&M	Toquerville Springs	Jan. 1 to Dec. 31	0.057 cfs or 18.57 AF
Total						538.764 acre-feet

The City also has a water right 81-2739 of 18.58 acre-feet, application a21414 had a proof and extension of time filed on March 30, 2012. The 538.764 acre-feet is equivalent to 334 gallons per minute.

b. Analysis of Water Rights

The water rights that Toquerville needs now and in the future can be estimated by using the quantity requirements for water rights from section III-A or using records of water usage. The City has record of the water usage from the meter readings that have been recorded each month. Table IV-E contains the record of readings from the month of January 2011 to December 2011 for a one year period.

Table IV-E
Current Water Usage

Month	Meters Read	Gallons of Usage	Acre-Feet of Usage	Gallons per day/ User
Jan, 2011	408	2,576,772	7.91	204
Feb, 2011	405	2,483,098	7.62	219
Mar, 2011	425	2,906,772	8.92	221
Apr, 2011	426	3,458,243	10.61	271
May, 2011	414	3,612,818	11.09	282
June, 2011	424	5,259,497	16.14	413
July, 2011	428	5,126,713	15.73	386
Aug, 2011	429	6,839,370	20.99	514
Sept, 2011	418	3,776,615	11.59	301
Oct, 2011	413	4,037,576	12.39	315
Nov, 2011	426	3,042,161	9.34	238
Dec, 2011	422	2,971,900	9.12	227
		ANNUAL	**141.45**	**299**

The City currently uses less than the State requirement suggests per user for indoor use. The State estimates that each user will use 400 gallons per day for indoor use and 3.26 acre-feet per year per irrigated acre for outdoor usage. The water rights will be analyzed by using 300 gallons per user for indoor use and the 3.26 AF/Year per irrigated acre for outdoor use. Table IV-F contains the requirements for water right for the years 2016, 2026 and 2036.

Table IV-F
Water Right Requirements

YEAR➔	2016		2026		2036	
USE	Units	G.P.M.	Units	G.P.M.	Units	G.P.M.
Indoor Unit =ERC	520	108	777	162	1,077	224
Outdoor Unit=Acres	9.2	19	12.2	25	15.2	31
TOTAL GPM		127		187		255
Total Acre-Feet/Year		205		301		412
ERC = Equivalent Residential Connection G.P.M. = Gallons per Minute						

Currently, Toquerville has 539 acre-feet of water right. Using the calculations from the table above, the City should have enough water from the water rights at Toquerville Springs for the year 2036. If more water is used, the need for more water is solved through the Local agreement that the City has with the Washington County Water Conservancy District. An amendment to this agreement is located in Appendix C with the water rights. This agreement is called the Regional Water Supply Agreement.

The Regional Water Supply Agreement gives the City entitlement to 225 gallons per minute from the Toquerville Springs. If the City exceeds this amount, it will have to pay the District 84 cents per thousand gallons pumped that is beyond this figure.

4. WATER SOURCE

a. Existing Water Source

Toquerville currently gets its water from Toquerville Springs. The water from these springs is shared by the Washington County Water Conservancy District, City of Hurricane, and the City of La Verkin. The City has two (2) – 400 gallon per minute pumps that pump water from the springs, through the chlorinator, and up to the Springs Tank and Westfield Tank.

For Anderson Junction, the City buys water from the Washington County Water Conservancy District. This water comes from the Cottam Well source that is located just southwest of the Junction.

b. Analysis of Water Source

Quantity requirements from section IV-A are used to estimate the required water source capacity for Toquerville. The required source will be calculated using a peak daily flow requirement of 800 gallons per day per ERC for indoor use and 4.9 gallons per minute per irrigated acre for outdoor use. Calculations of source capacity are displayed for the respective year in Table III-G below.

Table IV-G
Water Source Requirements

YEAR➔	2016		2026		2036	
USE	Units	G.P.M.	Units	G.P.M.	Units	G.P.M.
Indoor Unit =ERC	520	289	777	432	1,077	598
Outdoor Unit=Acres	9.2	45	12.2	60	15.2	74
TOTAL		334		491		673
ERC = Equivalent Residential Connection G.P.M. = Gallons per Minute						

With both pumps running in 2036, the City could have plenty of pumping capacity to pump to the tanks. However, a third pump should be installed at a later date and serve as a back-up pump to the two pumps. This need will warrant a need for an impact fee for an additional 400 gallon per minute pump.

5. WATER STORAGE

a. Existing Water Storage

Presently, the City currently has 1,250,000 gallons of main storage in the main part of Toquerville and 500,000 gallons on the Anderson Junction system. The main section of the City has a 250,000 gallon concrete tank called the Springs Tank, a 500,000 gallon steel tank called the Westfield Tank and a 500,000 gallon concrete tank called the Trail Ridge Tank.
For the Anderson Junction water system, the Anderson Junction tank is a 500,000 gallon steel tank.

b. Analysis of Water Storage

The required water storage capacity for indoor use, outdoor use, and fire flow is shown in the table IV-H below. Storage requirements from section III-A were used to calculate the required water storage capacity.

Table IV-H
Water Storage Requirements

YEAR➔	2016		2026		2036	
USE	Units	G.P.D.	Units	G.P.D.	Units	G.P.D.
Indoor Unit =ERC	520	213,029	777	310,800	1,077	430,800
Outdoor Unit=Acres	9.2	45,669	12.2	60,561	15.2	75,453
Fire Flow		180,000		180,000		180,000
TOTAL		438,698		551,361		686,253
ERC = Equivalent Residential Connection G.P.D. = Gallons per Day						

The combined storage capacity of 1,750,000 gallons is plenty of storage for the next twenty years. The existing system storage exceeds the required storage.

6. WATER DISTRIBUTION

a. Existing Water Distribution

The current distribution system contains 22 miles of pipeline, 137 fire hydrants, 200 valves, and close to 500 water meters. There are 2 separate distribution systems in Toquerville. There is the main system that covers the main part of Toquerville from the Springs Tank south to Litchfield Pond's and from the Westfield tank to the east at Trail Ridge Estates. The other system is the Anderson Junction system that is located on the Interstate-15 freeway at milepost 27 (Anderson Junction).

b. Analysis of System

A computer network analysis of the Toquerville existing distribution system was completed using peak instantaneous flows and then running scenarios of fire flows with peak instantaneous flows.

The water distribution system should have the capacity to deliver the combined distribution requirements of table IV-A, which are peak instantaneous indoor and outdoor flows combined with fire flow. The system should be required to maintain a residual pressure of 20 p.s.i. in the distribution lines. These flows were used to analyze the distribution system and are shown in Table IV-I.

Table IV-I
Peak Instantaneous Flow Requirements

YEAR➔	2016		2026		2036	
	Units	G.P.M.	Units	G.P.M.	Units	G.P.M.
Indoor Use (ERC)	520	591	777	764	1,077	942
Outdoor Use (Acres)	9.2	90	12.2	120	15.2	149
Fire Flow		1,500		1,500		1,500
TOTAL		2,181		2,384		2,591
ERC = Equivalent Residential Connection G.P.M. = Gallons per Minute						

The peak instantaneous flow requirements from this table were used to analyze the distribution system of both systems. A computer program called EPAnet2 was used to model the existing system. It calculated the available fire flows at designated points in the system when the peak instantaneous flow was imposed on the system and there was a minimum pressure of 20 p.s.i. in the distribution lines.

Twelve different scenarios were modeled in EPAnet2. The first scenario shows the pressures at each node during peak flows. Fire Flow Scenarios 1 through 12 were ran by picking a different location within the system and applying the fire flow in gallons per minute. The fire flow that created a pressure close to 20 psi at any location in the distribution system is the recorded fire flow for that scenario.

Table IV-J
Available Fire Flows at Peak Instantaneous Flows

Junction Number	Peak Instantaneous Pressure (psi)	Available Fire Flow (gpm)	@Residual Pressure (psi)	Min. Zone Pressure (psi)	@JCT Number
J9	148.1	1,264	20.0	20.0	J9
J12	180.6	1,515	20.0	20.0	J12
J18	89.51	1,020	49.4	20.1	J17
J24	161.9	1,020	76.7	20.1	J17
J34	77.6	2,025	20.1	20.1	J34
J39	70.0	2,262	20.0	20.0	J39
J49	57.6	1,399	20.0	20.0	J49
J66	61.1	1,734	20.0	20.0	J66
J80	99.9	1,800	52.9	20.1	J89
J89	32.4	918	20.0	20.0	J89
J90	82.2	1,830	51.4	20.0	J89
J118	44.6	1,605	20.0	20.0	J118

As shown above, Junction J89 at the west end of Sunset Road is at an elevation that only allows 32 pounds of pressure (psi) because it is at the highest served elevation within the distribution system. It can only handle 918 gallons per minute and it has a 10" diameter pipeline that feeds the area.

7. EXISTING FEES

Toquerville currently charges the following impact fees:

a. Water Impact Fees

The current water impact fee is $1,533 per ¾" diameter residential meter connection;
$3,500 per 1" meter connection;
$7,500 per 1-1/2" meter connection;
$14,000 per 2" meter connection;
$32,000 per 3" meter connection;
$56,000 per 4" meter connection;
$127,000 per 6" meter connection.

b. Road Impact Fees

The current street impact fee is $1,935 per residential user.

c. Park Impact Fees

The current park impact fee is $829 per residential user.

Table IV-K
Existing Impact Fees

WATER IMPACT FEE	
¾" Dia. Residential Meter	$1,533.00
1" Dia. Residential Meter	$3,500.00
1-1/2" Dia. Residential Meter	$7,500.00
2" Dia. Residential Meter	$14,000.00
STREET/DRAINAGE IMPACT FEE	
Road/Drainage Fee per Residential User	$1,935.00
PARK SYSTEM IMPACT FEE	
Park Fee per Residential User	$829.00
Total of an Average Residential User	**$4,297.00**

The existing impact fees total up to $4,297.

B. ROADS & DRAINAGE EXISTING LEVEL OF SERVICE

1. Roadway Infrastructure

The current streets in Toquerville contain shoulders that have ditches, fill slopes, or curb & gutter with or without sidewalks. There are asphalt, gravel or dirt streets. The following is an inventory of these different streets in the City:

Table IV-K
Inventory of Streets

SURFACE	FEET	MILES
ASPHALT	73,569	13.93
GRAVEL	20,859	3.95
DIRT	15,594	2.95

The different surfaces have different costs. It is recommended that Asphalt roadways be the only recommended roadway section to use for impact fee calculations.

2. Drainage Infrastructure

There is approximately 3.0 miles of underground storm drain pipe in the City and the drainage system consists of storm drain boxes, HDPE corrugated pipe, corrugated metal pipe, plastic pipe, catch basins, and drop inlets. The existing level of service for the existing storm drain pipe means that there is storm drain features on about 20% of the paved roads.

C. PARKS EXISTING LEVEL OF SERVICE

1. Parks Existing Infrastructure

Currently, there are 3 local parks in Toquerville City. There is the Almond Height Park at the south end of Westfield Road. There is the City Center Park at the west end of Center Street. There is the Trail Ridge Park in the middle of Trail Ridge Estates next to La Verkin Creek. These parks have the following amenities:

TABLE IV-L
PARK AM ENITIES

TOQUERVILLE PARKS						
	AREA	PARKING LOT	BALL PARK	BASKETBALL COURT	PLAYGROUND	RESTROOMS
ALMOND HEIGHT PARK	2.07	NO	NO	NO	NO	NO
TRAIL RIDGE PARK	4.23	YES	NO	YES	NO	NO
CITY CENTER PARK	10.32	YES	YES	YES	YES	YES
TOTAL	16.62					

The park system for the City is currently build to handle 750 residential homes. With the 16.62 acres of park, there are 45 homes per acre of park available in the City. This is the current level of service.

2. Trail System Infrastructure

There are over 24 miles of unimproved trails now in Toquerville City and these are the ones on the City's proposed trails plan. There are many more miles that are not shown on this map. There is currently about 4,000 feet of improved trails in the City.

V. IMPACT FEE ANALYSIS

A. WATER SYSTEM IMPACT FEE ANALYSIS

1. PROJECTED LEVEL OF SERVICE

Table V-A recommends the following projected level of service that will match the existing level of service:

Table V-A
EXISTING CAPACITY OF WATER SYSTEM COMPONENTS

WATER SOURCE ERC CALCS				
324000	GPD	IRR USE		
710.73	users	297.3913043	GPM	
insert in cell d12		18.6%	% users using irrigation	
WATER STORAGE ERC				
Based on Tank Capacity				
1,250,000	gal			
(180,000)	gal fire			
1,070,000	gal for users			
1,337.50	users			
insert in cell d13				
DISTRIBUTION ERC				
3.925	CFS			
1761.54	GPM			
1,432.03	users			
insert in cell d15 & d18				

The reason to have the proposed level of service be the same as the existing level of service is because the existing level of service has additional capacity to meet its' needs. This means the system today can provide enough water from the existing source, from it's storage facilities, and existing distribution system.

The Existing pumps can handle 711 users.
The Water storage capacity is set to handle 1,337.5 users.
The Distribution system is set to handle 1,432 users.

2. IMPACT FEE CALCULATION

The impact fee analysis is based on the proposed level of service for water source, water storage and water distribution. The calculation is based on the estimated construction costs for each project, summed up for the entire system and broken into each component. The price of each component is then calculated at a cost per equivalent residential connection (ERC) by dividing the cost by the number of ERC's the component can handle. This will lead to the proposed fee calculation of all 3 components. Table V-B below shows the list of Capital Improvements projects for the culinary water system and are listed from project CW-01 to CW-07. The breakdown of each of these projects is located in Appendix G.

Table V-B
Water System Projects List

TOQUERVILLE CITY LIST OF CAPITAL IMPROVEMENTS

PROJECT	LOCATION	DESCRIPTION	SIZE OR LENGTH	$/SIZE OR $/LENGTH	Construction $	Engineering	Contingency	Total
CW-01	Hillside/Cotton Gin	Replace approximately 810 feet of culinary waterline with valves, fire hydrants, meters and appurtenances.	810	$ 103.00	$ 84,000.00	$ 9,000.00	$ 9,000.00	$ 102,000.00
CW-02	Springs Tank	Replace the 500,000 gallon concrete water tank on Springs Drive along with approximately 300 feet of water pipe, air valves, gate valves and appurtenances.	250,000	$ 1.10	$ 275,000.00	$ 28,000.00	$ 28,000.00	$ 331,000.00
CW-03	Ash Creek Drive	Replace approximately 3,700 feet of 8" culinary waterline with valves, fire hydrants, meters and appurtenances.	3,700	$ 103.00	$ 382,000.00	$ 39,000.00	$ 39,000.00	$ 460,000.00
CW-04	Berry Lane	Replace approximately 380 feet of culinary waterline with valves, fire hydrants, meters and appurtenances.	380	$ 103.00	$ 40,000.00	$ 4,000.00	$ 4,000.00	$ 48,000.00
CW-05	Cholla Creek Lane	Replace approximately 5,000 feet of culinary waterline with valves, fire hydrants, meters and appurtenances.	5,000	$ 104.00	$ 520,000.00	$ 52,000.00	$ 52,000.00	$ 624,000.00
CW-06	Hunter Lane	Replace approximately 2,720 feet of culinary waterline with valves, fire hydrants, meters and appurtenances.	2,720	$ 86.00	$ 234,000.00	$ 24,000.00	$ 24,000.00	$ 282,000.00
CW-07	Westfield Tank	Replace the 500,000 gallon concrete water tank on Springs Drive along with approximately 300 feet of water pipe, air valves, gate valves and appurtenances.	550,000	$ 1.00	$ 550,000.00	$ 55,000.00	$ 55,000.00	$ 660,000.00
						CULINARY WATER TOTAL=		**$ 2,507,000.00**

The Total cost of culinary water projects is $2,507,000. Of these projects, $990,000 is for the component of water storage and $1,517,000 is for water distribution component. Table V-C contains the calculation using this figures for each component and shows the new impact fee at $1,799.27 for a ¾" residential connection.

Table V-C
Water System Impact Fee Calculation

CITY OF TOQUERVILLE WATER SYSTEM					
IMPACT FEE CALCULATION					
USER COST BREAKDOWN OF IMPACT FEES					
COMPONENT		**COST**	**ERC**	**COST PER ERC**	
#1	WATER SOURCE	$ -	711	$ -	
#2	WATER STORAGE	$ 990,000.00	1338	$ 739.91	
#3	WATER DISTRIBUTION	$ 1,517,000.00	1432	$ 1,059.36	
	TOTAL FEES	**$ 2,507,000.00**		**$ 1,799.27**	
	TOTAL IMPACT FEE			**$ 1,799.27**	PER ERC
FACTOR	**3/4" Meter Impact Fee**	**$ 1,799.27**			
1.78	**1" Meter Impact Fee**	**$ 3,198.70**			
4.00	**1-1/2" Meter Impact Fee**	**$ 7,197.07**			
7.11	**2" Meter Impact Fee**	**$ 12,794.79**			
16.00	**3" Meter Impact Fee**	**$ 28,788.29**			

The ¾" meter rate is $1,799.27. To figure out the fees for 1", 1-1/2", 2" and 3" meter sizes, the factor is used is calculated by taking the square of the meter diameter and dividing it by the square of the ¾" meter diameter.

B. ROADS & DRAINAGE IMPACT FEE ANALYSIS

1. PROJECTED LEVEL OF SERVICE

a. Roads Proposed Level of Service

The following figure shows the proposed level of service for an asphalt roadway that can be used as any planned street in the City. Costs associated with this typical section can be used to develop the impact fee for a residential street.

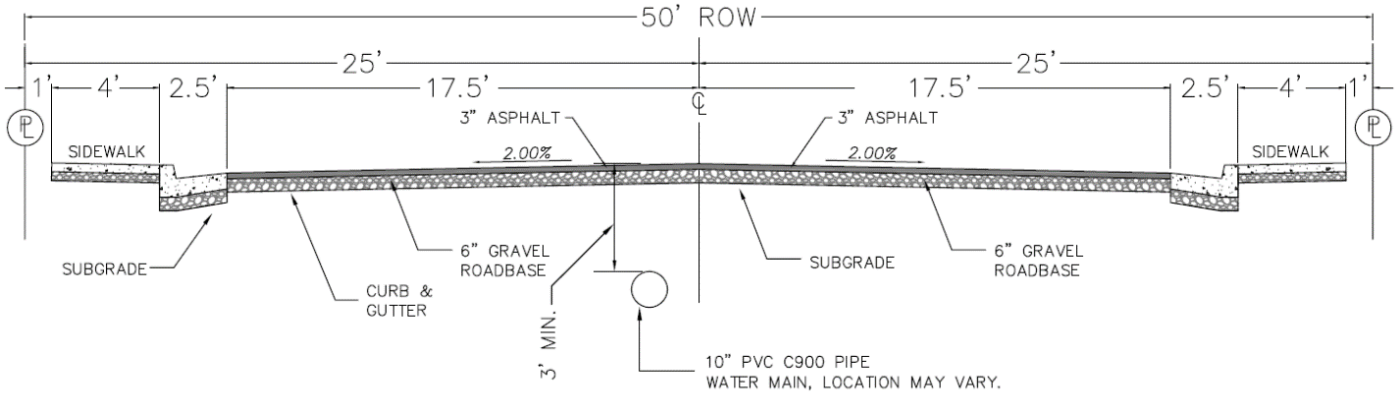

FIGURE V.B – Proposed Roadway Section for newly improved Roadways

b. Drainage Proposed Level of Service

It is proposed that newly designed roadways contain a storm drain box and 18" pipe line for at least 50% of the lineal footage of proposed roadways. Therefore, the cost for development will be half of the total price for installation along a city street. The average cost of $30.30 per foot will be cut in half to be $16.15 and used in the impact fee calculation.

2. IMPACT FEE CALCULATION

The impact fee analysis is based on the proposed level of service for the previous road section and drainage needed. A list capital improvements projects for streets and drainage are shown in Table V-D below. The calculation is based on the estimated construction costs for each project and summed up for the entire system. The breakdown of each of these projects is located in Appendix G.

Table V-D
ROAD/DRAINAGE Projects List

TOQUERVILLE CITY LIST OF CAPITAL IMPROVEMENTS

PROJECT	LOCATION	DESCRIPTION	SIZE OR LENGTH	$/SIZE OR $/LENGTH	Construction $	Engineering	Contingency	Total
ST-01	Hillside/Cotton Gin	Street Improvements needed for 1215 feet of Hillside and Cotton Gin Streets. Includes new curb & gutter, asphalt, and storm drain system.	1,215	$ 160.00	$ 194,400.00	$ 20,000.00	$ 20,000.00	$ 234,400.00
ST-02	Ash Creek Drive	Street Improvements needed for 3,700 feet of Ash Creek Drive.	3,700	$ 160.00	$ 592,000.00	$ 60,000.00	$ 60,000.00	$ 712,000.00
ST-03	Shadow Creek Lane	Street Improvements needed for 480 feet of Shadow Creek Lane	480	$ 110.00	$ 52,800.00	$ 6,000.00	$ 6,000.00	$ 64,800.00
ST-04	Hunter Lane	Street Improvements needed for 2,720 feet of Shadow Creek Lane	2,720	$ 160.00	$ 435,200.00	$ 44,000.00	$ 44,000.00	$ 523,200.00
ST-05	Toquerville Heights	Install new storm drain system to take care of Heights storm drainage need	2,222	$ 60.00	$ 133,320.00	$ 14,000.00	$ 14,000.00	$ 161,320.00
ST-06	Bypass Road	Bypass Road Improvements needed for 23,300 feet of the West Bypass Road	23,300	$ 309.00	$ 7,199,700.00	$ 720,000.00	$ 720,000.00	$ 8,639,700.00
ST-07	Springs Drive	Street Improvements needed for 2,305 feet of Springs Drive	2,305	$ 140.00	$ 322,700.00	$ 33,000.00	$ 33,000.00	$ 388,700.00
							STREETS TOTAL=	$ 10,724,120.00

The following table calculates the proposed impact fee for Roads & Drainage. It uses the 1,201 users of the projected year 2040 from the population projections of table II-C and the net City participation of $2,948,390 to calculate the impact fee of $2,454.95 per residential user.

Table V-E
ROAD/DRAINAGE Impact Fee Calculation

STREET IMPACT FEE					
TOTAL HERE WILL BE		*$ 10,724,120.00*	**TOTAL PRICE**	**$**	**2,948,390.00**
LESS UDOT PARTICIPATION ON BYPASS ROAD			**USERS**		**1,201**
OF	*$ (7,775,730.00)*	*1,201 Based of 2040 Pop. Projection*	**PRICE PER USER**	**$**	**2,454.95**

The total recommended impact fee should be $2,454.95 per user.

C. PARKS & TRAILS IMPACT FEE ANALYSIS

1. PROJECTED LEVEL OF SERVICE

a. Parks Proposed Level of Service

Many Cities use an area of 4 acres per 1000 residents to come up with an impact fee. With the City having 16.62 acres of Park, this is enough Park to serve 4,155 people. The bullets below show the figuring for the number of users to use for the impact fee calculation. With the current household population at 3.07 people per household, the number of users for the proposed level of service is 1,353.

- *PARK AREA= 4 ACRES PER 1000 RESIDENTS*
- *PARK AREA WILL SERVE 4,155 PEOPLE*
- *PEOPLE PER USER IS 3.07, SEE TABLE II-C*
- *AT 3.07 PEOPLE PER USER, THE NUMBER OF USERS IS 1353*

b. Trails Proposed Level of Service

The following is a breakdown of the lengths for unimproved trails and proposed improved trails that the City could have in the near future. This can be used for the proposed level of service. The number of users this can support will be 1,353.

Table V-F
Proposed Trail Level of Service

TOQUERVILLE TRAILS		
MASTER TRAILS	**LENGTH**	
UNIMPROVED	23.55	MILES
IMPROVED	11.00	MILES

The following figure shows the proposed level of service for an asphalt trail that can be used as any planned trail in the City. Costs associated with this typical section can be used to develop the impact fee for an average paved trail.

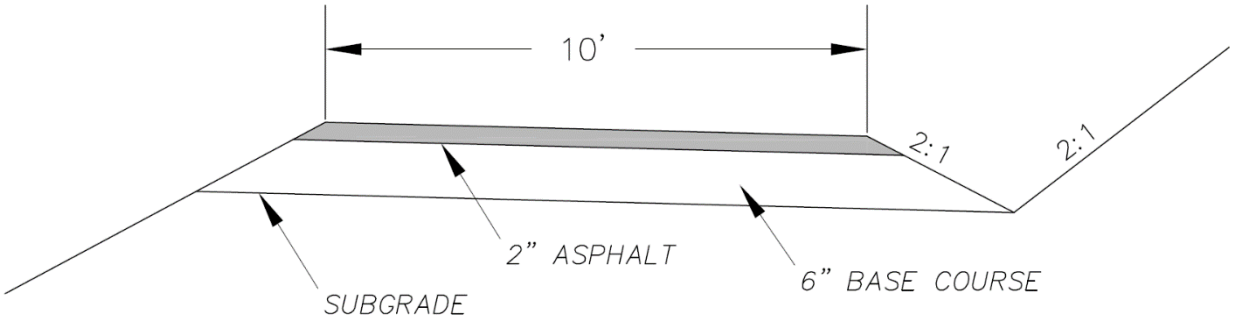

10' PROPOSED TRAIL

Figure V-C. 10' Proposed Paved Trail

2. PARK & TRAILS IMPACT FEE CALCULATION

a. Park Impact Fee Calculation

The Capital Improvements list for parks is shown in the table below. The total number of projects is 3 and the price of improvements totals $2,995,000. The breakdown of each of these projects is located in Appendix G.

Table V-G
Park Projects List

TOQUERVILLE CITY LIST OF CAPITAL IMPROVEMENTS

PROJECT	LOCATION	DESCRIPTION	SIZE OR LENGTH	$/SIZE OR $/LENGTH	Construction $	Engineering	Contingency	Total
PK-01	Toquerville City Park	Site improvements for 10.32 acres of Park to include infrastructure and amenities	10.32	$150,000.00	$ 1,548,000.00	$ 155,000.00	$ 155,000.00	$ 1,858,000.00
PK-02	Trail Ridge Park	Site improvements for 4.23 acres of Park to include infrastructure and amenities	4.23	$150,000.00	$ 634,500.00	$ 64,000.00	$ 64,000.00	$ 762,500.00
PK-03	Almond Heights Park	Site improvements for 2.07 acres of Park to include infrastructure and amenities	2.07	$150,000.00	$ 310,500.00	$ 32,000.00	$ 32,000.00	$ 374,500.00
							PARKS TOTAL =	**$ 2,995,000.00**

The Park Impact Fee was calculated by pricing the proposed level of service in the table below. The total price for projects is $2,995,000 and will serve 1,353 residential users.

Table V-H
Park Cost Impact Fee Calculation

PARKS IMPACT FEE		
PARK AREA= 4 ACRES PER 1000 RESIDENTS	**TOTAL PRICE**	**$ 2,995,000.00**
PARK AREA WILL SERVE 4,155 PEOPLE	**USERS**	**1,353**
PEOPLE PER USER IS 3.07, SEE TABLE II-C	**PRICE PER USER**	**$ 2,213.60**
AT 3.07 PEOPLE PER USER, THE NUMBER OF USERS IS 1353		

The recommended park impact fee is calculated to be $2,213.60 for an average residential user.

b. Trails Impact Fee Calculation

The following table breaks down the Capital improvements projects for trails. It shows 4 trails that will cost an estimated $2,606,000. The breakdown of each of these projects is located in Appendix G.

Table V-J
Trail Projects List

TOQUERVILLE CITY LIST OF CAPITAL IMPROVEMENTS

PROJECT	LOCATION	DESCRIPTION	SIZE OR LENGTH	$/SIZE OR $/LENGTH	Construction $	Engineering	Contingency	Total
TR-01	Bypass Road Trail	Bypass trail Improvements needed for 23,300 feet of the trail along the Bypass Route.	23,300	$ 40.00	$ 932,000.00	$ 94,000.00	$ 94,000.00	$ 1,120,000.00
TR-02	Hunter - Hwy Trail	Asphalt trail Improvements needed for 6,700 feet of the trail along the Hunter and Highway 17.	6,700	$ 40.00	$ 268,000.00	$ 27,000.00	$ 27,000.00	$ 322,000.00
TR-03	Anderson Jct Trail	Asphalt trail Improvements needed for 14,300 feet of the trail along Highway 17 from Toquerville to Anderson Junction	14,300	$ 40.00	$ 572,000.00	$ 58,000.00	$ 58,000.00	$ 688,000.00
TR-04	Frontage Road Trail	Asphalt trail Improvements needed for 9,900 feet of the trail along the I-15 frontage road.	9,900	$ 40.00	$ 396,000.00	$ 40,000.00	$ 40,000.00	$ 476,000.00
							TRAILS TOTAL =	**$ 2,606,000.00**

The Trails Impact fee was calculated by pricing the proposed level of service in the table below. The total price for projects is $2,606,000 and will serve 1,201 residential users based on the 2040 population projections.

Table V-K
Trails Impact Fee Calculation

TRAILS IMPACT FEE		
1,201 Based of 2040 Pop. Projection	**TOTAL PRICE**	**$ 2,606,000.00**
	USERS	**1,201**
	PRICE PER USER	**$ 2,169.86**

The recommended trail impact fee is calculated to be $2,169.86 for an average residential user.

VI. CONCLUSION

On April 28, 2015, the City Council had a work meeting to discuss the proposed impact fees. It was determined to round the impact fees down to the next 5 number digit. Therefore, the impact fee calculated at $1,799.27 for a ¾" Dia. Residential Meter becomes $1,795.00. The impact fees for Road/Drainage, Parks/Trails and Water System are shown in the following Table VI:

Table VI
Recommended Impact Fees

WATER IMPACT FEE	
¾" Dia. Residential Meter	$1,795.00
1" Dia. Residential Meter	$3,195.00
1-1/2" Dia. Residential Meter	$7,195.00
2" Dia. Residential Meter	$12,790.00
STREET/DRAINAGE IMPACT FEE	
Road/Drainage Fee per Residential User	$2,450.00
PARK SYSTEM IMPACT FEE	
Park Fee per Residential User	$2,210.00
Trail Fee per Residential User	$2,165.00
Total of an Average Residential User	**$8,620.00**

The recommended water impact fee is:
$1,795.00 per ¾" diameter residential meter connection;
$3,195.00 per 1" meter connection;
$7,195.00 per 1-1/2" meter connection;
$12,790.00 per 2" meter connection;

The recommended Street/Drainage impact fee is: $2,450.00 per residential user.

The recommended Park impact fee is: $2,210.00 per residential user.

The recommended Trail impact fee is: $2,165.00 per residential user.

It is recommended that the average residential lot will be expected to pay $8,620.00 for impact fees to cover water, streets, parks and trail impacts.

If a developer installs any items that impact fees would help pay for, the developer should be given a credit which must be calculated, presented to the City and is mutually agreed upon.

CERTIFICATION

"I, Karl B. Rasmussen, certify that the attached impact fee facilities plan and impact fee analysis:

1. Includes only the costs of public facilities that are:
    a. allowed under the Impact Fees Act; and
    b. actually incurred; or
    c. projected to be incurred or encumbered within six years after the day on which each impact fee is paid;
2. Does not include:
    a. costs of operation and maintenance of public facilities;
    b. costs for qualifying public facilities that will raise the level of service for the facilities, through impact fees, above the level of service that is supported by existing residents; or
    c. an expense for overhead, unless the expense is calculated pursuant to a methodology that is consistent with generally accepted cost accounting practices and the methodological standards set forth by the federal Office of Management and Budget for federal grant reimbursement; and
3. Offsets costs with grants or other alternate sources of payment; and
4. Complies in each and every relevant respect with the Impact Fees Act."

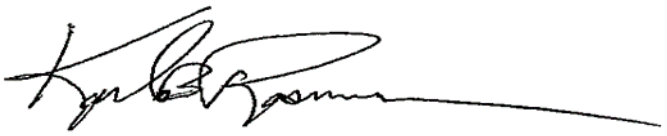

April 14, 2016

Karl B. Rasmussen, P.E. DATE

PUBLIC NOTICE OF INTENT

Toquerville:
Toquerville City Council

Search again

Entity: Toquerville

Body: Toquerville City Council

Subject: Public Meetings

Notice Title: 04-14-16 Public Hearing

Notice Type: Hearing

Event Start Date & Time: April 30, 2016 6:00 PM

Description/Agenda:

TOQUERVILLE CITY COUNCIL
April 14, 2016
Held at 212 N. Toquerville Blvd,
Toquerville Utah, 84774
NOTICE OF PUBLIC HEARING

A PUBLIC HEARING WILL BE HELD DURING REGULAR CITY COUNCIL MEETING CONVENING AT 6:00 PM:

1. Resolution 2016.06 - Budget Amendment for Fiscal Year 2016
2. Toquerville City Capital Facilities Plan and Impact Fee Study - An Impact Fee Facilities Plan, Impact Fee Analysis and Impact Fees for Enactment for Water, Roads & Drainage, Parks and affiliated Trails within the entire City Limits of Toquerville City, Washington County, Utah. A copy of the plan and analysis can be viewed at 212 N. Toquerville Blvd. beginning April 4th.)

REGULAR MEETING WILL CONVENE AT APPROXIMATELY 6:00 P.M.
In compliance with the Americans with Disabilities Act, individuals needing special accommodations (including auxiliary communicative aids and services) during this meeting should notify Coleen Orth at the City Office 635-1094, at least 48 hours in advance. This Notice will be published at least 10 days prior to the Public Hearing in the Spectrum newspaper, posted on the State website at http://pmn.utah.gov,

REFERENCES

Utah DDW – 2010 MAGI by city:
http://www.drinkingwater.utah.gov/documents/engineering/MAGI_2010_city.htm

Utah DDW – R309-510 Facility Design and Operation: Minimum Sizing Requirements
http://www.drinkingwater.utah.gov/documents/rules_ddw_version/R309-510_4-27-09.htm

Utah DEA Growth Projections:
http://gomb.utah.gov/budget-policy/demographic-economic-analysis/

Utah State Legislature, Utah Code, Impact Fees Act, Chapter 36a
http://le.utah.gov/xcode/Title11/Chapter36A/11-36a.html?v=C11-36a_1800010118000101

APPENDIX A

UTAH IMPACT FEE ACT

11-36a-101. Title.

This chapter is known as the "Impact Fees Act."

Enacted by Chapter 47, 2011 General Session

11-36a-102. Definitions.

As used in this chapter:

(1) (a) "Affected entity" means each county, municipality, local district under Title 17B, Limited Purpose Local Government Entities - Local Districts, special service district under Title 17D, Chapter 1, Special Service District Act, school district, interlocal cooperation entity established under Chapter 13, Interlocal Cooperation Act, and specified public utility:

(i) whose services or facilities are likely to require expansion or significant modification because of the facilities proposed in the proposed impact fee facilities plan; or

(ii) that has filed with the local political subdivision or private entity a copy of the general or long-range plan of the county, municipality, local district, special service district, school district, interlocal cooperation entity, or specified public utility.

(b) "Affected entity" does not include the local political subdivision or private entity that is required under Section 11-36a-501 to provide notice.

(2) "Charter school" includes:

(a) an operating charter school;

(b) an applicant for a charter school whose application has been approved by a charter school authorizer as provided in Title 53A, Chapter 1a, Part 5, The Utah Charter Schools Act; and

(c) an entity that is working on behalf of a charter school or approved charter applicant to develop or construct a charter school building.

(3) "Development activity" means any construction or expansion of a building, structure, or use, any change in use of a building or structure, or any changes in the use of land that creates additional demand and need for public facilities.

(4) "Development approval" means:

(a) except as provided in Subsection (4)(b), any written authorization from a local political subdivision that authorizes the commencement of development activity;

(b) development activity, for a public entity that may develop without written authorization from a local political subdivision;

(c) a written authorization from a public water supplier, as defined in Section 73-1-4, or a private water company:

(i) to reserve or provide:

(A) a water right;

(B) a system capacity; or

(C) a distribution facility; or

(ii) to deliver for a development activity:

(A) culinary water; or

(B) irrigation water; or

(d) a written authorization from a sanitary sewer authority, as defined in Section 10-9a-103:

(i) to reserve or provide:

(A) sewer collection capacity; or

(B) treatment capacity; or

(ii) to provide sewer service for a development activity.

(5) "Enactment" means:

(a) a municipal ordinance, for a municipality;

(b) a county ordinance, for a county; and

(c) a governing board resolution, for a local district, special service district, or private entity.

(6) "Encumber" means:

(a) a pledge to retire a debt; or

(b) an allocation to a current purchase order or contract.

(7) "Hookup fee" means a fee for the installation and inspection of any pipe, line, meter, or appurtenance to connect to a gas, water, sewer, storm water, power, or other utility system of a municipality, county, local district, special service district, or private entity.

(8) (a) "Impact fee" means a payment of money imposed upon new development activity as a condition of development approval to mitigate the impact of the new development on public infrastructure.

(b) "Impact fee" does not mean a tax, a special assessment, a building permit fee, a hookup fee, a fee for project improvements, or other reasonable permit or application fee.

(9) "Impact fee analysis" means the written analysis of each impact fee required by Section 11-36a-303.

(10) "Impact fee facilities plan" means the plan required by Section 11-36a-301.

(11) "Level of service" means the defined performance standard or unit of demand for each capital component of a public facility within a service area.

(12) (a) "Local political subdivision" means a county, a municipality, a local district under Title 17B, Limited Purpose Local Government Entities - Local Districts, or a special service district under Title 17D, Chapter 1, Special Service District Act.

(b) "Local political subdivision" does not mean a school district, whose impact fee activity is governed by Section 53A-20-100.5.

(13) "Private entity" means an entity in private ownership with at least 100 individual shareholders, customers, or connections, that is located in a first, second, third, or fourth class county and provides water to an applicant for development approval who is required to obtain water from the private entity either as a:

(a) specific condition of development approval by a local political subdivision acting pursuant to a prior agreement, whether written or unwritten, with the private entity; or

(b) functional condition of development approval because the private entity:

(i) has no reasonably equivalent competition in the immediate market; and

(ii) is the only realistic source of water for the applicant's development.

(14) (a) "Project improvements" means site improvements and facilities that are:

(i) planned and designed to provide service for development resulting from a development activity;

(ii) necessary for the use and convenience of the occupants or users of development resulting from a development activity; and

(iii) not identified or reimbursed as a system improvement.

(b) "Project improvements" does not mean system improvements.

(15) "Proportionate share" means the cost of public facility improvements that are roughly proportionate and reasonably related to the service demands and needs of any development activity.

(16) "Public facilities" means only the following impact fee facilities that have a life expectancy of 10 or more years and are owned or operated by or on behalf of a local political subdivision or private entity:

(a) water rights and water supply, treatment, storage, and distribution facilities;

(b) wastewater collection and treatment facilities;

(c) storm water, drainage, and flood control facilities;

(d) municipal power facilities;

(e) roadway facilities;

(f) parks, recreation facilities, open space, and trails;

(g) public safety facilities; or

(h) environmental mitigation as provided in Section 11-36a-205.

(17) (a) "Public safety facility" means:

(i) a building constructed or leased to house police, fire, or other public safety entities; or

(ii) a fire suppression vehicle costing in excess of $500,000.

(b) "Public safety facility" does not mean a jail, prison, or other place of involuntary incarceration.

(18) (a) "Roadway facilities" means a street or road that has been designated on an officially adopted subdivision plat, roadway plan, or general plan of a political subdivision, together with all necessary appurtenances.

(b) "Roadway facilities" includes associated improvements to a federal or state roadway only when the associated improvements:

(i) are necessitated by the new development; and

(ii) are not funded by the state or federal government.

(c) "Roadway facilities" does not mean federal or state roadways.

(19) (a) "Service area" means a geographic area designated by an entity that imposes an impact fee on the basis of sound planning or engineering principles in which a public facility, or a defined set of public facilities, provides service within the area.

(b) "Service area" may include the entire local political subdivision or an entire area served by a private entity.

(20) "Specified public agency" means:

(a) the state;

(b) a school district; or

(c) a charter school.

(21) (a) "System improvements" means:

(i) existing public facilities that are:

(A) identified in the impact fee analysis under Section 11-36a-304; and

(B) designed to provide services to service areas within the community at large; and

(ii) future public facilities identified in the impact fee analysis under Section 11-36a-304 that are intended to provide services to service areas within the community at large.

(b) "System improvements" does not mean project improvements.

Amended by Chapter 363, 2014 General Session

11-36a-201. Impact fees.

(1) A local political subdivision or private entity shall ensure that any imposed impact fees comply with the requirements of this chapter.

(2) A local political subdivision and private entity may establish impact fees only for those public facilities defined in Section 11-36a-102.
(3) Nothing in this chapter may be construed to repeal or otherwise eliminate an impact fee in effect on the effective date of this chapter that is pledged as a source of revenues to pay bonded indebtedness that was incurred before the effective date of this chapter.

Enacted by Chapter 47, 2011 General Session

11-36a-202. Prohibitions on impact fees.

(1) A local political subdivision or private entity may not:
(a) impose an impact fee to:
(i) cure deficiencies in a public facility serving existing development;
(ii) raise the established level of service of a public facility serving existing development;
(iii) recoup more than the local political subdivision's or private entity's costs actually incurred for excess capacity in an existing system improvement; or
(iv) include an expense for overhead, unless the expense is calculated pursuant to a methodology that is consistent with:
(A) generally accepted cost accounting practices; and
(B) the methodological standards set forth by the federal Office of Management and Budget for federal grant reimbursement;
(b) delay the construction of a school or charter school because of a dispute with the school or charter school over impact fees; or
(c) impose or charge any other fees as a condition of development approval unless those fees are a reasonable charge for the service provided.
(2) (a) Notwithstanding any other provision of this chapter, a political subdivision or private entity may not impose an impact fee:
(i) on residential components of development to pay for a public safety facility that is a fire suppression vehicle;
(ii) on a school district or charter school for a park, recreation facility, open space, or trail;
(iii) on a school district or charter school unless:
(A) the development resulting from the school district's or charter school's development activity directly results in a need for additional system improvements for which the impact fee is imposed; and
(B) the impact fee is calculated to cover only the school district's or charter school's proportionate share of the cost of those additional system improvements; or
(iv) to the extent that the impact fee includes a component for a law enforcement facility, on development activity for:
(A) the Utah National Guard;
(B) the Utah Highway Patrol; or
(C) a state institution of higher education that has its own police force.
(b) (i) Notwithstanding any other provision of this chapter, a political subdivision or private entity may not impose an impact fee on development activity that consists of the construction of a school, whether by a school district or a charter school, if:
(A) the school is intended to replace another school, whether on the same or a different parcel;
(B) the new school creates no greater demand or need for public facilities than the school or school facilities, including any portable or modular classrooms that are on the site of the replaced school at the time that the new school is proposed; and
(C) the new school and the school being replaced are both within the boundary of the local political subdivision or the jurisdiction of the private entity.
(ii) If the imposition of an impact fee on a new school is not prohibited under Subsection (2)(b)(i) because the new school creates a greater demand or need for public facilities than the school being replaced, the impact fee shall be based only on the demand or need that the new school creates for public facilities that exceeds the demand or need that the school being replaced creates for those public facilities.
(c) Notwithstanding any other provision of this chapter, a political subdivision or private entity may impose an impact fee for a road facility on the state only if and to the extent that:
(i) the state's development causes an impact on the road facility; and
(ii) the portion of the road facility related to an impact fee is not funded by the state or by the federal government.
(3) Notwithstanding any other provision of this chapter, a local political subdivision may impose and collect impact fees on behalf of a school district if authorized by Section 53A-20-100.5.

Enacted by Chapter 47, 2011 General Session

11-36a-203. Private entity assessment of impact fees -- Charges for water rights, physical infrastructure -- Notice -- Audit.

(1) A private entity:
(a) shall comply with the requirements of this chapter before imposing an impact fee; and
(b) except as otherwise specified in this chapter, is subject to the same requirements of this chapter as a local political subdivision.
(2) A private entity may only impose a charge for water rights or physical infrastructure necessary to provide water or sewer facilities by imposing an impact fee.
(3) Where notice and hearing requirements are specified, a private entity shall comply with the notice and hearing requirements for local districts.
(4) A private entity that assesses an impact fee under this chapter is subject to the audit requirements of Title 51, Chapter 2a, Accounting Reports from Political Subdivisions, Interlocal Organizations, and Other Local Entities Act.

Enacted by Chapter 47, 2011 General Session

11-36a-204. Other names for impact fees.

(1) A fee that meets the definition of impact fee under Section 11-36a-102 is an impact fee subject to this chapter, regardless of what term the local political subdivision or private entity uses to refer to the fee.
(2) A local political subdivision or private entity may not avoid application of this chapter to a fee that meets the definition of an impact fee under Section 11-36a-102 by referring to the fee by another name.

Enacted by Chapter 47, 2011 General Session

11-36a-205. Environmental mitigation impact fees.

Notwithstanding the requirements and prohibitions of this chapter, a local political subdivision may impose and assess an impact fee for environmental mitigation when:
(1) the local political subdivision has formally agreed to fund a Habitat Conservation Plan to resolve conflicts with the Endangered Species Act of 1973, 16 U.S.C. Sec. 1531, et seq. or other state or federal environmental law or regulation;
(2) the impact fee bears a reasonable relationship to the environmental mitigation required by the Habitat Conservation Plan; and
(3) the legislative body of the local political subdivision adopts an ordinance or resolution:
(a) declaring that an impact fee is required to finance the Habitat Conservation Plan;
(b) establishing periodic sunset dates for the impact fee; and
(c) requiring the legislative body to:
(i) review the impact fee on those sunset dates;
(ii) determine whether or not the impact fee is still required to finance the Habitat Conservation Plan; and
(iii) affirmatively reauthorize the impact fee if the legislative body finds that the impact fee must remain in effect.

Enacted by Chapter 47, 2011 General Session

11-36a-301. Impact fee facilities plan.

(1) Before imposing an impact fee, each local political subdivision or private entity shall, except as provided in Subsection (3), prepare an impact fee facilities plan to determine the public facilities required to serve development resulting from new development activity.
(2) A municipality or county need not prepare a separate impact fee facilities plan if the general plan required by Section 10-9a-401 or 17-27a-401, respectively, contains the elements required by Section 11-36a-302.
(3) A local political subdivision or a private entity with a population, or serving a population, of less than 5,000 as of the last federal census that charges impact fees of less than $250,000 annually need not comply with the impact fee facilities plan requirements of this part, but shall ensure that:
(a) the impact fees that the local political subdivision or private entity imposes are based upon a reasonable plan that otherwise complies with the common law and this chapter; and
(b) each applicable notice required by this chapter is given.

Amended by Chapter 200, 2013 General Session

11-36a-302. Impact fee facilities plan requirements -- Limitations -- School district or charter school.

(1) (a) An impact fee facilities plan shall:
(i) identify the existing level of service;
(ii) subject to Subsection (1)(c), establish a proposed level of service;
(iii) identify any excess capacity to accommodate future growth at the proposed level of service;
and placed upon existing public facilities by new development activity at the proposed level of service; and
(v) identify the means by which the political subdivision or private entity will meet those growth demands.
(b) A proposed level of service may diminish or equal the existing level of service.
(c) A proposed level of service may:

(i) exceed the existing level of service if, independent of the use of impact fees, the political subdivision or private entity provides, implements, and maintains the means to increase the existing level of service for existing demand within six years of the date on which new growth is charged for the proposed level of service; or

(ii) establish a new public facility if, independent of the use of impact fees, the political subdivision or private entity provides, implements, and maintains the means to increase the existing level of service for existing demand within six years of the date on which new growth is charged for the proposed level of service.

(2) In preparing an impact fee facilities plan, each local political subdivision shall generally consider all revenue sources to finance the impacts on system improvements, including:

(a) grants;

(b) bonds;

(c) interfund loans;

(d) impact fees; and

(e) anticipated or accepted dedications of system improvements.

(3) A local political subdivision or private entity may only impose impact fees on development activities when the local political subdivision's or private entity's plan for financing system improvements establishes that impact fees are necessary to maintain a proposed level of service that complies with Subsection (1)(b) or (c).

(4) (a) Subject to Subsection (4)(c), the impact fee facilities plan shall include a public facility for which an impact fee may be charged or required for a school district or charter school if the local political subdivision is aware of the planned location of the school district facility or charter school:

(i) through the planning process; or

(ii) after receiving a written request from a school district or charter school that the public facility be included in the impact fee facilities plan.

(b) If necessary, a local political subdivision or private entity shall amend the impact fee facilities plan to reflect a public facility described in Subsection (4)(a).

(c) (i) In accordance with Subsections 10-9a-305(3) and 17-27a-305(3), a local political subdivision may not require a school district or charter school to participate in the cost of any roadway or sidewalk.

(ii) Notwithstanding Subsection (4)(c)(i), if a school district or charter school agrees to build a roadway or sidewalk, the roadway or sidewalk shall be included in the impact fee facilities plan if the local jurisdiction has an impact fee facilities plan for roads and sidewalks.

Amended by Chapter 200, 2013 General Session

T

11-36a-303. Impact fee analysis.

(1) Subject to the notice requirements of Section 11-36a-504, each local political subdivision or private entity intending to impose an impact fee shall prepare a written analysis of each impact fee.

(2) Each local political subdivision or private entity that prepares an impact fee analysis under Subsection (1) shall also prepare a summary of the impact fee analysis designed to be understood by a lay person.

Enacted by Chapter 47, 2011 General Session

11-36a-304. Impact fee analysis requirements.

(1) An impact fee analysis shall:

(a) identify the anticipated impact on or consumption of any existing capacity of a public facility by the anticipated development activity;

(b) identify the anticipated impact on system improvements required by the anticipated development activity to maintain the established level of service for each public facility;

(c) subject to Subsection (2), demonstrate how the anticipated impacts described in Subsections (1)(a) and (b) are reasonably related to the anticipated development activity;

(d) estimate the proportionate share of:

(i) the costs for existing capacity that will be recouped; and

(ii) the costs of impacts on system improvements that are reasonably related to the new development activity; and

(e) based on the requirements of this chapter, identify how the impact fee was calculated.

(2) In analyzing whether or not the proportionate share of the costs of public facilities are reasonably related to the new development activity, the local political subdivision or private entity, as the case may be, shall identify, if applicable:

(a) the cost of each existing public facility that has excess capacity to serve the anticipated development resulting from the new development activity;

(b) the cost of system improvements for each public facility;

(c) other than impact fees, the manner of financing for each public facility, such as user charges, special assessments, bonded indebtedness, general taxes, or federal grants;

(d) the relative extent to which development activity will contribute to financing the excess capacity of and system improvements for each existing public facility, by such means as user charges, special assessments, or payment from the proceeds of general taxes;

(e) the relative extent to which development activity will contribute to the cost of existing public facilities and system improvements in the future;
(f) the extent to which the development activity is entitled to a credit against impact fees because the development activity will dedicate system improvements or public facilities that will offset the demand for system improvements, inside or outside the proposed development;
(g) extraordinary costs, if any, in servicing the newly developed properties; and
(h) the time-price differential inherent in fair comparisons of amounts paid at different times.

Enacted by Chapter 47, 2011 General Session

11-36a-305. Calculating impact fees.

(1) In calculating an impact fee, a local political subdivision or private entity may include:
(a) the construction contract price;
(b) the cost of acquiring land, improvements, materials, and fixtures;
(c) the cost for planning, surveying, and engineering fees for services provided for and directly related to the construction of the system improvements; and
(d) for a political subdivision, debt service charges, if the political subdivision might use impact fees as a revenue stream to pay the principal and interest on bonds, notes, or other obligations issued to finance the costs of the system improvements.
(2) In calculating an impact fee, each local political subdivision or private entity shall base amounts calculated under Subsection (1) on realistic estimates, and the assumptions underlying those estimates shall be disclosed in the impact fee analysis.

Enacted by Chapter 47, 2011 General Session

11-36a-306. Certification of impact fee analysis.

(1) An impact fee facilities plan shall include a written certification from the person or entity that prepares the impact fee facilities plan that states the following:

"I certify that the attached impact fee facilities plan:
1. includes only the costs of public facilities that are:
   a. allowed under the Impact Fees Act; and
   b. actually incurred; or
   c. projected to be incurred or encumbered within six years after the day on which each impact fee is paid;
2. does not include:
   a. costs of operation and maintenance of public facilities;
   b. costs for qualifying public facilities that will raise the level of service for the facilities, through impact fees, above the level of service that is supported by existing residents; or
   c. an expense for overhead, unless the expense is calculated pursuant to a methodology that is consistent with generally accepted cost accounting practices and the methodological standards set forth by the federal Office of Management and Budget for federal grant reimbursement; and
3. complies in each and every relevant respect with the Impact Fees Act."

(2) An impact fee analysis shall include a written certification from the person or entity that prepares the impact fee analysis which states as follows:

"I certify that the attached impact fee analysis:
1. includes only the costs of public facilities that are:
   a. allowed under the Impact Fees Act; and
   b. actually incurred; or
   c. projected to be incurred or encumbered within six years after the day on which each impact fee is paid;
2. does not include:
   a. costs of operation and maintenance of public facilities;
   b. costs for qualifying public facilities that will raise the level of service for the facilities, through impact fees, above the level of service that is supported by existing residents; or
   c. an expense for overhead, unless the expense is calculated pursuant to a methodology that is consistent with generally accepted cost accounting practices and the methodological standards set forth by the federal Office of Management and Budget for federal grant reimbursement;
3. offsets costs with grants or other alternate sources of payment; and
4. complies in each and every relevant respect with the Impact Fees Act."

Amended by Chapter 278, 2013 General Session

11-36a-401. Impact fee enactment.

(1) (a) A local political subdivision or private entity wishing to impose impact fees shall pass an impact fee enactment in

accordance with Section 11-36a-402.

(b) An impact fee imposed by an impact fee enactment may not exceed the highest fee justified by the impact fee analysis.

(2) An impact fee enactment may not take effect until 90 days after the day on which the impact fee enactment is approved.

Enacted by Chapter 47, 2011 General Session

11-36a-402. Required provisions of impact fee enactment.

(1) A local political subdivision or private entity shall ensure, in addition to the requirements described in Subsections (2) and (3), that an impact fee enactment contains:

(a) a provision establishing one or more service areas within which the local political subdivision or private entity calculates and imposes impact fees for various land use categories;

(b) (i) a schedule of impact fees for each type of development activity that specifies the amount of the impact fee to be imposed for each type of system improvement; or

(ii) the formula that the local political subdivision or private entity, as the case may be, will use to calculate each impact fee;

(c) a provision authorizing the local political subdivision or private entity, as the case may be, to adjust the standard impact fee at the time the fee is charged to:

(i) respond to:

(A) unusual circumstances in specific cases; or

(B) a request for a prompt and individualized impact fee review for the development activity of the state, a school district, or a charter school and an offset or credit for a public facility for which an impact fee has been or will be collected; and

(ii) ensure that the impact fees are imposed fairly; and

(d) a provision governing calculation of the amount of the impact fee to be imposed on a particular development that permits adjustment of the amount of the impact fee based upon studies and data submitted by the developer.

(2) A local political subdivision or private entity shall ensure that an impact fee enactment allows a developer, including a school district or a charter school, to receive a credit against or proportionate reimbursement of an impact fee if the developer:

(a) dedicates land for a system improvement;

(b) builds and dedicates some or all of a system improvement; or

(c) dedicates a public facility that the local political subdivision or private entity and the developer agree will reduce the need for a system improvement.

(3) A local political subdivision or private entity shall include a provision in an impact fee enactment that requires a credit against impact fees for any dedication of land for, improvement to, or new construction of, any system improvements provided by the developer if the facilities:

(a) are system improvements; or

(b) (i) are dedicated to the public; and

(ii) offset the need for an identified system improvement.

Enacted by Chapter 47, 2011 General Session

11-36a-403. Other provisions of impact fee enactment.

(1) A local political subdivision or private entity may include a provision in an impact fee enactment that:

(a) provides an impact fee exemption for:

(i) development activity attributable to:

(A) low income housing;

(B) the state;

(C) subject to Subsection (2), a school district; or

(D) subject to Subsection (2), a charter school; or

(ii) other development activity with a broad public purpose; and

(b) except for an exemption under Subsection (1)(a)(i)(A), establishes one or more sources of funds other than impact fees to pay for that development activity.

(2) An impact fee enactment that provides an impact fee exemption for development activity attributable to a school district or charter school shall allow either a school district or a charter school to qualify for the exemption on the same basis.

(3) An impact fee enactment that repeals or suspends the collection of impact fees is exempt from the notice requirements of Section 11-36a-504.

Enacted by Chapter 47, 2011 General Session

11-36a-501. Notice of intent to prepare an impact fee facilities plan.

(1) Before preparing or amending an impact fee facilities plan, a local political subdivision or private entity shall provide written notice of its intent to prepare or amend an impact fee facilities plan.

(2) A notice required under Subsection (1) shall:
(a) indicate that the local political subdivision or private entity intends to prepare or amend an impact fee facilities plan;
(b) describe or provide a map of the geographic area where the proposed impact fee facilities will be located; and
(c) subject to Subsection (3), be posted on the Utah Public Notice Website created under Section 63F-1-701.
(3) For a private entity required to post notice on the Utah Public Notice Website under Subsection (2)(c):
(a) the private entity shall give notice to the general purpose local government in which the private entity's private business office is located; and
(b) the general purpose local government described in Subsection (3)(a) shall post the notice on the Utah Public Notice Website.

Enacted by Chapter 47, 2011 General Session

11-36a-502. Notice to adopt or amend an impact fee facilities plan.

(1) If a local political subdivision chooses to prepare an independent impact fee facilities plan rather than include an impact fee facilities element in the general plan in accordance with Section 11-36a-301, the local political subdivision shall, before adopting or amending the impact fee facilities plan:
(a) give public notice, in accordance with Subsection (2), of the plan or amendment at least 10 days before the day on which the public hearing described in Subsection (1)(d) is scheduled;
(b) make a copy of the plan or amendment, together with a summary designed to be understood by a lay person, available to the public;
(c) place a copy of the plan or amendment and summary in each public library within the local political subdivision; and
(d) hold a public hearing to hear public comment on the plan or amendment.
(2) With respect to the public notice required under Subsection (1)(a):
(a) each municipality shall comply with the notice and hearing requirements of, and, except as provided in Subsection 11-36a-701(3)(b)(ii), receive the protections of Sections 10-9a-205 and 10-9a-801 and Subsection 10-9a-502(2);
(b) each county shall comply with the notice and hearing requirements of, and, except as provided in Subsection 11-36a-701(3)(b)(ii), receive the protections of Sections 17-27a-205 and 17-27a-801 and Subsection 17-27a-502(2); and
(c) each local district, special service district, and private entity shall comply with the notice and hearing requirements of, and receive the protections of, Section 17B-1-111.
(3) Nothing contained in this section or Section 11-36a-503 may be construed to require involvement by a planning commission in the impact fee facilities planning process.

Enacted by Chapter 47, 2011 General Session

11-36a-503. Notice of preparation of an impact fee analysis.

(1) Before preparing or contracting to prepare an impact fee analysis, each local political subdivision or, subject to Subsection (2), private entity shall post a public notice on the Utah Public Notice Website created under Section 63F-1-701.
(2) For a private entity required to post notice on the Utah Public Notice Website under Subsection (1):
(a) the private entity shall give notice to the general purpose local government in which the private entity's primary business is located; and
(b) the general purpose local government described in Subsection (2)(a) shall post the notice on the Utah Public Notice Website.

Enacted by Chapter 47, 2011 General Session

11-36a-504. Notice of intent to adopt impact fee enactment -- Hearing -- Protections.

(1) Before adopting an impact fee enactment:
(a) a municipality legislative body shall:
(i) comply with the notice requirements of Section 10-9a-205 as if the impact fee enactment were a land use ordinance;
(ii) hold a hearing in accordance with Section 10-9a-502 as if the impact fee enactment were a land use ordinance; and
(iii) except as provided in Subsection 11-36a-701(3)(b)(ii), receive the protections of Section 10-9a-801 as if the impact fee were a land use ordinance;
(b) a county legislative body shall:
(i) comply with the notice requirements of Section 17-27a-205 as if the impact fee enactment were a land use ordinance;
(ii) hold a hearing in accordance with Section 17-27a-502 as if the impact fee enactment were a land use ordinance; and
(iii) except as provided in Subsection 11-36a-701(3)(b)(ii), receive the protections of Section 17-27a-801 as if the impact fee were a land use ordinance;

(c) a local district or special service district shall:
(i) comply with the notice and hearing requirements of Section 17B-1-111; and
(ii) receive the protections of Section 17B-1-111;
(d) a local political subdivision shall at least 10 days before the day on which a public hearing is scheduled in accordance with this section:
(i) make a copy of the impact fee enactment available to the public; and
(ii) post notice of the local political subdivision's intent to enact or modify the impact fee, specifying the type of impact fee being enacted or modified, on the Utah Public Notice Website created under Section 63F-1-701; and
(e) a local political subdivision shall submit a copy of the impact fee analysis and a copy of the summary of the impact fee analysis prepared in accordance with Section 11-36a-303 on its website or to each public library within the local political subdivision.
(2) Subsection (1)(a) or (b) may not be construed to require involvement by a planning commission in the impact fee enactment process.

Enacted by Chapter 47, 2011 General Session

11-36a-601. Accounting of impact fees.

A local political subdivision that collects an impact fee shall:
(1) establish a separate interest bearing ledger account for each type of public facility for which an impact fee is collected;
(2) deposit a receipt for an impact fee in the appropriate ledger account established under Subsection (1);
(3) retain the interest earned on each fund or ledger account in the fund or ledger account;
(4) at the end of each fiscal year, prepare a report on each fund or ledger account showing:
(a) the source and amount of all money collected, earned, and received by the fund or ledger account; and
(b) each expenditure from the fund or ledger account; and
(5) produce a report that:
(a) identifies impact fee funds by the year in which they were received, the project from which the funds were collected, the impact fee projects for which the funds were budgeted, and the projected schedule for expenditure;
(b) is in a format developed by the state auditor;
(c) is certified by the local political subdivision's chief financial officer; and
(d) is transmitted annually to the state auditor.

Enacted by Chapter 47, 2011 General Session

11-36a-602. Expenditure of impact fees.

(1) A local political subdivision may expend impact fees only for a system improvement:
(a) identified in the impact fee facilities plan; and
(b) for the specific public facility type for which the fee was collected.
(2) (a) Except as provided in Subsection (2)(b), a local political subdivision shall expend or encumber the impact fees for a permissible use within six years of their receipt.
(b) A local political subdivision may hold the fees for longer than six years if it identifies, in writing:
(i) an extraordinary and compelling reason why the fees should be held longer than six years; and
(ii) an absolute date by which the fees will be expended.

Enacted by Chapter 47, 2011 General Session

11-36a-603. Refunds.

A local political subdivision shall refund any impact fee paid by a developer, plus interest earned, when:
(1) the developer does not proceed with the development activity and has filed a written request for a refund;
(2) the fee has not been spent or encumbered; and
(3) no impact has resulted.

Enacted by Chapter 47, 2011 General Session

11-36a-701. Impact fee challenge.

(1) A person or an entity residing in or owning property within a service area, or an organization, association, or a corporation representing the interests of persons or entities owning property within a service area, has standing to file a declaratory judgment action challenging the validity of an impact fee.
(2) (a) A person or an entity required to pay an impact fee who believes the impact fee does not meet the requirements of law may file a written request for information with the local political subdivision who established the impact fee.
(b) Within two weeks after the receipt of the request for information under Subsection (2)(a), the local political subdivision shall provide the person or entity with the impact fee analysis, the impact fee facilities plan, and any other relevant information relating to the impact fee.

(3) (a) Subject to the time limitations described in Section 11-36a-702 and procedures set forth in Section 11-36a-703, a person or an entity that has paid an impact fee that was imposed by a local political subdivision may challenge:

(i) if the impact fee enactment was adopted on or after July 1, 2000:

(A) subject to Subsection (3)(b)(i) and except as provided in Subsection (3)(b)(ii), whether the local political subdivision complied with the notice requirements of this chapter with respect to the imposition of the impact fee; and

(B) whether the local political subdivision complied with other procedural requirements of this chapter for imposing the impact fee; and

(ii) except as limited by Subsection (3)(c), the impact fee.

(b) (i) The sole remedy for a challenge under Subsection (3)(a)(i)(A) is the equitable remedy of requiring the local political subdivision to correct the defective notice and repeat the process.

(ii) The protections given to a municipality under Section 10-9a-801 and to a county under Section 17-27a-801 do not apply in a challenge under Subsection (3)(a)(i)(A).

(c) The sole remedy for a challenge under Subsection (3)(a)(ii) is a refund of the difference between what the person or entity paid as an impact fee and the amount the impact fee should have been if it had been correctly calculated.

(4) (a) Subject to Subsection (4)(d), if an impact fee that is the subject of an advisory opinion under Section 13-43-205 is listed as a cause of action in litigation, and that cause of action is litigated on the same facts and circumstances and is resolved consistent with the advisory opinion:

(i) the substantially prevailing party on that cause of action:

(A) may collect reasonable attorney fees and court costs pertaining to the development of that cause of action from the date of the delivery of the advisory opinion to the date of the court's resolution; and

(B) shall be refunded an impact fee held to be in violation of this chapter, based on the difference between the impact fee paid and what the impact fee should have been if the government entity had correctly calculated the impact fee; and

(ii) in accordance with Section 13-43-206, a government entity shall refund an impact fee held to be in violation of this chapter to the person who was in record title of the property on the day on which the impact fee for the property was paid if:

(A) the impact fee was paid on or after the day on which the advisory opinion on the impact fee was issued but before the day on which the final court ruling on the impact fee is issued; and

(B) the person described in Subsection (3)(a)(ii) requests the impact fee refund from the government entity within 30 days after the day on which the court issued the final ruling on the impact fee.

(b) A government entity subject to Subsection (3)(a)(ii) shall refund the impact fee based on the difference between the impact fee paid and what the impact fee should have been if the government entity had correctly calculated the impact fee.

(c) Subsection (4) may not be construed to create a new cause of action under land use law.

(d) Subsection (3)(a) does not apply unless the resolution described in Subsection (3)(a) is final.

Enacted by Chapter 47, 2011 General Session

11-36a-702. Time limitations.

(1) A person or an entity that initiates a challenge under Subsection 11-36a-701(3)(a) may not initiate that challenge unless it is initiated within:

(a) for a challenge under Subsection 11-36a-701(3)(a)(i)(A), 30 days after the day on which the person or entity pays the impact fee;

(b) for a challenge under Subsection 11-36a-701(3)(a)(i)(B), 180 days after the day on which the person or entity pays the impact fee; or

(c) for a challenge under Subsection 11-36a-701(3)(a)(ii), one year after the day on which the person or entity pays the impact fee.

(2) The deadline to file an action in district court is tolled from the date that a challenge is filed using an administrative appeals procedure described in Section 11-36a-703 until 30 days after the day on which a final decision is rendered in the administrative appeals procedure.

Enacted by Chapter 47, 2011 General Session

11-36a-703. Procedures for challenging an impact fee.

(1) (a) A local political subdivision may establish, by ordinance or resolution, or a private entity may establish by prior written policy, an administrative appeals procedure to consider and decide a challenge to an impact fee.

(b) If the local political subdivision or private entity establishes an administrative appeals procedure, the local political subdivision shall ensure that the procedure includes a requirement that the local political subdivision make its decision no later than 30 days after the day on which the challenge to the impact fee is filed.

(2) A challenge under Subsection 11-36a-701(3)(a) is initiated by filing:

(a) if the local political subdivision or private entity has established an administrative appeals procedure under Subsection (1), the necessary document, under the administrative appeals procedure, for initiating the administrative appeal;

(b) a request for arbitration as provided in Section 11-36a-705; or
(c) an action in district court.
(3) The sole remedy for a successful challenge under Subsection 11-36a-701(1), which determines that an impact fee process was invalid, or an impact fee is in excess of the fee allowed under this act, is a declaration that, until the local political subdivision or private entity enacts a new impact fee study, from the date of the decision forward, the entity may charge an impact fee only as the court has determined would have been appropriate if it had been properly enacted.
(4) Subsections (2), (3), 11-36a-701(3), and 11-36a-702(1) may not be construed as requiring a person or an entity to exhaust administrative remedies with the local political subdivision before filing an action in district court under Subsections (2), (3), 11-36a-701(3), and 11-36a-702(1).
(5) The judge may award reasonable attorney fees and costs to the prevailing party in an action brought under this section.
(6) This chapter may not be construed as restricting or limiting any rights to challenge impact fees that were paid before the effective date of this chapter.

Amended by Chapter 200, 2013 General Session

11-36a-704. Mediation.
(1) In addition to the methods of challenging an impact fee under Section 11-36a-701, a specified public agency may require a local political subdivision or private entity to participate in mediation of any applicable impact fee.
(2) To require mediation, the specified public agency shall submit a written request for mediation to the local political subdivision or private entity.
(3) The specified public agency may submit a request for mediation under this section at any time, but no later than 30 days after the day on which an impact fee is paid.
(4) Upon the submission of a request for mediation under this section, the local political subdivision or private entity shall:
(a) cooperate with the specified public agency to select a mediator; and
(b) participate in the mediation process.

Enacted by Chapter 47, 2011 General Session

11-36a-705. Arbitration.
(1) A person or entity intending to challenge an impact fee under Section 11-36a-703 shall file a written request for arbitration with the local political subdivision within the time limitation described in Section 11-36a-702 for the applicable type of challenge.
(2) If a person or an entity files a written request for arbitration under Subsection (1), an arbitrator or arbitration panel shall be selected as follows:
(a) the local political subdivision and the person or entity filing the request may agree on a single arbitrator within 10 days after the day on which the request for arbitration is filed; or
(b) if a single arbitrator is not agreed to in accordance with Subsection (2)(a), an arbitration panel shall be created with the following members:
(i) each party shall select an arbitrator within 20 days after the date the request is filed; and
(ii) the arbitrators selected under Subsection (2)(b)(i) shall select a third arbitrator.
(3) The arbitration panel shall hold a hearing on the challenge no later than 30 days after the day on which:
(a) the single arbitrator is agreed on under Subsection (2)(a); or
(b) the two arbitrators are selected under Subsection (2)(b)(i).
(4) The arbitrator or arbitration panel shall issue a decision in writing no later than 10 days after the day on which the hearing described in Subsection (3) is completed.
(5) Except as provided in this section, each arbitration shall be governed by Title 78B, Chapter 11, Utah Uniform Arbitration Act.
(6) The parties may agree to:
(a) binding arbitration;
(b) formal, nonbinding arbitration; or
(c) informal, nonbinding arbitration.
(7) If the parties agree in writing to binding arbitration:
(a) the arbitration shall be binding;
(b) the decision of the arbitration panel shall be final;
(c) neither party may appeal the decision of the arbitration panel; and
(d) notwithstanding Subsection (10), the person or entity challenging the impact fee may not also challenge the impact fee under Subsection 11-36a-701(1) or Subsection 11-36a-703(2)(a) or (2)(c).
(8) (a) Except as provided in Subsection (8)(b), if the parties agree to formal, nonbinding arbitration, the arbitration shall be governed by the provisions of Title 63G, Chapter 4, Administrative Procedures Act.
(b) For purposes of applying Title 63G, Chapter 4, Administrative Procedures Act, to a formal, nonbinding arbitration under this section, notwithstanding Section 63G-4-502, "agency" means a local political subdivision.
(9) (a) An appeal from a decision in an informal, nonbinding arbitration may be filed with the district court in which the local

political subdivision is located.

(b) An appeal under Subsection (9)(a) shall be filed within 30 days after the day on which the arbitration panel issues a decision under Subsection (4).

(c) The district court shall consider de novo each appeal filed under this Subsection (9).

(d) Notwithstanding Subsection (10), a person or entity that files an appeal under this Subsection (9) may not also challenge the impact fee under Subsection 11-36a-701(1) or Subsection 11-36a-703(2)(a) or (2)(c).

(10) (a) Except as provided in Subsections (7)(d) and (9)(d), this section may not be construed to prohibit a person or entity from challenging an impact fee as provided in Subsection 11-36a-701(1) or Subsection 11-36a-703(2)(a) or (2)(c).

(b) The filing of a written request for arbitration within the required time in accordance with Subsection (1) tolls all time limitations under Section 11-36a-702 until the day on which the arbitration panel issues a decision.

(11) The person or entity filing a request for arbitration and the local political subdivision shall equally share all costs of an arbitration proceeding under this section.

Enacted by Chapter 47, 2011 General Session

APPENDIX B

WATER SYSTEM MAPS

N

400 0 400
SCALE IN FEET

LEGEND

- 12"ø WATER LINE
- 10"ø WATER LINE
- 8"ø WATER LINE
- 6"ø WATER LINE
- 4"ø WATER LINE
- WATER METER
- FIRE HYDRANT
- WATER VALVE

FIRE HYDRANT COVERAGE AREA

PVE USE ONLY

PLOT SCALE: 400

PROJECT NAME: TOQ WATER STUDY

PROJECT NO: 1121

KARL B. RASMUSSEN NO. 191090

ProValue Engineering, Inc.
1381 South 325 West, Hurricane, UT 84737
TEL: (435) 668-8307 FAX: (866) 435-3070

CITY OF TOQUERVILLE WATER STUDY
ANDERSON JUNCTION WATER MAP

PRO VALUE ENGINEERING

DESIGNED	CHECKED	DRAWN
KBR	KBR	DL

SCALE: 400 DATE: 3/1/2012

SHEET NO. 4 DRAWING NO. WP-4

5/14/2015 3:54 PM D:\PROPROX\LD PVE\11-012 TOQUERVILLE WATER PROJECT 2013\DWG\TOQ WATER MASTER MAP.DWG

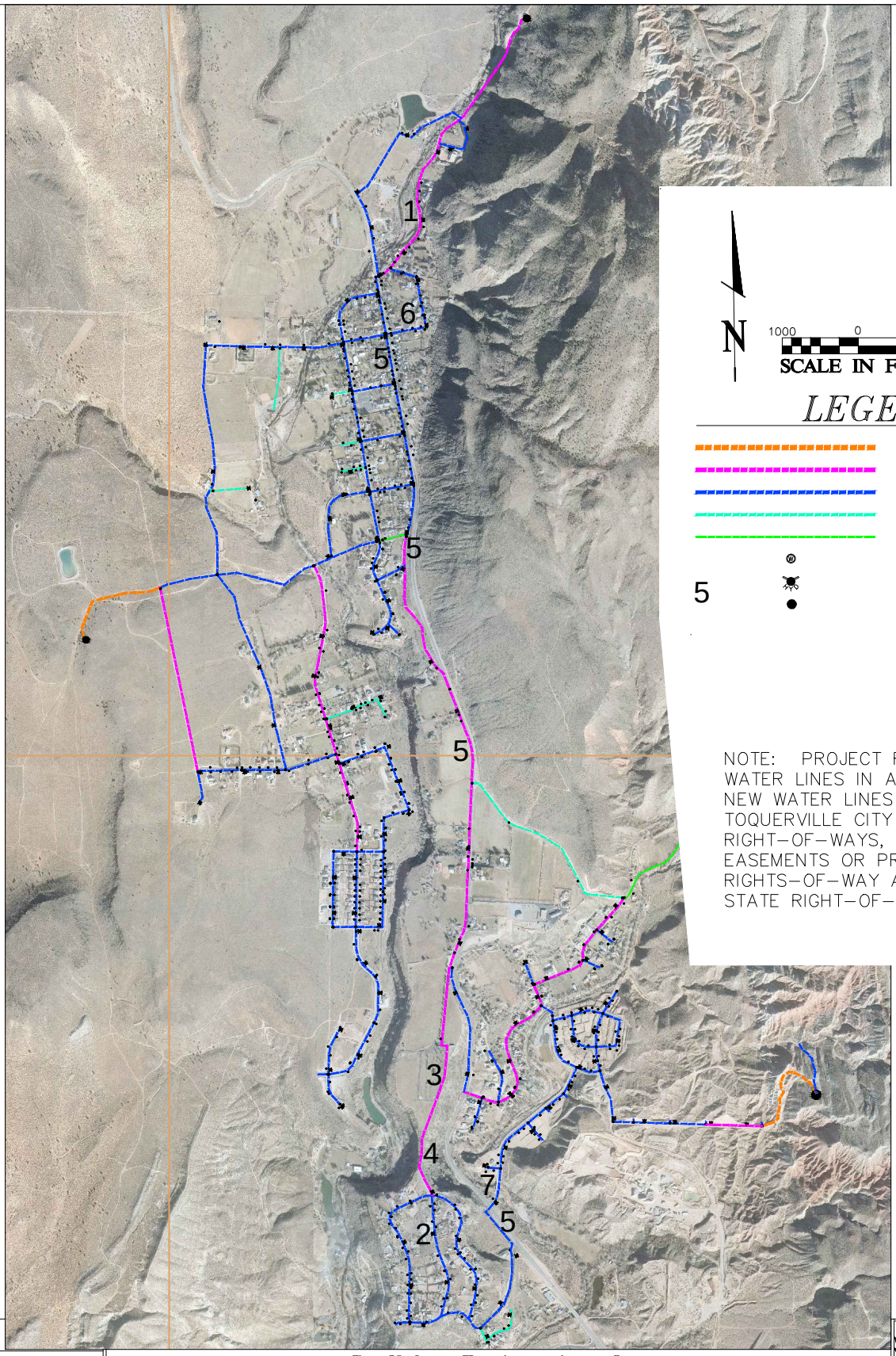

N

1000 0 1000

SCALE IN FEET

LEGEND

- 12"ø WATER LINE
- 10"ø WATER LINE
- 8"ø WATER LINE
- 6"ø WATER LINE
- 4"ø WATER LINE
- WATER METER
- FIRE HYDRANT
- WATER VALVE

5

NOTE: PROJECT REPLACES WATER LINES IN ALL LOCATIONS. NEW WATER LINES WILL BE WITHIN TOQUERVILLE CITY STREET RIGHT-OF-WAYS, OBTAINED EASEMENTS OR PRESCRIPTIVE RIGHTS-OF-WAY AND WITHIN STATE RIGHT-OF-WAYS.

PVE USE ONLY

PLOT SCALE: 1"=2000'

FILE NAME: MASTER MAP

PROJECT NO: 11-012

DRAWN BY: KBR

ProValue Engineering, Inc.
20 South 850 West, Suite 1, Hurricane, UT 84737
TEL: (435) 668-8307 FAX: (866) 435-3070

TOQUERVILLE CITY WATER IMPROVEMENTS PROJECT 2013
ASBUILT WATER SYSTEM MAP

SCALE: 1"=2000'

DATE: 5-14-2015

SHEET NO. 1

APPENDIX C

ROADWAY SYSTEM MAP

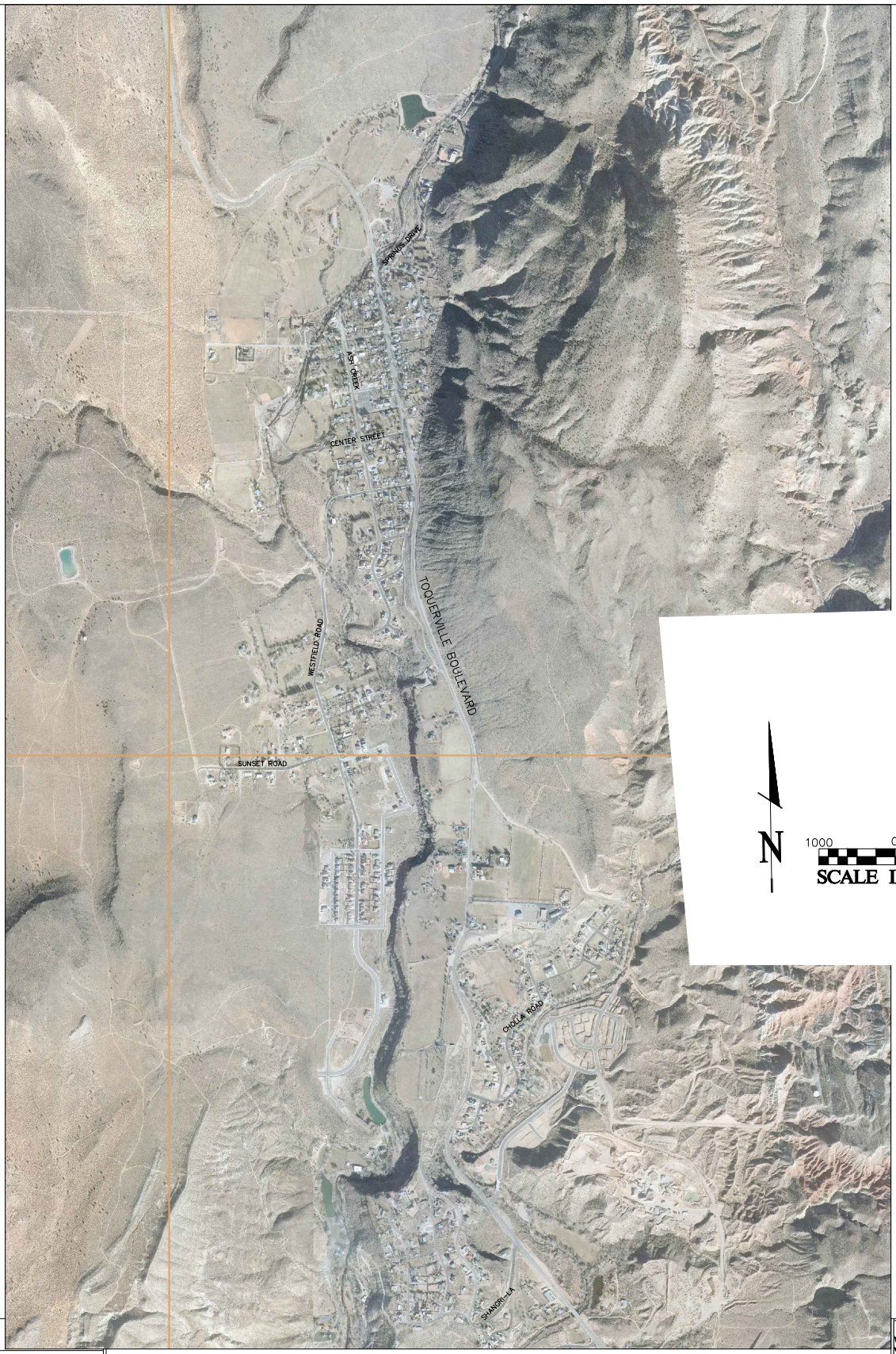

PVE USE ONLY

PLOT SCALE: 1"=2000'

FILE NAME: MASTER MAP

PROJECT NO: 11-012

DRAWN BY: KBR

ProValue Engineering, Inc.
20 South 850 West, Suite 1, Hurricane, UT 84737
TEL: (435) 668-8307 FAX: (866) 435-3070

TOQUERVILLE CITY MAP OF STREETS

SCALE: 1"=2000'

DATE: 5-14-2015

SHEET NO. 1

APPENDIX D

PARK & TRAILS MAPS

Toquerville City Park

CONCEPT MASTER PLAN #2

SCALE: 1"=40'-0"

0 20' 40' 80'

Prepared By:

JACKSON LAND DESIGN, PC

LANDSCAPE ARCHITECTS

2556 CLEARWATER
POCATELLO, IDAHO 83201
PH. (208) 589-4498, FAX (208) 237-2260
JLandDesign@cableone.net

December 3, 2015

ASH CREEK (TYP.)
LOOPED WALKING TRAIL (1/3 MILE +/-))
2 NEW PICKLE BALL COURTS
PERIMETER TREE GROUPING (TYP.)
6 EXERCISE STATIONS (TYP.)
PICNIC TABLE PADS (TYP.)
LAWN
NEW PERIMETER WALKING TRAIL
BENCHES (TYP.)
EXISTING BALLFIELD
BENCHES (TYP.)
2 RACQUETBALL COURTS (OUTDOOR)
LAWN
NEW WALL
RECONFIGURED PARKING
PLAYGROUND
NEW COMMUNITY CENTER W/ GYMNASIUM, ETC.
PROPERTY LINE (TYP.)
BRIDGE
NEW PAVILION W/ BARBECUES
STAIRS
PAVILION
DECORATIVE LANDSCAPING (TYPICAL)
A.D.A. ACCESSIBLE ROUTE
NEW BLEACHERS W/SHADE COVER
NEW PATIO AND BLEACHER PAD WITH SHADE COVER (TYP.)
LAWN
ASH CREEK
PARKING - 36 STALLS
EXIST. CONCESSION
EXISTING ROCK STABILIZATION
PED. CROSSING
CENTER STREET
NEW FLAG COURT
CUSTOM STAGE HOUSE / PAVILION
EXISTING DIRT ROAD
PARKING
TURF
NEW DOG PARK
HORSESHOE PITS
NEW AMPHITHEATER WITH SEATING FOR 200
NEW PAVILION

Trail Ridge Park

CONCEPT MASTER PLAN

SCALE: 1"=30'-0"

0 20' 40' 80'

NORTH

Prepared By:

JACKSON LAND DESIGN, PC

LANDSCAPE ARCHITECTS

2556 CLEARWATER
POCATELLO, IDAHO 83201
PH. (208) 589-4498, FAX (208) 237-2260
JLandDesign@cableone.net

August 3, 2015

LANDSCAPE PARK SIGN FEATURE

NEW FULL-COURT BASKETBALL

EXISTING PARKING LOT

DECORATIVE ROCK MULCH BANDING (2 TYPES) ON SLOPE (TYP.)

25.00' PUBLIC TRAIL

ARCHES STREET

URBAN FISHING POND

BENCHES (TYP.)

ZIONS PARKWAY

NEW SOCCER FIELD (60 YDS. X 100 YDS.)

NEW PLAYGROUND

NEW RESTROOMS

NEW PAVILION

PICNIC TABLES & STREAM ACCESS (TYP.)

BLEACHER PAD

GRASS (TYP.)

GRASS (TYP.)

NEW PAVILION

REVISED TRAIL ALIGNMENT

ASH CREEK (TYP.)

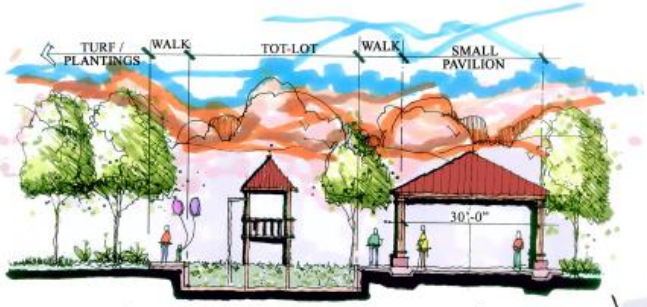

Section View at Playground

No to Scale

Playground

Arbor Structure

Restroom

Pavilion

Concept Images:

ALMOND HEIGHTS PARK

Toquerville, Utah

CONCEPT MASTER PLAN

Almond Heights Park - Plan View

Scale: 1"=20'-0"

0' 10' 20' 40'

Prepared By:

JACKSON LAND DESIGN, PC
Landscape Architects
2556 Clearwater
Pocatello, Idaho 83201
ph. (208) 589-4498
fax (208) 237-2260
JLandDesign@cableone.net

March 2016

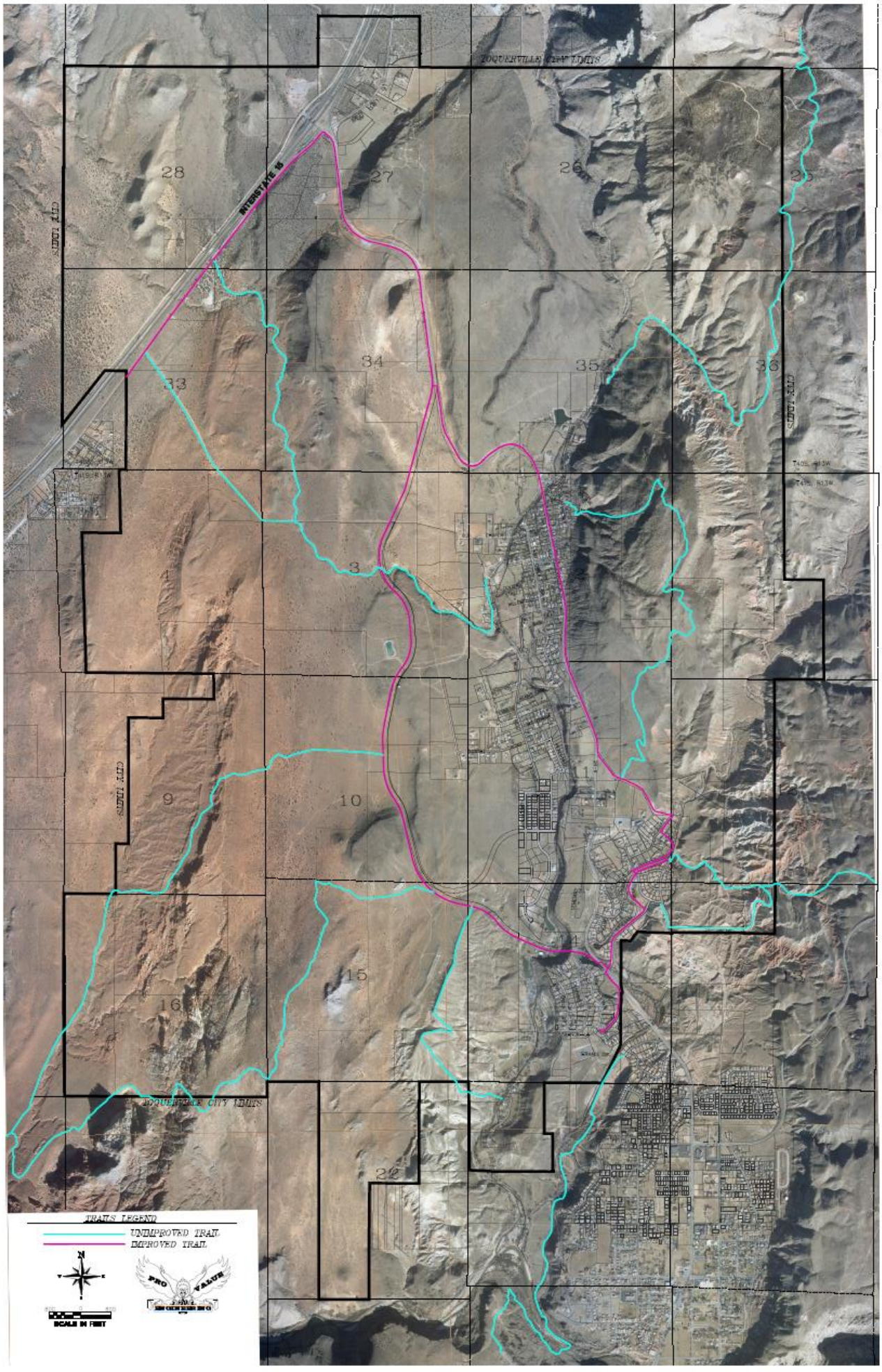
TOQUERVILLE CITY LIMITS
INTERSTATE 15
CITY LIMITS
28
27
26
25
34
35
36
33
3
4
1
9
10
11
12
14
15
16
13
22
TRAILS LEGEND
UNIMPROVED TRAIL
IMPROVED TRAIL
N
SCALE IN FEET
PRO VALUE

APPENDIX E

SPREADSHEET TABLES OF IMPACT FEE ANALYSIS

CITY OF TOQUERVILLE WATER SYSTEM

IMPACT FEE CALCULATION

USER COST BREAKDOWN OF IMPACT FEES

	COMPONENT	COST	ERC	COST PER ERC
#1	WATER SOURCE	$ -	711	$ -
#2	WATER STORAGE	$ 990,000.00	1338	$ 739.91
#3	WATER DISTRIBUTION	$ 1,517,000.00	1432	$ 1,059.36
	TOTAL FEES	**$ 2,507,000.00**		**$ 1,799.27**

	TOTAL IMPACT FEE	**$ 1,799.27**	PER ERC

FACTOR		
1.78	**3/4" Meter Impact Fee**	**$ 1,799.27**
1.78	**1" Meter Impact Fee**	**$ 3,198.70**
4.00	**1-1/2" Meter Impact Fee**	**$ 7,197.07**
7.11	**2" Meter Impact Fee**	**$ 12,794.79**
16.00	**3" Meter Impact Fee**	**$ 28,788.29**

WATER SOURCE ERC CALCS			
324000	GPD	IRR USE	
710.73	users	297.3913043	GPM
insert in cell d12		18.6%	% users using irrigation

WATER STORAGE ERC	
Based on Tank Capacity	
1,250,000	gal
(180,000)	gal fire
1,070,000	gal for users
1,337.50	users
insert in cell d13	

DISTRIBUTION ERC	
3.925	CFS
1761.54	GPM
1,432.03	users
insert in cell d15 & d18	

TOQUERVILLE CITY LIST OF CAPITAL IMPROVEMENTS

PROJECT	LOCATION	DESCRIPTION	SIZE OR LENGTH	$/SIZE OR $/LENGTH	Construction $	Engineering	Contingency	Total
CW-01	Hillside/Cotton Gin	Replace approximately 810 feet of culinary waterline with valves, fire hydrants, meters and appurtenances.	810	$ 103.00	$ 84,000.00	$ 9,000.00	$ 9,000.00	$ 102,000.00
CW-02	Springs Tank	Replace the 500,000 gallon concrete water tank on Springs Drive along with approximately 300 feet of water pipe, air valves, gate valves and appurtenances.	250,000	$ 1.10	$ 275,000.00	$ 28,000.00	$ 28,000.00	$ 331,000.00
CW-03	Ash Creek Drive	Replace approximately 3,700 feet of 8" culinary waterline with valves, fire hydrants, meters and appurtenances.	3,700	$ 103.00	$ 382,000.00	$ 39,000.00	$ 39,000.00	$ 460,000.00
CW-04	Berry Lane	Replace approximately 380 feet of culinary waterline with valves, fire hydrants, meters and appurtenances.	380	$ 103.00	$ 40,000.00	$ 4,000.00	$ 4,000.00	$ 48,000.00
CW-05	Cholla Creek Lane	Replace approximately 5,000 feet of culinary waterline with valves, fire hydrants, meters and appurtenances.	5,000	$ 104.00	$ 520,000.00	$ 52,000.00	$ 52,000.00	$ 624,000.00
CW-06	Hunter Lane	Replace approximately 2,720 feet of culinary waterline with valves, fire hydrants, meters and appurtenances.	2,720	$ 86.00	$ 234,000.00	$ 24,000.00	$ 24,000.00	$ 282,000.00
CW-07	Westfield Tank	Replace the 500,000 gallon concrete water tank on Springs Drive along with approximately 300 feet of water pipe, air valves, gate valves and appurtenances.	550,000	$ 1.00	$ 550,000.00	$ 55,000.00	$ 55,000.00	$ 660,000.00
ST-01	Hillside/Cotton Gin	Street Improvements needed for 1215 feet of Hillside and Cotton Gin Streets. Includes new curb & gutter, asphalt, and storm drain system.	1,215	$ 160.00	$ 194,400.00	$ 20,000.00	$ 20,000.00	$ 234,400.00
ST-02	Ash Creek Drive	Street Improvements needed for 3,700 feet of Ash Creek Drive.	3,700	$ 160.00	$ 592,000.00	$ 60,000.00	$ 60,000.00	$ 712,000.00
ST-03	Shadow Creek Lane	Street Improvements needed for 480 feet of Shadow Creek Lane	480	$ 110.00	$ 52,800.00	$ 6,000.00	$ 6,000.00	$ 64,800.00
ST-04	Hunter Lane	Street Improvements needed for 2,720 feet of Shadow Creek Lane	2,720	$ 160.00	$ 435,200.00	$ 44,000.00	$ 44,000.00	$ 523,200.00
ST-05	Toquerville Heights	Install new storm drain system to take care of Heights storm drainage need	2,222	$ 60.00	$ 133,320.00	$ 14,000.00	$ 14,000.00	$ 161,320.00
ST-06	Bypass Road	Bypass Road Improvements needed for 23,300 feet of the West Bypass Road	23,300	$ 309.00	$ 7,199,700.00	$ 720,000.00	$ 720,000.00	$ 8,639,700.00
ST-07	Springs Drive	Street Improvements needed for 2,305 feet of Springs Drive	2,305	$ 140.00	$ 322,700.00	$ 33,000.00	$ 33,000.00	$ 388,700.00
TR-01	Bypass Road Trail	Bypass trail Improvements needed for 23,300 feet of the trail along the Bypass Route.	23,300	$ 40.00	$ 932,000.00	$ 94,000.00	$ 94,000.00	$ 1,120,000.00
TR-02	Hunter - Hwy Trail	Asphalt trail Improvements needed for 6,700 feet of the trail along the Hunter and Highway 17.	6,700	$ 40.00	$ 268,000.00	$ 27,000.00	$ 27,000.00	$ 322,000.00
TR-03	Anderson Jct Trail	Asphalt trail Improvements needed for 14,300 feet of the trail along Highway 17 from Toquerville to Anderson Junction	14,300	$ 40.00	$ 572,000.00	$ 58,000.00	$ 58,000.00	$ 688,000.00
TR-04	Frontage Road Trail	Asphalt trail Improvements needed for 9,900 feet of the trail along the I-15 frontage road.	9,900	$ 40.00	$ 396,000.00	$ 40,000.00	$ 40,000.00	$ 476,000.00
PK-01	Toquerville City Park	Site improvements for 10.32 acres of Park to include infrastructure and amenities	10.32	$ 150,000.00	$ 1,548,000.00	$ 155,000.00	$ 155,000.00	$ 1,858,000.00
PK-02	Trail Ridge Park	Site improvements for 4.23 acres of Park to include infrastructure and amenities	4.23	$ 150,000.00	$ 634,500.00	$ 64,000.00	$ 64,000.00	$ 762,500.00
PK-03	Almond Heights Park	Site improvements for 2.07 acres of Park to include infrastructure and amenities	2.07	$ 150,000.00	$ 310,500.00	$ 32,000.00	$ 32,000.00	$ 374,500.00

CULINARY WATER TOTAL=	**$ 2,507,000.00**
STREETS TOTAL=	**$ 10,724,120.00**
TRAILS TOTAL =	**$ 2,606,000.00**
PARKS TOTAL =	**$ 2,995,000.00**

TOQUERVILLE CITY IMPACT FEES 2016

WATER IMPACT FEE		
Users: Water Source = 711, Water Storage = 1338,	**TOTAL PRICE**	**$ 2,507,000.00**
Water Distribution= 1432	**USERS**	**Based on Component**
	PRICE PER USER	**$ 1,799.27**

STREET IMPACT FEE		
TOTAL HERE WILL BE $ 10,724,120.00	**TOTAL PRICE**	**$ 2,948,390.00**
LESS UDOT PARTICIPATION ON BYPASS ROAD	**USERS**	**1,201**
OF $ (7,775,730.00) 1,201 Based of 2040 Pop. Projection	**PRICE PER USER**	**$ 2,454.95**

TRAILS IMPACT FEE		
1,201 Based of 2040 Pop. Projection	**TOTAL PRICE**	**$ 2,606,000.00**
	USERS	**1,201**
	PRICE PER USER	**$ 2,169.86**

PARKS IMPACT FEE		
PARK AREA= 4 ACRES PER 1000 RESIDENTS	**TOTAL PRICE**	**$ 2,995,000.00**
PARK AREA WILL SERVE 4,155 PEOPLE	**USERS**	**1,353**
PEOPLE PER USER IS 3.07, SEE TABLE II-C	**PRICE PER USER**	**$ 2,213.60**
AT 3.07 PEOPLE PER USER, THE NUMBER OF USERS IS 1353		

TOTAL PER USER	**8,637.67**

APPENDIX F

SUPPORTING DOCUMENTATION

TOQUERVILLE WATER PROJECTIONS

Year	POPULATION	USERS	Irrigation Users	GPM Water Right	GPM Irrigation Right	Total Right	AF/YEAR	GPM SOURCE	GPM IRR SOURCE	total source	GAL STORAGE	IRR STORAGE	FIRE STORAGE	total storage	GPM Distribution	Irr Distribution	Total Distrib.
2010	1370																
2011	1,426	489	92	102	19	120	194	272	45	317	195,600	45,669	180,000	421,269	568	90	658
2012	1,482	494	92	103	19	121	196	274	45	320	197,600	45,669	180,000	423,269	572	90	662
2013	1,538	513	92	107	19	125	202	285	45	330	205,067	45,669	180,000	430,735	586	90	676
2014	1,582	515	92	107	19	126	203	286	45	331	206,124	45,669	180,000	431,793	588	90	678
2015	1,635	520	92	108	19	127	205	289	45	334	208,000	45,669	180,000	433,669	591	90	681
2016	1,698	553	92	115	19	134	216	307	45	352	221,290	45,669	180,000	446,959	615	90	705
2017	1,762	574	92	120	19	138	223	319	45	364	229,550	45,669	180,000	455,219	630	90	720
2018	1,825	595	92	124	19	142	230	330	45	375	237,811	45,669	180,000	463,480	644	90	734
2019	1,889	615	92	128	19	147	237	342	45	387	246,072	45,669	180,000	471,740	658	90	748
2020	1,952	636	92	132	19	151	244	353	45	398	254,332	45,669	180,000	480,001	672	90	762
2021	2,028	661	92	138	19	156	252	367	45	412	264,208	45,669	180,000	489,877	689	90	779
2022	2,104	685	122	143	25	167	270	381	60	440	274,085	60,561	180,000	514,645	705	120	825
2023	2,179	710	122	148	25	173	278	394	60	454	283,961	60,561	180,000	524,522	721	120	841
2024	2,255	735	122	153	25	178	287	408	60	468	293,837	60,561	180,000	534,398	737	120	857
2025	2,331	777	122	162	25	187	301	432	60	491	310,800	60,561	180,000	551,361	764	120	884
2026	2,421	789	122	164	25	189	305	438	60	498	315,492	60,561	180,000	556,053	772	120	891
2027	2,512	818	122	170	25	195	315	455	60	514	327,270	60,561	180,000	567,831	790	120	910
2028	2,602	848	122	177	25	201	325	471	60	531	339,049	60,561	180,000	579,610	808	120	928
2029	2,693	877	122	183	25	207	335	487	60	547	350,827	60,561	180,000	591,388	826	120	946
2030	2,783	907	122	189	25	213	345	504	60	563	362,606	60,561	180,000	603,167	844	120	963
2031	2,867	934	122	195	25	219	354	519	60	579	373,550	60,561	180,000	614,111	860	120	979
2032	2,951	961	152	200	31	231	373	534	74	609	384,495	75,453	180,000	639,948	876	149	1,025
2033	3,035	989	152	206	31	237	382	549	74	624	395,440	75,453	180,000	650,893	892	149	1,041
2034	3,119	1,016	152	212	31	242	391	564	74	639	406,384	75,453	180,000	661,837	907	149	1,056
2035	3,203	1,077	152	224	31	255	412	598	74	673	430,800	75,453	180,000	686,253	942	149	1,091
2036	3,300	1,075	152	224	31	255	411	597	74	672	429,941	75,453	180,001	685,395	941	149	1,090
2037	3,397	1,106	152	230	31	261	422	615	74	689	442,554	75,453	180,002	698,009	958	149	1,107
2038	3,493	1,138	152	237	31	268	432	632	74	707	455,166	75,453	180,003	710,622	976	149	1,125
2039	3,590	1,169	152	244	31	274	443	650	74	724	467,779	75,453	180,004	723,235	993	149	1,142
2040	3,687	1,201	152	250	31	281	453	667	74	742	480,391	75,453	180,005	735,849	1,010	149	1,159
2041	3,707	1,207	152	252	31	282	456	671	74	745	482,997	75,453	180,006	738,456	1,014	149	1,162
2042	3,791	1,235	152	257	31	288	465	686	74	761	493,941	75,453	180,007	749,401	1,028	149	1,177
2043	3,875	1,262	152	263	31	294	474	701	74	776	504,886	75,453	180,008	760,347	1,043	149	1,192
2044	3,959	1,290	152	269	31	299	483	716	74	791	515,831	75,453	180,009	771,292	1,057	149	1,206
2045	4,043	1,317	152	274	31	305	492	732	74	806	526,775	75,453	180,010	782,238	1,071	149	1,220
2046	4,127	1,344	152	280	31	311	502	747	74	821	537,720	75,453	180,011	793,184	1,086	149	1,235
2047	4,211	1,372	152	286	31	316	511	762	74	837	548,664	75,453	180,012	804,129	1,100	149	1,249
2048	4,295	1,399	152	291	31	322	520	777	74	852	559,609	75,453	180,013	815,075	1,114	149	1,263
2049	4,379	1,426	152	297	31	328	529	792	74	867	570,554	75,453	180,014	826,021	1,128	149	1,277
2050	4,463	1,454	152	303	31	334	538	808	74	882	581,498	75,453	180,015	836,966	1,141	149	1,290
2050	4,547	1,481	152	309	31	339	548	823	74	897	592,443	75,453	180,015	847,911	1,155	149	1,304
2051	4,631	1,508	152	314	31	345	557	838	74	913	603,388	75,453	180,015	858,855	1,169	149	1,318
2052	4,715	1,536	152	320	31	351	566	853	74	928	614,332	75,453	180,015	869,800	1,182	149	1,331
2053	4,799	1,563	152	326	31	356	575	868	74	943	625,277	75,453	180,015	880,745	1,196	149	1,345
2054	4,883	1,591	152	331	31	362	584	884	74	958	636,221	75,453	180,015	891,689	1,209	149	1,358
2055	4,967	1,618	152	337	31	368	594	899	74	973	647,166	75,453	180,015	902,634	1,222	149	1,371
2056	5,051	1,645	152	343	31	373	603	914	74	989	658,111	75,453	180,015	913,579	1,235	149	1,384
2057	5,135	1,673	152	348	31	379	612	929	74	1,004	669,055	75,453	180,015	924,523	1,249	149	1,397
2058	5,219	1,700	152	354	31	385	621	944	74	1,019	680,000	75,453	180,015	935,468	1,262	149	1,411
2059	5,303	1,727	152	360	31	391	630	960	74	1,034	690,945	75,453	180,015	946,412	1,275	149	1,423
2060	6440	2146.6667	152	447	31	478	771	1,193	74	1,267	858,667	75,453	180,015	1,114,134	1,465	149	1,614

2012 Baseline City Population Projections

2010-2060

Geography	Census 2010	2020	Projections 2030	2040	2050	2060
Beaver County	6,629	7,766	9,225	10,522	11,837	13,502
Beaver city	3,112	3,646	4,331	4,940	5,557	6,339
Milford city	1,409	1,651	1,961	2,236	2,516	2,870
Minersville town	907	1,063	1,262	1,440	1,620	1,847
Balance of Beaver County	1,201	1,407	1,671	1,906	2,145	2,446
Box Elder County	49,975	54,571	59,437	64,704	70,501	77,030
Bear River City city	853	871	951	971	1,058	1,155
Brigham City city	17,899	19,100	21,397	22,970	25,028	27,346
Corinne city	685	764	892	1,035	1,058	1,232
Deweyville town	332	355	398	434	494	578
Elwood town	1,034	1,252	1,486	1,682	1,974	2,157
Fielding town	455	491	505	582	635	770
Garland city	2,400	2,783	3,066	3,452	3,525	3,852
Honeyville city	1,441	1,419	1,647	1,754	2,039	2,278
Howell town	245	273	297	324	353	385
Mantua town	687	709	773	841	987	1,001
Perry city	4,512	5,566	6,538	7,764	8,531	10,168
Plymouth town	414	478	553	635	561	557
Portage town	245	218	238	259	282	308
Snowville town	167	164	178	162	141	154
Tremonton city	7,647	8,731	9,510	10,353	11,985	13,480
Willard city	1,772	1,945	2,036	2,182	2,545	2,773
Balance of Box Elder County	9,187	9,452	8,971	9,305	9,308	8,835
Cache County	112,656	139,228	168,136	196,559	232,468	273,817
Amalga town	488	540	587	603	930	1,095
Clarkston town	666	696	841	983	1,162	1,369
Cornish town	288	332	362	384	465	548
Hyde Park city	3,833	4,930	6,214	7,552	7,673	8,454
Hyrum city	7,609	9,328	11,079	12,794	15,851	19,012
Lewiston city	1,766	1,777	2,186	2,555	3,487	3,833
Logan city	48,174	57,057	63,943	76,658	92,987	111,717
Mendon city	1,282	1,689	2,239	2,555	2,790	3,286
Millville city	1,829	2,196	2,593	2,951	3,834	4,673
Newton town	789	835	841	983	1,162	1,369
Nibley city	5,438	8,796	14,136	15,725	18,597	21,905
North Logan city	8,269	11,641	14,964	16,708	18,597	21,905
Paradise town	904	1,123	1,334	1,552	1,879	2,236
Providence city	7,075	9,050	11,770	13,759	16,273	19,167
Richmond city	2,470	2,785	3,026	3,342	4,184	5,203
River Heights city	1,734	2,088	2,152	2,258	2,557	3,012
Smithfield city	9,495	12,051	15,171	18,307	19,069	21,245
Trenton town	464	557	673	786	930	1,095
Wellsville city	3,432	4,160	5,036	5,831	7,098	8,444
Balance of Cache County	6,651	7,597	8,991	10,274	12,941	14,247
Carbon County	21,403	21,602	22,092	22,860	23,582	24,384
East Carbon city	1,301	1,313	1,343	1,390	1,433	1,482
Helper city	2,201	2,221	2,272	2,351	2,425	2,508
Price city	8,715	8,796	8,996	9,308	9,602	9,929
Scofield town	24	24	25	26	26	27
Sunnyside city	377	381	389	403	415	430
Wellington city	1,676	1,692	1,730	1,790	1,847	1,909
Balance of Carbon County	7,109	7,175	7,338	7,593	7,833	8,099

Uintah County	32,588	38,982	41,099	42,690	46,291	50,174
Ballard town	801	958	1,010	1,049	1,138	1,233
Naples city	1,755	2,099	2,213	2,299	2,493	2,702
Vernal city	9,089	10,872	11,463	11,907	12,911	13,994
Balance of Uintah County	20,943	25,052	26,413	27,435	29,749	32,245
Utah County	516,564	668,564	833,101	1,019,828	1,216,695	1,398,074
Alpine city	9,555	10,670	11,667	12,851	13,400	13,700
American Fork city	26,263	32,566	39,635	47,678	54,000	58,900
Cedar Fort town	368	961	2,757	4,503	6,900	9,000
Cedar Hills city	9,796	10,733	10,884	11,689	11,800	11,900
Draper city (pt.)	1,742	2,520	3,303	3,977	5,100	6,200
Eagle Mountain city	21,415	34,152	54,095	76,469	114,400	152,500
Elk Ridge city	2,436	3,898	4,696	5,888	7,100	8,500
Fairfield town	119	599	955	2,148	3,900	5,300
Genola town	1,370	3,789	4,370	6,499	8,600	10,800
Goshen town	921	1,146	1,220	1,419	1,700	1,800
Highland city	15,523	17,792	20,712	24,073	27,100	29,500
Lehi city	47,407	62,154	82,589	103,610	120,000	133,800
Lindon city	10,070	11,753	12,459	13,721	14,600	15,900
Mapleton city	7,979	10,762	13,752	16,901	19,500	21,300
Orem city	88,328	99,227	103,321	112,288	118,900	123,600
Payson city	18,294	22,832	41,144	49,496	58,500	67,200
Pleasant Grove city	33,509	40,034	42,062	47,053	51,200	54,500
Provo city	112,488	126,377	131,068	151,877	170,600	189,400
Salem city	6,423	11,363	27,102	33,649	40,100	45,200
Santaquin city (pt.)	9,128	17,594	32,075	39,774	46,700	52,900
Saratoga Springs city	17,781	33,514	58,496	78,987	107,900	134,000
Spanish Fork city	34,691	44,623	54,143	64,607	72,300	78,300
Springville city	29,466	37,094	45,078	51,971	57,500	61,600
Vineyard town	139	2,065	8,415	15,938	20,000	20,900
Woodland Hills city	1,344	1,943	3,001	3,764	4,700	5,300
Balance of Utah County	10,009	28,404	24,101	38,998	60,195	86,074
Wasatch County	23,530	32,741	44,549	59,159	76,389	96,696
Charleston town	415	533	941	1,611	2,953	5,592
Daniel town	938	1,058	1,600	2,626	4,152	6,430
Heber city	11,362	15,387	19,243	22,683	23,747	25,675
Hideout town	656	1,253	1,818	2,983	4,474	6,083
Independence town	164	174	306	611	1,168	2,307
Midway city	3,845	6,039	8,759	11,759	14,571	18,481
Park City city (pt.)	11	15	18	20	20	20
Wallsburg town	250	321	315	517	775	992
Balance of Wasatch County	5,889	7,960	11,549	16,349	24,528	31,116
Washington County	138,115	196,762	280,558	371,743	472,567	581,731
Apple Valley town	701	999	1,424	1,887	2,399	2,953
Enterprise city	1,711	2,438	3,476	4,605	5,854	7,207
Hildale city	2,726	3,884	5,537	7,337	9,327	11,482
Hurricane city	13,748	19,586	27,927	37,003	47,039	57,906
Ivins city	6,753	9,620	13,718	18,176	23,106	28,443
La Verkin city	4,060	5,784	8,247	10,928	13,891	17,100
Leeds town	820	1,168	1,666	2,207	2,806	3,454
New Harmony town	207	295	420	557	708	872
Rockville town	245	349	498	659	838	1,032
St. George city	72,897	103,851	148,078	196,206	249,421	307,037
Santa Clara city	6,003	8,552	12,194	16,157	20,540	25,284
Springdale town	529	754	1,075	1,424	1,810	2,228
Toquerville town	1,370	1,952	2,783	3,687	4,688	5,770
Virgin town	596	849	1,211	1,604	2,039	2,510
Washington city	18,761	26,727	38,110	50,496	64,192	79,020
Balance of Washington County	6,988	9,955	14,195	18,809	23,910	29,433

THE TOQUERVILLE CITY COUNCIL

212 N. Toquerville Blvd, Toquerville Utah

Hereby gives

Notice of Intent

To Prepare an Impact Fee Facilities Plan and Impact Fee Analysis for Water, Roads & Drainage, Parks and affiliated Trails within the entire City Limits of Toquerville City, Washington County, Utah.

This notice will be sent to the Spectrum newspaper, posted on the State website at http://pmn.utah.gov, posted on the Toquerville City website at www.toquerville.org, and posted in five places at least 24 hours in advance of this meeting. The five places are: (1.) City Office Board; (2.) Toquerville Post Office Kiosk; (3.) Toquerville Estates Kiosk; (4) Cholla Park Kiosk; (5) Westfield Road Kiosk.

/s/ Renee Garner, Toquerville City Recorder

THE TOQUERVILLE CITY COUNCIL

May 14, 2015
212 N. Toquerville Blvd, Toquerville Utah

Hereby gives

Notice of Public Hearing

and Notice of Intent to Adopt, Prepare and Enact

An Impact Fee Facilities Plan, Impact Fee Analysis and Impact Fees for Enactment for Water, Roads & Drainage, Parks and affiliated Trails within the entire City Limits of Toquerville City, Washington County, Utah. A public hearing will be held on Thursday, May 14, 2015 at 7:00 p.m. at 212 N Toquer Blvd. Toquerville, Utah. A copy of the plan and analysis can be viewed at 212 N. Toquerville Blvd. beginning May 5th.

NOTE: WORK MEETING WILL CONVENE AT 6:00 PM; REGULAR MEETING AND PUBLIC HEARING WILL CONVENE AT APPROXIMATELY 7:00 PM.

In compliance with the Americans with Disabilities Act, individuals needing special accommodations (including auxiliary communicative aids and services) during this meeting should notify Renée Garner at the City Office 635-1094, at least 48 hours in advance. This Notice will be sent at least 14 days prior to the meeting to the Spectrum newspaper, posted on the State website at http://pmn.utah.gov, posted on the Toquerville City website at www.toquerville.org, and in five places within the City limits of Toquerville: (1.) City Office Board; (2.) Toquerville Post Office Kiosk; (3.) Toquerville Estates Kiosk; (4) Cholla Park Kiosk; (5) Westfield Road Kiosk.

/s/ Renee Garner, Toquerville City Recorder

Toquerville City, Washington County
Corporate SEAL
UTAH

Period Setting

Analysis Name:	PEAK HOUR		
Project Name:	TOQUERVILLE	**No:**	1
Date:	3/11/2015	**City:**	Toquerville
State/Province:	UTAH	**Zip/Postal Code:**	84774
Country:	USA	**Client Name:**	TOQ. CITY
Analyst's Name:	KARL RASMUSSEN	**Edition:**	ITE-TGM 9th Edition

Land Use	Independent Variable	Size	Time Period	Method	Entry	Exit	Total
210 - Single-Family Detached Housing	Dwelling Units	520	Weekday, P.M. Peak Hour of Generator	Best Fit (LOG)	292	164	456

Traffic Reductions

Land Use	Entry Reduction	Adjusted Entry	Exit Reduction	Adjusted Exit
210 - Single-Family Detached Housing	0 %	292	0 %	164

External Trips

Land Use	External Trips	Pass-by%	Pass-by Trips	Non-pass-by Trips
210 - Single-Family Detached Housing	456	0 %	0	456

ITE Deviation Details

Weekday, P.M. Peak Hour of Generator	
Landuse	No deviations from ITE.
Methods	No deviations from ITE.
External Trips	210 - Single-Family Detached Housing ITE does not recommend a particular pass-by% for this case.

Summary

Total Entering	292
Total Exiting	164
Total Entering Reduction	0
Total Exiting Reduction	0
Total Entering Internal Capture Reduction	0
Total Exiting Internal Capture Reduction	0
Total Entering Pass-by Reduction	0
Total Exiting Pass-by Reduction	0
Total Entering Non-Pass-by Trips	292
Total Exiting Non-Pass-by Trips	164

Period Setting

Analysis Name:	WEEKDAY		
Project Name:	TOQUERVILLE	**No:**	1
Date:	3/11/2015	**City:**	Toquerville
State/Province:	UTAH	**Zip/Postal Code:**	84774
Country:	USA	**Client Name:**	TOQ. CITY
Analyst's Name:	KARL RASMUSSEN	**Edition:**	ITE-TGM 9th Edition

Land Use	Independent Variable	Size	Time Period	Method	Entry	Exit	Total
210 - Single-Family Detached Housing	Dwelling Units	520	Weekday	Best Fit (LOG)	2393	2393	4786

Traffic Reductions

Land Use	Entry Reduction	Adjusted Entry	Exit Reduction	Adjusted Exit
210 - Single-Family Detached Housing	0 %	2393	0 %	2393

External Trips

Land Use	External Trips	Pass-by%	Pass-by Trips	Non-pass-by Trips
210 - Single-Family Detached Housing	4786	0 %	0	4786

ITE Deviation Details

Weekday	
Landuse	No deviations from ITE.
Methods	No deviations from ITE.
External Trips	210 - Single-Family Detached Housing ITE does not recommend a particular pass-by% for this case.

Summary

Total Entering	2393
Total Exiting	2393
Total Entering Reduction	0
Total Exiting Reduction	0
Total Entering Internal Capture Reduction	0
Total Exiting Internal Capture Reduction	0
Total Entering Pass-by Reduction	0
Total Exiting Pass-by Reduction	0
Total Entering Non-Pass-by Trips	2393
Total Exiting Non-Pass-by Trips	2393

Single-Family Detached Housing
(210)

Average Vehicle Trip Ends vs: **Dwelling Units**
On a: **Weekday**
P.M. Peak Hour of Generator

Number of Studies: 362
Avg. Number of Dwelling Units: 174
Directional Distribution: 64% entering, 36% exiting

Trip Generation per Dwelling Unit

Average Rate	Range of Rates	Standard Deviation
1.02	0.42 - 2.98	1.05

Data Plot and Equation

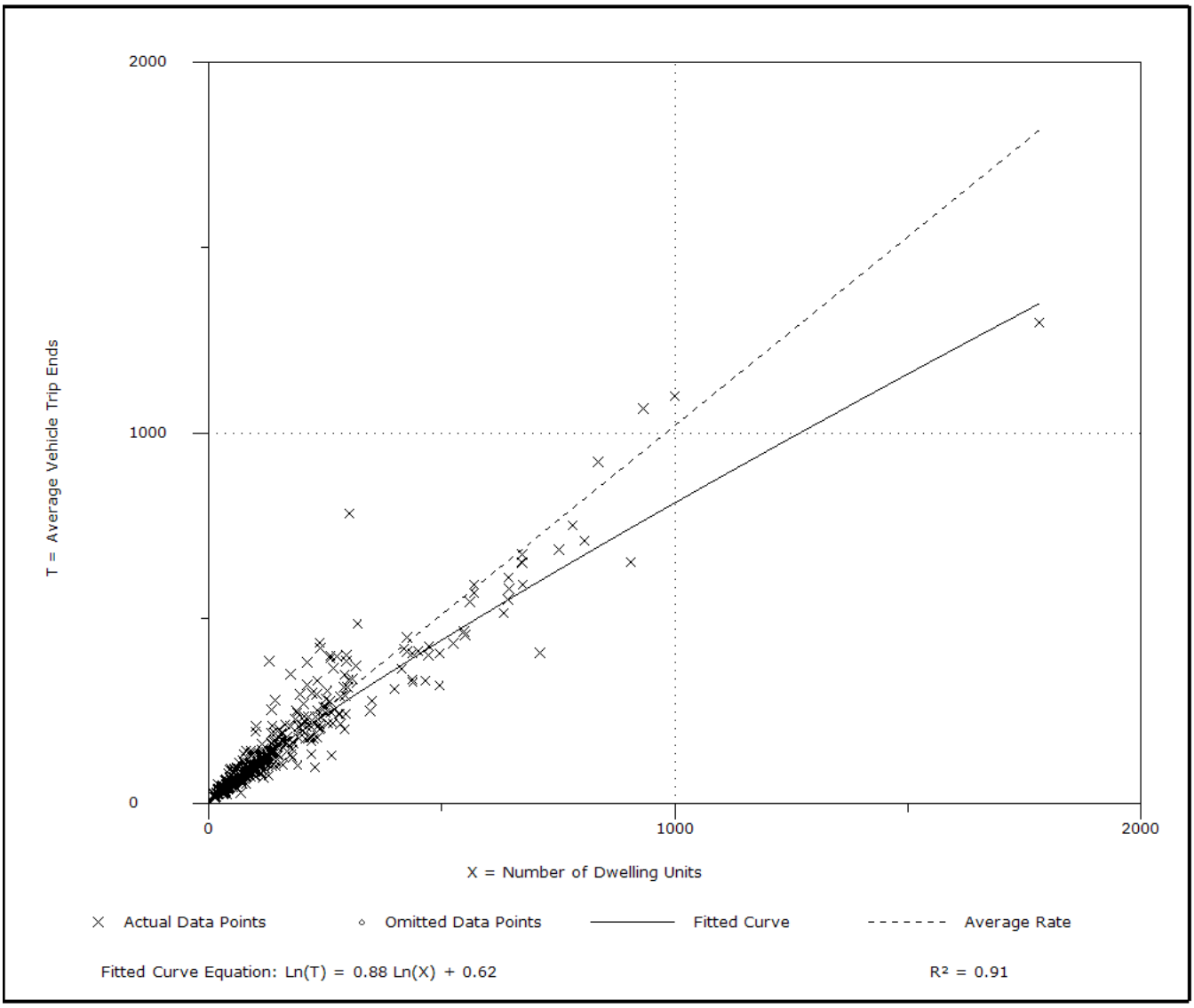

Single-Family Detached Housing
(210)

Average Vehicle Trip Ends vs: **Dwelling Units**
On a: **Weekday**

Number of Studies: 355
Avg. Number of Dwelling Units: 198
Directional Distribution: 50% entering, 50% exiting

Trip Generation per Dwelling Unit

Average Rate	Range of Rates	Standard Deviation
9.52	4.31 - 21.85	3.70

Data Plot and Equation

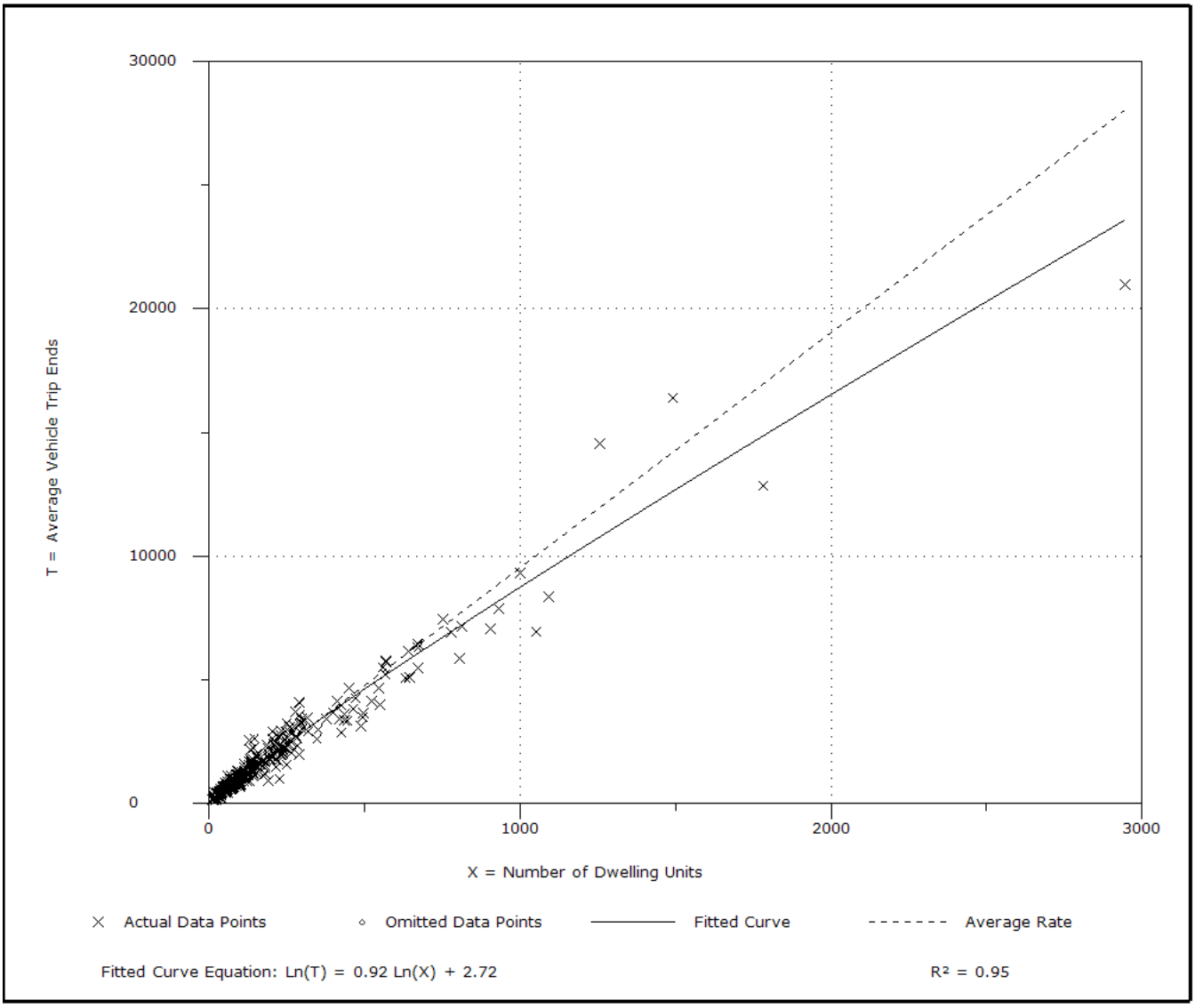

APPENDIX G

TOQUERVILLE FACILITY PLAN

PROJECT DETAIL SHEETS

Toquerville City Water System
Culinary Water Facility Plan Project Detail

Project Title: Cotton Gin/ Hillside Waterline	*Facility No.:* CW-01

Project Description:

Replace approximately 810 feet of 8" culinary waterline with valves, fire hydrants, meters and appurtenances.

Requirement/Need for Project:

This project is needed to replace waterline and upgrade the material to better serve the capacity needed in the future for fire and water use. Fire suppression capabilities will also be improved with these improvements.

Consequences of Not Performing Project:

Inability to meet the capacity and system requirements of the Utah State Code for Drinking Water Systems. The cost of maintenance of this system will increase exponentially. Immediate replacement will occur if pipelines are not replaced.

Other Issues: During 2016.	*Related Projects:* All other culinary water projects.

PROPOSED EXPENDITURES	**2016**	**2017 Through Build-Out**
Design/Engineering/Admin.	$9,000	$0
Land Acquisition/R.O.W.	$0	$0
Construction	$84,000	$0
Contingency	$9,000	$0
Other	$0	$0
TOTAL COST	$102,000	$0

Possible Funding Sources: Water Depreciation Fund and Water Impact Fees

Toquerville City Water System
Culinary Water Facility Plan Project Detail

Project Title: Springs Drive Water Tank	*Facility No.:* CW-02

Project Description:

Replace the 500,000 gallon concrete water tank on Springs Drive along with approximately 300 feet of water pipe, air valves, gate valves and appurtenances.

Requirement/Need for Project:

This project is needed to replace the water tank that is being repaired regularly. Good water quality will be more sustainable. The loss of water storage from the failure of a tank will be limited.

Consequences of Not Performing Project:

Inability to meet the capacity and system requirements of the Utah State Code for Drinking Water Systems. The cost of maintenance of this system will increase exponentially. Immediate replacement will occur if tank is not replaced.

Other Issues: For years 2017 to 2020	*Related Projects:* All other culinary water projects.

PROPOSED EXPENDITURES	**2016**	**2017 Through Build-Out**
Design/Engineering/Admin.	$0	$28,000
Land Acquisition/R.O.W.	$0	$0
Construction	$0	$275,000
Contingency	$0	$28,000
Other, Legal Fees	$0	$0
TOTAL COST	$0	$331,000

Possible Funding Sources: Water Depreciation Fund, Water Impact Fees, FUNDING from Division of Drinking Water, C.I.B., Rural Development and/or Division of Water Resources.

Toquerville City Water System
Culinary Water Facility Plan Project Detail

Project Title: Ash Creek Drive Water Line	*Facility No.:* CW-03

Project Description:

Replace approximately 3,700 feet of 8" culinary waterline with valves, fire hydrants, meters and appurtenances.

Requirement/Need for Project:

This project is needed to replace waterline and upgrade the material to better serve the capacity needed in the future for fire and water use. Fire suppression capabilities will also be improved with these improvements.

Consequences of Not Performing Project:

Inability to meet the capacity and system requirements of the Utah State Code for Drinking Water Systems. The cost of maintenance of this system will increase exponentially. Immediate replacement will occur if pipelines are not replaced.

Other Issues: During 2017 to 2025.	*Related Projects:* CW-04, ST-02

PROPOSED EXPENDITURES	**2016**	**2017 Through Build-Out**
Design/Engineering/Admin.	$0	$39,000
Land Acquisition/R.O.W.	$0	$0
Construction	$0	$382,000
Contingency	$0	$39,000
Other	$0	$0
TOTAL COST	$0	$460,000

Possible Funding Sources: Water Depreciation Fund and Water Impact Fees

Toquerville City Water System
Culinary Water Facility Plan Project Detail

Project Title: Berry Lane Water Line	*Facility No.:* CW-04

Project Description:

Replace approximately 380 feet of 8" culinary waterline with valves, fire hydrants, meters and appurtenances.

Requirement/Need for Project:

This project is needed to replace waterline and upgrade the material to better serve the capacity needed in the future for fire and water use. Fire suppression capabilities will also be improved with these improvements.

Consequences of Not Performing Project:

Inability to meet the capacity and system requirements of the Utah State Code for Drinking Water Systems. The cost of maintenance of this system will increase exponentially. Immediate replacement will occur if pipelines are not replaced.

Other Issues: During 2017 to 2025	*Related Projects:* CW-03

PROPOSED EXPENDITURES	**2016**	**2017 Through Build-Out**
Design/Engineering/Admin.	$0	$4,000
Land Acquisition/R.O.W.	$0	$0
Construction	$0	$40,000
Contingency	$0	$4,000
Other	$0	$0
TOTAL COST	$0	$48,000

Possible Funding Sources: Water Depreciation Fund and Water Impact Fees

Toquerville City Water System
Culinary Water Facility Plan Project Detail

Project Title: Cholla Creek Lane Water Line	*Facility No.:* CW-05

Project Description:

Replace approximately 5,000 feet of 8" culinary waterline with valves, fire hydrants, meters and appurtenances.

Requirement/Need for Project:

This project is needed to replace waterline and upgrade the material to better serve the capacity needed in the future for fire and water use. Fire suppression capabilities will also be improved with these improvements.

Consequences of Not Performing Project:

Inability to meet the capacity and system requirements of the Utah State Code for Drinking Water Systems. The cost of maintenance of this system will increase exponentially. Immediate replacement will occur if pipelines are not replaced.

Other Issues: During 2025 to 2035	*Related Projects:* CW-06

PROPOSED EXPENDITURES	**2016**	**2017 Through Build-Out**
Design/Engineering/Admin.	$0	$52,000
Land Acquisition/R.O.W.	$0	$0
Construction	$0	$520,000
Contingency	$0	$52,000
Other	$0	$0
TOTAL COST	$0	$624,000

Possible Funding Sources: Water Depreciation Fund and Water Impact Fees

Toquerville City Water System
Culinary Water Facility Plan Project Detail

Project Title: Hunter Lane	*Facility No.:* CW-06

Project Description:

Upgrade approximately 2,720 feet of 8" culinary waterline with valves, fire hydrants, meters and appurtenances.

Requirement/Need for Project:

This project is needed to replace waterline and upgrade the material to better serve the capacity needed in the future for fire and water use. Fire suppression capabilities will also be improved with these improvements.

Consequences of Not Performing Project:

Inability to meet the capacity and system requirements of the Utah State Code for Drinking Water Systems. The cost of maintenance of this system will increase exponentially. Immediate replacement will occur if pipelines are not replaced.

Other Issues: During 2025 to 2035	*Related Projects:* CW-05

PROPOSED EXPENDITURES	**2016**	**2017 Through Build-Out**
Design/Engineering/Admin.	$0	$24,000
Land Acquisition/R.O.W.	$0	$0
Construction	$0	$234,000
Contingency	$0	$24,000
Other, Legal Fees	$0	$0
TOTAL COST	$0	$282,000

Possible Funding Sources: City Water Fund, Loan from Division of Drinking Water or Water Resources.

Toquerville City Water System
Culinary Water Facility Plan Project Detail

Project Title: Westfield Tank Replacement	*Facility No.:* CW-07

Project Description:

Replace the 500,000 gallon steel water tank in Westfield's along with approximately 300 feet of water pipe, air valves, gate valves and appurtenances.

Requirement/Need for Project:

This project is needed to replace the water tank that is being repaired regularly. Good water quality will be more sustainable. The loss of water storage from the failure of a tank will be limited.

Consequences of Not Performing Project:

Inability to meet the capacity and system requirements of the Utah State Code for Drinking Water Systems. The cost of maintenance of this system will increase exponentially. Immediate replacement will occur if tank is not replaced.

Other Issues: : During 2025 to 2035	*Related Projects:* All other culinary water projects.

PROPOSED EXPENDITURES	**2016**	**2017 Through Build-Out**
Design/Engineering/Admin.	$0	$55,000
Land Acquisition/R.O.W.	$0	$0
Construction	$0	$550,000
Contingency	$0	$55,000
Other, Legal Fees	$0	$0
TOTAL COST	$0	$660,000

Possible Funding Sources: Water Depreciation Fund, Water Impact Fees, FUNDING from Division of Drinking Water, C.I.B., Rural Development and/or Division of Water Resources.

Toquerville City Street System
Capital Facility Plan Project Detail

Project Title: Hillside/Cotton Gin	*Facility No.:* ST-01

Project Description:

Street Improvements needed for 1,215 feet of Hillside and Cotton Gin Streets. Includes new curb & gutter, asphalt, and storm drain system.

Requirement/Need for Project:

The road is narrow and poses a safety and drainage hazard.

Consequences of Not Performing Project:

The high storm drainage will continue to run down roadway edge and deteriorate the asphalt and pavement or into lots own by property owners.

Other Issues: For 2016	*Related Projects:* CW-01

PROPOSED EXPENDITURES	**2016**	**2017 Through Build-Out**
Design/Engineering/Admin.	$20,000	$0
Land Acquisition/R.O.W.	$0	$0
Construction	$194,400	$0
Contingency	$20,000	$0
Other, Legal Fees	$0	$0
TOTAL COST	$234,400	$0

Possible Funding Sources: C&B Road Funds, Roadway Impact Fees

Toquerville City Street System
Capital Facility Plan Project Detail

Project Title: Ash Creek Drive	*Facility No.:* ST-02

Project Description:

Street Improvements needed for 3,700 feet of Ash Creek Drive in downtown Toquerville. Includes new curb & gutter, asphalt, and storm drain system.

Requirement/Need for Project:

The road is narrow and poses a safety and drainage hazard.

Consequences of Not Performing Project:

The high storm drainage will continue to run down roadway edge and deteriorate the asphalt and pavement or into lots own by property owners.

Other Issues: During 2017 to 2025.	*Related Projects:* CW-03

PROPOSED EXPENDITURES	**2016**	**2017 Through Build-Out**
Design/Engineering/Admin.	$0	$60,000
Land Acquisition/R.O.W.	$0	$0
Construction	$0	$592,000
Contingency	$0	$60,000
Other, Legal Fees	$0	$0
TOTAL COST	$0	$712,000

Possible Funding Sources: C&B Road Funds, Roadway Impact Fees

Toquerville City Street System
Capital Facility Plan Project Detail

Project Title: Shadow Creek Lane	*Facility No.:* ST-03

Project Description:

Street Improvements needed for 480 feet of a circle drive to help with the drainage and safety of the residents on Shadow Creek Lane. Includes new curb & gutter, asphalt, and storm drain system.

Requirement/Need for Project:

The road is narrow and poses a safety and drainage hazard.

Consequences of Not Performing Project:

The high storm drainage will continue to run down roadway edge and deteriorate the gravel or run into lots own by property owners.

Other Issues: During 2017 to 2025.	*Related Projects:* none

PROPOSED EXPENDITURES	**2016**	**2017 Through Build-Out**
Design/Engineering/Admin.	$0	$6,000
Land Acquisition/R.O.W.	$0	$0
Construction	$0	$52,800
Contingency	$0	$6,000
Other, Legal Fees	$0	$0
TOTAL COST	$0	$64,800

Possible Funding Sources: C&B Road Funds, Roadway Impact Fees

Toquerville City Street System
Capital Facility Plan Project Detail

Project Title: Hunter Lane	*Facility No.:* ST-04

Project Description:

Street Improvements needed for 2,720 feet of the drive to help with the drainage and safety of the residents in Cholla Creek and on Hunter Lane. Includes new curb & gutter, asphalt, and storm drain system.

Requirement/Need for Project:

The road is narrow and poses a safety and drainage hazard.

Consequences of Not Performing Project:

The high storm drainage will continue to run down roadway edge and deteriorate the gravel or run into lots own by property owners.

Other Issues: During 2025 to 2035.	*Related Projects:* none

PROPOSED EXPENDITURES	**2016**	**2017 Through Build-Out**
Design/Engineering/Admin.	$0	$44,000
Land Acquisition/R.O.W.	$0	$0
Construction	$0	$435,200
Contingency	$0	$44,000
Other, Legal Fees	$0	$0
TOTAL COST	$0	$523,200

Possible Funding Sources: C&B Road Funds, Roadway Impact Fees

Toquerville City Street System
Capital Facility Plan Project Detail

Project Title: Toquerville Heights Drainage	*Facility No.:* ST-05

Project Description:

Install new storm drain system to take care of Heights storm drainage need
.

Requirement/Need for Project:

Install 2,222 feet of storm drain system to take care of water running off the roadway and into adjacent lots.

Consequences of Not Performing Project:

Water will run into adjacent lots

Other Issues: During 2025 to 2035.	*Related Projects:* none

PROPOSED EXPENDITURES	**2016**	**2017 Through Build-Out**
Design/Engineering/Admin.	$0	$14,000
Land Acquisition/R.O.W.	$0	$0
Construction	$0	$133,320
Contingency	$0	$14,000
Other, Legal Fees	$0	$0
TOTAL COST	$0	$161,320

Possible Funding Sources: C&B Road Funds, Roadway Impact Fees

Toquerville City Street System
Capital Facility Plan Project Detail

Project Title: Toquerville Bypass Road	*Facility No.:* ST-06

Project Description:

Install 23,300 feet of roadway (highway) that is 32 feet wide with bridge, box culvert, turn lanes and storm pipe.
.

Requirement/Need for Project:

Traffic Counts are rising on Toquerville Boulevard (SR-59) as Zion National Park and other communities receive more visitors and residents.

Consequences of Not Performing Project:

Safety is the biggest reason. Someone will get hurt.

Other Issues: During 2025 to 2035.	*Related Projects:* none

PROPOSED EXPENDITURES	**2016**	**2017 Through Build-Out**
Design/Engineering/Admin.	$0	$720,000
Land Acquisition/R.O.W.	$0	$0
Construction	$0	$7,199,700
Contingency	$0	$720,000
Other, Legal Fees	$0	$0
TOTAL COST	$0	$8,639,700

Possible Funding Sources: C&B Road Funds, Roadway Impact Fees, UDOT and/or FED funds

Toquerville City Street System
Capital Facility Plan Project Detail

Project Title: Springs Drive	*Facility No.:* ST-07

Project Description:

Street Improvements needed for 2,305 feet of Springs Drive. Includes new curb & gutter, asphalt, and storm drain system.

Requirement/Need for Project:

The road is narrow and poses a safety and drainage hazard.

Consequences of Not Performing Project:

The high storm drainage will continue to run down roadway edge and deteriorate the asphalt and pavement or into lots own by property owners.

Other Issues: During 2025 to 2035.	*Related Projects:* none

PROPOSED EXPENDITURES	**2016**	**2017 Through Build-Out**
Design/Engineering/Admin.	$0	$33,000
Land Acquisition/R.O.W.	$0	$0
Construction	$0	$322,700
Contingency	$0	$33,000
Other, Legal Fees	$0	$0
TOTAL COST	$0	$388,700

Possible Funding Sources: C&B Road Funds, Roadway Impact Fees, UDOT and/or FED funds

Toquerville City Trail System
Capital Facility Plan Project Detail

Project Title: Bypass Road Trail	*Facility No.:* TR-01

Project Description:

Asphalt Trail Improvements needed for 23,300 feet of trail along the Bypass Route. Includes asphalt, and culverts.

Requirement/Need for Project:

As the community expands, the need for safe trails is needed.

Consequences of Not Performing Project:

Trail riders and hikers will have to resort to the highways and streets to commute or recreate.

Other Issues: During 2025 to 2035.	*Related Projects:* none

PROPOSED EXPENDITURES	**2016**	**2017 Through Build-Out**
Design/Engineering/Admin.	$0	$94,000
Land Acquisition/R.O.W.	$0	$0
Construction	$0	$932,000
Contingency	$0	$94,000
Other, Legal Fees	$0	$0
TOTAL COST	$0	$1,120,000

Possible Funding Sources: C&B Road Funds, Roadway Impact Fees, UDOT and/or FED funds

Toquerville City Trail System
Capital Facility Plan Project Detail

Project Title: Hunter-Highway Trail	*Facility No.:* TR-02

Project Description:

Asphalt Trail Improvements needed for 6700 feet of trail along Hunter Lane and Highway 17. Includes asphalt, and culverts.

Requirement/Need for Project:

As the community expands, the need for safe trails is needed.

Consequences of Not Performing Project:

Trail riders and hikers will have to resort to the highways and streets to commute or recreate.

Other Issues: During 2025 to 2035.	*Related Projects:* none

PROPOSED EXPENDITURES	**2016**	**2017 Through Build-Out**
Design/Engineering/Admin.	$0	$27,000
Land Acquisition/R.O.W.	$0	$0
Construction	$0	$268,000
Contingency	$0	$27,000
Other, Legal Fees	$0	$0
TOTAL COST	$0	$322,000

Possible Funding Sources: C&B Road Funds, Roadway Impact Fees, UDOT and/or FED funds

Toquerville City Trail System
Capital Facility Plan Project Detail

Project Title: Anderson Junction Trail	*Facility No.:* TR-03

Project Description:

Asphalt Trail Improvements needed for 14,300 feet of trail along Highway 17 from Toquerville to Anderson Junction. Includes asphalt, and culverts.

Requirement/Need for Project:

As the community expands, the need for safe trails is needed.

Consequences of Not Performing Project:

Trail riders and hikers will have to resort to the highways and streets to commute or recreate.

Other Issues: During 2025 to 2035.	*Related Projects:* none

PROPOSED EXPENDITURES	**2016**	**2017 Through Build-Out**
Design/Engineering/Admin.	$0	$58,000
Land Acquisition/R.O.W.	$0	$0
Construction	$0	$572,000
Contingency	$0	$58,000
Other, Legal Fees	$0	$0
TOTAL COST	$0	$688,000

Possible Funding Sources: C&B Road Funds, Roadway Impact Fees, UDOT and/or FED funds

Toquerville City Trail System
Capital Facility Plan Project Detail

Project Title: Frontage Road Trail	*Facility No.:* TR-04

Project Description:

Asphalt Trail Improvements needed for 9,900 feet of trail along I-15 Frontage Road. Includes asphalt, and culverts.

Requirement/Need for Project:

As the community expands, the need for safe trails is needed.

Consequences of Not Performing Project:

Trail riders and hikers will have to resort to the highways and streets to commute or recreate.

Other Issues: During 2025 to 2035.	*Related Projects:* none

PROPOSED EXPENDITURES	**2016**	**2017 Through Build-Out**
Design/Engineering/Admin.	$0	$40,000
Land Acquisition/R.O.W.	$0	$0
Construction	$0	$396,000
Contingency	$0	$40,000
Other, Legal Fees	$0	$0
TOTAL COST	$0	$476,000

Possible Funding Sources: C&B Road Funds, Roadway Impact Fees, UDOT and/or FED funds

Toquerville City Park System
Capital Facility Plan Project Detail

Project Title: Toquerville City Park	*Facility No.:* PK-01

Project Description:

Site improvements for 10.32 acres of Park to include infrastructure and amenities.

Requirement/Need for Project:

As the community expands, the need for safe parks with amenities is needed.

Consequences of Not Performing Project:

Residents will resort to non-safe areas to recreate.

Other Issues: During 2025 to 2035.	*Related Projects:* none

PROPOSED EXPENDITURES	**2016**	**2017 Through Build-Out**
Design/Engineering/Admin.	$0	$155,000
Land Acquisition/R.O.W.	$0	$0
Construction	$0	$1,548,000
Contingency	$0	$155,000
Other, Legal Fees	$0	$0
TOTAL COST	$0	$1,858,000

Possible Funding Sources: C&B Road Funds, Roadway Impact Fees, UDOT and/or FED funds

Toquerville City Park System
Capital Facility Plan Project Detail

Project Title: Trail Ridge Park	*Facility No.:* PK-02

Project Description:

Site improvements for 4.23 acres of Park to include infrastructure and amenities.

Requirement/Need for Project:

As the community expands, the need for safe parks with amenities is needed.

Consequences of Not Performing Project:

Residents will resort to non-safe areas to recreate.

Other Issues: During 2025 to 2035.	*Related Projects:* none

PROPOSED EXPENDITURES	**2016**	**2017 Through Build-Out**
Design/Engineering/Admin.	$0	$64,000
Land Acquisition/R.O.W.	$0	$0
Construction	$0	$634,500
Contingency	$0	$64,000
Other, Legal Fees	$0	$0
TOTAL COST	$0	$762,500

Possible Funding Sources: C&B Road Funds, Roadway Impact Fees, UDOT and/or FED funds

Toquerville City Park System
Capital Facility Plan Project Detail

Project Title: Almond Heights Park	*Facility No.:* PK-03

Project Description:

Site improvements for 2.07 acres of Park to include infrastructure and amenities.

Requirement/Need for Project:

As the community expands, the need for safe parks with amenities is needed.

Consequences of Not Performing Project:

Residents will resort to non-safe areas to recreate.

Other Issues: During 2025 to 2035.	*Related Projects:* none

PROPOSED EXPENDITURES	**2016**	**2017 Through Build-Out**
Design/Engineering/Admin.	$0	$32,000
Land Acquisition/R.O.W.	$0	$0
Construction	$0	$310,500
Contingency	$0	$32,000
Other, Legal Fees	$0	$0
TOTAL COST	$0	$374,500

Possible Funding Sources: C&B Road Funds, Roadway Impact Fees, UDOT and/or FED funds