Site Plan

1" = 80'-0" ON 11x17

Sheet: A001 — 1 of 1

Date: PRELIMINARY

Revisions	Rev. By	Ch. By	Dr. By	Job #
			SLB	

EWALK PROPERTY

Payson, Utah

COMMUNITY LAYOUT SITE PLAN

COPYRIGHT 2017 JWRA ARCHITECTS, LTD.
ALL DESIGNS, DRAWINGS AND WRITTEN MATERIAL APPEARING HEREIN CONSTITUTE THE ORIGINAL AND UNPUBLISHED WORK OF THE ARCHITECTS AND MAY NOT BE DUPLICATED, USED OR DISCLOSED WITHOUT THE WRITTEN CONSENT OF JWRA ARCHITECTS.

JWRA Architects
2299 S. Highland Dr., Ste. 200
Salt Lake City, UT 84106
Phone: (801) 486-7777
www.jwraia.com

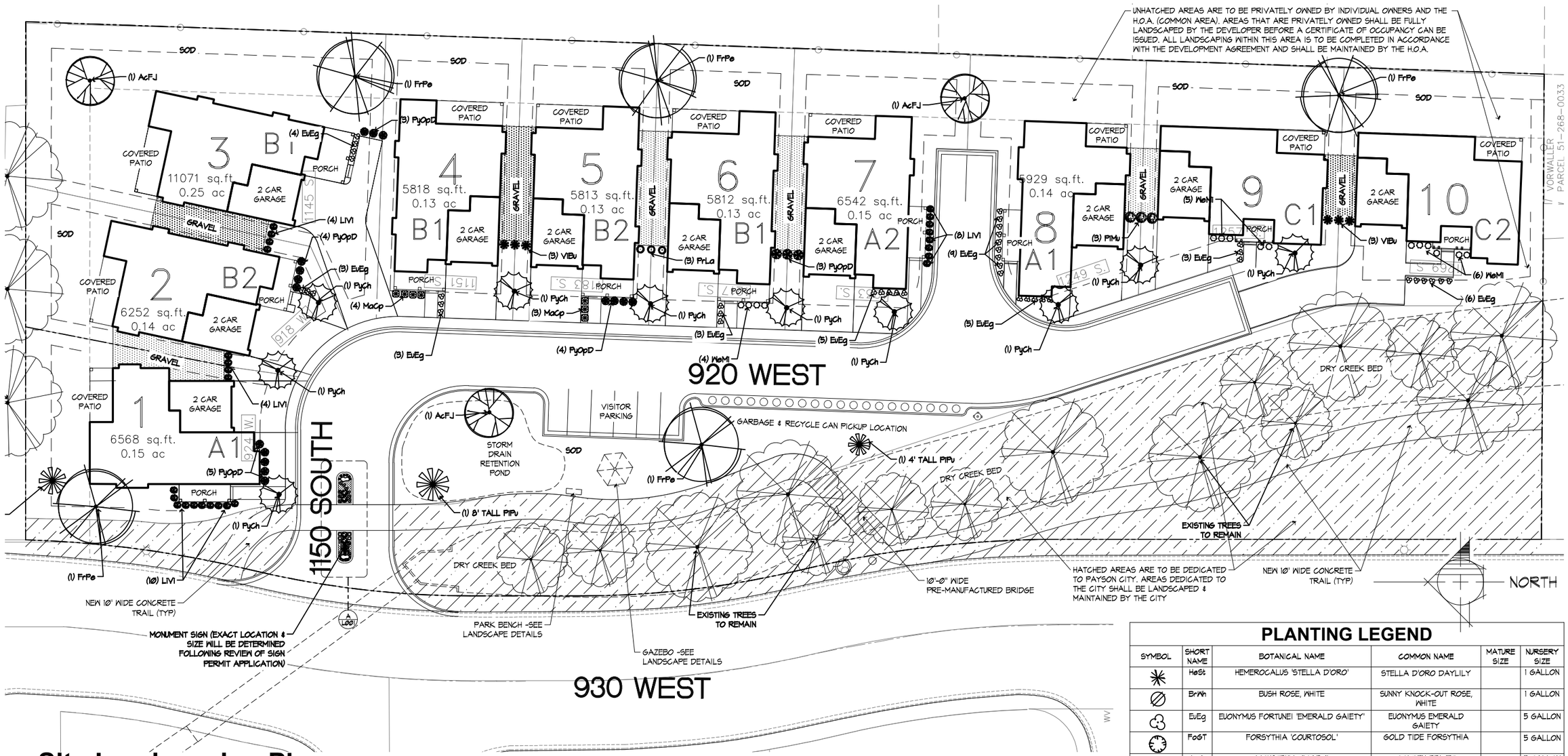

Site Landscaping Plan

1" = 20'-0"
(1" = 40'-0" ON 11x17)

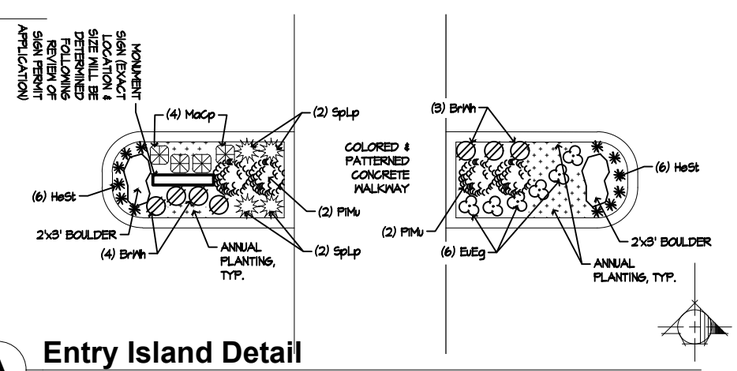

A Entry Island Detail

1" = 5'-0"
(1" = 10'-0" ON 11x17)

PLANTING LEGEND

SYMBOL	SHORT NAME	BOTANICAL NAME	COMMON NAME	MATURE SIZE	NURSERY SIZE
	HeSt	HEMEROCALIS 'STELLA D'ORO'	STELLA D'ORO DAYLILY		1 GALLON
	BrWh	BUSH ROSE, WHITE	SUNNY KNOCK-OUT ROSE, WHITE		1 GALLON
	EvEg	EUONYMUS FORTUNEI 'EMERALD GAIETY'	EUONYMUS EMERALD GAIETY		5 GALLON
	FoGT	FORSYTHIA 'COURTOSOL'	GOLD TIDE FORSYTHIA		5 GALLON
	LiVi	LIGUSTRUM VICARYI	GOLDEN PRIVET		5 GALLON
	MaCp	MAHONIA AQUAFOLIUM 'COMPACTA'	COMPACT OREGON GRAPE		5 GALLON
	PyOpD	PHYSOCARPUS OPULIFOLIUS 'DIABLO'	DIABLO NINEBARK		5 GALLON
	PIMu	PINUS MUGO 'PUMILIO'	DWARF MUGO PINE	4' TALL 6' WIDE	5 GALLON
	PrLa	PRUNUS LAUROCERASUS 'NANA'	DWARF ENGLISH LAUREL		5 GALLON
	SpLP	SPIREA JAPONICA 'LITTLE PRINCESS'	LITTLE PRINCESS SPIREA		5 GALLON
	VIBu	VIBURNUM BURKWOODII	BURKWOOD VIBURNUM	8' TALL 5' WIDE	
	WeMi	WEIGELA FLORIDA 'MINUET'	MINUET WEIGELA		5 GALLON
	AcFJ	ACER X FREEMANII JEFFERSRED	AUTUMN BLAZE MAPLE	35' TALL 25' WIDE	2" CAL.
	FrPe	FRAXINUS PENNSYLVANICA 'MARSHALL'S SEEDLESS'	MARSHALL'S SEEDLESS ASH	50' TALL 40' WIDE	2" CAL.
	PyCh	PYRUS CALLERYANNA 'CHANTICLEER'	CHANTICLEER PEAR	40' TALL 15' WIDE	2" CAL.

JWRA Architects
2299 S. Highland Dr., Ste. 200
Salt Lake City, UT 84106
Phone: (801) 486-7777
www.jwraia.com

COPYRIGHT 2018
JWRA ARCHITECTS
ALL RIGHTS RESERVED
ALL DESIGNS, DRAWINGS AND WRITTEN MATERIAL APPEARING HEREIN CONSTITUTE THE ORIGINAL & UNPUBLISHED WORK OF JWRA ARCHITECTS AND MAY NOT BE DUPLICATED, USED OR DISCLOSED WITHOUT THE WRITTEN CONSENT OF JWRA ARCHITECTS.

CREEK HOLLOW
Payson, Utah
COMMUNITY LANDSCAPE PLAN

Job #	
Dr. By	SLB
Ch. By	
Rev. By	
Revisions	
Date: APR 18, 2018	

Sheet: L001
1 of 3

12/12/2018 11:11 AM R:_PROJECTS\RESIDENTIAL\TURNER PROJECTS\PAYSON EVALK - CREEK HOLLOW\01_SITE\TURNER- EVALK- RESIDNG Plot:12/12/2018 11:12 AM

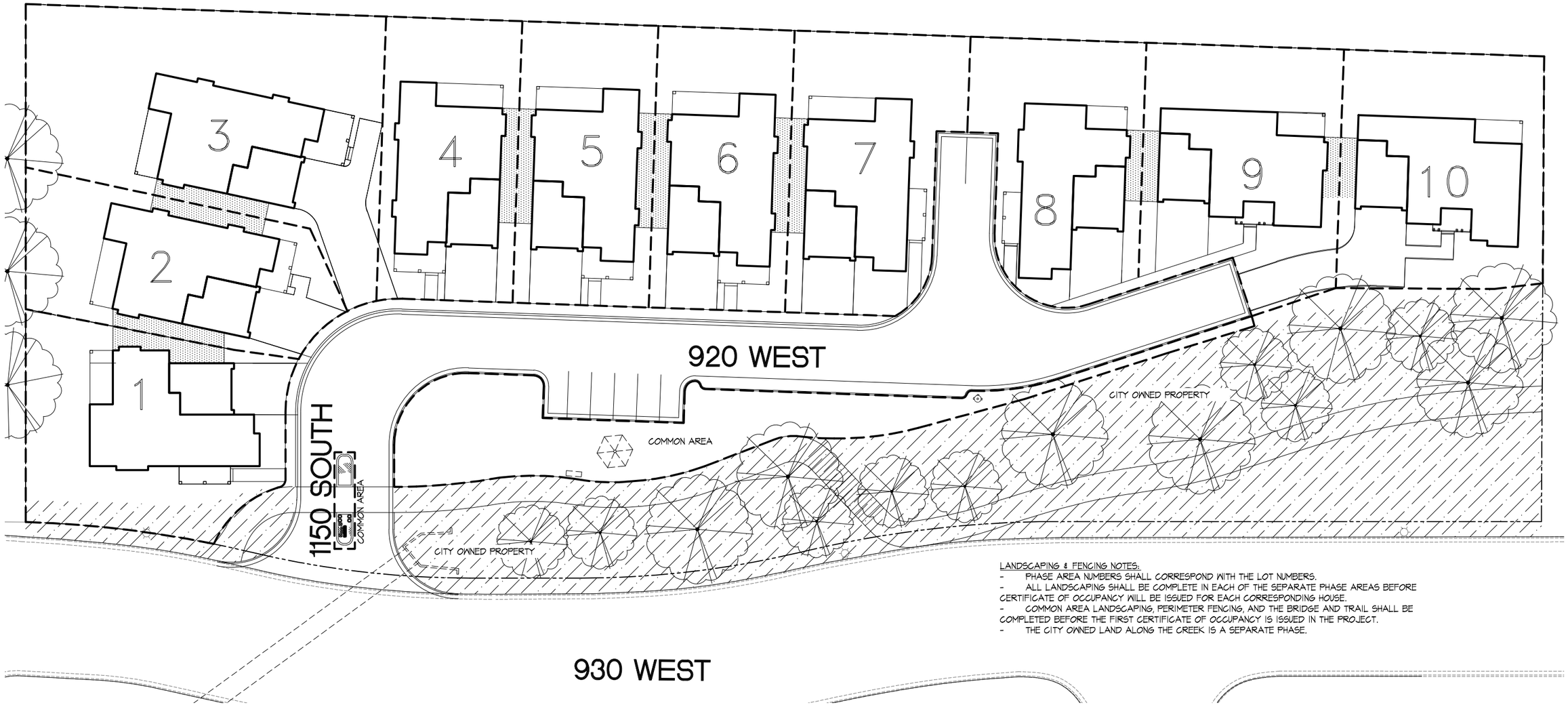

LANDSCAPING & FENCING NOTES:
- PHASE AREA NUMBERS SHALL CORRESPOND WITH THE LOT NUMBERS.
- ALL LANDSCAPING SHALL BE COMPLETE IN EACH OF THE SEPARATE PHASE AREAS BEFORE CERTIFICATE OF OCCUPANCY WILL BE ISSUED FOR EACH CORRESPONDING HOUSE.
- COMMON AREA LANDSCAPING, PERIMETER FENCING, AND THE BRIDGE AND TRAIL SHALL BE COMPLETED BEFORE THE FIRST CERTIFICATE OF OCCUPANCY IS ISSUED IN THE PROJECT.
- THE CITY OWNED LAND ALONG THE CREEK IS A SEPARATE PHASE.

Landscape Phasing Plan

1" = 20'-0"
(1" = 40'-0" ON 11x17)

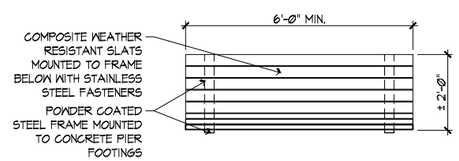

L04 **PARK BENCH DETAIL**
NO SCALE

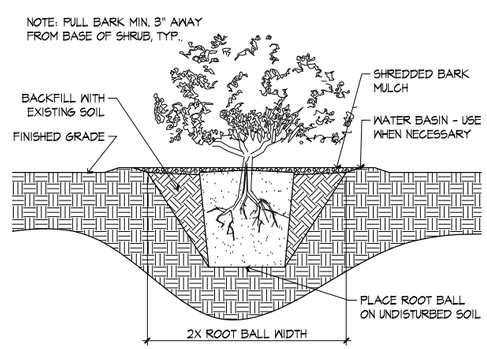

L03 **SHRUB PLANTING DETAIL**
NO SCALE

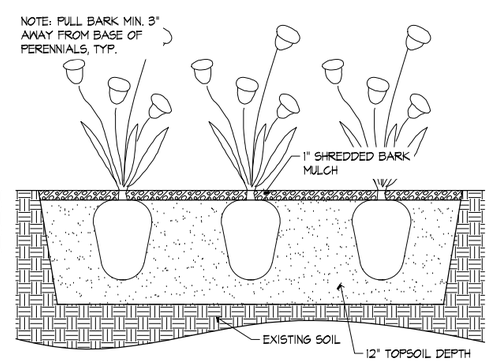

L02 **PERENNIAL PLANTING DETAIL**
NO SCALE

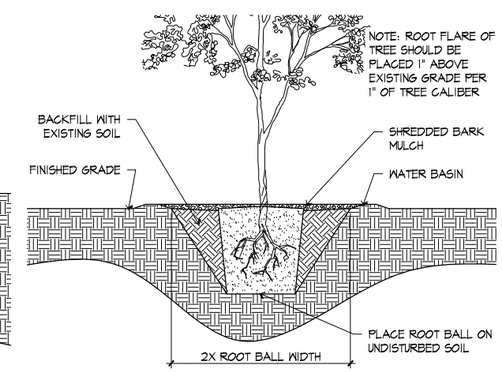

L01 **DECIDUOUS TREE PLANTING DETAIL**
NO SCALE

JWRA Architects
2299 S. Highland Dr., Ste. 200
Salt Lake City, UT 84106
Phone: (801) 486-7777
www.jwraia.com

COPYRIGHT 2018
JWRA ARCHITECTS
ALL RIGHTS RESERVED
ALL DESIGNS, DRAWINGS AND WRITTEN MATERIAL APPEARING HEREIN CONSTITUTE THE ORIGINAL & UNPUBLISHED WORK OF JWRA ARCHITECTS AND MAY NOT BE DUPLICATED, USED OR DISCLOSED WITHOUT THE WRITTEN CONSENT OF JWRA ARCHITECTS.

CREEK HOLLOW
Payson, Utah
LANDSCAPE DETAILS

Job #	
Dr. By	SLB
Ch. By	
Rev. By	
Revisions	
Date: APR 18, 2018	

Sheet:
L002
2 of 3

12/12/2018 11:11 AM R:_PROJECTS\RESIDENTIAL\TURNER PROJECTS\PAYSON EVALK- CREEK HOLLOW\01_SITE\TURNER- EVALK- RESIDNG Plot:12/12/2018 11:12 AM

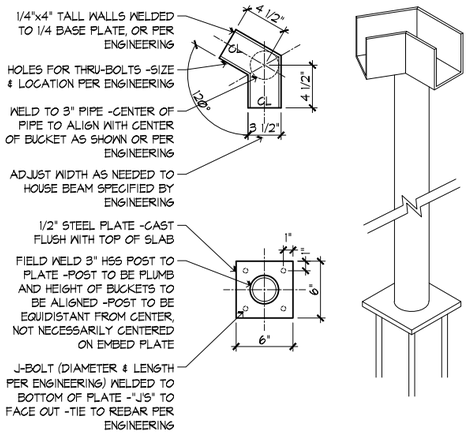

F EMBED PLATE & SADDLE DETAIL

1 1/2" = 1'-0" (3/4" = 1'-0" ON 11x17 PAPER)

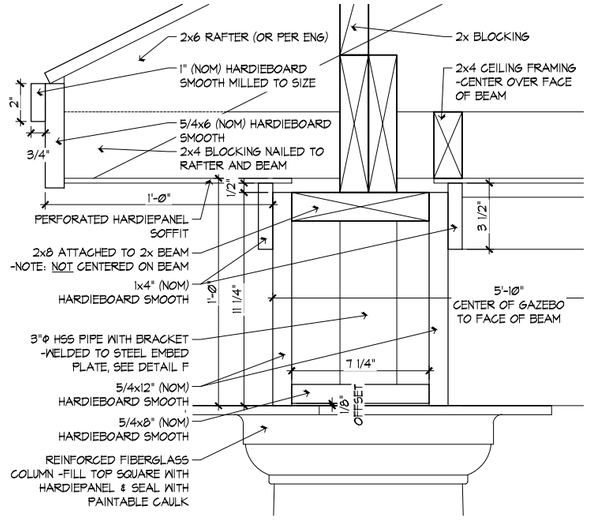

E BEAM/EAVE DETAIL

3" = 1'-0" (1 1/2" = 1'-0" ON 11x17 PAPER)

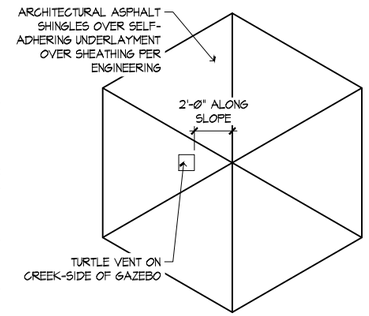

ROOF PLAN

1/4" = 1'-0" (1/8" = 1'-0" ON 11x17 PAPER)

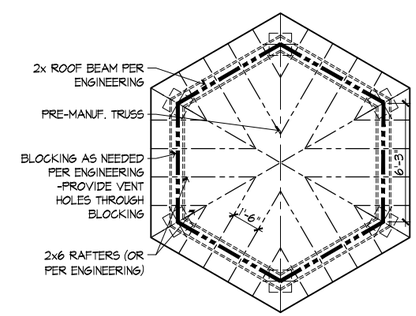

ROOF FRAMING PLAN

1/4" = 1'-0" (1/8" = 1'-0" ON 11x17 PAPER)

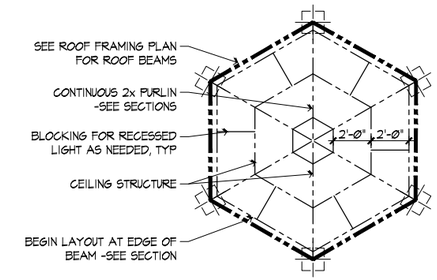

CEILING FRAMING PLAN

1/4" = 1'-0" (1/8" = 1'-0" ON 11x17 PAPER)

JWRA Architects
2299 S. Highland Dr., Ste. 200
Salt Lake City, UT 84106
Phone: (801) 486-7777
www.jwraia.com

COPYRIGHT 2018
JWRA ARCHITECTS
ALL RIGHTS RESERVED
ALL DESIGNS, DRAWINGS AND WRITTEN MATERIAL APPEARING HEREIN CONSTITUTE THE ORIGINAL & UNPUBLISHED WORK OF JWRA ARCHITECTS AND MAY NOT BE DUPLICATED, USED OR DISCLOSED WITHOUT THE WRITTEN CONSENT OF JWRA ARCHITECTS.

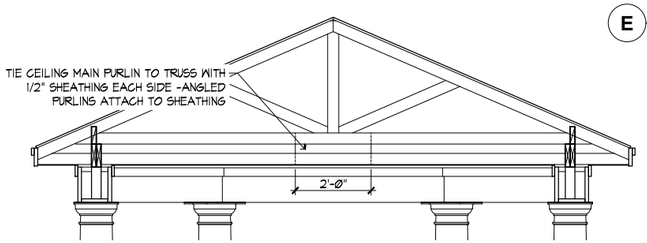

D SECTION

1/2" = 1'-0" (1/4" = 1'-0" ON 11x17 PAPER)

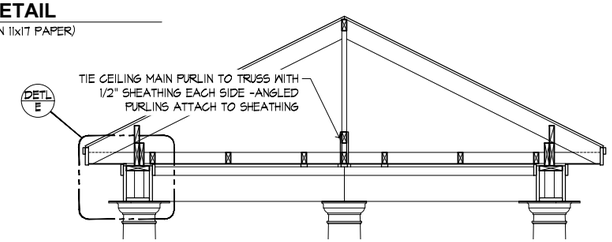

C SECTION

1/2" = 1'-0" (1/4" = 1'-0" ON 11x17 PAPER)

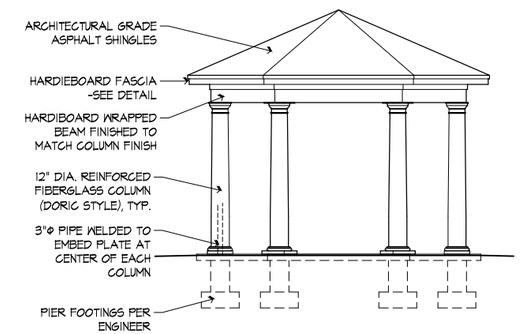

B ELEVATION

1/4" = 1'-0" (1/8" = 1'-0" ON 11x17 PAPER)

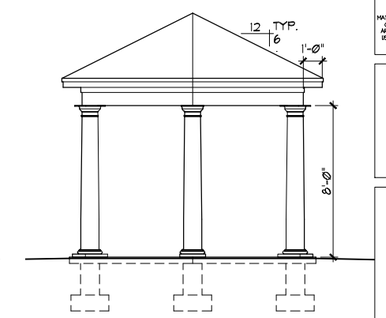

A ELEVATION

1/4" = 1'-0" (1/8" = 1'-0" ON 11x17 PAPER)

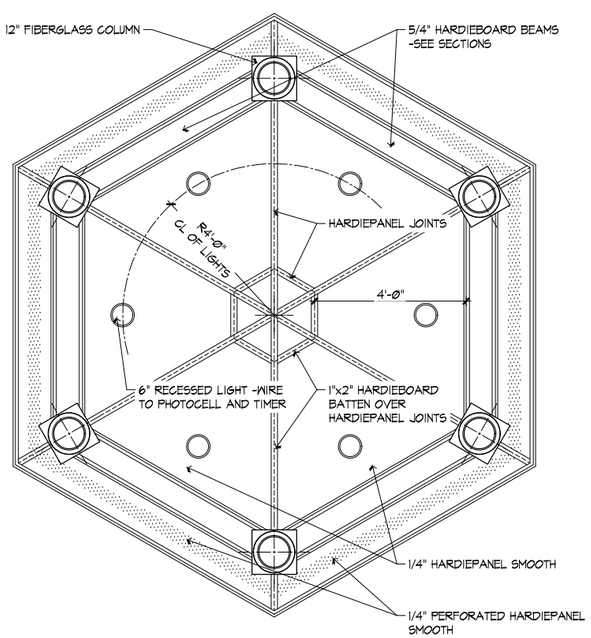

REFLECTED CEILING PLAN

1/2" = 1'-0" (1/4" = 1'-0" ON 11x17 PAPER)

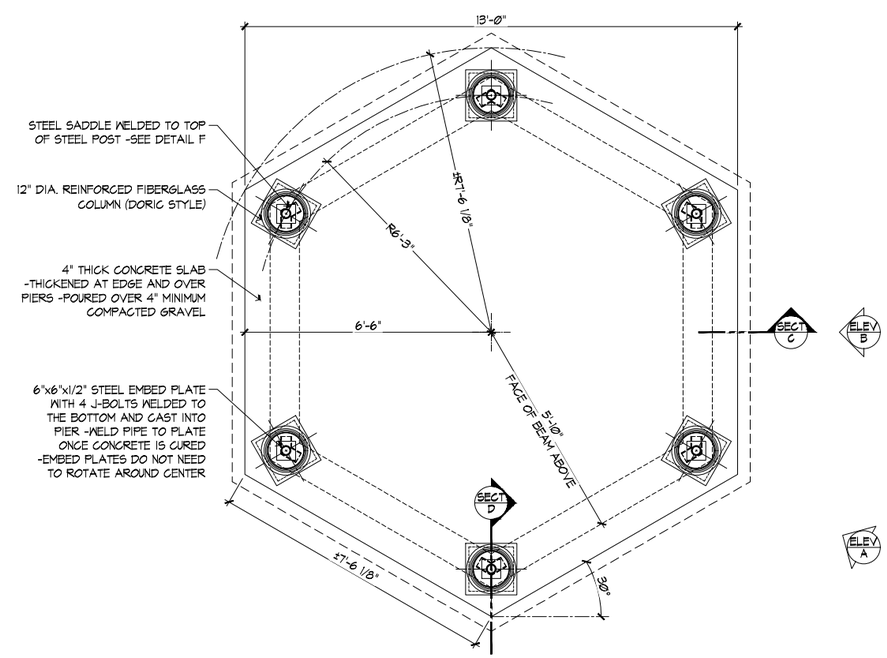

FLOOR PLAN

1/2" = 1'-0" (1/4" = 1'-0" ON 11x17 PAPER)

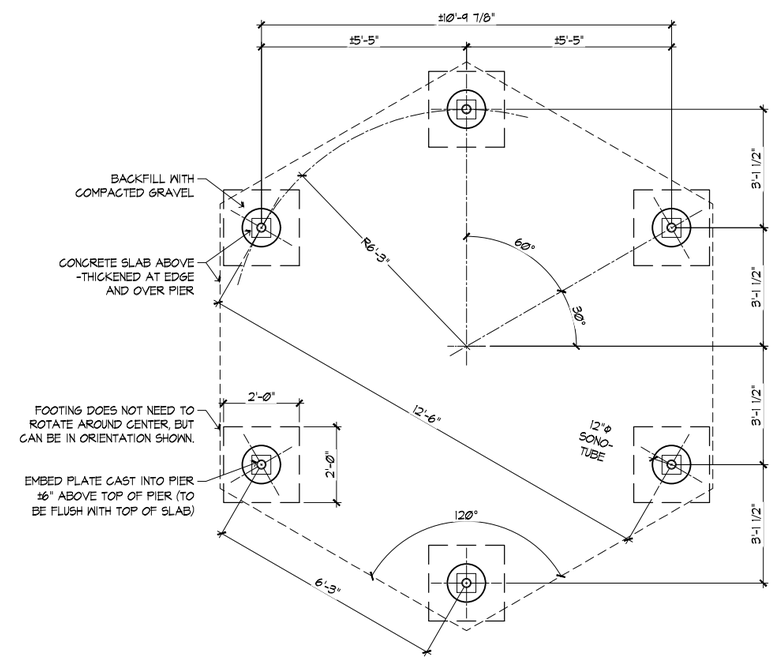

FOUNDATION PLAN

1/2" = 1'-0" (1/4" = 1'-0" ON 11x17 PAPER)

CREEK HOLLOW
Payson, Utah
LANDSCAPE DETAILS

Job #	
Dr. By	SLB
Ch. By	
Rev. By	
Revisions	
Date: APR 18, 2018	

Sheet:
L003
3 of 3

12/12/2018 11:11 AM R:_PROJECTS\RESIDENTIAL\TURNER PROJECTS\PAYSON EVALK- CREEK HOLLOW\01_SITE\TURNER- EVALK- RESDWG Plot:12/12/2018 11:12 AM

GAZEBO DETAILS

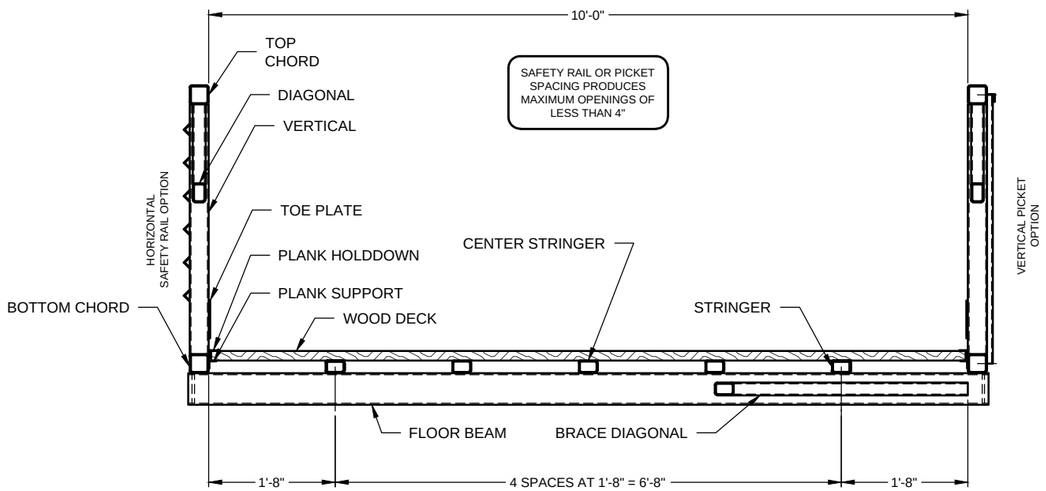

1/1 BRIDGE SECTION

GENERAL NOTES

1. DESIGN IS IN ACCORDANCE WITH THE MANUAL OF STEEL CONSTRUCTION FOLLOWING LOAD & RESISTANCE FACTOR DESIGN (LRFD) AS ADOPTED BY THE AMERICAN INSTITUTE OF STEEL CONSTRUCTION (AISC), LATEST EDITION.

2. BRIDGE MEMBERS ARE FABRICATED FROM HIGH STRENGTH, LOW ALLOY, ENHANCED ATMOSPHERIC CORROSION RESISTANT ASTM A847 COLD-FORMED WELDED SQUARE AND RECTANGULAR TUBING, AND ASTM A588, ASTM A606, OR ASTM A242 PLATE AND STRUCTURAL SHAPES (Fy=50,000 PSI).

3. BRIDGE DECKING NOMINAL 2-INCH THICK SELECT STRUCTURAL FIR (Fb=1,400 PSI min.) OR SOUTHERN YELLOW PINE (Fb=1,300 PSI min.). TIMBER DECK MATERIAL SHALL BE TREATED WITH ALKALINE COPPER QUATERNARY (ACQ) TO A 0.4 PCF RETENTION OR TO REFUSAL.

4. THE GAS METAL ARC WELDING PROCESS OR FLUX CORED ARC WELDING PROCESS WILL BE USED.

5. ALL TOP AND BOTTOM CHORD SHOP SPLICES TO BE COMPLETE PENETRATION TYPE WELDS.

6. UNLESS OTHERWISE NOTED, WELDED CONNECTIONS SHALL BE FILLET WELDS (OR HAVE THE EFFECTIVE THROAT OF A FILLET WELD) OF A SIZE EQUAL TO THE THICKNESS OF THE LIGHTEST GAGE MEMBER IN THE CONNECTION. WELDS SHALL BE APPLIED AS FOLLOWS:
   A. BOTH ENDS OF VERTICALS, DIAGONALS, BRACE DIAGONALS AND FLOOR BEAMS SHALL BE WELDED ALL AROUND.
   B. BOTTOM OF STRINGERS WILL BE STITCH WELDED TO TOP OF FLOOR BEAMS.
   C. MISCELLANEOUS NON-STRUCTURAL MEMBERS WILL BE STITCH WELDED TO THEIR SUPPORTING MEMBERS.

7. BRIDGE DESIGN WAS ONLY BASED ON COMBINATIONS OF THE FOLLOWING LOADS WHICH WILL PRODUCE MAXIMUM CRITICAL MEMBER STRESSES.
   A. 60 PSF UNIFORM LIVE LOADING ON THE FULL DECK AREA OR ONE 8,000 POUND VEHICLE LOAD. THE VEHICLE LOAD SHALL BE DISTRIBUTED AS A FOUR-WHEEL VEHICLE WITH 60% OF THE LOAD ON THE REAR WHEELS. THE WHEEL TRACK WIDTH OF THE VEHICLE SHALL BE 5'-0" AND THE WHEEL BASE SHALL BE 8'-6". THE VEHICLE SHALL BE POSITIONED SO AS TO PRODUCE THE MAXIMUM STRESS IN EACH MEMBER, INCLUDING DECKING.
   B. 25 PSF WIND LOAD ON THE FULL HEIGHT OF THE BRIDGE, AS IF ENCLOSED.
   C. 20 PSF UPWARD FORCE APPLIED AT THE WINDWARD QUARTER POINT OF THE TRANSVERSE BRIDGE WIDTH (AASHTO 3.15.3).

8. CLEANING: ALL EXPOSED SURFACES OF STEEL SHALL BE CLEANED IN ACCORDANCE WITH STEEL STRUCTURES PAINTING COUNCIL SURFACES PREPARATION SPECIFICATIONS NO. 7 BRUSH-OFF BLAST CLEANING. SSPC-SP7-LATEST EDITION.

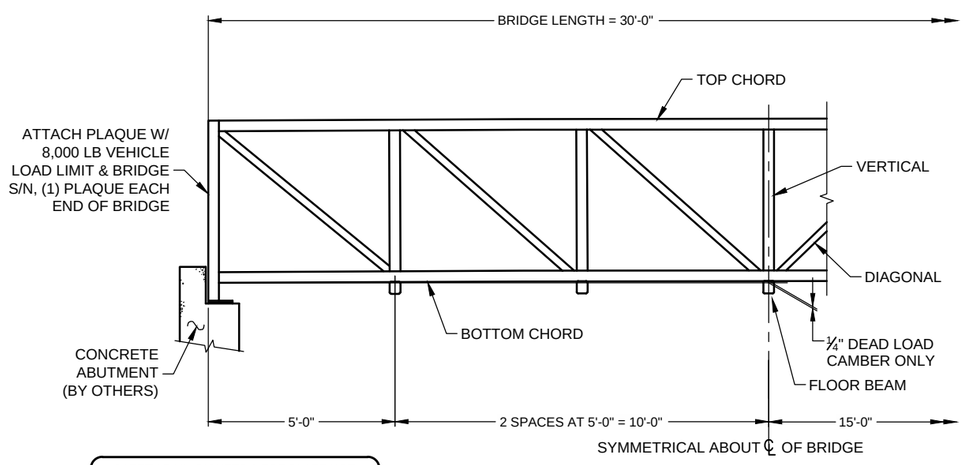

SAFETY RAIL, PICKETS & TOE PLATE NOT SHOWN IN ELEVATION. SEE BRIDGE SECTION FOR CORRECT NUMBER & LOCATION.

BRIDGE ELEVATION

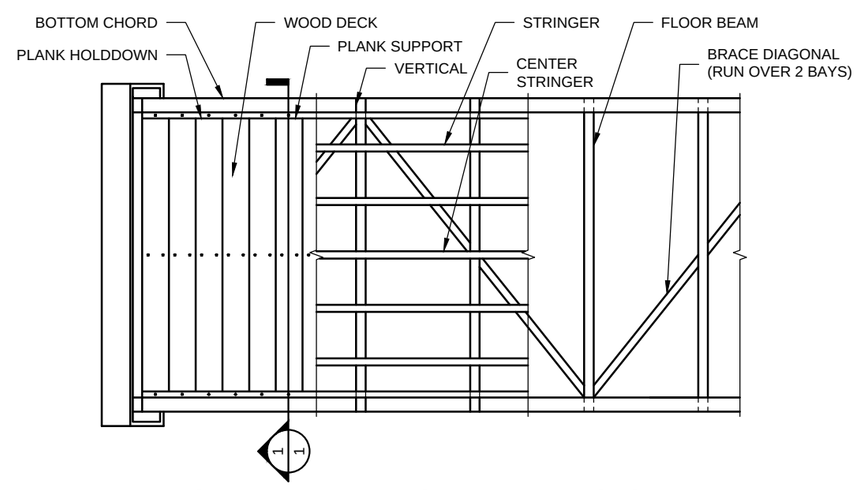

BRIDGE PLAN

CONTECH
PROPOSAL
DRAWING

AISC CERTIFIED FABRICATOR

The design and information shown on this drawing is provided as a service to the project owner, engineer and contractor by CONTECH Construction Products Inc. or owner's affiliated companies ("CONTECH"). Neither this drawing, nor any part thereof, may be used, reproduced or modified in any manner without the prior written consent of CONTECH. Failure to comply is done at the user's own risk and CONTECH expressly disclaims any liability or responsibility for such use.

If discrepancies between the supplied information upon which the drawing is based and actual field conditions are encountered as site work progresses, these discrepancies must be reported to CONTECH immediately. Thereafter, CONTECH shall not be held accepts no liability for designs based on missing, incomplete or inaccurate information supplied by others.

MARK	DATE	REVISION DESCRIPTION	BY

30'-0" x 10'-0"
STANDARD
PEDESTRIAN BRIDGE
XXX, XX

CONTECH CONSTRUCTION PRODUCTS INC.
www.contech-cpi.com
8301 State Highway 29 North, Alexandria, MN 56308
800-328-2047 320-852-7500 320-852-7067 FAX

CONTECH EXPRESS

DATE: XX/XX/XX	
DESIGNED:	DRAWN: N/A
CHECKED:	APPROVED:
PROJECT No.: XXXXX	SEQUENCE No.: 1
SHEET: 1 OF 1	

F:\ENGINEERING\PROJECT SHARK\30' BRIDGES\10' WIDE\30 x 10 WOOD\30 X 10 WOOD SALES DRAWING.DWG 4/6/2011 11:04 AM