Chairman
ROBERT OLIVER

City Attorney
NICK SAMPINOS

Community Director
NICK TATTON

City Recorder
SHERRIE GORDON

Commission

JUDY BEACCO
NANCY BENTLEY
DALE EVANS
ROBERT OLIVER
RICHARD ROOT
FRANKIE SACCO
JAN YOUNG
ERROLL HOLT, ALT.
TODD THORNE, ALT.

PRICE CITY PLANNING COMMISSION
phone: (435) 636-3184 · Fax: (435) 637-2905
185 E. Main - P.O. Box 893
Price, Utah 84501

PLANNING AND ZONING AGENDA
06/06/2016

THE PRICE CITY PLANNING AND ZONING COMMISSION WILL HOLD THEIR REGULARLY SCHEDULED MEETING ON THE ABOVE DATE AT 6:00 PM IN THE PRICE CITY HALL COUNCIL CHAMBERS (ROOM 104). THE PLANNING AND ZONING COMMISSION CHAIRMAN RESERVES THE RIGHT TO MODIFY THE SEQUENCE OF AGENDA ITEMS IN ORDER TO FACILITATE SPECIAL NEEDS.

1. PLEDGE OF ALLEGIANCE
2. ROLL CALL
3. MINUTES OF May 23, 2016
4. PUBLIC COMMENT ON AGENDA ITEMS
5. CONDITIONAL USE PERMIT
   a. ASSISTED LIVING FACILITY - Consideration and possible recommendation of final approval for development of an assisted living facility at 75 E 500 N within the Public Facilities (PF) zoning district, Beehive Homes, Richard Nuffer.
   b. SITE PLAN AMENDMENT - Consideration and possible approval of a site plan amendment for expansion of the bar/lounge at the Ramada Inn, 838 Westwood Blvd., Jim Patel.
6. UNFINISHED BUSINESS

Note: In compliance with the Americans with Disabilities Act, individuals needing special accommodations during this meeting should contact, City Recorder, Sherrie Gordon at 185 E. Main, Price, Utah - Telephone 636-3183 at least 24 hours prior to the meeting. This meeting may be held electronically via telephone to permit one or more of the council members to participate.

"DRAFT"

PRICE CITY PLANNING AND ZONING MEETING
MINUTES OF MAY 23, 2016

PRESENT:
Commissioners:
Nancy Bentley
Jan Young
Dale Evans
Robert Oliver
Judy Beacco
Richard Root
Todd Thorne

Nick Tatton, Community Director
Sherrie Gordon, City Recorder

EXCUSED: Commissioner Sacco
OTHERS PRESENT: Wayne Clausing, TH Poloni and Neal Baker

1. Chairman Oliver called the meeting to order at 6:00 P.M. He led the Pledge of Allegiance.

2. Roll was called with the above Commissioners and staff present.

3. MINUTES OF April 11, 2016 -
MOTION. Commissioner Young moved to approve the minutes of April 11, 2016 as presented. Motion seconded by Commissioner Evans and carried.

4. PUBLIC COMMENT ON AGENDA ITEMS – No public comment was received on any of the items.

5. CONDITIONAL USE PERMIT
a. ASSISTED LIVING FACILITY - Consideration and possible recommendation of final approval for development of an assisted living facility at 75 E 500 N within the Public Facilities (PF) zoning district, Beehive Homes, Richard Nuffer.

Due to Mr. Nuffer's or Mr. Nuffer's agent's or representative's absence, Item 5. a. was tabled.

MOTION. Commissioner Young moved to table Item 5. a. until the June 6th, 2016 meeting. Motion seconded by Commissioner Thorn and carried.

b. SITE PLAN AMENDMENT - Consideration and possible approval of a site plan amendment for expansion of the bar/lounge at the Ramada Inn, 838 Westwood Blvd., Jim Patel.

Due to Mr. Patel's or Mr. Patel's agent's or representative's absence, Item 5. b. was tabled.

MOTION. Commissioner Bentley moved to table Item 5. b. until the June 6th, 2016 meeting. Motion seconded by Commissioner Beacco and carried.

c. PERSONAL STORAGE AND FUTURE OFFICE - Consideration and possible approval of a conditional use permit for current personal storage and possible future professional office space at 30 S 100 W within the Commercial 1 (C-1) zoning district, TH Poloni.

A Conditional Use Permit (CUP) application was submitted by TH Poloni for a personal storage land use located at 30 South 100 West, within the Commercial 1 (C-1) zoning district. The application indicates personal storage only, not any customer oriented storage as well as potential future professional office space. The personal storage within the building is a conditional use, just as a commercial storage operation would be, and is indicated, generally, in Section 11.3.9.11 of the Price City Land Use Management and Development Code (Code), Section 11.3.9.11.11, Warehousing, a conditional use, also applies in terms of land use. The general evaluation criteria for the land use is listed in Section 11.1of the Code and the specific land use evaluation criteria and land use checklist is in Section 11.1.m of the Code.

The Planning Commission discussed the land use and specifically discussed occupancy restrictions with the applicant. Chairman Oliver read aloud the following conditions of approval and led a discussion:

- Personal Storage:
    - Occupancy and use restricted until completion of a building review by a credentialed structural engineer and renovations are completed in accordance with direction from the structural engineer finding that ensuring structural integrity of occupied structures protects the health safety and welfare of the community.
    - All renovations completed under the auspices of a Price City Building Permit and inspection finding that properly permitted and inspected renovations protect the health, safety and welfare of the community.
    - Compliance with all direction/requirements from the Price City Building Inspector and Price City Fire Chief regarding building renovation and safety.
    - No commercial or paid storage to be located in building; personal storage items only; no access by persons other than applicant; finding that restricted use and access protects the health, safety and welfare of the community.
    - Public infrastructure (curb-gutter-sidewalk) at building frontage repaired or replaces as directed by the Price City Engineer and Price City Building Inspector, meeting Price City minimum standards, finding that deteriorated public infrastructure may be a safety hazard.
    - No storage of any items exterior to the building finding that only interior personal storage is herein authorized.
- Professional Office Space:
    - Professional office space use and occupancy restricted until such time as renovation plans for any office space are approved and a Price City Building Permit with inspection is issued finding that restricted use and access protects the health, safety and welfare of the community. Includes both personal use and leased or paid use/occupancy.
- No signage installed on building without review and approval by the Price City Planning Department finding that properly reviewed and permitted signage mitigates the potential for confusion and increases commercial activity in the community.
- All existing signage and markings to be removed.
- Maintain building in a secure manner at all times finding that secured structures and properties that are not occupied mitigate the potential for theft and unnecessary use of the public safety resources in the community.
- No conditions at the property or structures that violate the Price City Property Maintenance Code finding that properly maintained properties and structures mitigate negative impacts to area property values and is consistent with the Price City General Plan.
- Mitigation and removal of all weeds, debris, rubbish from the property.
- Replacement of boarded windows and doors with operating windows and doors.
- Exterior treatment applied (painting, etc.)

ACCPETANCE: The applicant acknowledged that he is aware of the conditions of approval, understands the conditions of approval and intends to comply with the conditions of approval.

MOTION. Commissioner Root moved to recommend the Price City Council provide final approval for the personal storage land use only and the potential professional office space land use located at 30 South 100 West within the Commercial 1 (C-1) zoning district, based on the conditional land uses in Section(s) 11.3.9.11 of the Price City Land Use Management and Development Code (Code) and Section 11.3.9.11.11, Warehousing, the general evaluation criteria for the land uses listed in Section 11.1of the Code and the specific land use evaluation criteria and land use checklist is in Section 11.1.m of the Code. Motion seconded by Commissioner Evans and carried.

6. UNFINISHED BUSINESS – Nick Tatton reminded the Commissioners of the Land Use 101 Training available on June 11, 2016

Meeting adjourned at 6:12 p.m. pursuant to a motion by Commissioner Evans. Motion seconded by Commissioner Thorn and carried.

APPROVED: _____ ATTEST: _____

Chairman, Robert Oliver City Recorder, Sherrie Gordon

Mayor
JOE L PICCOLO
City Attorney
NICK SAMPINOS
Community Director
NICK TATTON
City Recorder
SHERRIE GORDON
Public Works Director
MILES NELSON

185 EAST MAIN • P.O. BOX 893 • PRICE, UT 84501
PHONE (435) 637-5010 • FAX (435) 637-2905
www.pricecityutah.com

Price City Planning & Zoning Commission

Planning & Zoning Commissioners
ROBERT OLIVER, CHAIR
FRANKIE SACCO, VICE CHAIR
JUDY BEACCO
DALE EVANS
NANCY BENTLEY
RICHARD ROOT
JAN YOUNG
ALTERNATE: TODD THORNE
ALTERNATE: ERROLL hOLT

DATE: **APRIL 29TH, 2016**

TO: **PRICE CITY PLANNING & ZONING COMMISSION**

FROM: **NICK TATTON**
PRICE CITY

RE: **ASSISTED LIVING CENTER**

Please find attached a Conditional Use Permit (CUP) application submitted by Richard Nuffer for locating an assisted care living center business at 75 E 500 N, called Beehive Homes of Price – Memory Care Center, within the Public Facilities (PF) zoning district. The PF zone accommodates public and quazi public as well as private land uses and, per Section 14.2.4 of the Price City Land Use Management and Development Code (Code) utilizes the 'most similar' land use codes for permitting purposes. In this case it is the Commercial 1 (C-1) zoning district requirements. The land use evaluation criteria for the PF zone district are listed in the in Section 14.1, paragraphs 1 thru 7 of the Code, the general land use evaluation criteria for the C-1 zone district are in Section 11.1 of the Code and the specific land use evaluation criteria/land use checklist for the C-1 zone district are in Section 11.1.m of the Code. The actual land use, Assisted Living Facility, is conditional and listed in Section 11.3.2.1.5.7 of the Code.

It is the recommendation of staff to thoroughly discuss the land use and development plan with the applicant and provide a recommendation of final approval to the Price City Council.

RECOMMENDED MOTION(S):

1. Move to provide recommend the Price City Council provide final approval for an Assisted Living Facility to be located at 75 E 500 N within the Public Facilities (PF) zoning district finding that the PF zone accommodates public and quazi public as well as private land uses and, per Section 14.2.4 of the Price City Land Use Management and Development Code (Code), utilizes the 'most similar' land use codes for permitting purposes, basing the final approval on the land use evaluation criteria for the PF zone district listed in the in Section 14.1, paragraphs 1 thru 7 of the Code, the general land use evaluation criteria for the C-1 zone district in Section 11.1 of the Code and the specific land use evaluation criteria/land use checklist for the C-1 zone district in Section 11.1.m of the Code, and the conditional land use, Assisted Living Facility, listed in Section 11.3.2.1.5.7 of the Code, and subject to the following conditions of concept approval:
    a. Development of location to be consistent with the final site plan submitted to Price City and with all direction received from Price City professional staff as it

relates to development and the site elements indicated below finding that agreed upon site development mitigates the potential for misunderstandings in the development process.

i. All on site exterior lighting to be high efficiency LED fixtures. All exterior lighting to be angled away from neighboring residential land uses and/or placed on timers and/or shielded from light transference to neighboring properties.
ii. Perimeter resident safety fence to be as indicted in location and design style. Specific approval for the six foot (6') height authorized finding that resident safety is improved and vehicle and pedestrian traffic is not negatively impacted by the fence. Fence must remain non-sight obscuring within a forty-foot (40') safety triangle at the intersection at all times.
iii. Utility connections to the site as indicated and as directed by the Price City Water, Sewer and Electric Departments in terms of size and location.
iv. Monument sign installed as indicated on site plan authorized. No other signage authorized without review and approval by the Price City Planning Department.
v. Right turn only upon exit from off street parking with signage.
vi. Garbage dumpster to be located and identified on final site plan in screened enclosure with gates.
vii. Landscaping installed as indicated on site plans meeting the minimum five percent (5%) requirement. All landscaping to be water wise.
viii. Installation of all required public infrastructure including, but not limited to, curb, gutter, sidewalk, street lighting, electrical transformers, street signage, street striping, public fire hydrants in accordance with submitted and accepted plans and as directed by the Price City Public Works Department.
    1. Completion of a public infrastructure development agreement, if and as required, with the Price City Public Works Department and submission of a financial surety guaranteeing the installation of public infrastructure.
    2. Completion of a private utility agreement, if and as required, with the Price City Public Works Department, regarding the installation of internal water systems and connection to the public water system.
ix. Development consistent with storm water management and geotechnical studies and information submitted to Price City and any direction from the Price City Engineer finding that development consistent with approved plans mitigates development confusion and ensures quality development consistent with the Price City General Plan.

b. Submission of building plans to the Price City building department for review and approval finding that properly submitted, reviewed and approved and inspected building construction protects the health, safety and welfare of the community.
    i. All construction to be completed under the auspices of a Price City building permit.
c. Application and receipt of Price City business license prior to opening and operation at site.
d. Site plan final approval authorized for "Phase 2" of the project including: (1) Option 1: second building; or (2) Option 2: up to nine (9) individual residential cottages.

        i. Utility connection plan approval and building plan approval and issuance of building permit by Price City for Phase 2 subject to additional review and approval.
        ii. Additional site plan elements required, including but not limited to, additional fencing, retaining walls, storm water management, off street parking, installation of additional public infrastructure, submission of additional or extended public infrastructure development agreement and surety
    e. No conditions at the property or structures, including hillside locations, that violate the Price City Property Maintenance Code finding that properly maintained property and structures mitigate deterioration of community property values and is consistent with the Price City General Plan.
2. Move to acknowledge that the applicant, applicants agents and representatives, are aware of the conditions of approval, understand the conditions of approval and intend to comply with the conditions of approval.

Fee:_____

CONDITIONAL USE PERMIT APPLICATION

Send all completed and properly signed forms (including attachments as necessary) along with applicable fees to: Price City Community Development Department, P.O. Box 893, 185 East Main, Price, UT 84501. For questions call (435) 636-3184.

Please check one.

☐ **New Business** *(Complete boxes 1 through 13 on page 1, and all subsequent pages)*

☒ **New Construction/Development** *(Check all applicable boxes below and complete entire application)*

Plan Phase:

☐ Concept
☐ Preliminary
☐ Final

PLEASE TYPE OR PRINT LEGIBLY.

Applicant Information		
1. Applicant's Name: BEEHIVE HOMES (RICHARD NUFFER)		2. Title: PRESIDENT
3. Applicant's Mailing Address: PO 129		4. Suite/Apt. No.:
5. City: ELMO	6. State: UT	7. Zip Code: 84521
8. County: EMERY	9. Telephone: (801) 893-2503	
Project Information		
10. Name of Project (Business): BEEHIVE HOMES OF PRICE - MEMORY CARE CENTER		
11. Address of Proposed Project: 75 E. 500 N. PRICE UT 84501		
12. Zone District *(see attached zoning map)*:		

Nature of Proposed Work *(Check all applicable items in boxes 13 through 16)*

13.	14.	15.	16.
☐ Sign	☐ Zone Change	☒ Excavation	☐ Industrial
☒ Commercial	☐ Storm Drainage	☐ Fill Work	☐ Annexation
☐ Residential	☐ Street Work	☒ Building	☐ Flood Plain
	☐ Road Dedication	☐ Subdivision	☐ Recreation
	☒ Water	☐ Apartments	☐ Street Opening
	☒ Sewer	☒ Electrical	☐ Demolition
17. Quarter Section(s):	18. Section(s):	19. Township(s):	20. Range(s) & Base:

21. Estimated Cost of Project:	22. Electrical Load Sheet:	23. Project Plans:
a) Site Work $ 100,000 b) Buildings $1,400,000 c) Other $ Total $1,500,000	*(Attach preliminary and final to application)*	☐ Plans Included ☐ Attachments (Number) _____

24. Brief Description of Project:

ASSISTED LIVING FACILITY WITH MEMORY CARE

25. Justification (Explain why this project is needed):

NO MEMORY CARE FACILITIES IN THIS OR NEIGHBORING COUNTIES.

26. Names and Addresses of Adjoining Property Owners, Lessees, Etc.:

NAME	ADDRESS (City, ST, Zip)	TELEPHONE
1.		( )
2.		( )
3.		( )

27. Estimated Starting Date: / /	28. Estimated Completion Date: / /	29. Has P.R.W.I.D. Sewer Survey Been Submitted? ☐ Yes ☐ No

Signature of Property Owner Date

Please Print Name Title

Currently Price City (nt)

Office Use Only

Recommendation of Planning and Zoning Administrator (Community Director):

☒ Approve
☐ Decline

Comments: Concept only. PF zone. use C1. 11.1 & 11.1.m evaluation criteria. Land use - Assisted living facility - Code Section 11.3.2.1.5.7 - conditional use.

Signature: Date: 9-11-15

Requires:

☒ Building Permit
☒ Conditional Use Permit
☐ Code Amendment
☐ Board of Adjustments Variance
☐ Flood Plain Development Permit
☒ Other: Busn Lic.

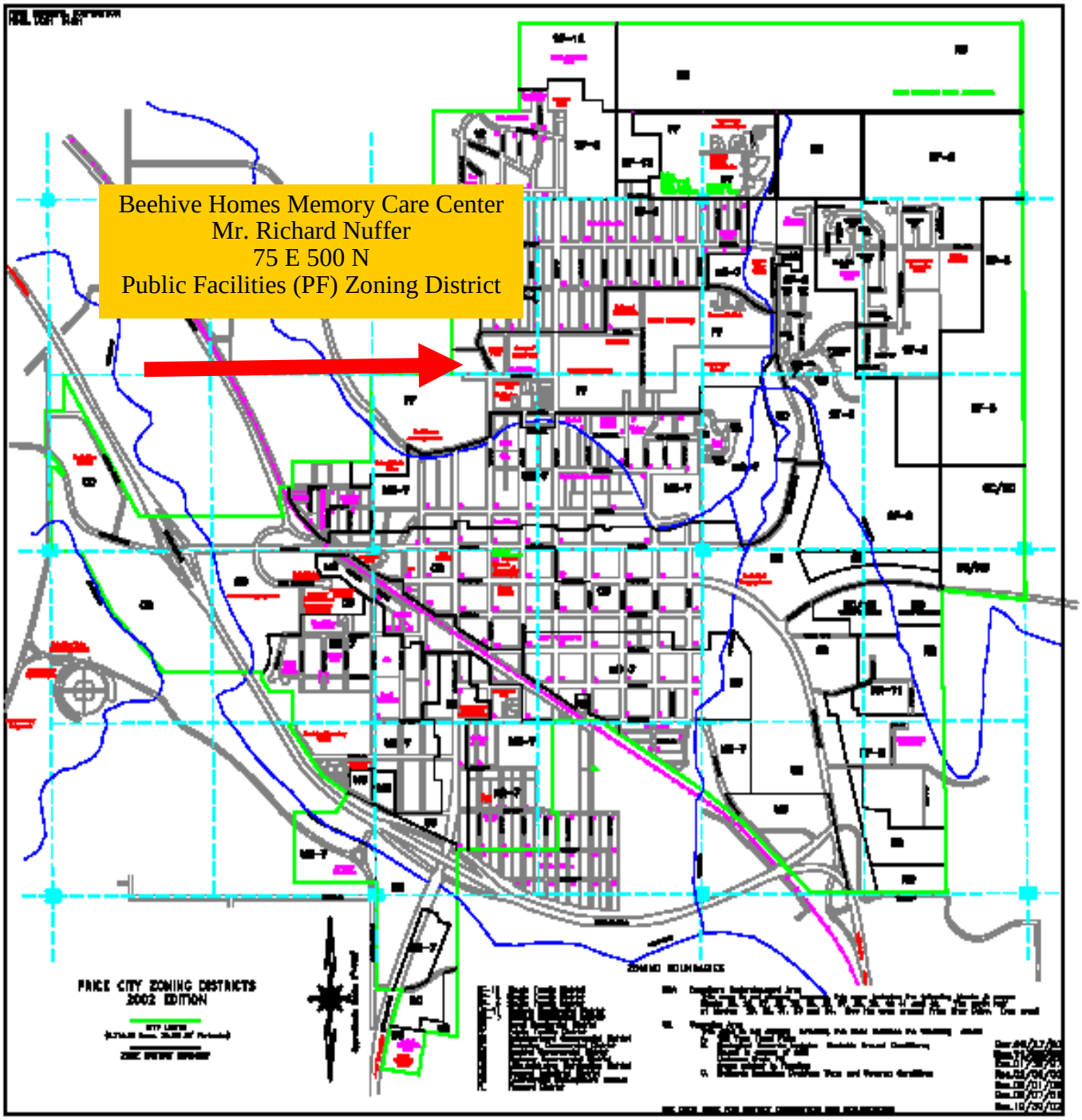
Beehive Homes Memory Care Center
Mr. Richard Nuffer
75 E 500 N
Public Facilities (PF) Zoning District
PRICE CITY ZONING DISTRICTS
2002 EDITION

TENDER CARE HOSPICE
ASSISTED LIVING FACILITY

5TH NORTH AND 1ST EAST STREET
PRICE CITY, UTAH

CONSULTANTS

ARCHITECT:

STEVE WARR:
727 WEST ALAN PT. DRIVE
DRAPER UTAH 84020
PHONE: 801-631-4748
EMAIL SMAJSET@GMAIL.COM

CIVIL ENGINEER:

ENSIGN ENGINEERING
CHAD THOMAS PE.
45 WEST 10000 SOUTH
SANDY CITY, UTAH 84070
PHONE: 801.255.0529
EMAIL: CTHOMAS@ENSIGNUTAH.COM

STRUCTURAL ENGINEER:

ENSIGN ENGINEERING
DAVID ALTER PE. SE.
45 WEST 10000 SOUTH
SANDY CITY, UTAH 84070
PHONE: 801.255.0529
EMAIL: DALTER@ENSIGNUTAH.COM

ELECTRICAL ENGINEER:

FELLEX ENGINEERING
SUSSI FELLESON
970 EAST CANYON BREEZE LN.
DRAPER UTAH 84020
PHONE: 801-523-5023
EMAIL: SUSSI@FELLEX.COM

MECHANICAL ENGINEER:

JARED THOMAS & ASSOC.
JARED THOMAS
SALT LAKE CITY UTAH
PHONE: 801-947-7652
EMAIL: JAREDTHOMAS@MSTAR.NET

VICINITY MAP

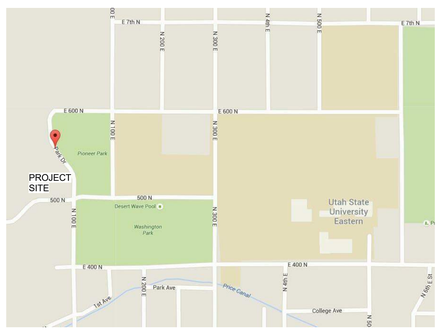

SHEET INDEX

0.0	COVER SHEET
1of1	SITE SURVEY
C-001	GENERAL NOTES
C-100	SITE PLAN
C-101	SITE PLAN OPTION 1
C-102	SITE PLAN OPTION 2
C-200	GRADING AND DRAINAGE PLAN
C-300	UTILITY PLAN
C-400	EROSION CONTROL PLAN
C-500	DETAILS
C-501	DETAILS
L-100	LANDSCAPE PLAN
L-200	LANDSCAPE DETAILS
A1.0	FLOOR PLAN
A1.1	REFLECTED CEILING PLAN
A1.2	ROOF PLAN
A2.0	BUILDING ELEVATIONS
A3.0	BUILDING SECTIONS
A4.0	WALL SECTIONS
A4.1	WALL SECTIONS
A5.0	DETAILS
A5.1	INTERIOR DETAILS
A6.0	SCHEDULES
A6.1	SCHEDULES
S0.0	GENERAL STRUCTURAL NOTES
S0.1	SPECIAL INSPECTION
S0.2	STRUCTURAL SCHEDULES
S0.3	STRUCTURAL SCHEDULES
S1.0	FOOTING & FOUNDATION PLAN
S2.0	WALL FRAMING PLAN
S3.0	ROOF FRAMING PLAN
S4.0	FOOTING & FOUNDATION DETAILS
S5.0	WALL FRAMING DETAILS
S6.0	ROOF FRAMING DETAILS

DIFFERED SUBMITTAL ITEMS:
FIRE SPRINKLER PLANS
PRE-ENGINEERED ROOF TRUSSES
FOOD SERVICE EQUIPMENT

CODE REVIEW

APPLICABLE CODES & STANDARDS FOR DESIGN CONSTRUCTION:
INTERNATIONAL BUILDING CODE (IBC) - 2012
INTERNATIONAL FIRE CODE (IFC) - 2012
INTERNATIONAL MECHANICAL CODE (IMC) - 2012
INTERNATIONAL PLUMBING CODE (IPC) - 2012
INTERNATIONAL RESIDENTIAL CODE (IRC) - 2012
NATIONAL ELECTRIC CODE - 2011
NFPA 101 LIFE SAFETY - 2012
IECC - 2012
ADA ANSI A117.1 - 2009

OCCUPANCY CATEGORY (TABLE 1604.5):	II
SEISMIC SITE CLASS (TABLE 1613.5.2):	D
SEISMIC DESIGN CATEGORY (TABLE 1613.5.6):	C
OCCUPANCY GROUPS (SECTION 308.4): TYPE II ASSISTED LIVING FACILITY SMALL SCALE (6-16 RESIDENTS)	I-2
CONSTRUCTION TYPE (SECTION 602):	V-A
FIRE SPRINKLER:	YES
HEIGHT:	ONE-STORY

ALLOWABLE AREA (SECTION 506.2)
BY FRONTAGE INCREASE:
AREA INCREASE = (580/580-0.25) 20/30 = 0.50
9,973(0.50) + 9,973 = 14,959.50SF
ACTUAL BUILDING AREA: = 9,973 SF
9,973SF < 14,959.50SF

EXTERIOR WALL AND OPENING PROTECTION (IBC TABLE 602):
0-HOUR FOR EXTERIOR WALLS OF NORTH, EAST, WEST & SOUTH (>30' TO PROPERTY)

FIRE-RESISTIVE REQUIREMENTS (IBC TABLE 601):
BY AUTOMATIC SPRINKLER SYSTEM (FOOTNOTE d):
0-HOUR FOR STRUCTURAL FRAMES, INT. BEARING WALLS, INT. NON-BEARING WALLS, FLOOR & ROOF CONSTRUCTION.

MINIMUM EGRESS REQUIREMENTS:
OCCUPANT LOADS (TABLE 1004.1.2)
OCCUPANT LOADS: 9,973SF/120SF GROSS = 83.1083

NO. OF EXITS REQUIRED (SECTION 1021):	2
NO. OF EXITS PROVIDED:	4

EGRESS WIDTH REQUIRED (SECTION 1005):
83.1083 x 0.2" = 16.621"
EGRESS WIDTH PROVIDED: 144"

MAXIMUM TRAVEL DISTANCE (TABLE 1016.2):	250'
COMMON PATH OF EGRESS TRAVEL (SECTION 1014.3):	75'
CORRIDOR FIRE-RESISTANCE RATING (TABLE 1018.1):	0-HOUR FIRE RATING
CORRIDOR WIDTH (SECTION 1018.2):	44" REQUIRED
CORRIDOR WIDTH PROVIDED:	72" MINIMUM

REQUIRED PLUMBING FIXTURES (TABLE 2902.1)
INTERNATIONAL PLUMBING CODE
(SECTION 419.2 & 410.1)

DRINKING FOUNTAIN:	1 PER 100 REQ'D; 1 PROV'D
SERVICE SINK:	1 REQ'D; 2 PROV'D

ENSIGN
THE STANDARD IN ENGINEERING

SALT LAKE CITY
45 W. 10000 S., Suite 500
Sandy, UT 84070
Phone: 801.255.0529

LAYTON
Phone: 801.547.1100

TOOELE
Phone: 435.843.3590

CEDAR CITY
Phone: 435.865.1453

RICHFIELD
Phone: 435.590.0187

WWW.ENSIGNENG.COM

CLIENT INFORMATION:
CLIENT INFORMATION:

TENDER CARE HOSPICE
ASSISTED LIVING FACILITY
5TH NORTH AND 1ST EAST STREET
PRICE CITY, UTAH

PERMIT 03/08/16

NO.	DATE	REVISION

COVER SHEET

PROJECT NUMBER
6803
DATE
12-31-15
DRAWN BY
R. MALIGON
PROJECT ENGINEER
A. HAWKINS
PROJECT MANAGER
C. DUNCAN

0.0

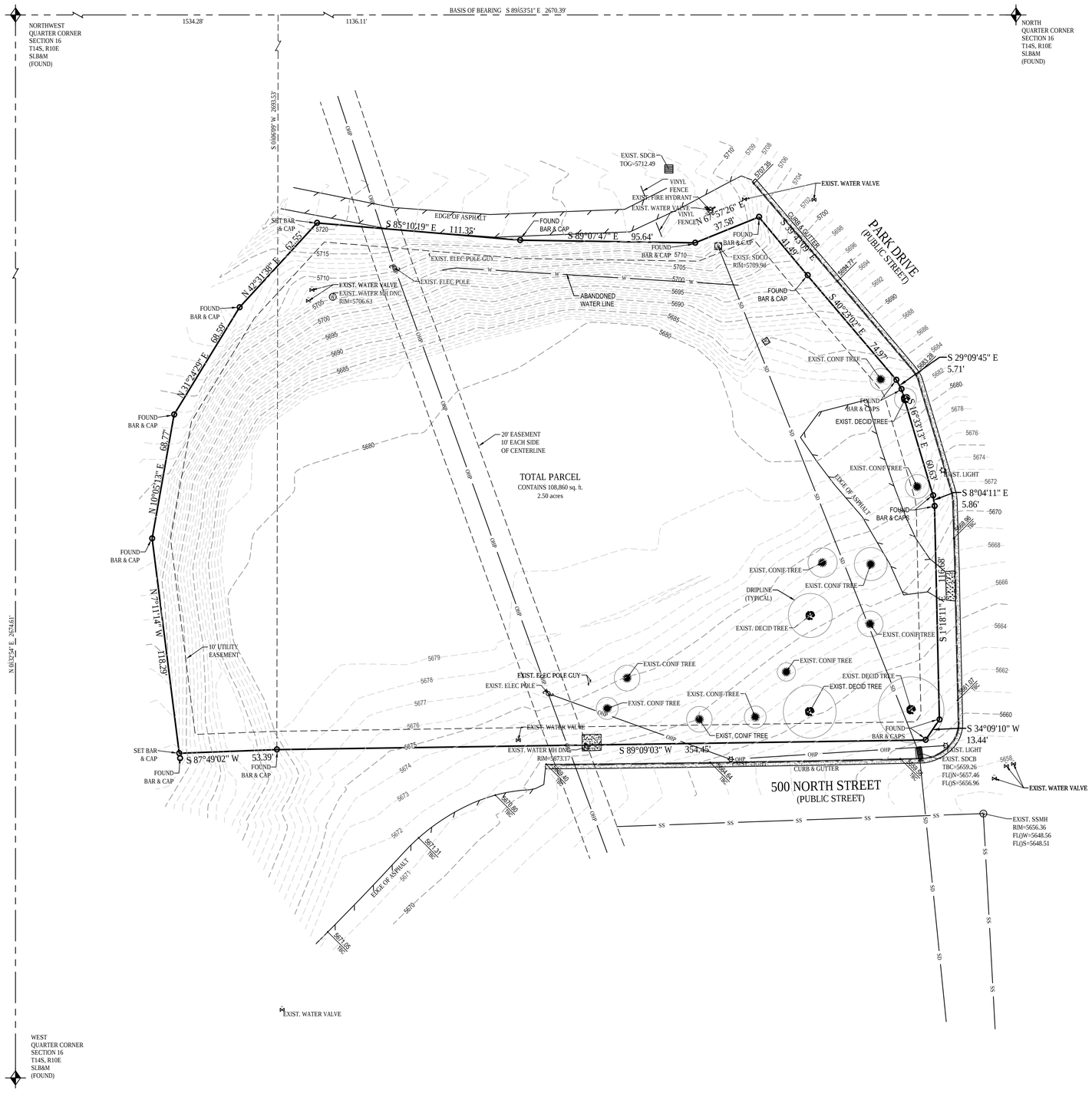

LEGEND

SECTION CORNER	MINOR CONTOURS 1' INCREMENT
MONUMENT	MAJOR CONTOURS 5' INCREMENT
SET NAIL & WASHER	CONCRETE
SET ENSIGN REBAR AND CAP	ADJACENT RIGHT OF WAY
WATER METER	RIGHT OF WAY
WATER MANHOLE	SECTION LINE
WATER VALVE	PROPERTY LINE
FIRE HYDRANT	ADJACENT PROPERTY LINE
IRRIGATION VALVE	DEED LINE
SANITARY SEWER MANHOLE	TANGENT LINE
STORM DRAIN CLEAN OUT	FENCE
STORM DRAIN CATCH BASIN	EDGE OF ASPHALT
STORM DRAIN COMBO BOX	SANITARY SEWER
SIGN	STORM DRAIN LINE
UTILITY MANHOLE	WATER LINE
UTILITY POLE	IRRIGATION LINE
GAS METER	TELEPHONE LINE
GAS LINE	OVERHEAD POWER

ENSIGN ENG. LAND SURV.

NORTH

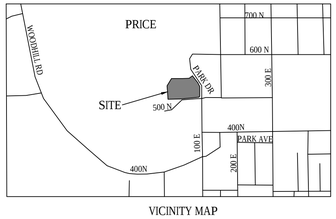

VICINITY MAP
(NOT TO SCALE)

HORIZONTAL GRAPHIC SCALE

30 0 15 30 60

(IN FEET)
HORZ: 1 inch = 30 ft.

LOCATED IN THE WEST HALF
OF SECTION 16
TOWNSHIP 14 SOUTH, RANGE 10 EAST
SALT LAKE BASE AND MERIDIAN
PRICE, CARBON COUNTY, UTAH

ENSIGN

SALT LAKE CITY
45 W. 10000 S., Suite 500
Sandy, UT 84070
Phone: 801.255.0529
Fax: 801.255.4449

LAYTON
Phone: 801.547.1100

TOOELE
Phone: 435.843.3590

CEDAR CITY
Phone: 435.865.1453

RICHFIELD
Phone: 435.590.0187

WWW.ENSIGNUTAH.COM

FOR:
TENDER CARE HOSPICE
503 WEST 2600 SOUTH, SUITE 200
BOUNTIFUL, UTAH 84010

CONTACT:
RICHARD NUFFER
PHONE: 801-294-0560
FAX:

PRICE MC ASSISTED LIVING CENTER BOUNDARY & TOPOGRAPHY SURVEY

PARK DRIVE & 500 NORTH STREET
PRICE, UTAH

BOUNDARY & TOPOGRAPHY SURVEY

PROJECT NUMBER 6803	PRINT DATE 01/13/2016
DRAWN BY B.HANEL	CHECKED BY P. HARRIS
PROJECT MANAGER P. HARRIS	

GENERAL NOTES

1. ALL CONSTRUCTION MUST STRICTLY FOLLOW THE STANDARDS AND SPECIFICATIONS SET FORTH BY: THE DESIGN ENGINEER, LOCAL AGENCY JURISDICTION, APWA (2012 EDITION), AND THE MANUAL ON UNIFORM TRAFFIC CONTROL DEVICES (M.U.T.C.D.). THE ORDER LISTED ABOVE IS ARRANGED BY SENIORITY. THE LATEST EDITION OF ALL STANDARDS AND SPECIFICATIONS MUST BE ADHERED TO. IF A CONSTRUCTION PRACTICE IS NOT SPECIFIED BY ANY OF THE LISTED SOURCES, CONTRACTOR MUST CONTACT DESIGN ENGINEER FOR DIRECTION.
2. CONTRACTOR TO STRICTLY FOLLOW THE MOST CURRENT COPY OF THE SOILS REPORT FOR THIS PROJECT. ALL GRADING INCLUDING BUT NOT LIMITED TO CUT, FILL, COMPACTION, ASPHALT SECTION, SUBBASE, TRENCH EXCAVATION/BACKFILL, SITE GRUBBING, AND FOOTINGS MUST BE COORDINATED DIRECTLY WITH SOILS REPORT.
3. CONTRACTOR MUST VERIFY ALL EXISTING CONDITIONS BEFORE BIDDING, AND BRING UP ANY QUESTIONS BEFORE SUBMITTING BID.
4. CONTRACTOR SHALL PROVIDE A CONSTRUCTION SCHEDULE IN ACCORDANCE WITH THE CITY, STATE, OR COUNTY REGULATIONS FOR WORKING IN THE PUBLIC WAY.
5. CONTRACTOR SHALL BE RESPONSIBLE FOR DUST CONTROL ACCORDING TO GOVERNING AGENCY STANDARDS. WET DOWN DRY MATERIALS AND RUBBISH TO PREVENT BLOWING.
6. CONTRACTOR SHALL BE RESPONSIBLE FOR ANY DAMAGE TO ADJACENT SURFACE IMPROVEMENTS.
7. CONTRACTOR SHALL BE RESPONSIBLE FOR CORRECTING ANY SETTLEMENT OF OR DAMAGE TO EXISTING UTILITIES.
8. THE CONTRACTOR IS RESPONSIBLE TO FURNISH ALL MATERIALS TO COMPLETE THE PROJECT.
9. UNLESS OTHERWISE NOTED, ALL ON-GRADE CONCRETE WILL BE PLACED ON A MINIMUM 4" GRAVEL BASE OVER A WELL COMPACTED (95% DENSITY PER ASTM D-1557) SUB GRADE.
10. ALL EXPOSED SURFACES WILL HAVE A TEXTURED FINISH, RUBBED, OR BROOMED. ANY "PLASTERING" OF NEW CONCRETE WILL BE DONE WHILE IT IS STILL "GREEN".
11. PRIOR TO STARTING CONSTRUCTION, THE CONTRACTOR SHALL BE RESPONSIBLE FOR VERIFYING THAT ALL REQUIRED PERMITS AND APPROVALS HAVE BEEN OBTAINED. NO CONSTRUCTION OR FABRICATION SHALL BEGIN UNTIL THE CONTRACTOR HAS RECEIVED AND THOROUGHLY REVIEWED ALL PLANS AND OTHER DOCUMENTS APPROVED BY ALL OF THE PERMITTING AUTHORITIES.
12. THE LOCATIONS OF UNDERGROUND FACILITIES SHOWN ON THESE PLANS ARE BASED ON FIELD SURVEYS AND LOCAL UTILITY COMPANY RECORDS. IT SHALL BE THE CONTRACTOR'S FULL RESPONSIBILITY TO CONTACT THE VARIOUS UTILITY COMPANIES TO LOCATE THEIR FACILITIES PRIOR TO PROCEEDING WITH CONSTRUCTION. NO ADDITIONAL COMPENSATION SHALL BE PAID TO THE CONTRACTOR FOR DAMAGE AND REPAIR TO THESE FACILITIES CAUSED BY HIS WORK FORCE. CONTRACTOR SHALL START INSTALLATION AT LOW POINT OF ALL NEW GRAVITY UTILITY LINES.
13. ALL DIMENSIONS, GRADES, AND UTILITY DESIGN SHOWN ON THE PLANS SHALL BE VERIFIED BY THE CONTRACTOR PRIOR TO CONSTRUCTION. CONTRACTOR SHALL NOTIFY THE ENGINEER IF ANY DISCREPANCIES EXIST, PRIOR TO PROCEEDING WITH CONSTRUCTION FOR NECESSARY PLAN OR GRADE CHANGES. NO EXTRA COMPENSATION SHALL BE PAID TO THE CONTRACTOR FOR WORK HAVING TO BE REDONE DUE TO THE DIMENSIONS OR GRADES SHOWN INCORRECTLY ON THESE PLANS, IF SUCH NOTIFICATION HAS NOT BEEN GIVEN.
14. NO CHANGE IN DESIGN LOCATION OR GRADE WILL BE MADE BY THE CONTRACTOR WITHOUT THE WRITTEN APPROVAL OF THE PROJECT ENGINEER.
15. NATURAL VEGETATION AND SOIL COVER SHALL NOT BE DISTURBED PRIOR TO ACTUAL CONSTRUCTION OF A REQUIRED FACILITY OR IMPROVEMENT. MASS CLEARING OF THE SITE IN ANTICIPATION OF CONSTRUCTION SHALL BE AVOIDED.
16. CONTRACTOR SHALL BE RESPONSIBLE FOR FURNISHING, MAINTAINING, OR RESTORING ALL MONUMENTS AND MONUMENT REFERENCE MARKS WITHIN THE PROJECT SITE. CONTACT THE CITY OR COUNTY SURVEYOR FOR MONUMENT LOCATIONS AND CONSTRUCTION DETAILS.
17. CONTRACTOR TO LAYOUT AND POTHOLE FOR ALL POTENTIAL CONFLICTS WITH UTILITY LINES ON- OR OFF-SITE AS REQUIRED PRIOR TO ANY CONSTRUCTION, AND THE CONTRACTOR WILL VERIFY DEPTHS OF UTILITIES IN THE FIELD BY POTHOLING A MINIMUM OF 300 FEET AHEAD OF PIPELINE CONSTRUCTION TO AVOID CONFLICTS WITH DESIGNED PIPELINE GRADE AND ALIGNMENT. IF A CONFLICT ARISES RESULTING FROM THE CONTRACTOR'S NEGLIGENCE TO POTHOLE UTILITIES, THE CONTRACTOR WILL BE REQUIRED TO RESOLVE THE CONFLICT WITHOUT ADDITIONAL COST OR CLAIM TO THE OWNER OR ENGINEER.
18. ANY AREA OUTSIDE THE LIMIT OF WORK THAT IS DISTURBED SHALL BE RESTORED TO ITS ORIGINAL CONDITION AT NO COST TO OWNER.
19. CONSULT ALL OF THE DRAWINGS AND SPECIFICATIONS FOR COORDINATION REQUIREMENTS BEFORE COMMENCING CONSTRUCTION.
20. AT ALL LOCATIONS WHERE EXISTING PAVEMENT ABUTS NEW CONSTRUCTION, THE EDGE OF THE EXISTING PAVEMENT SHALL BE SAWCUT TO A CLEAN, SMOOTH EDGE.
21. ALL CONSTRUCTION AND MATERIALS SHALL BE IN ACCORDANCE WITH THE MOST RECENT, ADOPTED EDITION OF ADA ACCESSIBILITY GUIDELINES.
22. CONTRACTOR SHALL, AT THE TIME OF BIDDING AND THROUGHOUT THE PERIOD OF THE CONTRACT, BE LICENSED IN THE STATE OF UTAH AND SHALL BE BONDABLE FOR AN AMOUNT REQUIRED BY THE OWNER.
23. CONTRACTOR SHALL BE RESPONSIBLE TO PROVIDE ALL WATER, POWER, SANITARY FACILITIES AND TELEPHONE SERVICES AS REQUIRED FOR THE CONTRACTOR'S USE DURING CONSTRUCTION.
24. CONTRACTOR SHALL BE RESPONSIBLE FOR ADEQUATELY SCHEDULING INSPECTION AND TESTING OF ALL FACILITIES CONSTRUCTED UNDER THIS CONTRACT. ALL TESTING SHALL CONFORM TO THE REGULATORY AGENCY'S STANDARD SPECIFICATIONS. ALL RE-TESTING AND/OR RE-INSPECTION SHALL BE PAID FOR BY THE CONTRACTOR.
25. IF EXISTING IMPROVEMENTS NEED TO BE DISTURBED AND/OR REMOVED FOR THE PROPER PLACEMENT OF IMPROVEMENTS TO BE CONSTRUCTED BY THESE PLANS, THE CONTRACTOR SHALL BE RESPONSIBLE FOR PROTECTING EXISTING IMPROVEMENTS FROM DAMAGE. COST OF REPLACING OR REPAIRING EXISTING IMPROVEMENTS SHALL BE INCLUDED IN THE UNIT PRICE BID FOR ITEMS REQUIRING REMOVAL AND/OR REPLACEMENT. THERE WILL BE NO EXTRA COST DUE TO THE CONTRACTOR FOR REPLACING OR REPAIRING EXISTING IMPROVEMENTS.
26. WHENEVER EXISTING FACILITIES ARE REMOVED, DAMAGED, BROKEN, OR CUT IN THE INSTALLATION OF THE WORK COVERED BY THESE PLANS OR SPECIFICATIONS, SAID FACILITIES SHALL BE REPLACED AT THE CONTRACTOR'S EXPENSE WITH MATERIALS EQUAL TO OR BETTER THAN THE MATERIALS USED IN THE ORIGINAL EXISTING FACILITIES. THE FINISHED PRODUCT SHALL BE SUBJECT TO THE APPROVAL OF THE OWNER, THE ENGINEER, AND THE RESPECTIVE REGULATORY AGENCY.
27. CONTRACTOR SHALL MAINTAIN A NEATLY MARKED SET OF FULL-SIZE RECORD DRAWINGS SHOWING THE FINAL LOCATION AND LAYOUT OF ALL STRUCTURES AND OTHER FACILITIES. RECORD DRAWINGS SHALL REFLECT CHANGE ORDERS, ACCOMMODATIONS, AND ADJUSTMENTS TO ALL IMPROVEMENTS CONSTRUCTED. WHERE NECESSARY, SUPPLEMENTAL DRAWINGS SHALL BE PREPARED AND SUBMITTED BY THE CONTRACTOR. PRIOR TO ACCEPTANCE OF THE PROJECT, THE CONTRACTOR SHALL DELIVER TO THE ENGINEER ONE SET OF NEATLY MARKED RECORD DRAWINGS SHOWING THE INFORMATION REQUIRED ABOVE. RECORD DRAWINGS SHALL BE REVIEWED AND THE COMPLETE RECORD DRAWING SET SHALL BE CURRENT WITH ALL CHANGES AND DEVIATIONS REDLINED AS A PRECONDITION TO THE FINAL PROGRESS PAYMENT APPROVAL AND/OR FINAL ACCEPTANCE.
28. WHERE THE PLANS OR SPECIFICATIONS DESCRIBE PORTIONS OF THE WORK IN GENERAL TERMS BUT NOT IN COMPLETE DETAIL, IT IS UNDERSTOOD THAT ONLY THE BEST GENERAL PRACTICE IS TO PREVAIL AND THAT ONLY MATERIALS AND WORKMANSHIP OF THE FIRST QUALITY ARE TO BE USED.
29. ALL EXISTING GATES AND FENCES TO REMAIN UNLESS OTHERWISE NOTED ON PLANS. PROTECT ALL GATES AND FENCES FROM DAMAGE.
30. ALL EXISTING TREES ARE TO REMAIN UNLESS OTHERWISE NOTED ON PLANS. PROTECT ALL TREES FROM DAMAGE.
31. ASPHALT MIX DESIGN MUST BE SUBMITTED AND APPROVED BY THE CITY ENGINEER PRIOR TO THE PLACEMENT OF ASPHALT WITHIN THE CITY RIGHT-OF-WAY.
32. CONTRACTORS ARE RESPONSIBLE FOR ALL OSHA REQUIREMENTS ON THE PROJECT SITE.
33. A UPDES (UTAH POLLUTANT DISCHARGE ELIMINATION SYSTEM) PERMIT IS REQUIRED FOR ALL CONSTRUCTION ACTIVITIES 1 ACRE OR MORE AS WELL AS A STORM WATER POLLUTION PREVENTION PLAN.

UTILITY NOTES

1. ALL CONSTRUCTION AND MATERIALS SHALL BE IN ACCORDANCE WITH THESE CONTRACT DOCUMENTS, CITY AND STATE REQUIREMENTS AND THE MOST RECENT EDITIONS OF THE FOLLOWING: THE INTERNATIONAL PLUMBING CODE, UTAH DRINKING WATER REGULATIONS, APWA MANUAL OF STANDARD PLANS AND SPECIFICATIONS. THE CONTRACTOR IS REQUIRED TO ADHERE TO ALL OF THE ABOVE-MENTIONED DOCUMENTS UNLESS OTHERWISE NOTED AND APPROVED BY THE ENGINEER.
2. CONTRACTOR SHALL COORDINATE LOCATION OF NEW 'DRY UTILITIES' WITH THE APPROPRIATE UTILITY COMPANY, INCLUDING BUT NOT LIMITED TO: TELEPHONE & INTERNET SERVICE, GAS SERVICE, CABLE, AND POWER.
3. EXISTING UTILITIES HAVE BEEN SHOWN ON THE PLANS BASED ON ON-SITE SURVEY. PRIOR TO COMMENCING ANY WORK, IT SHALL BE THE CONTRACTOR'S RESPONSIBILITY TO HAVE EACH UTILITY COMPANY LOCATE, IN THE FIELD, THEIR MAIN AND SERVICE LINES. THE CONTRACTOR SHALL NOTIFY BLUE STAKES AT 1-800-662-4111 48 HOURS IN ADVANCE OF PERFORMING ANY EXCAVATION WORK. THE CONTRACTOR SHALL RECORD THE BLUE STAKES ORDER NUMBER AND FURNISH ORDER NUMBER TO OWNER AND ENGINEER PRIOR TO ANY EXCAVATION. IT WILL BE THE CONTRACTOR'S SOLE RESPONSIBILITY TO DIRECTLY CONTACT ANY OTHER UTILITY COMPANIES THAT ARE NOT MEMBERS OF BLUE STAKES. IT SHALL BE THE CONTRACTOR'S SOLE RESPONSIBILITY TO PROTECT ALL EXISTING UTILITIES SO THAT NO DAMAGE RESULTS TO THEM DURING THE PERFORMANCE OF THIS CONTRACT. ANY REPAIRS NECESSARY TO DAMAGED UTILITIES SHALL BE PAID FOR BY THE CONTRACTOR. THE CONTRACTOR SHALL BE REQUIRED TO COOPERATE WITH OTHER CONTRACTORS AND UTILITY COMPANIES INSTALLING NEW STRUCTURES, UTILITIES AND SERVICE TO THE PROJECT.
4. CARE SHOULD BE TAKEN IN ALL EXCAVATIONS DUE TO POSSIBLE EXISTENCE OF UNRECORDED UTILITY LINES. EXCAVATION REQUIRED WITHIN PROXIMITY OF EXISTING UTILITY LINES SHALL BE DONE BY HAND. CONTRACTOR SHALL REPAIR ANY DAMAGE TO EXISTING UTILITY LINES OR STRUCTURES INCURRED DURING CONSTRUCTION OPERATIONS AT CONTRACTOR'S EXPENSE.
5. TRENCH BACKFILL MATERIAL AND COMPACTION TESTS ARE TO BE TAKEN PER APWA STANDARD SPECIFICATIONS (2012 EDITION), SECTION 02320 - BACKFILLING TRENCHES, OR AS REQUIRED BY THE GEOTECHNICAL REPORT IF NATIVE MATERIALS ARE USED. NO NATIVE MATERIALS ARE ALLOWED IN THE PIPE ZONE. THE MAXIMUM LIFT FOR BACKFILLING EXCAVATIONS IS 8-INCHES.
6. THE CONTRACTOR IS SOLELY RESPONSIBLE FOR CONFORMING TO LOCAL AND FEDERAL CODES GOVERNING SHORING AND BRACING OF EXCAVATIONS AND TRENCHES AND FOR THE PROTECTION OF WORKERS.
7. THE CONTRACTOR IS REQUIRED TO KEEP ALL CONSTRUCTION ACTIVITIES WITHIN THE APPROVED PROJECT LIMITS. THIS INCLUDES, BUT IS NOT LIMITED TO VEHICLE AND EQUIPMENT STAGING, MATERIAL STORAGE AND LIMITS OF TRENCH EXCAVATION. IT IS THE CONTRACTOR'S RESPONSIBILITY TO OBTAIN PERMISSION AND/OR EASEMENTS FROM THE APPROPRIATE GOVERNING ENTITY AND/OR INDIVIDUAL PROPERTY OWNER(S) FOR WORK OR STAGING OUTSIDE OF THE PROJECT LIMITS.
8. THE CONTRACTOR IS RESPONSIBLE FOR REPAIRING ANY DAMAGE, CAUSED BY ANY CONDITION INCLUDING SETTLEMENT, TO EXISTING UTILITIES FROM WORK PERFORMED AT OR NEAR EXISTING UTILITIES. THE CONTRACTOR SHALL TAKE ALL MEASURES NECESSARY TO PROTECT ALL EXISTING PUBLIC AND PRIVATE ROADWAY AND UTILITY FACILITIES. DAMAGE TO EXISTING FACILITIES CAUSED BY THE CONTRACTOR MUST BE REPAIRED BY THE CONTRACTOR AT HIS/HER EXPENSE TO THE SATISFACTION OF THE OWNER OF SAID FACILITIES.
9. ALL WATER LINE AND SEWER LINE INSTALLATION AND TESTING TO BE IN ACCORDANCE WITH LOCAL GOVERNING AGENCY'S STANDARDS AND SPECIFICATIONS.
10. ALL MANHOLES, HYDRANTS, VALVES, CLEANOUT BOXES, CATCH BASINS, METERS, ETC. MUST BE RAISED OR LOWERED TO FINAL GRADE PER APWA (2012 EDITION) STANDARDS AND INSPECTOR REQUIREMENTS. CONCRETE COLLARS MUST BE CONSTRUCTED ON ALL MANHOLES, CLEANOUT BOXES, CATCH BASINS, AND VALVES PER APWA STANDARDS. ALL MANHOLE, CATCH BASIN, OR CLEANOUT BOX CONNECTIONS MUST BE MADE WITH THE PIPE CUT FLUSH WITH THE INSIDE OF THE BOX AND GROUTED OR SEALED.
11. CONTRACTOR SHALL NOT ALLOW ANY GROUNDWATER OR DEBRIS TO ENTER THE NEW OR EXISTING PIPE DURING CONSTRUCTION.
12. SILT AND DEBRIS ARE TO BE CLEANED OUT OF ALL STORM DRAIN BOXES. CATCH BASINS ARE TO BE MAINTAINED IN A CLEANED CONDITION AS NEEDED UNTIL AFTER THE FINAL BOND RELEASE INSPECTION.
13. CONTRACTOR SHALL CLEAN ASPHALT, TAR OR OTHER ADHESIVES OFF OF ALL MANHOLE LIDS AND INLET GRATES TO ALLOW ACCESS.
14. EACH TRENCH SHALL BE EXCAVATED SO THAT THE PIPE CAN BE LAID TO THE ALIGNMENT AND GRADE AS REQUIRED. THE TRENCH WALL SHALL BE SO BRACED THAT THE WORKMEN MAY WORK SAFELY AND EFFICIENTLY. ALL TRENCHES SHALL BE DRAINED SO THE PIPE LAYING MAY TAKE PLACE IN DEWATERED CONDITIONS.
15. CONTRACTOR SHALL PROVIDE AND MAINTAIN AT ALL TIMES AMPLE MEANS AND DEVICES WITH WHICH TO REMOVE PROMPTLY AND TO PROPERLY DISPOSE OF ALL WATER ENTERING THE TRENCH EXCAVATION.
16. ALL SEWER LINES AND SEWER SERVICES SHALL HAVE A MINIMUM SEPARATION OF 10 FEET, CENTER TO CENTER, FROM THE WATER LINES. IF A 10 FOOT SEPARATION CAN NOT BE MAINTAINED, THE SEWER LINE AND WATER LINE SHALL BE LAID IN SEPARATE TRENCHES AND THERE SHALL BE A MINIMUM 18' VERTICAL SEPARATION BETWEEN THE PIPES.
17. CONTRACTOR SHALL INSTALL THRUST BLOCKING AT ALL WATERLINE ANGLE POINTS AND TEES.
18. ALL UNDERGROUND UTILITIES SHALL BE IN PLACE PRIOR TO INSTALLATION OF CURB, GUTTER, SIDEWALK AND STREET PAVING.
19. CONTRACTOR SHALL INSTALL MAGNETIC LOCATING TAPE CONTINUOUSLY OVER ALL NONMETALLIC PIPE.

TRAFFIC CONTROL AND SAFETY NOTES

1. TRAFFIC CONTROL AND STRIPING TO CONFORM TO THE CURRENT MANUAL OF UNIFORM TRAFFIC CONTROL DEVICES (M.U.T.C.D.).
2. BARRICADING AND DETOURING SHALL BE IN CONFORMANCE WITH THE REQUIREMENTS OF THE CURRENT M.U.T.C.D.
3. NO STREET SHALL BE CLOSED TO TRAFFIC WITHOUT WRITTEN PERMISSION FROM THE APPROPRIATE AGENCY, EXCEPT WHEN DIRECTED BY LAW ENFORCEMENT OR FIRE OFFICIALS.
4. THE CONTRACTOR SHALL MAKE EVERY EFFORT TO PROVIDE FOR SMOOTH TRAFFIC FLOW AND SAFETY. ACCESS SHALL BE MAINTAINED FOR ALL PROPERTIES ADJACENT TO THE WORK.
5. DETOURING OPERATIONS FOR A PERIOD OF SIX CONSECUTIVE CALENDAR DAYS, OR MORE, REQUIRE THE INSTALLATION OF TEMPORARY STREET STRIPING AND REMOVAL OF INTERFERING STRIPING BY SANDBLASTING. THE DETOURING STRIPING PLAN OR CONSTRUCTION TRAFFIC CONTROL PLAN MUST BE SUBMITTED TO THE CITY TRAFFIC ENGINEER FOR REVIEW AND APPROVAL.
6. ALL TRAFFIC CONTROL DEVICES SHALL BE RESTORED TO THEIR ORIGINAL CONDITION AT THE END OF THE WORK TO THE SATISFACTION OF THE CITY TRAFFIC ENGINEER.
7. TRAFFIC CONTROL DEVICES (TCDs) SHALL REMAIN VISIBLE AND OPERATIONAL AT ALL TIMES.
8. ALL PERMANENT TRAFFIC CONTROL DEVICES CALLED FOR HEREON SHALL BE IN PLACE AND IN FINAL POSITION PRIOR TO ALLOWING ANY PUBLIC TRAFFIC ONTO THE PORTIONS OF THE ROAD(S) BEING IMPROVED HEREUNDER, REGARDLESS OF THE STATUS OF COMPLETION OF PAVING OR OTHER OFF-SITE IMPROVEMENTS CALLED FOR BY THESE PLANS.
9. THE CONTRACTOR SHALL PROVIDE BARRICADES, SIGNS, FLASHERS, OTHER EQUIPMENT AND FLAG PERSONS NECESSARY TO INSURE THE SAFETY OF WORKERS AND VISITORS.
10. THE CONTRACTOR SHALL BE RESPONSIBLE FOR NOTIFYING UTAH TRANSIT AUTHORITY (UTA) IF THE CONSTRUCTION INTERRUPTS OR RELOCATES A BUS STOP OR HAS AN ADVERSE EFFECT ON BUS SERVICE ON THAT STREET TO ARRANGE FOR TEMPORARY RELOCATION OF STOP.

DEMOLITION NOTES

1. EXISTING UTILITY INFORMATION SHOWN IS FOR INFORMATIONAL PURPOSES ONLY. IT IS DERIVED FROM ON-SITE SURVEY AND MAY NOT BE LOCATED CORRECTLY AND IS NOT ALL INCLUSIVE. CONTRACTOR SHALL FIELD LOCATE ALL UTILITIES WITHIN THE PROJECT LIMITS BEFORE BEGINNING DEMOLITION/CONSTRUCTION.
2. THERE MAY BE BURIED UTILITIES WITHIN THE LIMITS OF DISTURBANCE THAT ARE NOT SHOWN ON THE PLANS DUE TO LACK OF MAPPING OR RECORD INFORMATION. CONTRACTOR SHALL NOTIFY THE ENGINEER WHEN UNEXPECTED UTILITIES ARE DISCOVERED.
3. THE CONTRACTOR SHALL BE FULLY RESPONSIBLE FOR LOCATING AND PROTECTING FROM DAMAGE ALL EXISTING UTILITIES AND IMPROVEMENTS WHETHER OR NOT SHOWN ON THESE PLANS. THE FACILITIES AND IMPROVEMENTS ARE BELIEVED TO BE CORRECTLY SHOWN BUT THE CONTRACTOR IS REQUIRED TO SATISFY HIMSELF AS TO THE COMPLETENESS AND ACCURACY OF THE LOCATIONS. ANY CONTRACTOR PERFORMING WORK ON THIS PROJECT SHALL FAMILIARIZE HIMSELF WITH THE SITE AND SHALL BE HELD SOLELY RESPONSIBLE FOR ANY DAMAGE TO EXISTING FACILITIES RESULTING DIRECTLY, OR INDIRECTLY, FROM HIS OPERATIONS, WHETHER OR NOT SAID FACILITIES ARE SHOWN ON THESE PLANS.

GRADING AND DRAINAGE NOTES

1. SITE GRADING SHALL BE PERFORMED IN ACCORDANCE WITH THESE PLANS AND SPECIFICATIONS AND THE RECOMMENDATIONS SET FORTH IN THE GEOTECHNICAL REPORT AND ALL RELATED ADDENDUMS.
2. THE CONTRACTOR SHALL STRIP AND CLEAR THE TOPSOIL, MAJOR ROOTS AND ORGANIC MATERIAL FROM ALL PROPOSED BUILDING AND PAVEMENT AREAS PRIOR TO SITE GRADING. (THE TOPSOIL MAY BE STOCKPILED FOR LATER USE IN LANDSCAPED AREAS.)
3. THE CONTRACTOR SHALL REMOVE ALL ORGANIC MATERIAL AND OTHER DELETERIOUS MATERIALS PRIOR TO PLACING GRADING FILL OR BASE COURSE. THE AREA SHOULD BE PROOF-ROLLED TO IDENTIFY ANY SOFT AREAS. WHERE SOFT AREAS ARE ENCOUNTERED, THE CONTRACTOR SHALL REMOVE THE SOIL AND REPLACE WITH COMPACTED FILL.
4. ALL DEBRIS PILES AND BERMS SHOULD BE REMOVED AND HAULED AWAY FROM SITE OR USED AS GENERAL FILL IN LANDSCAPED AREAS.
5. THE CONTRACTOR SHALL CONSTRUCT THE BUILDING PAD TO THESE DESIGN PLANS AS PART OF THE SITE GRADING CONTRACT, AND STRICTLY ADHERE TO THE SITE PREPARATION AND GRADING REQUIREMENTS OUTLINED IN THE GEOTECHNICAL REPORT.
6. THE CONTRACTOR SHALL GRADE THE PROJECT SITE TO PROVIDE A SMOOTH TRANSITION BETWEEN NEW AND EXISTING ASPHALT, CURB AND GUTTER, AND ADJOINING SITE IMPROVEMENTS.
7. THE CONTRACTOR SHALL BE RESPONSIBLE FOR DAMAGE AND DEBRIS ON ADJACENT STREETS WHEN EQUIPMENT IS TRAVELING THOSE STREETS.
8. THE CONTRACTOR SHALL BE FAMILIAR WITH ALL CONDITIONS AND RECOMMENDATIONS OUTLINED IN THE GEOTECHNICAL REPORT AND TAKE ALL NECESSARY PRECAUTIONS AND RECOMMENDED PROCEDURES TO ASSURE SOUND GRADING PRACTICES.
9. THE CONTRACTOR SHALL TAKE APPROPRIATE GRADING MEASURES TO DIRECT STORM SURFACE RUNOFF TOWARDS CATCH BASINS.
10. THE LOCATIONS OF UNDERGROUND FACILITIES SHOWN ON THESE PLANS ARE BASED ON ON-SITE SURVEY. IT SHALL BE THE CONTRACTORS' FULL RESPONSIBILITY TO CONTACT THE VARIOUS UTILITY COMPANIES TO LOCATE THEIR FACILITIES PRIOR TO PROCEEDING WITH CONSTRUCTION. NO ADDITIONAL COMPENSATION SHALL BE PAID TO THE CONTRACTOR FOR DAMAGE AND REPAIR TO THESE FACILITIES CAUSED BY HIS WORK FORCE.
11. IT SHALL BE THE RESPONSIBILITY OF THE CONTRACTOR TO PERFORM ALL NECESSARY CUTS AND FILLS WITHIN THE LIMITS OF THIS PROJECT AND THE RELATED OFF-SITE WORK, SO AS TO GENERATE THE DESIRED SUBGRADE, FINISH GRADES, AND SLOPES SHOWN.
12. THE CONTRACTOR IS WARNED THAT AN EARTHWORK BALANCE WAS NOT NECESSARILY THE INTENT OF THIS PROJECT. ANY ADDITIONAL MATERIAL REQUIRED OR LEFTOVER MATERIAL FOLLOWING EARTHWORK OPERATIONS BECOMES THE RESPONSIBILITY OF THE CONTRACTOR.
13. THE GRADING CONTRACTOR IS RESPONSIBLE TO COORDINATE WITH THE OWNER TO PROVIDE FOR THE REQUIREMENTS OF THE PROJECT STORM WATER POLLUTION PREVENTION PLAN (SWPPP) AND ASSOCIATED PERMIT. ALL CONTRACTOR ACTIVITIES 1 ACRE OR MORE IN SIZE ARE REQUIRED TO PROVIDE A STORM WATER POLLUTION PREVENTION PLAN.
14. ALL CUT AND FILL SLOPES SHALL BE PROTECTED UNTIL EFFECTIVE EROSION CONTROL HAS BEEN ESTABLISHED.
15. THE USE OF POTABLE WATER WITHOUT A SPECIAL PERMIT FOR BUILDING OR CONSTRUCTION PURPOSES INCLUDING CONSOLIDATION OF BACKFILL OR DUST CONTROL IS PROHIBITED. THE CONTRACTOR SHALL OBTAIN ALL NECESSARY PERMITS FOR CONSTRUCTION WATER FROM GOVERNING AGENCY.
16. THE CONTRACTOR SHALL MAINTAIN THE STREETS, SIDEWALKS, AND ALL OTHER PUBLIC RIGHT-OF-WAYS IN A CLEAN, SAFE AND USABLE CONDITION. ALL SPILLS OF SOIL, ROCK OR CONSTRUCTION DEBRIS SHALL BE PROMPTLY REMOVED FROM THE PUBLICLY-OWNED PROPERTY DURING CONSTRUCTION AND UPON COMPLETION OF THE PROJECT. ALL ADJACENT PROPERTY, PRIVATE OR PUBLIC, SHALL BE MAINTAINED IN A CLEAN, SAFE, AND USABLE CONDITION.

ABBREVIATIONS

APWA	AMERICAN PUBLIC WORKS ASSOCIATION
AR	ACCESSIBLE ROUTE
ASTM	AMERICAN SOCIETY FOR TESTING AND MATERIALS
AWWA	AMERICAN WATER WORKS ASSOCIATION
BOS	BOTTOM OF STEP
BVC	BEGIN VERTICAL CURVE
C	CURVE
CB	CATCH BASIN
CF	CURB FACE OR CUBIC FEET
CL	CENTER LINE
CO	CLEAN OUT
COMM	COMMUNICATION
CONC	CONCRETE
CONT	CONTINUOUS
DIA	DIAMETER
DIP	DUCTILE IRON PIPE
ELEC	ELECTRICAL
ELEV	ELEVATION
EOA	EDGE OF ASPHALT
EVC	END OF VERTICAL CURVE
EW	EACH WAY
EXIST	EXISTING
FF	FINISH FLOOR
FG	FINISH GRADE
FH	FIRE HYDRANT
FL	FLOW LINE OR FLANGE
GB	GRADE BREAK
GF	GARAGE FLOOR
GV	GATE VALVE
HC	HANDICAP
HP	HIGH POINT
IRR	IRRIGATION
K	RATE OF VERTICAL CURVATURE
LD	LAND DRAIN
LF	LINEAR FEET
LP	LOW POINT
MH	MANHOLE
MJ	MECHANICAL JOINT
NG	NATURAL GROUND
NIC	NOT IN CONTRACT
NO	NUMBER
OC	ON CENTER
OCEW	ON CENTER EACH WAY
OHP	OVERHEAD POWER
PC	POINT OF CURVATURE OR PRESSURE CLASS
PCC	POINT OF COMPOUND CURVATURE
PI	POINT OF INTERSECTION
PIV	POST INDICATOR VALVE
PL	PROPERTY LINE
PRC	POINT OF REVERSE CURVATURE
PRO	PROPOSED
PT	POINT OF TANGENCY
PVC	POINT OF VERTICAL CURVATURE
PVI	POINT OF VERTICAL INTERSECTION
PVT	POINT OF VERTICAL TANGENCY
R	RADIUS
RD	ROOF DRAIN
ROW	RIGHT OF WAY
S	SLOPE
SAN SWR	SANITARY SEWER
SD	STORM DRAIN
SEC	SECONDARY
SS	SANITARY SEWER
STA	STATION
SW	SIDEWALK
SWL	SECONDARY WATER LINE
TBC	TOP BACK OF CURB
TOG	TOP OF GRATE
TOA	TOP OF ASPHALT
TOC	TOP OF CONCRETE
TOF	TOP OF FOUNDATION
TOW	TOP OF WALL
TOS	TOP OF STEP
TYP	TYPICAL
VC	VERTICAL CURVE
WIV	WALL INDICATOR VALVE
WL	WATER LINE

NOTE: MAY CONTAIN ABBREVIATIONS THAT ARE NOT USED IN THIS PLAN SET.

LEGEND

SECTION CORNER
EXISTING MONUMENT
PROPOSED MONUMENT
EXISTING REBAR AND CAP
SET ENSIGN REBAR AND CAP
EXISTING WATER METER
PROPOSED WATER METER
EXISTING WATER MANHOLE
PROPOSED WATER MANHOLE
EXISTING WATER BOX
EXISTING WATER VALVE
PROPOSED WATER VALVE
EXISTING FIRE HYDRANT
PROPOSED FIRE HYDRANT
PROPOSED FIRE DEPARTMENT CONNECTION
EXISTING SECONDARY WATER VALVE
PROPOSED SECONDARY WATER VALVE
EXISTING IRRIGATION BOX
EXISTING IRRIGATION VALVE
PROPOSED IRRIGATION VALVE
EXISTING SANITARY SEWER MANHOLE
PROPOSED SANITARY SEWER MANHOLE
EXISTING SANITARY CLEAN OUT
EXISTING STORM DRAIN CLEAN OUT BOX
PROPOSED STORM DRAIN CLEAN OUT BOX
EXISTING STORM DRAIN INLET BOX
EXISTING STORM DRAIN CATCH BASIN
PROPOSED STORM DRAIN CATCH BASIN
EXISTING STORM DRAIN COMBO BOX
PROPOSED STORM DRAIN COMBO BOX
EXISTING STORM DRAIN CLEAN OUT
EXISTING STORM DRAIN CULVERT
PROPOSED STORM DRAIN CULVERT
TEMPORARY SAG INLET PROTECTION
TEMPORARY IN-LINE INLET PROTECTION
ROOF DRAIN
EXISTING ELECTRICAL MANHOLE
EXISTING ELECTRICAL BOX
EXISTING TRANSFORMER
EXISTING UTILITY POLE
EXISTING LIGHT
PROPOSED LIGHT
EXISTING GAS METER
EXISTING GAS MANHOLE
EXISTING GAS VALVE
EXISTING TELEPHONE MANHOLE
EXISTING TELEPHONE BOX
EXISTING TRAFFIC SIGNAL BOX
EXISTING CABLE BOX
EXISTING BOLLARD
PROPOSED BOLLARD
EXISTING SIGN
PROPOSED SIGN
EXISTING SPOT ELEVATION
PROPOSED SPOT ELEVATION
EXISTING FLOW DIRECTION
EXISTING TREE
DENSE VEGETATION

EXISTING EDGE OF ASPHALT
PROPOSED EDGE OF ASPHALT
EXISTING STRIPING
PROPOSED STRIPING
EXISTING FENCE
PROPOSED FENCE
EXISTING FLOW LINE
PROPOSED FLOW LINE
GRADE BREAK
EXISTING STORM DRAIN LINE
PROPOSED STORM DRAIN LINE
ROOF DRAIN LINE
CATCHMENTS
HIGHWATER LINE
EXISTING SANITARY SEWER
PROPOSED SANITARY SEWER LINE
PROPOSED SAN. SWR. SERVICE LINE
EXISTING LAND DRAIN LINE
PROPOSED LAND DRAIN LINE
PROPOSED LAND DRAIN SERVICE LINE
EXISTING CULINARY WATER LINE
PROPOSED CULINARY WATER LINE
PROPOSED CULINARY WATER SERVICE LINE
EXISTING SECONDARY WATER LINE
PROPOSED SECONDARY WATER LINE
PROPOSED SEC. WATER SERVICE LINE
EXISTING IRRIGATION LINE
PROPOSED IRRIGATION LINE
EXISTING OVERHEAD POWER LINE
EXISTING ELECTRICAL LINE
EXISTING GAS LINE
EXISTING TELEPHONE LINE
ACCESSIBLE ROUTE
SAW CUT LINE
STRAW WATTLE
TEMPORARY BERM
TEMPORARY SILT FENCE
LIMITS OF DISTURBANCE
EXISTING WALL
PROPOSED WALL
EXISTING CON

CALL BLUESTAKES @ 811 AT LEAST 48 HOURS PRIOR TO THE COMMENCEMENT OF ANY CONSTRUCTION.

Know what's below. Call before you dig.

BENCHMARK

NORTH QUARTER CORNER SECTION 16 T14S, R10E SLB&M (FOUND)

ELEVATION = 5698.15

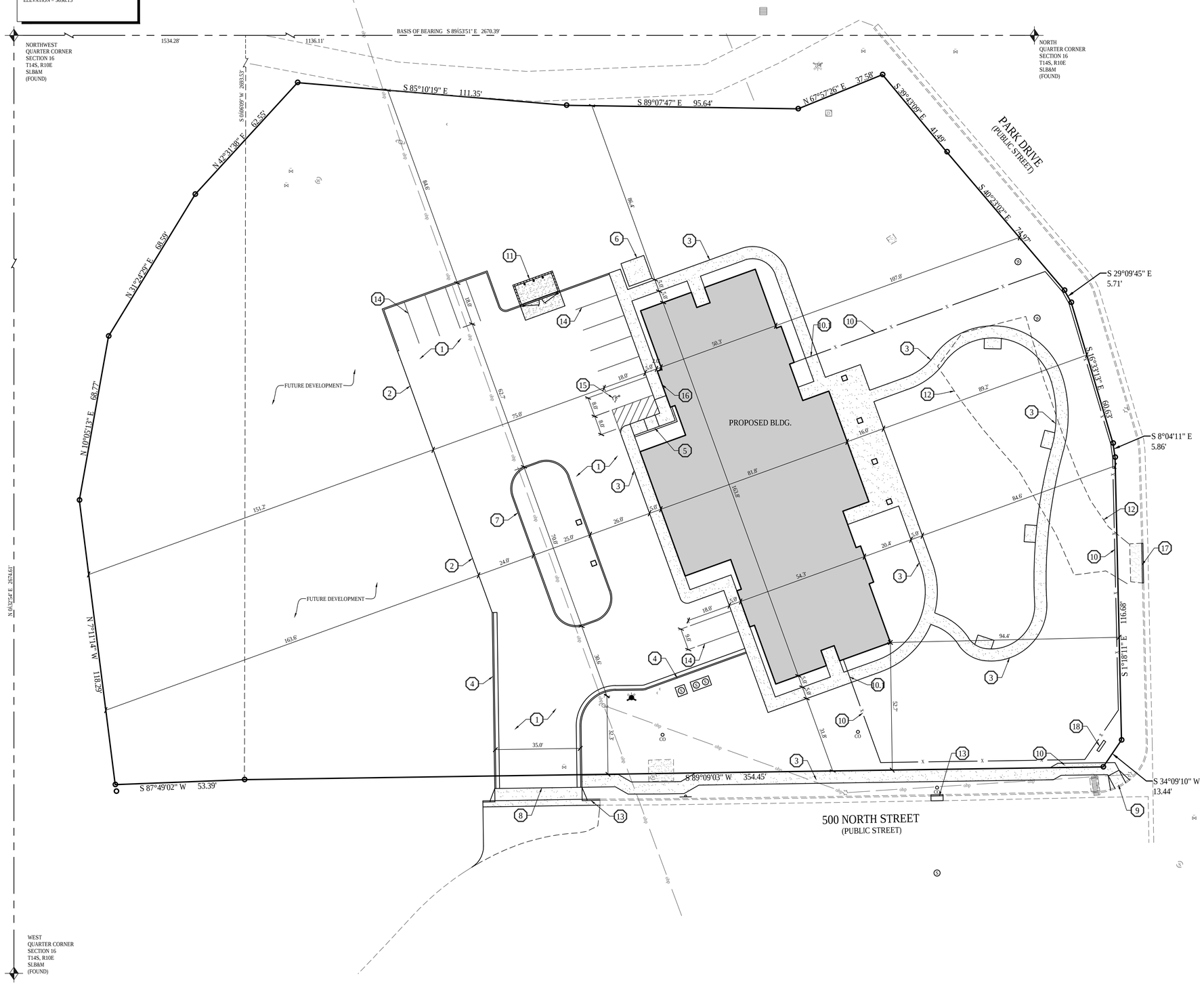

SITE SUMMARY TABLE		
DESCRIPTION	AREA (SF)	PERCENTAGE
PAVEMENT	18,991	17%
ROOF	9,942	9%
LANDSCAPING	79,927	74%
TOTAL SITE	108,860 2.50 ACRES	100%

PARKING DATA TABLE	
STANDARD STALLS	14
HANDICAP-ACCESSIBLE STALLS	1
TOTAL STALLS	15

GENERAL NOTES

1. ALL WORK TO COMPLY WITH THE GOVERNING AGENCY'S STANDARDS AND SPECIFICATIONS.
2. ALL IMPROVEMENTS MUST COMPLY WITH ADA STANDARDS AND RECOMMENDATIONS.
3. SEE LANDSCAPE/ARCHITECTURAL PLANS FOR CONCRETE MATERIAL, COLOR, FINISH, AND SCORE PATTERNS THROUGHOUT SITE.
4. ALL PAVEMENT MARKINGS SHALL CONFORM TO THE LATEST EDITION OF THE M.U.T.C.D. (MANUAL ON UNIFORM TRAFFIC CONTROL DEVICES).
5. ALL SURFACE IMPROVEMENTS DISTURBED BY CONSTRUCTION SHALL BE RESTORED OR REPLACED, INCLUDING TREES AND DECORATIVE SHRUBS, SOD, FENCES, WALLS AND STRUCTURES, WHETHER OR NOT THEY ARE SPECIFICALLY SHOWN ON THE CONTRACT DOCUMENTS.
6. NOTIFY ENGINEER OF ANY DISCREPANCIES IN DESIGN OR STAKING BEFORE PLACING CONCRETE OR ASPHALT.
7. THE CONTRACTOR IS TO PROTECT AND PRESERVE ALL EXISTING IMPROVEMENTS, UTILITIES, AND SIGNS, ETC. UNLESS OTHERWISE NOTED ON THESE PLANS.

SCOPE OF WORK:

PROVIDE, INSTALL AND/OR CONSTRUCT THE FOLLOWING PER THE SPECIFICATIONS GIVEN OR REFERENCED, THE DETAILS NOTED, AND/OR AS SHOWN ON THE CONSTRUCTION DRAWINGS:

1. ASPHALT PAVEMENT: 3¿ THICK ASPHALTIC CONCRETE WITH 8¿ UNTREATED BASE COURSE PER GEOTECHNICAL REPORT AND DETAIL 6/C-500.
2. ROLL ASPHALT TO PROVIDE 6" THICKENED EDGE. EXTEND BASE COURSE 2' BEYOND EDGE OF ASPHALT.
3. 4¿ THICK CONCRETE SIDEWALK PER APWA STANDARD PLAN NO. 231 AND SPECIFICATIONS.
4. 24¿ COLLECTION CURB AND GUTTER PER DETAIL 11/C-500.
5. ON-SITE HANDICAP ACCESS RAMP PER DETAIL 12/C-500.
6. CONCRETE PAD FOR SHED.
7. 6¿ TYPE iPj CURB WALL PER APWA STANDARD PLAN NO. 209 AND SPECIFICATIONS.
8. OPEN DRIVEWAY APPROACH PER APWA STANDARD PLAN NO. 225 AND SPECIFICATIONS.
9. HANDICAP ACCESS RAMP PER APWA STANDARD PLAN NO. 235 WITH DETECTABLE WARNING SURFACE PER APWA STANDARD PLAN NO. 238 AND SPECIFICATIONS.
10. FENCE. 6' WROUGHT IRON FENCE - BLACK
10. PROVIDE 3' ACCESS GATE. PROVIDE CARD READER FOR ACCESS.
11. TRASH ENCLOSURE WITH 6" THICK CONCRETE APRON WITH #4 REBAR @ 24" O.C. E.W. ON 6¿ GRAVEL BASE. PER DETAIL 2,3,4,5/C-500
12. REMOVE AND PROPERLY DISPOSE OF EXISTING ASPHALT PAVEMENT.
13. 30¿ TYPE iAj CURB AND GUTTER PER APWA STANDARD PLAN NO. 205 AND SPECIFICATIONS.
14. 4" WIDE SOLID WHITE PAVEMENT MARKING PER M.U.T.C.D. STANDARD PLANS.
15. PAINTED ADA SYMBOL AND ASSOCIATED HATCHING PER M.U.T.C.D. STANDARD PLANS.
16. "HANDICAP PARKING" SIGN PER M.U.T.C.D. STANDARD PLANS.
17. REMOVE EXISTING DRIVE APPROACH AND REPLACE WITH 30¿ TYPE iAj CURB AND GUTTER PER APWA STANDARD PLAN NO. 205 AND SPECIFICATIONS.
18. MONUMENT SIGN.
19. CONCRETE PAD FOR ELECTRICAL EQUIPMENT. SEE ELECTRICAL PLANS FOR ADDITIONAL INFORMATION.

NORTH

HORIZONTAL GRAPHIC SCALE

20 0 10 20 40

(IN FEET)
HORZ: 1 inch = 20 ft.

ENSIGN
THE STANDARD IN ENGINEERING

SALT LAKE CITY
45 W. 10000 S., Suite 500
Sandy, UT 84070
Phone: 801.255.0529

LAYTON
Phone: 801.547.1100

TOOELE
Phone: 435.843.3590

CEDAR CITY
Phone: 435.865.1453

RICHFIELD
Phone: 435.896.2983

WWW.ENSIGNENG.COM

FOR:
TENDER CARE HOSPICE
503 WEST 2600 SOUTH, SUITE 200
BOUNTIFUL, UTAH 84010
CONTACT:
RICHARD NUFFER
PHONE: 801-294-0560

PRICE MC ASSISTED LIVING CENTER

PARK DRIVE & 500 NORTH STREET
PRICE, UTAH

LICENSED PROFESSIONAL ENGINEER
7690015
CHAD R. THOMAS
3-4-16
STATE OF UTAH

FOR PERMIT

SITE PLAN

PROJECT NUMBER	PRINT DATE
6803	4/28/16
DRAWN BY	CHECKED BY
PROJECT MANAGER	

C-100

CALL BLUESTAKES @ 811 AT LEAST 48 HOURS PRIOR TO THE COMMENCEMENT OF ANY CONSTRUCTION.

Know what's below. Call before you dig.

BENCHMARK

NORTH QUARTER CORNER SECTION 16 T14S, R10E SLB&M (FOUND)

ELEVATION = 5698.15

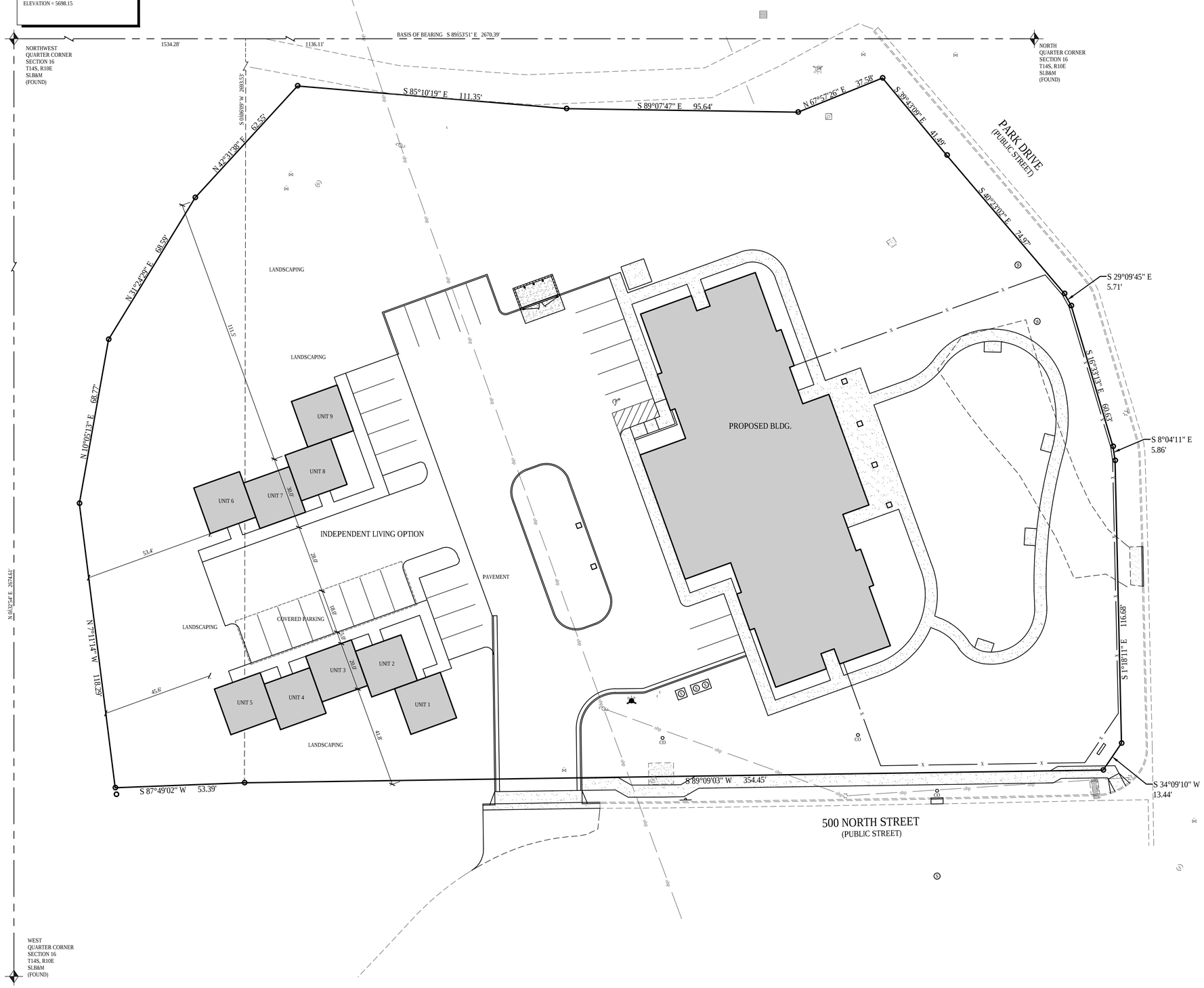

SITE SUMMARY TABLE		
DESCRIPTION	AREA (SF)	PERCENTAGE
PAVEMENT	18,991	17%
ROOF	9,942	9%
LANDSCAPING	79,927	74%
TOTAL SITE	108,860 2.50 ACRES	100%

PARKING DATA TABLE	
STANDARD STALLS	14
HANDICAP-ACCESSIBLE STALLS	1
TOTAL STALLS	15

GENERAL NOTES

1. ALL WORK TO COMPLY WITH THE GOVERNING AGENCY'S STANDARDS AND SPECIFICATIONS.
2. ALL IMPROVEMENTS MUST COMPLY WITH ADA STANDARDS AND RECOMMENDATIONS.
3. SEE LANDSCAPE/ARCHITECTURAL PLANS FOR CONCRETE MATERIAL, COLOR, FINISH, AND SCORE PATTERNS THROUGHOUT SITE.
4. ALL PAVEMENT MARKINGS SHALL CONFORM TO THE LATEST EDITION OF THE M.U.T.C.D. (MANUAL ON UNIFORM TRAFFIC CONTROL DEVICES).
5. ALL SURFACE IMPROVEMENTS DISTURBED BY CONSTRUCTION SHALL BE RESTORED OR REPLACED, INCLUDING TREES AND DECORATIVE SHRUBS, SOD, FENCES, WALLS AND STRUCTURES, WHETHER OR NOT THEY ARE SPECIFICALLY SHOWN ON THE CONTRACT DOCUMENTS.
6. NOTIFY ENGINEER OF ANY DISCREPANCIES IN DESIGN OR STAKING BEFORE PLACING CONCRETE OR ASPHALT.
7. THE CONTRACTOR IS TO PROTECT AND PRESERVE ALL EXISTING IMPROVEMENTS, UTILITIES, AND SIGNS, ETC. UNLESS OTHERWISE NOTED ON THESE PLANS.

HORIZONTAL GRAPHIC SCALE

20 0 10 20 40

(IN FEET)
HORZ: 1 inch = 20 ft.

ENSIGN
THE STANDARD IN ENGINEERING

SALT LAKE CITY
45 W. 10000 S., Suite 500
Sandy, UT 84070
Phone: 801.255.0529

LAYTON
Phone: 801.547.1100

TOOELE
Phone: 435.843.3590

CEDAR CITY
Phone: 435.865.1453

RICHFIELD
Phone: 435.896.2983

WWW.ENSIGNENG.COM

FOR:
TENDER CARE HOSPICE
503 WEST 2600 SOUTH, SUITE 200
BOUNTIFUL, UTAH 84010
CONTACT:
RICHARD NUFFER
PHONE: 801-294-0560

PRICE MC ASSISTED LIVING CENTER

PARK DRIVE & 500 NORTH STREET
PRICE, UTAH

LICENSED PROFESSIONAL ENGINEER
7690015
CHAD R. THOMAS
3-4-16
STATE OF UTAH

FOR PERMIT

SITE PLAN
OPTION 1

PROJECT NUMBER	PRINT DATE
6803	4/28/16
DRAWN BY	CHECKED BY
PROJECT MANAGER	

C-101

CALL BLUESTAKES @ 811 AT LEAST 48 HOURS PRIOR TO THE COMMENCEMENT OF ANY CONSTRUCTION.

Know what's below. Call before you dig.

BENCHMARK

NORTH QUARTER CORNER SECTION 16 T14S, R10E SLB&M (FOUND)

ELEVATION = 5698.15

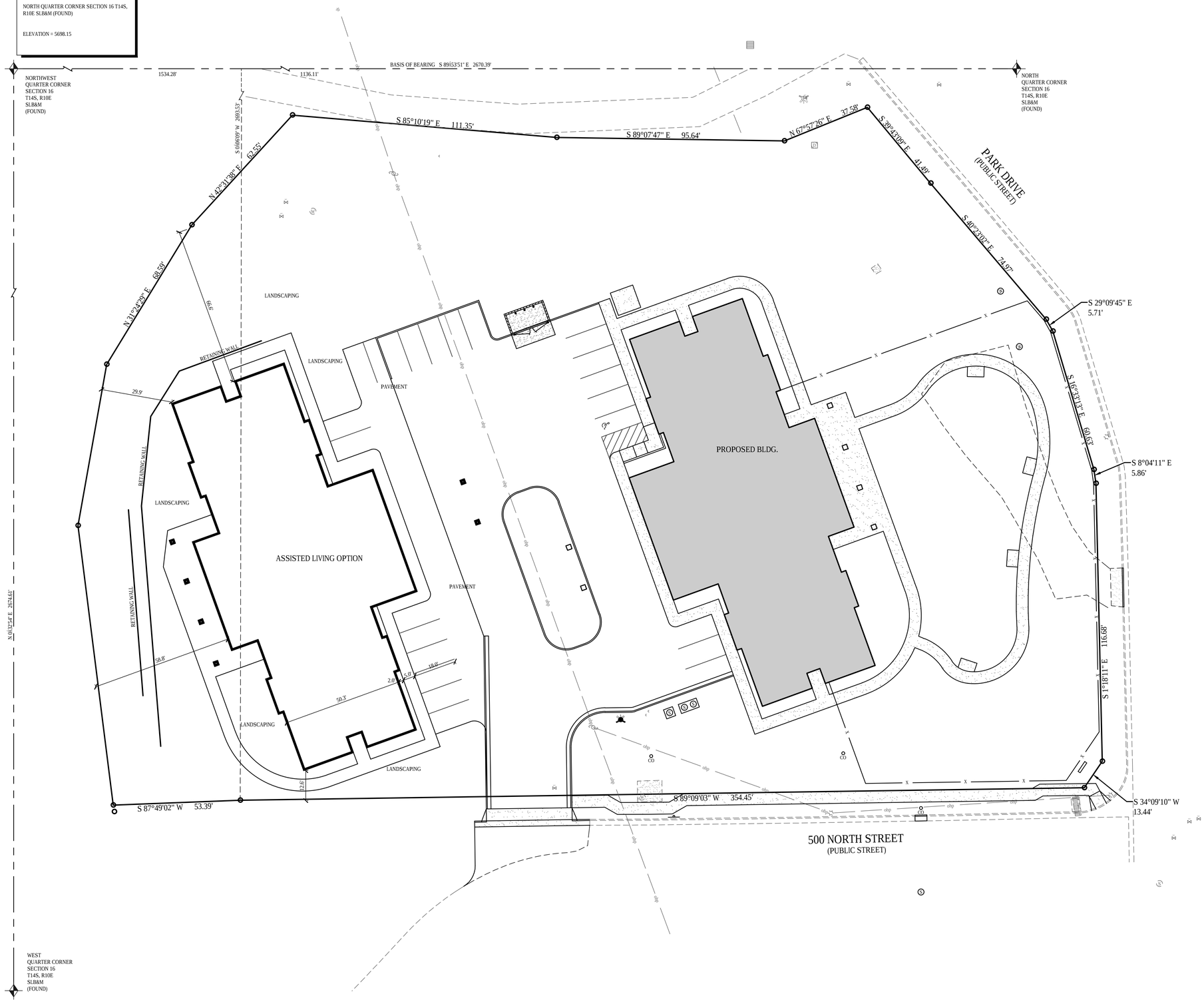

SITE SUMMARY TABLE

DESCRIPTION	AREA (SF)	PERCENTAGE
PAVEMENT	18,991	17%
ROOF	9,942	9%
LANDSCAPING	79,927	74%
TOTAL SITE	108,860 2.50 ACRES	100%

PARKING DATA TABLE

STANDARD STALLS	14
HANDICAP-ACCESSIBLE STALLS	1
TOTAL STALLS	15

GENERAL NOTES

1. ALL WORK TO COMPLY WITH THE GOVERNING AGENCY'S STANDARDS AND SPECIFICATIONS.
2. ALL IMPROVEMENTS MUST COMPLY WITH ADA STANDARDS AND RECOMMENDATIONS.
3. SEE LANDSCAPE/ARCHITECTURAL PLANS FOR CONCRETE MATERIAL, COLOR, FINISH, AND SCORE PATTERNS THROUGHOUT SITE.
4. ALL PAVEMENT MARKINGS SHALL CONFORM TO THE LATEST EDITION OF THE M.U.T.C.D. (MANUAL ON UNIFORM TRAFFIC CONTROL DEVICES).
5. ALL SURFACE IMPROVEMENTS DISTURBED BY CONSTRUCTION SHALL BE RESTORED OR REPLACED, INCLUDING TREES AND DECORATIVE SHRUBS, SOD, FENCES, WALLS AND STRUCTURES, WHETHER OR NOT THEY ARE SPECIFICALLY SHOWN ON THE CONTRACT DOCUMENTS.
6. NOTIFY ENGINEER OF ANY DISCREPANCIES IN DESIGN OR STAKING BEFORE PLACING CONCRETE OR ASPHALT.
7. THE CONTRACTOR IS TO PROTECT AND PRESERVE ALL EXISTING IMPROVEMENTS, UTILITIES, AND SIGNS, ETC. UNLESS OTHERWISE NOTED ON THESE PLANS.

NORTH

HORIZONTAL GRAPHIC SCALE

20 0 10 20 40

(IN FEET)
HORZ: 1 inch = 20 ft.

ENSIGN
THE STANDARD IN ENGINEERING

SALT LAKE CITY
45 W. 10000 S., Suite 500
Sandy, UT 84070
Phone: 801.255.0529

LAYTON
Phone: 801.547.1100

TOOELE
Phone: 435.843.3590

CEDAR CITY
Phone: 435.865.1453

RICHFIELD
Phone: 435.896.2983

WWW.ENSIGNENG.COM

FOR:
TENDER CARE HOSPICE
503 WEST 2600 SOUTH, SUITE 200
BOUNTIFUL, UTAH 84010
CONTACT:
RICHARD NUFFER
PHONE: 801-294-0560

PRICE MC ASSISTED LIVING CENTER

PARK DRIVE & 500 NORTH STREET
PRICE, UTAH

UTAH LICENSED PROFESSIONAL ENGINEER
7690015
CHAD R. THOMAS
3-4-16
STATE OF UTAH

FOR PERMIT

SITE PLAN
OPTION 2

PROJECT NUMBER	PRINT DATE
6803	4/28/16
DRAWN BY	CHECKED BY
PROJECT MANAGER	

C-102

CALL BLUESTAKES @ 811 AT LEAST 48 HOURS PRIOR TO THE COMMENCEMENT OF ANY CONSTRUCTION.

BENCHMARK

NORTH QUARTER CORNER SECTION 16 T14S, R10E SLB&M (FOUND)

ELEVATION = 5698.15

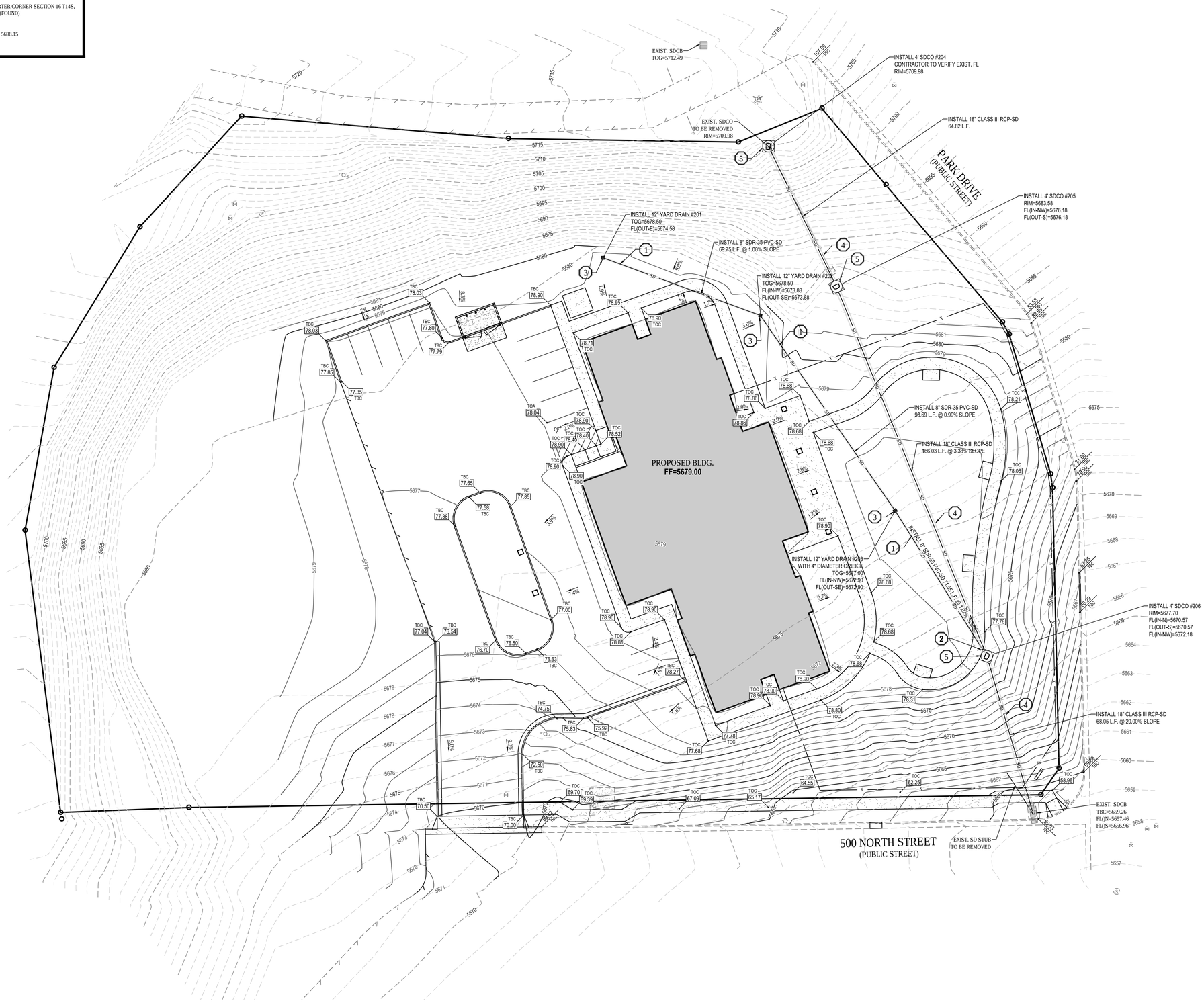

GENERAL NOTES

1. ALL WORK TO COMPLY WITH THE GOVERNING AGENCY'S STANDARDS AND SPECIFICATIONS.
2. ALL IMPROVEMENTS MUST COMPLY WITH ADA STANDARDS AND RECOMMENDATIONS.
3. ALL WORK SHALL COMPLY WITH THE RECOMMENDATIONS OF THE GEOTECHNICAL ENGINEER POSSIBLY INCLUDING, BUT NOT LIMITED TO, REMOVAL OF UNCONSOLIDATED FILL, ORGANICS, AND DEBRIS, PLACEMENT OF SUBSURFACE DRAIN LINES AND GEOTEXTILE, AND OVEREXCAVATION OF UNSUITABLE BEARING MATERIALS AND PLACEMENT OF ACCEPTABLE FILL MATERIAL.
4. THE CONTRACTOR SHALL BECOME FAMILIAR WITH THE EXISTING SOIL CONDITIONS.
5. ELEVATIONS HAVE BEEN TRUNCATED FOR CLARITY. XX.XX REPRESENTS AN ELEVATION OF 48XX.XX ON THESE PLANS.
6. LANDSCAPED AREAS REQUIRE SUBGRADE TO BE MAINTAINED AT A SPECIFIC ELEVATION BELOW FINISHED GRADE AND REQUIRE SUBGRADE TO BE PROPERLY PREPARED AND SCARIFIED. SEE LANDSCAPE PLANS FOR ADDITIONAL INFORMATION.
7. SLOPE ALL LANDSCAPED AREAS AWAY FROM BUILDING FOUNDATIONS TOWARD CURB AND GUTTER OR STORM DRAIN INLETS.
8. EXISTING UNDERGROUND UTILITIES AND IMPROVEMENTS ARE SHOWN IN THEIR APPROXIMATE LOCATIONS BASED UPON RECORD INFORMATION AVAILABLE AT THE TIME OF PREPARATION OF THESE PLANS. LOCATIONS MAY NOT HAVE BEEN VERIFIED IN THE FIELD AND NO GUARANTEE IS MADE AS TO THE ACCURACY OR COMPLETENESS OF THE INFORMATION SHOWN. IT SHALL BE THE RESPONSIBILITY OF THE CONTRACTOR TO DETERMINE THE EXISTENCE AND LOCATION OF THE UTILITIES SHOWN ON THESE PLANS OR INDICATED IN THE FIELD BY LOCATING SERVICES. ANY ADDITIONAL COSTS INCURRED AS A RESULT OF THE CONTRACTOR'S FAILURE TO VERIFY THE LOCATIONS OF EXISTING UTILITIES PRIOR TO THE BEGINNING OF CONSTRUCTION IN THEIR VICINITY SHALL BE BORNE BY THE CONTRACTOR AND ASSUMED INCLUDED IN THE CONTRACT. THE CONTRACTOR IS TO VERIFY ALL CONNECTION POINTS WITH THE EXISTING UTILITIES. THE CONTRACTOR IS RESPONSIBLE FOR ANY DAMAGE CAUSED TO THE EXISTING UTILITIES AND UTILITY STRUCTURES THAT ARE TO REMAIN. IF CONFLICTS WITH EXISTING UTILITIES OCCUR, THE CONTRACTOR SHALL NOTIFY THE ENGINEER PRIOR TO CONSTRUCTION TO DETERMINE IF ANY FIELD ADJUSTMENTS SHOULD BE MADE.
9. ALL STORM DRAIN INFRASTRUCTURE TO BE INSTALLED PER GOVERNING AGENCY OR APWA STANDARD PLANS AND SPECIFICATIONS.
10. ENSURE MINIMUM COVER OVER ALL STORM DRAIN PIPES PER MANUFACTURER'S RECOMMENDATIONS. NOTIFY ENGINEER IF MINIMUM COVER CANNOT BE ATTAINED.
11. ALL FACILITIES WITH DOWNSPOUTS/ROOF DRAINS SHALL BE CONNECTED TO THE STORM DRAIN SYSTEM. SEE MECHANICAL/PLUMBING PLANS FOR DOWNSPOUT/ROOF DRAIN LOCATIONS AND SIZES. ALL ROOF DRAINS TO HAVE MINIMUM 1% SLOPE.
12. THE CONTRACTOR SHALL ADJUST TO GRADE ALL EXISTING UTILITIES AS NEEDED PER LOCAL GOVERNING AGENCY'S STANDARDS AND SPECIFICATIONS.
13. NOTIFY ENGINEER OF ANY DISCREPANCIES IN DESIGN OR STAKING BEFORE PLACING CONCRETE, ASPHALT, OR STORM DRAIN STRUCTURES OR PIPES.
14. THE CONTRACTOR IS TO PROTECT AND PRESERVE ALL EXISTING IMPROVEMENTS, UTILITIES, AND SIGNS, ETC. UNLESS OTHERWISE NOTED ON THESE PLANS.

SCOPE OF WORK:

PROVIDE, INSTALL AND/OR CONSTRUCT THE FOLLOWING PER THE SPECIFICATIONS GIVEN OR REFERENCED, THE DETAILS NOTED, AND/OR AS SHOWN ON THE CONSTRUCTION DRAWINGS:

1. SDR-35 STORM DRAIN LINE OR APPROVED EQUAL. INSTALLATION AND TRENCHING PER APWA STANDARDS AND SPECIFICATIONS. LENGTH AND SLOPE PER PLAN.
2. ORIFICE PLATE PER DETAIL 14/C-500 INSTALLED ON NORTH SIDE OF STORM DRAIN BOX.
3. 12" PVC INLINE DRAIN WITH SLOTTED GRATE AND 6" OUTLET RISER, INCLUDING ALL FITTINGS PER DETAIL 15/C-500. INSTALL PER MANUFACTURER'S SPECIFICATIONS. EXTEND END OF 6" SPOOL 1' ABOVE PROPOSED TOP OF GRATE ELEVATION. ADJUST GRATE TO APPROPRIATE FINAL ELEVATION PER PLANS AND LANDSCAPE TREATMENT.
4. RCP CLIII STORM DRAIN LINE OR APPROVED EQUAL. INSTALLATION AND TRENCHING PER APWA STANDARDS AND SPECIFICATIONS. LENGTH AND SLOPE PER PLAN.
5. CLEANOUT BOX PER APWA STANDARD PLAN NO. 331 AND SPECIFICATIONS.

DRAINAGE CALCULATIONS

PRE-DEVELOPED RUNOFF
AREA = 2.50 ACRES
C = 0.45
I = 3.78 (100-YR 15 MIN TIME OF CONCENTRATION)
CIA = 4.22 CFS

EAST DETENTION
AREA = 1.00 ACRES
C = 0.54
RELEASE RATE = 1.0 CFS
VOLUME REQUIRED = 937 CUBIC FEET
VOLUME PROVIDED = 1,043 CUBIC FEET

WEST AND FUTURE PHASE RUNOFF
AREA = 1.50 ACRES
C = 0.50
I = 3.78 (100-YR 15 MIN TIME OF CONCENTRATION)
CIA = 2.84 CFS

COMBINED POST DEVELOPMENT RUNOFF = 3.84 CFS
LESS THAN PRE DEVELOPED FLOW OF 4.22 CFS

NORTH

HORIZONTAL GRAPHIC SCALE

20 0 10 20 40

(IN FEET)
HORZ: 1 inch = 20 ft.

ENSIGN
THE STANDARD IN ENGINEERING

SALT LAKE CITY
45 W. 10000 S., Suite 500
Sandy, UT 84070
Phone: 801.255.0529

LAYTON
Phone: 801.547.1100

TOOELE
Phone: 435.843.3590

CEDAR CITY
Phone: 435.865.1453

RICHFIELD
Phone: 435.896.2983

WWW.ENSIGNENG.COM

FOR:
TENDER CARE HOSPICE
503 WEST 2600 SOUTH, SUITE 200
BOUNTIFUL, UTAH 84010

CONTACT:
RICHARD NUFFER
PHONE: 801-294-0560

PRICE MC ASSISTED LIVING CENTER

PARK DRIVE & 500 NORTH STREET
PRICE, UTAH

LICENSED PROFESSIONAL ENGINEER
7690015
CHAD R. THOMAS
3-4-16
STATE OF UTAH

FOR PERMIT

GRADING AND DRAINAGE PLAN

PROJECT NUMBER	PRINT DATE
6803	3/4/16
DRAWN BY	CHECKED BY
PROJECT MANAGER	

C-200

CALL BLUESTAKES @ 811 AT LEAST 48 HOURS PRIOR TO THE COMMENCEMENT OF ANY CONSTRUCTION.

Know what's below. Call before you dig.

BENCHMARK

NORTH QUARTER CORNER SECTION 16 T14S, R10E SLB&M (FOUND)

ELEVATION = 5698.15

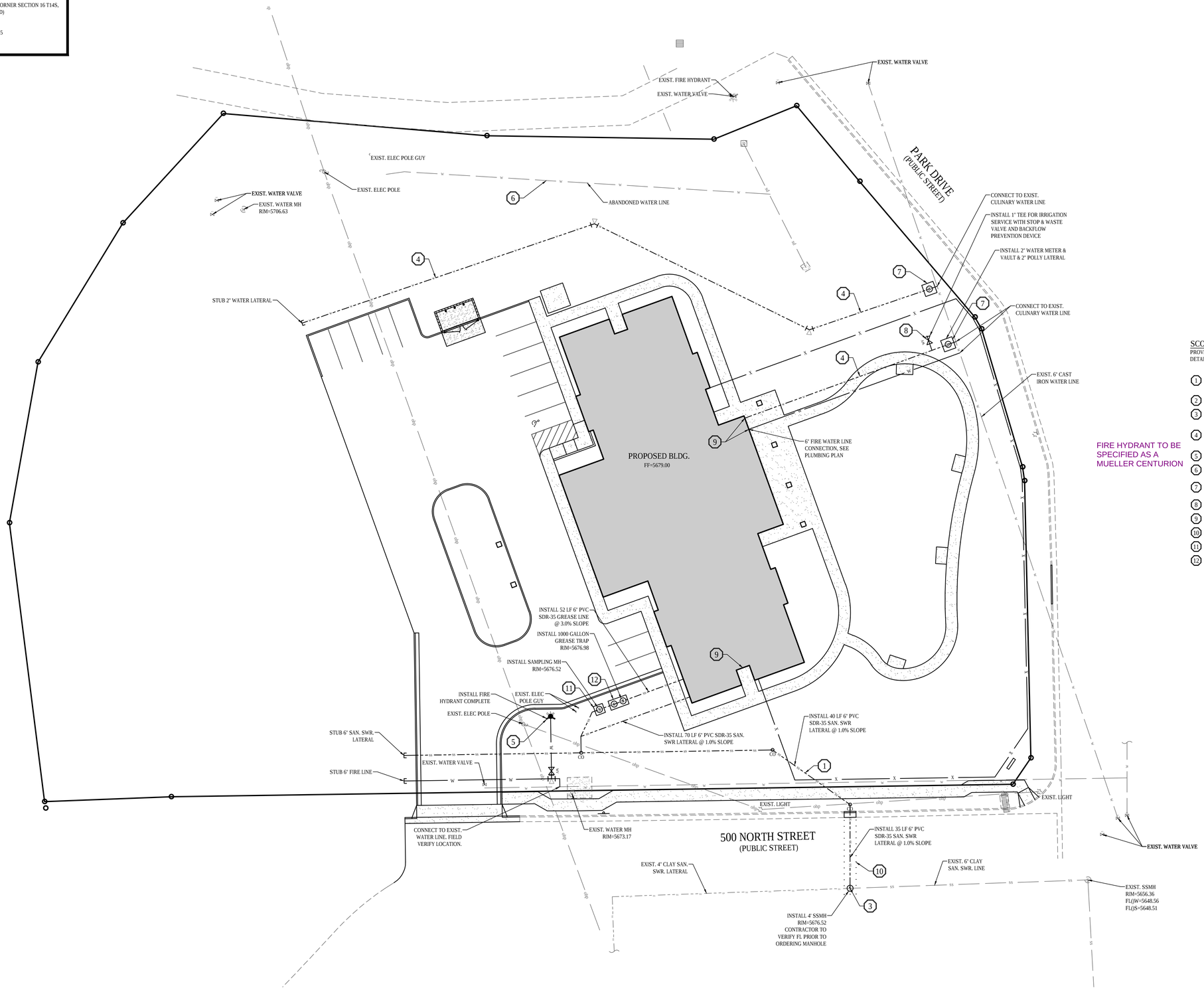

GENERAL NOTES

1. ALL WORK TO COMPLY WITH THE GOVERNING AGENCY'S STANDARDS AND SPECIFICATIONS.
2. EXISTING UNDERGROUND UTILITIES AND IMPROVEMENTS ARE SHOWN IN THEIR APPROXIMATE LOCATIONS BASED UPON RECORD INFORMATION AVAILABLE AT THE TIME OF PREPARATION OF THESE PLANS. LOCATIONS MAY NOT HAVE BEEN VERIFIED IN THE FIELD AND NO GUARANTEE IS MADE AS TO THE ACCURACY OR COMPLETENESS OF THE INFORMATION SHOWN. IT SHALL BE THE RESPONSIBILITY OF THE CONTRACTOR TO DETERMINE THE EXISTENCE AND LOCATION OF THE UTILITIES SHOWN ON THESE PLANS OR INDICATED IN THE FIELD BY LOCATING SERVICES. ANY ADDITIONAL COSTS INCURRED AS A RESULT OF THE CONTRACTOR'S FAILURE TO VERIFY THE LOCATIONS OF EXISTING UTILITIES PRIOR TO THE BEGINNING OF CONSTRUCTION IN THEIR VICINITY SHALL BE BORNE BY THE CONTRACTOR AND ASSUMED INCLUDED IN THE CONTRACT. THE CONTRACTOR IS TO VERIFY ALL CONNECTION POINTS WITH THE EXISTING UTILITIES. THE CONTRACTOR IS RESPONSIBLE FOR ANY DAMAGE CAUSED TO THE EXISTING UTILITIES AND UTILITY STRUCTURES THAT ARE TO REMAIN. IF CONFLICTS WITH EXISTING UTILITIES OCCUR, THE CONTRACTOR SHALL NOTIFY THE ENGINEER PRIOR TO CONSTRUCTION TO DETERMINE IF ANY FIELD ADJUSTMENTS SHOULD BE MADE.
3. ALL SANITARY SEWER INFRASTRUCTURE TO BE INSTALLED PER GOVERNING AGENCY STANDARD PLANS AND SPECIFICATIONS.
4. ALL WATER INFRASTRUCTURE TO BE INSTALLED PER GOVERNING AGENCY OR APWA STANDARD PLANS AND SPECIFICATIONS.
6. DEFLECT OR LOOP ALL WATERLINES TO AVOID CONFLICTS WITH OTHER UTILITIES PER GOVERNING AGENCY'S STANDARDS AND SPECIFICATIONS.
7. PROJECT SHALL COMPLY WITH ALL UTAH DIVISION OF DRINKING WATER RULES AND REGULATIONS INCLUDING, BUT NOT LIMITED TO, THOSE PERTAINING TO BACKFLOW PROTECTION AND CROSS CONNECTION PREVENTION.
8. THE CONTRACTOR IS TO COORDINATE ALL UTILITIES WITH MECHANICAL/PLUMBING PLANS.
9. NOTIFY ENGINEER OF ANY DISCREPANCIES IN DESIGN OR STAKING BEFORE PLACING UTILITY STRUCTURES OR PIPES.
10. THE CONTRACTOR SHALL ADJUST TO GRADE ALL EXISTING UTILITIES AS NEEDED PER LOCAL GOVERNING AGENCY'S STANDARDS AND SPECIFICATIONS.
11. THE CONTRACTOR IS TO PROTECT AND PRESERVE ALL EXISTING IMPROVEMENTS, UTILITIES, AND SIGNS, ETC. UNLESS OTHERWISE NOTED ON THESE PLANS.

SCOPE OF WORK:

PROVIDE, INSTALL AND/OR CONSTRUCT THE FOLLOWING PER THE SPECIFICATIONS GIVEN OR REFERENCED, THE DETAILS NOTED, AND/OR AS SHOWN ON THE CONSTRUCTION DRAWINGS:

1. SDR-35 PVC SANITARY SEWER LATERAL, INCLUDING CLEANOUTS AT MAXIMUM 100-FOOT SPACING. INSTALLATION AND TRENCHING PER GOVERNING AGENCY'S STANDARDS AND SPECIFICATIONS. LENGTH AND SLOPE PER PLAN.
2. SANITARY SEWER CLEANOUT PER GOVERNING AGENCY'S STANDARDS AND SPECIFICATIONS.
3. CONNECT TO EXISTING SEWER MAIN PER GOVERNING AGENCY'S STANDARDS AND SPECIFICATIONS.
4. C-900 PVC WATER LINE, INCLUDING ALL THRUST BLOCKING AND FITTINGS, PER GOVERNING AGENCY'S STANDARDS AND SPECIFICATIONS. INSTALLATION AND TRENCHING PER APWA STANDARDS AND SPECIFICATIONS.
5. FIRE HYDRANT ASSEMBLY COMPLETE PER PRICE CITY ENGINEERING - MUELLER CENTURION..
6. ABANDON EXISTING WATER LATERAL IN PLACE PER CITY STANDARDS AND SPECIFICATIONS.
7. 2" CULINARY WATER METER AND CONCRETE VAULT PER APWA STANDARD PLAN NO. 505 AND SPECIFICATIONS.
8. POINT OF CONNECTION FOR IRRIGATION CONTRACTOR.
9. SEE MECHANICAL PLANS FOR CONTINUATION.
10. SAWCUT, REMOVE AND PROPERLY REPLACE EXISTING ASPHALT PAVEMENT.
11. INSTALL SAMPLING MANHOLE PER PRICE CITY STANDARDS AND SPECIFICATIONS. SEE SHEET C-501.
12. INSTALL GREASE TRAP PER PRICE CITY STANDARDS AND SPECIFICATIONS. SEE SHEET C-501.

HORIZONTAL GRAPHIC SCALE

20 0 10 20 40

(IN FEET)
HORZ: 1 inch = 20 ft.

ENSIGN
THE STANDARD IN ENGINEERING

SALT LAKE CITY
45 W. 10000 S., Suite 500
Sandy, UT 84070
Phone: 801.255.0529

LAYTON
Phone: 801.547.1100

TOOELE
Phone: 435.843.3590

CEDAR CITY
Phone: 435.865.1453

RICHFIELD
Phone: 435.896.2983

WWW.ENSIGNENG.COM

FOR:
TENDER CARE HOSPICE
503 WEST 2600 SOUTH, SUITE 200
BOUNTIFUL, UTAH 84010
CONTACT:
RICHARD NUFFER
PHONE: 801-294-0560

PRICE MC ASSISTED LIVING CENTER

PARK DRIVE & 500 NORTH STREET
PRICE, UTAH

LICENSED PROFESSIONAL ENGINEER
7690015
CHAD R. THOMAS
3-4-16
STATE OF UTAH

FOR PERMIT

UTILITY PLAN

PROJECT NUMBER	PRINT DATE
6803	4/28/16
DRAWN BY	CHECKED BY
PROJECT MANAGER	

C-300

CALL BLUESTAKES @ 811 AT LEAST 48 HOURS PRIOR TO THE COMMENCEMENT OF ANY CONSTRUCTION.

Know what's below. Call before you dig.

BENCHMARK

NORTH QUARTER CORNER SECTION 16 T14S, R10E SLB&M (FOUND)

ELEVATION = 5698.15

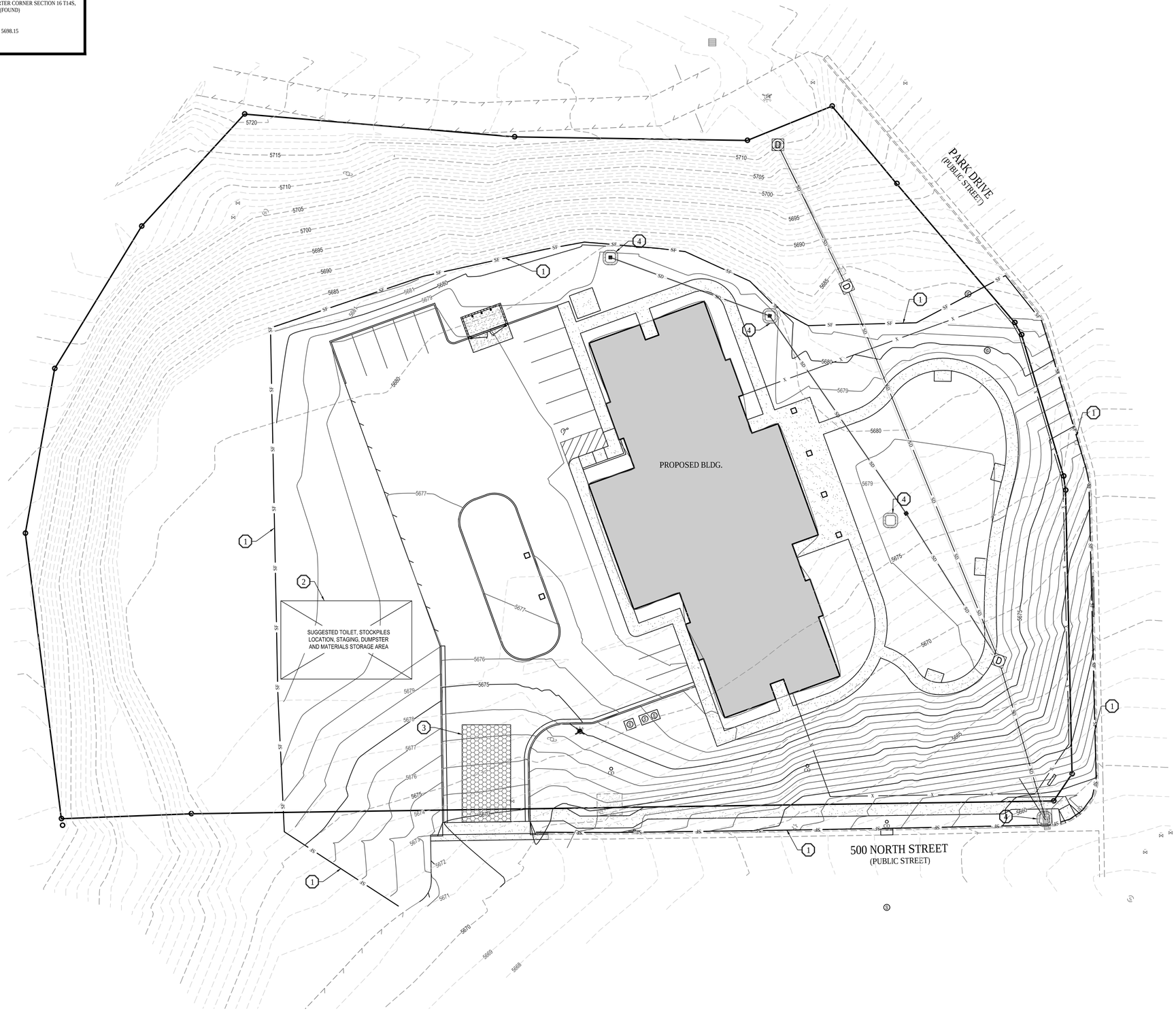

GENERAL NOTES

1. THIS PLAN IS DESIGNED AS A FIRST APPRAISAL OF NECESSARY MEANS TO PROTECT THE WATERS OF THE STATE FROM POTENTIAL POLLUTION. IT IS THE RESPONSIBILITY OF THE OWNER/OPERATOR TO ADD WARRANTED BEST MANAGEMENT PRACTICES (BMP'S) AS NECESSARY, MODIFY THOSE SHOWN AS APPROPRIATE, AND DELETE FROM THE PROJECT THOSE FOUND TO BE UNNECESSARY. FEDERAL AND STATE LAW ALLOWS THESE UPDATES TO BE MADE BY THE OWNER/OPERATOR ONSITE AND RECORDED BY THE OWNER/OPERATOR ON THE COPY OF THE SWPPP KEPT ONSITE.
2. DISTURBED LAND SHALL BE KEPT TO A MINIMUM. STABILIZATION MEASURES SHALL BE INITIATED AS SOON AS PRACTICABLE IN PORTIONS OF THE SITE WHERE CONSTRUCTION ACTIVITIES HAVE TEMPORARILY OR PERMANENTLY CEASED, BUT IN NO CASE MORE THAN 14 DAYS AFTER THE CONSTRUCTION ACTIVITY IN THAT PORTION OF THE SITE HAS TEMPORARILY OR PERMANENTLY CEASED. HOWEVER, WHERE CONSTRUCTION ACTIVITY ON A PORTION OF THE SITE IS TEMPORARILY CEASED, AND EARTH DISTURBING ACTIVITIES WILL BE RESUMED WITHIN 21 DAYS, TEMPORARY STABILIZATION MEASURES DO NOT HAVE TO BE INITIATED ON THAT PORTION OF THE SITE.
3. RESEED DISTURBED LAND WITH NATIVE GRASS MIXTURE WITHIN 14 CALENDAR DAYS OF ACHIEVEMENT OF FINISH GRADE TO STABILIZE SOILS IF LAND IS NOT TO BE RE-WORKED WITHIN 14 CALENDAR DAYS OF THE CESSATION OF CONSTRUCTION ACTIVITIES AT THAT LOCATION.
4. DETAILS SHOWN ARE TO BE EMPLOYED TO PROTECT RUNOFF AS APPROPRIATE DURING CONSTRUCTION. NOT ALL DETAILS ARE NECESSARY AT ALL PHASES OF THE PROJECT. IT SHALL BE THE RESPONSIBILITY OF THE OWNER/OPERATOR TO USE APPROPRIATE BEST MANAGEMENT PRACTICES AT THE APPROPRIATE PHASE OF CONSTRUCTION. SEE SWPPP FOR BMP IMPLEMENTATION SCHEDULE.
5. VARIOUS BEST MANAGEMENT PRACTICES HAVE BEEN SHOWN ON THE PLANS AT SUGGESTED LOCATIONS. THE CONTRACTOR MAY MOVE AND RECONFIGURE THESE BMP'S TO OTHER LOCATIONS IF PREFERRED, PROVIDED THE INTENT OF THE DESIGN IS PRESERVED.
6. NOT ALL POSSIBLE BMP'S HAVE BEEN SHOWN. THE CONTRACTOR IS RESPONSIBLE TO APPLY CORRECT MEASURES TO PREVENT THE POLLUTION OF STORM WATER PER PROJECT SWPPP.
7. A UPDES (UTAH POLLUTANT DISCHARGE ELIMINATION SYSTEM) PERMIT IS REQUIRED FOR ALL CONSTRUCTION ACTIVITIES 1 ACRE OR MORE.

SCOPE OF WORK:

PROVIDE, INSTALL AND/OR CONSTRUCT THE FOLLOWING PER THE SPECIFICATIONS GIVEN OR REFERENCED, THE DETAILS NOTED, AND/OR AS SHOWN ON THE CONSTRUCTION DRAWINGS:

1. SILT FENCE PER DETAIL 8/C-500.
2. PORTABLE TOILET PER DETAIL 9/C-500.
3. VEHICLE WASHDOWN AND STABILIZED CONSTRUCTION ENTRANCE PER DETAIL 10/C-500.
4. INLET PROTECTION PER DETAIL 13/C-500.

NORTH

HORIZONTAL GRAPHIC SCALE

20 0 10 20 40

(IN FEET)
HORZ: 1 inch = 20 ft.

ENSIGN
THE STANDARD IN ENGINEERING

SALT LAKE CITY
45 W. 10000 S., Suite 500
Sandy, UT 84070
Phone: 801.255.0529

LAYTON
Phone: 801.547.1100

TOOELE
Phone: 435.843.3590

CEDAR CITY
Phone: 435.865.1453

RICHFIELD
Phone: 435.896.2983

WWW.ENSIGNENG.COM

FOR:
TENDER CARE HOSPICE
503 WEST 2600 SOUTH, SUITE 200
BOUNTIFUL, UTAH 84010

CONTACT:
RICHARD NUFFER
PHONE: 801-294-0560

PRICE MC ASSISTED LIVING CENTER

PARK DRIVE & 500 NORTH STREET
PRICE, UTAH

LICENSED PROFESSIONAL ENGINEER
7690015
CHAD R. THOMAS
3-4-16
STATE OF UTAH

FOR PERMIT

EROSION CONTROL PLAN

PROJECT NUMBER	PRINT DATE
6803	3/4/16
DRAWN BY	CHECKED BY
PROJECT MANAGER	

C-400

NOTES:

1. SIGNS TO BE CENTERED AT FRONT OF PARKING SPACE.
2. HANDICAP PARKING LOGO, COLOR, HEIGHT, OF POLE, DIMENSIONS OF SIGN TO BE INSTALLED PER GOVERNMENTAL REQUIREMENTS.

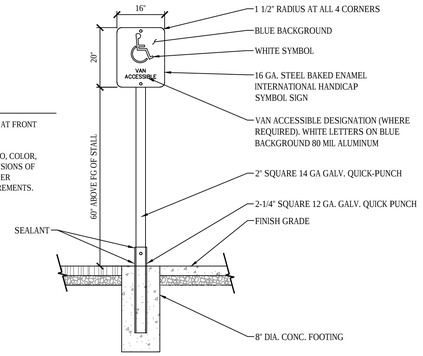

1 ACCESIBLE PARKING SIGN

SCALE: NONE

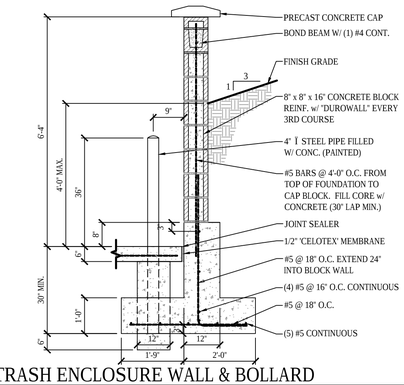

2 TRASH ENCLOSURE WALL & BOLLARD

SCALE: NONE

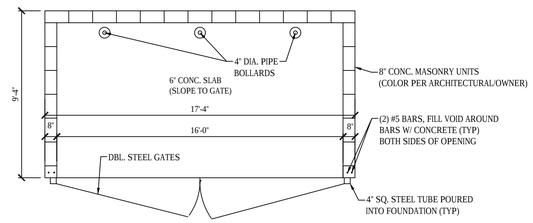

3 DOUBLE TRASH ENCLOSURE

SCALE: NONE

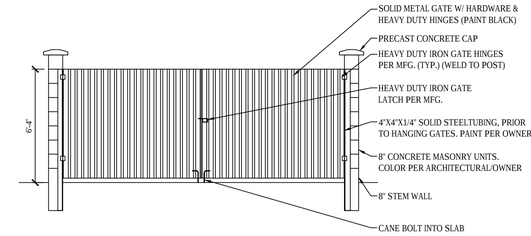

4 DOUBLE TRASH ENCLOSURE ELEVATION

SCALE: NONE

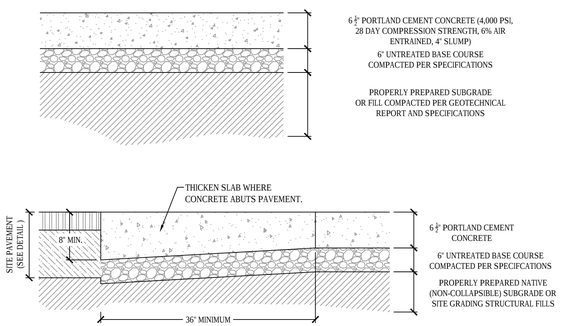

5 DUMPSTER PAD / APRON SECTION

SCALE: NONE

ASPHALT NOTES

1. ALL PAVING TO BE PLACED OVER PROPERLY PREPARED NATURAL SOILS AND/OR PROPERLY PREPARED EXISTING FILL SOILS AND PROPERLY COMPACTED STRUCTURAL FILL WHERE SPECIFIED.
2. ALL STRUCTURAL FILL TO BE COMPACTED TO A MINIMUM OF 95% OF THE MAXIMUM DRY DENSITY AS DETERMINED BY THE AASHTO T-180 (D-1557) METHOD OF COMPACTION. LIFTS SHOULD NOT EXCEED 8" IN LOOSE THICKNESS.
3. REMOVE SURFACE VEGETATION AND OTHER DELETERIOUS MATERIALS OVER THE ENTIRE AREA PREPARATION OF PROPOSED IMPROVEMENTS.

UPDATE PER GEOTECH REPORT

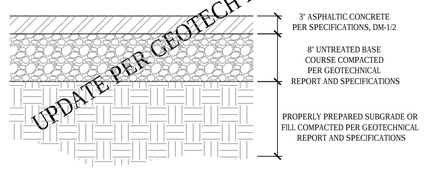

6 STANDARD ASPHALT SECTION

SCALE: NONE

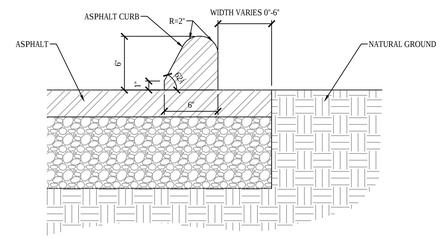

7 ASPHALT CURB

SCALE: NONE

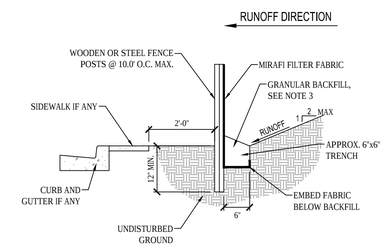

NOTES:

1. EXCAVATE 6"x6" TRENCH ALONG LIMITS OF DISTURBANCE AS SHOWN ON CONSTRUCTION DRAWINGS.
2. POSTS SHALL BE POSITIONED ON DOWNSTREAM SIDE OF FENCE.
3. LAY TOE-IN FABRIC FLAP IN BOTTOM OF TRENCH. BACKFILL TRENCH WITH FREE DRAINING GRANULAR MATERIAL. COMPACT TRENCH TO SATISFACTION OF THE ENGINEER OF RECORD.
4. SILT FENCE GEOTEXTILE SHALL MEET AASHTO M288-92 REQUIREMENTS.
5. REMOVE & DISPOSE OF SEDIMENT WHEN ACCUMULATION IS 50% OF EXPOSED FENCE HEIGHT.
6. 10' MAX. SPACING BETWEEN STAKES.
7. SILT FENCES SHALL BE INSTALLED ALONG CONTOURS, NOT UP AND DOWN SLOPES, WITH 10' OVERLAP AT BREAKS.

8 TEMPORARY SILT FENCE

SCALE: NONE

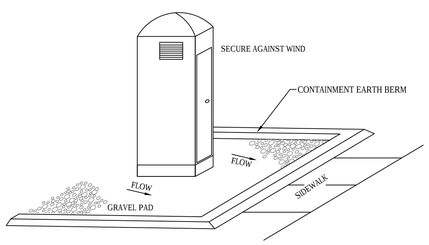

9 PORTABLE TOILET

SCALE: NONE

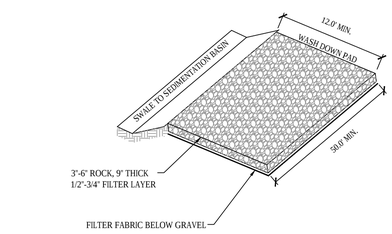

NOTE:

1. PLACE SIGN ADJACENT TO ENTRANCE " CONSTRUCTION TRAFFIC ONLY - ALL CONSTRUCTION TRAFFIC SHALL ENTER AND EXIT SITE AT THIS LOCATION"

10 STABILIZED CONSTRUCTION ENTRANCE

SCALE: NONE

NOTE:

1. CONSTRUCT PER NOTES AND SPECIFICATIONS ASSOCIATED WITH APWA STANDARD PLAN NO. 205.

11 24" COLLECTION CURB AND GUTTER

SCALE: NONE

12 ACCESIBLE RAMP (ONSITE)

SCALE: NONE

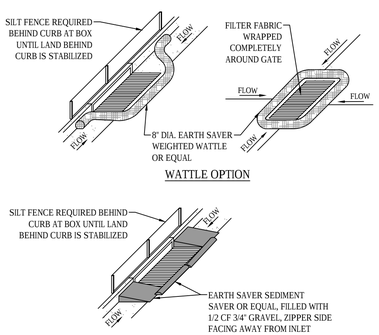

NOTES:

1. PLACE WATTLES OR GRAVEL BAGS TIGHT AGAINST CURB TO PREVENT SEDIMENT-LADEN WATER FROM GETTING BETWEEN CURB AND WATTLE/BAG.
2. PLACE WATTLES OR GRAVEL BAGS SUCH THAT FLOW DOES NOT OVERTOP CURB OR ROAD CENTERLINE.
3. INSPECT INLET PROTECTION AFTER EVERY LARGE STORM EVENT AND AT LEAST BI-WEEKLY, OR PER SWPPP REQUIREMENTS, WHICHEVER IS MORE STRINGENT, TO ENSURE THAT SEDIMENT CONTROL IS MEETING ITS DESIGN INTENT. MAINTAIN AND/OR REPLACE AS NEEDED.
4. REMOVE SEDIMENT ACCUMULATED WHEN IT REACHES 50% OF GRAVEL BAG OR WATTLE HEIGHT.
5. CONTRACTOR MAY SUBMIT AN ALTERNATIVE METHOD OF INLET PROTECTION. THE ALTERNATIVE METHOD SHALL BE APPROVED BY THE CITY INSPECTOR AND THE ENGINEER OF RECORD.
6. BEFORE PLACEMENT OF CURB, STABILIZATION OF LAND BEHIND CURB, AND/OR PAVING, MAINTAIN TOP OF INLET AT 6" ABOVE GRADE, AND SURROUND WITH SILT FENCE FOR SEDIMENTATION AROUND BOX. MAINTAIN SILT FENCE BEHIND BOX UNTIL LAND BEHIND CURB IS STABILIZED.

13 SAG INLET PROTECTION

SCALE: NONE

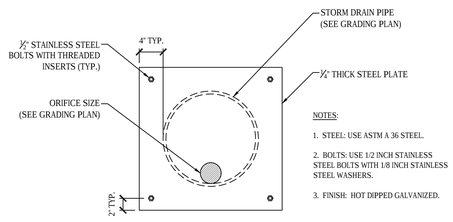

NOTES:

1. STEEL: USE ASTM A 36 STEEL.
2. BOLTS: USE 1/2 INCH STAINLESS STEEL BOLTS WITH 1/8 INCH STAINLESS STEEL WASHERS.
3. FINISH: HOT DIPPED GALVANIZED.

14 ORIFICE PLATE

SCALE: NONE

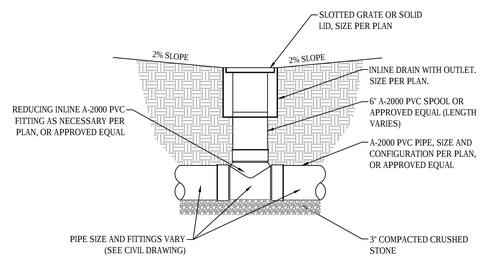

15 YARD DRAIN

SCALE: NONE

ENSIGN
THE STANDARD IN ENGINEERING

SALT LAKE CITY
45 W. 10000 S., Suite 500
Sandy, UT 84070
Phone: 801.255.0529

LAYTON
Phone: 801.547.1100

TOOELE
Phone: 435.843.3590

CEDAR CITY
Phone: 435.865.1453

RICHFIELD
Phone: 435.896.2983

WWW.ENSIGNENG.COM

FOR:
TENDER CARE HOSPICE
503 WEST 2600 SOUTH, SUITE 200
BOUNTIFUL, UTAH 84010

CONTACT:
RICHARD NUFFER
PHONE: 801-294-0560

PRICE MC ASSISTED LIVING CENTER

PARK DRIVE & 500 NORTH STREET
PRICE, UTAH

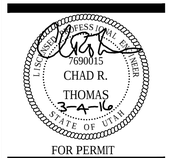

FOR PERMIT

DETAILS

PROJECT NUMBER	PRINT DATE
6803	3/4/16
DRAWN BY	CHECKED BY
PROJECT MANAGER	

C-500

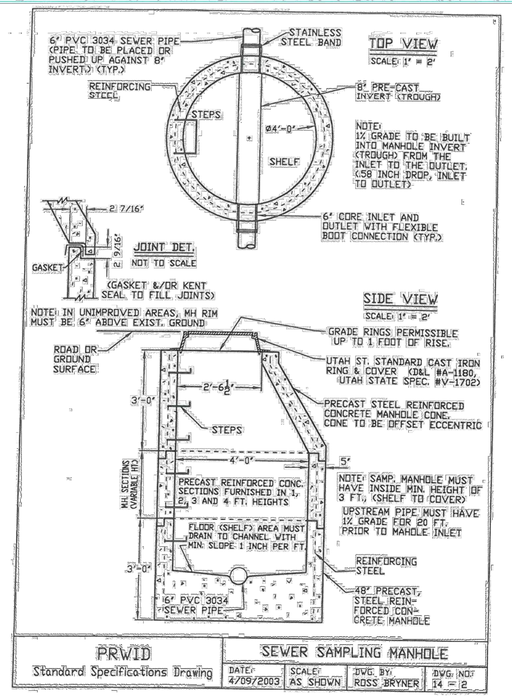

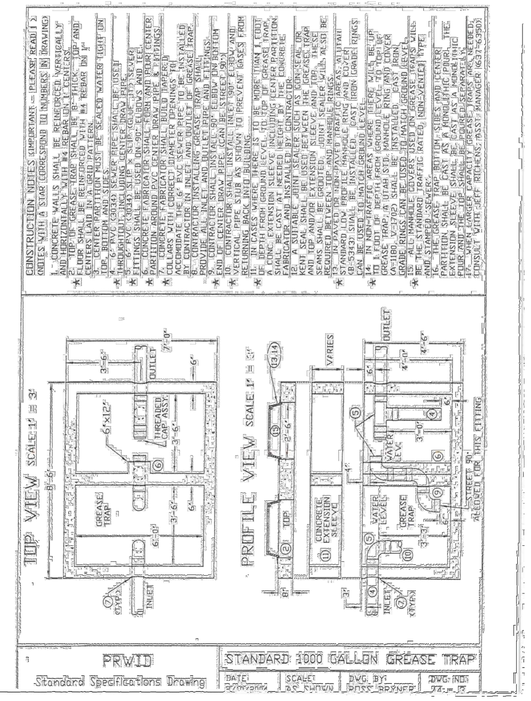

ENSIGN
THE STANDARD IN ENGINEERING

SALT LAKE CITY
45 W. 10000 S., Suite 500
Sandy, UT 84070
Phone: 801.255.0529

LAYTON
Phone: 801.547.1100

TOOELE
Phone: 435.843.3590

CEDAR CITY
Phone: 435.865.1453

RICHFIELD
Phone: 435.896.2983

WWW.ENSIGNENG.COM

FOR:
TENDER CARE HOSPICE
503 WEST 2600 SOUTH, SUITE 200
BOUNTIFUL, UTAH 84010

CONTACT:
RICHARD NUFFER
PHONE: 801-294-0560

PRICE MC ASSISTED LIVING CENTER

PARK DRIVE & 500 NORTH STREET
PRICE, UTAH

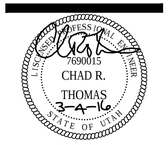

FOR PERMIT

DETAILS

PROJECT NUMBER	PRINT DATE
6803	3/4/16
DRAWN BY	CHECKED BY
PROJECT MANAGER	

C-501

CALL BLUESTAKES @ 811 AT LEAST 48 HOURS PRIOR TO THE COMMENCEMENT OF ANY CONSTRUCTION.

Know what's below. Call before you dig.

BENCHMARK

NORTH QUARTER CORNER SECTION 16 T14S, R10E SLB&M (FOUND)

ELEVATION = 5698.15

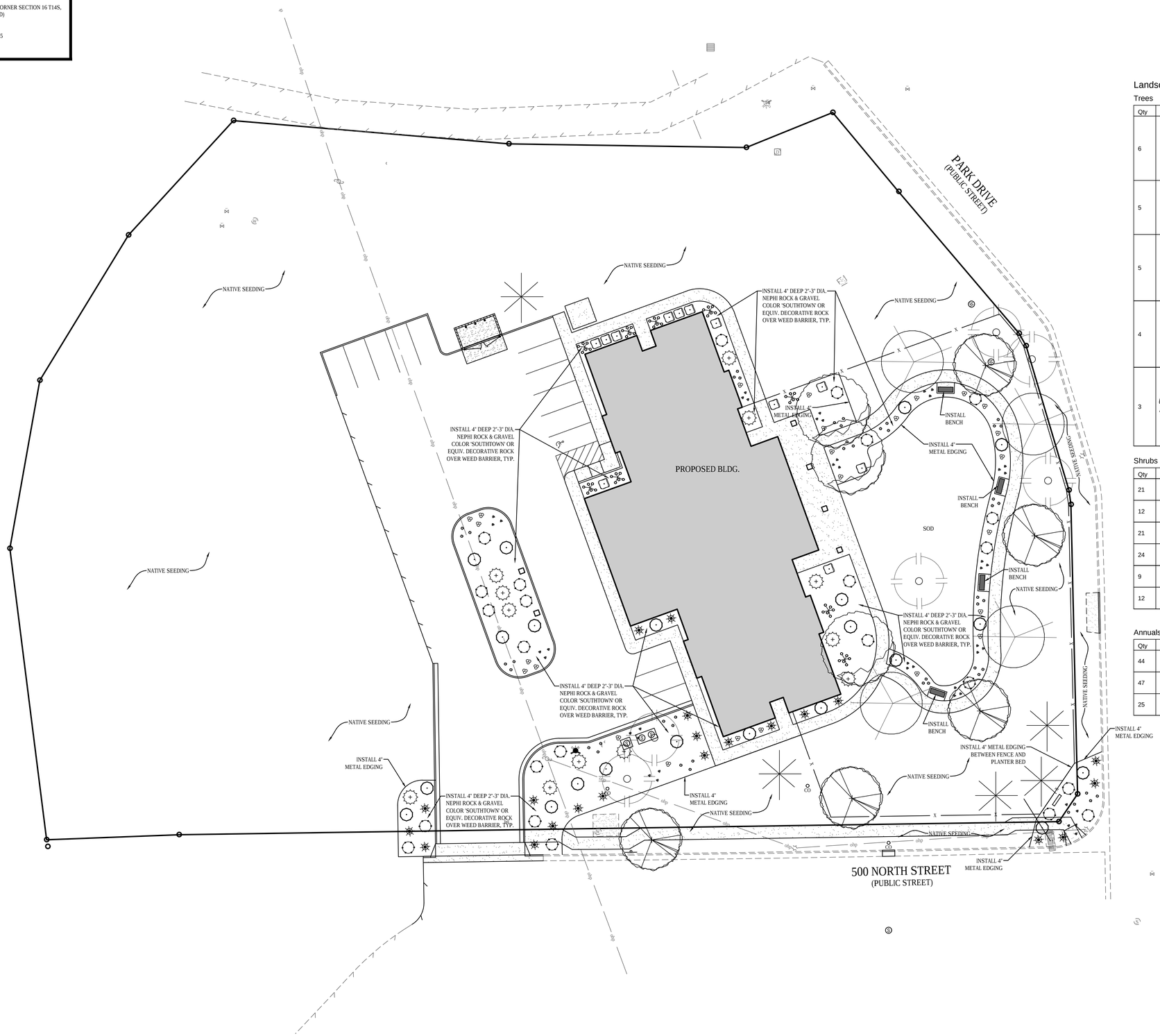

SITE SUMMARY TABLE		
DESCRIPTION	AREA (SF)	PERCENTAGE
PAVEMENT	20,301	19%
ROOF	9,942	9%
LANDSCAPING	78,617	72%
TOTAL SITE	108,860 2.50 ACRES	100%

Landscape

Trees

Qty	Symbol	Common Name	Botanical Name	Plant Size
6		Existing Tree to Remain (Preserve and Protect throughout Project)	N/A	N/A
5		Pine, Austrian	Pinus nigra	6' Min.
5		Zelkova, Japanese 'Village Green'	Zelkova serrata 'Village Green'	3" Cal.
4		Redbud, Eastern	Cercis canadensis	3" Cal.
3		Ash, Velvet	Fraxinus velutina	3" Cal.

Shrubs

Qty	Symbol	Common Name	Botanical Name	Plant Size
21		Pine, Mugo	Pinus mugo 'Compacta'	5 Gallon
12		Mountain Lover	Pachistima myrsinites	5 Gallon
21		Sand or Western Cherry	Prunus besseyi	5 Gallon
24		Gro-low Sumac	Rhus aromatica 'Gro-low'	5 Gallon
9		Creeping Oregon Grape	Mahonia repens	5 Gallon
12		Dwarf Smooth Sumac	Rhus glabra v cistmontana	5 Gallon

Annuals-Perennials

Qty	Symbol	Common Name	Botanical Name	Plant Size
44		Beard Tongue, Eaton's	Penstemon eatonii	1 Gallon
47		Beard Tongue, Wasatch	Penstemon cyananthus	1 Gallon
25		Whipple's Penstemon	Penstemon linarioides	1 Gallon

NORTH

HORIZONTAL GRAPHIC SCALE

20 0 10 20 40

(IN FEET)
HORZ: 1 inch = 20 ft.

ENSIGN
THE STANDARD IN ENGINEERING

SALT LAKE CITY
45 W. 10000 S., Suite 500
Sandy, UT 84070
Phone: 801.255.0529

LAYTON
Phone: 801.547.1100

TOOELE
Phone: 435.843.3590

CEDAR CITY
Phone: 435.865.1453

RICHFIELD
Phone: 435.896.2983

WWW.ENSIGNENG.COM

FOR:
TENDER CARE HOSPICE
503 WEST 2600 SOUTH, SUITE 200
BOUNTIFUL, UTAH 84010

CONTACT:
RICHARD NUFFER
PHONE: 801-294-0560

PRICE MC ASSISTED LIVING CENTER

PARK DRIVE & 500 NORTH STREET
PRICE, UTAH

FOR PERMIT

LANDSCAPE PLAN

PROJECT NUMBER	PRINT DATE
6803	3/4/16
DRAWN BY	CHECKED BY
PROJECT MANAGER	

L-100

CALL BLUESTAKES @ 811 AT LEAST 48 HOURS PRIOR TO THE COMMENCEMENT OF ANY CONSTRUCTION.

Know what's below. Call before you dig.

BENCHMARK

NORTH QUARTER CORNER SECTION 16 T14S, R10E SL&M (FOUND)

ELEVATION = 5698.15

GENERAL LANDSCAPE NOTES:

1. LANDSCAPE CONTRACTOR HAS THE OPTION TO SUBSTITUTE PLANT MATERIAL IF SPECIFIED GENUS, SPECIES, AND/OR VARIETIES ARE NOT LOCALLY OR REGIONALLY AVAILABLE. LANDSCAPE CONTRACTOR SHALL REPLACE SAID PLANTS WITH THOSE OF LIKE HARDINESS ZONE, SIZE, FORM, MOISTURE AND SOLAR REQUIREMENTS, AND MEET THE GENERAL INTENT OF THE ORIGINAL DESIGN. ANY REPLACEMENT PLANTINGS SHALL BE APPROVED BY ENSIGN ENGINEERING AND LAND SURVEYING INC. OR PROJECT REPRESENTATIVE PRIOR TO INSTALLATION. ALL REPLACEMENT PLANT MATERIALS SHALL CONFORM TO CITY APPROVED PLANTS. ALL PLANTING SUBSTITUTION WILL BE APPROVED BY CITY.
2. LOCATE ALL UTILITIES AND SITE LIGHTING CONDUITS BEFORE LANDSCAPE CONSTRUCTION BEGINS.
3. NOTIFY LANDSCAPE REPRESENTATIVE OF ANY LAYOUT DISCREPANCIES PRIOR TO ANY PLANTING.
4. FERTILIZE ALL PLANTS AT THE TIME OF PLANTING WITH TIME RELEASE FERILIZER.
5. MULCH, PER PLAN, SHALL BE USED AS A FOUR INCH (4") TOP DRESSING IN ALL PLANT BEDS AND AROUND ALL TREES. SINGLE TREES OR SHRUBS SHALL BE MULCHED TO THE OUTSIDE EDGE OF THE SAUCER OR LANDSCAPE ISLAND.
6. LANDSCAPE CONTRACTOR SHALL INSTALL AN UNDERGROUND, POP-UP IRRIGATION SYSTEM WHICH PROVIDES COMPLETE COVERAGE OF THE SITE AND MEETS COUNTY/CITY REQUIREMENTS AT OR BEFORE THE INSTALLATION OF LANDSCAPE MATERIALS.
7. ALL LANDSCAPE MATERIALS SHALL BE IN COMPLIANCE WITH THE AMERICAN STANDARD FOR NURSERY STOCK (ANSI-Z60.1-1986)
8. CONTRACTOR SHALL USE AVAILABLE SUITABLE TOPSOIL THAT HAD BEEN STOCKPILED ONSITE. IF QUANTITIES ARE NOT SUFFICIENT TO MEET SITE MINIMUMS CONTRACTOR SHALL PROVIDE ADDITIONAL MATERIALS. ADDITIONAL MATERIAL SHALL BE SUPPLIED BY A COMMERCIAL TOPSOIL SUPPLIER
9. PROVIDE THE FOLLOWING TOP SOIL MINIMUMS:
   A. 4" TOPSOIL IN ALL SOD AREAS
   B. 6" TOP SOIL IN ALL PLANTER BEDS
10. WEED FABRIC SHALL BE A DEWITT SUNBELT WOVEN GROUND COVER INSTALLED W/ GROUND STAPLES ACCORDING TO MANUFACTURER RECCOMMENDATIONS.

IRRIGATION NOTES:

1. IRRIGATION SYSTEM SHALL BE INSTALLED IN CONFORMANCE WITH ALL APPLICABLE STATE AND LOCAL CODES AND ORDINANCES BY A LICENSED CONTRACTOR AND EXPERIENCED WORKMEN. CONTRACTOR TO OBTAIN AND PAY FOR ALL REQUIRED PERMITS.
2. CONTRACTOR TO CONFIRM THE LOCATION OF EXISTING UTILITIES PRIOR TO ANY EXCAVATION. CONTRACTOR TO REPAIR ANY DAMAGE CAUSED BY OR DURING THE PERFORMANCE OF HIS WORK AT NO ADDITIONAL COST.
3. PARALLEL PIPES MAY BE INSTALLED IN A COMMON TRENCH. PIPES ARE NOT TO BE INSTALLED ONE ABOVE THE OTHER.
4. TRENCHES ARE TO BE DEEP ENOUGH TO ALLOW FOR 18" MIN. COVER, ON MAIN LINES AND 12" MIN. COVER ON LATERAL LINES. BACKFILL TO BE WATERED IN AND COMPACTED.
5. ALL MAIN AND LATERAL LINES SHALL BE SCHEDULE 40 PVC PIPE.
6. ALL ELECTRICAL VALVES SHALL BE INSTALLED IN VALVE BOXES WITH LOCKING LIDS.
7. DIRECT BURIAL 14 GAGE WIRE WITH SPEARS DRI-SPLICE CONNECTORS (OR EQUAL) SHALL BE USED. 6" SEPERATION BETWEEN MAIN LINE & WIRE EITHER BELOW PIPE OR TO SIDE.
8. CONTRACTOR SHALL BE RESPONSIBLE TO ENSURE PROPER COVERAGE OF ALL IRRIGATED AREAS.
9. CONTRACTOR SHALL BE RESPONSIBLE FOR GRADING ALL LINES AND SHALL INSTALL MANUAL DRAINS AT ALL VALVE MANIFOLDS AND AT ALL LOW POINTS ON MAIN LINES - MANUAL VALVES SHALL BE INSTALLED IN WELL MARKED VALVE BOXES WITH LOCKING LIDS. KING AUTOMATIC DRAIN VALVES TO BE INSTALLED AT ALL LOW POINTS ON LATERAL LINES. CONTRACTOR TO INSTALL QUICK COUPLER VALVE AT ALL VALVE MANIFOLD LOCATIONS.
10. ALL SPRINKLER LINES AND CONTROL WIRES CROSSING UNDER PAVED AREAS SHALL BE INSTALLED IN A SLEEVE TWICE THE SIZE OF THE PIPE.
11. FLUSH MAIN LINES PRIOR TO THE INSTALLATION OF REMOTE CONTROL VALVES. FLUSH LATERAL LINES PRIOR TO THE INSTALLATION OF HEADS. MAIN LINES TO BE INSPECTED FOR LEAKS UNDER FULL PRESSURE PRIOR TO BACKFILLING TRENCHES.
12. CONTRACTOR TO MAINTAIN A SET OF "AS BUILT" DRAWINGS, A REPRODUCABLE COPY OF WHICH WILL BE TURNED OVER TO THE OWNER'S REPRESENTATIVE UPON COMPLETION.
13. THE OWNER RESERVES THE RIGHT TO REJECT MATERIAL OR WORK WHICH DOES NOT CONFORM TO THESE DRAWINGS. REJECTED WORK SHALL BE REMOVED OR CORRECTED AT CONTRACTOR'S EXPENSE.

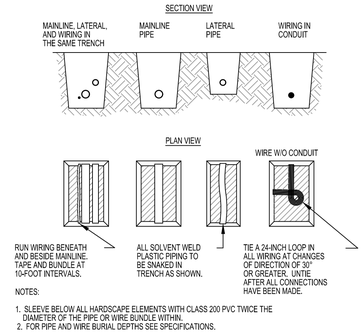

5 PIPE AND WIRE TRENCHING

SCALE: NONE

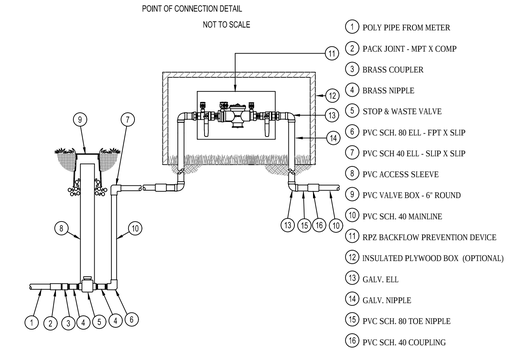

1 BACKFLOW PREVENTER

SCALE: NONE

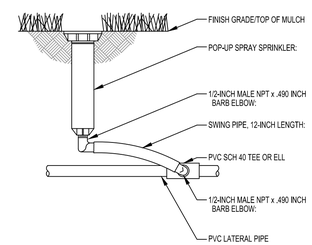

6 POP-UP SPRAY SPRINKLER

SCALE: NONE

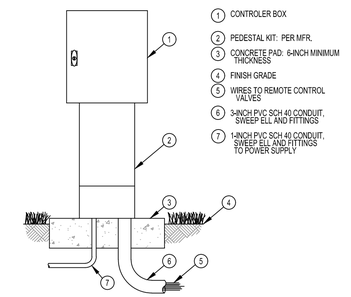

2 IRRIGATION CONTROLLER

SCALE: NONE

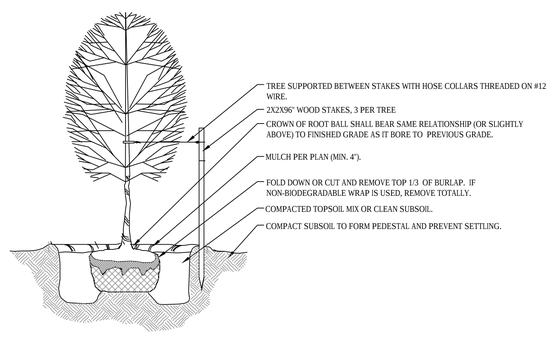

9 TREE PLANTING DETAIL

SCALE: NONE

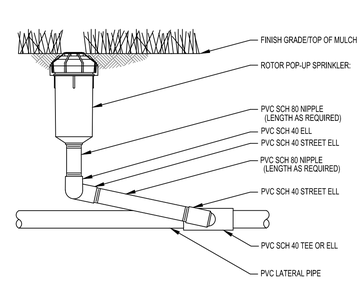

7 ROTOR POP-UP HEAD

SCALE: NONE

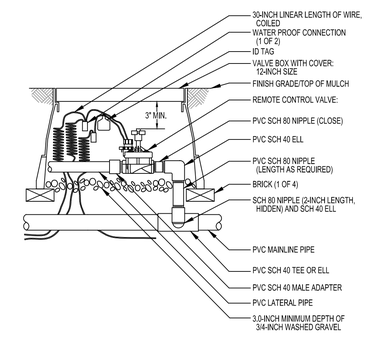

3 CONTROL VALVE

SCALE: NONE

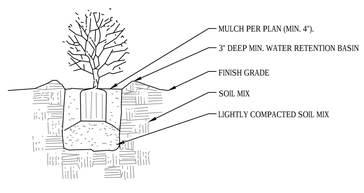

TYPICAL PLANTING PIT DEPTH = 2 X DEPTH OF BALL.
TYPICAL WIDTH = 2 X WIDTH OF BALL

10 SHRUB PLANTING DETAIL

SCALE: NONE

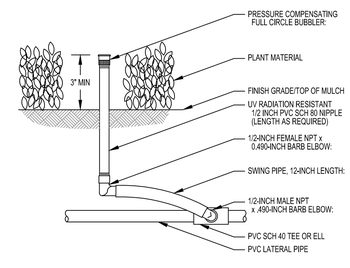

8 BUBBLER DETAIL

SCALE: NONE

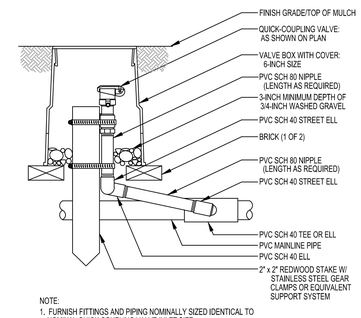

4 QUICK-COUPLING VALVE

SCALE: NONE

ENSIGN
THE STANDARD IN ENGINEERING

SALT LAKE CITY
45 W. 10000 S., Suite 500
Sandy, UT 84070
Phone: 801.255.0529

LAYTON
Phone: 801.547.1100

TOOELE
Phone: 435.843.3590

CEDAR CITY
Phone: 435.865.1453

RICHFIELD
Phone: 435.896.2983

WWW.ENSIGNENG.COM

FOR:
TENDER CARE HOSPICE
503 WEST 2600 SOUTH, SUITE 200
BOUNTIFUL, UTAH 84010

CONTACT:
RICHARD NUFFER
PHONE: 801-294-0560

PRICE MC ASSISTED LIVING CENTER

PARK DRIVE & 500 NORTH STREET
PRICE, UTAH

FOR PERMIT

NO.	DATE	REVISION	BY
1		FOR REVIEW	
2			
3			
4			
5			
6			
7			
8			

LANDSCAPE AND IRRIGATION DETAILS

PROJECT NUMBER: 6803
PRINT DATE: 3/4/16
DRAWN BY
CHECKED BY
PROJECT MANAGER

L-200

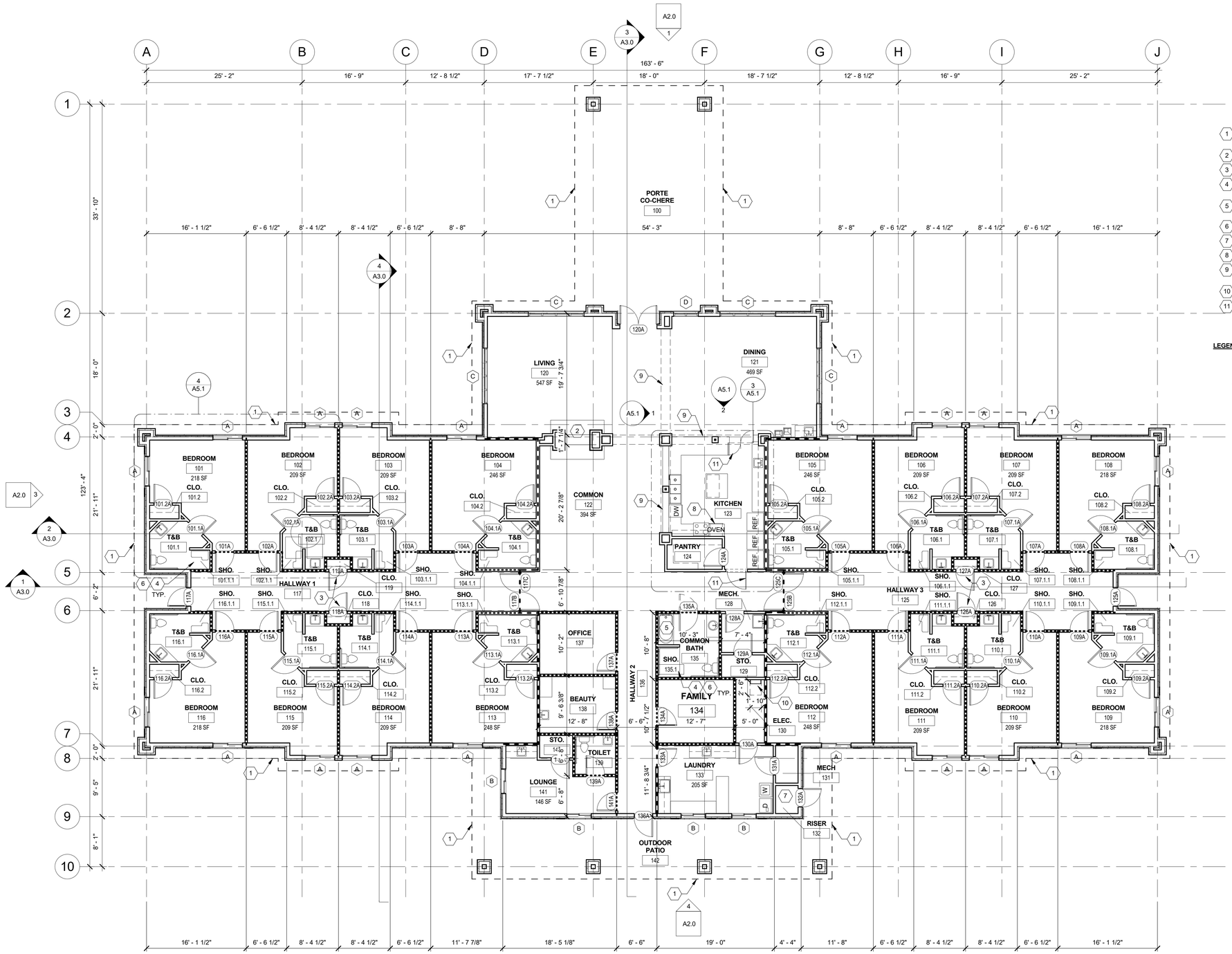

KEYED NOTES:

1. LINE OF ROOF SOFFIT ABOVE. SEE REFLECTED CEILING PLAN.
2. STONE FIREPLACE W/ GAS INSERT.
3. LINEN CLOSET W/ 5 MELAMINE SHELVES.
4. RECESS ALL CONCRETE FLOOR SLAB AT COMMON SHOWER.
5. STEP-IN TUB W/ ACCESSIBLE SEAT, GRAB BARS & CONTROLS.
6. ROLL-IN SHOWER.
7. FIRE RISER & WATER SHUT OFF.
8. DOUBLE STACK RANGE OVEN.
9. FRAMED ARCHWAY SOFFIT. SEE INTERIOR ELEVATIONS.
10. ATTIC ACCESS.
11. DUMBWAITER DOOR

LEGEND

- 1-HR. WALL: FULL HEIGHT WALL UP TO UNDERSIDE OF ROOF DECK W/ SOUND BATT INSULATION
- SOUND/SMOKE WALL: WALL UP TO UNDERSIDE OF CEILING W/ SOUND BATT INSULATION

1 MAIN FLOOR PLAN
SCALE: 1/8" = 1'-0"

ENSIGN
THE STANDARD IN ENGINEERING

SALT LAKE CITY
45 W. 10000 S., Suite 500
Sandy, UT 84070
Phone: 801.255.0529

LAYTON
Phone: 801.547.1100

TOOELE
Phone: 435.843.3590

CEDAR CITY
Phone: 435.865.1453

RICHFIELD
Phone: 435.590.0187

WWW.ENSIGNENG.COM

CLIENT INFORMATION:

CLIENT INFORMATION:

TENDER CARE HOSPICE ASSISTED LIVING FACILITY

5TH NORTH AND 1ST EAST STREET PRICE CITY, UTAH

PERMIT 03/08/16

NO.	DATE	REVISION

FLOOR PLAN

PROJECT NUMBER
6803
DATE
12-31-15
DRAWN BY
R. MALIGON
PROJECT ENGINEER
A. HAWKINS
PROJECT MANAGER
C. DUNCAN

A1.0

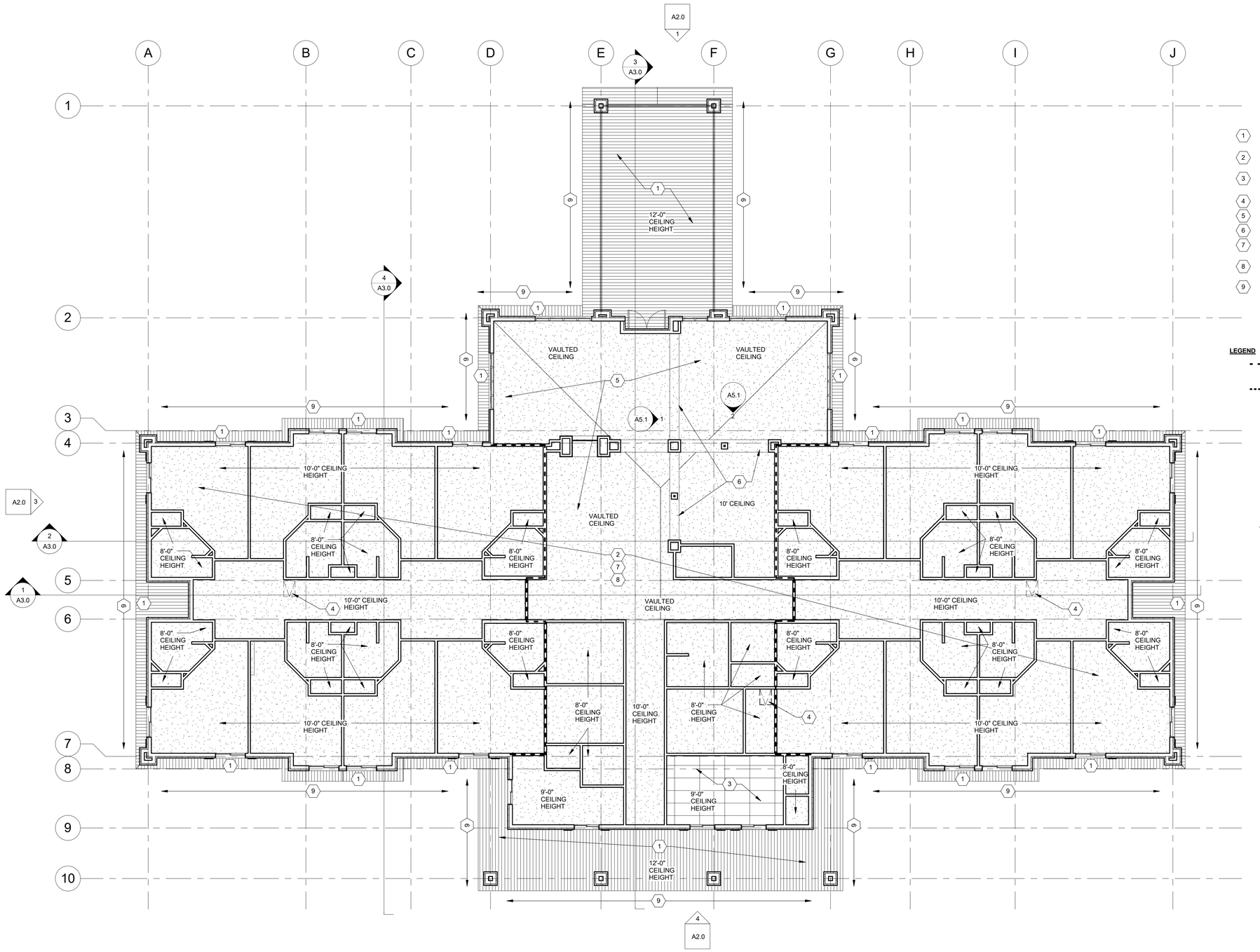

KEYED NOTES:

1. PREFINISHED METAL SOFFIT CEILING. SEE SCHEDULE.
2. TEXTURED & PAINTED GYPSUM BOARD CEILING. SEE SCHEDULE.
3. MOISTURE RESISTANT 2'x4' SUSPENDED VINYL LAY-IN CEILING TILE. SEE SCHEDULE.
4. ATTIC/MECHANICAL CATWALK ACCESS.
5. VAULTED CEILING.
6. FRAMED ARCHWAY SOFFIT CEILING.
7. SEE ELECTRICAL DRAWINGS FOR LIGHTING & ELECTRICAL EQUIPMENTS.
8. SEE MECHANICAL DRAWINGS FOR MECHANICAL DUCTING & EQUIPMENTS.
9. SEE ROOF PLAN FOR GUTTER & DOWNSPOUT LOCATION.

LEGEND

- - - - - - 1-HR. WALL: FULL HEIGHT WALL UP TO UNDERSIDE OF ROOF DECK W/ SOUND BATT INSULATION

- - - - - - - - SOUND/SMOKE WALL: WALL UP TO UNDERSIDE OF CEILING W/ SOUND BATT INSULATION

1 REFLECTED CEILING PLAN
SCALE: 1/8" = 1'-0"

ENSIGN
THE STANDARD IN ENGINEERING

SALT LAKE CITY
45 W. 10000 S., Suite 500
Sandy, UT 84070
Phone: 801.255.0529

LAYTON
Phone: 801.547.1100

TOOELE
Phone: 435.843.3590

CEDAR CITY
Phone: 435.865.1453

RICHFIELD
Phone: 435.590.0187

WWW.ENSIGNENG.COM

CLIENT INFORMATION:

CLIENT INFORMATION:

TENDER CARE HOSPICE ASSISTED LIVING FACILITY

5TH NORTH AND 1ST EAST STREET PRICE CITY, UTAH

STATE OF UTAH
STEVEN N. MARSH
22-11-12-0301
LICENSED ARCHITECT

PERMIT 03/08/16

NO.	DATE	REVISION

REFLECTED CEILING PLAN

PROJECT NUMBER
6803
DATE
12-31-15
DRAWN BY
R. MALIGON
PROJECT ENGINEER
A. HAWKINS
PROJECT MANAGER
C. DUNCAN

A1.1

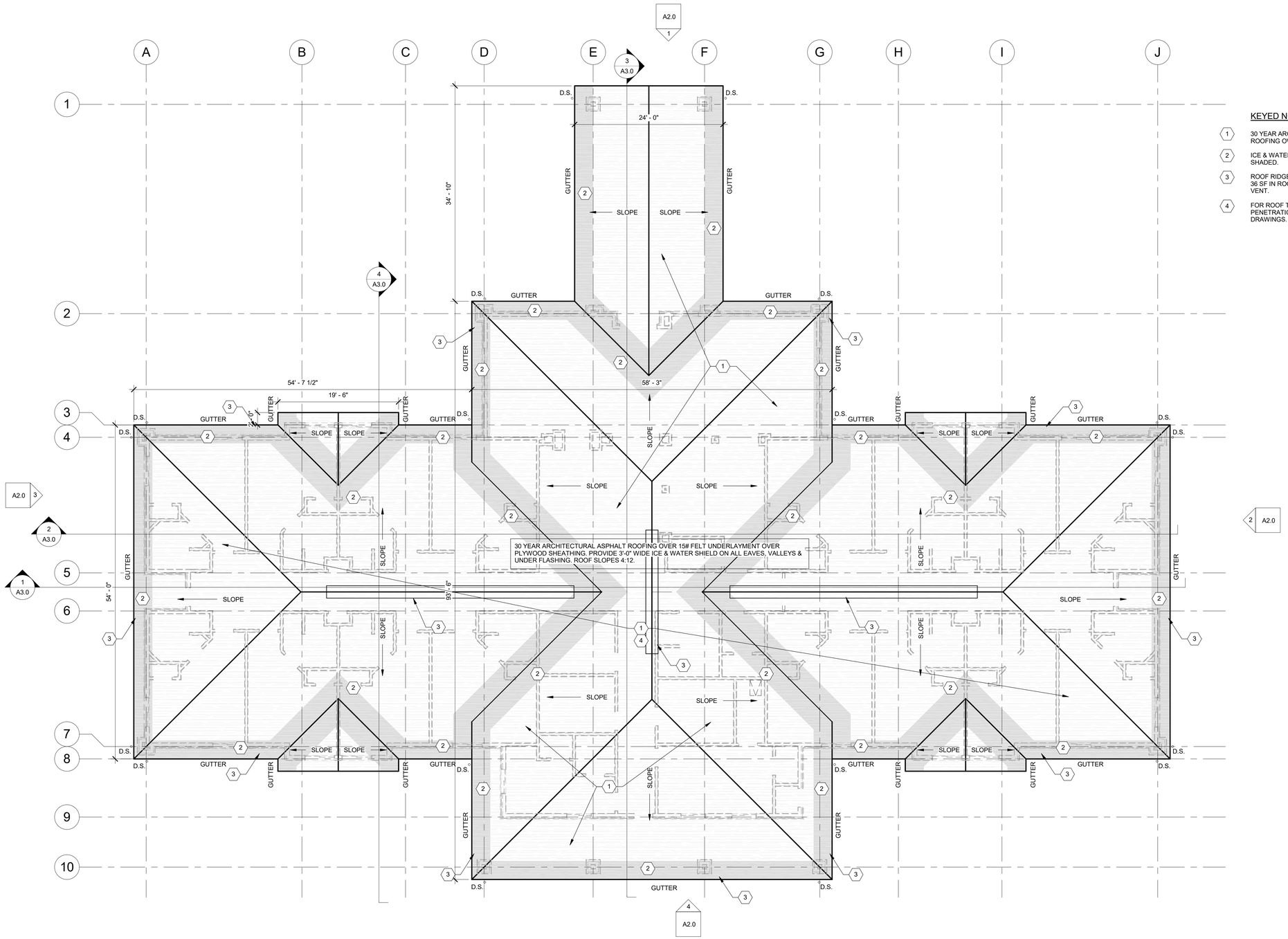

KEYED NOTES:

1. 30 YEAR ARCHITECTURAL ASPHALT SHINGLE ROOFING OVER 15# ROOFING FELT.
2. ICE & WATER SHIELD BARRIER SHOWN AS SHADED.
3. ROOF RIDGE VENT & SOFFIT VENT. PROVIDE 36 SF IN ROOF RIDGE VENT & 36 SF IN SOFFIT VENT.
4. FOR ROOF TOP MECHANICAL & PLUMBING PENETRATIONS, SEE MECH. & PLUMBING DRAWINGS.

1 ROOF PLAN
SCALE: 1/8" = 1'-0"

ENSIGN
THE STANDARD IN ENGINEERING

SALT LAKE CITY
45 W. 10000 S., Suite 500
Sandy, UT 84070
Phone: 801.255.0529

LAYTON
Phone: 801.547.1100

TOOELE
Phone: 435.843.3590

CEDAR CITY
Phone: 435.865.1453

RICHFIELD
Phone: 435.590.0187

WWW.ENSIGNENG.COM

CLIENT INFORMATION:

CLIENT INFORMATION:

TENDER CARE HOSPICE ASSISTED LIVING FACILITY

5TH NORTH AND 1ST EAST STREET PRICE CITY, UTAH

STATE OF UTAH
SHERMAN N. MARR
22-11-312-0301
LICENSED ARCHITECT

PERMIT 03/08/16

NO.	DATE	REVISION

ROOF PLAN

PROJECT NUMBER
6803
DATE
12-31-15
DRAWN BY
R. MALIGON
PROJECT ENGINEER
A. HAWKINS
PROJECT MANAGER
C. DUNCAN

A1.2

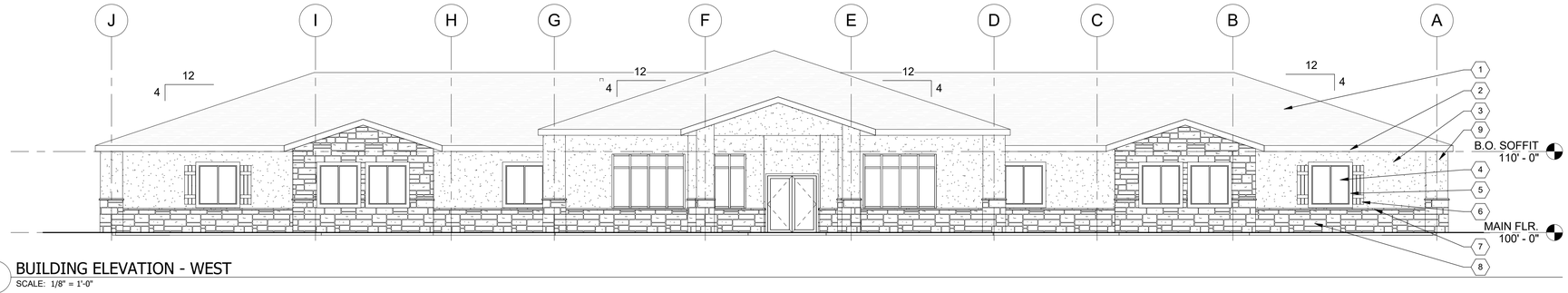

1 BUILDING ELEVATION - WEST
SCALE: 1/8" = 1'-0"

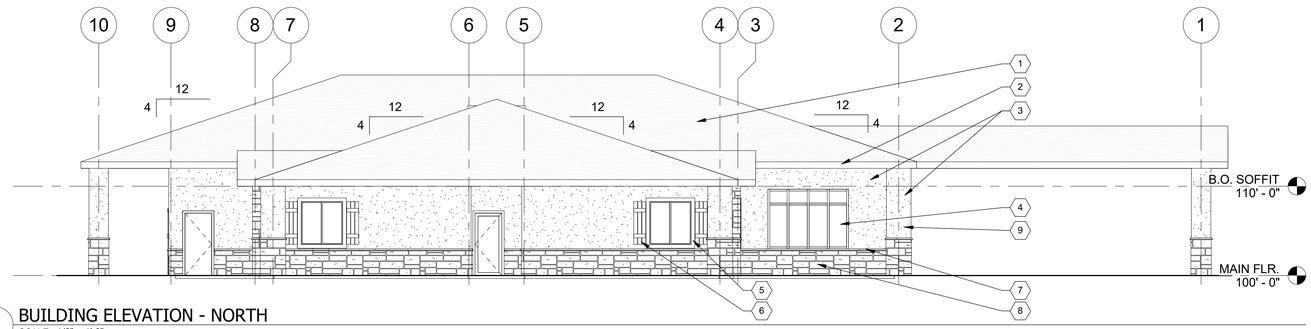

2 BUILDING ELEVATION - NORTH
SCALE: 1/8" = 1'-0"

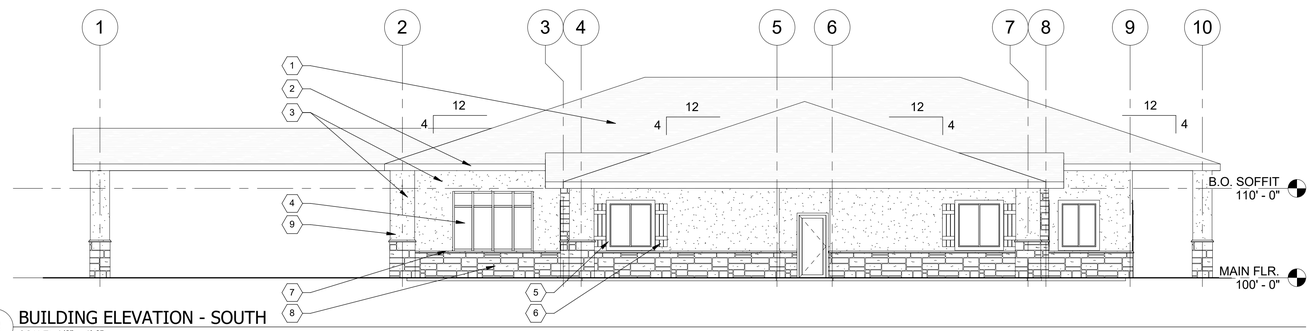

3 BUILDING ELEVATION - SOUTH
SCALE: 1/8" = 1'-0"

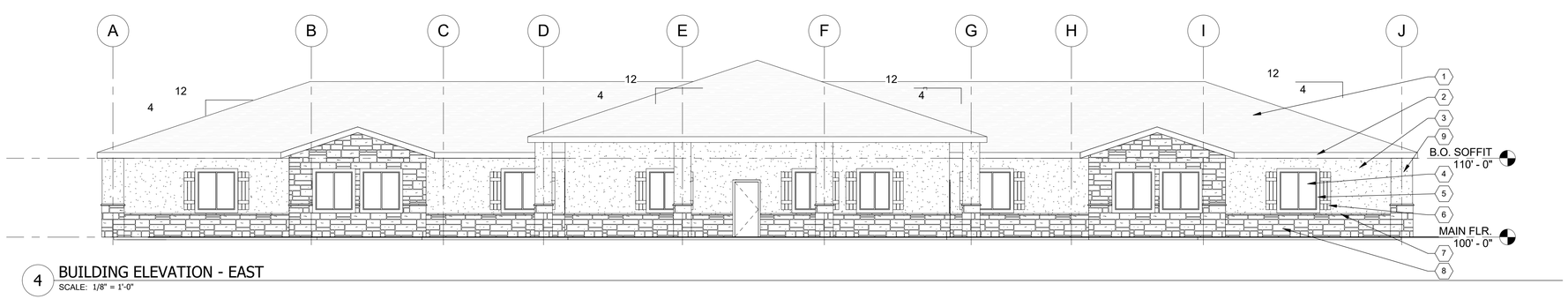

4 BUILDING ELEVATION - EAST
SCALE: 1/8" = 1'-0"

KEYED NOTES:

1. ASPHALT SHINGLE ROOFING. SEE ROOF PLAN.
2. PREFINISHED METAL FACIA, FLASHING, GUTTER, DOWNSPOUT & SOFFIT.
3. INTEGRAL COLORED EIFS FINISH WALL.
4. INSULATED LOW-E GLASS.
5. INTEGRAL COLORED EIFS FINISH WINDOW BANDING.
6. COMPOSITE WOOD DECORATIVE WINDOW SHUTTER.
7. CONCRETE PRECAST BULL NOSE TRANSITION MOULDING.
8. CULTURED STONE FINISH. COLOR & STYLE BY OWNER.
9. ACCENT COLOR EIFS.

ENSIGN
THE STANDARD IN ENGINEERING

SALT LAKE CITY
45 W. 10000 S., Suite 500
Sandy, UT 84070
Phone: 801.255.0529

LAYTON
Phone: 801.547.1100

TOOELE
Phone: 435.843.3590

CEDAR CITY
Phone: 435.865.1453

RICHFIELD
Phone: 435.590.0187

WWW.ENSIGNENG.COM

CLIENT INFORMATION:

CLIENT INFORMATION:

TENDER CARE HOSPICE ASSISTED LIVING FACILITY

5TH NORTH AND 1ST EAST STREET PRICE CITY, UTAH

PERMIT 03/08/16

NO.	DATE	REVISION

BUILDING ELEVATIONS

PROJECT NUMBER
6803
DATE
12-31-15
DRAWN BY
R. MALIGON
PROJECT ENGINEER
A. HAWKINS
PROJECT MANAGER
C. DUNCAN

A2.0

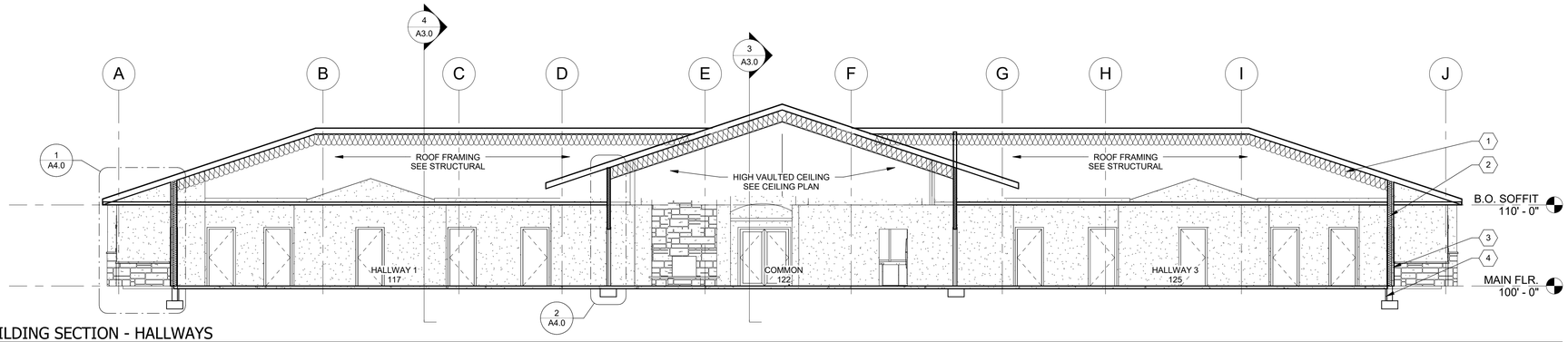

1 BUILDING SECTION - HALLWAYS
SCALE: 1/8" = 1'-0"

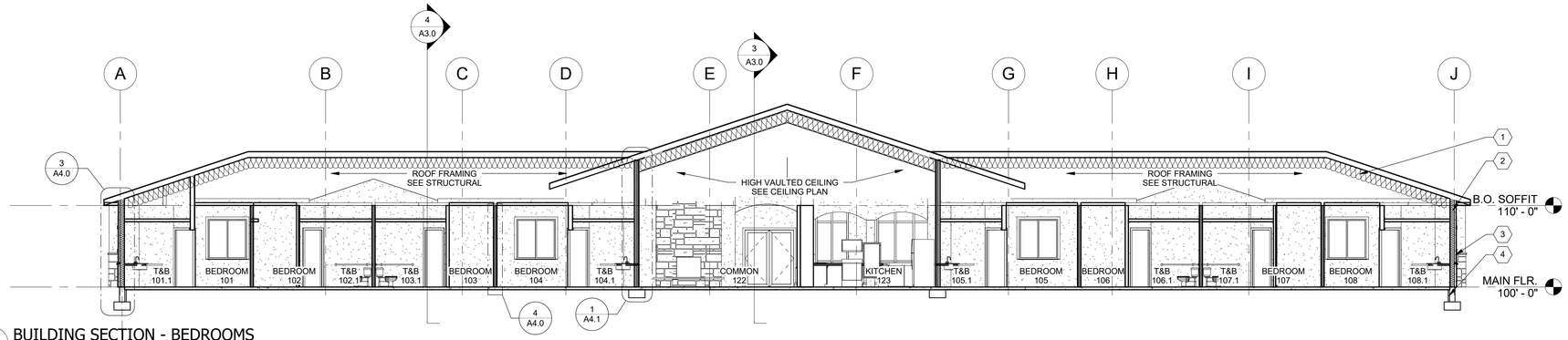

2 BUILDING SECTION - BEDROOMS
SCALE: 1/8" = 1'-0"

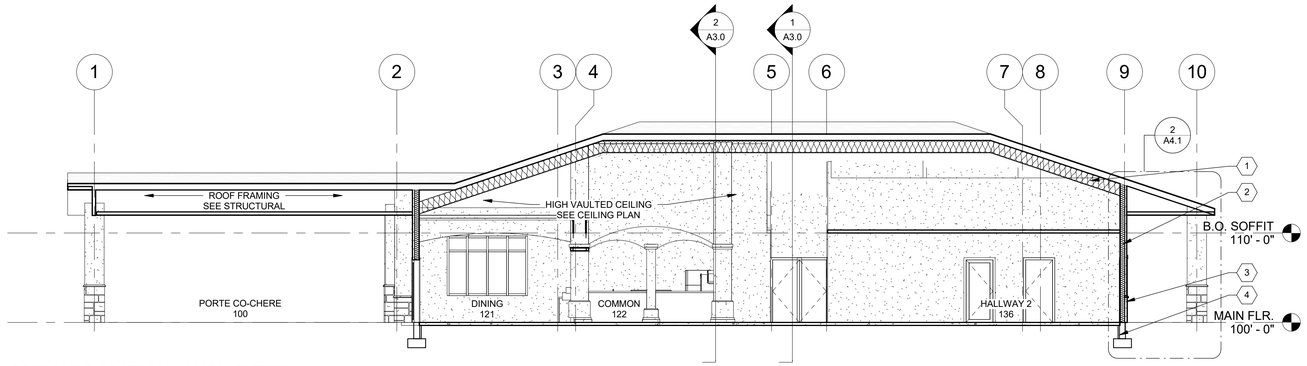

3 BUILDING SECTION - MAIN ENTRY
SCALE: 1/8" = 1'-0"

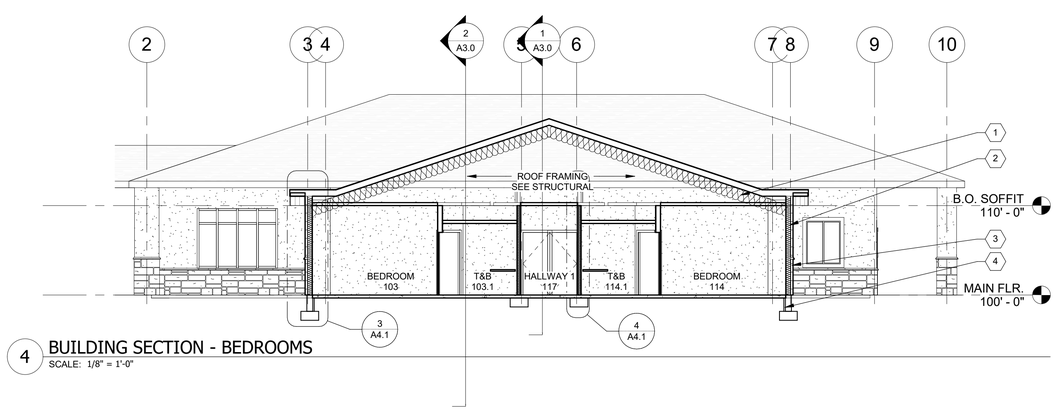

4 BUILDING SECTION - BEDROOMS
SCALE: 1/8" = 1'-0"

KEYED NOTES:

1. R-49 BATT OR BLOWN-IN ROOF/ATTIC INSULATION.
2. R-13 BATT WALL INSULATION.
3. R-3.8 CONTINUOUS RIGID WALL INSULATION.
4. R-10 CONTINUOUS RIGID FOUNDATION INSULATION.

ENSIGN
THE STANDARD IN ENGINEERING

SALT LAKE CITY
45 W. 10000 S., Suite 500
Sandy, UT 84070
Phone: 801.255.0529

LAYTON
Phone: 801.547.1100

TOOELE
Phone: 435.843.3590

CEDAR CITY
Phone: 435.865.1453

RICHFIELD
Phone: 435.590.0187

WWW.ENSIGNENG.COM

CLIENT INFORMATION:
CLIENT INFORMATION:

TENDER CARE HOSPICE ASSISTED LIVING FACILITY

5TH NORTH AND 1ST EAST STREET PRICE CITY, UTAH

PERMIT 03/08/16

NO.	DATE	REVISION

BUILDING SECTIONS

PROJECT NUMBER
6803
DATE
12-31-15
DRAWN BY
R. MALIGON
PROJECT ENGINEER
A. HAWKINS
PROJECT MANAGER
C. DUNCAN

A3.0

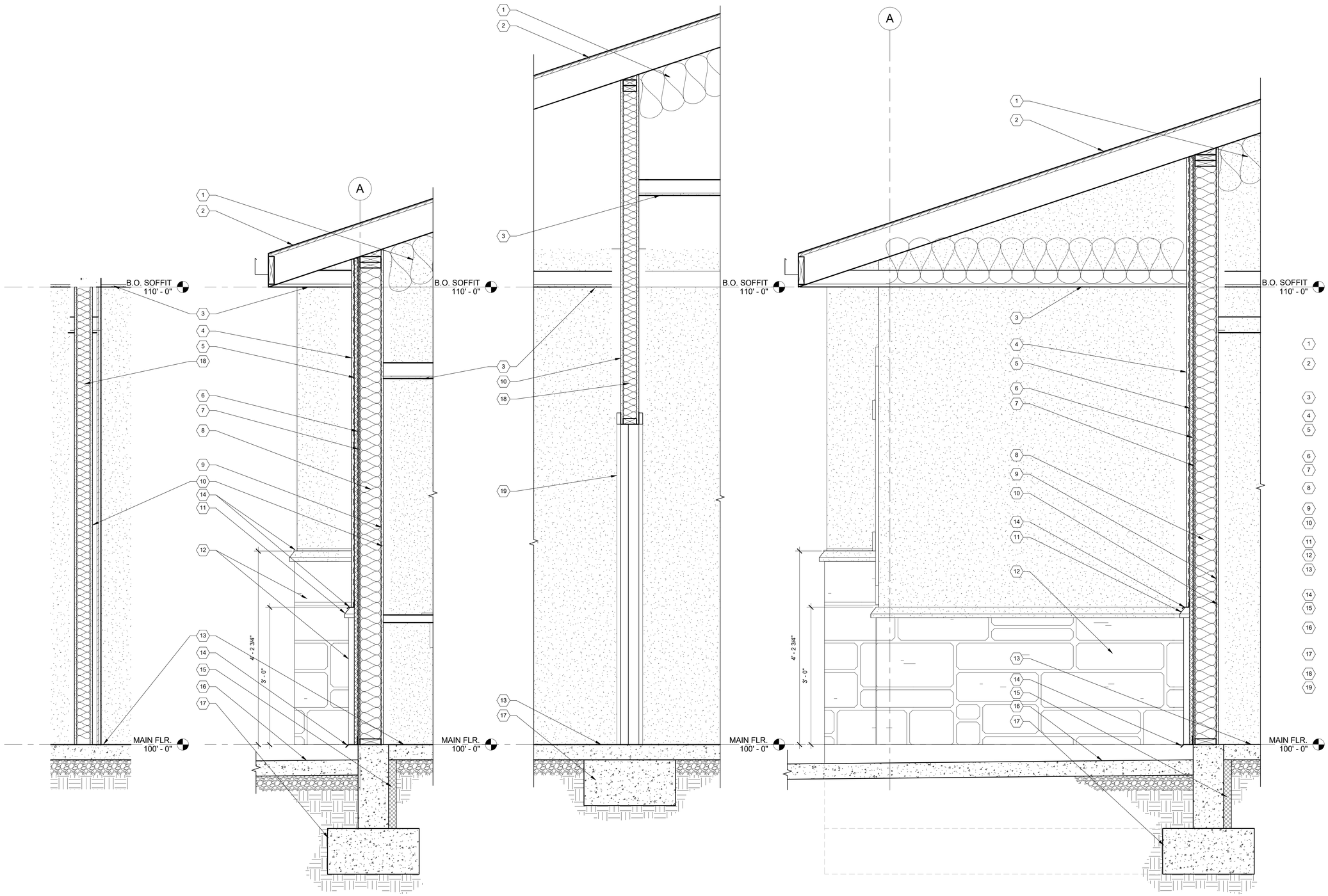

4 WALL SECTION
SCALE: 1" = 1'-0"

3 WALL SECTION
SCALE: 1" = 1'-0"

2 WALL SECTION
SCALE: 1" = 1'-0"

1 WALL SECTION
SCALE: 1" = 1'-0"

KEYED NOTES:

1. ROOFING/ATTIC INSULATION. SEE BUILDING SECTION.
2. ASPHALT SHINGLE ROOFING OVER ROOFING FELT OVER PLYWOOD SHEATHING. SEE ROOF PLAN & STRUCTURAL DRAWINGS.
3. SOFFIT/CEILING FINISH. SEE REFLECTED CEILING PLAN.
4. INTEGRAL COLORED EIFS.
5. CONTINUOUS EXTERIOR WALL RIGID INSULATION. SEE BUILDING SECTION.
6. AIR & WATER BARRIER.
7. PLYWOOD SHEATHING OVER WOOD STUD. SEE STRUCTURAL.
8. EXTERIOR WALL BATT INSULATION. SEE BUILDING SECTION.
9. MOISTURE BARRIER.
10. PAINTED GYPSUM BOARD INTERIOR FINISH.
11. PRECAST CONCRETE BULLNOSE.
12. CULTURED STONE.
13. INTERIOR SLAB, FLOOR & BASE FINISH. SEE FLOOR PLAN, SCHEDULES & STRUCTURAL.
14. PREFINISHED DRIP FLASHING.
15. FOUNDATION INSULATION. SEE BUILDING SECTION.
16. EXTERIOR SLAB/SIDEWALK, SLOPE 1/4" PER 1'-0", SEE CIVIL DRAWINGS.
17. FOOTING & FOUNDATION. SEE STRUCTURAL.
18. SOUND BATT INSULATION.
19. DOOR OR WINDOW. SEE SCHEDULE.

ENSIGN
THE STANDARD IN ENGINEERING

SALT LAKE CITY
45 W. 10000 S., Suite 500
Sandy, UT 84070
Phone: 801.255.0529

LAYTON
Phone: 801.547.1100

TOOELE
Phone: 435.843.3590

CEDAR CITY
Phone: 435.865.1453

RICHFIELD
Phone: 435.590.0187

WWW.ENSIGNENG.COM

CLIENT INFORMATION:

CLIENT INFORMATION:

TENDER CARE HOSPICE ASSISTED LIVING FACILITY

5TH NORTH AND 1ST EAST STREET PRICE CITY, UTAH

STATE OF UTAH
STEVEN N. MAGIGON
22-11-12-0301
LICENSED ARCHITECT

PERMIT 03/08/16

NO.	DATE	REVISION

WALL SECTIONS

PROJECT NUMBER
6803
DATE
12-31-15
DRAWN BY
R. MALIGON
PROJECT ENGINEER
A. HAWKINS
PROJECT MANAGER
C. DUNCAN

A4.0

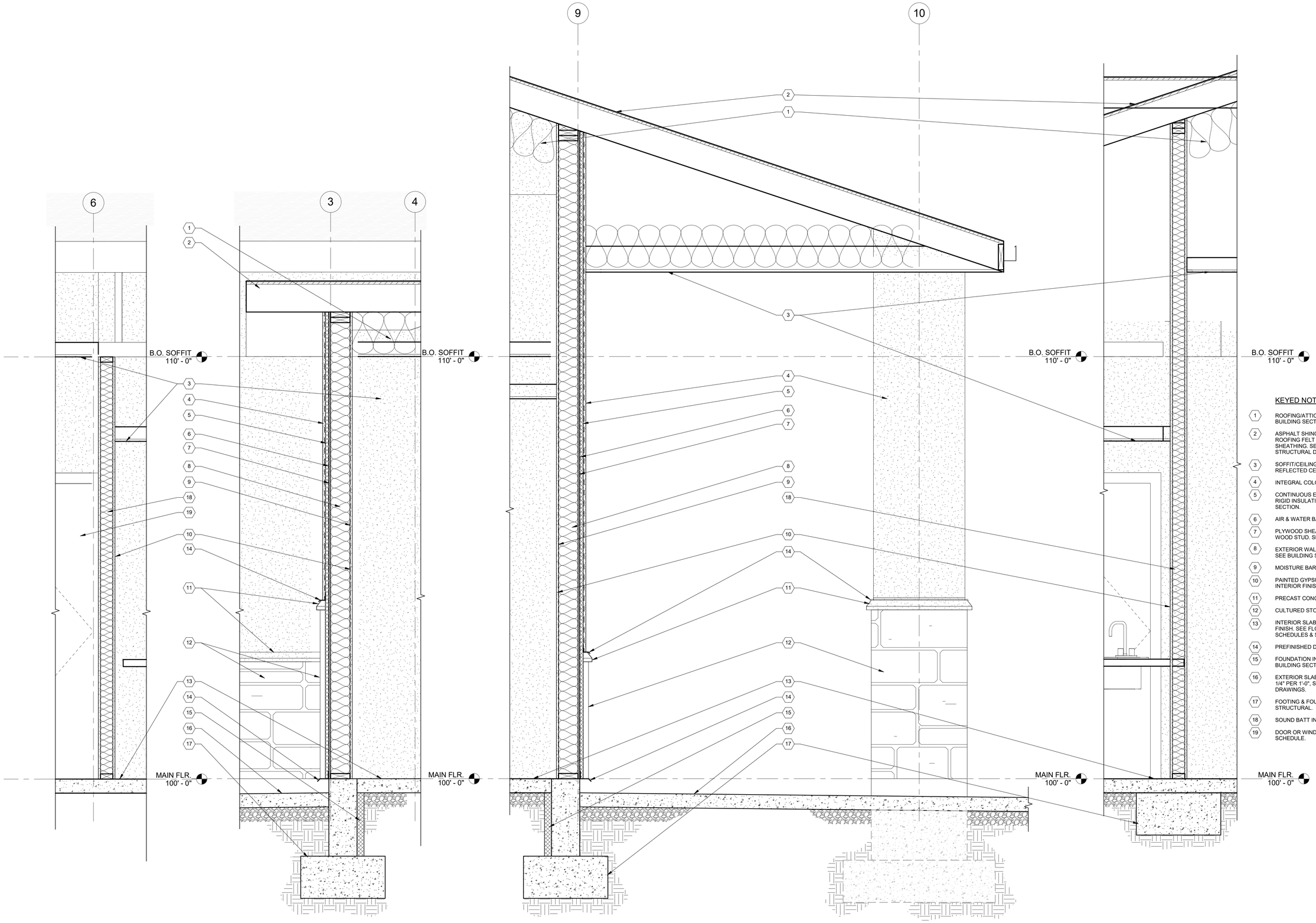

4 WALL SECTION
SCALE: 1" = 1'-0"

3 WALL SECTION
SCALE: 1" = 1'-0"

2 WALL SECTION
SCALE: 1" = 1'-0"

1 WALL SECTION
SCALE: 1" = 1'-0"

KEYED NOTES:

1. ROOFING/ATTIC INSULATION. SEE BUILDING SECTION.
2. ASPHALT SHINGLE ROOFING OVER ROOFING FELT OVER PLYWOOD SHEATHING. SEE ROOF PLAN & STRUCTURAL DRAWINGS.
3. SOFFIT/CEILING FINISH. SEE REFLECTED CEILING PLAN.
4. INTEGRAL COLORED EIFS.
5. CONTINUOUS EXTERIOR WALL RIGID INSULATION. SEE BUILDING SECTION.
6. AIR & WATER BARRIER.
7. PLYWOOD SHEATHING OVER WOOD STUD. SEE STRUCTURAL.
8. EXTERIOR WALL BATT INSULATION. SEE BUILDING SECTION.
9. MOISTURE BARRIER.
10. PAINTED GYPSUM BOARD INTERIOR FINISH.
11. PRECAST CONCRETE BULLNOSE.
12. CULTURED STONE.
13. INTERIOR SLAB, FLOOR & BASE FINISH. SEE FLOOR PLAN, SCHEDULES & STRUCTURAL.
14. PREFINISHED DRIP FLASHING.
15. FOUNDATION INSULATION. SEE BUILDING SECTION.
16. EXTERIOR SLAB/SIDEWALK, SLOPE 1/4" PER 1'-0", SEE CIVIL DRAWINGS.
17. FOOTING & FOUNDATION. SEE STRUCTURAL.
18. SOUND BATT INSULATION.
19. DOOR OR WINDOW. SEE SCHEDULE.

ENSIGN
THE STANDARD IN ENGINEERING

SALT LAKE CITY
45 W. 10000 S., Suite 500
Sandy, UT 84070
Phone: 801.255.0529

LAYTON
Phone: 801.547.1100

TOOELE
Phone: 435.843.3590

CEDAR CITY
Phone: 435.865.1453

RICHFIELD
Phone: 435.590.0187

WWW.ENSIGNENG.COM

CLIENT INFORMATION:

CLIENT INFORMATION:

TENDER CARE HOSPICE ASSISTED LIVING FACILITY

5TH NORTH AND 1ST EAST STREET PRICE CITY, UTAH

STATE OF UTAH
STEVEN N. WARP
22-17412-0301
LICENSED ARCHITECT

PERMIT 03/08/16

NO.	DATE	REVISION

WALL SECTIONS

PROJECT NUMBER
6803
DATE
12-31-15
DRAWN BY
R. MALIGON
PROJECT ENGINEER
A. HAWKINS
PROJECT MANAGER
C. DUNCAN

A4.1

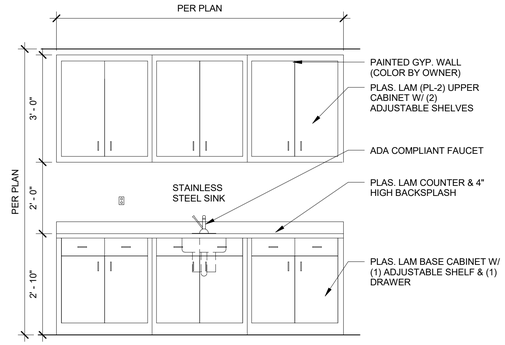

9 CABINET ELEVATION
SCALE: 1/2" = 1'-0"

NOTE:
SIGNS SHALL BE CENTERED ON DOORS AND BE DISTINCTLY DIFFERENT THAN DOORS IN COLOR AND CONTRAST.

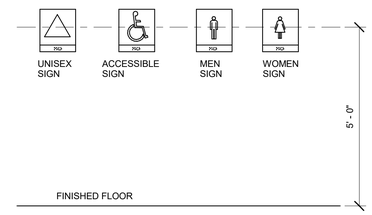

5 ADA SIGNS
SCALE: 1/2" = 1'-0"

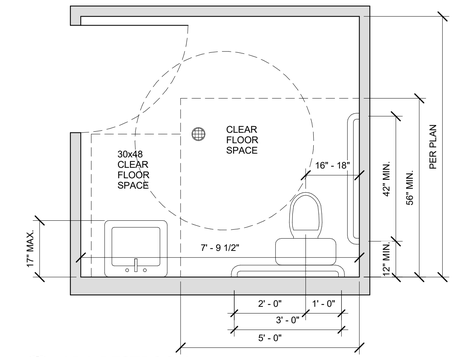

1 ADA RESTROOM
SCALE: 1/2" = 1'-0"

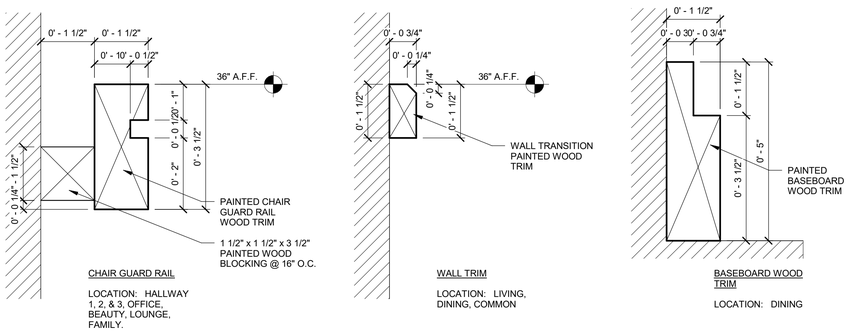

11 WOOD TRIM DETAILS
SCALE: 6" = 1'-0"

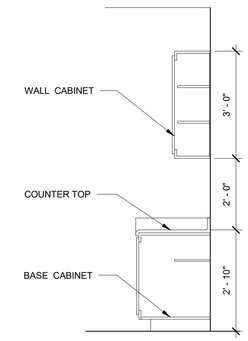

10 CABINET SECTION
SCALE: 1/2" = 1'-0"

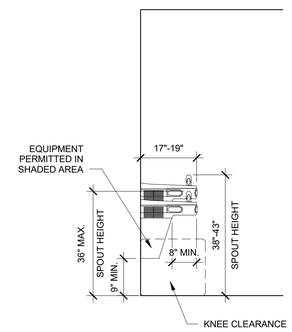

6 ADA WATER FOUNTAIN
SCALE: 1/2" = 1'-0"

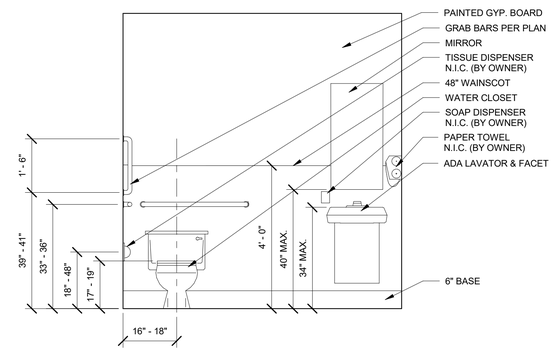

2 ADA RESTROOM ELEVATION
SCALE: 1/2" = 1'-0"

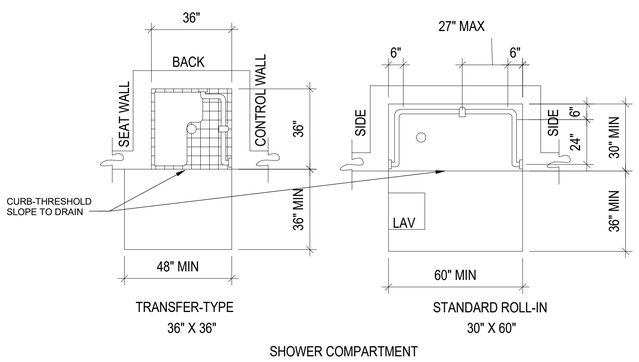

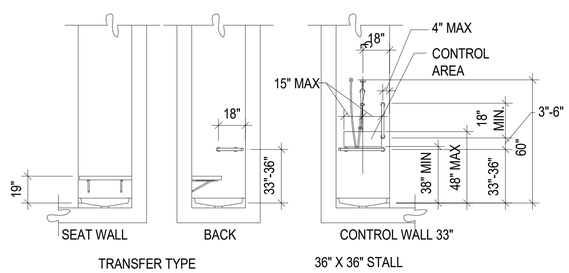

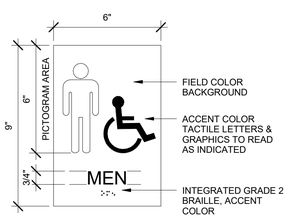

7 ACCESSIBLE MEN'S ROOM
SCALE: 3" = 1'-0"

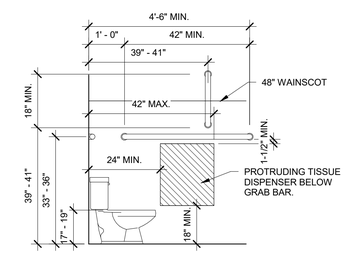

3 ADA RESTROOM SIDEWALL
SCALE: 1/2" = 1'-0"

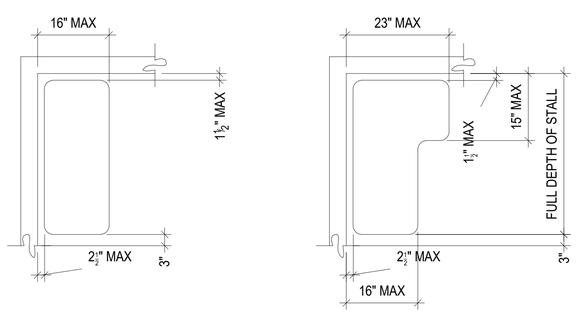

NOTE: EITHER TYPE ARE ACCEPTABLE

SHOWER SEAT DESIGN

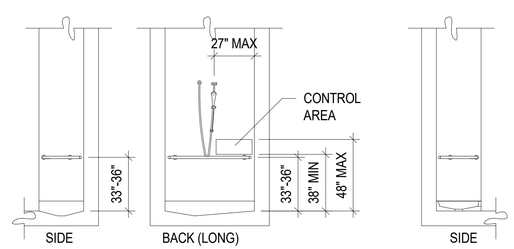

NOTE: SHOWER HEAD AND CONTROL AREA MAY BE ON BACK (LONG) WALL (AS SHOWN) OR ON EITHER SIDE WALL.

GRAB BARS AT SHOWER STALLS

30" X 60" STALL

STANDARD ROLL-IN

12 ADA SHOWER
SCALE: 3/4" = 1'-0"

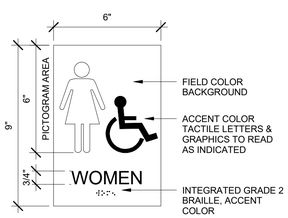

8 ACCESSIBLE WOMEN'S ROOM
SCALE: 3" = 1'-0"

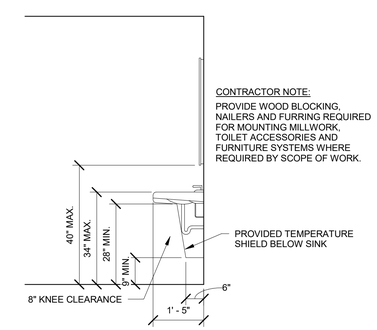

4 ADA SINK ELEV.
SCALE: 1/2" = 1'-0"

ENSIGN
THE STANDARD IN ENGINEERING

SALT LAKE CITY
45 W. 10000 S., Suite 500
Sandy, UT 84070
Phone: 801.255.0529

LAYTON
Phone: 801.547.1100

TOOELE
Phone: 435.843.3590

CEDAR CITY
Phone: 435.865.1453

RICHFIELD
Phone: 435.590.0187

WWW.ENSIGNENG.COM

CLIENT INFORMATION:

CLIENT INFORMATION:

TENDER CARE HOSPICE ASSISTED LIVING FACILITY

5TH NORTH AND 1ST EAST STREET PRICE CITY, UTAH

STATE OF UTAH
STEVEN N. MARR
22-11-1912-0301
LICENSED ARCHITECT

PERMIT 03/08/16

NO.	DATE	REVISION

DETAILS

PROJECT NUMBER
6803
DATE
12-31-15
DRAWN BY
R. MALIGON
PROJECT ENGINEER
A. HAWKINS
PROJECT MANAGER
C. DUNCAN

A5.0

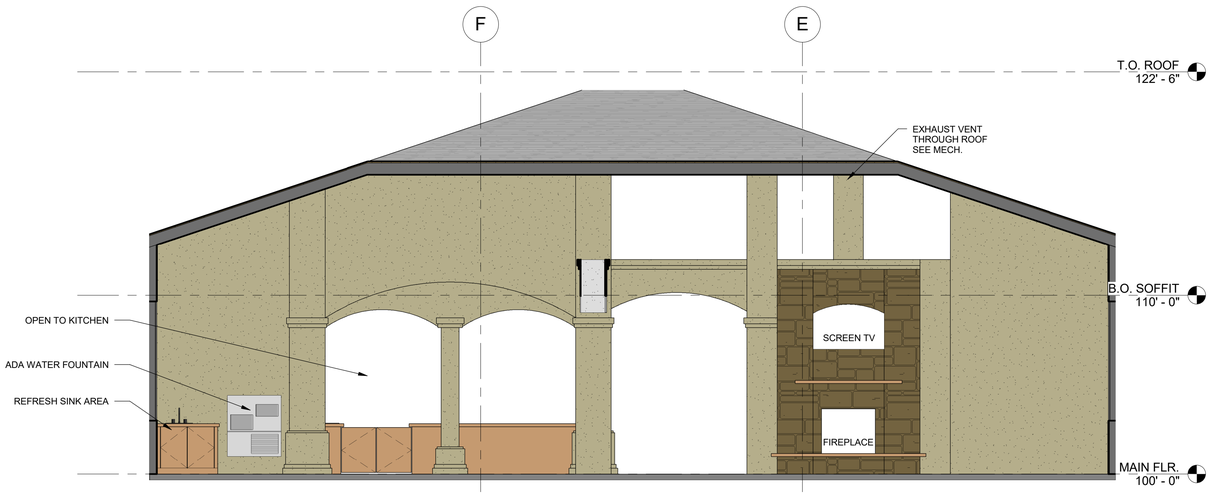

2 Elevation 2 - a
SCALE: 1/4" = 1'-0"

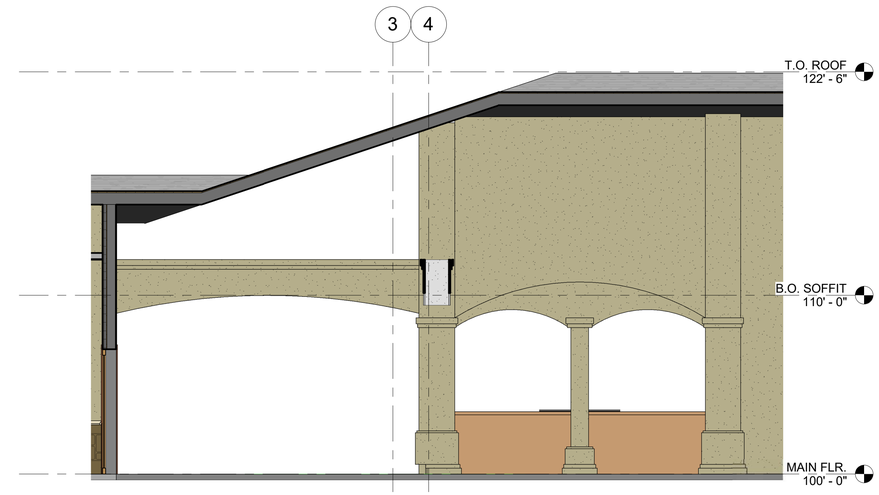

1 Elevation 1 - a
SCALE: 1/4" = 1'-0"

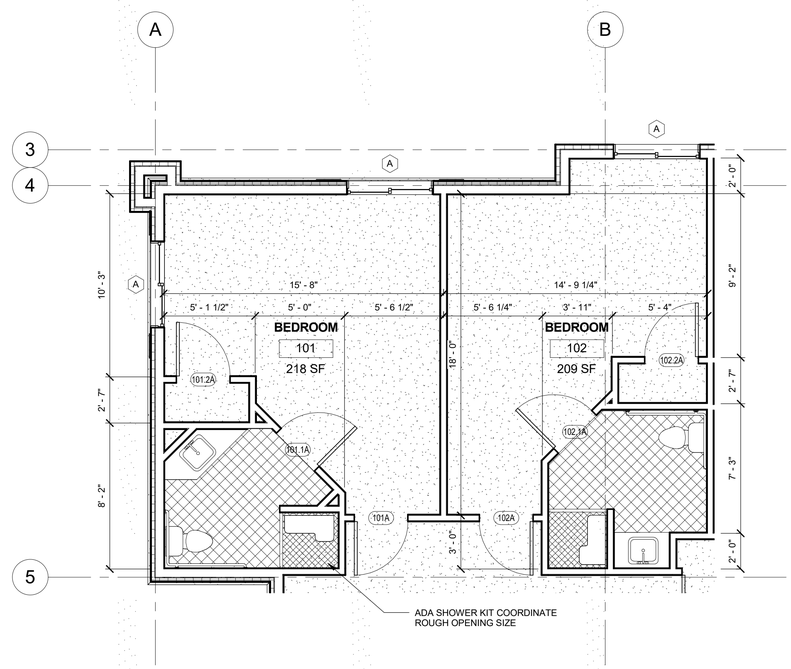

4 TYP. ROOM PLANS
SCALE: 1/4" = 1'-0"

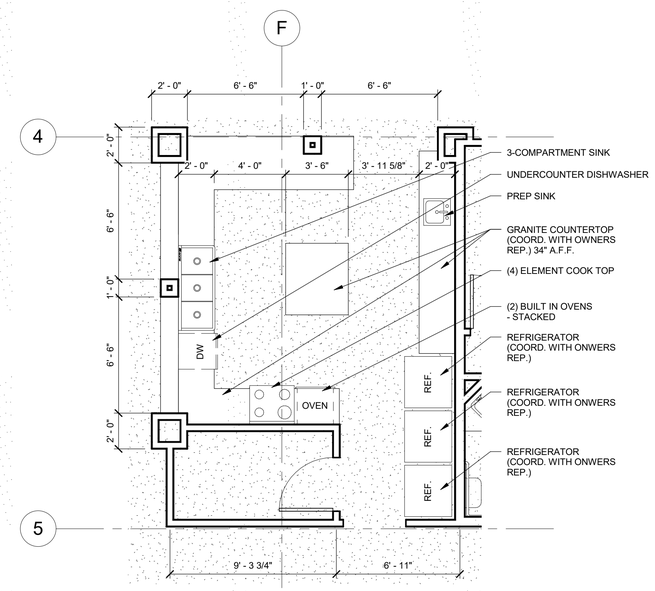

3 ENLARGED KITCHEN PLAN
SCALE: 1/4" = 1'-0"

ENSIGN
THE STANDARD IN ENGINEERING

SALT LAKE CITY
45 W. 10000 S., Suite 500
Sandy, UT 84070
Phone: 801.255.0529

LAYTON
Phone: 801.547.1100

TOOELE
Phone: 435.843.3590

CEDAR CITY
Phone: 435.865.1453

RICHFIELD
Phone: 435.590.0187

WWW.ENSIGNENG.COM

CLIENT INFORMATION:

CLIENT INFORMATION:

TENDER CARE HOSPICE
ASSISTED LIVING FACILITY

5TH NORTH AND 1ST EAST STREET
PRICE CITY, UTAH

PERMIT 03/08/16

NO.	DATE	REVISION

INTERIOR DETAILS

PROJECT NUMBER
6803
DATE
12-31-15
DRAWN BY
R. MALIGON
PROJECT ENGINEER
A. HAWKINS
PROJECT MANAGER
C. DUNCAN

A5.1

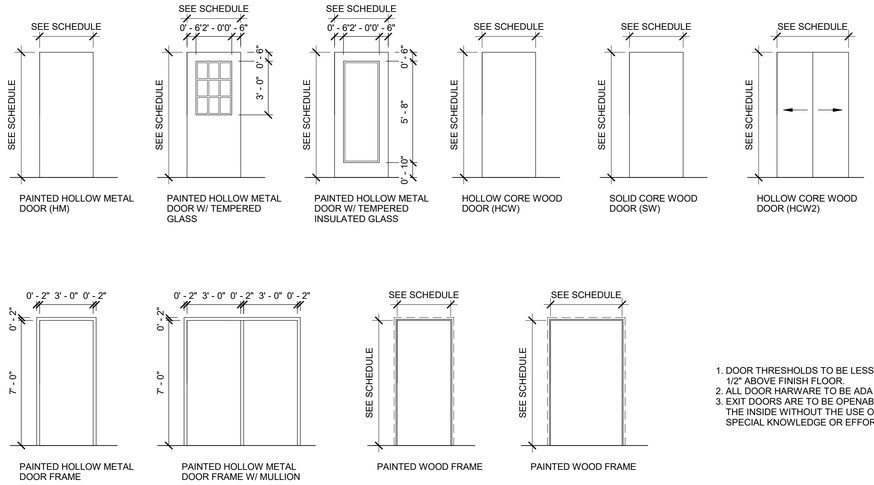

1. DOOR THRESHOLDS TO BE LESS THAN 1/2" ABOVE FINISH FLOOR.
2. ALL DOOR HARWARE TO BE ADA LEVER TYPE.
3. EXIT DOORS ARE TO BE OPENABLE FROM THE INSIDE WITHOUT THE USE OF A KEY, SPECIAL KNOWLEDGE OR EFFORT.

1 DOOR & FRAME ELEVATION
SCALE: N.T.S.

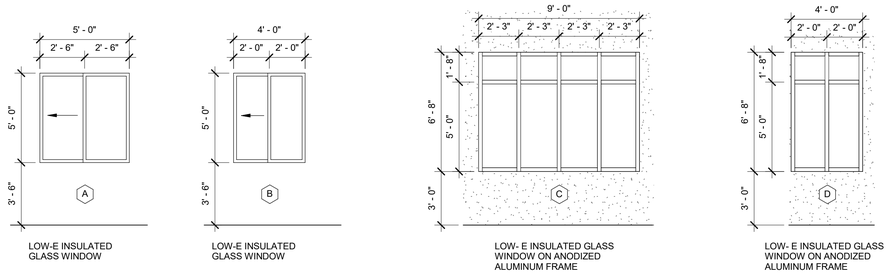

2 WINDOW ELEVATION
SCALE: N.T.S.

DOOR SCHEDULE

MARK	WIDTH	HEIGHT	DOOR TYPE	DOOR FINISH	FRAME TYPE	FRAME FINISH	FIRE RATING	HARDWARE	COMMENTS
101.1A	3' - 0"	7' - 0"	HCW	PAINT	WOOD W/ CASING	PAINT		4	
101.2A	3' - 0"	7' - 0"	HCW	PAINT	WOOD W/ CASING	PAINT		8	
101A	3' - 0"	7' - 0"	HCW	PAINT	WOOD W/ CASING	PAINT	1 HR.	8	CLOSER
102.1A	3' - 0"	7' - 0"	HCW	PAINT	WOOD W/ CASING	PAINT		4	
102.2A	3' - 0"	7' - 0"	HCW	PAINT	WOOD W/ CASING	PAINT		8	
102A	3' - 0"	7' - 0"	HCW	PAINT	WOOD W/ CASING	PAINT	1 HR.	8	CLOSER
103.1A	3' - 0"	7' - 0"	HCW	PAINT	WOOD W/ CASING	PAINT		4	
103.2A	3' - 0"	7' - 0"	HCW	PAINT	WOOD W/ CASING	PAINT		8	
103A	3' - 0"	7' - 0"	HCW	PAINT	WOOD W/ CASING	PAINT	1 HR.	8	CLOSER
104.1A	3' - 0"	7' - 0"	HCW	PAINT	WOOD W/ CASING	PAINT		4	
104.2A	3' - 0"	7' - 0"	HCW	PAINT	WOOD W/ CASING	PAINT		8	
104A	3' - 0"	7' - 0"	HCW	PAINT	WOOD W/ CASING	PAINT	1 HR.	8	CLOSER
105.1A	3' - 0"	7' - 0"	HCW	PAINT	WOOD W/ CASING	PAINT		4	
105.2A	3' - 0"	7' - 0"	HCW	PAINT	WOOD W/ CASING	PAINT		8	
105A	3' - 0"	7' - 0"	HCW	PAINT	WOOD W/ CASING	PAINT	1 HR.	8	CLOSER
106.1A	3' - 0"	7' - 0"	HCW	PAINT	WOOD W/ CASING	PAINT		4	
106.2A	3' - 0"	7' - 0"	HCW	PAINT	WOOD W/ CASING	PAINT		8	
106A	3' - 0"	7' - 0"	HCW	PAINT	WOOD W/ CASING	PAINT	1 HR.	8	CLOSER
107.1A	3' - 0"	7' - 0"	HCW	PAINT	WOOD W/ CASING	PAINT		4	
107.2A	3' - 0"	7' - 0"	HCW	PAINT	WOOD W/ CASING	PAINT		8	
107A	3' - 0"	7' - 0"	HCW	PAINT	WOOD W/ CASING	PAINT	1 HR.	8	CLOSER
108.1A	3' - 0"	7' - 0"	HCW	PAINT	WOOD W/ CASING	PAINT		4	
108.2A	3' - 0"	7' - 0"	HCW	PAINT	WOOD W/ CASING	PAINT		8	
108A	3' - 0"	7' - 0"	HCW	PAINT	WOOD W/ CASING	PAINT	1 HR.	8	CLOSER
109.1A	3' - 0"	7' - 0"	HCW	PAINT	WOOD W/ CASING	PAINT		4	
109.2A	3' - 0"	7' - 0"	HCW	PAINT	WOOD W/ CASING	PAINT		8	
109A	3' - 0"	7' - 0"	HCW	PAINT	WOOD W/ CASING	PAINT	1 HR.	8	CLOSER
110.1A	3' - 0"	7' - 0"	HCW	PAINT	WOOD W/ CASING	PAINT		4	
110.2A	3' - 0"	7' - 0"	HCW	PAINT	WOOD W/ CASING	PAINT		8	
110A	3' - 0"	7' - 0"	HCW	PAINT	WOOD W/ CASING	PAINT	1 HR.	8	CLOSER
111.1A	3' - 0"	7' - 0"	HCW	PAINT	WOOD W/ CASING	PAINT		4	
111.2A	3' - 0"	7' - 0"	HCW	PAINT	WOOD W/ CASING	PAINT		8	
111A	3' - 0"	7' - 0"	HCW	PAINT	WOOD W/ CASING	PAINT	1 HR.	8	CLOSER
112.1A	3' - 0"	7' - 0"	HCW	PAINT	WOOD W/ CASING	PAINT		4	
112.2A	3' - 0"	7' - 0"	HCW	PAINT	WOOD W/ CASING	PAINT		8	
112A	3' - 0"	7' - 0"	HCW	PAINT	WOOD W/ CASING	PAINT	1 HR.	8	CLOSER
113.1A	3' - 0"	7' - 0"	HCW	PAINT	WOOD W/ CASING	PAINT		4	
113.2A	3' - 0"	7' - 0"	HCW	PAINT	WOOD W/ CASING	PAINT		8	
113A	3' - 0"	7' - 0"	HCW	PAINT	WOOD W/ CASING	PAINT	1 HR.	8	CLOSER
114.1A	3' - 0"	7' - 0"	HCW	PAINT	WOOD W/ CASING	PAINT		4	
114.2A	3' - 0"	7' - 0"	HCW	PAINT	WOOD W/ CASING	PAINT		8	
114A	3' - 0"	7' - 0"	HCW	PAINT	WOOD W/ CASING	PAINT	1 HR.	8	CLOSER
115.1A	3' - 0"	7' - 0"	HCW	PAINT	WOOD W/ CASING	PAINT		4	
115.2A	3' - 0"	7' - 0"	HCW	PAINT	WOOD W/ CASING	PAINT		8	
115A	3' - 0"	7' - 0"	HCW	PAINT	WOOD W/ CASING	PAINT	1 HR.	8	CLOSER
116.1A	3' - 0"	7' - 0"	HCW	PAINT	WOOD W/ CASING	PAINT		4	
116.2A	3' - 0"	7' - 0"	HCW	PAINT	WOOD W/ CASING	PAINT		8	
116A	3' - 0"	7' - 0"	HCW	PAINT	WOOD W/ CASING	PAINT	1 HR.	8	CLOSER
117A	3' - 0"	7' - 0"	HM	PAINT	HM	PAINT		2	INSULATED DOOR W/ TEMPERED GLASS
117B	3' - 0"	7' - 0"	SW	PAINT	WOOD W/ CASING	PAINT	1 HR.	3	FIRE DOOR ON MAGNETIC LOCK
117C	3' - 0"	7' - 0"	SW	PAINT	WOOD W/ CASING	PAINT	1 HR.	3	FIRE DOOR ON MAGNETIC LOCK
118A	3' - 0"	7' - 0"	HCW	PAINT	WOOD W/ CASING	PAINT		4	
119A	3' - 0"	7' - 0"	HCW	PAINT	WOOD W/ CASING	PAINT		4	
120A	6' - 0"	7' - 0"	HM	PAINT	HM	PAINT		1	INSULATED DOOR W/ TEMPERED GLASS
124A	3' - 0"	7' - 0"	HCW	PAINT	WOOD W/ CASING	PAINT		8	
125A	3' - 0"	7' - 0"	HM	PAINT	HM	PAINT		2	INSULATED DOOR W/ TEMPERED GLASS
125B	3' - 0"	7' - 0"	SW	PAINT	WOOD W/ CASING	PAINT	1 HR.	3	FIRE DOOR ON MAGNETIC LOCK
125C	3' - 0"	7' - 0"	SW	PAINT	WOOD W/ CASING	PAINT	1 HR.	3	FIRE DOOR ON MAGNETIC LOCK
126A	3' - 0"	7' - 0"	HCW	PAINT	WOOD W/ CASING	PAINT		4	
127A	3' - 0"	7' - 0"	HCW	PAINT	WOOD W/ CASING	PAINT		4	
128A	3' - 0"	7' - 0"	HM	PAINT	HM	PAINT	1 HR.	7	
129A	3' - 0"	7' - 0"	HCW	PAINT	WOOD W/ CASING	PAINT		7	
130A	3' - 0"	7' - 0"	HM	PAINT	HM	PAINT		7	
131A	3' - 0"	7' - 0"	HM	PAINT	HM	PAINT		7	
132A	3' - 0"	7' - 0"	HM	PAINT	HM	PAINT		10	INSULATED DOOR
133A	3' - 0"	7' - 0"	SW	PAINT	WOOD W/ CASING	PAINT	1 HR.	5	
134A	3' - 0"	7' - 0"	SW	PAINT	WOOD W/ CASING	PAINT		6	DOOR W/ TEMPERED GLASS
135A	3' - 0"	7' - 0"	SW	PAINT	WOOD W/ CASING	PAINT		6	
136A	3' - 0"	7' - 0"	HM	PAINT	HM	PAINT		2	INSULATED DOOR
137A	3' - 0"	7' - 0"	SW	PAINT	WOOD W/ CASING	PAINT		5	
138A	3' - 0"	7' - 0"	SW	PAINT	WOOD W/ CASING	PAINT		5	DOOR W/ TEMPERED GLASS
139A	3' - 0"	7' - 0"	HCW	PAINT	WOOD W/ CASING	PAINT		6	
140A	3' - 0"	7' - 0"	HCW	PAINT	WOOD W/ CASING	PAINT		8	
141A	3' - 0"	7' - 0"	SW	PAINT	WOOD W/ CASING	PAINT		5	

DOOR HARDWARE REQUIREMENT:

(COORDINATE W/ OWNER FOR KEYING & DOOR SPECIFIC FUNCTION)

GROUP 1	GROUP 2	GROUP 3	GROUP 4	GROUP 5	GROUP 6	GROUP 7	GROUP 8	GROUP 9	GROUP 10
DOOR NOS.: 120A LOCATION: LIVING 2 CONTINUOUS HINGE 1 MORTISE LOCK 2 RIM/MORTISE CYLINDER 1 MULLION 1 MULLION MOUNTING KIT 1 MULLION STABILIZER 1 ELECTRIC STRIKE 1 CONCEALED OVERHEAD STOP 1 DOOR CLOSER 1 DOOR OPERATOR 1 THRESHOLD 1 WEATHERSEAL 1 MULLION SEAL 2 SWEEP 1 CARD READER 2 ACTUATOR 1 LOW VOLTAGE POWER	DOOR NOS.: 117A, 125A, 136A LOCATION: HALLWAY 1 - 3 1 CONTINUOUS HINGE 1 MORTISE LOCK 1 RIM/MORTISE CYLINDER 1 ELECTRIC STRIKE 1 DOOR CLOSER 1 KICK PLATE 1 THRESHOLD 1 WEATHERSEAL 1 SWEEP 1 CARD READER 1 LOW VOLTAGE POWER	DOOR NOS.: 117B, 117C, 125B, 125C LOCATION: HALLWAY 1 & 3 3 HINGE 1 DOUBLE DOOR MORTISE LOCK 1 DOUBLE DOOR RIM/MORTISE CYLINDER 1 DOOR CLOSER 1 DOOR STOP	DOOR NOS.: 118A, 119A, 126A, 101.1A - 116.1A, 127A LOCATION: LINEN CLOSETS, T&B 3 HINGE 1 MORTISE LOCK 1 RIM/MORTISE CYLINDER	DOOR NOS.: 133A, 137A, 138A, 141A, LOCATION: OFFICE, BEAUTY, LOUNGE, LAUNDRY 3 HINGE 1 MORTISE LOCK 1 RIM/MORTISE CYLINDER 1 DOOR CLOSER 1 DOOR STOP	DOOR NOS.: 134A, 135A, 139A LOCATION: FAMILY, COMMON BATH, TOILET 3 HINGE 1 MORTISE LOCK 1 RIM/MORTISE CYLINDER 1 DOOR CLOSER	DOOR NOS.: 128A, 129A, 130A, 131A LOCATION: MECH., STO., ELEC., MECH. 3 HINGE 1 MORTISE LOCK 1 RIM/MORTISE CYLINDER 1 WEATHERSEAL	DOOR NOS.: 101A - 116A, 101.2A - 116.2A, 124A, 140A LOCATION: BEDROOMS, CLOSETS, PANTRY, STO. 3 HINGE 1 MORTISE LOCK 1 RIM/MORTISE CYLINDER 1 DOOR STOP	DOOR NOS.: 101.3A, 108.3A, 109.3A, 116.3A LOCATION: CLOSETS 1 HEAVY-DUTY SLIDING HARDWARE SYSTEM & HANGERS (2-DOOR SLIDING BYPASS) 1 FLUSH MOUNT RING 1 FLOOR GUIDE	DOOR NOS.: 139A LOCATION: RISER 3 HINGE 1 MORTISE LOCK 1 RIM/MORTISE CYLINDER 1 WEATHERSEAL 1 SWEEP

ENSIGN
THE STANDARD IN ENGINEERING

SALT LAKE CITY
45 W. 10000 S., Suite 500
Sandy, UT 84070
Phone: 801.255.0529

LAYTON
Phone: 801.547.1100

TOOELE
Phone: 435.843.3590

CEDAR CITY
Phone: 435.865.1453

RICHFIELD
Phone: 435.590.0187

WWW.ENSIGNENG.COM

CLIENT INFORMATION:

CLIENT INFORMATION:

TENDER CARE HOSPICE ASSISTED LIVING FACILITY

5TH NORTH AND 1ST EAST STREET PRICE CITY, UTAH

PERMIT 03/08/16

NO.	DATE	REVISION

SCHEDULES

PROJECT NUMBER
6803
DATE
12-31-15
DRAWN BY
R. MALIGON
PROJECT ENGINEER
A. HAWKINS
PROJECT MANAGER
C. DUNCAN

A6.0

ROOM FINISH SCHEDULE

NUMBER	NAME	FLOOR FINISH	BASE FINISH	WALL FINISHES				CEILINGS		COMMENTS
				NORTH	EAST	SOUTH	WEST	HEIGHTS	FINISH	
100	PORTE CO-CHERE	CONC. DRIVEWAY	-	-	-	-	-	12' - 0"	PREFINISHED METAL SOFFIT	VAULTED CEILING
101	BEDROOM	CARPET	CARPET	GYP.- PAINTED	GYP.- PAINTED	GYP.- PAINTED	GYP.- PAINTED	10' - 0"	GYP.- TEXTURED, PAINTED	
101.1	T&B	SHEET VINYL	FLASH COVE VINYL W/ ALUM. CAP STRIP	GYP.- PAINTED	GYP.- PAINTED	GYP.- PAINTED	GYP.- PAINTED	8' - 0"	GYP.- TEXTURED, PAINTED	
101.1.1	SHO.	-	-	-	-	-	-	8' - 0"	GYP.- TEXTURED, PAINTED	ADA SHOWER STALL- ONE PIECE BUILT-IN FIBER GLASS
101.2	CLO.	CARPET	CARPET	GYP.- PAINTED	GYP.- PAINTED	GYP.- PAINTED	GYP.- PAINTED	8' - 0"	GYP.- TEXTURED, PAINTED	
102	BEDROOM	CARPET	CARPET	GYP.- PAINTED	GYP.- PAINTED	GYP.- PAINTED	GYP.- PAINTED	10' - 0"	GYP.- TEXTURED, PAINTED	
102.1	T&B	SHEET VINYL	FLASH COVE VINYL W/ ALUM. CAP STRIP	GYP.- PAINTED	GYP.- PAINTED	GYP.- PAINTED	GYP.- PAINTED	8' - 0"	GYP.- TEXTURED, PAINTED	
102.1.1	SHO.	-	-	-	-	-	-	8' - 0"	GYP.- TEXTURED, PAINTED	ADA SHOWER STALL- ONE PIECE BUILT-IN FIBER GLASS
102.2	CLO.	CARPET	CARPET	GYP.- PAINTED	GYP.- PAINTED	GYP.- PAINTED	GYP.- PAINTED	8' - 0"	GYP.- TEXTURED, PAINTED	
103	BEDROOM	CARPET	CARPET	GYP.- PAINTED	GYP.- PAINTED	GYP.- PAINTED	GYP.- PAINTED	10' - 0"	GYP.- TEXTURED, PAINTED	
103.1	T&B	SHEET VINYL	FLASH COVE VINYL W/ ALUM. CAP STRIP	GYP.- PAINTED	GYP.- PAINTED	GYP.- PAINTED	GYP.- PAINTED	8' - 0"	GYP.- TEXTURED, PAINTED	
103.1.1	SHO.	-	-	-	-	-	-	8' - 0"	GYP.- TEXTURED, PAINTED	ADA SHOWER STALL- ONE PIECE BUILT-IN FIBER GLASS
103.2	CLO.	CARPET	CARPET	GYP.- PAINTED	GYP.- PAINTED	GYP.- PAINTED	GYP.- PAINTED	8' - 0"	GYP.- TEXTURED, PAINTED	
104	BEDROOM	CARPET	CARPET	GYP.- PAINTED	GYP.- PAINTED	GYP.- PAINTED	GYP.- PAINTED	10' - 0"	GYP.- TEXTURED, PAINTED	
104.1	T&B	SHEET VINYL	FLASH COVE VINYL W/ ALUM. CAP STRIP	GYP.- PAINTED	GYP.- PAINTED	GYP.- PAINTED	GYP.- PAINTED	8' - 0"	GYP.- TEXTURED, PAINTED	
104.1.1	SHO.	-	-	-	-	-	-	8' - 0"	GYP.- TEXTURED, PAINTED	ADA SHOWER STALL- ONE PIECE BUILT-IN FIBER GLASS
104.2	CLO.	CARPET	CARPET	GYP.- PAINTED	GYP.- PAINTED	GYP.- PAINTED	GYP.- PAINTED	8' - 0"	GYP.- TEXTURED, PAINTED	
105	BEDROOM	CARPET	CARPET	GYP.- PAINTED	GYP.- PAINTED	GYP.- PAINTED	GYP.- PAINTED	10' - 0"	GYP.- TEXTURED, PAINTED	
105.1	T&B	SHEET VINYL	FLASH COVE VINYL W/ ALUM. CAP STRIP	GYP.- PAINTED	GYP.- PAINTED	GYP.- PAINTED	GYP.- PAINTED	8' - 0"	GYP.- TEXTURED, PAINTED	
105.1.1	SHO.	-	-	-	-	-	-	8' - 0"	GYP.- TEXTURED, PAINTED	ADA SHOWER STALL- ONE PIECE BUILT-IN FIBER GLASS
105.2	CLO.	CARPET	CARPET	GYP.- PAINTED	GYP.- PAINTED	GYP.- PAINTED	GYP.- PAINTED	8' - 0"	GYP.- TEXTURED, PAINTED	
106	BEDROOM	CARPET	CARPET	GYP.- PAINTED	GYP.- PAINTED	GYP.- PAINTED	GYP.- PAINTED	10' - 0"	GYP.- TEXTURED, PAINTED	
106.1	T&B	SHEET VINYL	FLASH COVE VINYL W/ ALUM. CAP STRIP	GYP.- PAINTED	GYP.- PAINTED	GYP.- PAINTED	GYP.- PAINTED	8' - 0"	GYP.- TEXTURED, PAINTED	
106.1.1	SHO.	-	-	-	-	-	-	8' - 0"	GYP.- TEXTURED, PAINTED	ADA SHOWER STALL- ONE PIECE BUILT-IN FIBER GLASS
106.2	CLO.	CARPET	CARPET	GYP.- PAINTED	GYP.- PAINTED	GYP.- PAINTED	GYP.- PAINTED	8' - 0"	GYP.- TEXTURED, PAINTED	
107	BEDROOM	CARPET	CARPET	GYP.- PAINTED	GYP.- PAINTED	GYP.- PAINTED	GYP.- PAINTED	10' - 0"	GYP.- TEXTURED, PAINTED	
107.1	T&B	SHEET VINYL	FLASH COVE VINYL W/ ALUM. CAP STRIP	GYP.- PAINTED	GYP.- PAINTED	GYP.- PAINTED	GYP.- PAINTED	8' - 0"	GYP.- TEXTURED, PAINTED	
107.1.1	SHO.	-	-	-	-	-	-	8' - 0"	GYP.- TEXTURED, PAINTED	ADA SHOWER STALL- ONE PIECE BUILT-IN FIBER GLASS
107.2	CLO.	CARPET	CARPET	GYP.- PAINTED	GYP.- PAINTED	GYP.- PAINTED	GYP.- PAINTED	8' - 0"	GYP.- TEXTURED, PAINTED	
108	BEDROOM	CARPET	CARPET	GYP.- PAINTED	GYP.- PAINTED	GYP.- PAINTED	GYP.- PAINTED	10' - 0"	GYP.- TEXTURED, PAINTED	
108.1	T&B	SHEET VINYL	FLASH COVE VINYL W/ ALUM. CAP STRIP	GYP.- PAINTED	GYP.- PAINTED	GYP.- PAINTED	GYP.- PAINTED	8' - 0"	GYP.- TEXTURED, PAINTED	
108.1.1	SHO.	-	-	-	-	-	-	8' - 0"	GYP.- TEXTURED, PAINTED	ADA SHOWER STALL- ONE PIECE BUILT-IN FIBER GLASS
108.2	CLO.	CARPET	CARPET	GYP.- PAINTED	GYP.- PAINTED	GYP.- PAINTED	GYP.- PAINTED	8' - 0"	GYP.- TEXTURED, PAINTED	
109	BEDROOM	CARPET	CARPET	GYP.- PAINTED	GYP.- PAINTED	GYP.- PAINTED	GYP.- PAINTED	10' - 0"	GYP.- TEXTURED, PAINTED	
109.1	T&B	SHEET VINYL	FLASH COVE VINYL W/ ALUM. CAP STRIP	GYP.- PAINTED	GYP.- PAINTED	GYP.- PAINTED	GYP.- PAINTED	8' - 0"	GYP.- TEXTURED, PAINTED	
109.1.1	SHO.	-	-	-	-	-	-	8' - 0"	GYP.- TEXTURED, PAINTED	ADA SHOWER STALL- ONE PIECE BUILT-IN FIBER GLASS
109.2	CLO.	CARPET	CARPET	GYP.- PAINTED	GYP.- PAINTED	GYP.- PAINTED	GYP.- PAINTED	8' - 0"	GYP.- TEXTURED, PAINTED	
110	BEDROOM	CARPET	CARPET	GYP.- PAINTED	GYP.- PAINTED	GYP.- PAINTED	GYP.- PAINTED	10' - 0"	GYP.- TEXTURED, PAINTED	
110.1	T&B	SHEET VINYL	FLASH COVE VINYL W/ ALUM. CAP STRIP	GYP.- PAINTED	GYP.- PAINTED	GYP.- PAINTED	GYP.- PAINTED	8' - 0"	GYP.- TEXTURED, PAINTED	
110.1.1	SHO.	-	-	-	-	-	-	8' - 0"	GYP.- TEXTURED, PAINTED	ADA SHOWER STALL- ONE PIECE BUILT-IN FIBER GLASS
110.2	CLO.	CARPET	CARPET	GYP.- PAINTED	GYP.- PAINTED	GYP.- PAINTED	GYP.- PAINTED	8' - 0"	GYP.- TEXTURED, PAINTED	
111	BEDROOM	CARPET	CARPET	GYP.- PAINTED	GYP.- PAINTED	GYP.- PAINTED	GYP.- PAINTED	10' - 0"	GYP.- TEXTURED, PAINTED	
111.1	T&B	SHEET VINYL	FLASH COVE VINYL W/ ALUM. CAP STRIP	GYP.- PAINTED	GYP.- PAINTED	GYP.- PAINTED	GYP.- PAINTED	8' - 0"	GYP.- TEXTURED, PAINTED	
111.1.1	SHO.	-	-	-	-	-	-	8' - 0"	GYP.- TEXTURED, PAINTED	ADA SHOWER STALL- ONE PIECE BUILT-IN FIBER GLASS
111.2	CLO.	CARPET	CARPET	GYP.- PAINTED	GYP.- PAINTED	GYP.- PAINTED	GYP.- PAINTED	8' - 0"	GYP.- TEXTURED, PAINTED	
112	BEDROOM	CARPET	CARPET	GYP.- PAINTED	GYP.- PAINTED	GYP.- PAINTED	GYP.- PAINTED	10' - 0"	GYP.- TEXTURED, PAINTED	
112.1	T&B	SHEET VINYL	FLASH COVE VINYL W/ ALUM. CAP STRIP	GYP.- PAINTED	GYP.- PAINTED	GYP.- PAINTED	GYP.- PAINTED	8' - 0"	GYP.- TEXTURED, PAINTED	
112.1.1	SHO.	-	-	-	-	-	-	8' - 0"	GYP.- TEXTURED, PAINTED	ADA SHOWER STALL- ONE PIECE BUILT-IN FIBER GLASS
112.2	CLO.	CARPET	CARPET	GYP.- PAINTED	GYP.- PAINTED	GYP.- PAINTED	GYP.- PAINTED	8' - 0"	GYP.- TEXTURED, PAINTED	
113	BEDROOM	CARPET	CARPET	GYP.- PAINTED	GYP.- PAINTED	GYP.- PAINTED	GYP.- PAINTED	10' - 0"	GYP.- TEXTURED, PAINTED	
113.1	T&B	SHEET VINYL	FLASH COVE VINYL W/ ALUM. CAP STRIP	GYP.- PAINTED	GYP.- PAINTED	GYP.- PAINTED	GYP.- PAINTED	8' - 0"	GYP.- TEXTURED, PAINTED	
113.1.1	SHO.	-	-	-	-	-	-	8' - 0"	GYP.- TEXTURED, PAINTED	ADA SHOWER STALL- ONE PIECE BUILT-IN FIBER GLASS
113.2	CLO.	CARPET	CARPET	GYP.- PAINTED	GYP.- PAINTED	GYP.- PAINTED	GYP.- PAINTED	8' - 0"	GYP.- TEXTURED, PAINTED	
114	BEDROOM	CARPET	CARPET	GYP.- PAINTED	GYP.- PAINTED	GYP.- PAINTED	GYP.- PAINTED	10' - 0"	GYP.- TEXTURED, PAINTED	
114.1	T&B	SHEET VINYL	FLASH COVE VINYL W/ ALUM. CAP STRIP	GYP.- PAINTED	GYP.- PAINTED	GYP.- PAINTED	GYP.- PAINTED	8' - 0"	GYP.- TEXTURED, PAINTED	
114.1.1	SHO.	-	-	-	-	-	-	8' - 0"	GYP.- TEXTURED, PAINTED	ADA SHOWER STALL- ONE PIECE BUILT-IN FIBER GLASS
114.2	CLO.	CARPET	CARPET	GYP.- PAINTED	GYP.- PAINTED	GYP.- PAINTED	GYP.- PAINTED	8' - 0"	GYP.- TEXTURED, PAINTED	
115	BEDROOM	CARPET	CARPET	GYP.- PAINTED	GYP.- PAINTED	GYP.- PAINTED	GYP.- PAINTED	10' - 0"	GYP.- TEXTURED, PAINTED	
115.1	T&B	SHEET VINYL	FLASH COVE VINYL W/ ALUM. CAP STRIP	GYP.- PAINTED	GYP.- PAINTED	GYP.- PAINTED	GYP.- PAINTED	8' - 0"	GYP.- TEXTURED, PAINTED	
115.1.1	SHO.	-	-	-	-	-	-	8' - 0"	GYP.- TEXTURED, PAINTED	ADA SHOWER STALL- ONE PIECE BUILT-IN FIBER GLASS
115.2	CLO.	CARPET	CARPET	GYP.- PAINTED	GYP.- PAINTED	GYP.- PAINTED	GYP.- PAINTED	8' - 0"	GYP.- TEXTURED, PAINTED	
116	BEDROOM	CARPET	CARPET	GYP.- PAINTED	GYP.- PAINTED	GYP.- PAINTED	GYP.- PAINTED	10' - 0"	GYP.- TEXTURED, PAINTED	
116.1	T&B	SHEET VINYL	FLASH COVE VINYL W/ ALUM. CAP STRIP	GYP.- PAINTED	GYP.- PAINTED	GYP.- PAINTED	GYP.- PAINTED	8' - 0"	GYP.- TEXTURED, PAINTED	
116.1.1	SHO.	-	-	-	-	-	-	8' - 0"	GYP.- TEXTURED, PAINTED	ADA SHOWER STALL- ONE PIECE BUILT-IN FIBER GLASS
116.2	CLO.	CARPET	CARPET	GYP.- PAINTED	GYP.- PAINTED	GYP.- PAINTED	GYP.- PAINTED	8' - 0"	GYP.- TEXTURED, PAINTED	
117	HALLWAY 1	CARPET	CARPET	GYP.- PAINTED	GYP.- PAINTED	GYP.- PAINTED	GYP.- PAINTED	10' - 0"	GYP.- TEXTURED, PAINTED	CHAIR RAIL GUARD IN ALL WALLS. SEE DETAIL IN SHEET A5.0
118	CLO.	CARPET	CARPET	GYP.- PAINTED	GYP.- PAINTED	GYP.- PAINTED	GYP.- PAINTED	8' - 0"	GYP.- TEXTURED, PAINTED	
119	CLO.	CARPET	CARPET	GYP.- PAINTED	GYP.- PAINTED	GYP.- PAINTED	GYP.- PAINTED	8' - 0"	GYP.- TEXTURED, PAINTED	
120	LIVING	CARPET	CARPET	GYP.- PAINTED	GYP.- PAINTED	GYP.- PAINTED	GYP.- PAINTED	10' - 0"	GYP.- TEXTURED, PAINTED	STONE WALL FURNACE/TV (EAST SIDE) , VAULTED CEILING. CHAIR RAIL GUARD IN ALL WALLS. SEE DETAIL IN SHEET A5.1
121	DINING	WOOD LAMINATE	WOOD BASE TRIM- PAINTED	GYP.- PAINTED	GYP.- PAINTED	GYP.- PAINTED	GYP.- PAINTED	10' - 0"	GYP.- TEXTURED, PAINTED	VAULTED CEILING. CHAIR RAIL GUARD IN ALL WALLS. SEE DETAIL IN SHEET A5.1
122	COMMON	CARPET	CARPET	GYP.- PAINTED	GYP.- PAINTED	GYP.- PAINTED	GYP.- PAINTED	10' - 0"	GYP.- TEXTURED, PAINTED	STONE WALL FURNACE/TV (WEST SIDE) , VAULTED CEILING. CHAIR RAIL GUARD IN ALL WALLS. SEE DETAIL IN SHEET A5.1
123	KITCHEN	SHEET VINYL	FLASH COVE VINYL W/ ALUM. CAP STRIP	GYP.- PAINTED	GYP.- PAINTED	GYP.- PAINTED	GYP.- PAINTED	10' - 0"	GYP.- TEXTURED, PAINTED	VAULTED CEILING
124	PANTRY	SHEET VINYL	FLASH COVE VINYL W/ ALUM. CAP STRIP	GYP.- PAINTED	GYP.- PAINTED	GYP.- PAINTED	GYP.- PAINTED	8' - 0"	GYP.- TEXTURED, PAINTED	
125	HALLWAY 3	CARPET	CARPET	GYP.- PAINTED	GYP.- PAINTED	GYP.- PAINTED	GYP.- PAINTED	10' - 0"	GYP.- TEXTURED, PAINTED	CHAIR RAIL GUARD IN ALL WALLS. SEE DETAIL IN SHEET A5.0
126	CLO.	CARPET	CARPET	GYP.- PAINTED	GYP.- PAINTED	GYP.- PAINTED	GYP.- PAINTED	8' - 0"	GYP.- TEXTURED, PAINTED	
127	CLO.	CARPET	CARPET	GYP.- PAINTED	GYP.- PAINTED	GYP.- PAINTED	GYP.- PAINTED	8' - 0"	GYP.- TEXTURED, PAINTED	
128	MECH.	SHEET VINYL	FLASH COVE VINYL W/ ALUM. CAP STRIP	GYP.- PAINTED	GYP.- PAINTED	GYP.- PAINTED	GYP.- PAINTED	8' - 0"	GYP.- TEXTURED, PAINTED	
129	STO.	SHEET VINYL	FLASH COVE VINYL W/ ALUM. CAP STRIP	GYP.- PAINTED	GYP.- PAINTED	GYP.- PAINTED	GYP.- PAINTED	8' - 0"	GYP.- TEXTURED, PAINTED	
130	ELEC.	SHEET VINYL	FLASH COVE VINYL W/ ALUM. CAP STRIP	GYP.- PAINTED	GYP.- PAINTED	GYP.- PAINTED	GYP.- PAINTED	8' - 0"	GYP.- TEXTURED, PAINTED	ATTIC ACCESS HATCH
131	MECH	SHEET VINYL	FLASH COVE VINYL W/ ALUM. CAP STRIP	GYP.- PAINTED	GYP.- PAINTED	GYP.- PAINTED	GYP.- PAINTED	8' - 0"	GYP.- TEXTURED, PAINTED	
132	RISER	SEALED CONCRETE	RUBBER BASE	GYP.- PAINTED	GYP.- PAINTED	GYP.- PAINTED	GYP.- PAINTED	8' - 0"	GYP.- TEXTURED, PAINTED	
133	LAUNDRY	SHEET VINYL	FLASH COVE VINYL W/ ALUM. CAP STRIP	GYP.- PAINTED	GYP.- PAINTED	GYP.- PAINTED	GYP.- PAINTED	9' - 0"	2'x4' VINYL LAY-IN CEILING	MOISTURE RESISTANT
134	FAMILY	CARPET	CARPET	GYP.- PAINTED	GYP.- PAINTED	GYP.- PAINTED	GYP.- PAINTED	8' - 0"	GYP.- TEXTURED, PAINTED	CHAIR RAIL GUARD IN ALL WALLS. SEE DETAIL IN SHEET A5.0
135	COMMON BATH	SHEET VINYL	FLASH COVE VINYL W/ ALUM. CAP STRIP	GYP.- PAINTED	GYP.- PAINTED	GYP.- PAINTED	GYP.- PAINTED	8' - 0"	GYP.- TEXTURED, PAINTED	
135.1	SHO.	-	-	-	-	-	-	8' - 0"	GYP.- TEXTURED, PAINTED	ADA SHOWER STALL- ONE PIECE BUILT-IN FIBER GLASS
136	HALLWAY 2	CARPET	CARPET	GYP.- PAINTED	GYP.- PAINTED	GYP.- PAINTED	GYP.- PAINTED	10' - 0"	GYP.- TEXTURED, PAINTED	CHAIR RAIL GUARD IN ALL WALLS. SEE DETAIL IN SHEET A5.0
137	OFFICE	CARPET	CARPET	GYP.- PAINTED	GYP.- PAINTED	GYP.- PAINTED	GYP.- PAINTED	8' - 0"	GYP.- TEXTURED, PAINTED	CHAIR RAIL GUARD IN ALL WALLS. SEE DETAIL IN SHEET A5.0
138	BEAUTY	SHEET VINYL	FLASH COVE VINYL W/ ALUM. CAP STRIP	GYP.- PAINTED	GYP.- PAINTED	GYP.- PAINTED	GYP.- PAINTED	8' - 0"	GYP.- TEXTURED, PAINTED	CHAIR RAIL GUARD IN ALL WALLS. SEE DETAIL IN SHEET A5.0
139	TOILET	SHEET VINYL	FLASH COVE VINYL W/ ALUM. CAP STRIP	GYP.- PAINTED	GYP.- PAINTED	GYP.- PAINTED	GYP.- PAINTED	8' - 0"	GYP.- TEXTURED, PAINTED	
140	STO.	CARPET	CARPET	GYP.- PAINTED	GYP.- PAINTED	GYP.- PAINTED	GYP.- PAINTED	8' - 0"	GYP.- TEXTURED, PAINTED	
141	LOUNGE	CARPET	CARPET	GYP.- PAINTED	GYP.- PAINTED	GYP.- PAINTED	GYP.- PAINTED	9' - 0"	GYP.- TEXTURED, PAINTED	CHAIR RAIL GUARD IN ALL WALLS. SEE DETAIL IN SHEET A5.0
142	OUTDOOR PATIO	SEALED CONCRETE	-	-	-	-	-	12' - 0"	PREFINISHED METAL SOFFIT	

ENSIGN
THE STANDARD IN ENGINEERING

SALT LAKE CITY
45 W. 10000 S., Suite 500
Sandy, UT 84070
Phone: 801.255.0529

LAYTON
Phone: 801.547.1100

TOOELE
Phone: 435.843.3590

CEDAR CITY
Phone: 435.865.1453

RICHFIELD
Phone: 435.590.0187

WWW.ENSIGNENG.COM

CLIENT INFORMATION:

CLIENT INFORMATION:

TENDER CARE HOSPICE ASSISTED LIVING FACILITY

5TH NORTH AND 1ST EAST STREET PRICE CITY, UTAH

STEVEN N. WARP
STATE OF UTAH
22-11-812-0301
LICENSED ARCHITECT

PERMIT 03/08/16

NO.	DATE	REVISION

SCHEDULES

PROJECT NUMBER
6803
DATE
12-31-15
DRAWN BY
R. MALIGON
PROJECT ENGINEER
A. HAWKINS
PROJECT MANAGER
C. DUNCAN

A6.1

SHEET INDEX

S0.0 GENERAL STRUCTURAL NOTES
S0.1 SPECIAL INSPECTION
S0.2 STRUCTURAL SCHEDULES
S0.3 STRUCTURAL SCHEDULES
S1.0 FOOTING & FOUNDATION PLAN
S2.0 WALL FRAMING PLAN
S3.0 ROOF FRAMING PLAN
S4.0 FOOTING & FOUNDATION DETAILS
S5.0 WALL FRAMING DETAILS
S6.0 ROOF FRAMING DETAILS

DESIGN CRITERIA

1. GOVERNING BUILDING CODE: **2012 IBC**

2. ROOF LOADING:
   - A. GROUND SNOW LOAD = 53 PSF (NON-REDUCIBLE)
   - B. ROOF SNOW LOAD = 37 PSF
   - C. LIVE LOAD = 20 PSF (REDUCIBLE)
   - D. DEAD LOAD = 20 PSF

3. FLOOR LOADING:
   - A. LIVE LOAD = 40 PSF
   - B. STAIR LIVE LOAD = 100 PSF
   - C. DEAD LOAD = 20 PSF

4. SEISMIC LOADING:
   - A. Ss = 0.428g
   - B. S1 = 0.130g
   - C. SDS = 0.416
   - D. SD1 = 0.198
   - E. BASIC SEISMIC FORCE RESISTING SYSTEM = BEARING WALL SYSTEM: WOOD SHEARWALLS
   - F. RESPONSE MOD FACTOR, R = 6.5
   - G. DESIGN BASE SHEAR = 0.064W
   - H. SEISMIC RESPONSE COEFFICIENT, CS = 0.064
   - I. ANALYSIS PROCEDURE = EQUIVALENT LATERAL FORCE PROCEDURE
   - J. SEISMIC DESIGN CATEGORY = C
   - K. SITE CLASS = D
   - L. IMPORTANCE FACTOR I = 1.0
   - M. RISK CATEGORY = II

5. WIND LOADING:
   - A. BASIC WIND SPEED = 115 MPH - 3 SEC GUST
   - B. EXPOSURE = C
   - C. RISK CATEGORY = II
   - D. INTERNAL PRESSURE COEFFICIENT = ± 0.18
   - E. BUILDING CLASSIFICATION = ENCLOSED
   - F. COMP. & CLADDING WIND PRESSURE = 23.5 PSF AT ZONE 5
     = 19.0 PSF AT ZONE 4

GENERAL

1. ALL CONSTRUCTION SHALL BE IN CONFORMANCE WITH THE GOVERNING BUILDING CODE AND SUPPLEMENTS UNLESS HIGHER STANDARD IS REQUIRED BY LOCAL BUILDING OFFICIAL.
2. THE CONTRACTOR SHALL VERIFY ALL DIMENSIONS AND CONDITIONS AT THE SITE.
3. THE CONTRACTOR SHALL BE RESPONSIBLE FOR SAFETY AND PROTECTION WITHIN AND ADJACENT TO THE JOB SITE.
4. THE CONTRACTOR IS RESPONSIBLE FOR MEETING ALL APPLICABLE OSHA SAFETY REQUIREMENTS DURING CONSTRUCTION.
5. DURING AND AFTER CONSTRUCTION THE CONTRACTOR AND/OR OWNER SHALL KEEP LOADS ON THE STRUCTURE WITHIN THE LIMITS OF THE DESIGN LOADS. CONSTRUCTION MATERIAL SHALL BE SPREAD OUT IF PLACE ON FRAMED FLOORS OR ROOF.
6. DO NOT SCALE DRAWINGS. IF DIMENSIONS ARE IN QUESTION, THE CONTRACTOR SHALL BE RESPONSIBLE FOR OBTAINING CLARIFICATION FROM THE ENGINEER BEFORE CONTINUING WITH CONSTRUCTION.
7. THE TYPICAL DETAILS SHALL BE USED WHEREVER APPLICABLE UNLESS OTHERWISE NOTED ON THE DRAWINGS. SPECIFIC NOTES AND DETAILS ON DRAWINGS SHALL TAKE PRECEDENCE OVER GENERAL NOTES AND TYPICAL DETAILS.
8. ALL OMISSIONS OR CONFLICTS BETWEEN THE VARIOUS ELEMENTS OF THE WORKING DRAWINGS AND/OR SPECIFICATIONS SHALL BE BROUGHT TO THE ATTENTION OF THE STRUCTURAL ENGINEER BEFORE PROCEEDING WITH ANY WORK INVOLVED. IN CASE OF CONFLICT, FOLLOW MOST STRINGENT REQUIREMENT AS DETERMINED BY STRUCTURAL ENGINEER WITHOUT COST TO OWNER.
9. THE CONTRACT STRUCTURAL DRAWINGS AND SPECIFICATIONS REPRESENT THE FINISHED STRUCTURE. THEY DO NOT INDICATE THE METHOD OF CONSTRUCTION. THE CONTRACTOR IS RESPONSIBLE FOR CONSTRUCTION MEANS, METHODS, TECHNIQUES, SEQUENCES AND PROCEDURES.
10. WHERE REFERENCE IS MADE TO VARIOUS TEST STANDARDS FOR MATERIALS, SUCH STANDARDS SHALL BE THE LATEST EDITION AND/OR ADDENDUM.
11. ESTABLISH AND VERIFY ALL OPENINGS AND INSERTS FOR ARCHITECTURAL, MECHANICAL, ELECTRICAL AND PLUMBING WITH APPROPRIATE TRADES, DRAWINGS AND SUBCONTRACTORS PRIOR TO CONSTRUCTION. DO NOT PENETRATE ANY STRUCTURAL ELEMENTS (BEAMS, COLUMNS, WALLS, SLABS, STEEL DECKS, ETC.) WITHOUT PRIOR WRITTEN APPROVAL OF STRUCTURAL ENGINEER THROUGH ARCHITECT.
12. ANY ENGINEERING DESIGN PROVIDED BY OTHERS AND SUBMITTED FOR REVIEW SHALL BEAR THE SEAL OF A CIVIL OR STRUCTURAL ENGINEER REGISTERED IN THE STATE IN WHICH THE PROJECT IS LOCATED.

STRUCTURAL OBSERVATIONS BY ENSIGN ENGINEERING

1. ENSIGN ENGINEERING MAY PERFORM STRUCTURAL OBSERVATIONS AT CRITICAL PHASES OF CONSTRUCTION. THIS INCLUDES BUT IS NOT LIMITED TO; REBAR PLACEMENT PRIOR TO POURING OF CONCRETE FOOTINGS AND FOUNDATION WALLS, ETC. COPIES OF THE SITE OBSERVATION REPORT WILL BE DISTRIBUTED TO THE ARCHITECT, CONTRACTOR, AND BUILDING OFFICIAL.
2. OBSERVATION VISITS TO THE JOB SITE BY ENSIGN ENGINEERING FIELD REPRESENTATIVES SHALL NEITHER BE CONSTRUED AS INSPECTION NOR APPROVAL OF CONSTRUCTION.

DEFERRED SUBMITTALS

1. DEFERRED SUBMITTALS ARE THOSE PORTIONS OF THE DESIGN WHICH ARE NOT SUBMITTED AT THE TIME OF PERMIT APPLICATION AND WHICH ARE TO BE SUBMITTED TO THE BUILDING OFFICIAL WITHIN A SPECIFIED PERIOD.
2. SUBMITTAL DOCUMENTS FOR DEFERRED SUBMITTAL ITEMS SHALL BE SUBMITTED TO THE ENGINEER OF RECORD THROUGH THE ARCHITECT AND GENERAL CONTRACTOR WITHIN 6 WEEKS OF AWARD OF CONTRACT TO THE GENERAL CONTRACTOR. ONCE THE SUBMITTAL DOCUMENTS HAVE BEEN FOUND TO BE IN GENERAL CONFORMANCE TO THE CONTRACT DOCUMENTS, THE ENGINEER OF RECORD WILL FORWARD THEM TO THE ARCHITECT WITH A NOTATION INDICATING THAT THEY ARE IN GENERAL CONFORMANCE WITH THE DESIGN OF THE BUILDING. THE ARCHITECT WILL FORWARD THE DEFERRED SUBMITTAL DOCUMENTS TO THE GENERAL CONTRACTOR WHO WILL MAINTAIN ONE SET ON SITE FOR REFERENCE BY THE CITY INSPECTOR. THE DEFERRED SUBMITTAL ITEMS SHALL NOT BE INSTALLED UNTIL THE SUBMITTAL DOCUMENTS HAVE BEEN APPROVED BY THE BUILDING OFFICIAL.
3. ITEMS THAT ARE SUBMITTED FOR CONSIDERATION AS DEFERRED SUBMITTALS ARE AS FOLLOWS:
   - A. STEEL JOISTS AND JOIST GIRDERS
   - B. PREFABRICATED STEEL STAIRS
   - C. PRE-ENGINEERED WOOD TRUSSES

SHOP DRAWINGS

1. SHOP DRAWINGS SHALL BE SUBMITTED TO THE GENERAL CONTRACTOR PRIOR TO FABRICATION OR ERECTION FOR THE FOLLOWING ITEMS:
   - A. REINFORCING STEEL
   - B. STRUCTURAL STEEL
   - C. MISCELLANEOUS METALS
   - D. STEEL JOISTS & JOIST GIRDERS
   - E. PLYWOOD I-JOISTS
   - F. PRE-ENGINEERED WOOD TRUSSES
   - G. CONCRETE MIX DESIGNS
   - I. POST TENSION ELONGATION
   - H. ANCHOR TIE-DOWN SYSTEMS
2. THE GENERAL CONTRACTOR SHALL SUBMIT THREE (3) COPIES OF ALL SHOP DRAWINGS TO THE STRUCTURAL ENGINEER FOR REVIEW PRIOR TO FABRICATION OR ERECTION. FIVE (5) WORKING DAYS (MINIMUM) SHALL BE ALLOWED FOR THE REVIEW OF THESE SHOP DRAWINGS BY THE STRUCTURAL ENGINEER.
3. THE GENERAL CONTRACTOR WILL REVIEW AND STAMP ALL SHOP DRAWINGS AND PRODUCT DATA FOR CONFORMANCE WITH THE CONSTRUCTION DOCUMENTS PRIOR TO SUBMISSION. ANY SHOP DRAWINGS OR PRODUCT DATA NOT REVIEWED AND STAMPED BY THE GENERAL CONTRACTOR WILL BE RETURNED WITHOUT REVIEW.
4. ANY SHOP DRAWING NOT CHECKED AND INITIALED BY THE SUPPLIER/DETAILER PRIOR TO SUBMITTING FOR ARCHITECTURAL AND ENGINEERING REVIEW, WILL BE RETURNED WITHOUT REVIEW.
5. THE CONSTRUCTION DOCUMENTS MAY NOT BE REPRODUCED FOR USE AS SHOP DRAWINGS.
6. ELECTRONIC FILES OF CONSTRUCTION DOCUMENTS WILL NOT BE MADE AVAILABLE FOR USE AS SHOP DRAWINGS.

FOUNDATIONS (w Report)

1. GEOTECHNICAL CONSULTANT: ***Company Name***
2. REPORT NUMBER: ***Report Number***
3. REPORT DATE: ***Month Day, Year***
4. SPREAD FOOTINGS SHALL BEAR ON UNDISTURBED, UNIFORM, NATIVE GRAVEL SOILS OR ENTIRELY ON A MINIMUM OF 18 INCHES OF PROPERLY PLACED AND COMPACTED GRANULAR STRUCTURAL FILL, AS DETERMINED BY THE GEOTECHNICAL ENGINEER OF RECORD. DESIGN SOIL BEARING VALUE IS ***1500*** PSF. BOTTOM OF FOOTINGS SHALL BE A MINIMUM OF ***30*** INCHES BELOW LOWEST ADJACENT FINAL GRADE. FOR TOP OF FOOTING ELEVATIONS SEE FOUNDATION PLAN.
5. A 1.33 ALLOWABLE SOIL BEARING PRESSURE INCREASE IS ALLOWED FOR WIND/ SEISMIC LOADING.
6. ALL WATER SHALL BE REMOVED FROM FOUNDATION EXCAVATION PRIOR TO PLACING OF CONCRETE. DO NOT PLACE CONCRETE UNDER WATER OR ON FROZEN GROUND.
7. ANY FILL TO BE PLACED UNDER THE BUILDING AND FOOTINGS SHALL BE A WELL GRADED GRANULAR MATERIAL AS PER GEOTECHNICAL REPORT. WIDTH OF COMPACTED STRUCTURAL FILL SHALL EXTEND A MINIMUM DISTANCE EQUAL TO THE DEPTH OF FILL BEYOND THE EDGES OF THE FOOTINGS.
8. ALL FILL AND BACK FILL SHALL BE COMPACTED TO A MINIMUM OF 95% OF MAXIMUM RELATIVE DENSITY FOR BUILDING CONSTRUCTION AND 90% FOR GENERAL SITE WORK.
9. ANY UNUSUAL SOIL CONDITIONS (WATER, SOFT LAYERS, ROCK OUTCROPPINGS, ETC. ENCOUNTERED DURING EXCAVATION FOR FOOTINGS SHOULD BE IMMEDIATELY BROUGHT TO THE ATTENTION OF THE STRUCTURAL AND SOIL ENGINEERS PRIOR TO PROCEEDING.

STEEL REINFORCING

1. TYPICAL REINFORCING BAR STRENGTHS
   - A. REINFORCING (NON-WELDABLE) = ASTM A615, DEFORMED, Fy = 60 KSI (420 MPa)
   - B. REINFORCING (WELDABLE) = ASTM A706, DEFORMED, Fy = 60 KSI (420 MPa)
2. TYPICAL CLEAR CONCRETE COVERAGES:
   - A. CONCRETE CAST AGAINST AND PERMANENTLY EXPOSED TO EARTH = 3" FORMED
   - B. CONCRETE EXPOSED TO EARTH OR WEATHER = (#6 AND LARGER) 2"
     (#5 AND SMALLER) 1-1/2"
   - C. ALL OTHERS PER LATEST EDITION OF ACI 318.
3. ALL BARS PER CRSI SPECIFICATIONS AND HANDBOOK. LATEST ACI CODE AND DETAILING MANUAL APPLY. SECURELY TIE ALL BARS IN LOCATION BEFORE PLACING CONCRETE. REINFORCING BAR SPACINGS GIVEN ARE MAXIMUM ON CENTERS.
4. ALL REINFORCING TO BE WELDED SHALL BE WELDED IN ACCORDANCE WITH AWS D1.4. NO TACK WELDING OF REINFORCING BARS IS ALLOWED WITHOUT PRIOR REVIEW OF PROCEDURE BY STRUCTURAL ENGINEER.

ADHESIVE ANCHORING SYSTEMS

1. ACCEPTABLE MANUFACTURER'S (UNLESS NOTED OTHERWISE ON PLANS): ALL ADHESIVE SHALL BE APPROVED AND RATED FOR CRACKED CONCRETE.
   - A. SIMPSON STRONG-TIE:
     - a. SET-XP, SEE ESR-2508 REPORT FOR CONCRETE SPECIFICATIONS OR IAPMO 265 REPORT FOR MASONRY SPECIFICATIONS.
     - b. AT-XP, SEE IAPMO 263 REPORT FOR CONCRETE SPECIFICATIONS OR IAPMO 281 REPORT FOR MASONRY SPECIFICATIONS
   - B. HILTI:
     - a. HIT-RE 500-SD, SEE ESR-2322 REPORT FOR CONCRETE SPECIFICATIONS
     - b. HIT-HY 200, SEE ESR-3187 REPORT FOR CONCRETE SPECIFICATIONS
     - c. HIT-HY 150 MAX SD, SEE ESR-3013 REPORT FOR CONCRETE SPECIFICATIONS
   - C. POWERS:
     - a. PE 1000+, SEE ESR 2583 REPORT FOR CONCRETE SPECIFICATIONS
     - b. PURE110+, SEE ESR 3298 REPORT FOR CONCRETE SPECIFICATIONS
     - c. AC 100+ GOLD, SEE ESR 2582 REPORT FOR CONCRETE SPECIFICATIONS
2. ANCHOR INSTALLATION:
   - A. INSTALL ANCHORS PER MANUFACTURER'S REQUIREMENTS. THESE REQUIREMENTS INCLUDE, BUT ARE NOT LIMITED TO, HOLE PREPARATION, HOLE SIZE, EPOXY PROPORTIONS AND QUANTITIES, INSTALLATION TEMPERATURE, AND CURE TIMES.

STRUCTURAL ABBREVIATIONS

AB.	ANCHOR BOLT (S)	IN.	INCH
ABV.	ABOVE	INSUL.	INSULATION
@	AT	INT.	INTERIOR
ALT.	ALTERNATE	I.F.	INSIDE FACE
APPROX.	APPROXIMATE		
ARCH.	ARCHITECT (URAL)	JT.	JOINT
		JST.	JOIST
BM.	BEAM		
BLW.	BELOW	KLF.	KIPS PER LINEAL FOOT
BRG.	BEARING	KSF.	KIPS PER SQUARE FOOT
BTWN.	BETWEEN	KSI.	KIPS PER SQUARE INCH
BLDG.	BUILDING	K	KIPS
BOT.	BOTTOM		
		LF.	LINEAL FOOT
C.J.	CONSTRUCTION JOINT	LBS.	POUNDS
	OR CONTROL JOINT	LLH.	LONG LEG HORIZONTAL
CJP.	COMPLETE JOINT PENETRATION	LLV.	LONG LEG VERTICAL
CMU	CONCRETE MASONRY UNIT		
COL.	COLUMN	MAS.	MASONRY
CONC.	CONCRETE	MAX.	MAXIMUM
CONST.	CONSTRUCTION	MCJ.	MASONRY CONTROL JOINT
CONT.	CONTINUOUS	MECH.	MECHANICAL
CTR.	CENTER	MFR.	MANUFACTURER
		MIN.	MINIMUM
DB.	DECK BEARING	MISC.	MISCELLANEOUS
DBA.	DEFORMED BAR ANCHORS		
DBL.	DOUBLE	NIC.	NOT IN CONTRACT
DET.	DETAIL	NTS.	NOT TO SCALE
DIA.	DIAMETER		
DIM.	DIMENSION	OPNG.	OPENING
DWG.	DRAWING	OPP.	OPPOSITE
DWL.	DOWEL	O.C.	ON CENTER
		O.F.	OUTSIDE FACE
EA.	EACH	OWSJ.	OPEN WEB STEEL JOIST
E.J.	EXPANSION JOINT		
	(SEISMIC SEPARATION JOINT)	PCF.	POUNDS PER CUBIC FOOT
ELEV.	ELEVATION	PNL.	PANEL
ELEC.	ELECTRICAL	PSF.	POUNDS PER SQUARE FOOT
EQUIP.	EQUIPMENT	PSI.	POUNDS PER SQUARE INCH
EQ.	EQUAL	PT.	POINT
EXIST.	EXISTING		
EXP.	EXPANSION / EXPOSED	REINF.	REINFORCING
EXT.	EXTERIOR	R.D.	ROOF DRAIN
E.F.	EACH FACE	REQ'D	REQUIRED
E.W.	EACH WAY		
		SHT.	SHEET
F.D.	FLOOR DRAIN	SI.	SPECIAL INSPECTION
FDTN.	FOUNDATION	S.O.G.	SLAB ON GRADE
F.F.	FINISH FLOOR	STD.	STANDARD
FIN.	FINISH	STIFF.	STIFFENER
FL.	FLOOR	STL.	STEEL
FT.	FOOT	SQ.	SQUARE
FTG.	FOOTING	SIM.	SIMILAR
FV.	FIELD VERIFY	STR.	STRUCTURAL
		STAG.	STAGGERED
GA.	GAUGE		
GALV.	GALVANIZED	T&B.	TOP AND BOTTOM
GLB.	GLU-LAMINATED BEAM	TEMP.	TEMPORARY
GR.	GRADE	T.O.	TOP OF
GSN.	GENERAL STRUCTURAL NOTES	TOC.	TOP OF CONCRETE
		TOF.	TOP OF FOOTING
HB.	HORIZONTAL BRIDGING	TOS.	TOP OF SLAB
HT.	HEIGHT	TOW.	TOP OF WALL
HORIZ.	HORIZONTAL	TYP.	TYPICAL
HSA.	HEADED STUD ANCHORS		
		U.N.O.	UNLESS NOTED OTHERWISE
IBC.	INTERNATIONAL BUILDING CODE	VERT.	VERTICAL
ICBO.	INTERNATIONAL CONFERENCE	w/	WITH
	OF BUILDING OFFICIALS	WWF.	WELD WIRE FABRIC
		WWM.	WELD WIRE MESH

CONCRETE

1. CONCRETE SHALL CONFORM TO ALL REQUIREMENTS OF ACI 318-11 "BUILDING CODE REQUIREMENTS FOR STRUCTURAL CONCRETE", EXCEPT AS MODIFIED BY THE SUPPLEMENTAL REQUIREMENTS BELOW:

NO WATER TO BE ADDED TO CONCRETE ON SITE EITHER BEFORE OR AFTER PLACEMENT

ELEMENT TYPE	MIN. COMP. STRENGTH f'c (psi)	EXPOSURE CLASSES F	S	P	C	CEMENT TYPE	MAX. W/C RATIO	AIR CONTENT %	MAX. AGG. SIZE	MAX. FLY ASH %	APPLICABLE SPECIFIC INSTRUCTION NOTES
FOOTINGS	3000	F1	S0	P0	C1	II	0.45	5	3/4"	25	
FDTN WALLS, PIERS, & GRADE BEAMS	3000	F1	S0	P0	C1	II	0.45	5	3/4"	25	
BEARING / SHEAR WALLS	4000	F1	S0	P0	C0	II	0.45	5	3/4"	25	
COLUMNS	5000	F0	S0	P0	C0	II	0.45	--	3/4"	25	
BEAMS	4000	F0	S0	P0	C0	II	0.45	--	3/4"	25	
SUSPENDED SLABS	4000	F0	S0	P0	C0	II	0.45	--	3/4"	25	
INTERIOR SLAB ON GRADE	4000	F0	S0	P0	C0	II	0.45	--	1 1/2"	25	
INT. REINFORCED SLAB ON GRADE	4000	F0	S0	P0	C0	II	0.45	--	1 1/2"	25	
EXTERIOR SLAB ON GRADE	4000	F2	S0	P0	C2	II	0.40	5 1/2	1 1/2"	25	
EXT. REINFORCED SLAB ON GRADE	4000	F2	S0	P0	C2	II	0.40	5 1/2	1 1/2"	25	
POST-TENSIONED SLABS	5000	F3	S0	P0	C2	II	0.40	6	3/4"	20	C
CONCRETE OVER STEEL DECK	4000	F0	S0	P0	C0	II	0.45	--	3/4"	25	D

SPECIFIC INSTRUCTION NOTES:

A. PROVIDE FIBRILLATED MICRO-REINFORCEMENT POLYPROPELENE FIBERS TO THE CONCRETE AT THE RATE OF 2 LBS/YD3/ PRIOR TO PLACEMENT PER ASTM C-1116, TYPE III, SECTION 4.1.3

B. XYPEX NOTE: XYPEX MIXTURE TO BE ADDED TO CONCRETE MIX FOR WATER PROOFING REQUIREMENT, AT A RATE OF 2% BY WEIGHT OF CEMENTITIOUS MATERIAL. CONTACT MANUFACTURER FOR MIX DESIGN REQUIREMENTS AND PLACEMENT. <http://www.imxtechnologies.com/>

C. POST TENSION CONCRETE SHALL ACHIEVE A COMPRESSIVE STRENGTH OF 3,000 PSI MINIMUM WITHIN 72 HOURS AFTER PLACEMENT.

D. LIGHTWEIGHT CONCRETE SHALL BE USED.

E. A PEA GRAVEL MIX SHALL BE USED.

ADDITIONAL COMMENTS:

1. ***DESIGN f'c = 2,500 PSI FOR FOOTINGS AND FOUNDATIONS - NO SPECIAL INSPECTION IS REQUIRED.***

2. CONCRETE SHALL ATTAIN THE LISTED MINIMUM COMPRESSIVE STRENGTH AT 28 DAYS.
3. AIR CONTENT TOLERANCE IS +/- 1-1/2% AT THE TIME OF FINAL PLACEMENT.
4. AIR ENTRAINMENT SHALL BE ADJUSTED FOR THE USE OF ADMIXTURES AND FLY ASH.
5. SUPERPLASTICIZER MAY BE ADDED TO INCREASE SLUMP AS REQUIRED FOR PLACEMENT.
6. CALCIUM CHLORIDE SHALL NOT BE ADDED TO THE CONCRETE MIX.
7. USE TYPE V CEMENT WHEN HIGH SULPHATE RESISTANCE IS REQUIRED BY THE GEOTECHNICAL REPORT OR WHEN THE 'S' EXPOSURE CLASS IS DESIGNATED AS S2 OR S3. IF S3 IS REQUIRED, POZZOLAN OR SLAG CEMENT IN ACCORDANCE WITH ASTM C1012 IS ALSO REQUIRED.
8. MATERIAL DESIGNATIONS:
   - A. CEMENT = ASTM C150
   - B. NORMAL WEIGHT AGGREGATES = ASTM C33
   - C. LIGHTWEIGHT AGGREGATES = ASTM C330
   - D. FLY ASH, CLASS F POZZOLAN = ASTM C618
   - E. REINFORCING STEEL
     - a. NORMAL = ASTM A615
     - b. WELDABLE = ASTM A706
   - F. DEFORMED BAR ANCHORS (DBA) = ASTM A496
   - G. HEADED STUD ANCHORS (HSA) = ASTM A108
   - H. AIR ENTRAINMENT ADMIXTURES = ASTM C260
   - I. WATER REDUCING ADMIXTURES = ASTM C494, TYPE 'A'
   - J. RETARDING ADMIXTURES = ASTM C494, TYPE 'B'
   - K. WATER REDUCING & RETARDING ADMIXTURES = ASTM C494, TYPE 'D'
   - L. HIGH RANGE WATER REDUCING ADMIXTURES = ASTM C494, TYPE 'F'
   - M. HIGH RANGE WATER REDUCING & RETARDING ADMIXTURES = ASTM C494, TYPE 'G'
   - N. ADMIXTURES ARE TO COME FROM AN ISO9001 QUALITY CERTIFIED MANUFACTURER. ALL ADMIXTURES ARE TO COME FROM THE SAME MANUFACTURER TO ENSURE COMPATIBILITY.
   - O. NO ALUMINUM CONDUIT OR PRODJUCTS CONTAINING ALUMINUM OR ANY OTHER PRODUCTS THAT REACT ADVERSLY WITH THE CONCRETE SHALL BE EMBEDDED IN THE CONCRETE.
9. A STATEMENT OF MIX DESIGN FOR ALL CONCRETE SHALL BE SUBMITTED AND APPROVED BY THE ENGINEER PRIOR TO COMMENCING WORK.
10. PLACEMENT, CURING, AND PROTECTION OF CONCRETE SHALL CONFORM TO ACI 318-11. THE USE OF CHEMICALS OR ADDITIVES TO PREVENT FREEZING SHOULD NOT BE PERMITTED, REFER TO SPECIFICATIONS AND TO DIRECTIVES BY STRUCTURAL ENGINEER FOR ADDITIONAL COLD WEATHER REQUIREMENTS. ALL CONCRETE SHALL BE PROPERLY VIBRATED IN PLACE USING INTERNAL VIBRATING RODS (MECHANICAL OR ELECTRICAL).
11. ALL SLABS ON GRADE SHALL BE PLACED WITH CONTROL JOINTS OR SAW CUTS AT NO MORE THAN 30 TIMES THE SLAB THICKNESS ON CENTER (MAXIMUM) OR AS SHOWN/NOTED ON DRAWINGS. LENGTH TO WIDTH RATIO OF THE SLAB BETWEEN CONTROL JOINTS EACH WAY SHALL BE NO MORE THAN 1.25. COMPLETE CONTROL JOINTS WITHIN 12 HOURS OF CONRETE PLACEMENT. TOOLED CONTROL JOINTS ARE TO BE AT MINIMUM 1/4 OF THE SLAB THICKNESS AND NO MORE THAN 1/3 OF THE SLAB THICKNESS. FOR SAW CUT CONTROL JOINTS, SEE THE SLAB JOINT TYPICAL DETAILS.
12. SLAB ON GRADE CONSTRUCTION JOINTS SHALL NOT EXCEED 125' - 0" O.C. IN ANY DIRECTION. CONSTRUCTION JOINTS MAY BE EITHER A DOWEL TYPE CONTRUCTION JOINT OR A KEYWAY TYPE CONSTRUCTION JOINT. SEE THE SLAB JOINT TYPICAL DETAILS FOR MORE INFORMATION.
13. CONCRETE TESTS WILL BE MADE ON MAJOR POURS AND AT SUCH OTHER TIMES AS MAY BE REQUIRED BY THE ENGINEER. EACH TEST SHALL CONSIST OF (3) CYLINDERS OF WHICH ONE SHALL BE TESTED AT SEVEN DAYS, ONE TESTED AT TWENTY-EIGHT DAYS AND ONE RETAINED IN RESERVE FOR LATER TESTS, IF REQUIRED. IN GENERAL, ONE TEST SHALL BE MADE FOR EACH 100 CUBIC YARDS OF CONCRETE ON EACH DAY'S POUR. SPECIMENS SHALL BE MADE AND TESTED IN ACCORDANCE WITH ASTM C31 & C39 STANDARDS. SLUMP AND AIR ENTRAINMENT TESTS SHALL ALSO BE MADE WITH EACH SET OF CYLINDERS TAKEN.
14. BEFORE CONCRETE IS POURED, CHECK WITH ALL TRADES TO INSURE PROPER PLACEMENT OF ALL OPENINGS, SLEEVES, CURBS, CONDUITS, BOLTS, INSERTS, ETC., RELATED TO THE WORK.
15. THE CONTRACTOR IS RESPONSIBLE FOR THE PLACEMENT, REMOVAL, AND DESIGN OF ALL FORMWORK AND SHORING.
16. SUSPENDED CONCRETE STRUCTURAL MEMBERS SHALL NOT BE STRIPPED OF FORMS UNTIL CONCRETE HAS REACHED ITS DESIGN STRENGTH.
17. FOR LAP SPLICE LENGTH, SEE LAP SPLICE SCHEDULE.
18. SEE CIVIL DRAWINGS FOR SITE CONCRETE REQUIREMENTS.

DRYPACK/FLOWABLE GROUT

1. THE SPACE BENEATH ALL BASEPLATES AND BEARING PLATES SHALL BE THOROUGHLY CLEANED BEFORE DRYPACKING OR GROUTING. DRYPACK/GROUT SOLID BENEATH ALL BASEPLATES AND BEARING PLATES. NO VOIDS ARE PERMISSIBLE. USE OF DRYPACK OR FLOWABLE GROUT IS AT THE CONTRACTORS OPTION UNLESS SPECIFICALLY NOTED ON THE PLANS OR DETAILS. DRYPACK/GROUT PER THE FOLLOWING:
   - A. DRYPACK - PORTLAND CEMENT, ASTM C150, TYPE I; AND CLEAN, NATURAL SAND, ASTM C404, SIZE NO. 2. MIX AT RATIO OF 1 PART CEMENT TO 2-1/2 PARTS SAND, BY VOLUME, WITH MINIMUM WATER REQUIRED FOR PLACEMENT AND HYDRATION. MINIMUM COMPRESSIVE STRENGTH SHALL BE 5,000 PSI AT 28 DAYS WHEN TESTED IN ACCORDANCE WITH ASTM C1107.
   - B. FLOWABLE GROUT - PREMIXED, NONMETALLIC, NONCORROSIVE, NONSTAINING GROUT CONTAINING SELECTED SILICA SANDS, PORTLAND CEMENT, SHRINKAGE COMPENSATING AGENTS, PLASTICIZING AND WATER-REDUCING AGENTS, COMPLYING WITH ASTM C1107, OF CONSISTENCY SUITABLE FOR APPLICATION, AND A 30-MINUTE WORKING TIME. MINIMUM COMPRESSIVE STRENGTH SHALL BE 5000 PSI AT 28 DAYS WHEN TESTED IN ACCORDANCE WITH ASTM C1107.

WOOD

1. ALL STRUCTURAL LUMBER, UNLESS NOTED OTHERWISE, SHALL BE DOUGLAS FIR-LARCH NO. 2 OR BETTER.
2. ALL NAILING OF FRAMING LUMBER AND PLYWOOD SHALL BE AS PER THE 2012 IBC TABLE 2304.9.1, UNLESS NOTED OTHERWISE.
3. PROVIDE BRIDGING ON ALL SOLID SAWN RECTANGULAR LUMBER MEMBERS PER THE 2012 IBC SECTION 2308.8.5.
4. ALL PLYWOOD ROOF AND FLOOR DIAPHRAGMS AND SHEAR WALLS SHALL BE APA RATED STRUCTURAL SHEATHINGS WITH A SPAN INDEX RATING AND THICKNESS AS NOTED ON THE DRAWINGS.
5. ALL MEMBERS FRAMING INTO THE SIDE OF HEADERS OR STUD WALL SHALL BE ATTACHED USING METAL JOIST HANGERS (SIMPSON ITT OR AS NOTED ON DRAWINGS).
6. FRAMING CONNECTORS: ALL NOTATIONS REFER TO SIMPSON STRONG-TIE CONNECTORS. EQUIVALENT USP CONNECTORS ARE ACCEPTABLE. USE OF OTHER MANUFACTURERS CONNECTORS IS SUBJECT TO REVIEW AND APPROVAL BY THE ENGINEER.
7. ALL BOLTS FOR CONNECTIONS SHALL HAVE WASHERS PLACED UNDER NUTS AND HEADS. BOLT HOLES TO BE DRILLED 1/16 " LARGER THAN BOLT DIAMETER.
8. ALL FASTENERS, INCLUDING NUTS AND WASHERS INSTALLED IN PRESERVATIVE TREATED WOOD OR FIRE TREATED WOOD SHALL BE HOT-DIPPED ZINC COATED GALVANIZED STEEL, STAINLESS STEEL, SILICON BRONZE, OR COPPER. THESE FASTENERS SHALL MEET THE REQUIREMENTS OF 2012 IBC SECTION 2304.9.5. EXCEPTION: PLAIN CARBON STEEL FASTENERS, INCLUDING NUTS AND WASHERS IN SBX / DOT AND ZINC BORATE PRESERVATIVE TREATED WOOD IN AN INTERIOR, DRY ENVIRONMENT SHALL BE PERMITTED PER 2012 IBC SECTION 2304.9.5.1.

STRUCTURAL GLUED LAMINATED TIMBER

1. STRUCTURAL GLUED LAMINATED TIMBER OF SOFTWOOD SPECIES SHALL BE IN CONFORMANCE WITH ANSI STANDARD A190.1, AMERICAN NATIONAL STANDARD FOR STRUCTURAL GLUED LAMINATED TIMBER, OR OTHER CODE-APPROVED DESIGN, MANUFACTURING AND/OR QUALITY ASSURANCE PROCEDURES. MEMBERS SHALL BE MARKED WITH THE ENGINEERED WOOD SYSTEMS APA EWS TRADEMARK INDICATING CONFORMANCE WITH THE MANUFACTURING, QUALITY ASSURANCE AND MARKING PROVISIONS OF ANSI STANDARD A190.1.

   EXTREME FIBER IN BENDING:
   - TENSION ZONE IN TENSION, ALL BEAMS = 2400 psi
   - COMPRESSION ZONE IN TENSION, SIMPLE SPAN BEAMS = 1850 psi
   - COMPRESSION ZONE IN TENISION, CONTINUOUS & CANTILEVER BEAMS = 2400 psi
   - COMPRESSION PREPENDICULAR TO GRAIN TENSION & COMPRESSION FACE = 650 psi
   - HORIZONTAL SHEAR STRESS = 240 psi
   - MOE = 1,800,000 psi

ENGINEERED WOOD I-JOISTS

1. I-JOISTS SHALL BE MARKED WITH THE APA PRI TRADEMARK INDICATION CONFORMANCE WITH THE MANUFACTURING QUALITY ASSURANCE, AND MARKING PROVISIONS OF APA EWS STANDARD PRI-400, PERFORMANCE STANDARD FOR APA EWS I-JOISTS. APPROVED EQUALS MAY ALSO BE USED.

WOOD STRUCTURAL PANEL SHEATHING

1. ALL WOOD STRUCTURAL PANELS SHALL BE IDENTIFIED WITH THE APPROPRIATE TRADEMARK OF APA AND SHALL MEET THE REQUIREMENTS OF THE LATEST EDITION OF VOLUNTARY PRODUCT STANDARD PS 1, VOLUNTARY PRODUCT STANDARD PS 2, OR APA PRP-108 PERFORMANCE STANDARDS. PANEL THICKNESS, GRADE AND GROUP NUMBER OR SPAN RATING SHALL BE AT LEAST EQUAL TO THAT SHOWN ON THE DRAWINGS. APPLICATIONS SHALL BE IN ACCORDANCE WITH RECOMMENDATIONS OF APA.

PRE-ENGINEERED OPEN-WEB WOOD TRUSSES

1. THIS WORK INCLUDES THE COMPLETE FURNISHINGS AND INSTALLATION OF PRE-ENGINEERED OPEN WEB WOOD TRUSSES USING "STANDARD STRUCTURES INC. OPEN WEB TRUSSES" (OR EQUAL) AS SHOWN ON THE DRAWINGS HEREIN SPECIFIED AND NECESSARY TO COMPLETE THE WORK. THESE PRODUCTS SHALL BE DESIGNED AND MANUFACTURED TO THE STAND

SPECIAL INSPECTION

SPECIAL INSPECTIONS:

1. SPECIAL INSPECTIONS ARE REQUIRED AS DESCRIBED IN CHAPTER 17 OF THE 2012 IBC. THE OWNER, OR OWNER'S AGENT, SHALL EMPLOY ONE OR MORE APPROVED AGENCIES TO PERFORM INSPECTIONS DURING CONSTRUCTION ON THE TYPES OF WORK LISTED IN SECTION 1705 IN ADDITION TO THE INSPECTIONS IDENTIFIED IN SECTION 110 UNLESS WAIVED BY THE BUILDING OFFICIAL.

2. THE SPECIAL INSPECTION REQUIREMENTS OF THIS SECTION OF THE GENERAL STRUCTURAL NOTES SERVE AS THE ENGINEER OF RECORD'S STATEMENT OF SPECIAL INSPECTIONS REQUIRED BY CHAPTER 17 OF THE 2012 IBC.

SPECIAL INSPECTOR QUALIFICATIONS & RESPONSIBILITIES:

1. EACH SPECIAL INSPECTOR SHALL PROVIDE WRITTEN DOCUMENTATION TO THE BUILDING OFFICIAL DEMONSTRATING THEIR COMPETENCE, EXPERIENCE AND TRAINING.

2. SPECIAL INSPECTORS SHALL KEEP RECORDS OF ALL INSPECTIONS. THE SPECIAL INSPECTOR SHALL FURNISH INSPECTION REPORTS TO THE OWNER, CONTRACTOR, BUILDING OFFICIAL AND THE ARCHITECT/ ENGINEER OF RECORD.
   A. INSPECTION REPORTS SHALL INDICATE THAT WORK INSPECTED WAS OR WAS NOT COMPLETED IN CONFORMANCE TO THE APPROVED CONSTRUCTION DOCUMENTS AND GOVERNING BUILDING CODE.
   B. ANY DISCREPANCIES SHALL BE BROUGHT TO THE IMMEDIATE ATTENTION OF THE CONTRACTOR FOR CORRECTION.
   C. ANY DISCREPANCIES THAT ARE NOT CORRECTED SHALL BE BROUGHT TO THE ATTENTION OF THE BUILDING OFFICIAL AND THE ARCHITECT/ENGINEER OF RECORD PRIOR TO COMPLETION OF THAT PHASE OF WORK.
   D. A FINAL SIGNED REPORT DOCUMENTING ALL REQUIRED SPECIAL INSPECTIONS AND CORRECTION OF ANY DISCREPANCIES NOTED IN THE INSPECTIONS SHALL BE SUBMITTED TO THE BUILDING OFFICIAL AND ARCHITECT/ENGINEER OF RECORD AT A POINT IN TIME AGREED UPON PRIOR TO THE START OF WORK.

CONTRACTOR RESPONSIBILITIES:

1. EACH CONTRACTOR RESPONSIBLE FOR THE CONSTRUCTION OF A MAIN WIND/SEISMIC FORCE RESISTING SYSTEM, DESIGNATED WIND/SEISMIC SYSTEM, OR A WIND/SEISMIC FORCE RESISTING COMPONENT SHALL SUBMIT A WRITTEN STATEMENT OF RESPONSIBILITY TO THE BUILDING OFFICIAL AND THE OWNER PRIOR TO THE COMMENCEMENT OF WORK ON THAT SYSTEM OR COMPONENT. THIS STATEMENT SHALL CONTAIN ACKNOWLEDGEMENT OF AWARENESS OF THE SPECIAL INSPECTION REQUIREMENTS.

2. THE CONTRACTOR SHALL COORDINATE AND COOPERATE WITH ALL REQUIRED INSPECTIONS, TESTING AND STRUCTURAL OBSERVATIONS. THE CONTRACTOR SHALL NOT PROCEED WITH SUBSEQUENT WORK UNTIL REQUIRED INSPECTIONS, TESTING AND STRUCTURAL OBSERVATIONS HAVE BEEN COMPLETED.

3. ALL WORK REQUIRING SPECIAL INSPECTION SHALL REMAIN ACCESSIBLE AND EXPOSED UNTIL COMPLETION OF THE REQUIRED SPECIAL INSPECTIONS.

4. THE CONTRACTOR SHALL NOTIFY THE ENGINEER OF RECORD AT LEAST (2) DAYS PRIOR TO ANY REQUIRED STRUCTURAL OBSERVATIONS.

SPECIAL INSPECTION OF FABRICATORS:

1. ALL FABRICATION OF STRUCTURAL LOAD-BEARING MEMBERS AND ASSEMBLIES PERFORMED OFFSITE SHALL BE SPECIAL INSPECTED PER SECTION 1704.2.5 EXCEPT WORK PERFORMED BY FABRICATORS REGISTERED AND APPROVED TO PERFORM SUCH WORK WITHOUT SPECIAL INSPECTION PER SECTION 1704.2.5.2.

2. THE APPROVED FABRICATOR SHALL SUBMIT A CERTIFICATE OF COMPLIANCE TO THE BUILDING OFFICIAL AT THE COMPLETION OF FABRICATION STATING THE WORK WAS PERFORMED IN ACCORDANCE WITH THE APPROVED CONSTRUCTION DOCUMENTS.

STRUCTURAL OBSERVATIONS:

1. STRUCTURAL OBSERVATIONS ARE NOT REQUIRED FOR THIS PROJECT. HOWEVER, STRUCTURAL OBSERVATIONS MAY BE PERFORMED BY A REPRESENTATIVE FROM ENSIGN ENGINEERING AS DEEMED NECESSARY.

REQUIRED SPECIAL INSPECTION OR TESTING:

THE FOLLOWING MATERIALS, SYSTEMS AND COMPONENTS REQUIRE SPECIAL INSPECTION OR TESTING PER CHAPTER 17 OF THE 2012 IBC:

1. STRUCTURAL STEEL (SECTION 1705.2.1):
   A. THE FABRICATOR OR ERECTOR SHALL SUBMIT THE DOCUMENTS LISTED IN SECTION N3 OF AISC 360 FOR REVIEW BY THE ENGINEER OF RECORD.
   B. QUALITY ASSURANCE (QA) SHALL BE PROVIDED BY OTHERS WHEN REQUIRED BY THE AUTHORITY HAVING JURISDICTION (AHJ), APPLICABLE BUILDING CODE (ABC), PURCHASER, OWNER, OR ENGINEER OF RECORD.
   C. QA INSPECTION OF FABRICATED ITEMS SHALL BE MADE AT THE FABRICATOR'S PLANT. THE QUALITY ASSURANCE INSPECTOR (QAI) SHALL SCHEDULE THIS WORK TO MINIMIZE INTERRUPTION TO THE WORK OF THE FABRICATOR.
   D. QA INSPECTION OF THE ERECTED STEEL SYSTEM SHALL BE MADE AT THE PROJECT SITE. THE QAI SHALL SCHEDULE THIS WORK TO MINIMIZE INTERRUPTION TO THE WORK OF THE ERECTOR.
   E. THE QAI SHALL REVIEW THE MATERIAL TEST REPORTS AND CERTIFICATIONS LISTED IN SECTION N3.2 OF AISC 360 FOR COMPLIANCE WITH THE CONSTRUCTION DOCUMENTS.
   F. THE QAI SHALL BE ON THE PREMISES FOR INSPECTION DURING THE PLACEMENT OF ANCHOR RODS AND OTHER EMBEDMENTS SUPPORTING STRUCTURAL STEEL FOR COMPLIANCE WITH THE CONSTRUCTION DOCUMENTS. AS A MINIMUM, THE DIAMETER, GRADE, TYPE AND LENGTH OF THE ANCHOR ROD OR EMBEDDED ITEM, AND THE EXTENT OR DEPTH OF EMBEDMENT INTO THE CONCRETE, SHALL BE VERIFIED PRIOR TO PLACEMENT OF CONCRETE.
   G. THE QAI SHALL INSPECT THE FABRICATED STEEL OR ERECTED STEEL FRAME, AS APPROPRIATE, TO VERIFY COMPLIANCE WITH THE DETAILS SHOWN ON THE CONSTRUCTION DOCUMENTS, SUCH AS BRACES, STIFFENERS, MEMBER LOCATIONS AND PROPER APPLICATION OF JOINT DETAILS AT EACH CONNECTION.
   H. QA INSPECTIONS, EXCEPT NONDESTRUCTIVE TESTING (NDT), MAY BE WAIVED WHEN THE WORK IS PERFORMED IN A FABRICATING SHOP OR BY AN ERECTOR APPROVED BY THE AHJ TO PERFORM THE WORK WITHOUT QA. NDT OF WELDS COMPLETED IN AN APPROVED FABRICATOR'S SHOP MAY BE PERFORMED BY THAT FABRICATOR WHEN APPROVED BY THE AHJ. WHEN THE FABRICATOR PERFORMS THE NDT, THE QA AGENCY SHALL REVIEW THE FABRICATOR'S NDT REPORTS.
   I. AT COMPLETION OF FABRICATION, THE APPROVED FABRICATOR SHALL SUBMIT A CERTIFICATE OF COMPLIANCE TO THE AHJ STATING THAT THE MATERIALS SUPPLIED AND WORK PERFORMED BY THE FABRICATOR ARE IN ACCORDANCE WITH THE CONSTRUCTION DOCUMENTS. AT COMPLETION OF ERECTION, THE APPROVED ERECTOR SHALL SUBMIT A CERTIFICATE OF COMPLIANCE TO THE AHJ STATING THAT THE MATERIAL SUPPLIED AND WORK PERFORMED BY THE ERECTOR ARE IN ACCORDANCE WITH THE CONSTRUCTION DOCUMENTS.
   J. IDENTIFICATION AND REJECTION OF MATERIAL OR WORKMANSHIP THAT IS NOT IN CONFORMANCE WITH THE CONSTRUCTION DOCUMENTS SHALL BE PERMITTED AT ANY TIME DURING THE PROGRESS OF THE WORK. HOWEVER, THIS PROVISION SHALL NOT RELIEVE THE OWNER OR THE INSPECTOR OF THE OBLIGATION FOR TIMELY, IN-SEQUENCE INSPECTIONS. NONCONFORMING MATERIAL AND WORKMANSHIP SHALL BE BROUGHT TO THE IMMEDIATE ATTENTION OF THE FABRICATOR OR ERECTOR, AS APPLICABLE.
   K. NONCONFORMING MATERIAL OR WORKMANSHIP SHALL BE BROUGHT TO CONFORMANCE, OR MADE SUITABLE FOR ITS INTENDED PURPOSE AS DETERMINED BY THE ENGINEER OF RECORD.
   L. CONCURRENT WITH THE SUBMITTAL OF SUCH REPORTS TO THE AHJ, ENGINEER OF RECORD OR OWNER, THE QA AGENCY SHALL SUBMIT TO THE FABRICATOR AND ERECTOR:
      a. NONCONFORMANCE REPORTS.
      b. REPORTS OF REPAIR, REPLACEMENT OR ACCEPTANCE OF NONCONFORMING ITEMS.
   M. QA INSPECTION TASKS SHALL BE PERFORMED BY THE QAI IN ACCORDANCE WITH THE STRUCTURAL STEEL SPECIAL INSPECTION TABLE, AS A MINIMUM. SEE SHEET S0.1.

2. STEEL CONSTRUCTION OTHER THAN STRUCTURAL STEEL (SECTION 1705.2.2):
   A. SPECIAL INSPECTION FOR STEEL CONSTRUCTION OTHER THAN STRUCTURAL STEEL SHALL BE IN ACCORDANCE WITH THE STEEL CONSTRUCTION OTHER THAN STRUCTURAL STEEL SPECIAL INSPECTION TABLE (SEE SHEET S0.1) AND THE FOLLOWING:
      a. COLD-FORMED STEEL: WELDING INSPECTION AND WELDING INSPECTOR QUALIFICATIONS FOR COLD-FORMED STEEL FLOOR AND ROOF DECKS SHALL BE IN ACCORDANCE WITH AWS D1.3 AND SECTION 1705 OF THE 2012 IBC.
      b. REINFORCING STEEL: WELDING INSPECTION AND WELDING INSPECTOR QUALIFICATIONS FOR REINFORCING STEEL SHALL BE IN ACCORDANCE WITH AWS D1.4, ACI 318 AND SECTION 1705 OF THE 2012 IBC.
   B. SEE TABLE 1705.2.2 OF THE 2012 IBC FOR APPLICABLE REFERENCE STANDARDS.

SPECIAL INSPECTION (CONTINUED)

REQUIRED SPECIAL INSPECTION OR TESTING (CONTINUED):

3. CONCRETE CONSTRUCTION (SECTION 1705.3):
   A. SPECIAL INSPECTION AND VERIFICATIONS FOR CONCRETE CONSTRUCTION SHALL BE IN ACCORDANCE WITH THE CONCRETE CONSTRUCTION SPECIAL INSPECTION TABLE (SEE SHEET S0.1).
   B. SEE TABLE 1705.3 OF THE 2012 IBC FOR APPLICABLE REFERENCE STANDARDS.
   C. IN THE ABSENCE OF SUFFICIENT DATA OR DOCUMENTATION PROVIDING EVIDENCE OF CONFORMANCE TO QUALITY STANDARDS FOR MATERIAL IN CHAPTER 3 OF ACI 318, THE BUILDING OFFICIAL SHALL REQUIRE TESTING OF MATERIALS IN ACCORDANCE WITH THE APPROPRIATE STANDARDS AND CRITERIA FOR THE MATERIAL IN CHAPTER 3 OF ACI 318.

4. MASONRY CONSTRUCTION (SECTION 1705.4):
   A. THE QUALITY ASSURANCE PROGRAM SHALL BE IN ACCORDANCE WITH THE MASONRY CONSTRUCTION SPECIAL INSPECTION TABLE (SEE SHEET S0.1).

5. WOOD CONSTRUCTION (SECTION 1705.5):
   A. SPECIAL INSPECTIONS OF THE FABRICATION PROCESS OF PREFABRICATED WOOD STRUCTURAL ELEMENTS AND ASSEMBLIES SHALL BE IN ACCORDANCE WITH SECTION 1704.2.5 OF THE 2012 IBC AND THE SPECIAL INSPECTION OF FABRICATORS SECTION OF THE SPECIAL INSPECTION GENERAL STRUCTURAL NOTES.
   B. SPECIAL INSPECTIONS OF SITE-BUILT ASSEMBLIES SHALL BE IN ACCORDANCE WITH THE WOOD CONSTRUCTION SPECIAL INSPECTION TABLE (SEE SHEET S0.1) AND THE FOLLOWING:
      a. METAL-PLATE-CONNECTED WOOD TRUSS SPANNING 60 FEET OR GREATER: WHERE A TRUSS CLEAR SPAN IS 60 FEET OR GREATER, THE SPECIAL INSPECTOR SHALL VERIFY THAT THE TEMPORARY INSTALLATION RESTRAINT/ BRACING AND THE PERMANENT INDIVIDUAL TRUSS MEMBER RESTRAINT/BRACING ARE INSTALLED IN ACCORDANCE WITH THE APPROVED TRUSS SUBMITTAL PACKAGE.

6. SOILS (SECTION 1705.6):
   A. SPECIAL INSPECTION OF EXISTING SITE SOIL CONDITIONS, FILL PLACEMENT AND LOAD-BEARING REQUIREMENTS SHALL BE IN ACCORDANCE WITH THE SOILS SPECIAL INSPECTION TABLE (SEE SHEET S0.1) AND THE FOLLOWING:
      a. THE APPROVED GEOTECHNICAL REPORT AND APPROVED CONSTRUCTION DOCUMENTS SHALL BE USED TO DETERMINE COMPLIANCE.
      b. DURING FILL PLACEMENT, THE SPECIAL INSPECTOR SHALL DETERMINE THAT PROPER MATERIALS AND PROCEDURES ARE USED IN ACCORDANCE WITH THE PROVISIONS OF THE APPROVED GEOTECHNICAL REPORT.
      c. WHERE A GEOTECHNICAL REPORT IS NOT PROVIDED, THE SPECIAL INSPECTOR SHALL VERIFY THAT THE IN-PLACE DRY DENSITY OF THE COMPACTED FILL IS NOT LESS THAN 90 PERCENT OF THE MAXIMUM DRY DENSITY AT OPTIMUM MOISTURE CONTENT DETERMINED IN ACCORDANCE WITH ASTM D 1557.

7. SPECIAL INSPECTION FOR WIND-RESISTANCE (SECTION 1705.10):
   A. PERIODIC SPECIAL INSPECTION IS REQUIRED FOR THE FOLLOWING SYSTEMS AND COMPONENTS:
      a. ROOF CLADDING
      b. WALL CLADDING

8. SPECIAL INSPECTION FOR SEISMIC-RESISTANCE (SECTION 1705.11):
   A. DESIGNATED SEISMIC SYSTEMS:
      a. THE SPECIAL INSPECTOR SHALL EXAMINE DESIGNATED SEISMIC SYSTEMS REQUIRING SEISMIC QUALIFICATION IN ACCORDANCE WITH SECTION 1705.12.3 OF THE 2012 IBC AND VERIFY THAT THE LABEL, ANCHORAGE OR MOUNTING CONFORMS TO THE CERTIFICATE OF COMPLIANCE.
      b. DESIGNATED SEISMIC SYSTEMS INCLUDE ALL NONSTRUCTURAL COMPONENTS DESIGNED IN ACCORDANCE WITH CHAPTER 13 OF ASCE 7 AND FOR WHICH THE COMPONENT IMPORTANCE FACTOR, Ip, IS GREATER THAN 1.0 IN ACCORDANCE WITH SECTION 13.1.3 OF ASCE 7.
   B. ARCHITECTURAL COMPONENTS: PERIODIC SPECIAL INSPECTION IS REQUIRED DURING THE ERECTION AND FASTENING OF EXTERIOR CLADDING, INTERIOR AND EXTERIOR NON-BEARING WALLS AND INTERIOR AND EXTERIOR VENEER.
   C. MECHANICAL AND ELECTRICAL COMPONENTS: SPECIAL INSPECTION FOR MECHANICAL AND ELECTRICAL COMPONENTS SHALL BE PERFORMED IN ACCORDANCE WITH SECTION 1705.11.6 OF THE 2012 IBC.
   D. STORAGE RACKS: PERIODIC SPECIAL INSPECTION IS REQUIRED DURING THE ANCHORAGE OF STORAGE RACKS 8 FEET OR GREATER IN HEIGHT.

9. TESTING AND QUALIFICATION FOR SEISMIC RESISTANCE (SECTION 1705.12):
   A. CONCRETE REINFORCEMENT: WHERE REINFORCEMENT COMPLYING WITH ASTM A 615 IS USED TO RESIST EARTHQUAKE-INDUCED FLEXURAL AND AXIAL FORCES IN SPECIAL MOMENT FRAMES, SPECIAL STRUCTURAL WALLS AND COUPLING BEAMS CONNECTING SPECIAL STRUCTURAL WALLS, THE REINFORCEMENT SHALL COMPLY WITH SECTION 21.1.5.1 OF ACI 318. CERTIFIED MILL TEST REPORTS SHALL BE PROVIDED FOR EACH SHIPMENT OF SUCH REINFORCEMENT. WHERE REINFORCEMENT COMPLYING WITH ASTM A 615 IS TO BE WELDED, CHEMICAL TESTS SHALL BE PERFORMED TO DETERMINE WELDABILITY IN ACCORDANCE WITH SECTION 3.5.2 OF ACI 318.
   B. SEE MANUFACTURER'S SEISMIC CERTIFICATION OF COMPLIANCE FOR NON-STRUCTURAL COMPONENTS PER SECTION 1705.12.3 OF THE 2012 IBC.

DEFINITIONS:

1. THE FOLLOWING DEFINITIONS APPLY TO ALL SPECIAL INSPECTION TABLES (WHERE APPLICABLE) UNLESS SPECIFICALLY NOTED OTHERWISE:
   A. CONTINUOUS – FULL-TIME OBSERVATION OF WORK REQUIRING SPECIAL INSPECTION BY AN APPROVED SPECIAL INSPECTOR.
   B. PERIODIC – AN APPROVED SPECIAL INSPECTOR MUST OBSERVE THE WORK REQUIRING SPECIAL INSPECTION PRIOR TO COMMENCEMENT OF WORK, INTERMITTENTLY DURING THE WORK, AND AT COMPLETION OF THE WORK.

SOIL SPECIAL INSPECTION PER SECTION 1705.6 OF IBC 2012

VERIFICATION AND INSPECTION	CONTINUOUS	PERIODIC
VERIFY MATERIALS BELOW SHALLOW FOUNDATIONS ARE ADEQUATE TO ACHIEVE DESIGN BEARING CAPACITY		X
VERIFY EXCAVATIONS ARE EXTENDED TO PROPER DEPTH AND HAVE REACHED PROPER MATERIAL		X
PERFORM CLASSIFICATION AND TESTING OF COMPACTED FILL MATERIALS		X
VERIFY USE OF PROPER MATERIALS, DENSITIES, AND LIFT THICKNESSES DURING PLACEMENT AND COMPACTION OF COMPACTED FILL	X	
PRIOR TO PLACEMENT OF COMPACTED FILL, OBSERVE SUBGRADE AND VERIFY SITE HAS BEEN PREPARED PROPERLY		X

CONCRETE CONSTRUCTION SPECIAL INSPECTION PER SECTION 1705.3 OF IBC 2012

VERIFICATION AND INSPECTION	CONTINUOUS	PERIODIC
REINFORCING STEEL, INCLUDING PRE-STRESSING TENDONS AND PLACEMENT		X
WELDING OF REINFORCING STEEL:		
VERIFICATION OF WELDABILITY OF REINFORCING STEEL OTHER THAN ASTM A706		X
REINFORCING STEEL RESISTING FLEXURAL AND AXIAL FORCES IN INTERMEDIATE AND SPECIAL MOMENT FRAMES, AND BOUNDARY ELEMENTS OF SPECIAL STRUCTURAL WALLS OF CONCRETE AND SHEAR REINFORCEMENT	X	
SHEAR REINFORCEMENT	X	
OTHER REINFORCING STEEL		X
CAST-IN-PLACE ANCHORS		X
POST-INSTALLED ANCHORS AND / OR DOWELS (NOTE 1)		X
USE OF REQUIRED MIX DESIGN		X
CONCRETE SAMPLING FOR STRENGTH TESTS, SLUMP, AIR CONTENT, AND TEMPERATURE	X	
CONCRETE AND SHOTCRETE PLACEMENT FOR PROPER APPLICATION TECHNIQUES	X	
MAINTENANCE OF SPECIFIED CURING TEMPERATURE AND TECHNIQUES		X
PRE-STRESSED CONCRETE	X	
ERECTION OF PRE-CAST CONCRETE		X
IN-SITU CONCRETE STRENGTH		X
FORMWORK FOR SHAPE, LOCATION, AND DIMENSIONS OF CONCRETE MEMBER BEING FORMED		X

NOTES:

1. ALL POST-INSTALLED ANCHORS AND / OR DOWELS SHALL BE SPECIALLY INSPECTED AS REQUIRED BY THE APPROVED ICC-ES REPORT.

WOOD CONSTRUCTION SPECIAL INSPECTION PER SECTION 1705.5 OF IBC 2012

VERIFICATION AND INSPECTION	CONTINUOUS	PERIODIC
DIAPHRAGMS:		
WOOD STRUCTURAL PANEL SHEATHING (GRADE / THICKNESS)		X
NOMINAL SIZE OF FRAMING MEMBERS AT ADJOINING PANEL EDGES		X
NAIL OR STAPLE DIAMETER AND LENGTH		X
NUMBER OF FASTENER LINES		X
SPACING BETWEEN FASTENERS IN EACH LINE AND AT EDGE MARGINS		X
FIELD GLUING OPERATIONS OF WOOD SHEAR WALLS, WOOD DIAPHRAGMS, DRAG STRUTS, BRACES, AND HOLD-DOWNS	X	
NAILING, BOLTING, ANCHORING, AND OTHER FASTENING COMPONENTS WITHIN THE FOLLOWING ELEMENTS: WOOD SHEAR WALLS, WOOD DIAPHRAGMS, DRAG STRUTS, BRACES, AND HOLD-DOWNS		X

NOTES:

1. SPECIAL INSPECTION IS NOT REQUIRED FOR WOOD SHEAR WALLS, SHEAR PANELS AND DIAPHRAGMS, INCLUDING NAILING, BOLTING, ANCHORING AND OTHER FASTENING TO OTHER COMPONENTS OF THE WOOD SHEAR WALLS, SHEAR PANELS AND DIAPHRAGMS WHERE THE FASTENER SPACING OF THE SHEATHING IS MORE THAN 4 INCHES ON CENTER.

STRUCTURAL STEEL SPECIAL INSPECTION OF BOLTED CONNECTIONS PER SECTION 1705.2.1 OF IBC 2012

INSPECTION TASKS PRIOR TO BOLTING (AISC 360, TABLE N5.6-1)	QA
MANUFACTURER'S CERTIFICATIONS AVAILABLE FOR FASTENER MATERIALS	P
FASTENERS MARKED IN ACCORDANCE WITH ASTM REQUIREMENTS	O
PROPER FASTENERS SELECTED FOR THE JOINT DETAIL (GRADE, TYPE, BOLT LENGTH IF THREADS ARE TO BE EXCLUDED FROM SHEAR PLANE)	O
PROPER BOLTING PROCEDURE SELECTED FOR JOINT DETAIL	O
CONNECTING ELEMENTS, INCLUDING THE APPROPRIATE FAYING SURFACE CONDITION AND HOLE PREPARATION, IF SPECIFIED, MEET APPLICABLE REQUIREMENTS	O
PRE-INSTALLATION VERIFICATION TESTING BY INSTALLATION PERSONNEL OBSERVED AND DOCUMENTED FOR FASTENER ASSEMBLIES AND METHODS USED	O
PROPER STORAGE PROVIDED FOR BOLTS, NUTS, WASHERS, & OTHER FASTENER COMPONENTS	O
INSPECTION TASKS DURING BOLTING (AISC 360, TABLE N5.6-2)	**QA**
FASTENER ASSEMBLIES, OF SUITABLE CONDITION, PLACED IN ALL HOLES AND WASHERS (IF REQUIRED) ARE POSITIONED AS REQUIRED	O
JOINT BROUGHT TO THE SNUG-TIGHT CONDITION PRIOR TO THE PRE-TENSIONING OPERATION	O
FASTENER COMPONENT NOT TURNED BY THE WRENCH PREVENTED FROM ROTATING	O
FASTENERS ARE PRE-TENSIONED IN ACCORDANCE WITH THE RCSC SPECIFICATION, PROGRESSING SYSTEMATICALLY FROM THE MOST RIGID POINT TOWARD THE FREE EDGES	O
INSPECTION TASKS AFTER BOLTING (AISC 360, TABLE N5.6-3)	**QA**
DOCUMENT ACCEPTANCE OR REJECTION OF BOLTED CONNECTIONS	P

NOTES:

1. QUALITY ASSURANCE (QA) BOLTING INSPECTORS SHALL BE QUALIFIED ON THE BASIS OF DOCUMENTED TRAINING AND EXPERIENCE IN STRUCTURAL BOLTING EXPERIENCE.

2. OBSERVATION OF BOLTING OPERATIONS SHALL BE THE PRIMARY METHOD USED TO CONFIRM THAT THE MATERIALS, PROCEDURES, AND WORKMANSHIP INCORPORATED IN CONSTRUCTION ARE IN CONFORMANCE WITH THE CONSTRUCTION DOCUMENTS AND THE PROVISIONS OF THE RCSC SPECIFICATION.

3. FOR SNUG-TIGHT JOINTS, PRE-INSTALLATION VERIFICATION TESTING AS SPECIFIED IN TABLE N5.6-1 AND MONITORING OF THE INSTALLATION PROCEDURES AS SPECIFIED IN TABLE N5.6-2 ARE NOT APPLICABLE. THE QAI NEED NOT BE PRESENT DURING THE INSTALLATION OF FASTENERS IN SNUG-TIGHT JOINTS.

4. FOR PRE-TENSIONED JOINTS AND SLIP-CRITICAL JOINTS, WHEN THE INSTALLER IS USING THE TURN-OF-NUT METHOD WITH MATCHMARKING TECHNIQUES, THE DIRECT-TENSION-INDICATOR METHOD, OR THE TWIST-OFF-TYPE TENSION CONTROL BOLT METHOD, MONITORING OF BOLT PRE-TENSIONING PROCEDURES SHALL BE AS SPECIFIED IN TABLE N5.6-2. THE QAI NEED NOT BE PRESENT DURING THE INSTALLATION OF FASTENERS WHEN THESE METHODS ARE USED BY THE INSTALLER.

5. FOR PRE-TENSIONED JOINTS AND SLIP-CRITICAL JOINTS, WHEN THE INSTALLER IS USING THE CALIBRATED WRENCH METHOD OR THE TURN-OF-NUT METHOD WITHOUT MATCHMARKING, MONITORING OF BOLT PRE-TENSIONING PROCEDURES SHALL BE AS SPECIFIED IN TABLE N5.6-2. THE QAI SHALL BE ENGAGED IN THEIR ASSIGNED INSPECTION DUTIES DURING INSTALLATION OF FASTENERS WHEN THESE METHODS ARE USED BY THE INSTALLER.

DEFINITIONS:

6. O – OBSERVE THESE ITEMS ON A RANDOM BASIS, DAILY BASIS. OPERATIONS NEED NOT BE DELAYED PENDING THESE INSPECTIONS.

7. P – PERFORM TASK FOR EACH WELDED JOINT OR MEMBER.

STRUCTURAL STEEL SPECIAL INSPECTION OF WELDED CONNECTIONS PER SECTION 1705.2.1 OF IBC 2012

INSPECTION TASKS PRIOR TO WELDING (AISC 360, TABLE N5.4-1)	QA
WELDING PROCEDURE SPECIFICATIONS (WPSs) AVAILABLE	P
MANUFACTURER CERTIFICATIONS FOR WELDING CONSUMABLE AVAILABLE	P
MATERIAL IDENTIFICATION (TYPE/GRADE)	O
WELDER IDENTIFICATION SYSTEM (NOTE 9)	O
FIT-UP OF GROOVE WELDS (INCLUDING JOINT GEOMETRY)	O
JOINT PREPARATION	
DIMENSIONS (ALIGNMENT, ROOT OPENING, ROOT FACE, BEVEL)	
CLEANLINESS (CONDITION OF STEEL SURFACES)	
TACKING (TACK WELD QUALITY AND LOCATION)	
BACKING TYPE AND FIT (IF APPLICABLE)	
CONFIGURATION AND FINISH OF ACCESS HOLES	O
FIT-UP OF FILLET WELDS	O
DIMENSIONS (ALIGNMENT, GAPS AT ROOT)	
CLEANLINESS (CONDITION OF STEEL SURFACES)	
TACKING (TACK WELD QUALITY AND LOCATION)	
INSPECTION TASKS DURING WELDING (AISC 360, TABLE N5.4-2)	**QA**
USE OF QUALIFIED WELDERS	O
CONTROL & HANDLING OF WELDING CONSUBABLES	O
PACKAGING	
EXPOSURE CONTROL	
NO WELDING OVER CRACKED TACK WELDS	O
ENVIRONMENTAL CONDITIONS	O
WIND SPEED WITHIN LIMITS	
PRECIPITATION AND TEMPERATURE	
WPS FOLLOWED	O
SETTINGS ON WELDING EQUIPMENT	
TRAVEL SPEED	
SELECTED WELDING MATERIALS	
SHIELDING GAS TYPE / FLOW RATE	
PREHEAT APPLIED	
INTERPASS TEMPERATURE MAINTAINED (MIN. / MAX.)	
PROPER POSITION (F, V, H, OH)	
WELDING TECHNIQUES	O
INTERPASS AND FINAL CLEANING	
EACH PASS WITHIN PROFILE LIMITATIONS	
EACH PASS MEETS QUALITY REQUIREMENTS	
INSPECTION TASKS AFTER WELDING (AISC 360, TABLE N5.4-3)	**QA**
WELDS CLEANED	O
SIZE, LENGTH, AND LOCATION OF WELDS	P
WELDS MEET VISUAL ACCEPTANCE CRITERIA	P
CRACK PROHIBITION	
WELD / BASE-METAL FUSION	
CRATER CROSS SECTION	
WELD PROFILES	
WELD SIZE	
UNDERCUT	
POROSITY	
ARC STRIKES	P
k-STRIKES (NOTE 10)	P
PLACEMENT OF REINFORCING OR CONTOURING FILLET WELDS (IF REQUIRED)	P
BACKING REMOVED, WELD TABS REMOVED (IF REQUIRED)	P
REPAIR ACTIVITIES	P
DOCUMENT ACCEPTANCE OR REJECTION OF WELDED JOINT OR MEMBER	P

NOTES:

1. QUALITY ASSURANCE (QA) WELDING INSPECTORS SHALL BE QUALIFIED IN ACCORDANCE WITH SECTION N4.2 OF AISC 360.

2. OBSERVATION OF WELDING OPERATIONS AND VISUAL INSPECTION OF IN-PROCESS AND COMPLETED WELDS SHALL BE THE PRIMARY METHOD TO CONFIRM THAT THE MATERIALS, PROCEDURES AND WORKMANSHIP ARE IN CONFORMANCE WITH THE CONSTRUCTION DOCUMENTS. FOR STRUCTURAL STEEL, ALL PROVISIONS OF AWS D1.1/D1.1M, STRUCTURAL WELDING CODE – STEEL, FOR STATICALLY LOADED STRUCTURES SHALL APPLY.

3. NON-DESTRUCTIVE TESTING (NDT) PERSONNEL SHALL BE QUALIFIED IN ACCORDANCE WITH SECTION N4.2 OF AISC 360.

4. NDT OF WELDED JOINTS SHALL COMPLY WITH SECTION N5.5 OF AISC 360.

5. ALL NDT PERFORMED SHALL BE DOCUMENTED. FOR SHOP FABRICATION, THE NDT REPORT SHALL IDENTIFY THE TESTED WELD BY PIECE MARK AND LOCATION IN THE PIECE. FOR FIELD WORK, THE NDT REPORT SHALL IDENTIFY THE TESTED WELD BY LOCATION IN THE STRUCTURE, PIECE MARK, AND LOCATION IN THE PIECE.

6. THE FABRICATOR OR ERECTOR, AS APPLICABLE, SHALL MAINTAIN A SYSTEM BY WHICH A WELDER WHO HAS WELDED A JOINT OR MEMBER CAN BE IDENTIFIED. STAMPS, IF USED, SHALL BE THE LOW-STRESS TYPE.

7. WHEN WELDING OF DOUBLER PLATES, CONTINUITY PLATES OR STIFFENERS HAS BEEN PERFORMED IN THE *k*-AREA, VISUALLY INSPECT THE WEB *k*-AREA FOR CRACKS WITHIN 3 INCHES OF THE WELD.

DEFINITIONS:

8. O – OBSERVE THESE ITEMS ON A RANDOM BASIS, DAILY BASIS. OPERATIONS NEED NOT BE DELAYED PENDING THESE INSPECTIONS.

9. P – PERFORM TASK FOR EACH WELDED JOINT OR MEMBER.

ENSIGN
THE STANDARD IN ENGINEERING

SALT LAKE CITY
45 W. 10000 S., Suite 500
Sandy, UT 84070
Phone: 801.255.0529

LAYTON
Phone: 801.547.1100

TOOELE
Phone: 435.843.3590

CEDAR CITY
Phone: 435.865.1453

RICHFIELD
Phone: 435.590.0187

WWW.ENSIGNENG.COM

CLIENT INFORMATION:
Owner

TENDER CARE HOSPICE ASSISTED LIVING FACILITY

5TH NORTH AND 1ST EAST STREET PRICE CITY, UTAH

PROFESSIONAL STRUCTURAL ENGINEER No. 175238 DAVID B. ALTER STATE OF UTAH
4/25/16

PERMIT 03/08/16

NO.	DATE	REVISION

SPECIAL INSPECTION

PROJECT NUMBER
6803
DATE
12-31-15
DRAWN BY
R. MALIGON
PROJECT ENGINEER
A. HAWKINS
PROJECT MANAGER
C. DUNCAN

S0.1

CONCRETE PEDESTAL SCHEDULE

TYPE	COLUMN		REBAR		COMMENTS
	COLUMN SIZE	SIZE	VERTICAL	TIES	
P-1	2'-0"	2'-0"	(12) #5	#3 @ 10"	-
P-2	8"	8"	(4) #4	#3 @ 8"	-

NOTES:

1. PROVIDE (3) #3 TIES IN THE TOP 5" OF PEDESTAL U.N.O.
2. PROVIDE ANCHORS PER COLUMN SCHEDULE. TIE IN PLACE. USE TEMPLATE.
3. PROVIDE #3 INTERMEDIATE TIES BETWEEN INTERMEDIATE BARS AS SHOWN.
4. PROVIDE (2) #3 TIES DIRECTLY AROUND ANCHOR HEADS.

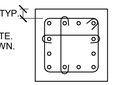

BUILT UP POST SCHEDULE

MARK	STUD SIZE	GRADE	TRIMMERS	BUILT-UP FASTENERS		
				SIZE	ROWS	SPACING
P1	2x4	STUD	(1)	-	-	-
P2	2x4	STUD	(2)	16d COMMON	2	4"
P3	2x4	STUD	(3)	16d COMMON	2	4"
P5	2x4	STUD	(5)	16d COMMON	2	4"
P6	2x6	STUD	(2)	16d COMMON	2	4"
P7	2x6	STUD	(3)	16d COMMON	2	4"
P8	2x6	STUD	(4)	16d COMMON	2	4"
P9	2x6	STUD	(5)	16d COMMON	2	4"

SOLID POST SCHEDULE

MARK	SIZE	GRADE	COMMENTS
P13	4x4	DFLN#1	-
P14	4x6	DFLN#1	-
P15	6x6	DFLN#1	-

NOTES:

1. PROVIDE KING STUDS BASED ON THE FOLLOWING CRITERIA:

   -EXTERIOR OPENINGS UP TO 5'-0" WIDE= (1) KING STUD
   -EXTERIOR OPENINGS UP TO 10'-0" WIDE= (2) KING STUDS
   -EXTERIOR OPENINGS UP TO 16'-0" WIDE= (3) KING STUDS
   -EXTERIOR OPENINGS MORE THAN 16'-0" WIDE= SEE PLANS
   -INTERIOR OPENINGS= (1) KING STUD
   -WHERE BEAM BEARS ABOVE WALL= (0) KING STUDS

2. PROVIDE TRIMMER STUDS PER POST SCHEDULE.
3. STAGGER ALL ROWS OF FASTENERS.
4. MINIMUM POST SIZE IS SPECIFIED IN BEAM SCHEDULES. ALTERNATE POST SIZE MAY BE REQUIRED ON PLANS.
5. ALL POSTS MAY NOT BE USED, SEE PLAN FOR REQUIREMENTS.

WALL STUD SCHEDULE

MARK	SIZE	GRADE	SPACING	COMMENTS
WS1	2 x 6	STUD	16" O.C.	TYP. AT ALL EXTERIOR WALLS, U.N.O.
WS2	2 x 4	STUD	16" O.C.	TYP. AT ALL INT. WALLS, U.N.O.

ANCHOR BOLT SCHEDULE

MARK	ANCHOR			SPACING	COMMENTS
	DIAMETER	LENGTH	GRADE		
AB1	5/8"	16" MIN.	A307	32"	TYPICAL U.N.O.

NOTES:

1. 3" x 3" x 0.229" PLATE WASHERS ON ALL ANCHOR BOLTS. EDGE OF WASHER MUST BE WITHIN 1/2" OF SHEARWALL SHEATHING.
2. 7" MIN. EMBEDMENT ON ALL ANCHOR BOLTS U.N.O.
3. (2) ANCHOR BOLTS MIN. PER SHEARWALL.
4. (1) BOLT NOT MORE THAN 12" FROM END OF SHEARWALL.
5. ALL ANCHOR BOLT TYPES MAY NOT BE USED, SEE PLAN FOR REQUIREMENTS.
6. ANCHOR BOLTS ARE TO BE 1 3/4" MIN. FROM EDGE OF CONCRETE.
7. ALL ANCHOR BOLTS ARE CAST-IN-PLACE U.N.O.
8. ANCHOR BOLTS ARE TO BE LOCATED NO CLOSER THAN 15 ANCHOR DIAMETERS AWAY FROM EDGE PERPENDICULAR TO SHEAR WALL.
9. WHERE (2) 2X SILL PLATES ARE USED ENSURE ANCHOR BOLT ARE LONG ENOUGH TO PLACE BOTH PLATES.

HOLDOWN SCHEDULE

MARK	REQUIRED HOLDOWN AND ATTACHMENT	MIN. POST	ANCHOR BOLT SIZE	ANCHOR BOLT EMBEDMENT	COMMENTS
▲	HDU8-SDS2.5 (20)	4 1/2"	7/8"	10 1/2" MIN.	SEE DTL. 16/S4.0
●	HTT5 W/ (26) 10d	3"	5/8"	9" MIN.	SEE DTL. 16/S4.0
◐	STHD10	3"	-	-	SEE DTL. 15/S4.0
◑	STHD14	3"	-	-	SEE DTL. 15/S4.0

NOTES:

1. INCREASE FOOTING DEPTH WHERE HOLDOWN OR ANCHOR BOLT EMBEDMENT + 3" IS GREATER THAN FOOTING DEPTH SPECIFIED.
2. SHEARWALL PANEL NAILING AT HARDWARE LOCATION IS 4" O.C. MIN.
3. INSET HOLDOWNS IN FOUNDATION FOR BRICK OR STONE AS REQUIRED.
4. ALL SPECIFIED HARDWARE IS SIMPSON STRONG-TIE.
5. INSTALL ALL HARDWARE PER MANUFACTURER'S SPECIFICATIONS.
6. CONTACT ENGINEER FOR ALL HARDWARE SUBSTITUTIONS.
7. FOR STEM WALL APPLICATIONS USE SIMPSON SB 5/8" x 24" EMBED 18" MIN. IN WALL FOR HTT4, HTT5, HDU5 HOLDOWNS.
8. MIN. ANCHOR BOLT STRENGTH IS ASTM F-1554 GRADE 36 U.N.O.
9. HDU'S ARE SHOWN W/ # OF SDS SCREWS PER HDU.
10. USE 4" MIN. END DISTANCE AT FOUNDATION BLOCKOUTS.

FOOTING SCHEDULE

MARK	WIDTH	LENGTH	THICKNESS	LONGITUDINAL REINF.				TRANSVERSE REINF.				COMMENTS
				NO.	SIZE	LENGTH	SPACING	NO.	SIZE	LENGTH	SPACING	
FS4.0	4'-0"	4'-0"	18"	5	#5	3'-6"	EVENLY	5	#5	3'-6"	EVENLY	TOP & BOTTOM

NOTES:

1. ALL REBAR GRADE 60.
2. LOCATE REBAR 3" CLEAR FROM BOTTOM OF FOOTING, UNLESS NOTED OTHERWISE.
3. ALL NEW FOOTINGS SHALL BE PLACED ON PROPERLY COMPACTED ENGINEERED FILL PER GEOTECHNICAL REPORT.
4. CONTRACTOR TO DETERMINE REQUIRED DEPTH OF FOOTING TO MEET FROST PROTECTION.
5. FOOTINGS HAVE BEEN DESIGNED FOR F'C = 2,500 PSI. NO SPECIAL INSPECTION IS REQUIRED

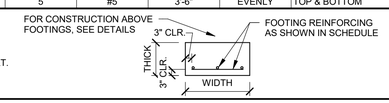

GRADE BEAM SCHEDULE

MARK	WIDTH	DEPTH	CONTINUOUS REINFORCEMENT	TIES
GB-1	10"	30"	(3) #5 TOP AND BOTTOM	#3 CLOSED-LOOP STIRRUPS @ 12" O.C. WITHIN 5'-0" OF EACH MICRO-PILE
GB-2	8"	18"	(3) #5 TOP AND BOTTOM	#3 CLOSED-LOOP STIRRUPS @ 8" O.C. WITHIN 3'-4" OF EACH PEDESTAL
GB-3	18"	30"	(5) #5 TOP AND BOTTOM	#3 CLOSED-LOOP STIRRUPS @ 12" O.C. WITHIN 5'-0" OF EACH MICRO-PILE

MICRO PILE SCHEDULE

MARK	DESIGN LOADS (KIPS)					COMMENTS
	DEAD	LIVE	SNOW	WIND	SEISMIC	
○ MP-45	27.2	10.0	9.2	4.4	4.0	
○ MP-30	15.0	6.5	6.0	4.4	4.0	

NOTES:

1. MICRO-PILE DESIGN BY GEOTECHNICAL ENGINEER. DESIGN SHALL BE REVIEWED BY E.O.R. FOR COMPLIANCE WITH STRUCTURAL DESIGN.

CONCRETE REINFORCING SPLICE LENGTH SCHEDULE

BAR SIZE	BAR DIAMETER (IN.)	f'c = 3,000 PSI				f'c = 3,500 PSI				f'c = 4,000 PSI				f'c = 5,000 PSI				f'c = 6,500 PSI			
		TYPICAL SPLICE (IN)		TOP BAR SPLICE (IN)		TYPICAL SPLICE (IN)		TOP BAR SPLICE (IN)		TYPICAL SPLICE (IN)		TOP BAR SPLICE (IN)		TYPICAL SPLICE (IN)		TOP BAR SPLICE (IN)		TYPICAL SPLICE (IN)		TOP BAR SPLICE (IN)	
		CLASS 'A'	CLASS 'B'	CLASS 'A'	CLASS 'B'	CLASS 'A'	CLASS 'B'	CLASS 'A'	CLASS 'B'	CLASS 'A'	CLASS 'B'	CLASS 'A'	CLASS 'B'	CLASS 'A'	CLASS 'B'	CLASS 'A'	CLASS 'B'	CLASS 'A'	CLASS 'B'	CLASS 'A'	CLASS 'B'
3	0.375	17	22	22	29	16	21	20	26	15	20	19	25	13	17	17	22	12	16	15	20
4	0.500	22	29	29	38	21	27	27	35	19	25	25	33	17	22	23	30	15	20	20	26
5	0.625	28	36	36	47	26	34	34	43	24	31	31	40	22	29	28	36	19	25	25	33
6	0.750	33	43	43	56	31	40	40	52	29	38	37	48	26	34	34	44	23	30	30	39
7	0.875	48	63	63	82	45	59	59	75	42	55	54	70	38	49	49	64	33	43	43	56
8	1.000	55	72	72	94	51	66	66	86	48	62	62	81	43	56	56	73	38	49	49	64
9	1.128	62	81	81	105	58	75	75	98	54	70	70	91	48	62	63	82	42	55	55	72
10	1.270	70	91	91	118	65	85	85	109	61	79	79	103	54	70	71	92	48	62	62	81
11	1.410	78	101	101	131	72	94	94	121	67	87	87	113	60	78	78	101	53	69	69	90

NOTES:

1. ALL LAP SPLICE LENGTHS ARE CLASS "A" UNLESS NOTED OTHERWISE ON PLANS.
2. HORIZONTAL BARS ARE CLASSIFIED AS TOP BARS WHERE 12" OR MORE OF FRESH CONCRETE IS CAST BELOW SPLICE.
3. FOR ALL EPOXY-COATED BARS, SPLICE LENGTHS SHALL BE MULTIPLIED BY:
   1.5 WHEN CLEAR COVER IS LESS THAN 3db AND CLEAR SPACING IS LESS THAN 6db, OR
   1.2 FOR ALL OTHER EPOXY-COATED BARS.
4. FOR ALL LIGHT-WEIGHT CONCRETE, SPLICE LENGTHS SHALL BE MULTIPLIED BY 1.33.

ENSIGN
THE STANDARD IN ENGINEERING

SALT LAKE CITY
45 W. 10000 S., Suite 500
Sandy, UT 84070
Phone: 801.255.0529

LAYTON
Phone: 801.547.1100

TOOELE
Phone: 435.843.3590

CEDAR CITY
Phone: 435.865.1453

RICHFIELD
Phone: 435.590.0187

WWW.ENSIGNENG.COM

CLIENT INFORMATION:
Owner

TENDER CARE HOSPICE ASSISTED LIVING FACILITY

5TH NORTH AND 1ST EAST STREET
PRICE CITY, UTAH

PERMIT 03/08/16

NO.	DATE	REVISION

STRUCTURAL SCHEDULES

PROJECT NUMBER
6803
DATE
12-31-15
DRAWN BY
R. MALIGON
PROJECT ENGINEER
A. HAWKINS
PROJECT MANAGER
C. DUNCAN

S0.2

SHEARWALL SCHEDULE

MARK	SHEATHING THICKNESS	SHEATHING TYPE	SHEATHING # OF SIDES	PANEL EDGE FASTENERS SIZE	PANEL EDGE FASTENERS SPACING	PANEL FIELD FASTENER REQUIREMENT SIZE	PANEL FIELD FASTENER REQUIREMENT SPACING	PANEL FIELD FASTENER REQUIREMENT SIZE	PANEL FIELD FASTENER REQUIREMENT SPACING	PANEL FIELD FASTENER REQUIREMENT SIZE	PANEL FIELD FASTENER REQUIREMENT SPACING	SOLE PLATE SIZE	SOLE PLATE NAILING (SEE NOTE 12) EXT./CONT. SHEATHING	SOLE PLATE NAILING (SEE NOTE 12) PARTY WALL/DISCONTINUOUS SHEATHING	TOP PLATE MIN. SIZE	ABUTTING EDGES SIZE
SW-1	7/16"	24/16 APA RATED	1	8d COMMON	6"	8d BOX OR SINKER	4"	16g X 1-1/2" STAPLE	3"	8d COMMON	12"	8d BOX OR SINKER	9"	16g X 1-1/2" STAPLE	8"	2X	16d COMMON @ 6" O.C.	16d COMMON @ 6" O.C.	(2) 2X	2X
SW-2	7/16"	24/16 APA RATED	1	8d COMMON	4"	8d BOX OR SINKER	3"	16g X 1-1/2" STAPLE	2"	8d COMMON	12"	8d BOX OR SINKER	9"	16g X 1-1/2" STAPLE	8"	2X	16d COMMON @ 4" O.C.	16d COMMON @ 4" O.C.	(2) 2X	2X
SW-4	7/16"	24/16 APA RATED	1	8d COMMON	3"	8d BOX OR SINKER	2"	16g X 1-1/2" STAPLE	2"	8d COMMON	12"	8d BOX OR SINKER	9"	16g X 1-1/2" STAPLE	8"	2X	16d COMMON @ 3" O.C.	16d COMMON @ 3" O.C.	(2) 2X	3X OR (2) 2X W/ 10d @ 3" O.C.

SHEARWALL GENERAL NOTES

1. CONTRACTOR TO CONFIRM ALL SHEAR WALL DIMENSIONS WITH ARCHITECTURAL PLANS PRIOR TO COMMENCING CONSTRUCTION.

SHEARWALL KEYED NOTES

MARK	REQUIREMENT
**	PROVIDE STRAPS AROUND WINDOW PER WINDOW STRAP DETAIL

NOTES:

1. BLOCK ALL EDGES. USE 3x BLOCKING FOR SW-3 THROUGH SW-10.
2. SHEATH CONTINUOUSLY FROM FOUNDATION SILL PLATE TO TOP PLATE.
3. NAILS TO BE FLUSH WITH SHEATHING AND NOT FRACTURE THE SURFACE.
4. SILL PLATE NAILING ONLY REQUIRED WHERE FLOOR OCCURS.
5. STAGGER ROWS AT SILL PLATE NAILING FOR SW3, SW4, SW5, SW6, SW7, SW8, SW9 AND SW10.
6. STAPLES SHALL HAVE MINIMUM CROWN WIDTH OF 7/16" AND SHALL BE INSTALLED WITH CROWN PARALLEL TO THE LONG DIMENSION OF THE FRAMING MEMBER.
7. APPLY SHEATHING TO THE SIDE OF THE WALL WHERE SHEAR WALL CALL OUT OCCURS ON PLANS.
8. WHERE PANELS ARE APPLIED ON BOTH FACES OF A WALL, OFFSET PANEL JOINTS TO DIFFERENT FRAMING MEMBERS.
9. PROVIDE HOT DIPPED ZINC-COATED GALVANIZED STEEL STAINLESS STEEL, SILICON BRONZE OR COPPER NAILS AT PRESERVATIVE TREATED AND FIRE RETARDANT TREATED WOOD LOCATIONS.
10. FOR EXTERIOR WALLS & APPLICATIONS WHERE THE SHEATHING IS CONTINUOUS OVER THE RIM BOARD & HAS EDGE NAILING ATTACHING IT TO THE DBL TOP PLATE OF THE WALL BELOW USE THE "EXTERIOR/CONTINUOUS SHEATHING" NAILING & DETAIL. WHERE SHEATHING IS STOPPED AT THE SOLE PLATE OF THE WALL ABOVE (SUCH AS PARTY WALL SITUATIONS) USE THE "PARTY WALL/DISCONTINUOUS SHEATHING" NAILING & DETAIL.
11. PROVIDE 1/8" GAP WHERE 2X SILL PLATE OCCURS AND 1/4" GAP WHERE 3X SILL PLATE OCCURS FROM TOP OF CONCRETE TO EDGE OF SHEATHING.

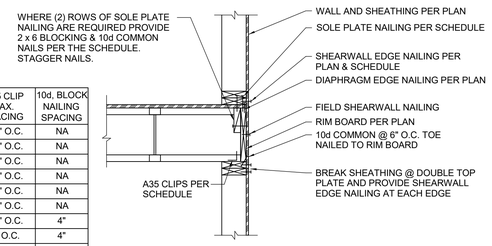

WALL	A 35 CLIP MAX. SPACING	10d, BLOCK NAILING SPACING
SW1	32" O.C.	NA
SW2	32" O.C.	NA
SW3	32" O.C.	NA
SW4	24" O.C.	NA
SW5	24" O.C.	NA
SW6	24" O.C.	NA
SW7	12" O.C.	4"
SW8	9" O.C.	4"
SW9	7" O.C.	3"
SW10	7" O.C.	3"

NOTE NOT ALL ELEMENTS ARE CALLED OUT ON THIS DETAIL. SEE PLAN FOR ADDITIONAL DETAIL CUTS.

EXTERIOR / CONTINUOUS SHEATHING DETAIL

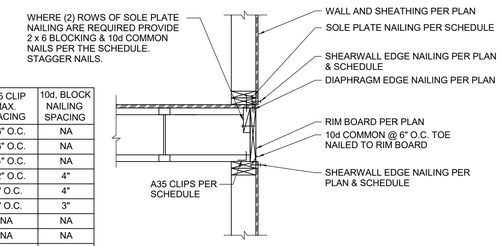

WALL	A 35 CLIP MAX. SPACING	10d, BLOCK NAILING SPACING
SW1	16" O.C.	NA
SW2	16" O.C.	NA
SW3	14" O.C.	NA
SW4	12" O.C.	4"
SW5	9" O.C.	4"
SW6	7" O.C.	3"
SW7	NA	NA
SW8	NA	NA
SW9	NA	NA
SW10	NA	NA

NOTE NOT ALL ELEMENTS (INCLUDING ADJACENT PARTY WALLS) ARE CALLED OUT ON THIS DETAIL. SEE PLAN FOR ADDITIONAL DETAIL CUTS.

PARTY WALL / DISCONTINUOUS SHEATHING DETAIL

ROOF BEAM SCHEDULE

MARK	QUANTITY	SIZE	TYPE	BUILT-UP FASTENERS SIZE	BUILT-UP FASTENERS ROWS	BUILT-UP FASTENERS SPACING	MIN. POST	COMMENTS
HDR	(2)	2 X 8	DFLN #2	10d COMMON	2	12	(2) 2x	-
RB1	(2)	2 X 10	DFLN #2	10d COMMON	2	12	(2) 2x	-
RB2	(3)	2 X 10	DFLN #2	10d COMMON	2	12	(2) 2x	-
RB3	(2)	2 X 12	DFLN #2	10d COMMON	2	12	(2) 2x	-
RB4	(3)	2 X 12	DFLN #2	10d COMMON	3	12	(3) 2x	-
RB5	(2)	1 3/4" X 7 1/4"	2.0E MICROLLAM LVL	16d COMMON	2	12	(2) 2x	-
RB6	(3)	1 3/4" X 7 1/4"	2.0E MICROLLAM LVL	16d COMMON	2	12	(2) 2x	-
RB7	(1)	1 3/4" X 9 1/2"	2.0E MICROLLAM LVL	--	--	--	(2) 2x	-
RB8	(2)	1 3/4" X 9 1/2"	2.0E MICROLLAM LVL	16d COMMON	2	12	(2) 2x	-
RB9	(3)	1 3/4" X 9 1/2"	2.0E MICROLLAM LVL	16d COMMON	2	12	(2) 2x	-
RB10	(1)	1 3/4" X 11 7/8"	2.0E MICROLLAM LVL	--	--	--	(2) 2x	-
RB11	(2)	1 3/4" X 11 7/8"	2.0E MICROLLAM LVL	16d COMMON	2	12	(3) 2x	-
RB12	(3)	1 3/4" X 11 7/8"	2.0E MICROLLAM LVL	16d COMMON	3	12	(4) 2x	-
RB13	(1)	1 3/4" X 14"	2.0E MICROLLAM LVL	--	--	--	(3) 2x	-
RB14	(2)	1 3/4" X 14"	2.0E MICROLLAM LVL	16d COMMON	3	12	(3) 2x	-
RB15	(3)	1 3/4" X 14"	2.0E MICROLLAM LVL	16d COMMON	3	12	(4) 2x	-
RB16	(1)	1 3/4" X 16"	2.0E MICROLLAM LVL	--	--	--	(3) 2x	-
RB17	(2)	1 3/4" X 16"	2.0E MICROLLAM LVL	16d COMMON	3	12	(3) 2x	-
RB18	(3)	1 3/4" X 16"	2.0E MICROLLAM LVL	16d COMMON	3	12	(4) 2x	-
RB19	(1)	1 3/4" X 18"	2.0E MICROLLAM LVL	--	--	--	(3) 2x	-
RB20	(2)	1 3/4" X 18"	2.0E MICROLLAM LVL	16d COMMON	3	12	(4) 2x	-
RB21	(3)	1 3/4" X 18"	2.0E MICROLLAM LVL	16d COMMON	3	12	(4) 2x	-
RB22	(1)	5 1/8" X 24"	24F-V4 GLB	--	--	--	(4) 2x	-
RB23	(1)	5 1/8" X 24"	24F-V8 GLB	--	--	--	(4) 2x	-
RB24	(1)	6 3/4" X 24"	24F-4 GLB	--	--	--	(5) 2x	-

NOTES:

1. FASTENERS ARE FROM (1) SIDE FOR (2) PLY BEAMS, BOTH SIDES FOR (3) PLY BEAMS AND THRU-BOLTED FOR (4) PLY BEAMS.
2. FASTENERS ROWS ARE 2" FROM TOP AND BOTTOM OF BEAM. THIRD ROW OF FASTENERS IS CENTERED IF REQUIRED.
3. STAGGER ALL ROWS OF FASTENERS.
4. SOME BEAMS MAY BE UNUSED, SEE PLAN FOR REQUIREMENTS.
5. SEE THE "BUILT-UP BEAM FASTENERS" DETAIL FOR FURTHER CLARIFICATION.
6. ALL POSTS ARE TO MATCH THE WIDTH AND MATERIAL OF THE WALL IN WHICH THE POST OCCURS.

SNOW DRIFT LOADING DIAGRAM

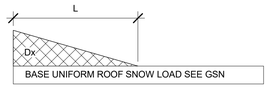

D1 MAX = 49 PSF + BASE L = 20.6 FT.

D2 MAX = 68 PSF + BASE L = 28 FT.

STEEL COLUMN AND BASEPLATE SCHEDULE

COLUMN MARK	COLUMN SIZE	BASEPLATE SIZE	BASEPLATE TYPE	ANCHOR BOLTS NO.	ANCHOR BOLTS SIZE	ANCHOR BOLTS EMBEDMENT	ANCHOR BOLTS TYPE	CAP PLATE THICKNESS	CAP PLATE TYPE	COMMENTS COMMENTS
C-1	HSS 6x6x1/4"	12" x 12" x 3/4"	SBP-2	(4)	3/4"	8"	EPOXY	SEE DETAIL	15/S6.0 FOR CAP	-
C-2	HSS 6x6x1/4"	12" x 12" x 3/4"	SBP-2	(4)	3/4"	8"	EPOXY	3/4"	SCP-B	-
C-3	HSS 4x4x1/4"	5" x 10" x 3/4"	SBP-1	(4)	3/4"	8"	EPOXY	3/4"	SCP-B	-
C-4	HSS 6x6x1/2"	16" x 16" x 1-1/2"	SBP-2	(4)	PAB8	15"	C	SEE DETAIL	12/S6.0 FOR CAP	ANCHORS MUST BE TIED & CAST IN PLACE. USE TEMPLATE

STEEL COLUMN BASE PLATE

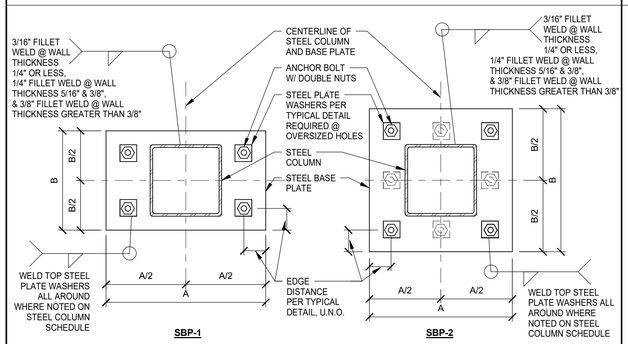

STEEL CAP PLATES (PLAN VIEW)

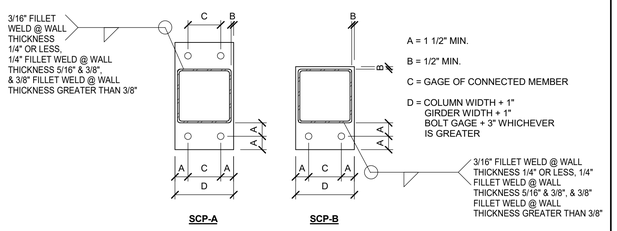

TYPICAL PLATE WASHERS, HOLE SIZES & EDGE DISTANCES @ STEEL COLUMN BASE PLATES

F1556 GRADE 36 ANCHOR BOLT DIA.	STEEL PLATE WASHER (A36)	HOLE SIZE @ STEEL PLATE WASHER	OVERSIZED HOLE @ STEEL BASE PLATE	EDGE DISTANCE OF BASE PLATE TO CENTERLINE OF HOLE
3/4"	3/8" x 2 1/2" x 2 1/2"	13/16"	15/16"	1 1/2"
7/8"	1/2" x 2 3/4" x 2 3/4"	15/16"	1 1/16"	1 3/4"
1"	1/2" x 3 1/4" x 3 1/4"	1 1/16"	1 1/4"	2"
1 1/4"	5/8" x 3 1/2" x 3 1/2"	1 5/16"	1 9/16"	2 1/4"
1 1/2"	5/8" x 3 3/4" x 3 3/4"	1 9/16"	1 13/16"	2 1/2"

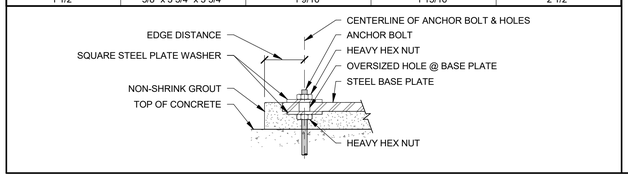

STEEL COLUMN ANCHOR BOLTS (GRADE A36)

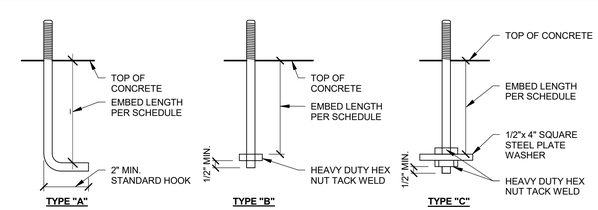

NOTE:
CONTRACTOR SHALL COORDINATE ANCHOR BOLT EXTENSIONS & THREAD LENGTHS.

ENSIGN
THE STANDARD IN ENGINEERING

SALT LAKE CITY
45 W. 10000 S., Suite 500
Sandy, UT 84070
Phone: 801.255.0529

LAYTON
Phone: 801.547.1100

TOOELE
Phone: 435.843.3590

CEDAR CITY
Phone: 435.865.1453

RICHFIELD
Phone: 435.590.0187

WWW.ENSIGNENG.COM

CLIENT INFORMATION:
Owner

TENDER CARE HOSPICE ASSISTED LIVING FACILITY

5TH NORTH AND 1ST EAST STREET PRICE CITY, UTAH

PROFESSIONAL STRUCTURAL ENGINEER No. 175238 DAVID B. ALTER STATE OF UTAH
4/25/16

PERMIT 03/08/16

NO.	DATE	REVISION

STRUCTURAL SCHEDULES

PROJECT NUMBER 6803
DATE 12-31-15
DRAWN BY R. MALIGON
PROJECT ENGINEER A. HAWKINS
PROJECT MANAGER C. DUNCAN

S0.3

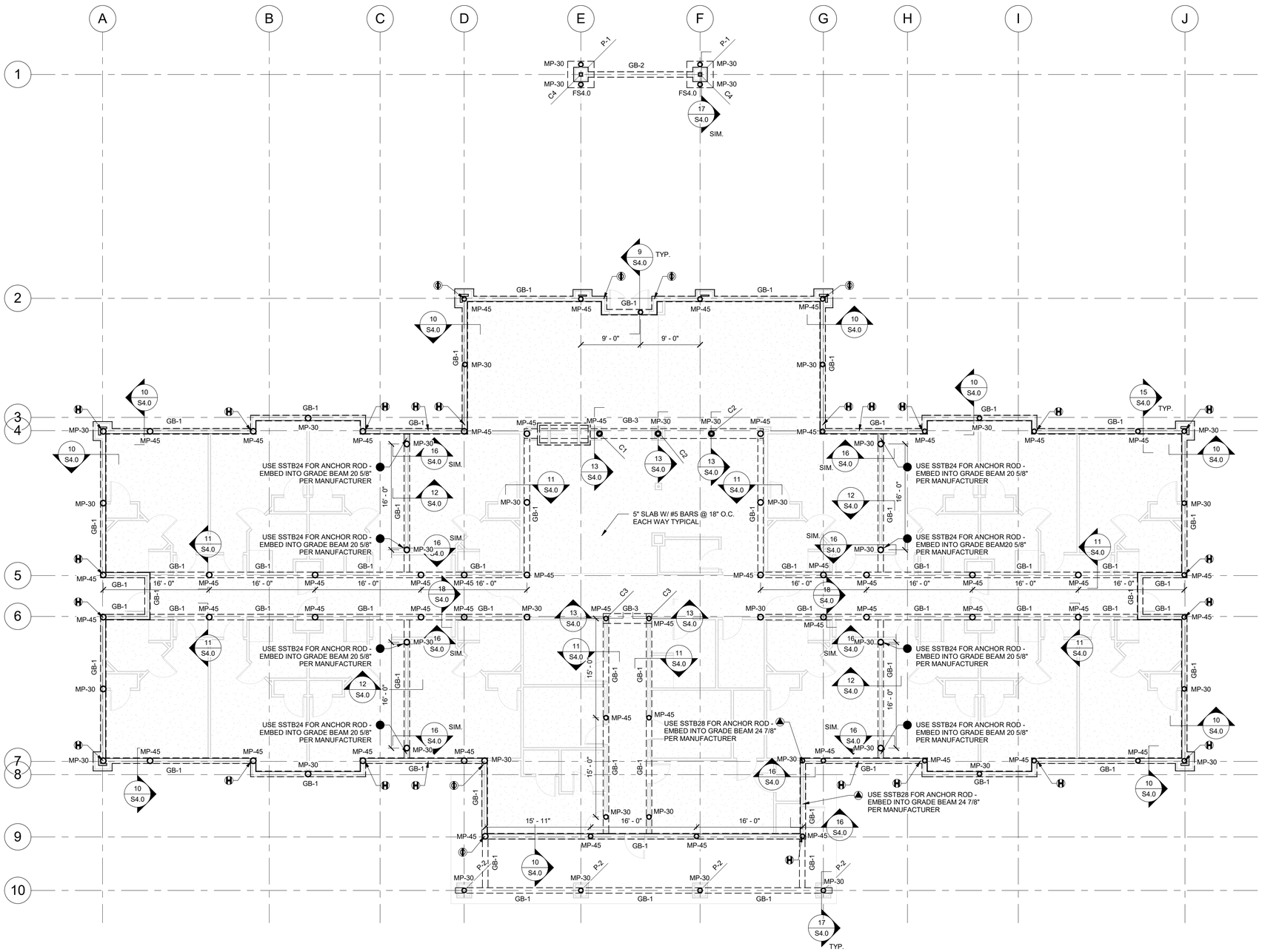

1 FOOTING & FOUNDATION PLAN
SCALE: 1/8" = 1'-0"

ENSIGN
THE STANDARD IN ENGINEERING

SALT LAKE CITY
45 W. 10000 S., Suite 500
Sandy, UT 84070
Phone: 801.255.0529

LAYTON
Phone: 801.547.1100

TOOELE
Phone: 435.843.3590

CEDAR CITY
Phone: 435.865.1453

RICHFIELD
Phone: 435.590.0187

WWW.ENSIGNENG.COM

CLIENT INFORMATION:
Owner

TENDER CARE HOSPICE ASSISTED LIVING FACILITY

5TH NORTH AND 1ST EAST STREET
PRICE CITY, UTAH

PROFESSIONAL STRUCTURAL ENGINEER
No. 175238
DAVID B. ALTER
STATE OF UTAH
4/25/16

PERMIT 03/08/16

NO.	DATE	REVISION

FOOTING & FOUNDATION PLAN

PROJECT NUMBER
6803
DATE
12-31-15
DRAWN BY
R. MALIGON
PROJECT ENGINEER
A. HAWKINS
PROJECT MANAGER
C. DUNCAN

S1.0

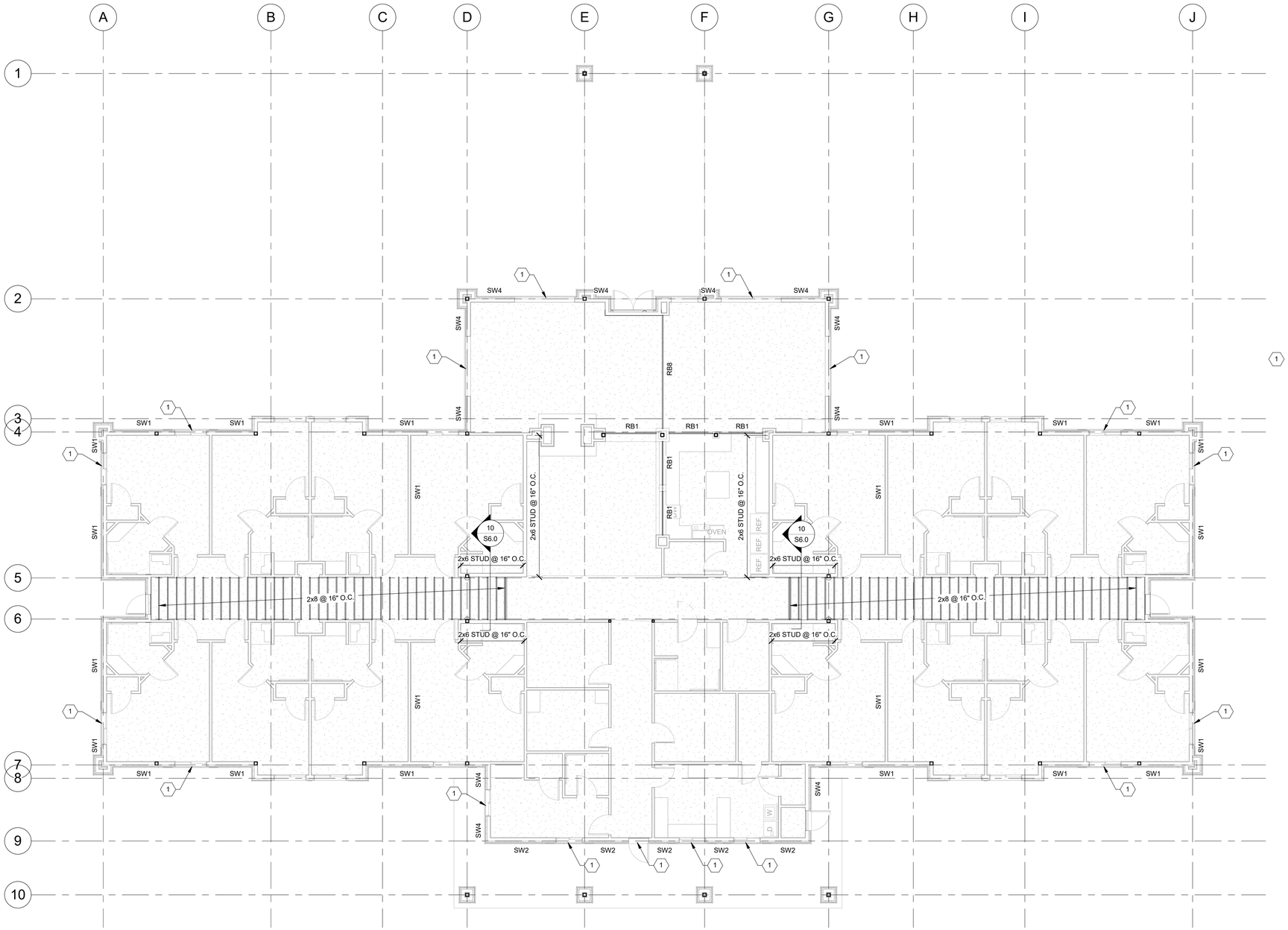

SHEAR WALL KEYED NOTES

1 PERFORATED SHEAR WALL SHEATH ABOVE AND BELOW OPENING ACCORDING TO ADJACENT SHEAR WALLS.

1 WALL FRAMING PLAN
SCALE: 1/8" = 1'-0"

ENSIGN
THE STANDARD IN ENGINEERING

SALT LAKE CITY
45 W. 10000 S., Suite 500
Sandy, UT 84070
Phone: 801.255.0529

LAYTON
Phone: 801.547.1100

TOOELE
Phone: 435.843.3590

CEDAR CITY
Phone: 435.865.1453

RICHFIELD
Phone: 435.590.0187

WWW.ENSIGNENG.COM

CLIENT INFORMATION:
Owner

TENDER CARE HOSPICE ASSISTED LIVING FACILITY

5TH NORTH AND 1ST EAST STREET
PRICE CITY, UTAH

PROFESSIONAL STRUCTURAL ENGINEER
No. 175238
DAVID B. ALTER
STATE OF UTAH
4/25/16

PERMIT 03/08/16

NO.	DATE	REVISION

WALL FRAMING PLAN

PROJECT NUMBER
6803
DATE
12-31-15
DRAWN BY
R. MALIGON
PROJECT ENGINEER
A. HAWKINS
PROJECT MANAGER
C. DUNCAN

S2.0

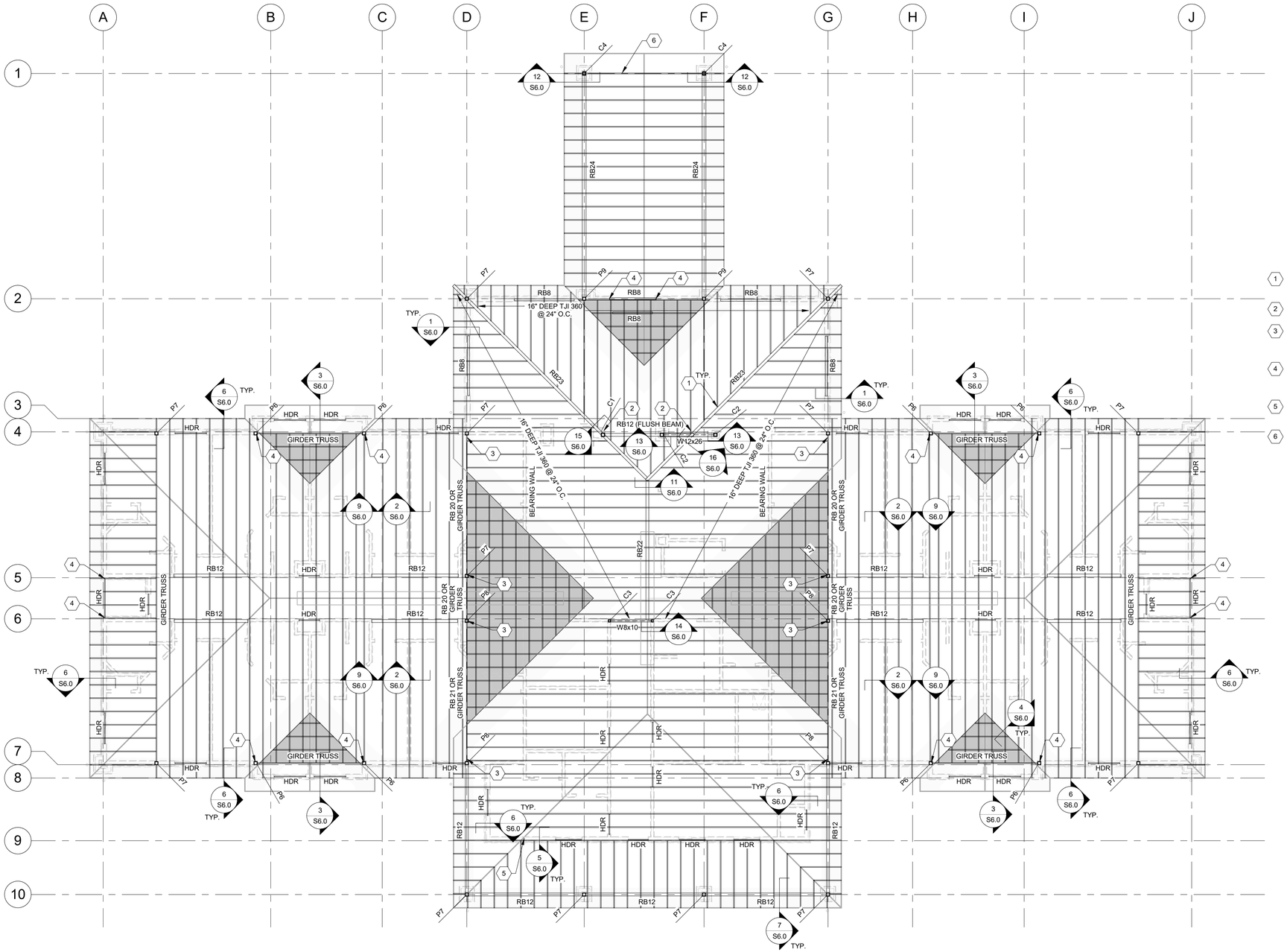

1 ROOF FRAMING PLAN
SCALE: 1/8" = 1'-0"

ROOF FRAMING PLAN KEYED NOTES

1. SKEWED/SLOPED HANGER SIMPSON LSSU H310 OR U3516/20X* SK 45 SLD18 WEB STIFFENERS REQUIRED
2. SIMPSON GLTV5.511 x SK 45 LVL TO GLB
3. STRAP BEAM TO ADJACENT BEAM OR TOP PLATE W/ (2) SIMPSON MSTC40 SEE 3/S5.0, 4/S5.0, AND 6/S5.0
4. STRAP BEAM TO ADJACENT BEAM OR TOP PLATE W/ (2) 22" LONG CS16 SEE 3/S5.0, 4/S5.0, AND 6/S5.0
5. TRUSS MANUFACTURER TO PROVIDE BLOCKING TO RESIST 75 PLF
6. DRAG TRUSS W/ 5 KIP CAPACITY AND (2) SIMPSON TBE6 EACH END.

ROOF FRAMING GENERAL NOTES

1. FOR GENERAL STRUCTURAL NOTES, SEE SHEET S0.0
2. REFER TO ARCHITECTURAL PLANS FOR ALL DIMENSIONS. CONTRACTOR TO VERIFY ALL DIMENSIONS BEFORE STARTING CONSTRUCTION. **DO NOT** SCALE DRAWINGS.
3. PROVIDE SIMPSON H1 CLIPS AT TRUSS OR RAFTER BEARING LOCATIONS.
4. SUPPORT ALL GIRDER TRUSSES WITH (2) 2X6 POST MIN., UNLESS NOTED OTHERWISE.
5. ALL SPECIFIED HARDWARE IS SIMPSON STRONG-TIE.
6. INSTALL ALL HARDWARE PER MANUFACTURER'S SPECIFICATIONS.
7. CONTACT ENGINEER FOR ALL HARDWARE SUBSTITUTIONS.
8. ALL OPENINGS THROUGH FLOORS AND WALLS ARE NOT SHOWN. COORDINATE PENETRATION REQUIREMENTS (ADDITIONAL FRAMING ELEMENTS &/OR REINFORCING) AND LOCATIONS WITH ARCHITECTURAL, MECHANICAL, ELECTRICAL, AND TYPICAL DETAILS.
9. THIS TRUSS LAYOUT IS DESIGNED BY ENSIGN ENGINEERING. WHEN A TRUSS COMPANY IS SELECTED, THE DRAWINGS ARE TO BE SUBMITTED TO ENGINEER FOR APPROVAL.
10. FRAME ROOF WITH PRE-ENGINEERED TRUSSES @ 24" O.C. UNLESS NOTED OTHERWISE.

ROOF SHEATHING NOTES

1. PROVIDE 5/8" 24/16 APA RATED SHEATHING. U.N.O.
2. NAIL PANELS W/ 10d COMMON @ 6" EDGE / 12" FIELD.
3. PROVIDE H CLIPS AT ALL UNSUPPORTED PANEL EDGES.
4. PROVIDE 1/8" GAP BETWEEN PANELS AT INSTALLATION.
5. SHEATH COMPLETELY UNDER ALL OVERBUILD AREAS.

ROOF OVERBUILD NOTES

1. PROVIDE 2X6 DFLN#2 JOISTS @ 24" O.C.
2. BRACE JOISTS @ 6'-0" O.C. MAX.
3. PROVIDE 2X8 DFLN#2 RIDGE BOARD.
4. BRACE RIDGE @ 4'-0" O.C. MAX.
5. PROVIDE 2X8 DFLN#2 VALLEY MEMBERS LAID FLAT.
6. NAIL VALLEY MEMBERS W/ (2) 16d COMMON PER TRUSS.
7. BRACE RIDGE AND JOISTS SUCH THAT LOAD IS UNIFORMLY DISTRIBUTED TO FRAMING BELOW.
8. PROVIDE ACCESS AND VENTILATION AS REQUIRED.

STUD FRAMING NOTES

1. EXTERIOR BEARING WALLS SHALL BE 2x6 DF STUD @ 16" O.C.
2. INTERIOR BEARING WALLS SHALL BE 2x4 DF STUD @ 16" O.C.

ENSIGN
THE STANDARD IN ENGINEERING

SALT LAKE CITY
45 W. 10000 S., Suite 500
Sandy, UT 84070
Phone: 801.255.0529

LAYTON
Phone: 801.547.1100

TOOELE
Phone: 435.843.3590

CEDAR CITY
Phone: 435.865.1453

RICHFIELD
Phone: 435.590.0187

WWW.ENSIGNENG.COM

CLIENT INFORMATION:
Owner

TENDER CARE HOSPICE ASSISTED LIVING FACILITY

5TH NORTH AND 1ST EAST STREET
PRICE CITY, UTAH

PROFESSIONAL STRUCTURAL ENGINEER
No. 175238
DAVID B. ALTER
STATE OF UTAH
4/25/16

PERMIT 03/08/16

NO.	DATE	REVISION

ROOF FRAMING PLAN

PROJECT NUMBER
6803
DATE
12-31-15
DRAWN BY
R. MALIGON
PROJECT ENGINEER
A. HAWKINS
PROJECT MANAGER
C. DUNCAN

S3.0

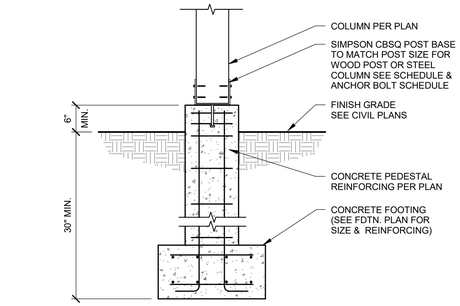

17 WOOD POST @ CONC. PIER
SCALE: N.T.S.

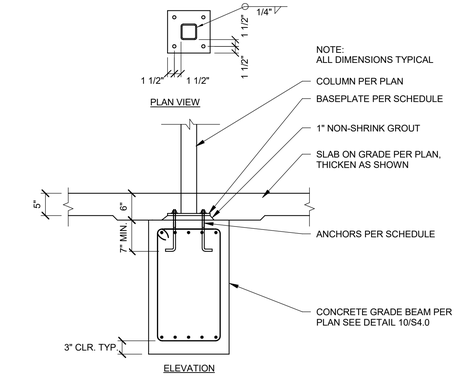

13 SPOT FOOTING w/ STEEL POST
SCALE: N.T.S.

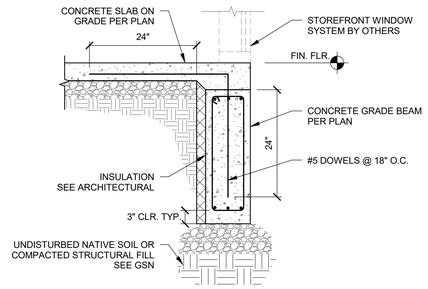

9 FDNT WALL @ STOREFRONT
SCALE: N.T.S.

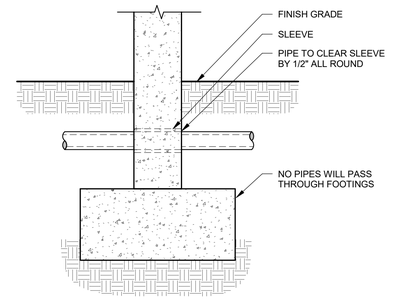

5 PIPE PENETRATION THRU FOUNDATION
SCALE: N.T.S.

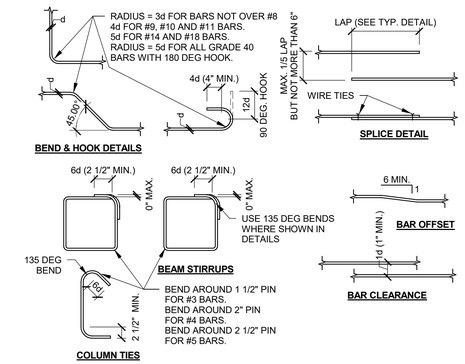

1 CONC. REINFORCING BAR DETAILS
SCALE: N.T.S.

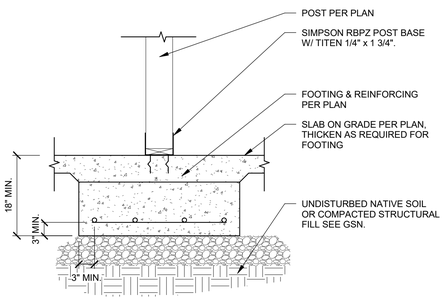

18 WOOD POST @ SPOT FOOTING
SCALE: N.T.S.

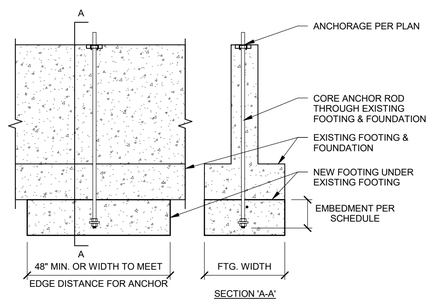

14 ANCHOR BOLT RETROFIT
SCALE: N.T.S.

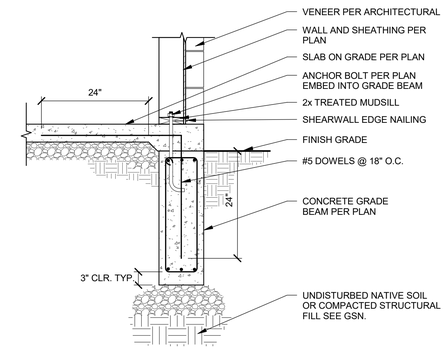

10 FOOTING & FOUNDATION WALL
SCALE: N.T.S.

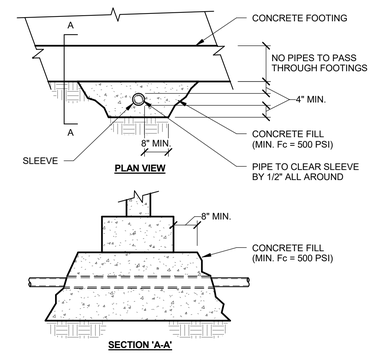

6 PIPE PASSING BELOW FOOTING
SCALE: N.T.S.

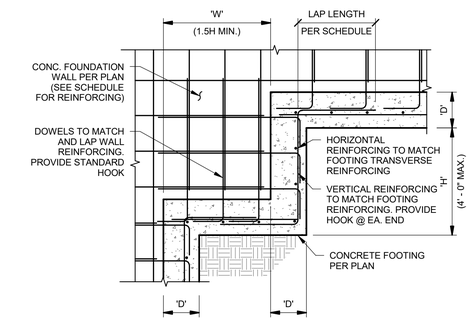

2 CONCRETE STEPPED FOOTING
SCALE: N.T.S.

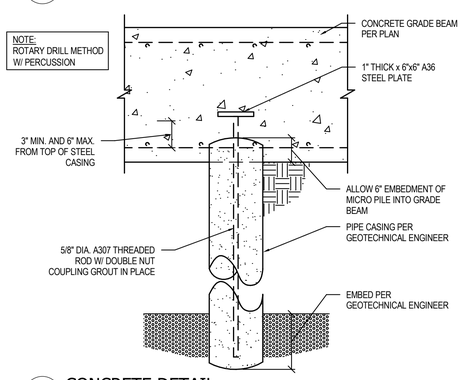

19 CONCRETE DETAIL
SCALE: N.T.S.

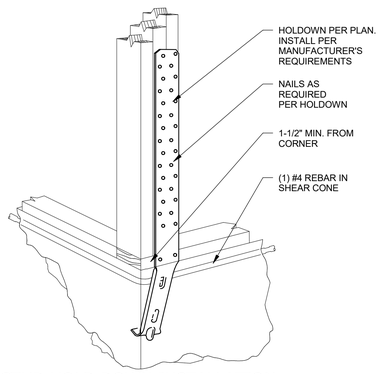

15 STHD HOLD DOWN INSTALLATION
SCALE: N.T.S.

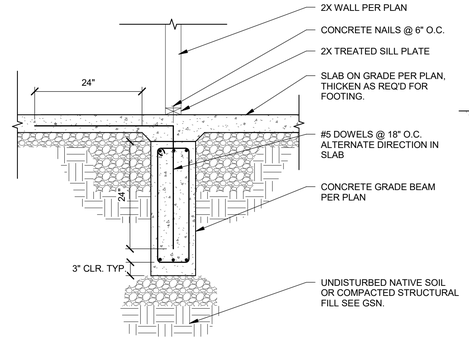

11 INTER. BEARING WALL @ SLAB FOOTING
SCALE: N.T.S.

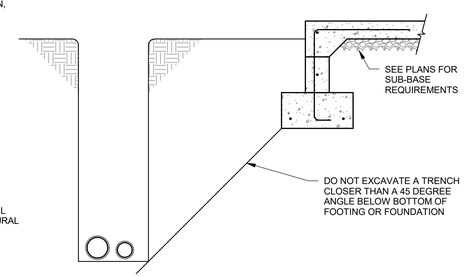

7 TRENCH PARALLEL TO FOUNDATION
SCALE: N.T.S.

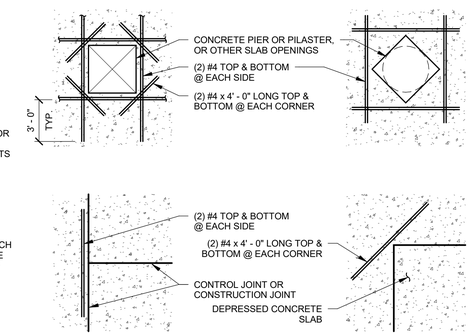

3 ADDITIONAL REINF. @ SLAB OPENINGS
SCALE: N.T.S.

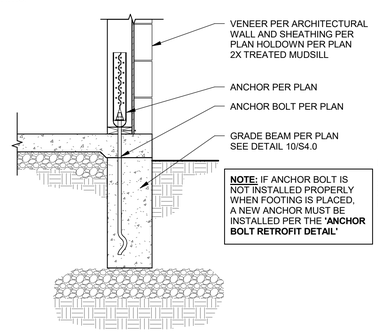

16 ANCHORAGE @ FOOTING
SCALE: N.T.S.

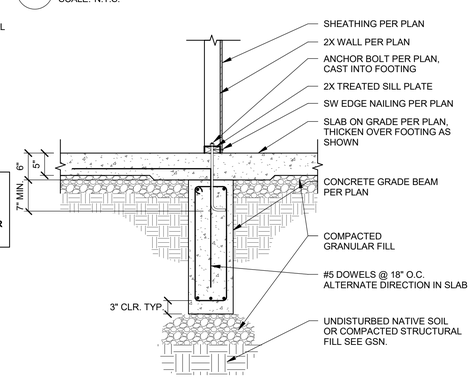

12 INTERIOR CONTINUOUS FOOTING
SCALE: N.T.S.

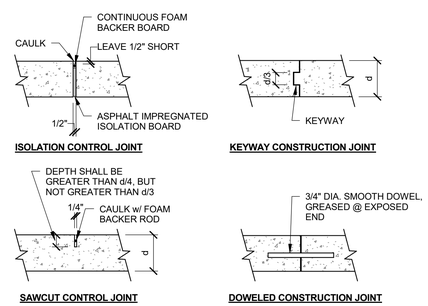

8 SLAB JOINT TYPICAL DETAILS
SCALE: N.T.S.

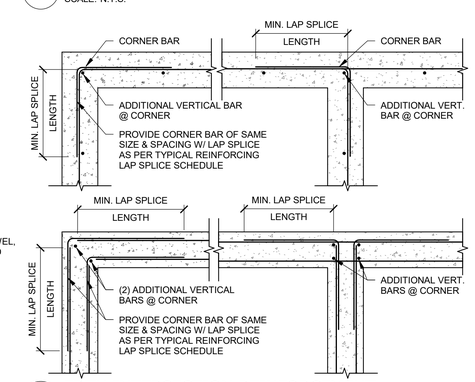

4 FDTN INTERSECTION REINFORCEMENT
SCALE: N.T.S.

ENSIGN
THE STANDARD IN ENGINEERING

SALT LAKE CITY
45 W. 10000 S., Suite 500
Sandy, UT 84070
Phone: 801.255.0529

LAYTON
Phone: 801.547.1100

TOOELE
Phone: 435.843.3590

CEDAR CITY
Phone: 435.865.1453

RICHFIELD
Phone: 435.590.0187

WWW.ENSIGNENG.COM

CLIENT INFORMATION:
Owner

TENDER CARE HOSPICE ASSISTED LIVING FACILITY

5TH NORTH AND 1ST EAST STREET
PRICE CITY, UTAH

PROFESSIONAL STRUCTURAL ENGINEER
No. 175238
DAVID B. ALTER
STATE OF UTAH
4/25/16

PERMIT 03/08/16

NO.	DATE	REVISION

FOOTING & FOUNDATION DETAILS

PROJECT NUMBER
6803
DATE
12-31-15
DRAWN BY
R. MALIGON
PROJECT ENGINEER
A. HAWKINS
PROJECT MANAGER
C. DUNCAN

S4.0

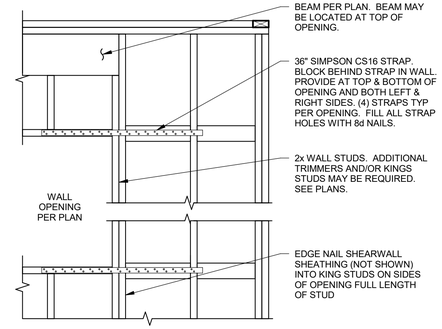

5 WINDOW STRAP DETAIL
SCALE: N.T.S.

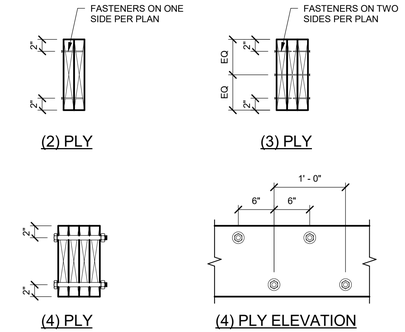

1 BUILT-UP BEAM FASTENERS
SCALE: N.T.S.

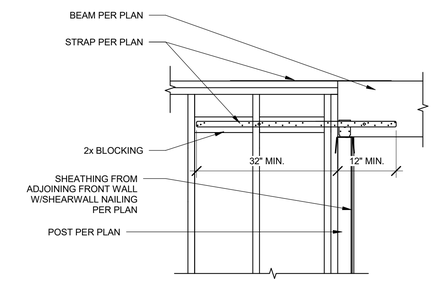

6 HEADER/COLLECTOR STRAPING
SCALE: N.T.S.

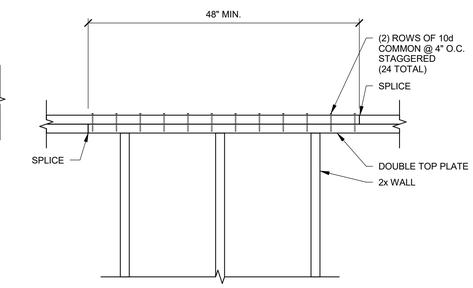

2 DBL. TOP CHORD SPLICE DTL.
SCALE: N.T.S.

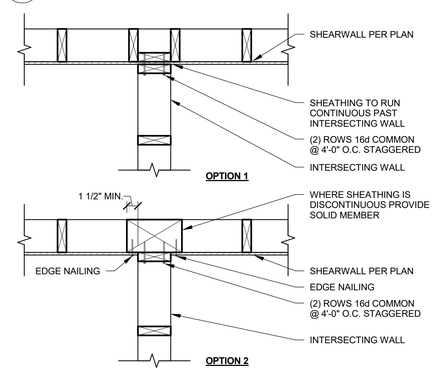

7 SHEARWALL w/ INTERSECTING WALL
SCALE: N.T.S.

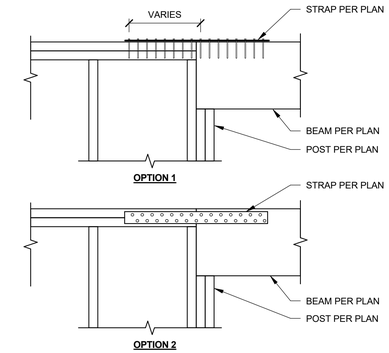

3 BEAM STRAPPING
SCALE: N.T.S.

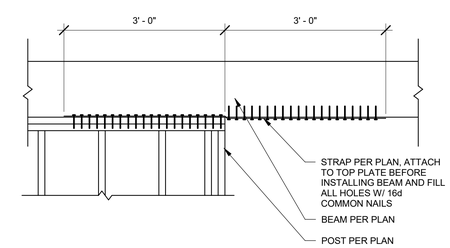

4 DRAG STRUCT CONNECTION
SCALE: N.T.S.

ENSIGN
THE STANDARD IN ENGINEERING

SALT LAKE CITY
45 W. 10000 S., Suite 500
Sandy, UT 84070
Phone: 801.255.0529

LAYTON
Phone: 801.547.1100

TOOELE
Phone: 435.843.3590

CEDAR CITY
Phone: 435.865.1453

RICHFIELD
Phone: 435.590.0187

WWW.ENSIGNENG.COM

CLIENT INFORMATION:
Owner

TENDER CARE HOSPICE ASSISTED LIVING FACILITY

5TH NORTH AND 1ST EAST STREET
PRICE CITY, UTAH

PROFESSIONAL STRUCTURAL ENGINEER
No. 175238
DAVID B. ALTER
STATE OF UTAH
4/25/16

PERMIT 03/08/16

NO.	DATE	REVISION

WALL FRAMING DETAILS

PROJECT NUMBER
6803
DATE
12-31-15
DRAWN BY
R. MALIGON
PROJECT ENGINEER
A. HAWKINS
PROJECT MANAGER
C. DUNCAN

S5.0

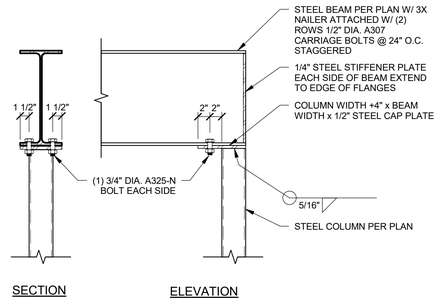

13 STEEL BEAM END @ STEEL COLUMN
SCALE: N.T.S.

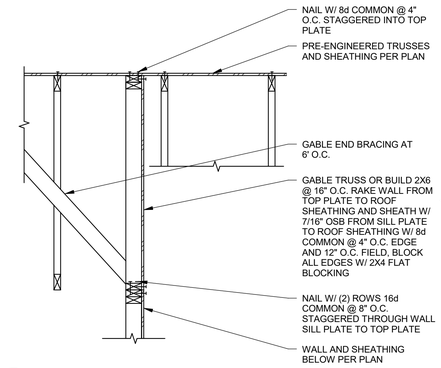

9 RAKE WALL @ NON-BEARING SHEARWALL
SCALE: N.T.S.

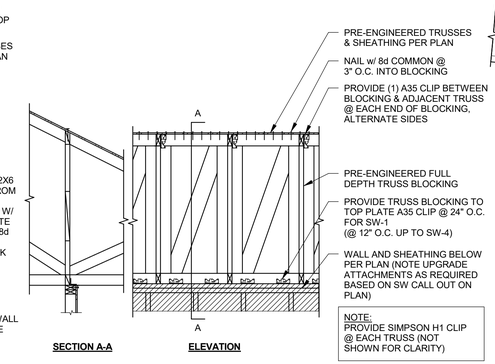

5 FULL DEPTH TRUSS BLOCKING STD DETAIL
SCALE: N.T.S.

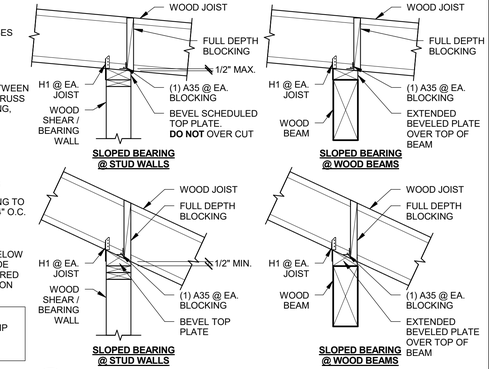

1 SLOPED JOIST BEARING DETAILS
SCALE: N.T.S.

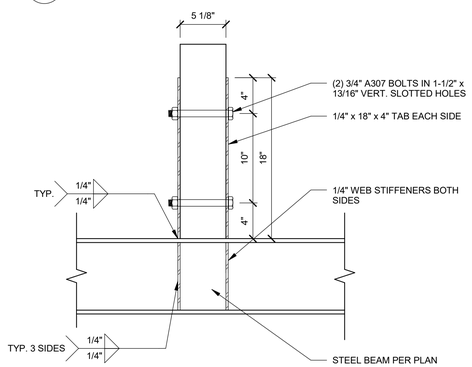

14 BUCKET @ BEAM
SCALE: N.T.S.

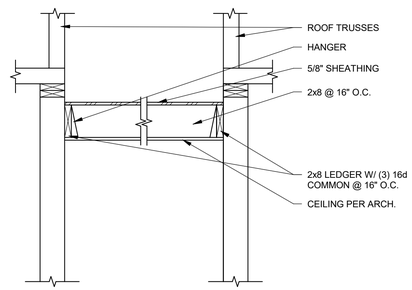

10 CORRIDOR FRAMING
SCALE: N.T.S.

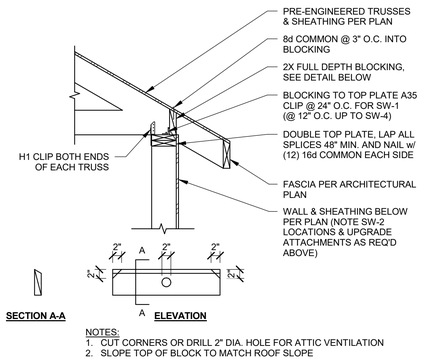

NOTES:
1. CUT CORNERS OR DRILL 2" DIA. HOLE FOR ATTIC VENTILATION
2. SLOPE TOP OF BLOCK TO MATCH ROOF SLOPE

6 TRUSS BEARING DETAIL
SCALE: N.T.S.

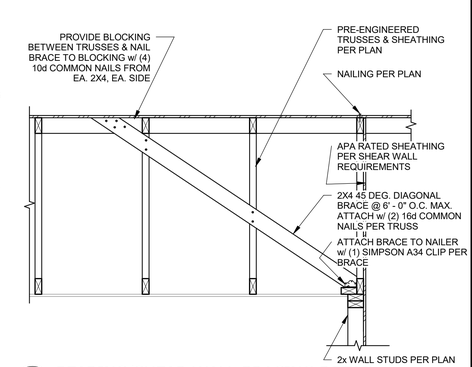

2 BEARING/SHEAR WALL BRACING DETAIL
SCALE: N.T.S.

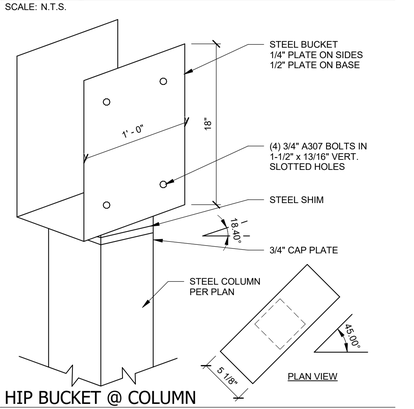

15 HIP BUCKET @ COLUMN
SCALE: N.T.S.

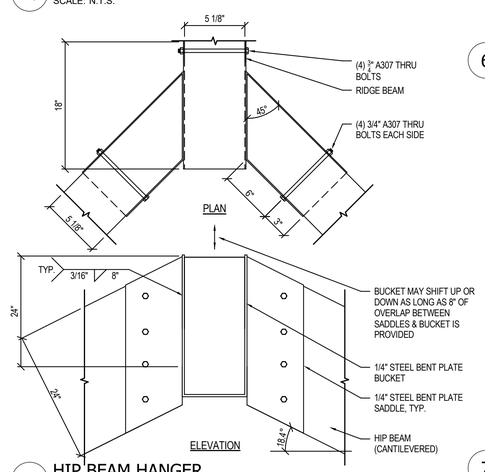

11 HIP BEAM HANGER
SCALE: N.T.S.

7 TRUSS BEARING @ PATIO/DECK BEAM
SCALE: N.T.S.

3 GABLE END TRUSS BRACING
SCALE: N.T.S.

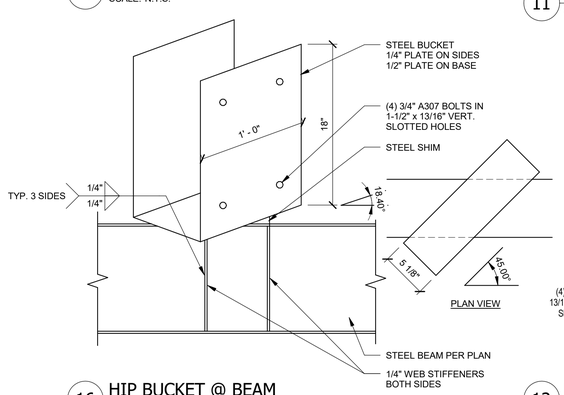

16 HIP BUCKET @ BEAM
SCALE: N.T.S.

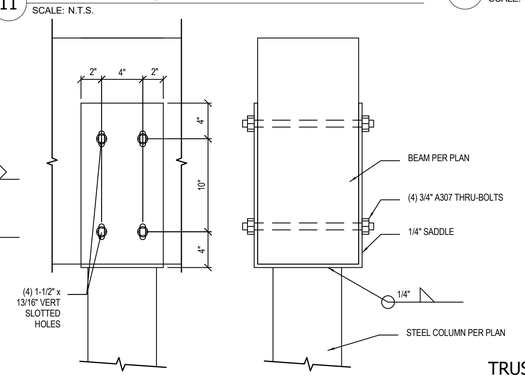

12 BEAM TO STEEL COLUMN CONNECTION
SCALE: N.T.S.

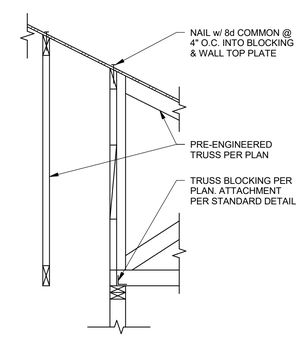

8 TRUSS DIRECTION TRANSITION @ INTERIOR BEARING WALL
SCALE: N.T.S.

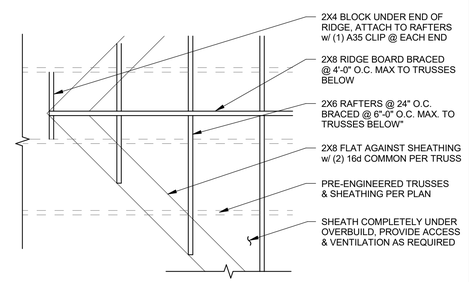

4 OVERBUILD DETAIL
SCALE: N.T.S.

ENSIGN
THE STANDARD IN ENGINEERING

SALT LAKE CITY
45 W. 10000 S., Suite 500
Sandy, UT 84070
Phone: 801.255.0529

LAYTON
Phone: 801.547.1100

TOOELE
Phone: 435.843.3590

CEDAR CITY
Phone: 435.865.1453

RICHFIELD
Phone: 435.590.0187

WWW.ENSIGNENG.COM

CLIENT INFORMATION:
Owner

TENDER CARE HOSPICE ASSISTED LIVING FACILITY

5TH NORTH AND 1ST EAST STREET PRICE CITY, UTAH

PROFESSIONAL STRUCTURAL ENGINEER
No. 175238
DAVID B. ALTER
STATE OF UTAH
4/25/16

PERMIT 03/08/16

NO.	DATE	REVISION

ROOF FRAMING DETAILS

PROJECT NUMBER
6803
DATE
12-31-15
DRAWN BY
R. MALIGON
PROJECT ENGINEER
A. HAWKINS
PROJECT MANAGER
C. DUNCAN

S6.0

ACKNOWLEDGEMENT AGREEMENT FOR CONDITIONS OF LAND USE AS REQUIRED BY THE PRICE CITY PLANNING AND ZONING DEPARTMENT AND AS AGREED TO BY THE LAND USE APPLICANT FOR DEVELOPMENT OF AN ASSISTED LIVING FACILITY AT 75 EAST 500 NORTH WITHIN THE PUBLIC FACILITIES (PF) ZONING DISTRICT.

Purpose: the purpose of this agreement is to establish the terms and conditions of an agreement between Price City and RICHARD NUFFER, regarding the conditions of land use associated with Price City Land Use Management and Development Code (Code) as it is associated with BEEHIVE HOMES, RICHARD NUFFER.

Parties: this agreement is made by and between Price City (City), 185 East Main Street, Price, Utah 84501 and RICHARD NUFFER, (Applicant), for the property located at **75 EAST 500 NORTH.**

Term: the term of this agreement commences on May 23rd, 2016 and will perpetually run with the land unless terminated based on a change of use or other performance or compliance factors as outlined in the Price City Land Use Management and Development Code (Code). This contract is further subject to compliance with all Code requirements and other state, federal or local permitting.

The parties identified above hereby agree to the following:

Applicant Shall:

- Development of location to be consistent with the final site plan submitted to Price City and with all direction received from Price City professional staff as it relates to development and the site elements indicated below finding that agreed upon site development mitigates the potential for misunderstandings in the development process.
    - All on site exterior lighting to be high efficiency LED fixtures. All exterior lighting to be angled away from neighboring residential land uses and/or placed on timers and/or shielded from light transference to neighboring properties.
    - Perimeter resident safety fence to be as indicted in location and design style. Specific approval for the six foot (6') height authorized finding that resident safety is improved and vehicle and pedestrian traffic is not negatively impacted by the fence. Fence must remain non-sight obscuring within a forty-foot (40') safety triangle at the intersection at all times.
    - Utility connections to the site as indicated and as directed by the Price City Water, Sewer and Electric Departments in terms of size and location.
    - Monument sign installed as indicated on site plan authorized. No other signage authorized without review and approval by the Price City Planning Department.
    - Right turn only upon exit from off street parking with signage.
    - Garbage dumpster to be located and identified on final site plan in screened enclosure with gates.
    - Landscaping installed as indicated on site plans meeting the minimum five percent (5%) requirement. All landscaping to be water wise.
    - Installation of all required public infrastructure including, but not limited to, curb, gutter, sidewalk, street lighting, electrical transformers, street signage, street striping, public fire hydrants in accordance with submitted and accepted plans and as directed by the Price City Public Works Department.
        - Completion of a public infrastructure development agreement, if and as required, with the Price City Public Works Department and submission of a financial surety guaranteeing the installation of public infrastructure.
        - Completion of a private utility agreement, if and as required, with the Price City Public Works Department, regarding the installation of internal water systems and connection to the public water system.
- Development consistent with storm water management and geotechnical studies and information submitted to Price City and any direction from the Price City Engineer finding that development consistent with approved plans mitigates development confusion and ensures quality development consistent with the Price City General Plan.
- Submission of building plans to the Price City building department for review and approval finding that properly submitted, reviewed and approved and inspected building construction protects the health, safety and welfare of the community.
    - All construction to be completed under the auspices of a Price City building permit.
- Application and receipt of Price City business license prior to opening and operation at site.
- Site plan final approval authorized for "Phase 2" of the project including: (1) Option 1: second building; or (2) Option 2: up to nine (9) individual residential cottages.
    - Utility connection plan approval and building plan approval and issuance of building permit by Price City for Phase 2 subject to additional review and approval.
    - Additional site plan elements required, including but not limited to, additional fencing, retaining walls, storm water management, off street parking, installation of additional public infrastructure, submission of additional or extended public infrastructure development agreement and surety
- No conditions at the property or structures, including hillside locations, that violate the Price City Property Maintenance Code finding that properly maintained property and structures mitigate deterioration of community property values and is consistent with the Price City General Plan.

Price City Shall:

- Authorize the land use contemplated herein and under the terms and conditions set forth as indicated in the Code.

SIGNED THIS _____ DAY OF _____, 20____.

Price City

By Robert Oliver, Chair

ATTEST:

Sherrie Gordon, City Recorder

Applicant:

Richard Nuffer

CONDITIONAL USE PERMIT AMENDMENT

THIS PERMIT IS HEREBY APPROVED FOR:

A LAND USE OF: AN ASSISTED LIVING FACILITY LOCATED AT 75 EAST 500 NORTH, WITHIN THE PUBLIC FACILITIES (PF) ZONING DISTRICT

CONSISTENT WITH THE TERMS, CONDITIONS AND REQUIREMENTS SET FORTH BY THE PRICE CITY PLANNING AND ZONING COMMISSION, THE PRICE CITY COUNCIL AND THE PRICE CITY LAND USE MANAGEMENT AND DEVELOPMENT CODE.

PRICE CITY

SIGNATURE DATE

Mayor
JOE L PICCOLO
City Attorney
NICK SAMPINOS
Community Director
NICK TATTON
City Recorder
SHERRIE GORDON
Public Works Director
MILES NELSON

Price City Planning & Zoning Commission

185 EAST MAIN • P.O. BOX 893 • PRICE, UT 84501
PHONE (435) 637-5010 • FAX (435) 637-2905
www.pricecityutah.com

Planning & Zoning Commissioners
ROBERT OLIVER, CHAIR
FRANKIE SACCO, VICE CHAIR
JUDY BEACCO
DALE EVANS
NANCY BENTLEY
RICHARD ROOT
JAN YOUNG
ALTERNATE: ERROLL hOLT

DATE: **MAY 11TH, 2016**

TO: **PRICE CITY PLANNING & ZONING COMMISSION**

FROM: **NICK TATTON**
PRICE CITY

RE: **SITE PLAN AMENDMENT**

Please find attached a Conditional Use Permit (CUP) application submitted by Jim Patel, Ramada General Manager, for a site plan amendment to accommodate a physical facility expansion of the bar/lounge area of the hotel located at 838 Westwood Blvd. within the Commercial 1 (C-1) zoning district. The subject of the site plan amendment is the bar, a conditional use, based on Section 11.3.4.11 Drinking Places-Alcoholic Beverages, of the Price City Land Use Management and Development Code (Code). The general evaluation criteria for the land use and site plan amendment is listed in Section 11.1of the Code and the specific land use evaluation criteria and land use checklist is in Section 11.1.m of the Code.

It is the recommendation of staff to discuss the expansion with the applicant and provide a recommendation of final approval to the Price City Council for the site plan amendment.

RECOMMENDED MOTION(S):

1. Move to recommend that the Price City Council provide final site plan amendment approval for an expansion of the bar/lounge at the Ramada Hotel located at 838 Westwood Blvd., within the Commercial 1 (C-1) zoning district, based on the conditional land use in Section 11.3.4.11 Drinking Places-Alcoholic Beverages, of the Price City Land Use Management and Development Code (Code), the general evaluation criteria for the land use and site plan amendment is listed in Section 11.1of the Code and the specific land use evaluation criteria and land use checklist is in Section 11.1.m of the Code, and subject to the following conditions of approval:
    a. No other renovations or site plan amendments herein approved, only the expansion of the bar/lounge as indicated on the submitted amended site plan finding that restricted site plan approvals mitigate the potential for future misunderstandings.
    b. All renovations to be completed under the auspices of a Price City Building Permit and building inspection finding that properly planned, reviewed, permitted and inspected commercial building renovations protect the health, safety and welfare of the community.

c. No installation or replacement of business signage without prior approval by the Price City Planning Department finding that properly reviewed and approved business signage promotes consistency in community signage and increases commercial activity in the community consistent with the Price City General Plan.
d. Compliance with the Utah Indoor Clean Air Act (Air Act) and signage installed to indicate smoking areas surrounding building ingress/egress finding that compliance with the Air Act protects the health, safety and welfare of the community.
e. No removal or restriction to existing off-street parking spaces finding that off street parking requirements may increase by as much as five (5) spaces minimum based on building square footage of expansion.
f. No conditions at the property or structures that violate the Price City Property Maintenance Code finding that properly maintained properties and structures mitigate negative impacts to area property values and is consistent with the Price City General Plan.

2. Move to acknowledge that the applicant, applicants agents and representatives, are aware of the conditions of approval, understand the conditions of approval and intend to comply with the conditions of approval.

Fee: $150

CONDITIONAL USE PERMIT APPLICATION

Send all completed and properly signed forms (including attachments as necessary) along with applicable fees to: Price City Community Development Department, P.O. Box 893, 185 East Main, Price, UT 84501. For questions call (435) 636-3184.

Please check one.

☐ **New Business** *(Complete boxes 1 through 13 on page 1, and all subsequent pages)*

☒ **New Construction/Development** *(Check all applicable boxes below and complete entire application)*

Plan Phase:

☐ Concept
☐ Preliminary
☒ Final SITE PLAN AMENDMENT

PLEASE TYPE OR PRINT LEGIBLY.

Applicant Information		
1. Applicant's Name: JIM PATEL		2. Title: GENERAL MANAGER
3. Applicant's Mailing Address: 838 WESTWOOD BLVD		4. Suite/Apt. No.:
5. City: PRICE	6. State: UTAH	7. Zip Code: 84501
8. County: CARBON	9. Telephone: (435) 637-8880	
Project Information		
10. Name of Project (Business): RAMADA PRICE		
11. Address of Proposed Project:		
12. Zone District *(see attached zoning map)*: C1		

Nature of Proposed Work *(Check all applicable items in boxes 13 through 16)*

13.	14.	15.	16.
☐ Sign	☐ Zone Change	☒ Excavation	☒ Industrial
☒ Commercial	☐ Storm Drainage	☐ Fill Work	☐ Annexation
☐ Residential	☐ Street Work	☒ Building	☐ Flood Plain
	☐ Road Dedication	☐ Subdivision	☐ Recreation
	☐ Water	☐ Apartments	☐ Street Opening
	☐ Sewer	☒ Electrical	☐ Demolition
17. Quarter Section(s):	18. Section(s):	19. Township(s):	20. Range(s) & Base:

21. Estimated Cost of Project:	22. Electrical Load Sheet:	23. Project Plans:
a) Site Work $_____ b) Buildings $_____ c) Other $_____ Total $_____ NOT KNOWN	*(Attach preliminary and final to application)* TO BE DETERMINED	☒ Plans Included ☐ Attachments (Number) ____

24. Brief Description of Project:

EXTEND EXISTING LOUNGE APPROXIMATELY 25' SOUTH.

25. Justification (Explain why this project is needed):

ADDITIONAL AREA IS NEEDED TO ACCOMMODATE INCREASING LOUNGE ACTIVITY.

26. Names and Addresses of Adjoining Property Owners, Lessees, Etc.:

NAME	ADDRESS (City, ST, Zip)	TELEPHONE
1. HOLIDAY INN EXPRESS	925 WESTWOOD BLVD. PRICE, UTAH	(435) 637-7700
2. SUPER 8 MOTEL	180 HOSPITAL DR. PRICE, UTAH	(435) 637-8088
3.		( )

27. Estimated Starting Date:	28. Estimated Completion Date:	29. Has P.R.W.I.D. Sewer Survey Been Submitted? ☐ Yes ☒ No
6 / 15 / 2016	9 / 15 / 2016	

Signature of Property Owner — Date: 5/11/16

JIM PATEL — GENERAL MANAGER

Please Print Name — Title

Office Use Only

Recommendation of Planning and Zoning Administrator (Community Director):

☒ Approve
☐ Decline

Comments: ① Needs P&Z & CC Approval
② Needs site plan complete

Signature: _____ Date: 5-11-16

Requires:

☒ Building Permit
☐ Conditional Use Permit
☐ Code Amendment
☐ Board of Adjustments Variance
☐ Flood Plain Development Permit
☒ Other: CUP Site plan amendment

SITE PLAN

Please provide a drawing of your proposed site in the space below. Include building floor plan, profiles, cross-sections, dimensions, setbacks, and signs. Also indicate exits, restrooms, and fire extinguisher placement. Use an attached sheet of paper, if necessary.

SEE ATTACHED SITE PLAN

EIS ENVIRONMENTAL & ENGINEERING CONSULTING

435-472-3814 / 800-641-2927 / FAX 435-472-8780 /tompaluso@preciscom.net / 31 NORTH MAIN STREET HELPER, UTAH 84526

MEMO

MEMO TO: **Trenton Bennett-Price City Inspector**

MEMO FROM: **J. T. 'Tom" Paluso, P. E.** Tom

DATE: **May 11, 2016**

SUBJECT: **Ramada Lounge Expansion**

Attached are three copies of the Ramada Lounge Expansion drawings as per your conversation with Gary Taylor. If you have any questions Gary can be reached at 650-6396. The Conditional Use Application for this project has been submitted to Nick Tatton.

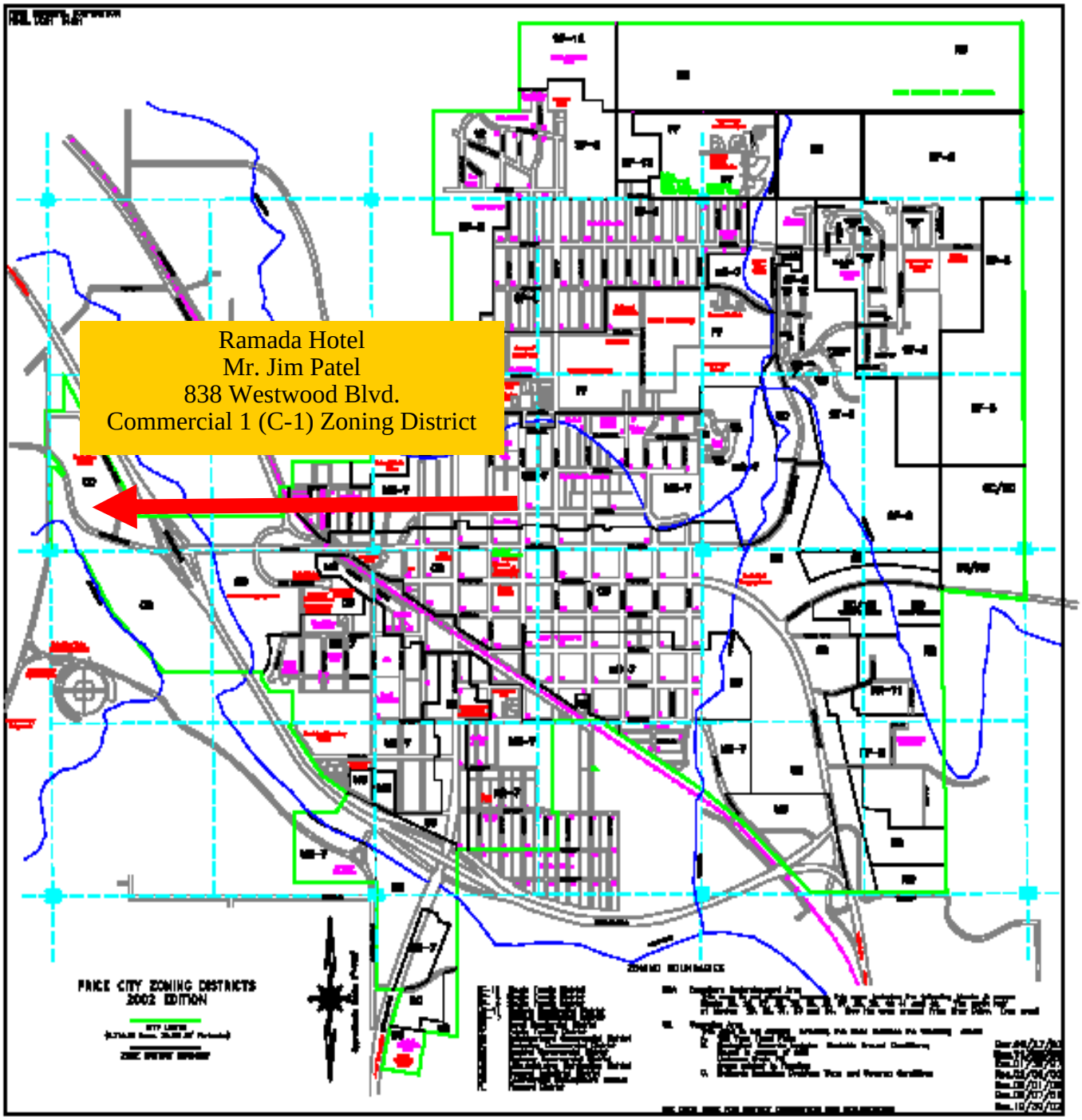
Ramada Hotel
Mr. Jim Patel
838 Westwood Blvd.
Commercial 1 (C-1) Zoning District
PRICE CITY ZONING DISTRICTS
2002 EDITION

DRAWING SCHEDULE	
DRAWING NO.	TITLE
1	SITE PLAN
2	GENERAL NOTES
3	FOUNDATION
4	WALL LAYOUTS
5	WALL LAYOUTS 2
6	WALLS
7	ROOF TRUSSES
8	TRUSS SUPPORTS
9	SUPPORTS
10	MANAGER'S BEDROOM WINDOWS

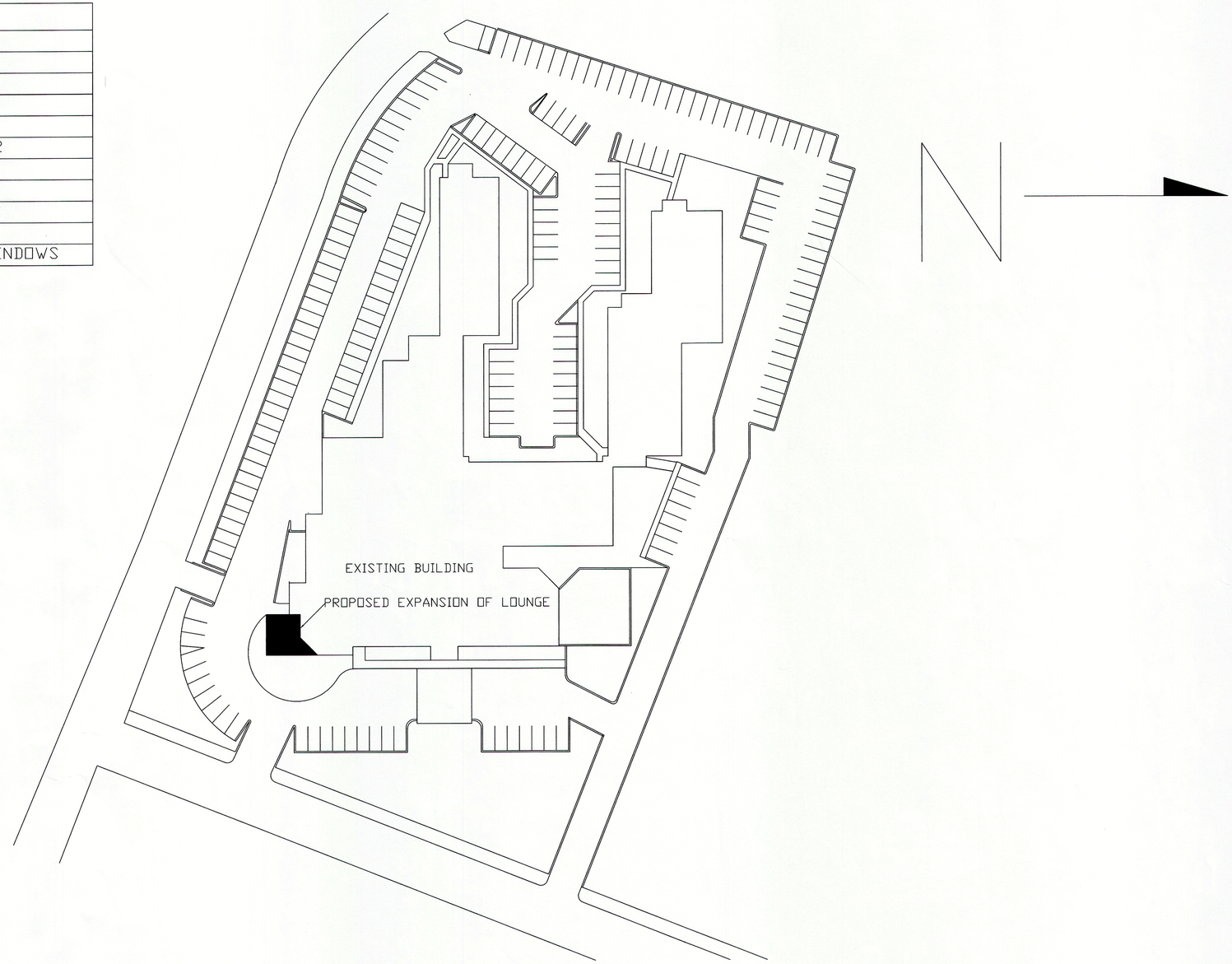

Environmental Industrial Services
Environmental & Engineer Consulting
31 NORTH MAIN
HELPER, UTAH 84526
(435) 472-3814

NO.:	REVISION	DATE: / BY:

DRAWN BY: GT 13 APRIL 2016
CHECK BY: JTP
ENGINEERED BY: GT

RAMADE INN
PRICE, UTAH 84501

SITE PLAN

SIZE:
DWG NO.: 1
SCALE:
SHEET: 1 OF 10

ACKNOWLEDGEMENT AGREEMENT FOR CONDITIONS OF LAND USE AS REQUIRED BY THE PRICE CITY PLANNING AND ZONING DEPARTMENT AND AS AGREED TO BY THE LAND USE APPLICANT FOR AMENDMENT OF THE SITE PLAN FOR THE RAMADA HOTEL LOCATED AT 838 WESTWOOD BLVD. WITHIN THE COMMERCIAL 1 (C-1) ZONING DISTRICT.

Purpose: the purpose of this agreement is to establish the terms and conditions of an agreement between Price City and JIM PATEL, regarding the conditions of land use associated with Price City Land Use Management and Development Code (Code) as it is associated with RAMADA HOTEL, JIM PATEL.

Parties: this agreement is made by and between Price City (City), 185 East Main Street, Price, Utah 84501 and JIM PATEL, (Applicant), for the property located at 838 WESTWOOD BLVD.

Term: the term of this agreement commences on May 23rd, 2016 and will perpetually run with the land unless terminated based on a change of use or other performance or compliance factors as outlined in the Price City Land Use Management and Development Code (Code). This contract is further subject to compliance with all Code requirements and other state, federal or local permitting.

The parties identified above hereby agree to the following:

Applicant Shall:

- Verify that no other renovations or site plan amendments are herein approved, only the expansion of the bar/lounge as indicated on the submitted amended site plan finding that restricted site plan approvals mitigate the potential for future misunderstandings.
- Acknowledge that all renovations will be completed under the auspices of a Price City Building Permit and building inspection finding that properly planned, reviewed, permitted and inspected commercial building renovations protect the health, safety and welfare of the community.
- Verify that no installation or replacement of business signage without prior approval by the Price City Planning Department finding that properly reviewed and approved business signage promotes consistency in community signage and increases commercial activity in the community consistent with the Price City General Plan.
- Ensure compliance with the Utah Indoor Clean Air Act (Air Act) and signage installed to indicate smoking areas surrounding building ingress/egress finding that compliance with the Air Act protects the health, safety and welfare of the community.
- Verify that no removal or restriction to existing off-street parking spaces finding that off street parking requirements may increase by as much as five (5) spaces minimum based on building square footage of expansion.
- Ensure that no conditions at the property or structures that violate the Price City Property Maintenance Code finding that properly maintained properties and structures mitigate negative impacts to area property values and is consistent with the Price City General Plan.

Price City Shall:

- Authorize the land use contemplated herein and under the terms and conditions set forth as indicated in the Code.

SIGNED THIS _____ DAY OF _____, 20____.

Price City	Applicant:
_____	_____
By Robert Oliver, Chair	JIM PATEL

ATTEST:

_____

Sherrie Gordon, City Recorder

CONDITIONAL USE PERMIT AMENDMENT

THIS PERMIT IS HEREBY APPROVED FOR:

A LAND USE OF: A SITE PLAN AMENDMENT TO EXPAND THE BAR/LOUNGE LOCATED AT 838 WESTWOOD BLVD. WITHIN THE COMMERCIAL 1 (C-1) ZONING DISTRICT

CONSISTENT WITH THE TERMS, CONDITIONS AND REQUIREMENTS SET FORTH BY THE PRICE CITY PLANNING AND ZONING COMMISSION, THE PRICE CITY COUNCIL AND THE PRICE CITY LAND USE MANAGEMENT AND DEVELOPMENT CODE.

PRICE CITY

SIGNATURE DATE