The Regular Meeting of the West Valley City Council will be held on Tuesday, May 10, 2016, at 6:30 PM, in the City Council Chambers, West Valley City Hall, 3600 Constitution Boulevard, West Valley City, Utah. Members of the press and public are invited to attend.

Posted May 5, 2016 at 1:00 PM

A G E N D A

1. Call to Order

2. Roll Call

3. Opening Ceremony: Councilmember Tom Huynh

4. Special Recognitions

5. Approval of Minutes:

   A. April 26, 2016

6. Comment Period:

(The comment period is limited to 30 minutes. Any person wishing to comment shall limit their comments to five minutes. Any person wishing to comment during the comment period shall request recognition by the Mayor. Upon recognition, the citizen shall approach the microphone. All comments shall be directed to the Mayor. No person addressing the City Council during the comment period shall be allowed to comment more than once during that comment period. Speakers should not expect any debate with the Mayor, City Council or City Staff; however, the Mayor, City Council or City Staff may respond within the 30-minute period.)

- West Valley City does not discriminate on the basis of race, color, national origin, gender, religion, age or disability in employment or the provision of services.
- If you are planning to attend this public meeting and, due to a disability, need assistance in understanding or participating in the meeting, please notify the City eight or more hours in advance of the meeting and we will try to provide whatever assistance may be required. The person to contact for assistance is Nichole Camac.

A. Public Comments

B. City Manager Comments

C. City Council Comments

7. Ordinances:

A. 16-17: Amend Sections 16-1-101, 16-2-101, 16-4-101, 16-5-101, 16-11-101, 16-12-101, 16-13-101, and 16-14-101 and Enact Section 16-15-101 of Title 16 of the West Valley City Municipal Code to Adopt the 2014 and 2015 Editions of the International Codes

8. Resolutions:

A. 16-72: Support the Efforts of the West Valley City Youth City Council to Educate the City's Youth Concerning the Hazards of Electronic Cigarettes

B. 16-73: Authorize the City to Enter into a First Amendment to the Theatre Sublease Agreement with Hale Centre Theatre for Use of the Hale Centre Theatre Facility

C. 16-74: Award a Contract to Layton Construction to Complete the Basement of the Utah Cultural Celebration Center Located at 1355 West 3100 South

D. 16-75: Approve an Agreement Between West Valley City and the Utah Transit Authority for the Rerouting of Bus Rapid Transit Service in Fairbourne Station

E. 16-76: Authorize and Approve the Execution and Delivery of a Master Lease Agreement by and Between the City and the Municipal Building Authority of West Valley City, Utah ("The Authority") and a Ground Lease Agreement; Authorize the Issuance and Sale by the Authority of Its Lease Revenue and

Refunding Bonds, Series 2016, in the Aggregate Principal Amount of Not More Than $36,000,000; and Related Matters

F. 16-77: Adopt a Tentative Budget for the Fiscal Year Commencing July 1, 2016 and Ending June 30, 2017; and Setting August 9, 2016 as the Date for Public Hearing

9. Motion for Executive Session

10. Adjourn

MINUTES OF COUNCIL REGULAR MEETING – APRIL 26, 2016

THE WEST VALLEY CITY COUNCIL MET IN REGULAR SESSION ON TUESDAY, APRIL 26, 2016, AT 6:30 P.M. IN THE COUNCIL CHAMBERS, WEST VALLEY CITY HALL, 3600 CONSTITUTION BOULEVARD, WEST VALLEY CITY, UTAH. THE MEETING WAS CALLED TO ORDER AND CONDUCTED BY MAYOR BIGELOW.

THE FOLLOWING MEMBERS WERE PRESENT:

Ron Bigelow, Mayor
Don Christensen, Councilmember At-Large
Lars Nordfelt, Councilmember At-Large
Tom Huynh, Councilmember District 1
Steve Buhler, Councilmember District 2
Karen Lang, Councilmember District 3
Steve Vincent, Councilmember District 4

STAFF PRESENT:

Wayne Pyle, City Manager
Nichole Camac, City Recorder

Paul Isaac, Assistant City Manager/HR Director
Nicole Cottle, Assistant City Manager/CED Director
Eric Bunderson, City Attorney
Jim Welch, Finance Director
Lee Russo, Police Chief
John Evans, Fire Chief
Layne Morris, CPD Director
Russell Willardson, Public Works Director
Kevin Astill, Parks and Recreation Director
Sam Johnson, Strategic Communications Director
Jake Arslanian, Public Works Department
Steve Lehman, CED Department
Jason Erekson, Parks and Recreation Department

OPENING CEREMONY
Councilmember Lars Nordfelt conducted the Opening Ceremony and asked members of the City Council, City staff, and the audience to rise and recite the Pledge of Allegiance to the Flag.

APPROVAL OF MINUTES OF REGULAR MEETING HELD APRIL 12, 2016
The Council read and considered Minutes of the Regular Meeting held April 12, 2016. There were no changes, corrections or deletions.

DRAFT

Councilmember Christensen moved to approve the Minutes of the Regular Meeting held April 12, 2016. Councilmember Huynh seconded the motion.

A voice vote was taken and all members voted in favor of the motion.

PROCLAMATION DECLARING THE LAST FRIDAY OF APRIL AS ARBOR DAY IN WEST VALLEY CITY
Councilmember Vincent read a proclamation declaring the last Friday of April as Arbor Day in West Valley City.

COMMENT PERIOD
Upon inquiry by Mayor Bigelow there was no one who desired to address the City Council during the comment period.

PUBLIC HEARING, ACCEPT PUBLIC INPUT REGARDING APPLICATION NO. S-7-2016 FILED BY KEN KELTER REQUESTING APPROVAL TO AMEND THE LANDING CONDOMINIUMS LOCATED AT 2780 SOUTH 5600 WEST
Mayor Bigelow informed a public hearing had been advertised for the Regular Council Meeting scheduled April 26, 2016, in order for the City Council to hear and consider public comments regarding Application No. S-7-2016 filed by Ken Kelter requesting approval to amend the Landing Condominiums located at 2780 South 5600 West.

Mayor Bigelow presented proposed Ordinance No. 16-16 related to the proposal to be considered by the City Council subsequent to the public hearing. The City Council had previously received written information as follows:

The subject property was located at 2780 South 5600 West and was immediately south of the Workforce Services building. The property was presently being used for medical and retail uses in the C-2 zone.

The applicant had proposed to amend the existing condominium plat by formally platting the convertible land into a new building pad. The definition of a condominium was the ownership of a single unit in a multiunit project, together with an undivided interest in the common areas and facilities of the property.

The Landing Condominium plat had been recorded in May of 2011. As part of that plat, a portion had been designated as convertible land, meaning it would develop at a later tie. Under provisions of the Utah Condominium Act, the applicant had five years to convert this space. As May 2016 would be the five- year mark, the applicant was proposing to utilize the convertible land.

DRAFT

All exterior parking spaces, landscaping and common areas were held in common ownership. The applicant had submitted an updated and amended declaration and CCRs that would address the convertible land space. The existing site received conditional use approval from the City in 2005. The site plan approved for the property had not changed from its original approval. Parking, landscaping and building improvements were in good condition.

Mayor Bigelow opened the public hearing.

Ken Kelter, applicant, addressed the City Council. Mr. Kelter stated the Landing Condominium Association had three existing buildings in addition to this vacant piece of property. He explained this would be the fourth and final building and that its elevation was similar to the others, and there was sufficient parking.

Councilmember Vincent commented that providing a connection from the property to the south would be beneficial.

Mr. Kelter stated that the property owner to the south had no interest in this previously so there was dual access to the rear of each property that led into the Balmorals Townhomes in order to provide connectivity.

There being no one else to speak in favor or in opposition, Mayor Bigelow closed the public hearing.

ACTION: ORDINANCE NO. 16-16, AN ORDINANCE APPROVING THE AMENDMENT OF THE LANDING CONDOMINIUMS IN WEST VALLEY CITY

The City Council previously held a public hearing regarding Application No. S-7-2016 and proposed Ordinance No. 16-16 that would approve the Amendment of the Landing Condominiums in West Valley City.

Upon inquiry by Mayor Bigelow there were no further questions from members of the City Council, and he called for a motion.

Councilmember Buhler moved to approve Application No. S-7-2016 filed by Ken Kelter and Ordinance No. 16-16, an Ordinance approving the Amendment of the Landing Condominiums in West Valley City. Councilmember Huynh seconded the motion.

A roll call vote was taken:

Mr. Vincent	Yes
Ms. Lang	Yes
Mr. Buhler	Yes

DRAFT

Mr. Huynh	Yes
Mr. Christensen	Yes
Mr. Nordfelt	Yes
Mayor Bigelow	Yes

Unanimous.

RESOLUTION NO. 16-64, APPROVING THE PURCHASE OF A WATER LINE CONNECTION AND CAPITAL IMPROVEMENTS FROM THE GRANGER-HUNTER IMPROVEMENT DISTRICT FOR THE WEST VALLEY SKATE PARK

Mayor Bigelow presented proposed Resolution No. 16-64 that would approve the purchase of a water line connection and capital improvements from the Granger-Hunter Improvement District, in the amount of $146,123.19, for the West Valley Skate Park.

Written documentation previously provided to the City Council included information as follows:

With the construction of the skate park and surrounding landscape areas, a water connection would be required for the project. Granger-Hunter Improvement District had a fixed schedule of fees in place for water meters and associated capital improvement costs. The cost for the water meter and capital improvements necessary for the project would be in the amount of $146,123.19.

Connecting to existing water systems in Centennial Park would not be sufficient to water the newly constructed landscape areas around the Skate Park, and would overburden the current system. Granger-Hunter Improvement District directed the water line for the Skate Park to be connected on the west side of 5600 West to an existing water line under 5600 West. This would provide water for the Skate Park project and for future development of the former wetland area. The City would not need to pay the cost of installing a new water line under 5600 West but would be assessed for a meter and capital improvement costs. Installation of the meter would be done by the skate park contractor and was included as part of the project price.

Upon inquiry by Mayor Bigelow there were no further questions from members of the City Council, and he called for a motion.

Councilmember Nordfelt moved to approve Resolution No. 16-64, a Resolution Approving the Purchase of a Water Line Connection and Capital Improvements from the Granger-Hunter Improvement District for the West Valley Skate Park. Councilmember Christensen seconded the motion.

A roll call vote was taken:

DRAFT

Mr. Vincent	Yes
Ms. Lang	Yes
Mr. Buhler	Yes
Mr. Huynh	Yes
Mr. Christensen	Yes
Mr. Nordfelt	Yes
Mayor Bigelow	Yes

Unanimous.

APPLICATION NO. S-4-2016 FILED BY ANDY HUBBARD, REPRESENTING GREAT BASIN ENGINEERING, REQUESTING FINAL PLAT APPROVAL FOR FMC WEST VALLEY SUBDIVISION LOCATED AT 4101 WEST PIONEER PARKWAY

Mayor Bigelow presented Application No. S-4-2016 filed by Andy Hubbard, representing Great Basin Engineering, requesting final plat approval for FMC West Valley Subdivision located at 4101 West Pioneer Parkway.

Written documentation previously provided to the City Council included information as follows:

The purpose of the proposed subdivision would be to create two lots within an existing parking lot. The location of the new FMC building would be on Lot 1 located in the northeast corner of the parking lot. Lot 1 would comprise 20,000 square feet that was required in the C-2 zone. Lot 2 would contain approximately 117,000 square feet and would remain a parking lot for the foreseeable future.

Access to the subdivision would be gained from Pioneer Parkway. Access in and through the two lots would be achieved by interior drive aisles. Recorded access easements would need to be recorded along with the subdivision plat. In addition to the access easements, drainage easements would also exist to accommodate storm water.

The Planning Commission had approved a conditional use application for the new building. The subdivision plat would simply provide the mechanism to divide the property as required by the applicant. The subdivision plat would contain easements and other information applicable to the division of property to ensure the site could develop in accordance with City ordinances.

Upon inquiry by Mayor Bigelow there were no further questions from members of the City Council, and he called for a motion.

DRAFT

Councilmember Christensen moved to approve Application No. S-4-2016 filed by Andy Hubbard, representing Great Basin Engineering, and give final plat approval for FMC West Valley Subdivision located at 4101 West Pioneer Parkway. Councilmember Buhler seconded the motion.

A roll call vote was taken:

Mr. Vincent	Yes
Ms. Lang	Yes
Mr. Buhler	Yes
Mr. Huynh	Yes
Mr. Christensen	Yes
Mr. Nordfelt	Yes
Mayor Bigelow	Yes

Unanimous.

MOTION TO ADJOURN
Upon motion by Councilmember Huynh all voted in favor to adjourn.

THERE BEING NO FURTHER BUSINESS OF THE WEST VALLEY COUNCIL THE REGULAR MEETING OF TUESDAY, APRIL 26, 2016, WAS ADJOURNED AT 6:43 P.M. BY MAYOR BIGELOW.

I hereby certify the foregoing to be a true, accurate and complete record of the proceedings of the Regular Meeting of the West Valley City Council held Tuesday, April 26, 2016.

_____
Nichole Camac
City Recorder

DRAFT

Item: _____
Fiscal Impact: N/A___
Funding Source: _____
Account #: _____

Budget Opening Required: ☐

ISSUE:

Enactment of 2014 National Electrical Code and 2015 International Building Code, International Energy Conservation Code, International Fuel Gas Code, International Mechanical Code, International Plumbing Code, International Residential Code, International Property Maintenance Code, and International Existing Building Code.

SYNOPSIS:

This ordinance amends Sections 16-1-101, 16-2-101, 16-4-101, 16-5-101, 16-11-101, 16-12-101, 16-13-101, and 16-14-101 and enacts Section 16-15-101 of the West Valley City Municipal Code to adopt the updated international codes.

BACKGROUND:

In the 2015 legislative session, the Utah Legislature passed H.B. 316, which adopted the newest international code updates. The updated codes referenced above are the newest editions of the international codes and are part of a comprehensive multi-year, ongoing review process to ensure that building standards are in accordance with the highest safety standards. The updated codes take effect on July 1, 2016, requiring the City to update its ordinance accordingly.

RECOMMENDATION:

Enact the proposed ordinance.

SUBMITTED BY:

Ed Domian, Chief Building Official

WEST VALLEY CITY, UTAH

ORDINANCE NO. _____

Draft Date: 04/25/2016___
Date Adopted: _____
Date Effective: _____

AN ORDINANCE AMENDING SECTIONS 16-1-101, 16-2-101, 16-4-101, 16-5-101, 16-11-101, 16-12-101, 16-13-101, AND 16-14-101 AND ENACTING SECTION 16-15-101 OF TITLE 16 OF THE WEST VALLEY CITY MUNICIPAL CODE TO ADOPT THE 2014 AND 2015 EDITIONS OF THE INTERNATIONAL CODES.

WHEREAS, the State of Utah adopts building codes as the minimal building standards for all buildings within the State; and

WHEREAS, from time to time, revised editions of the building codes must be adopted by local municipalities to replace the older building codes that are considered obsolete; and

WHEREAS, in order to comply with the actions of the State Uniform Building Codes Commission, the State Legislature and current State law, West Valley City wishes to adopt the 2014 edition of the National Electrical Code and 2015 editions of the International Building Code, the International Energy Conservation Code, the International Fuel Gas Code, the International Mechanical Code, the International Plumbing Code, the International Residential Code, the International Existing Building Code, and the International Property Maintenance Code to replace the previous 2011 and 2012 editions; and

WHEREAS, the City Council of West Valley City, Utah does hereby determine that it is in the best interests of the health, safety, and welfare of the citizens of West Valley City to amend Sections 16-1-101, 16-2-101, 16-4-101, 16-5-101, 16-11-101, 16-12-101, 16-13-101, and 16-14-101 and to enact Section 16-15-101 of the West Valley City Municipal Code;

NOW, THEREFORE, BE IT ORDAINED by the City Council of West Valley City, Utah, as follows:

Section 1. Repealer. Any other provision of the West Valley City Municipal Code found to be in conflict with this Ordinance is hereby repealed.

Section 2. Amendment. Sections 16-1-101, 16-2-101, 16-4-101, 16-5-101, 16-11-101, 16-12-101, 16-13-101, and 16-14-101 of the West Valley City Code are hereby amended as follows:

16-1-101. ADOPTION OF INTERNATIONAL BUILDING CODE.

(1) For the purpose of providing minimum standards to safeguard life or limb, health, property and public welfare by regulating and controlling the design, construction, quality of materials, use and occupancy, location and maintenance of the buildings and structures and certain equipment within the City, the entire ~~2012~~ 2015 edition of the International Building Code, as promulgated by the International Code Council, including any amendments that have been or may be made by the State of Utah ~~through the Utah Uniform Building Codes Commission~~, is hereby adopted with such deletions, modifications, exceptions, and other amendments as set forth in Section 16-1-102. The International Building Code, as adopted above, is hereby fully incorporated as if set herein in its entirety, with the amendments as set forth in Section 16-1-102, and from the effective date of this Chapter, the provisions thereof shall be controlling within the corporate limits of the City.

(2) Pursuant to Section 10-3-711, Utah Code Annotated, 1953 as amended, one copy of the International Building Code has been filed for use and examination by the public in the City Recorder's Office.

16-2-101. ADOPTION OF INTERNATIONAL MECHANICAL CODE.

(1) For the purpose of providing minimum standards to safeguard life or limb, health, property and public welfare by regulating and controlling the design, construction, installation, quality of materials, location, operation and maintenance or use of heating, ventilating, cooling, refrigeration systems, incinerators and other miscellaneous heat-producing appliances with the City, the entire ~~2012~~ 2015 edition of the International Mechanical Code, including any amendments that have been or may be made by the State of Utah ~~through the Utah Uniform Building Codes Commission~~, is hereby adopted as promulgated by the International Code Council. The International Mechanical Code is

hereby fully incorporated as if set out at length herein, and from the effective date of this Chapter, the provisions thereof shall be controlling within the corporate limits of the City.

(2) Pursuant to Section 10-3-711, Utah Code Annotated, 1953 as amended, one copy of the International Mechanical Code has been filed for use and examination by the public in the City Recorder's Office.

16-4-101. ADOPTION OF THE INTERNATIONAL PLUMBING CODE.

(1) For the purpose of providing minimum requirements and standards for the protection of the public health, safety and welfare by regulation the erection, installation, alteration, addition, repair, relocation, replacement, and maintenance or use of any plumbing system, the entire ~~2012~~ 2015 edition of the International Plumbing Code, including any amendments that have been or may be made by the State of Utah ~~through the Utah Uniform Building Codes Commission~~, is hereby adopted as promulgated by the International Code Council. The International Plumbing Code is hereby fully incorporated, as adopted above, as if set out at length herein, and from the effective date of this Chapter, the provisions thereof shall be controlling within the corporate limits of the City.

(2) Pursuant to Section 10-3-711, Utah Code Annotated, 1953 as amended, one copy of the International Plumbing Code has been filed for use and examination by the public in the City Recorder's Office.

16-5-101. ADOPTION OF THE NATIONAL ELECTRICAL CODE.

(1) For the purpose of safeguarding persons and property from hazards arising from the use of electricity, the entire ~~2011~~ 2014 edition of the National Electrical Code is hereby adopted as promulgated by the National Fire Protection Association, including any amendments that have been or may be made by the State of Utah ~~through the Utah Uniform Building Codes Commission~~. The National Electrical Code, as adopted above, is hereby fully incorporated as if set out at length herein, and from the effective date of this Chapter the provisions thereof shall be controlling within the corporate limits of the City.

(2) Pursuant to Section 10-3-711, Utah Code Annotated, 1953 as amended, ~~three copies~~ one copy of the National Electrical Code ~~have~~ has been filed for use and examination by the public in the City Recorder's Office prior to its adoption and, thereafter, at least one copy shall be in the City Recorder's Office at all times.

16-11-101. ADOPTION OF INTERNATIONAL RESIDENTIAL CODE.

(1) For the purpose of providing minimum standards to safeguard life or limb, health, property and public welfare by regulating and controlling the design, construction, quality of materials, use and occupancy, location and maintenance of single family dwellings, duplexes, townhouses and accessory buildings within the City, the entire ~~2012~~ 2015 edition of the International Residential Code as promulgated by the International Code Council, including any amendments that have been or may be made by the State of Utah ~~through the Utah Uniform Building Codes Commission~~, is hereby adopted with such deletions, modifications, exceptions, and other amendments as set forth in Section 16-11-102. The International Residential Code, as adopted above, is hereby fully incorporated as if set out herein in its entirety, with the amendments as set forth in Section 16-11-102; and, from the effective date of this Chapter, the provisions thereof shall be controlling within the corporate limits of the City.

(2) Pursuant to Section 10-3-711, Utah Code Annotated, 1953 as amended, one copy of the International Residential Code has been filed in the Office of the City Recorder for use and examination by the public.

16-12-101. ADOPTION OF INTERNATIONAL FUEL GAS CODE.

(1) For the purpose of providing minimum standards to safeguard the life or limb, health, property and public welfare by regulating and controlling the design, construction, installation, quality of materials, location, operation and maintenance or use of heating, ventilating, cooling, refrigeration systems, incinerators and other miscellaneous heat-producing appliances within the City, the entire ~~2012~~ 2015 edition of the International Fuel Gas Code, including any amendments that have been or may be made by the State of Utah ~~through the Utah Uniform Building Codes Commission~~, is hereby adopted as promulgated by the International Code Council. The International Fuel Gas Code is

hereby fully incorporated as if set out at length herein, and from the effective date of this Chapter, the provisions thereof shall be controlling within the corporate limits of the City.

(2) Pursuant to Section 10-3-711, Utah Code Annotated, 1953, as amended, one copy of the International Fuel Gas Code has been filed for use and examination by the public in the City Recorder's Office.

16-13-101. ADOPTION OF INTERNATIONAL ENERGY CONSERVATION CODE.

(1) For the purpose of providing minimum standards to safeguard the life or limb, health, property and public welfare by regulating and controlling the design of building envelopes to provide for adequate thermal resistance and minimal air leakage, and to regulate the selection of utility equipment for buildings within the City, the entire ~~2012~~ 2015 edition of the International Energy Conservation Code, including any amendments that have been or may be made by the State of Utah ~~through the Utah Uniform Building Codes Commission~~, is hereby adopted as promulgated by the International Code Council. The International Energy Conservation Code is hereby fully incorporated as if set out at length herein, and from the effective date of this Chapter, the provisions thereof shall be controlling within the corporate limits of the City.

(2) Pursuant to Section 10-3-711, Utah Code Annotated, 1953, as amended, one copy of the International Energy Conservation Code has been filed for use and examination by the public in the City Recorder's Office.

16-14-101. ADOPTION OF THE INTERNATIONAL PROPERTY MAINTENANCE CODE.

(1) For the purpose of prescribing regulations governing building maintenance for the interior and exterior of structures, space requirements and maximum occupancy, and heating, plumbing, light and ventilation in buildings, the entire ~~2012~~ 2015 edition of the International Property Maintenance Code ("IPMC") is hereby adopted as recommended by the International Code Council.

(2) Pursuant to §10-3-711, Utah Code Annotated, 1953 as amended, one copy of the Code has been filed for use and examination by the public in the office of the City Recorder prior to the adoption of this Ordinance.

Section 3. Enactment. Section 16-15-101 is hereby enacted as follows:

16-15-101. ADOPTION OF THE INTERNATIONAL EXISTING BUILDING CODE.

(1) For the purpose of providing alternative approaches to repair, alteration, and additions to existing buildings which do not comply with current building codes, and to avoid cost prohibitive retrofits in excess of the value of the existing building, the entire 2015 edition of the International Existing Building Code, including any amendments that have been or may be made by the State of Utah, is hereby adopted as recommended by the International Code Council.

(2) Pursuant to Section 10-3-711, Utah Code Annotated, 1953, as amended, one copy of the International Existing Building Code has been filed for use and examination by the public in the City Recorder's Office.

Section 4. Severability. If any provision of this Ordinance is declared to be invalid by a court of competent jurisdiction, the remainder shall not be affected thereby.

Section 5. Effective Date. This Ordinance shall take effect on July 1, 2016.

PASSED and APPROVED this _____ day of _____, 2016.

WEST VALLEY CITY

_____

MAYOR

ATTEST:

_____

CITY RECORDER

Item: _____
Fiscal Impact: N/A_____
Funding Source: _____
Account #: _____

Budget Opening Required: ☐

ISSUE:

A resolution supporting the Youth City Council's efforts to educate the youth of the City concerning the hazards of electronic cigarette usage.

SYNOPSIS:

This resolution declares the City Council's support of the Youth City Council's efforts and commends the Youth City Council's work to promote the health, safety, and welfare of the citizens of the City.

BACKGROUND:

The Youth City Council has observed a dramatic increase in the usage of electronic cigarettes by fellow students and young people in the City. Electronic cigarette usage represents a significant health hazard to students who often face significant pressure to use these products. The Youth City Council wishes to educate fellow students to ensure that the hazards of electronic cigarette usage are well known and to encourage students to avoid these products.

RECOMMENDATION:

Approve the proposed resolution.

WEST VALLEY CITY, UTAH

RESOLUTION NO. _____

A RESOLUTION SUPPORTING THE EFFORTS OF THE WEST VALLEY CITY YOUTH CITY COUNCIL TO EDUCATE THE CITY'S YOUTH CONCERNING THE HAZARDS OF ELECTRONIC CIGARETTES.

WHEREAS, the West Valley City Youth City Council (the "Youth Council") is established by ordinance to encourage the youth of the City to participate in City government and public affairs; and

WHEREAS, the Youth Council assists the City Council in understanding the challenges faced by the young people of the City; and

WHEREAS, the Youth Council has become aware of dramatically increasing rates of electronic cigarette use among youth in the City; and

WHEREAS, emerging research indicates that electronic cigarette use is connected to a number of health risks; and

WHEREAS, over 22,000 Utah junior high and high school students use electronic cigarettes on a regular basis; and

WHEREAS, the rate of electronic cigarette usage among junior high and high school students has doubled in Salt Lake County since 2013; and

WHEREAS, electronic cigarettes frequently contain nicotine, a highly addictive substance with substantial health risks for users; and

WHEREAS, the health of the citizens of West Valley City, particularly the youth of the City, is of paramount importance to the City; and

WHEREAS, the Youth Council desires to work to educate the youth of the City concerning the hazards of electronic cigarette usage;

NOW, THEREFORE, BE IT RESOLVED by the City Council of West Valley City, Utah, that the City Council supports the efforts of the Youth Council to discourage electronic cigarette usage among the youth of the City and that the City Council commends the Youth Council for their efforts and activism in promoting the health, safety, and welfare of the residents of the City.

PASSED, APPROVED, AND MADE EFFECTIVE this _____ day of _____, 2016.

WEST VALLEY CITY

_____
MAYOR

ATTEST:

_____
CITY RECORDER

Item #:	
Fiscal Impact:	$480,298.00
Funding Source:	N/A
Account #:	
Budget Opening Required:	N/A

ISSUE: A resolution approving an amendment to the Hale Centre Theatre Lease that provides a one-year extension.

SYNOPSIS:

Hale Centre Theatre desires to extend the current Lease for a period of one year.

BACKGROUND:

The City and Hale Centre Theatre entered into a Sublease Agreement as of March 1, 2007, which expires on December 31, 2016. Hale Centre Theatre is moving to Sandy where a new theatre is underway for their operations. However, the new theatre will not be completed prior to December 31, 2016, and Hale Centre Theatre will lose a year of operations unless the Sublease Agreement is amended and the Term is extended.

RECOMMENDATION:

City staff recommends approval of the resolution.

SUBMITTED BY:

J. Eric Bunderson, City Attorney

WEST VALLEY CITY, UTAH

RESOLUTION NO. _____

A RESOLUTION AUTHORIZING THE CITY TO ENTER INTO A FIRST AMENDMENT TO THE THEATRE SUBLEASE AGREEMENT WITH HALE CENTRE THEATRE FOR USE OF THE HALE CENTRE THEATRE FACILITY.

WHEREAS, West Valley City leases the West Valley City Harman Hall Community Theatre facility (hereinafter the "Theatre") from the Municipal Building Authority, and entered into a Theatre Sublease Agreement (hereinafter the "Sublease") with Hale Centre Theatre, a Utah non-profit corporation (hereinafter "Hale"), effective as of March 1, 2007; and

WHEREAS, Hale and the City desire to extend the term of the Sublease for a period of one year; and

WHEREAS, an amendment to the Sublease has been prepared for execution by and between the City and Hale, a copy of which is attached hereto and entitled "First Amendment to Theatre Sublease Agreement" (hereinafter the "Amendment"), that sets forth the rights, duties and obligations of each of the parties with respect thereto; and

WHEREAS, the City Council has determined that it is in the best interests of the health, safety, and welfare of the City and its residents to enter into this Amendment to the Sublease;

NOW, THEREFORE, BE IT RESOLVED by the City Council of West Valley City, Utah, that the Mayor is hereby authorized to sign the Amendment to the Sublease for and in behalf of West Valley City, subject to approval of the final form of the Amendment by the City Manager and the City Attorney's Office.

PASSED, APPROVED and MADE EFFECTIVE this _____ day of _____ _____, 2016.

WEST VALLEY CITY

_____
MAYOR

ATTEST:

_____
CITY RECORDER

FIRST AMENDMENT TO THEATRE SUBLEASE AGREEMENT
[West Valley City/Hale Centre Theatre]

This First Amendment to Theatre Sublease Agreement ("Amendment") is made as of April _____, 2016 by and between WEST VALLEY CITY, a municipal corporation of the State of Utah (the "City"), and HALE CENTRE THEATRE, a Utah nonprofit corporation ("Hale"). The City and Hale are jointly referred to as the "Parties."

RECITALS

A. The City, as sub-landlord, and Hale, as subtenant, entered into that certain Theatre Sublease Agreement effective as of March 1, 2007 (the "Agreement"), pursuant to which Hale leases from the City that certain theatre-in-the-round located at 3333 South Decker Lake Drive, West Valley City, Utah 84119 (as more particularly described in the Agreement, the "Theatre"). Any term used in this Amendment that is capitalized but not defined shall have the same meaning as set forth in the Agreement, as amended by this Amendment.

B. The City and Hale desire to amend the Agreement to extend the term of the Agreement to allow Hale to operate beyond the initial term of the Agreement.

AMENDMENT

NOW, THEREFORE, in consideration of the mutual covenants of the parties and other good and valuable consideration, the receipt and sufficiency of which are hereby acknowledged, the parties agree to amend the Agreement as follows:

1. **Amendment.** The Agreement is hereby amended as follows:

   1.1 Term of Agreement. Section 4 of the Agreement is hereby deleted in its entirety and the following is substituted in lieu thereof:

   > 4. TERM OF SUBLEASE. The initial term ("Initial Term") of this Agreement, and Hale's right to the use and occupancy of the Site, including the Theatre and the Theatre Parking Facilities, for the purposes and on the terms and conditions set forth herein, shall commence on the date of the execution of this Agreement by the parties and shall end on December 31, 2016 provided that commencing January 1, 2017, the term of this Agreement shall extend for one (1) year, terminating on December 31, 2017.

   1.2 Notices: Payment of Rent. Section 31.B. of the Agreement is hereby amended by adding the following to the end thereof:

After December 31, 2016, payments by Hale of base rent, variable rent, and any parking rent pursuant to Section 7 of this Agreement shall be made by check or wire transfer to West Valley City as follows:

West Valley City
3600 South Constitution Boulevard
West Valley City, UT 84119

1.3 Hale's Improvements and Additions.

Section 20.E. of the Agreement is hereby amended as follows:

All improvements, additions, and alterations made to the Theatre by Hale shall become the property of the City upon the expiration or termination of this Agreement and shall remain in, and be surrendered with, the Theatre without molestation, disturbance, or injury. Personal property, trade fixtures, and equipment of Hale shall remain the property of Hale and may be removed by Hale upon the expiration or earlier termination of this Agreement (or subsequent extension as extended). Notwithstanding the foregoing sentence, trade fixtures that will remain in the Theatre will be identified by the Parties prior to the expiration or earlier termination of this Agreement (or subsequent extension as extended).

1.4 Theatre Rental Payment.

1.4.1. Section 6.A. of the Agreement is hereby amended by adding the following to the end thereof:

The total rent payment amount for calendar year 2017 shall be $480,298.00 with monthly payments to the City of $40,024.00 being due by the 10th day of each month in which the payment is due.

1.4.2. Section 6.B. of the Agreement is hereby amended to read as follows:

Prior to January 1, 2017 the payment for the Parking Rent (if any) shall be made to the Trustee and shall be payable on or before the tenth (10th) day of the month for the previous month's rental, or as may be otherwise agreed upon by the panics in writing. Subsequent to January 1, 2017 the payment for Parking Rent (if any) shall be made to the City and shall be payable on or before the tenth (10th) day of the month for the previous months rental, or as may be otherwise agreed upon by the parties in writing.

1.5 Lawful Use; Negative Covenants of Hale. Section 17.B.(3) of the Agreement is amended to read as follows:

Abandon the Theatre during the Initial Term of this Agreement.

1.6 Deletion of Certain Provisions.

1.6.1. Sections 17.B(4), 17.B(10), 17.B(11), 50.A(1) and 50.A(2) of the Agreement are hereby deleted in their entirety.

1.6.2. The phrase "or the staging of theatrical performances in a location other than the Theatre," in Section 28.D. of the Agreement is deleted in its entirety.

1.7 Capital Repairs and Replacements. The second sentence of Section 22.C. of the Agreement is amended to read as follows:

The City shall establish a segregated interest-bearing account in a financial institution in West Valley City that shall hold the Capital Repair and Replacement Fund.

1.8 Breach by Hale. The language of section 28.D. of the Agreement is hereby deleted in its entirety and the following is substituted in lieu thereof:

Hale's abandonment or vacation of the Theatre during the Initial Term of this Agreement unless otherwise authorized by this Agreement.

1.9. Notice and Remedies for Breach. Section 30.B.(2) of the Agreement is amended to read as follows:

The City and Hale agree that because of the status of Hale as the exclusive tenant of the Theatre, and because the City is relying on the long-term residence of Hale in the Theatre in borrowing and expending funds for the design and construction of the Theatre, a breach of this Agreement by Hale's intentional abandonment of the Theatre prior to January 1, 2017 or other breach of this Agreement will cause great damage to the City in amounts that are difficult for the parties to calculate. Therefore, the City and Hale agree that should Hale breach this Agreement by the intentional abandonment of the Theatre and the staging of theatrical performances at another site prior to January 1, 2017, the City shall be entitled to collect from Hale, liquidated damages in the amount of Fifty Thousand Dollars ($50,000) per calendar year for each calendar year or portion of a calendar year remaining during the term of this Agreement. The liquidated damages shall be payable in addition to any other rights, causes of action,

or damages to which the City may be entitled pursuant to the terms of this Agreement or common law.

1.10 Notices: Payment of Rent. Section 31.B. is amended to read as follows:

B. Prior to December 31, 2016, payments by Hale of Base Rent, Variable Rent, and any Parking Rent pursuant to Section 7 of this Agreement shall be made by check or wire transfer to the trustee as follows:

Zions First National Bank
Corporate Trust Department
One South Main Street
Salt Lake City, Utah 84101
For Account of West Valley City Bond Fund

Subsequent to December 31, 2016, payments by Hale of Base Rent, Variable Rent, and any Parking Rent pursuant to Section 7 of this Agreement shall be made by check or wire transfer to West Valley City as follows:

West Valley City
3600 South Constitution Boulevard
West Valley City, UT 84119

1.11 Obligations under Indenture. Effective as of January 1, 2017, any and all references to the "Indenture" in the Agreement, and any obligations of Hale with respect to the Indenture, are deleted.

2. **General Provisions.** In the event of any conflict between the provisions of the Agreement and the provisions of this Amendment, the provisions of this Amendment shall control. Except as set forth in this Amendment, the Agreement is ratified and affirmed in its entirety. This Amendment shall inure to the benefit of, and be binding on, the parties and their respective successors and assigns. This Amendment shall be governed by, and construed and interpreted in accordance with, the laws (excluding the choice of laws rules) of the State of Utah. This Amendment may be executed in any number of duplicate originals or counterparts, each of which when so executed shall constitute in the aggregate but one and the same document.

(Signature page follows)

IN WITNESS WHEREOF, the City and Hale, intending to be legally bound, have executed this Amendment on the respective dates set forth below, to be effective as of the date first set forth above.

CITY:

WEST VALLEY CITY,
a municipal corporation of the State of Utah

_____
Mayor

Date: _____

ATTEST:

_____
City Recorder

APPROVED AS TO FORM:
West Valley City Attorney's Office

By: _____
Date: _____

HALE:

HALE CENTRE THEATRE,
a Utah nonprofit corporation

By: _____

Name: MARK A. DIETLEIN

Its: PRES / CEO

Date: 4/14/16

Item:
Fiscal Impact: $3,733,931.80
Funding Source: SLCO Grant / General Funds
Account #: 45-9610-40750-37171-0000

Budget Opening Required: ☐

ISSUE:

UCCC Basement Construction

SYNOPSIS:

Completing the basement construction of the Utah Cultural Celebration Center for the purpose of expanding the operational capacity of the center.

BACKGROUND:

When the Utah Cultural Celebration Center was originally built, the basement was not completely developed and constructed. This project will complete the basement and provide the additional conference rooms, multipurpose use rooms, gallery storage rooms, class rooms and many amenities that are needed to expand the UCCC operations to the basement. The existing gallery storage space did not provide adequate archiving space or a self-contained environmental vault for traveling exhibits. This project will allow adequate space for archiving and the special vault. The basement completion will provide additional space and opportunities to further the art and culture needs of our City and the entire Wasatch Front. Salt Lake County has pledged to support this expansion and completion of the UCCC Basement in the amount of $2,500,000.00 matching funds.

This project was advertised for General Contractor's pre-qualification. Five (5) general contractors were pre-qualified to bid the project. Four (4) responded with a bid, Cameron Construction, Layton Construction, R&O Construction and Paulsen Construction. Paulsen Construction's bid was withdrawn.

The following is the result of the sealed bids.

Company	Bid Amount
Layton Construction	$3,733,931.80
R&O Construction	$4,162,900.00
Cameron Construction	$4,680,982.00

RECOMMENDATION:

Approve the construction proposal of the Utah Cultural Celebration Center from Layton Construction as the lowest responsible bid.

SUBMITTED BY:

Hagop Arslanian Sr., Director of Facilities and Construction Management

WEST VALLEY CITY, UTAH

RESOLUTION NO. _____

A RESOLUTION AWARDING A CONTRACT TO LAYTON CONSTRUCTION TO COMPLETE THE BASEMENT OF THE UTAH CULTURAL CELEBRATION CENTER.

WHEREAS, proposals were solicited from qualified contractors for the completion of the basement of the Utah Cultural Celebration Center (the "Work"); and

WHEREAS, Layton Construction Company, LLC (herein "Layton") submitted the lowest responsible bid for said Work; and

WHEREAS, Layton meets all other requirements of the proposal specifications; and

WHEREAS, the City Council of West Valley City, Utah, does hereby determine that it is in the best interest of the citizens of West Valley City to award the contract for said Work to Layton;

NOW, THEREFORE, BE IT RESOLVED by the West Valley City Council as follows:

1. Layton is hereby awarded the contract to perform the Work, contingent upon execution of a contract agreeable to the City.

2. Said contract shall be in an amount not to exceed $3,733,931.80, with authorization to spend an amount not to exceed $3,920,700.00 through change orders.

3. The Mayor is hereby authorized to execute a contract with Layton to perform the Work, subject to the final approval of the contract by the City Manager and the City Attorney's Office.

PASSED, APPROVED and **MADE EFFECTIVE** this _____ day of _____, 2016.

WEST VALLEY CITY

_____
MAYOR

ATTEST:

_____

CITY RECORDER

PAULSEN
CONSTRUCTION

General Contractor • Construction Management • Design Build

April 26, 2016

EDA Architects Inc.
The Boston Building
9 Exchange Place, Suite 1100
Salt Lake City, UT 84111

Attn. Joe Prudden

Re: Utah Cultural Celebration Center Bid

Dear Mr. Prudden

Thank you and your client for selecting Paulsen Construction as a short listed firm to bid on the above mentioned project. Unfortunately, it was brought to my attention by our estimator that we had some cells in our spread sheet that did not populate pricing to the bottom line and we ended up with a substantial shortfall in our bid. Therefore, Paulsen Construction would like to formally withdraw our bid of $3,374,056.

Should yourself or your client need any further information on this please let me know.

Once again, thank you for the consideration and we look forward to working with you and EDA on upcoming projects.

Respectfully,

Harold Saunders
Director of Business Development

Cc: John Paulsen

3075 South 230 West Salt Lake City, Utah 84115-3454
phone- (801) 484-5545 fax- (801) 484-9730 e-mail- john@paulsenconstruction.com

DOCUMENT 00 41 00

BID FORM

PART 1 GENERAL

1.1 BIDDER

A. Name: Layton Construction Company, LLC

B. Address: 9090 South Sandy Parkway

C. City, State, Zip: Sandy, UT 84070

D. Telephone: 801-568-9090

E. E-mail: powens@laytonconstruction.com

F. Facsimile: 801-568-1490

G. Federal Tax Identification Number: 87-0660059

H. Bidder holds License Number: 4616944-5501

Issued on 12/7/2000 by the Utah State Department of Commerce, Division of Occupational and Professional Licensing. Bidder is licensed to practice as a Contractor. License renewal date is 11/30/2017.

1.2 NOTICE

A. Pursuant to Section 58-55-6(2)(g). Utah Code Annotated (UCA), it is unlawful to submit a Bid for work for which a license is required under Chapter 55 of Title 58, UCA, by a person or other business entity not licensed or accepted from licensure as a contractor under Chapter 55 of Title 58, UCA. Pursuant to Section 58-556(3), UCA, contracts for the work may not be awarded to any person or other business entity that violates Section 58-556(2)(g), UCA, in submitting its bid.

1.3 CONSTRUCTION PROJECT

A. Project Name: *Utah Cultural Celebration Center Basement Construction*

B. Project No: *HA042016*

C. OWNER: West Valley City, a municipal corporation of the State of Utah, 3600 South Constitution Blvd. West Valley City, Utah 84119.

1.4 ADDENDA

A. Bidder hereby acknowledges receipt of the following Addenda.

One, Two, Three

(list Addenda numbers here)

1.5 SUBMITTALS

A. To Bid for the Work, Bidder is required to submit the Bid Documents consisting of the following:

Bid Form (Document 00 41 00)
Bid Schedule (Document 00 43 00)
Bidder Preference Form (Document 00 43 01) Non-submittal of this document will assume that no bidder preference will be given.
Bid Bond
Any supplements or post-bid supplements as found in Modifications or Instructions to Bidders (Document 00 21 14).

B. If Bidder receives notice after Bid Opening that OWNER is considering awarding the contract to the bidder, the Bidder is to submit the following documents:

1. ☒ Document 00 43 38 - Bidder Status Report
2. ☒ Document 00 43 36 - Subcontractor and Supplier Report
3. ☒ Document 00 52 00 - Agreement
4. ☒ Document 00 61 13 - Performance Bond
5. ☒ Document 00 61 14 - Payment Bond
6. ☒ Document 00 62 16 - Certificate of Insurance
7. ~~☐ Document 00 21 15 - Community Development Block Grant (CDBG)~~
8. ~~☐ Document 00 43 40 - Minority and Women Business Enterprises Reg. (CDBG)~~
9. ~~☐ Document 00 43 43 - Wage Determination Schedule (CDBG)~~
10. ~~☐ Document 00 43 44 - Waiver of Interest Affidavit (CDBG)~~

1.6 DEFINITIONS

A. Bid Documents: The Bid Documents consist of the Bid Form (Document 00 41 00), Bid Schedule (Document 00 43 00), bid Bond and any supplements or post-bid supplements as found in Modifications or Instructions to Bidders (Document 00 21 14).

B. Bid Bond: AIA Document A310 as published by the American Institute of Architects, 1736 N.Y. Ave. N.W. Washington, D.C. 20006 or one substantially the same and acceptable to the OWNER.

PART 2 COVENANTS

2.1 BIDDER TO ENTER INTO AN AGREEMENT

A. In General: Bidder agrees, if this Bid is accepted, to enter into a Construction Contract with the OWNER to perform and furnish all work specified or indicated in the Contract Documents at the Contract Time and Contract Price identified in the Agreement (Document 00 52 00).

B. Agreement Supplement: If it becomes necessary to further define the Work, contract Price, Contract Time or some other portion of the Construction Contract prior to signing the Agreement (Document 00 52 00), ENGINEER shall prepare an Agreement Supplement (Document 00 54 00) describing, such change. The necessity for preparing such a contract modification is the OWNER'S sole option. If the Agreement Supplement is acceptable to the Bidder, the Bidder agrees to execute Agreement Supplement prior to or concurrent with the execution of the Agreement (Document 00 52 00).

2.2 BIDDER ACCEPTS TERMS AND CONDITIONS

A. Bidder accepts all of the terms and conditions of the Bid Documents, including without limitation those dealing with the disposition of Bid Security.

B. Bidder will pick up, sign and submit the Agreement (Document 00 52 00) with the Bonds and other documents required in the Contract within ten (10) days after the date of OWNER'S Notice of Intent to Award the Construction Contract.

2.3 REPRESENTATION OF BIDDER

A. In submitting the Bid, Bidder represents, as more fully set forth in the Instructions to Bidders (Document 00 21 13), that:

1. Nature of the Work: Bidder has become familiar with the nature and extent of the Contract Documents, Work, site, locality, and all local conditions and laws and regulations that in any manner may affect cost, progress, performance or furnishing of the Work.

2. Surface and Subsurface Conditions: Bidder has studied carefully all reports and drawings of subsurface conditions and drawings of physical conditions that are identified in the Geotechnical Data (Document 00 31 32), (if any).

3. Underground Utilities: Bidder has reviewed and checked all information and data shown or indicated on the Contract Documents with respect to existing underground facilities at or contiguous to the site.

4. Bidder Investigation: Bidder has correlated the result of all observations, examinations, investigations, explorations, tests, reports and studies with the terms and conditions of the Contract Documents.

5. Discrepancy Resolutions: Bidder has given ENGINEER written notice of all conflicts, errors or discrepancies that Bidder has discovered in the Contract Documents and acknowledges that all written resolutions thereof, issued by ENGINEER prior to Bid Opening are acceptable to Bidder.

2.4 OWNER'S RIGHTS AT BID AWARD

A. Bidder agrees OWNER has the right to reject this Bid, or to award the Work or any part thereof to the undersigned at the prices stipulated. Bidder agrees to make no claim for damages for such rejection or award.

B. If the Bid is rejected, then the Bid Security shall be returned to the Bidder.

C. If the Bid is accepted, the OWNER will notify Bidder of OWNER'S intent to award the Construction contract to the Bidder. The Bidder shall have ten (10) days to sign and return the Agreement (Document 00 52 00). Performance Bond (Document 00 61 13), Payment Bond (Document 00 61 14) and Certificate of Insurance to the ENGINEER. If Bidder fails to sign the Agreement, the Bid Security, at OWNER'S option, shall be claimed and cashed and the amount thereof, paid to OWNER as liquidated damages for failure of the Bidder to comply with the terms of the Bid.

D. Bidder agrees the Bid may be rejected if the submittals listed in this Document or the Notice of Intent to Award is not submitted within the time listed in the Notice of Intent to Award.

2.5 NON-COLLUSION

A. Bidder agrees the Bid is genuine. The Bid is not made in the interest of or on behalf of any undisclosed person, firm or corporation.

B. Bidder has not directly or indirectly induced or solicited any other Bidder to submit a false or sham Bid.

C. Bidder has not solicited or induced any person, firm or corporation to refrain from bidding.

D. Bidder has not sought by collusion to obtain for itself any other advantage over any separate Bidder or over OWNER.

2.6 BID PRICING

A. Bidder will complete the Work for the prices listed in the Bid Schedule (Document 00 43 00). Bidder agrees that quantities for Unit Price Work are not guaranteed. (Refer to Article 11.7 of the General Conditions (Document 00 72 00).)

2.7 SUBSTANTIAL COMPLETION, PROJECT COMPLETION AND LIQUIDATED DAMAGES

A. Bidder agrees that the Work will be substantially complete and ready for final inspection on or before the expiration of the Contract Time indicated in the Agreement (Document 00 52 00).

B. Bidder agrees the Work will be complete and ready for final payment in accordance with Article 14.9 of the General Conditions (Document 00 72 00) on or before the expiration of the punch list time indicated in the Agreement (Document 00 52 00).

C. Bidder accepts the provisions of the Agreement (Document 00 52 00) as to liquidated damages in the event of failure to complete the Work on time and in accordance with the Contract Documents.

PART 3 EXECUTION

3.1 EFFECTIVE DATE

A. Bidder executes this Bid and declares it to be in effect as of 26th day of April, 20 16.

3.2 BIDDER'S SUBSCRIPTION

A. Bidder's Signature: _____

B. Please print Bidder's name here: Penn Owens

C. Title: Executive Vice President

END OF DOCUMENT 00 41 00

DOCUMENT 00 43 00

BID SCHEDULE

PART 1 GENERAL

1.1 DOCUMENT INCLUDES

A. Schedules of prices

B. Measurement and Payment provisions

1.2 CONSTRUCTION PROJECT

A. Project Name: ***Utah Cultural Celebration Center Basement Construction***

B. Project No: ***HA04261016***

C. OWNER: West Valley City Corporation, a municipal corporation of the State of Utah, 3600 South Constitution Blvd, West Valley City, Utah 84119.

1.3 SCHEDULE TO BE ADDED TO THE AGREEMENT

A. This Bid Schedule will be incorporated into the Agreement (Document 00 52 00) by reference.

B. When alternates are included in the Bid Schedule, Bidder shall provide Bids for each of the Alternates. Apparent low Bid will be the lowest Total Bid (Base Bids plus lowest Alternate Bid). Contract award will be based upon the lowest Total Bid.

C. Bidder further proposes to accept as full payment for the Work proposed herein in the amounts computed under the provisions of the Contract Documents and based on the unit prices provided in the Bid Proposal, it being expressly understood that the unit prices are independent of the exact quantities involved. Bidder agrees that the unit prices represent the true measure of the labor, materials and services required to furnish and install the item, including all allowances for overhead and profit for each type of work called for in these Contract Documents.

D. Refer to Measurement and Payment provisions for detailed descriptions of work to be included in each bid item.

1.4 SCHEDULE OF PRICES

A. Base Bid Schedule is composed of:

1. Schedule No. 1

B. The Schedules are provided on the pages following this paragraph.

C. Cost of the Work is as follows:

1. Base Bid – Schedule No. 1 $ 3,733,931.80

D. Payment Procedures: As per APWA Section 01 29 00.

BID SCHEDULE

Base Bid – Schedule No. 1

Utah Cultural Celebration Cneter Basement Construction

Item	Section	Description	Qty	Unit	Unit Price	Total Cost
1	01	General Conditions				$141,002.00
2	01-1	Equipment & Temp Facilities				$ 12,397.00
3	02	Demolition				$ 80,659.00
4	03	Concrete				$ 93,848.00
5	05	Metals				$108,188.00
6	06	Woods				$ 79,983.00
7	07	Thermal & Moisture				$ 27,925.00
8	08	Doors & Windows				$250,179.00
9	09	Finishes				$ 433,188.00
10	10	Specialties				$148,722.00
11	11	Kitchen Equipment				$155,200.00
12	12	Blinds				$ 11,100.00
13	14	Conveying Systems				$ 81,000.00
14	15	Mechanical				$604,432.00
15	16	Electrical				$1,009,702.00
16	17	Insurance				$ 28,972.00
17	18	Contingency				$300,000.00
18	19	Fee				$124,827.00
19	20	Bond/Safety				$ 42,607.80
20						
21						
22						
23						
24						
24						
26						
27						
28						
29						
30						
31						
32						
33						
34						
					TOTAL SCHEDULE NO. 1	$3,733,931.80

1.5 UNIT PRICE – MEASUREMENT AND PAYMENT

A. No separate payment will be made for completing items of work not specifically addressed in the Schedule of Pay Items below, and the cost of meeting these requirements shall be incidental to the other contract prices.

B. Base Bid Items: Schedule No. 1.

CUT AND PASTE M&P FROM M&P MASTER DOCUMENT AND PLACE BELOW.

END OF DOCUMENT 00 43 00

DOCUMENT 00 43 01

BIDDER PREFERENCE FORM

1.1 PREFERENCES

A. The City grants preferences to certain types of bidders. After reviewing the requirements below, please indicate which preferences apply to this bid.

B. City Provider Preference – the City provides a 1% preference to any bidder who is physically located within City limits.

1. ☐ Yes ☒ No - **City Provider preference**

C. Other Preferences – the City provides a 1% preference to any bidder who can meet ALL of the following criteria:

1. **Program for veteran hiring and recruitment** - To meet this criterion, the bidder must maintain an active program to recruit and employ veterans
   ☒ Yes ☐ No
2. **Safety** – To meet this criterion, the bidder must maintain an active safety training program
   ☒ Yes ☐ No
3. **Drug testing** – To meet this criterion, the bidder must maintain a drug testing protocol in accordance with applicable law
   ☒ Yes ☐ No
4. **Job training** – To meet this criterion, the bidder must maintain an active job training program for employees
   ☒ Yes ☐ No
5. **Health insurance** – To meet this criterion, the bidder must offer health insurance to all full time employees
   ☒ Yes ☐ No
6. **Nondiscrimination** – To meet this criterion, the bidder must have and enforce a policy prohibiting discrimination in accordance with Title 26 of the West Valley City Municipal Code
   ☒ Yes ☐ No

1.2 OTHER PROVISIONS

A. City reserves the right, in its sole discretion, to verify that a bidder qualifies for any preferences which may be claimed above. If a bid claims a preference but does not qualify for that preference, the City reserves the right to refuse to consider that bid.

END OF DOCUMENT 00 43 01

INTERIOR CONSTRUCTION SPECIALISTS, INC.

UTAH CULTURAL CELEBRATION CENTER
CLARIFICATIONS, UNIT RATES, EXCLUSIONS, ALLOWANCES & TERMS

PROJECT CLARIFICATIONS:

- We feel we can complete this work in 33 weeks
- Since Layton Construction built the UCCC, we have a working knowledge of the site and understand the complexity of the project
- Bid includes base bid number, acknowledgment of all three (3) addendums, bid bond (attached), and bid schedule, filled out with costs associated with each of our divisions.
- In regards to Section 1.5 of Document 00 43 00 (Bid Schedule), we are not submitting an "M&P" due to uncertainty on what we are to provide here. Any "measurement and payment" items are assumed as part of lump sum bid and documented in "Bid Schedule"
  - The items listed in the "Bid Schedule" shall be considered as sufficient to complete the work in accordance with the plans and specifications
  - Where work is to be performed at a lump sum price, the lump sum shall include all operations and elements necessary to complete the work.
- SFC2 – Clear epoxy sealer - we are proposing using a non-specified (substitute) sealant after discussions with different coatings subcontractor
- Elevators:
  - Specified speed is not possible due to rise of the elevator, base bid includes a speed of 100 fpm.
  - Specified feature (142123.2.3.b.4.f) is not available , and is not included
  - Car corridor fixtures include a tempered glass faceplate, not stainless steel
  - The sills (car and corridor) will be extruded aluminum , not nickel silver
  - Cab handrails are to be brushed aluminum, not stainless steel
  - The drive is to be non -regulative (Section 142123.2.4.a)
  - Temp use of elevator not included
- Includes waterproofing at foundation
- Have included pricing for kitchen zone acoustical tile
- We have included a full-time, dedicated job superintendent
- Final cleaning included in base price
- $300,000 project contingency included as per request
- Bid assumes that permanent power will be available by building
- Estimate is based on standard hours of operation
- We reserve the right to negotiate the contract
- Security is not included (future)
- New cable trays not included (electrical)

ALTERNATES:

- Add Alternate: Add *$45,028.17* for sales tax (we are assuming this is a tax exempt project)
- Add alternate: Add *$19,900* to bring lower level substrate (under concrete) to desired finish floor level

EXCLUSIONS:

- Builders Risk insurance
- Certificate of Insurance (will be provided at a later date if we are selected as GC)
- Payment or performance bonds – will be supplied later if selected as GC
- All special inspections and 3rd party testing (by Owner)
- Hazardous material abatement (by Owner)
- Expedition or quick-ship of any long lead items/equipment
- Utilities & generator power, if needed (by Owner)
- Weather conditions (Assumes work area will be contained/secured and dry)
- Televisions, Apple TV, Google player, Cisco Network switches, iPods and accessories, visual technology(by Owner)
- Sitework outside of temp road (by Owner)

- FF&E including residential appliances (by Owner)
- Dimensional letter Signage (by Owner)
- Marketing and Public Relations resources (by Owner)
- Water/vapor barrier (could not find on plans)
- Smoke doors on elevators
- Watt meters on mechanical system
- Permit fees (by owner)
- Fire sprinkler system to be demolishes and removed – we are not carrying temporary fire suppression for time period between demo of current system and install/activation of new system (no spec found)
- Data (by owner)

UNIT RATES:

- Project manager's hourly rate is $82.50
- Superintendent's hourly rate is $75.50
- Carpenter's hourly rate is $45.00
- Single management vehicle including fuel and insurance for one week is $275.00
- General Liability insurance rate is 1.05% of the cost of work

These Standard Terms and Conditions shall take precedence over and shall supersede any conflicting language in the Contract Documents, including the plans and specifications.

1. Layton's Assumptions, Clarifications, and Exclusions are the basis of Layton's price and therefor shall govern over other contract documents.
2. Layton shall not be responsible for any errors, conflicts, inconsistencies, or omissions in the contract documents or between the contract documents and existing conditions, building codes, or design requirements of the end user. Layton shall be entitled to rely on the accuracy of the documents provided to it.
3. Layton shall have no obligation to perform work if the Owner cannot show evidence of their ability to pay or if the Owner does not make payment.
4. The Owner shall provide the building permit and all connection fees, usage fees, and impact fees and be responsible for all pre-existing hazardous materials.
5. Layton shall have sole control over the Construction Schedule, sequences, and means and methods and no 3rd party beneficiary rights are granted to any party.
6. Layton shall only be required to indemnify indemnitees to the extent that Layton caused damages and the Owner shall indemnify and defend Layton against all claims associated with hazardous materials existing at the site.
7. Layton shall not be required to contract with any person or entity with whom Layton has reasonable objection.
8. Layton's labor, supervision, insurance, Subcontractor Default Insurance, and Bond costs shall be at billable rates.
9. All undisputed portions of Payments shall be due within 30 days of the Owner receiving Layton's payment application. All late payments shall accrue interest at a rate of 1 ½% per month.
10. Layton shall have no obligations to provide lien waivers or protect the project against lien for amount that Layton has not been paid.
11. Disputes shall be governed by the law local to the location of the project and decided in courts where the project is located.
12. Layton accepts no consequential, special, actual, or punitive damages. This shall not preclude the recovery of direct costs or liquidated damages.
13. A termination for cause shall not be converted to a termination for convenience and a termination for convenience shall not be converted to a termination for cause.
14. Neither party shall assign the agreement without the written consent of the other party.

THE AMERICAN INSTITUTE OF ARCHITECTS

AIA Document A310

Bid Bond

KNOW ALL MEN BY THESE PRESENTS, THAT WE Layton Construction Company, LLC

9090 South Sandy Parkway, Sandy, UT 84070

as Principal, hereinafter called the Principal, and Liberty Mutual Insurance Company

1340 Treat Blvd., Walnut Creek, CA 94597

a corporation duly organized under the laws of the State of MA

as Surety, hereinafter called the Surety, are held and firmly bound unto West Valley City

1355 West 3100 South, West Valley City, UT 84119

as Obligee, hereinafter called the Obligee, in the sum of Five Percent (5 %) of the total amount bid ----------

Dollars ($ ----------),

for the payment of which sum well and truly to be made, the said Principal and the said Surety, bind ourselves, our heirs, executors, administrators, successors and assigns, jointly and severally, firmly by these presents.

WHEREAS, the Principal has submitted a bid for Utah Cultural Celebration Center Basement Renovation

NOW, THEREFORE, if the Obligee shall accept the bid of the Principal and the Principal shall enter into a Contract with the Obligee in accordance with the terms of such bid, and give such bond or bonds as may be specified in the bidding or Contract Documents with good and sufficient surety for the faithful performance of such Contract and for the prompt payment of labor and materials furnished in the prosecution thereof, or in the event of the failure of the Principal to enter such Contract and give such bond or bonds, if the Principal shall pay to the Obligee the difference not to exceed the penalty hereof between the amount specified in said bid and such larger amount for which the Obligee may in good faith contract with another party to perform the Work covered by said bid, then this obligation shall be null and void, otherwise to remain in full force and effect.

Signed and sealed this 22nd day of April, 2016

Layton Construction Company, LLC
(Principal) (Seal)

(Witness)

By: CFO
(Title)

Liberty Mutual Insurance Company
(Surety) (Seal)

(Witness)

By:
Attorney-in-Fact Janet C. Rojo (Title)

CALIFORNIA ALL-PURPOSE ACKNOWLEDGMENT **CIVIL CODE § 1189**

A notary public or other officer completing this certificate verifies only the identity of the individual who signed the document to which this certificate is attached, and not the truthfulness, accuracy, or validity of that document.

State of California)
County of San Francisco)

On April 22, 2016 before me, M. Moody, Notary Public,
Date *Here Insert Name and Title of the Officer*

personally appeared Janet C. Rojo
Name(s) of Signer(s)

who proved to me on the basis of satisfactory evidence to be the person(s) whose name(s) is/are subscribed to the within instrument and acknowledged to me that he/she/they executed the same in his/her/their authorized capacity(ies), and that by his/her/their signature(s) on the instrument the person(s), or the entity upon behalf of which the person(s) acted, executed the instrument.

I certify under PENALTY OF PERJURY under the laws of the State of California that the foregoing paragraph is true and correct.

WITNESS my hand and official seal.

M. MOODY
COMM. #2051571
NOTARY PUBLIC-CALIFORNIA
SAN FRANCISCO COUNTY
My Comm. Expires Jan. 8, 2018

Signature
Signature of Notary Public

Place Notary Seal Above

OPTIONAL

Though this section is optional, completing this information can deter alteration of the document or fraudulent reattachment of this form to an unintended document.

Description of Attached Document

Title or Type of Document: _____ Document Date: _____

Number of Pages: _____ Signer(s) Other Than Named Above: _____

Capacity(ies) Claimed by Signer(s)

Signer's Name: _____
☐ Corporate Officer — Title(s): _____
☐ Partner — ☐ Limited ☐ General
☐ Individual ☐ Attorney in Fact
☐ Trustee ☐ Guardian or Conservator
☐ Other: _____
Signer Is Representing: _____

Signer's Name: _____
☐ Corporate Officer — Title(s): _____
☐ Partner — ☐ Limited ☐ General
☐ Individual ☐ Attorney in Fact
☐ Trustee ☐ Guardian or Conservator
☐ Other: _____
Signer Is Representing: _____

©2014 National Notary Association • www.NationalNotary.org • 1-800-US NOTARY (1-800-876-6827) Item #5907

THIS POWER OF ATTORNEY IS NOT VALID UNLESS IT IS PRINTED ON RED BACKGROUND.
This Power of Attorney limits the acts of those named herein, and they have no authority to bind the Company except in the manner and to the extent herein stated.

Certificate No. 7206605

American Fire and Casualty Company
The Ohio Casualty Insurance Company
Liberty Mutual Insurance Company
West American Insurance Company

POWER OF ATTORNEY

KNOWN ALL PERSONS BY THESE PRESENTS: That American Fire & Casualty Company and The Ohio Casualty Insurance Company are corporations duly organized under the laws of the State of New Hampshire, that Liberty Mutual Insurance Company is a corporation duly organized under the laws of the State of Massachusetts, and West American Insurance Company is a corporation duly organized under the laws of the State of Indiana (herein collectively called the "Companies"), pursuant to and by authority herein set forth, does hereby name, constitute and appoint, Betty L. Tolentino; Brian F. Cooper; Janet C. Rojo; K. Zerounian; Kevin Re; M. Moody; Maureen O'Connell; R.A Bass; Robert Wrixon; Susan Hecker; Virginia L. Black

all of the city of San Francisco, state of CA each individually if there be more than one named, its true and lawful attorney-in-fact to make, execute, seal, acknowledge and deliver, for and on its behalf as surety and as its act and deed, any and all undertakings, bonds, recognizances and other surety obligations, in pursuance of these presents and shall be as binding upon the Companies as if they have been duly signed by the president and attested by the secretary of the Companies in their own proper persons.

IN WITNESS WHEREOF, this Power of Attorney has been subscribed by an authorized officer or official of the Companies and the corporate seals of the Companies have been affixed thereto this 14th day of December, 2015.

American Fire and Casualty Company
The Ohio Casualty Insurance Company
Liberty Mutual Insurance Company
West American Insurance Company

By: David M. Carey
David M. Carey, Assistant Secretary

STATE OF PENNSYLVANIA ss
COUNTY OF MONTGOMERY

On this 14th day of December, 2015, before me personally appeared David M. Carey, who acknowledged himself to be the Assistant Secretary of American Fire and Casualty Company, Liberty Mutual Insurance Company, The Ohio Casualty Insurance Company, and West American Insurance Company, and that he, as such, being authorized so to do, execute the foregoing instrument for the purposes therein contained by signing on behalf of the corporations by himself as a duly authorized officer.

IN WITNESS WHEREOF, I have hereunto subscribed my name and affixed my notarial seal at Plymouth Meeting, Pennsylvania, on the day and year first above written.

COMMONWEALTH OF PENNSYLVANIA
Notarial Seal
Teresa Pastella, Notary Public
Plymouth Twp., Montgomery County
My Commission Expires March 28, 2017
Member, Pennsylvania Association of Notaries

By: Teresa Pastella
Teresa Pastella, Notary Public

This Power of Attorney is made and executed pursuant to and by authority of the following By-laws and Authorizations of American Fire and Casualty Company, The Ohio Casualty Insurance Company, Liberty Mutual Insurance Company, and West American Insurance Company which resolutions are now in full force and effect reading as follows:

ARTICLE IV – OFFICERS – Section 12. Power of Attorney. Any officer or other official of the Corporation authorized for that purpose in writing by the Chairman or the President, and subject to such limitation as the Chairman or the President may prescribe, shall appoint such attorneys-in-fact, as may be necessary to act in behalf of the Corporation to make, execute, seal, acknowledge and deliver as surety any and all undertakings, bonds, recognizances and other surety obligations. Such attorneys-in-fact, subject to the limitations set forth in their respective powers of attorney, shall have full power to bind the Corporation by their signature and execution of any such instruments and to attach thereto the seal of the Corporation. When so executed, such instruments shall be as binding as if signed by the President and attested to by the Secretary. Any power or authority granted to any representative or attorney-in-fact under the provisions of this article may be revoked at any time by the Board, the Chairman, the President or by the officer or officers granting such power or authority.

ARTICLE XIII – Execution of Contracts – SECTION 5. Surety Bonds and Undertakings. Any officer of the Company authorized for that purpose in writing by the chairman or the president, and subject to such limitations as the chairman or the president may prescribe, shall appoint such attorneys-in-fact, as may be necessary to act in behalf of the Company to make, execute, seal, acknowledge and deliver as surety any and all undertakings, bonds, recognizances and other surety obligations. Such attorneys-in-fact subject to the limitations set forth in their respective powers of attorney, shall have full power to bind the Company by their signature and execution of any such instruments and to attach thereto the seal of the Company. When so executed such instruments shall be as binding as if signed by the president and attested by the secretary.

Certificate of Designation – The President of the Company, acting pursuant to the Bylaws of the Company, authorizes David M. Carey, Assistant Secretary to appoint such attorneys-in-fact as may be necessary to act on behalf of the Company to make, execute, seal, acknowledge and deliver as surety any and all undertakings, bonds, recognizances and other surety obligations.

Authorization – By unanimous consent of the Company's Board of Directors, the Company consents that facsimile or mechanically reproduced signature of any assistant secretary of the Company, wherever appearing upon a certified copy of any power of attorney issued by the Company in connection with surety bonds, shall be valid and binding upon the Company with the same force and effect as though manually affixed.

I, Gregory W. Davenport, the undersigned, Assistant Secretary, of American Fire and Casualty Company, The Ohio Casualty Insurance Company, Liberty Mutual Insurance Company, and West American Insurance Company do hereby certify that the original power of attorney of which the foregoing is a full, true and correct copy of the Power of Attorney executed by said Companies, is in full force and effect and has not been revoked.

IN TESTIMONY WHEREOF, I have hereunto set my hand and affixed the seals of said Companies this 22nd day of April, 20 16.

By: Gregory W. Davenport
Gregory W. Davenport, Assistant Secretary

Not valid for mortgage, note, loan, letter of credit, currency rate, interest rate or residual value guarantees.

To confirm the validity of this Power of Attorney call 1-610-832-8240 between 9:00 am and 4:30 pm EST on any business day.

LMS_12873_122013

Item #:	
Fiscal Impact:	n/a
Funding Source:	UTA for possible Betterment
Account #:	45-9610-40750-75202-0000
Budget Opening Required:	No

ISSUE:

Agreement between West Valley City and the Utah Transit Authority for Bus Rapid Transit Changes and Betterments

SYNOPSIS:

An agreement to facilitate a change in 3500 South BRT lanes and routes to facilitate the construction of a new road and traffic signal at 3030 West.

BACKGROUND:

The next phase of the Fairbourne Station roadways will necessitate the construction of a new road at 3030 West between Lehman Avenue and 3500 South. 3030 West will be signalized at 3500 South, with left turn lanes from westbound 3500 South to southbound 3030 West. Currently the lanes needed for the turn lanes are occupied by UTA's Bus Rapid Transit (BRT) lines. UTA agrees to give up the use of the BRT lanes between 3030 West and Market Street, in exchange for the construction of two new BRT stations on 3030 West and the relocation of an existing station from Lehman Avenue to Market Street.

UTA also desires to increase the length of the canopy on the two new BRT stations on 3030 West, and agrees to pay the city the additional cost for the increased length in canopy. The cost of the betterment will be known after the city bids the Fairbourne Station Phase II Roadway Project this spring.

A permit for the work on 3500 South has been received from UDOT.

RECOMMENDATION:

Approval and Execution of the Agreement

SUBMITTED BY:

Daniel Johnson, P.E., City Engineer

WEST VALLEY CITY, UTAH

RESOLUTION NO. _____

A RESOLUTION APPROVING AN AGREEMENT BETWEEN WEST VALLEY CITY AND THE UTAH TRANSIT AUTHORITY FOR THE REROUTING OF BUS RAPID TRANSIT SERVICE IN FAIRBOURNE STATION.

WHEREAS, West Valley City (the "City") desires to enter into an agreement with the Utah Transit Authority ("UTA") to reroute bus rapid transit service to better serve the needs of residents, visitors, and patrons within the Fairbourne Station area; and

WHEREAS, UTA is willing and able, with the City's assistance, to reroute said bus rapid transit service; and

WHEREAS, an agreement has been prepared for execution by and between the City and UTA, a copy of which is attached hereto and entitled "Agreement Between West Valley City and the Utah Transit Authority for Bus Rapid Transit Changes and Betterments" (hereinafter the "Agreement"), that sets forth the rights, duties, and obligations of each of the parties with respect thereto; and

WHEREAS, the City Council of West Valley City, Utah, does hereby determine that it is in the best interests of the health, safety, and welfare of the citizens of West Valley City to approve the Agreement with the Utah Transit Authority;

NOW, THEREFORE, BE IT RESOLVED by the City Council of West Valley City, Utah, that the Agreement is hereby approved in substantially the form attached, and that the Mayor is hereby authorized to execute said Agreement for and in behalf of West Valley City, subject to approval of the final form of the Agreement by the City Manager and the City Attorney's Office.

PASSED, APPROVED and MADE EFFECTIVE this _____ day of _____ _____, 2016.

WEST VALLEY CITY

_____
MAYOR

ATTEST:

_____
CITY RECORDER

AGREEMENT

BETWEEN WEST VALLEY CITY

AND THE UTAH TRANSIT AUTHORITY

FOR BUS RAPID TRANSIT CHANGES AND BETTERMENTS

THIS AGREEMENT (the "Agreement") is entered into the _____day of _____, 2016, by and between West Valley City, (the "City") and the Utah Transit Authority (the "UTA"). UTA and the City are collectively referred to herein as the "Parties."

RECITALS

WHEREAS, UTA operates a Bus Rapid Transit corridor on 3500 South ("BRT") as part of its public transit system; and

WHEREAS, new development in the City's area known as Fairbourne Station requires new streets and an alternative traffic configuration; and

WHEREAS, the City desires that a portion of the BRT lanes on 3500 South be removed to allow for the construction of a new traffic signal at 3030 West and 3500 South; and

WHEREAS, the City and UTA desire to cooperate in the development of improvements to allow for the construction of a new road, the rerouting of BRT service, and the construction and relocation of appropriate BRT stations; and

WHEREAS, the City and UTA desire to coordinate efforts and commit to certain obligations as set forth herein for the foregoing changes in order to facilitate reliable transit service in West Valley City; and

WHEREAS, UTA desires to participate in betterments in the construction of the proposed BRT Stations; and

WHEREAS, this Agreement is entered into pursuant to the authority of applicable Utah law;

NOW, THEREFORE, in consideration of the premises and for and in consideration of the valuable consideration described herein, the receipt and sufficiency of which are hereby acknowledged, the Parties hereby agree as follows:

AGREEMENT

1. City Obligations. The City shall perform the following:

   A. Installation of New Road and Traffic Signal at 3030 West 3500 South. The City has contracted for design of, and shall install, (1) a new road at 3030 West from 3500 South to Lehman Avenue and (2) a new traffic signal at 3030 West 3500 South. The new 3030 West shall be constructed pursuant to and in accordance with the design drawings dated April 14, 2016, as reviewed and approved by

UTA. In the event the design drawings are modified, City shall provide the revised drawings to UTA for review and approval. City acknowledges that all design must meet UTA's BRT Design Criteria, and that City has been provided with a copy of the same. The traffic signal will be constructed to UDOT specifications and the signal will be operated and maintained by UDOT. The traffic signal shall include a left-turn lane turn-signal from west-bound 3500 South onto the new 3030 West. The new 3030 West shall be a dedicated City-owned road.

B. Two (2) New BRT Stations and a Relocation of One (1) BRT Station. The City shall install two (2) new BRT Stations on 3030 West, and shall relocate an existing BRT Station from Lehman Avenue to Market Street in Fairbourne Station. The locations of the BRT Stations are identified on the map attached hereto as Exhibit "A" and incorporated herein. The BRT Stations shall be built substantially like the design attached hereto as Exhibit "B", which is hereby incorporated herein. City represents and warrants that the BRT Stations shall beconstructed in accordance with ADA requirements.

C. Power Connections. The City shall install conduit and facilities sufficient to allow UTA to power ticket vending machines at each BRT station described in Subsection 1(B) above.

D. Coordination. The City agrees to coordinate construction and installation activities with UTA to facilitate continued and uninterrupted service for UTA patrons, including providing a written plan for access and circulation during construction and for transition to the station locations. City shall provide signage and information to the public sufficiently in advance of construction commencement and changes to BRT service.

E. The City shall bid the construction of the station canopies and the extensions (as further described below) and shall submit the complete bids showing the price difference obtained in the bidding process to UTA for approval. The City shall not accept a bid for the canopy extension prior to obtaining UTA approval for the cost. The City represents and warrants that the City has complied with all applicable City, State and Federal procurement requirements in connection with procuring contractors for the design and construction described herein.

F. City shall designate a Project Manager for the work described herein. The City's initial Project Manager shall be Dan Johnson (801-963-3228, Daniel.Johnson@wvc-ut.gov). City may change the Project Manager by giving written notice to UTA's Project Manager.

2. UTA's Obligations. UTA shall perform the following:

A. BRT Lanes on 3500 South. UTA shall permit the Utah Department of Transportation ("UDOT") to convert the BRT lanes depicted in Exhibit A into

dedicated southbound turn lanes with a separate left-turn signaled lane onto the new 3030 West Street.

B. Reroute BRT. UTA shall reroute the BRT line such that the new street and new BRT Stations are utilized. The reroute shall follow the traffic pattern as set forth on the maps attached hereto as Exhibit "C and D" and incorporated herein.

C. Station Canopies. UTA standard canopy length is 22'-2". UTA desires to increase the length of the canopy, contingent upon UTA's final approval of the price of the extension in the bids obtained by the City . If UTA agrees to the canopy extension, UTA agrees to pay the cost of the extension to the City upon completion of installation of the canopies.

D. UTA shall provide ticket vending machines for each BRT station.

E. UTA shall designate a Project Manager for the work described herein. UTA's initial Project Manager shall be _____, _____@rideuta.com, 801-___-____. UTA may change the Project Manager by giving written notice to the City's Project Manager.

3. Conditions Precedent.

A. The following are conditions precedent to the City's obligations pursuant to Section 1 of this Agreement and to UTA's obligations pursuant to Section 2 of this Agreement:

i. Full UDOT approval for the conversion of the 3500 South BRT lanes between Market Street and 3030 West into southbound turn lanes, including approval of signalized separate left-turn lane as a part of the traffic signal.

ii. Full UDOT approval for the intersection at 3030 West 3500 South, including a traffic signal with separate left-turn signals.

iii. Full UDOT approval for the BRT reroute, as necessary.

iv. Any other required approvals, including but not limited to any UTA, UDOT, FHWA, City building permits, or other governmental approvals, necessary to permit the changes to the BRT lanes and the reroute of BRT service.

B. If any of the conditions precedent in this Section 3 are not satisfied by December 31, 2018, the Parties shall have no further obligations and this Agreement shall terminate.

4. Schedule for Obligations. Once the new 3030 West street is complete and the new signal pursuant to Section 1.A. is powered and functional, the BRT lanes identified in Exhibit "A" shall be dedicated turn lanes. The new 3030 West street and signal shall be complete on or before December 31, 2018. In the event City has not commenced

construction work on or before July 1, 2018, UTA shall have the right but not the obligation, to terminate this Agreement.

5. Approvals Required. The City shall be responsible for all permits and other legal requirements related to the new 3030 West street and BRT Stations. UTA shall assist the City, as requested by the City's Project Manager, in obtaining all UDOT approvals. The City shall submit to UTA's Project Manager for review and comment, the design plans for the BRT Stations and any modifications or requested changes thereto. Neither the City nor UTA shall be liable for any failure to obtain UDOT or other governmental approvals.

6. General Provisions. The following provisions are also integral parts of this Agreement:

   A. Captions. The headings used in this Agreement are inserted for reference purposes only and shall not be deemed to define, limit, extend, describe, or affect in any way the meaning, scope or interpretation of any of the terms or provisions of this Agreement or the intent hereof.

   B. Counterparts. This Agreement may be signed in any number of counterparts with the same effect as if the signatures upon any counterpart were upon the same instrument. All signed counterparts shall be deemed to be one original.

   C. Severability. The provisions of this Agreement are severable, and should any provision hereof be void, voidable, unenforceable or invalid, such void, voidable, unenforceable or invalid provision shall not affect the other provisions of this Agreement.

   D. Waiver of Breach. Any waiver by a party of any breach of any kind or character whatsoever by another, whether direct or implied, shall not be construed as a continuing waiver of or consent to any subsequent breach of this Agreement.

   E. Cumulative Remedies. The rights and remedies of the Parties shall be construed cumulatively, and none of such rights and remedies shall be exclusive of, or in lieu or limitation of, any other right, remedy or priority allowed by law.

   F. Entire Agreement. The Parties expressly agree that this Agreement and the Exhibits attached hereto constitute the full and complete understanding and agreement of the Parties, and that this Agreement supersedes all prior understandings, agreements, and conversations between the parties, whether oral or written. Any prior negotiations, correspondence, or understandings related to the subject matter of this Agreement shall be deemed to be merged into this Agreement and the attached exhibits.

   G. Amendment. This Agreement may not be modified except by an instrument in writing signed by the Parties hereto.

H. Assignability. This Agreement shall bind and inure to the benefit of the assignees, heirs, and successors in interest of the Parties. The Parties shall not assign any rights or delegate any obligations hereunder without the prior written consent of the other Parties.

I. Time of Essence. Time is of the essence in this Agreement.

J. Interpretation. This Agreement shall be interpreted, construed, and enforced according to the substantive laws of the state of Utah.

K. Notice. Any notice or other communication required or permitted to be given hereunder shall be deemed to have been received (a) upon personal delivery or actual receipt thereof or (b) within three (3) days after such notice is deposited in the United States mail, certified mail postage prepaid and addressed to the Parties at their respective addresses, addressed to the Project Manager for each party. All approvals of any Party hereto shall be effective only if given in writing or via e-mail.

L. Governmental Immunity. All parties are governmental entities under the Governmental Immunity Act, therefore, consistent with the terms of the Act, the Parties agree that each Party is responsible and liable for any wrongful or negligent acts which it commits or which are committed by its agents, officials, or employees. The Parties do not waive any defenses or limits of liability otherwise available under the Governmental Immunity Act and all other applicable law, and the Parties maintain all privileges, immunities, and other rights granted by the Act and all other applicable law.

IN WITNESS WHEREOF, the Parties to this Agreement have executed this Agreement as of the day and year first above written.

(signatures follow)

WEST VALLEY CITY

By:_____

Name:_____

Title: Mayor

ATTEST:

_____

City Recorder

APPROVED AS TO FORM

_____

City Legal Counsel

UTAH TRANSIT AUTHORITY

By:_____

Name: _____

Title:_____

By:_____

Name: _____

Title:_____

APPROVED AS TO FORM

_____

UTA Legal Counsel

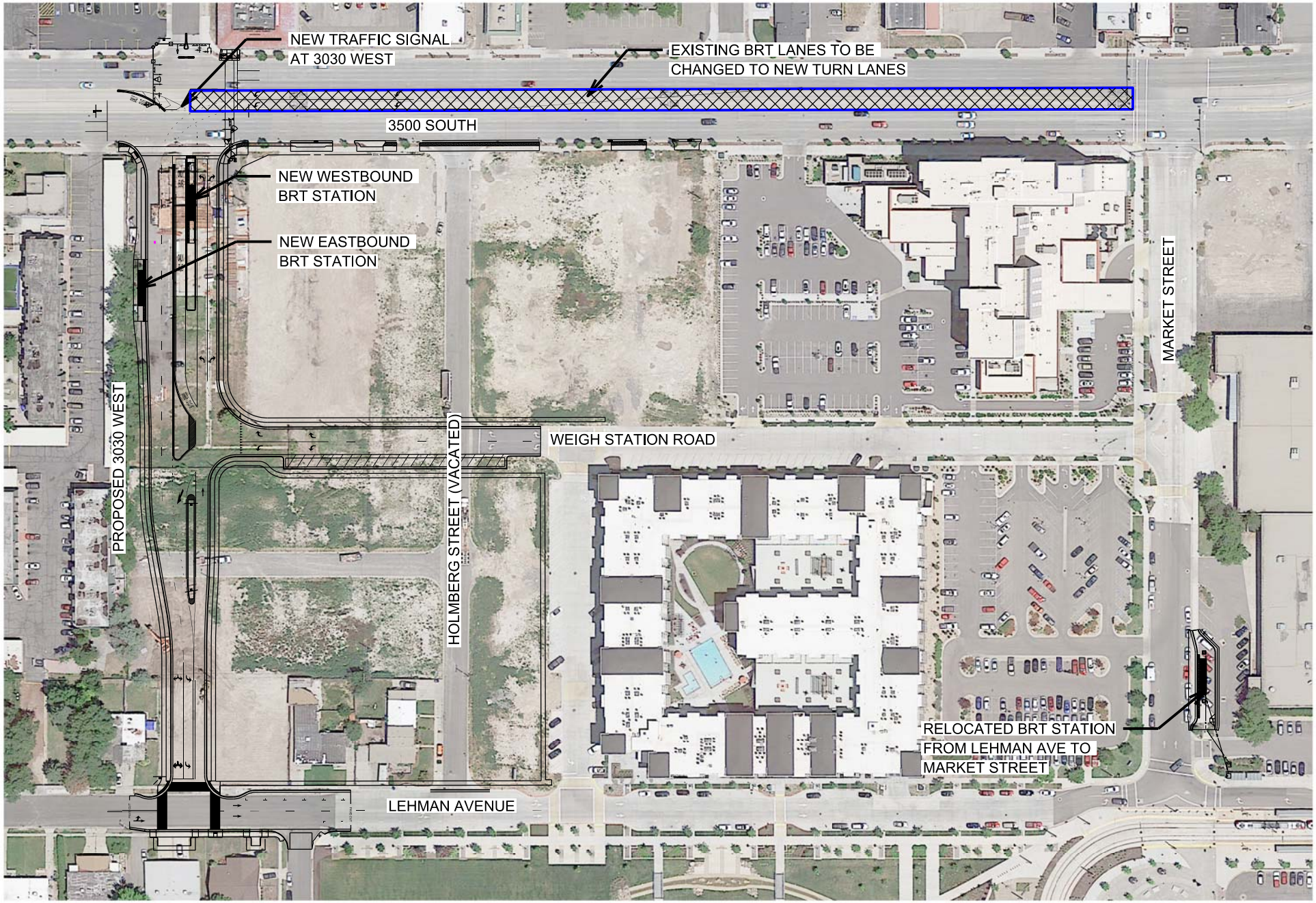

'EXHIBIT A'
PROPOSED ROADWAY & TRANSIT IMPROVEMENTS
AT FAIRBOURNE STATION

NOTES:
1. SIDEWALK TO BE 4" THICK WITH 4" COMPACTED BASE COURSE IN ALL DRIVE APPROACHES.

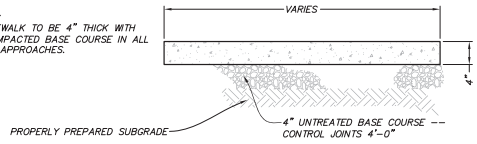

A — SIDEWALK SECTION
NOT TO SCALE

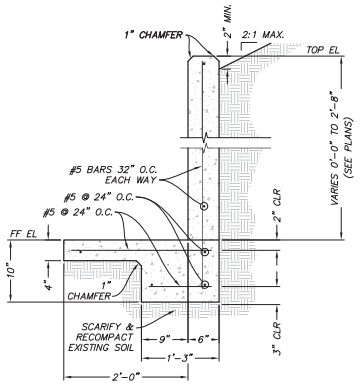

B — TYPICAL RETAINING WALL DETAIL
NOT TO SCALE

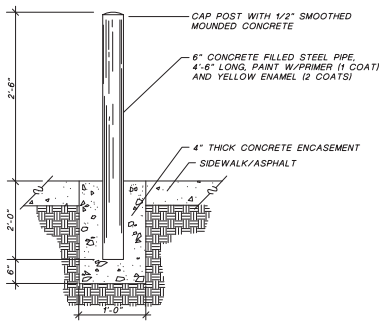

D — CONCRETE FILLED BOLLARD DETAIL
NOT TO SCALE

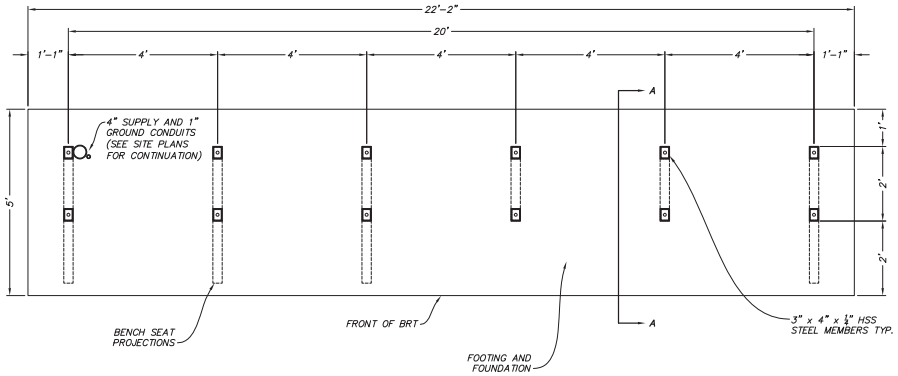

C — TYPICAL BRT STOP FOUNDATION DETAIL
NOT TO SCALE

SEE NOTE 18, SHEET 2

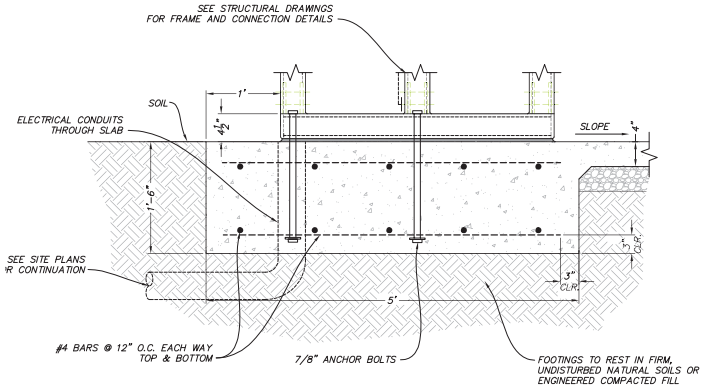

A–A — FOUNDATION SECTION
NOT TO SCALE

REV	DATE	Description
0	APR.2007	ISSUED FOR BID
A	3/19/07	SUBMITTED FOR FINAL REVIEW

UTA
UTAH TRANSIT AUTHORITY

Approved By:

Designed By: CLN
Drawn By: CLN
Checked By: –
Approved By: –

3500 SOUTH BRT PROJECT

DETAILS

Scale: VARIES
CADD Filename: –
Submittal Date: APRIL 2007
UTA Contract No.: UT-07-010VT
Drawing No.: D01
Sheet No.:

GENERAL NOTES

- PROVIDE TAMPER PROOF HARDWARE WHERE EXPOSED, TYP.
- ALL ALUMINUM (PANS, SEAT, & GLASS HOLD DOWNS) SHALL BE OF "AASM".
- ALL STEEL SHALL BE OF "AESS".
- PLUG AND PAINT HOLES THAT ARE DRILLED FOR ACCESS OF BOLT TIGHTENING.

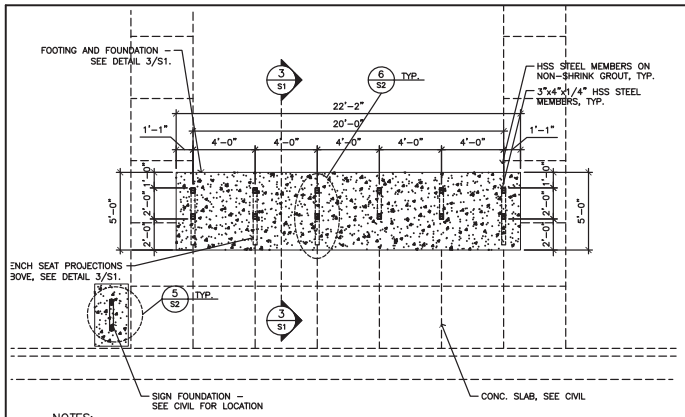

NOTES:

1. ALL WORK SHALL CONFORM W/ THE REQUIREMENTS OF THE 2003 IBC AS ACCEPTED BY S.L. CITY/COUNTY.
2. FOOTINGS TO REST IN FIRM, UNDISTURBED, NATURAL SOILS OR ENGINEERED COMPACTED FILL.

1 S1 FOUNDATION PLAN

0 1 2 3 4 8 FEET
SCALE: 1/4" = 1'-0"

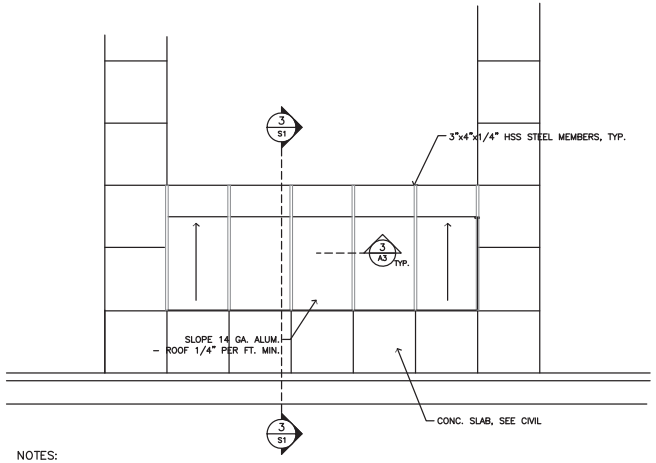

NOTES:

1. ROOF DESIGN LOAD: SNOW LOAD = 30 P.S.F.

2 S1 ROOF PLAN

0 1 2 3 4 8 FEET
SCALE: 1/4" = 1'-0"

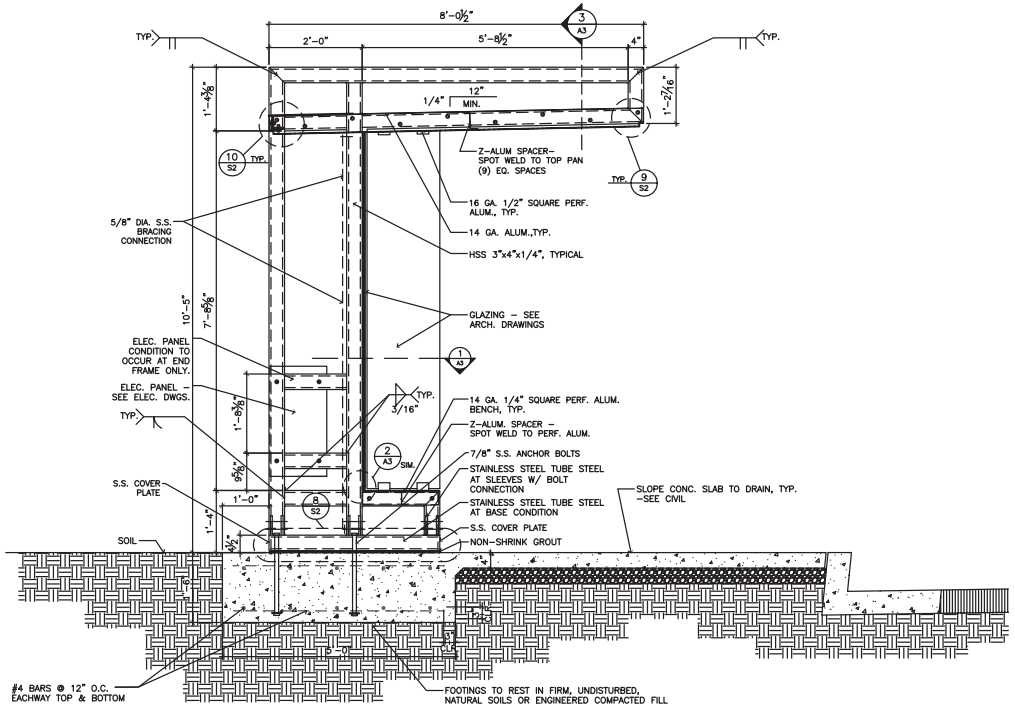

3 S1 TYPICAL FRAME ELEVATION

0
SCALE: 3/4" = 1'-0"

REV	DATE	Description
0	APR.2007	ISSUED FOR BID
A	3/19/07	SUBMITTED FOR FINAL REVIEW

UTA UTAH TRANSIT AUTHORITY

Approved By:

Designed By: BHW
Drawn By: ACJ
Checked By: RES
Approved By: HJ

3500 SOUTH BRT PROJECT

FOOTING & FOUNDATION PLAN – DETAILS

Scale:
CADD Filename:
Submittal Date: APRIL 2007
UTA Contract No.: UT-07-010VT
Drawing No.: S1
Sheet No.:

GENERAL NOTES

- PROVIDE TAMPER PROOF HARDWARE WHERE EXPOSED, TYP.
- ALL ALUMINUM (PANS, SEAT, & GLASS HOLD DOWNS) SHALL BE OF "AASM".
- ALL STEEL SHALL BE OF "AESS".
- PLUG AND PAINT HOLES THAT ARE DRILLED FOR ACCESS OF BOLT TIGHTENING.

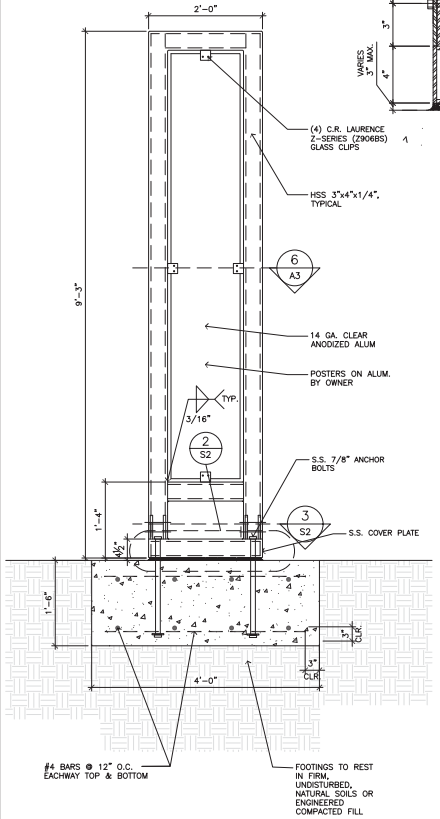

5 / S2 SIGN ELEVATION
SCALE: 1" = 1'-0"

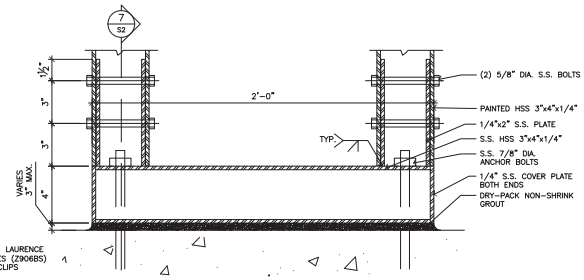

2 / S2 SIGN DETAIL - SECTION
SCALE: 3" = 1'-0"

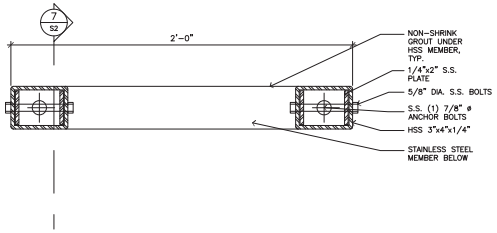

3 / S2 SIGN DETAIL - PLAN
SCALE: 3" = 1'-0"

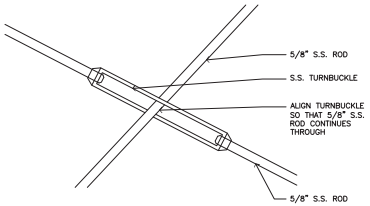

4 / S2 S.S. ROD DETAIL
SCALE: 3" = 1'-0"

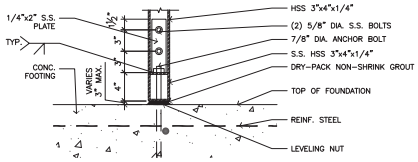

SECTION
7 / S2 BASE PLATE DET. - TYP.
SCALE: 1-1/2" = 1'-0"

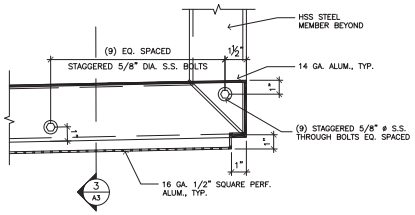

9 / S2 TYP. CORNER DETAIL
SCALE: 3" = 1'-0"

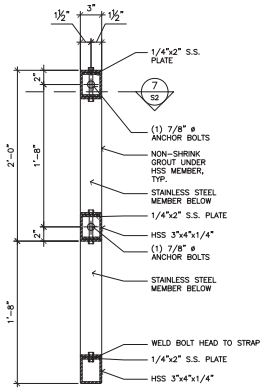

PLAN
6 / S2 BASE PLATE DET. - TYP.
SCALE: 1-1/2" = 1'-0"

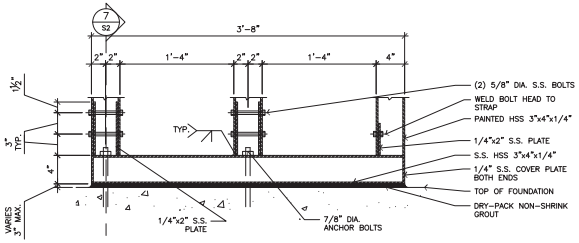

ELEVATION
8 / S2 BASE PLATE DET. - TYP.
SCALE: 1-1/2" = 1'-0"

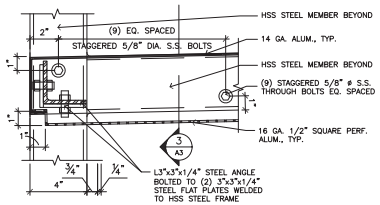

10 / S2 TYP. CORNER DETAIL
SCALE: 3" = 1'-0"

REV	DATE	Description
1	04.25.07	ISSUED FOR BID

RES Consulting, LLC

BHW Engineers, LLC

Submitted By: _____

UTA UTAH TRANSIT AUTHORITY

Approved By: _____

Designed By:	BHW
Drawn By:	ACJ
Checked By:	RES
Approved By:	HJ

3500 SOUTH BRT PROJECT

STRUCTURAL DETAILS

Scale:	
CADD Filename:	
Submittal Date:	
UTA Contract No:	UT-07-010VT
Drawing No:	S2
Sheet No:	

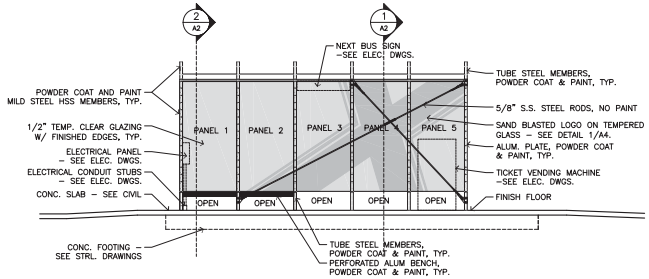

1 A1 NORTH ELEVATION

SCALE: 1/4" = 1'-0"

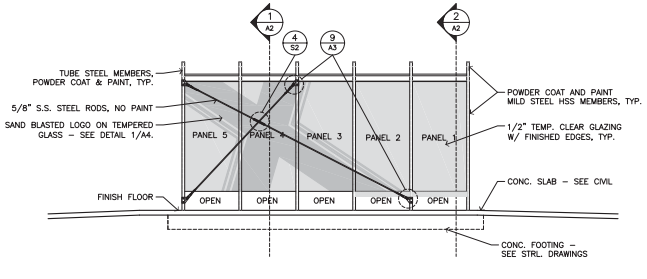

2 A1 SOUTH ELEVATION

SCALE: 1/4" = 1'-0"

NOTE:
TRASH RECEPTACLE SHALL BE POWDER COAT AND PAINTED TO MATCH SHELTER

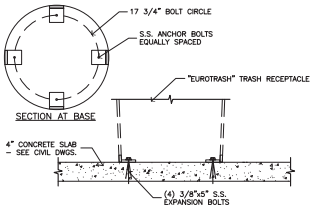

3 A1 TRASH RECEPTICLE

SCALE: 1" = 1'-0"

GENERAL NOTES

- PROVIDE TAMPER PROOF HARDWARE WHERE EXPOSED, TYP.
- ALL ALUMINUM (PANS, SEAT, & GLASS HOLD DOWNS) SHALL BE OF "AASM".
- ALL STEEL SHALL BE OF "AESS".
- ALL ALUM., STEEL, AND S.S. SHALL BE POWDER COATED AND PAINTED, U.N.O.
- ALL GLAZING SHALL BE TEMPERED.
- COORDINATE ALL DRILLED HOLES FOR ELEC. CONDUIT W/ ELEC. DRAWINGS
- PLUG AND PAINT HOLES THAT ARE DRILLED FOR ACCESS OF BOLT TIGHTENING.

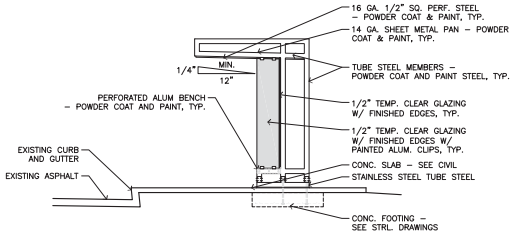

5 A1 WEST ELEVATION

SCALE: 1/4" = 1'-0"

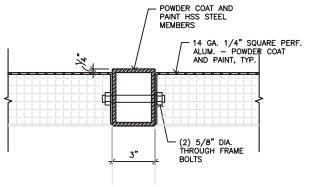

7 A1 BENCH DETAIL

SCALE: 3" = 1'-0"

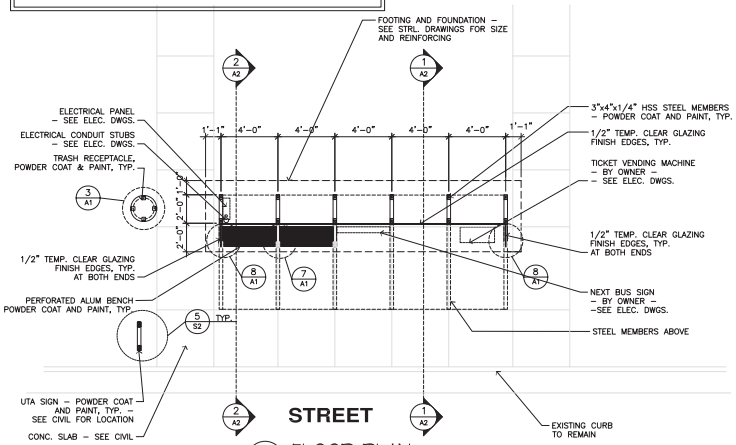

4 A1 FLOOR PLAN

SCALE: 1/4" = 1'-0"

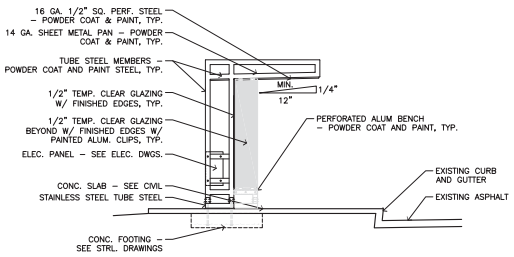

6 A1 EAST ELEVATION

SCALE: 1/4" = 1'-0"

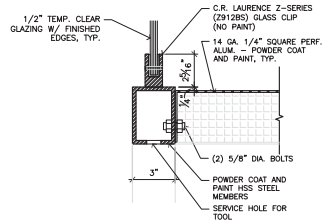

8 A1 BENCH DETAIL

SCALE: 3" = 1'-0"

REV	DATE	Description
1	04.25.07	ISSUED FOR BID

RES Consulting, LLC

BHW Engineers, LLC

Submitted By: _____

UTA UTAH TRANSIT AUTHORITY

Approved By: _____

Designed By: RES/ACJ
Drawn By: ACJ
Checked By: RES
Approved By: HJ

3500 SOUTH BRT PROJECT

FLOOR PLAN – EXTERIOR ELEVATIONS

Scale:
CADD Filename:
Submittal Date:
UTA Contract No.: UT-07-010VT
Drawing No.: A1
Sheet No.:

GENERAL NOTES

- PROVIDE TAMPER PROOF HARDWARE WHERE EXPOSED, TYP.
- ALL ALUMINUM (PANS, SEAT, & GLASS HOLD DOWNS) SHALL BE OF "AASM".
- ALL STEEL SHALL BE OF "AESS".
- ALL ALUM., STEEL, AND S.S. SHALL BE POWDER COATED AND PAINTED, U.N.O.
- ALL GLAZING SHALL BE TEMPERED.
- COORDINATE ALL DRILLED HOLES FOR ELEC. CONDUIT W/ ELEC. DRAWINGS
- PLUG AND PAINT HOLES THAT ARE DRILLED FOR ACCESS OF BOLT TIGHTENING.

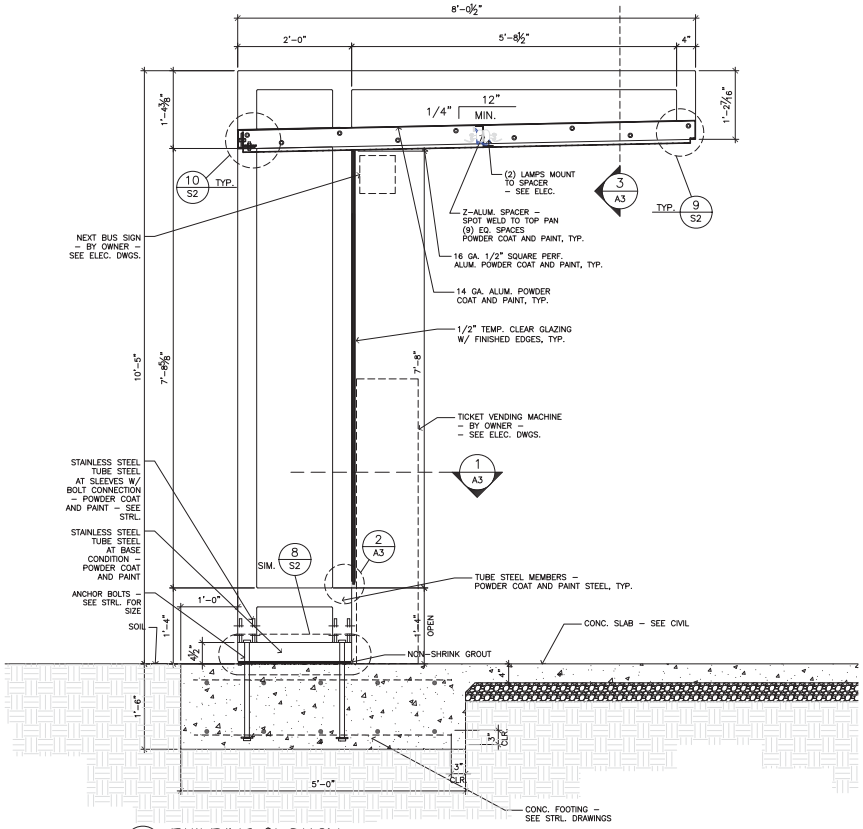

1 A2 BUILDING SECTION
SCALE: 1" = 1'-0"

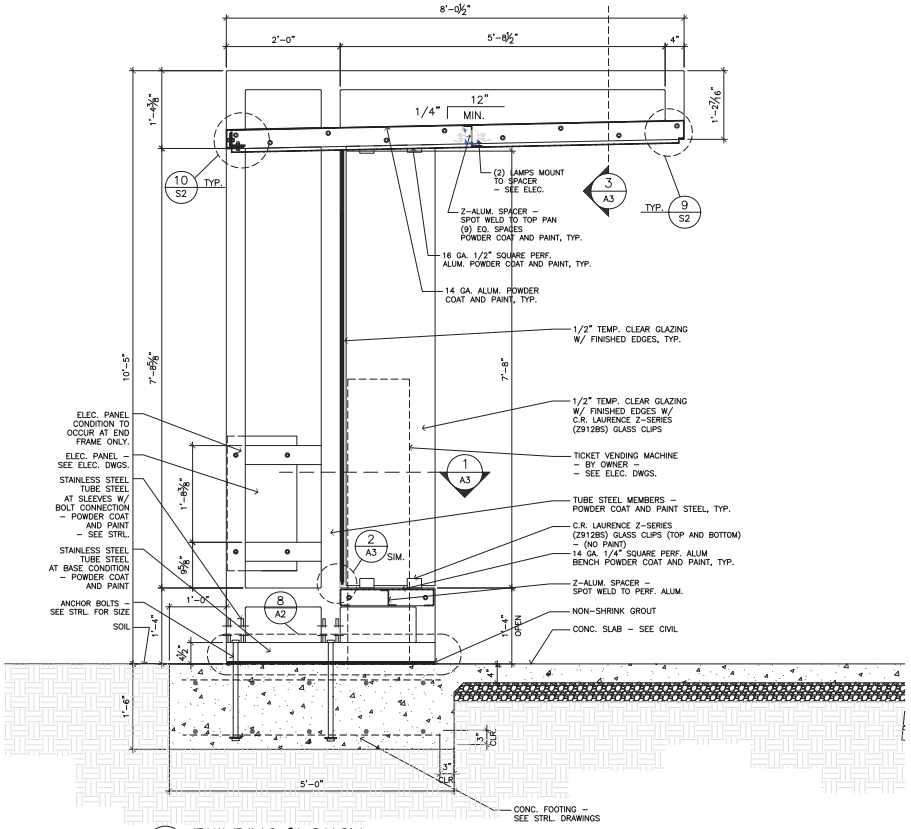

2 A2 BUILDING SECTION
SCALE: 1" = 1'-0"

REV	DATE	Description
1	04.25.07	ISSUED FOR BID

RES Consulting, LLC

BHW Engineers, LLC

Submitted By: _____

UTA UTAH TRANSIT AUTHORITY

Approved By: _____

Designed By: RES/ACJ
Drawn By: ACJ
Checked By: RES
Approved By: HJ

3500 SOUTH BRT PROJECT

BUILDING SECTIONS

Scale:
CADD Filename:
Submittal Date: –
UTA Contract No.: UT-07-010VT
Drawing No.: A2
Sheet No.:

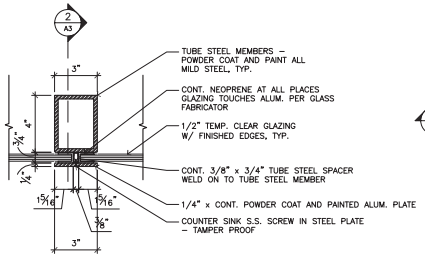

1 A3 GLASS DETAIL - PLAN

SCALE: 3" = 1'-0"

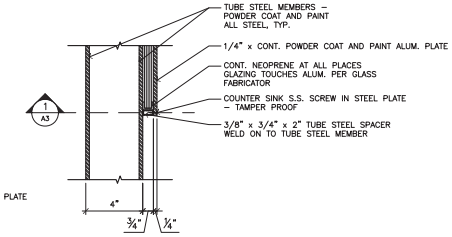

2 A3 GLASS DETAIL

SCALE: 3" = 1'-0"

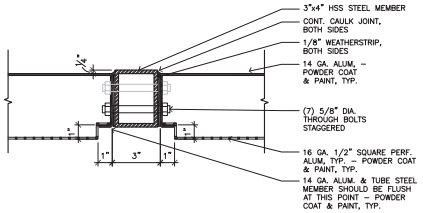

3 A3 ROOF DETAIL

SCALE: 3" = 1'-0"

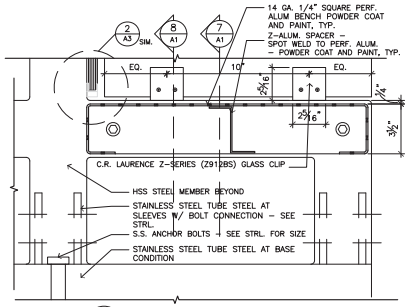

4 A3 BENCH DETAIL

SCALE: 3" = 1'-0"

GENERAL NOTES

- PROVIDE TAMPER PROOF HARDWARE WHERE EXPOSED, TYP.
- ALL ALUMINUM (PANS, SEAT, & GLASS HOLD DOWNS) SHALL BE OF "AASM".
- ALL STEEL SHALL BE OF "AESS".
- ALL ALUM., STEEL, AND S.S. SHALL BE POWDER COATED AND PAINTED, U.N.O.
- ALL GLAZING SHALL BE TEMPERED.
- COORDINATE ALL DRILLED HOLES FOR ELEC. CONDUIT W/ ELEC. DRAWINGS
- PLUG AND PAINT HOLES THAT ARE DRILLED FOR ACCESS OF BOLT TIGHTENING.

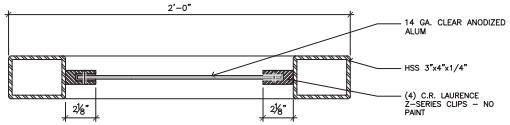

6 A3 SIGN DETAIL - PLAN

SCALE: 3" = 1'-0"

7 A3 NOT USED

SCALE: 3" = 1'-0"

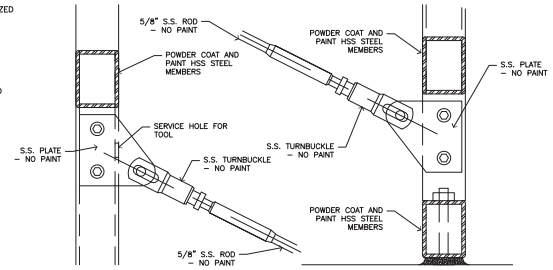

TOP CONDITION

BOTTOM CONDITION

NOTE:
CUSTOM TIE ROD AND CLEVIS BY TRIPYRAMID OR SIMILAR. SEE SPECS. FOR SUBMITTAL REQUIREMENTS.

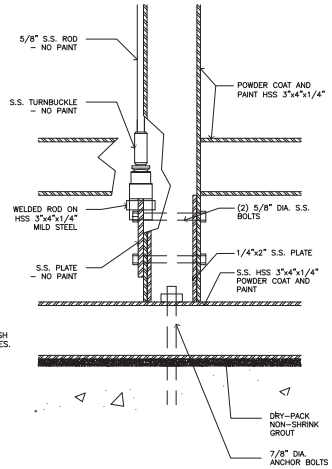

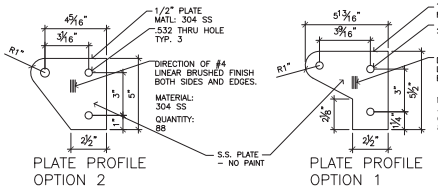

PLATE PROFILE OPTION 2

PLATE PROFILE OPTION 1

5 A3 NOT USED

SCALE: 1" = 1'-0" 2 FEET

8 A3 NOT USED

SCALE: 3" = 1'-0"

9 A3 STEEL TIE ROD PLATE - TURNBUCKLE

SCALE: 3" = 1'-0"

REV	DATE	Description
1	04.25.07	ISSUED FOR BID

RES Consulting, LLC

BHW Engineers, LLC

Submitted By: _____

UTA UTAH TRANSIT AUTHORITY

Approved By: _____

Designed By: RES/ACJ
Drawn By: ACJ
Checked By: RES
Approved By: HJ

3500 SOUTH BRT PROJECT

DETAILS

Scale:
CADD Filename:
Submittal Date:
UTA Contract No.: UT-07-010VT
Drawing No.: A3
Sheet No.:

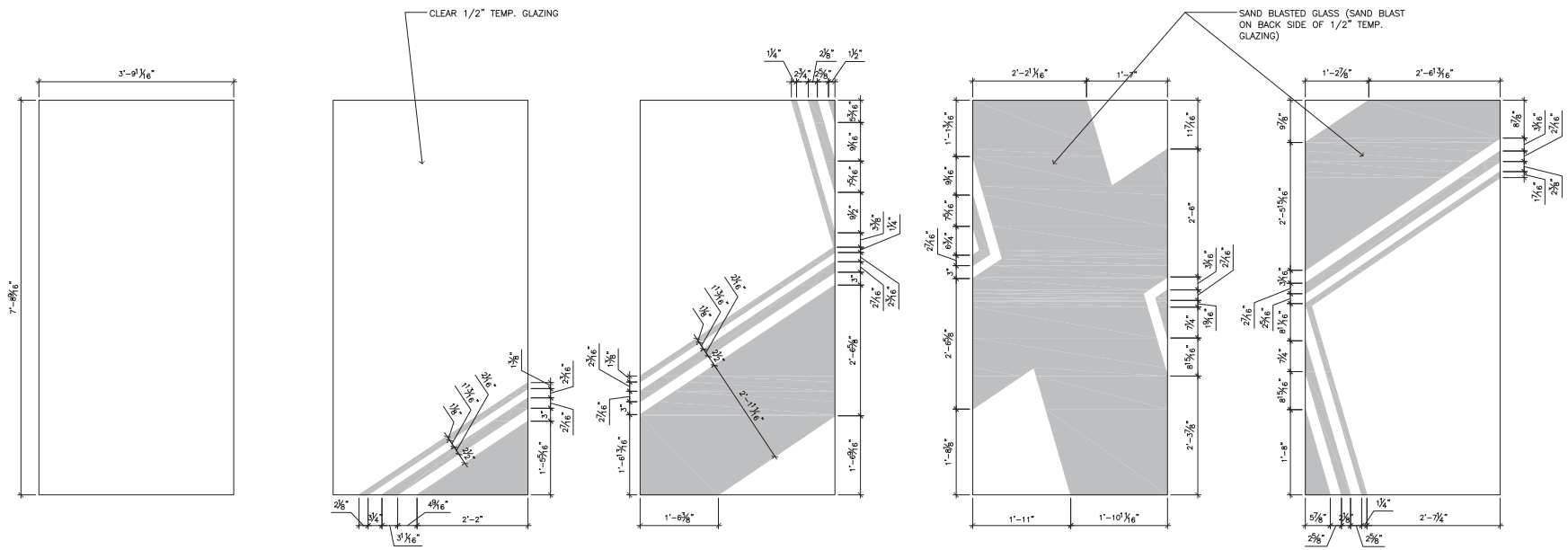

1 / A4 GLAZING DETAIL

SCALE: 1" = 1'-0"

REV	DATE	Description
1	04.25.07	ISSUED FOR BID

RES Consulting, LLC

BHW Engineers, LLC

Submitted By: _____

UTA UTAH TRANSIT AUTHORITY

Approved By: _____

Designed By: RES/ACJ
Drawn By: ACJ
Checked By: RES
Approved By: HJ

3500 SOUTH BRT PROJECT

GLAZING DETAILS

Scale:
CADD Filename:
Submittal Date:
UTA Contract No.: UT-07-010VT
Drawing No.: A4
Sheet No.:

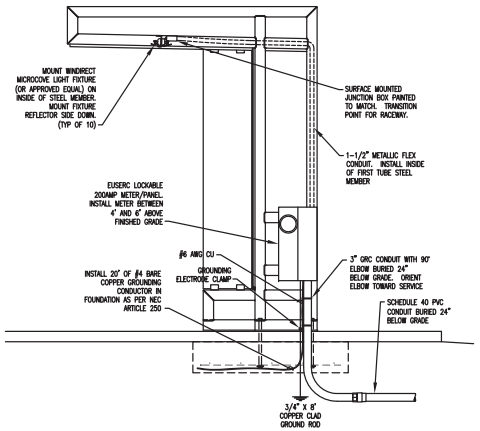

SESCTION B–B ELEVATION
UNDERGROUND SERVICE
1/2" = 1'–0'

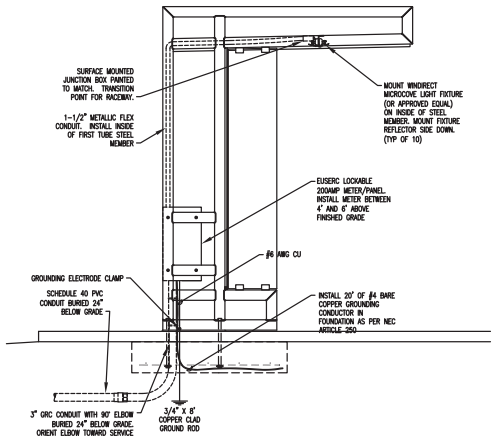

SECTION A–A ELEVATION
UNDERGROUND SERVICE
1/2" = 1'–0'

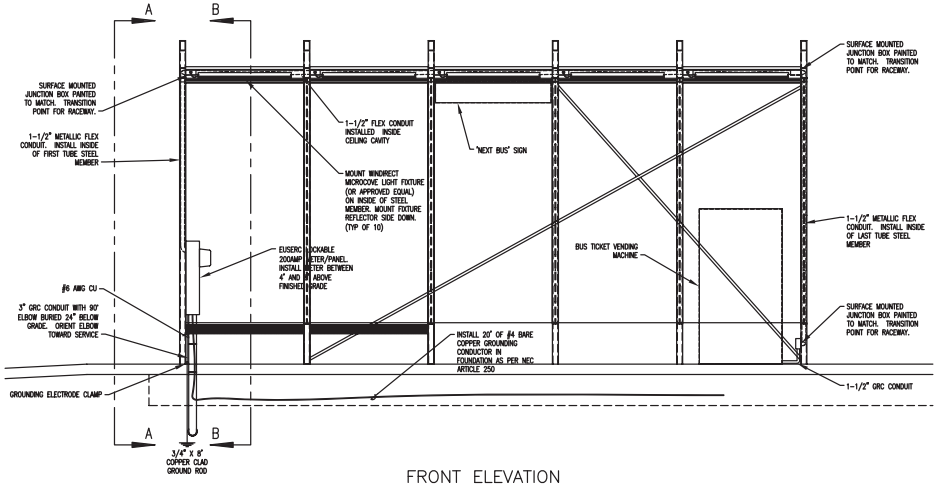

FRONT ELEVATION
UNDERGROUND SERVICE
1/2" = 1'–0'

FIXTURE SCHEDULE

TYPE	DESCRIPTION	CATALOG NUMBER	VOLTS	LAMPS
A1	WINDIRECT FLUORESCENT MICRO COVE SLIM MOUNT 36" SLIM MOUNT MOUNTED INSIDE METAL CANOPY	P1–MC–136T5/HO–120V–MCVA–RA–X WINONA LIGHTING	120	1–F39W T5/HO

PANELBOARD SCHEDULE

PANEL P–1 TYPE _____ 240/120 VOLTS 1 PH 3 W

MOUNTING: ___ FLUSH, X SURFACE

EUSERC COMBINATION

DIMENSIONS: 15 W, 5.5 D (in.), 29 H

LOCATION: SEE DRAWING

AMP 200

MAINS: ___ LUGS, X BREAKER, ___ SUBFEED LUGS, ___ ISO GROUND, ___ 200% NEUTRAL

BRANCH BREAKERS

ITEM	AMPS	POLE	WIRE SIZE	CIR. NO.	L. PHASE LOAD A	L. PHASE LOAD B	R. PHASE LOAD A	R. PHASE LOAD B	CIR. NO.	AMPS	POLE	WIRE SIZE	ITEM
LIGHTS *	20	1	12	1	500				2	20	1	–	SPARE
LIGHTS	20	1	12	3		50			4	–	–	–	SPACE ONLY
TVM	20	1	12	5	1500				6	–	–	–	SPACE ONLY
NEXT BUS SIGN	20	1	12	7		600			8	–	–	–	SPACE ONLY
					2000	650	0	0					
					2000	650	TOTAL AMPS/PHASE						
					17	5							

CONNECTED LOAD TOTAL 2650 W

EQUIP RATING 10,000 AMPS RMS SYM.

PHOTOCELL CONTROLLED–TORK MODEL 2101

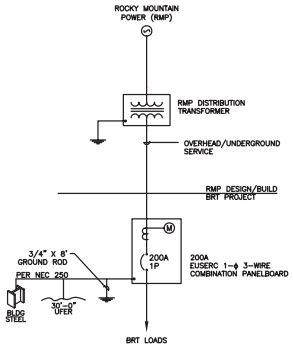

1 ONE–LINE DIAGRAM
NO SCALE

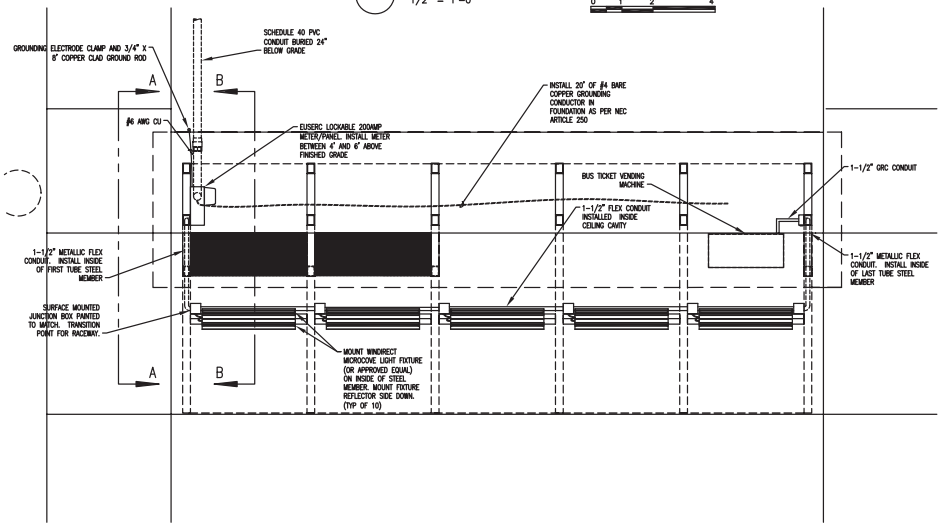

PLAN VIEW
UNDERGROUND SERVICE
1/2" = 1'–0'

REV	DATE	Description
	–	PRELIMINARY – NOT FOR REVIEW/CONSTRUCTION

BNA CONSULTING
635 South State Street
Salt Lake City, Utah 84111
P: 801.532.2196
F: 801.532.2305
www.bnaconsulting.com

© 2007 BNACONSULTING

RES Consulting, LLC

BHW Engineers, LLC

Submitted By: _____

UTA UTAH TRANSIT AUTHORITY

Approved By: _____

Designed By:
Drawn By:
Checked By:
Approved By:

3500 SOUTH BRT PROJECT

Scale:
CADD Filename:
Submittal Date –
UTA Contract No.: –
Drawing No.: E01
Sheet No.:

By: calama, Jun 07, 2007 – 12:58pm
I:\BRT PROJECTS\3500 South\3500 South drawings\Bus Stationing\WWV\First Station Plans\CADD\1094-E01.dwg

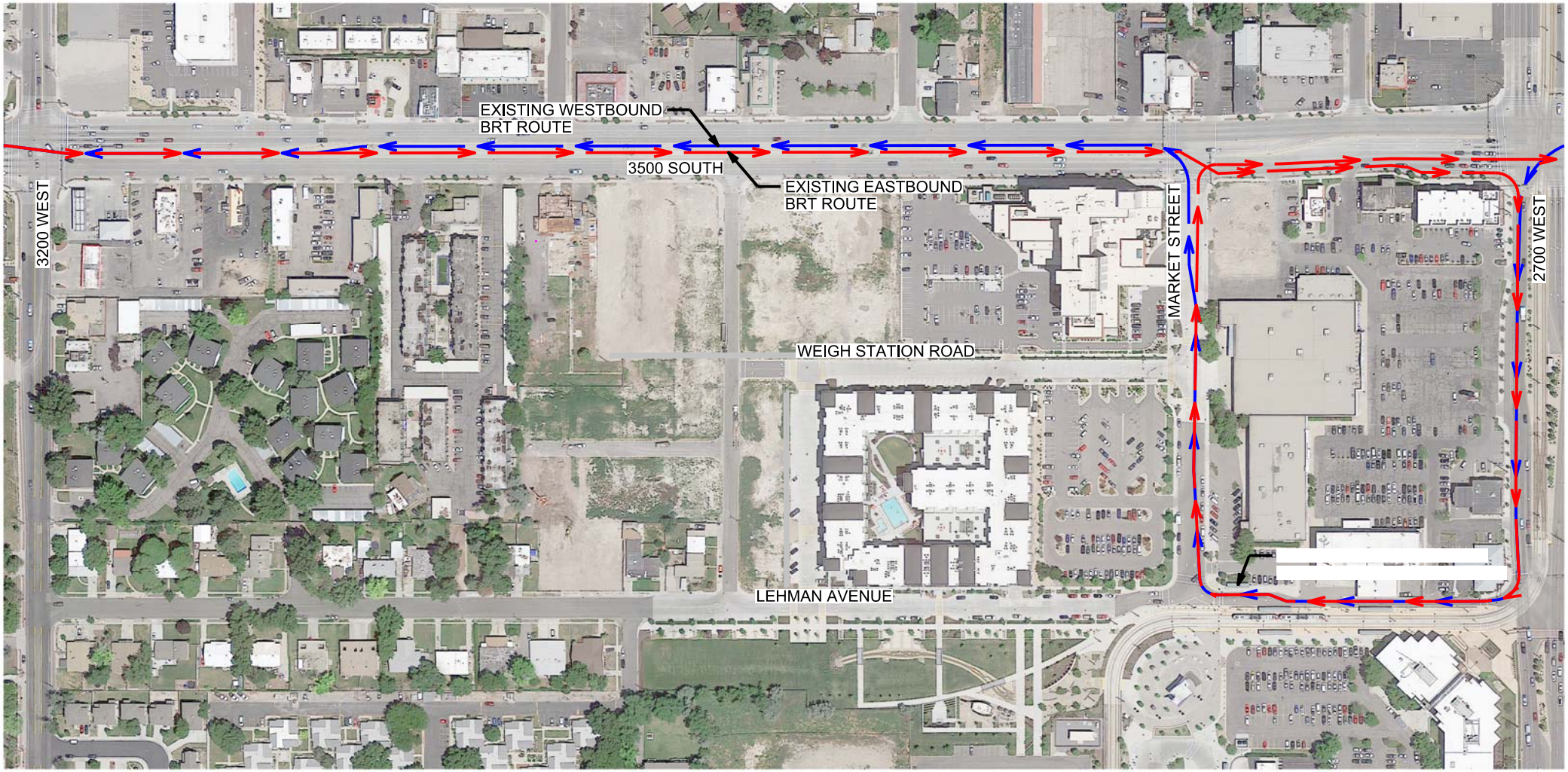

'EXHIBIT C'
EXISTING BUS RAPID TRANSIT ROUTE
IN FAIRBOURNE STATION AREA

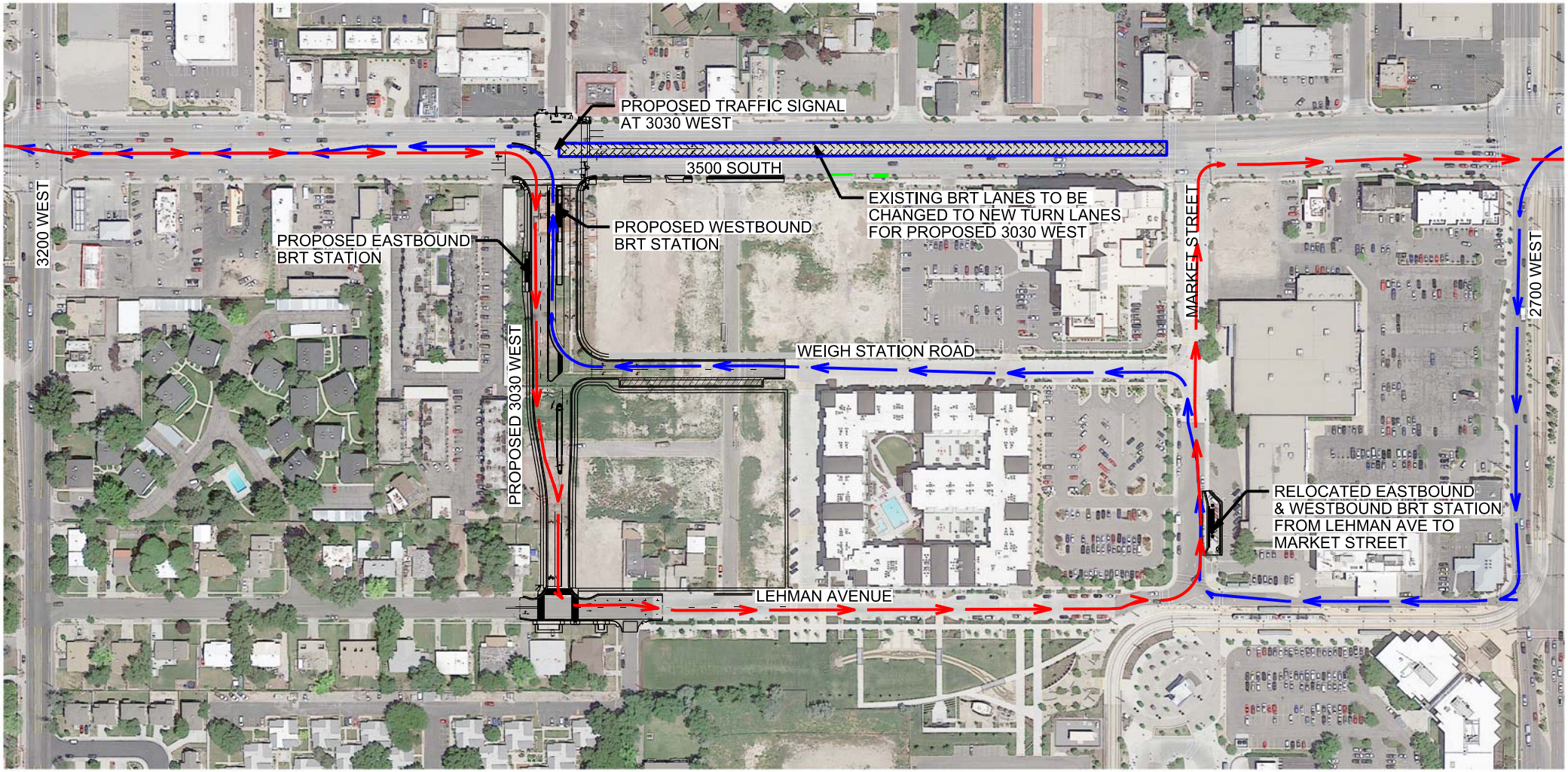

'EXHIBIT D'
PROPOSED BUS RAPID TRANSIT ROUTE
THROUGH FAIRBOURNE STATION

Item: _____
Fiscal Impact: $ 36,000,000
Funding Source: General Fund/Operating Revenues
Account #: _____

Budget Opening Required: X

ISSUE:

A RESOLUTION OF THE CITY COUNCIL OF WEST VALLEY CITY, UTAH AUTHORIZING AND APPROVING THE EXECUTION AND DELIVERY OF A MASTER LEASE AGREEMENT BY AND BETWEEN THE CITY AND THE MUNICIPAL BUILDING AUTHORITY OF WEST VALLEY CITY, UTAH (THE "AUTHORITY"), AND A GROUND LEASE AGREEMENT; AUTHORIZING THE ISSUANCE AND SALE BY THE AUTHORITY OF ITS LEASE REVENUE AND REFUNDING BONDS, SERIES 2016, IN THE AGGREGATE PRINCIPAL AMOUNT OF NOT MORE THAN $36,000,000; AUTHORIZING AND APPROVING THE EXECUTION AND DELIVERY BY THE AUTHORITY OF A GENERAL INDENTURE OF TRUST AND A FIRST SUPPLEMENTAL INDENTURE OF TRUST, BOND PURCHASE AGREEMENT, CERTAIN SECURITY DOCUMENTS, AN OFFICIAL STATEMENT, AND OTHER DOCUMENTS REQUIRED IN CONNECTION THEREWITH; AUTHORIZING THE TAKING OF ALL OTHER ACTIONS NECESSARY TO THE CONSUMMATION OF THE TRANSACTION CONTEMPLATED BY THIS RESOLUTION; AND RELATED MATTERS.

BACKGROUND:

An economic analysis of the outstanding 2006A and 2006B bonds has identified significant savings that can be realized by refunding the outstanding balance. These bonds were originally issued to finance construction of the Maverik Center, Hale Centre Theatre and Fire Station #75. In addition to the economic savings realized by this refunding a new fire station will be financed to replace an outdated facility(#72). Additional bond funds will be used to remodel and reconfigure an existing fire station(#71) to accommodate increased needs for space and equipment.

RECOMMENDATION:

Approval of resolution

SUBMITTED BY:

Jim Welch, Finance Director

Ballard Spahr
Draft of 4/27/16

West Valley City, Utah

May 10, 2016

The City Council (the "Council") of West Valley City (the "City"), met in regular session in West Valley City, Utah, on May 10, 2016, at 6:30 p.m., with the following Councilmembers being present:

Ron Bigelow	Mayor
Karen Lang	Councilmember
Don Christensen	Councilmember
Tom Huynh	Councilmember
Lars Nordfelt	Councilmember
Steve Buhler	Councilmember
Steve Vincent	Councilmember

Also present:

Wayne Pyle	City Manager
Jim Welch	City Finance Director
J. Eric Bunderson	City Attorney
Nichole Camac	City Recorder

Absent:

After the meeting had been duly called to order and after other matters not pertinent to this Resolution had been discussed, a Certificate of Compliance with Open Meeting Law with respect to this May 10, 2016 meeting was presented to the Council, a copy of which is attached hereto as Exhibit A.

The following resolution was then introduced in writing, was fully discussed, and pursuant to motion duly made by Councilmember _____and seconded by Councilmember _____, adopted by the following vote:

Those voting AYE:

Those voting NAY:

The resolution was then signed by the Mayor. The resolution is as follows:

RESOLUTION NO. _____

A RESOLUTION OF THE CITY COUNCIL OF WEST VALLEY CITY, UTAH AUTHORIZING AND APPROVING THE EXECUTION AND DELIVERY OF A MASTER LEASE AGREEMENT BY AND BETWEEN THE CITY AND THE MUNICIPAL BUILDING AUTHORITY OF WEST VALLEY CITY, UTAH (THE "AUTHORITY"), AND A GROUND LEASE AGREEMENT; AUTHORIZING THE ISSUANCE AND SALE BY THE AUTHORITY OF ITS LEASE REVENUE AND REFUNDING BONDS, SERIES 2016, IN THE AGGREGATE PRINCIPAL AMOUNT OF NOT MORE THAN $36,000,000; AUTHORIZING AND APPROVING THE EXECUTION AND DELIVERY BY THE AUTHORITY OF A GENERAL INDENTURE OF TRUST AND A FIRST SUPPLEMENTAL INDENTURE OF TRUST, BOND PURCHASE AGREEMENT, CERTAIN SECURITY DOCUMENTS, AN OFFICIAL STATEMENT, AND OTHER DOCUMENTS REQUIRED IN CONNECTION THEREWITH; AUTHORIZING THE TAKING OF ALL OTHER ACTIONS NECESSARY TO THE CONSUMMATION OF THE TRANSACTION CONTEMPLATED BY THIS RESOLUTION; AND RELATED MATTERS.

WHEREAS, the City Council (the "Council") of West Valley City, Utah (the "City") has previously authorized and directed the creation of the Municipal Building Authority of West Valley City, Utah (the "Authority"); and

WHEREAS, pursuant to the direction of the City, the Authority has been duly and regularly created, established and is organized and existing as a nonprofit corporation under and by virtue of the provisions of the Constitution and laws of the State of Utah, including, in particular, the provisions of the Local Building Authority Act, Title 17D, Chapter 2, Utah Code Annotated 1953, as amended (the "Building Authority Act"); and

WHEREAS, under the Articles of Incorporation of the Authority (the "Articles"), the objects and purposes for which the Authority has been founded and incorporated are to construct, acquire, improve or extend one or more projects and to finance their costs on behalf of the Authority in accordance with the procedures and subject to the limitations of the Building Authority Act in order to accomplish the public purpose for which the Authority exists; and

WHEREAS, pursuant to the provisions of the Building Authority Act, the Local Government Bonding Act, Title 11, Chapter 14, Utah Code Annotated 1953, as amended and the Utah Refunding Bond Act, Title 11, Chapter 27, Utah Code Annotated 1953, as amended (collectively, the "Act"), the Authority has authority to issue its lease revenue and refunding bonds for the purpose of financing and refinancing certain improvements for and on behalf of the Authority; and

WHEREAS, under the direction of the City, the Governing Board of the Authority (the "Governing Board") has the authority to issue the Authority's Lease Revenue and Refunding Bonds, Series 2016 (the "Series 2016 Bonds") (to be issued in one or more series and with such other series or title designation(s) as may be determined by the Authority) in the aggregate principal amount of not to exceed $36,000,000 to (a) finance the acquisition and construction of a new fire station and the remodeling of an existing fire station and related improvements (collectively, the "Fire Station Projects"), (b) refinance the Maverik Center (the "Maverik Center Project" and together with the Fire Station Projects, the "2016 Project"), by refunding a portion of the Authority's outstanding lease revenue bonds (the "Refunded Bonds"), (b) fund any required deposit to a debt service reserve fund, and (c) pay costs associated with the issuance of the Series 2016 Bonds; and

WHEREAS, the Series 2016 Bonds are to be issued pursuant to a General Indenture of Trust (the "General Indenture"), a First Supplemental Indenture of Trust (the "First Supplemental Indenture" and together with the General Indenture, the "Indenture"), substantially in the forms presented to the Council at this meeting and each of which is attached hereto as Exhibit B; and

WHEREAS, the City is the owner of fee simple title to the site on which [each of] the 2016 Project[s] [is/are] to be located and the City desires to lease such property to the Authority pursuant to the terms and provisions of one or more Ground Lease Agreements (the "Ground Leases"), in substantially the form presented to this meeting and attached hereto as Exhibit C and herein authorized and approved; and

WHEREAS, the 2016 Project is to be leased to the City, on an annually renewable basis, by the Authority pursuant to the terms and provisions of the Master Lease Agreement, by and between the Authority and the City (the "Master Lease") in substantially the form presented to the Council at this meeting and attached hereto as Exhibit D; and

WHEREAS, to further secure its payment obligations under the Indenture, the Authority proposes to grant a lien on and security interest in the 2016 Project pursuant to one or more of the following: (i) a [Leasehold] Deed of Trust, Assignment of Rents and Security Agreement and (ii) an Assignment of Ground Lease in substantially the forms presented to this meeting and attached hereto as Exhibit E (collectively the "Security Documents"); and

WHEREAS, the Authority by its Resolution dated the date hereof (the "Authority Resolution") has or is expected to authorize, approve and direct the execution of the Indenture, one or more Master Leases, Security Agreements, and Ground Lease and to authorize the issuance of the Series 2016 Bonds, the financing of the 2016 Project and the refunding of the Refunded Bonds; and

WHEREAS, there has been presented to the Council at this meeting a form of a Bond Purchase Agreement (the "Bond Purchase Agreement") to be entered into among

the Authority, the City and the underwriter selected by the Authority for the Series 2016 Bonds (the "Underwriter"), in substantially the form attached hereto as Exhibit F; and

WHEREAS, in connection with the issuance of the Series 2016 Bonds, the City desires to authorize the use and distribution of a Preliminary Official Statement (the "Preliminary Official Statement") in substantially the form attached hereto as Exhibit G, and to approve a final Official Statement (the "Official Statement") in substantially the form as the Preliminary Official Statement, and other documents relating thereto; and

WHEREAS, the Authority may not exercise any of its powers without prior authorization by the City, and therefore it is necessary that the City authorize certain actions by the Authority in connection with the transactions contemplated hereby in connection with the issuance of the Series 2016 Bonds; and

WHEREAS, the City desires to improve and promote the local health and general welfare of the citizens of the City by entering into the documents and taking the actions described above; and

WHEREAS, the City desires to approve and direct the execution of the Ground Lease[s], the Bond Purchase Agreement, and the Master Lease by the City and to authorize the issuance of the Series 2016 Bonds and the financing of the Fire Station Projects and the refinancing of the Maverik Center Project by the Authority and to further authorize the execution of the Ground Lease[s], the Master Lease, the General Indenture, the First Supplemental Indenture, the Bond Purchase Agreement, the Security Documents, the Official Statement, and certain other acts to be taken by the Authority in connection therewith;

NOW, THEREFORE, BE IT RESOLVED BY THE CITY COUNCIL OF WEST VALLEY CITY, UTAH AS FOLLOWS:

Section 1. All terms defined in the recitals hereto shall have the same meaning when used herein. All actions heretofore taken (not inconsistent with the provisions of this Resolution) by the City and by the officers of the Authority directed toward the issuance of the Series 2016 Bonds and the financing or refinancing, as appropriate, of the 2016 Project are hereby ratified, approved and confirmed.

Section 2. The City hereby finds and determines, pursuant to the Constitution and laws of the State of Utah, that the leasing of the 2016 Project under the terms and provisions and for the purposes set forth in the Master Lease and the other documents, instruments and conveyances hereinafter approved and authorized, is necessary, convenient and in furtherance of the governmental and proprietary purposes of the City and is in the best interest of the citizens of the City, and the City hereby authorizes, approves and directs the issuance and sale of the Series 2016 Bonds by the Authority in accordance with the provisions of the Indenture and the leasing of the 2016 Project in the manner provided in the Master Lease and the Ground Lease[s].

Section 3. The Ground Lease[s], Master Lease, Indenture, Security Documents and Bond Purchase Agreement, in substantially the respective forms

presented to this meeting and attached hereto as exhibits, are in all respects approved, authorized, and confirmed, and the Mayor or the Mayor pro tem, in the absence of the Mayor, is authorized to approve the final terms thereof and to execute and deliver the Ground Lease[s], the Master Lease and the Bond Purchase Agreement in the forms and with substantially the same content as attached hereto for and on behalf of the City with final terms as may be established for the Series 2016 Bonds by the Authority and with such alterations, changes or additions as may be necessary or as may be authorized herein. When authorized by the Governing Board of the Authority, the City hereby approves and authorizes the execution and delivery of the Bond Purchase Agreement, the Master Lease, the General Indenture, the First Supplemental Indenture, the Security Documents, the Ground Lease[s], and the Official Statement by the Authority in substantially the forms presented to this meeting and attached hereto as exhibits for and on behalf of the Authority.

Section 4. The Council hereby authorizes the financing of the 2016 Project and the delegation by the Authority, to certain officers of the Authority, the ability to set the final terms of the Series 2016 Bonds within the parameters established by the Authority in the Authority Resolution.

Section 5. Should the Authority determine to have the Series 2016 Bonds underwritten, the Council hereby authorizes the utilization of the Preliminary Official Statement, in the form attached hereto as Exhibit G, in the marketing of the Series 2016 Bonds and hereby approves the Official Statement in substantially the same form as the Preliminary Official Statement.

Section 6. For the purpose of providing funds to (a) finance or refinance, as appropriate, the 2016 Project, (b) fund any required reserves, and (c) pay costs associated with the issuance of the Series 2016 Bonds and for such other purposes as may be authorized under the Indenture, the Authority shall issue the Series 2016 Bonds which shall be designated the "Local Building Authority of the West Valley City, Utah Lease Revenue and Refunding Bonds, Series 2016" (to be issued in one or more series and with such other series or title designation(s) as may be determined by the Authority). The Series 2016 Bonds shall be dated, shall bear interest, and shall mature as set forth in the First Supplemental Indenture.

Section 7. The Authority is authorized to issue and sell the Series 2016 Bonds to the Underwriter thereof pursuant to the terms of the Bond Purchase Agreement in the aggregate principal amount of not to exceed $36,000,000 and at the purchase price set forth therein. The Series 2016 Bonds shall be dated as of their date of delivery, shall bear interest, and mature as set forth in the First Supplemental Indenture.

Section 8. The form, terms, and provisions of the Series 2016 Bonds and the provisions for the signatures, authentication, payment, registration, transfer, exchange, redemption, and number shall be as set forth in the Indenture. The Series 2016 Bonds shall mature prior to the expiration of the estimated useful life of the 2016 Project. The Chair/President of the Authority, including any authorized official acting in the Chair/President's place, is hereby authorized to execute the Series 2016 Bonds, to place

thereon the seal of the Authority and to deliver the Series 2016 Bonds to the Underwriter. The Secretary-Treasurer of the Authority is authorized to attest to the signature of the Chair/President and affix the seal of the Authority to the Series 2016 Bonds and to authenticate the Series 2016 Bonds. The signatures of the Chair/President and of the Secretary-Treasurer may be by facsimile or manual execution.

Section 9. The appropriate officers of the City and the Authority are authorized to take all actions necessary or reasonably required to carry out, give effect to and consummate the transactions contemplated hereby and are authorized to take all actions necessary in conformity with the Act and the Articles to finance or refinance, as appropriate, the 2016 Project, to acquire and construct the Fire Station Projects and to lease the 2016 Project pursuant to the Master Lease, including, without limitation, the execution and delivery of any closing and other documents required to be delivered in connection with the Indenture and the sale and delivery of the Series 2016 Bonds.

Section 10. Upon their issuance, the Series 2016 Bonds will constitute special limited obligations of the Authority payable solely from and to the extent of the sources set forth in the Series 2016 Bonds, the Indenture and the Security Documents. No provision of this Resolution, the Master Lease, the Ground Lease[s], the Indenture, the Series 2016 Bonds, the Bond Purchase Agreement, the Security Documents, the Official Statement, nor any other instrument authorized hereby, shall be construed as creating a general obligation of the Authority or of creating a general obligation of the City, the State of Utah or any political subdivision of the State of Utah, nor as incurring or creating a charge upon the general credit of the City or against its taxing powers. The City shall not be obligated to pay out of its funds, revenues, or accounts, or to make any payment in respect of the Series 2016 Bonds, except in connection with the payment of Base Rentals, Additional Rentals, and Purchase Option Price pursuant to the Master Lease (as those terms are defined in the Master Lease), which are subject to annual appropriation by the City in accordance with the provisions of the Master Lease. The Authority has no taxing power.

Section 11. The Mayor is hereby authorized to make any alterations, changes or additions in the Master Lease, the Ground Lease[s], the Bond Purchase Agreement, and the Official Statement herein approved and authorized necessary to correct errors or omissions therein, to remove ambiguities therefrom, or to conform the same to other provisions of such instruments, to the provisions of this Resolution, or any resolution adopted by the City or the Authority, to the agreements with the Underwriter or the provisions of the laws of the State of Utah or the United States, the approval of all such alterations, changes, or additions to be conclusively established by the execution thereof.

Section 12. The appropriate officials of the Authority are authorized to make any alterations, changes, or additions in the Master Lease, the Ground Lease[s], the General Indenture, the First Supplemental Indenture, the Bond Purchase Agreement, the Security Documents, and the Official Statement herein authorized and approved which may be necessary to correct errors or omissions therein, to remove ambiguities therefrom, to conform the same to other provisions of said instruments, to the provisions of this Resolution, or any resolution adopted by the City or the Authority, to the agreements with

the Underwriter, or the provisions of the laws of the State of Utah or the United States, approval of all such alterations, changes, or additions to be conclusively established by the execution thereof.

Section 13. If any provisions of this resolution (including the exhibits attached hereto) should be held invalid, the invalidity of such provisions shall not affect any of the other provisions of this resolution or the exhibits.

Section 14. The City Recorder is hereby authorized to attest to all signatures and acts of any proper official of the City, and, as necessary, to place the seal of the City on the Master Lease, the Bond Purchase Agreement, the Ground Lease[s] and the Official Statement. The Mayor and other proper officials of the City and each of them, are hereby authorized to execute and deliver for and on behalf of the City any and all additional certificates, documents, and other papers and to perform all other acts that they may deem necessary or appropriate in order to implement and carry out the matters herein authorized. Any action authorized to be taken by the Mayor of the City may, in his/her absence, be taken by the Mayor pro tem.

Section 15. The Secretary-Treasurer or other authorized officer of the Authority is hereby authorized to attest to all signatures and acts of any proper official of the Authority, and, as necessary, to place the seal of the Authority on the Master Lease, the Ground Lease[s], the Indenture, the Security Documents, the Bond Purchase Agreement, the Official Statement, and any other documents authorized, necessary or proper pursuant to this Resolution or any Resolution of the Authority. The appropriate officials of the Authority, and each of them, are hereby authorized to execute and deliver for and on behalf of the Authority any or all additional certificates, documents, and other papers to perform all other acts they may deem necessary or appropriate in order to implement and carry out the matters authorized in this resolution. Any action authorized to be taken by the Chair/President may, in his/her absence, be taken by the Vice-Chair of the Authority.

Section 16. The appropriate officers of the City are authorized to take all action necessary or reasonably required to carry out, give effect to and consummate the transactions contemplated hereby.

Section 17. If any provisions of this Resolution (including the exhibits attached hereto) should be held invalid, the invalidity of such provisions shall not affect any of the other provisions of this Resolution or the exhibits.

Section 18. This Resolution shall become effective immediately upon adoption by the City.

Section 19. All bylaws, orders and resolutions of the City or parts thereof, inconsistent herewith, are hereby repealed to the extent only of such inconsistency. This repealer shall not be construed as revising any bylaw, order, resolution, or ordinance or part thereof.

PASSED AND APPROVED BY THE CITY COUNCIL OF WEST VALLEY CITY, UTAH THIS MAY 10, 2016.

(SEAL)

By:_____
Mayor

ATTEST:

By:_____
City Recorder

STATE OF UTAH)
) ss.
COUNTY OF SALT LAKE)

I, Nichole Camac, the undersigned duly qualified and acting City Recorder of West Valley City, Utah (the "City"), do hereby certify:

The foregoing pages are a true, perfect and complete copy of a resolution duly adopted by the City Council of the City (the "Council") during proceedings of the Council, had and taken at a lawful regular meeting of said Council held at the City offices in West Valley City, Utah on May 10, 2016, commencing at the hour of 6:30 p.m., as recorded in the regular official book of the proceedings of the City kept in my office, and said proceedings were duly had and taken as therein shown, and the meeting therein shown was duly held, and the persons therein were present at said meeting as therein shown.

All members of said City Council were duly notified of said meeting, pursuant to law.

IN WITNESS WHEREOF, I have hereunto set my hand and affixed the seal of said City this May 10, 2016.

By: _____
City Recorder

(SEAL)

EXHIBIT A

CERTIFICATE OF COMPLIANCE WITH OPEN MEETING LAW

I, Nichole Camac, the undersigned City Recorder of West Valley City, Utah (the "City"), do hereby certify, according to the records of the City in my official possession, and upon my own knowledge and belief, that in accordance with the requirements of Section 52-4-202, Utah Code Annotated 1953, as amended, I gave not less than twenty-four (24) hours public notice of the agenda, date, time, and place of the May 10, 2016, public meeting held by the City as follows:

(a) By causing a Notice, in the form attached hereto as Schedule 1, to be posted at the City's principal offices on May ___, 2016, at least twenty-four (24) hours prior to the convening of the meeting, said Notice having continuously remained so posted and available for public inspection until the completion of the meeting;

(b) By causing a copy of such Notice, in the form attached hereto as Schedule 1, to be delivered to The Salt Lake Tribune and The Deseret News on May ___, 2016, at least twenty-four (24) hours prior to the convening of the meeting; and

(c) By causing a copy of such Notice to be published on the Utah Public Notice Website (http://pmn.utah.gov) at least twenty-four (24) hours prior to the convening of the meeting.

In addition, Notice of the 2016 Annual Meeting Schedule for the City (attached hereto as Schedule 2) was given specifying the date, time and place of the regular meetings of the City to be held during the year, by causing said Notice to be (i) posted on _____ at the principal office of the City, (ii) provided to at least one newspaper of general circulation within the City on _____ and (iii) published on the Utah Public Notice Website (http://pmn.utah.gov) during the current calendar year.

IN WITNESS WHEREOF, I have hereunto subscribed my official signature this May 10, 2016.

(SEAL)

By:_____
City Recorder

SCHEDULE 1

NOTICE OF MEETING

SCHEDULE 2

ANNUAL MEETING NOTICE

EXHIBIT B

GENERAL INDENTURE AND FIRST SUPPLEMENTAL INDENTURE

(See Transcript Document Nos. __ and __)

EXHIBIT C

GROUND LEASE AGREEMENT

(See Transcript Document No. __)

EXHIBIT D

MASTER LEASE AGREEMENT

(See Transcript Document No. __)

EXHIBIT E

SECURITY DOCUMENTS

(See Transcript Document No. __ &__)

EXHIBIT F

BOND PURCHASE AGREEMENT

(See Transcript Document No __)

EXHIBIT G

PRELIMINARY OFFICIAL STATEMENT

(See Transcript Document No. __)

WHEN RECORDED, RETURN TO:

Bradley D. Patterson
Ballard Spahr LLP
201 South Main Street, Suite 800
Salt Lake City, Utah 84111

ASSIGNMENT OF GROUND LEASE AGREEMENT

THIS ASSIGNMENT, made and entered into this [June 1], 2016, by the MUNICIPAL BUILDING AUTHORITY OF WEST VALLEY CITY, UTAH a Utah nonprofit corporation, whose address is 3600 Constitution Blvd., West Valley City, Utah 84119 (the "Assignor"), to and in favor of _____, a national banking association, having its principal office in Salt Lake City, Utah ("Trustee"), as Trustee under a General Indenture of Trust dated as of [June 1], 2016, by and between the Assignor and the Trustee (the "General Indenture"), as further supplemented by a First Supplemental Indenture of Trust, dated as of [June 1], 2016 (the "First Supplemental Indenture," and together with the General Indenture, the "Indenture").

W I T N E S S E T H:

FOR VALUE RECEIVED, Assignor hereby grants, transfers and assigns to Trustee all the right, title and interest of Assignor in and to that certain Ground Lease Agreement (the "Ground Lease Agreement") dated as of [June 1], 2016, between Assignor, as lessee, and West Valley City, Utah, as lessor, which Ground Lease Agreement demises the real property located in Salt Lake County, State of Utah, more particularly described in Exhibit A attached hereto and by this reference made a part hereof.

FOR THE PURPOSE OF SECURING:

(A) The payment and performance of each and every obligation of Assignor contained in the Indenture and in Assignor's Lease Revenue and Refunding Bonds, Series 2016, and any Additional Bonds or Refunding Bonds (as defined in the Indenture) (collectively, the "Bonds"); and

(B) The payment of all sums expended or advanced by Trustee pursuant to the terms of this Assignment and the Indenture, or any instrument further evidencing or securing any obligation secured hereby, together with interest thereon as therein provided.

TO PROTECT THE SECURITY OF THIS ASSIGNMENT, ASSIGNOR AGREES:

(1) To faithfully abide by, perform and discharge every obligation, covenant and agreement of the Ground Lease Agreement to be performed by the lessee thereunder;

at the sole cost and expense of Assignor, to enforce or secure the performance of every obligation, covenant, condition and agreement of the Ground Lease Agreement to be performed by the lessor thereunder; not to modify, extend or in any way alter the terms of the Ground Lease Agreement without the prior written consent of Trustee. Assignor also agrees not to waive or in any manner release or discharge the lessor thereunder of or from the obligations, covenants, conditions and agreements to be performed by lessor.

(2) Not to declare the Ground Lease Agreement terminated nor to exercise any other right available to it upon breach by the lessor, without the prior written consent of Trustee.

(3) At Assignor's sole cost and expense, to appear in and defend any action or proceedings arising under, growing out of or in any manner connected with the Ground Lease Agreement or the obligations, duties or liabilities of lessor and lessee thereunder.

(4) That should the Assignor fail to make any payment or to do any act as herein provided, then Trustee, but without obligation so to do and without notice to or demand on Assignor, and without releasing Assignor from any obligation hereof, may make or do the same in such manner and to such extent as Trustee may deem necessary to protect the security hereof, including specifically, without limiting its general powers, the right to appear in and defend any action or proceeding purporting to affect the security hereof or the rights or powers of Trustee, and also the right to perform and discharge each and every obligation, covenant and agreement of Assignor contained in the Ground Lease Agreement.

IT IS MUTUALLY AGREED THAT:

(1) Upon or any time after default by Assignor in the payment of any indebtedness secured hereby or in the performance of any obligation, covenant or agreement herein or in said Indenture, Trustee may declare all sums secured hereby immediately due and payable, and may, at its option, without notice, either in person or by agent with or without bringing any action or proceedings, or by a receiver to be appointed by a court, enter upon, take possession of, manage and operate said demised premises or any part thereof make, cancel, enforce or modify leases; do any acts which Trustee deems proper to protect the security hereof, and either with or without taking possession of said property, in its own name sue for or otherwise collect and receive such rents, issues and profits, including those past due and unpaid, and apply the same, less costs and expenses of operation and collection including reasonable attorneys' fees, upon any indebtedness secured hereby, and in the order set forth in the Indenture. The entering upon and taking possession of said property, the collection of such rents, issues, and profits, and the application thereof as aforesaid shall not cure or waive any default or waive, modify, or effect notice of default under any instrument secured hereby or invalidate any act done pursuant to such notice. The remedies of the Trustee herein shall be subject to the limitations set forth in Article IX of the General Indenture.

Any default by Assignor in the performance of any obligation, covenant or agreement herein contained and the acceleration of the indebtedness secured hereby shall constitute and be deemed to be a default under the terms of the Indenture.

(2) Trustee shall not be obligated to perform or discharge, nor does it hereby undertake to perform or discharge, any obligation, duty or liability under the Ground Lease Agreement, or under or by reason of this Assignment.

(3) Until the indebtedness secured hereby shall have been paid in full, Assignor covenants and agrees to transfer and assign to Trustee any and all subleases upon all or any part of said demised premises upon the same or substantially the same terms and conditions as are herein contained, and to make, execute and deliver to Trustee, upon demand, any and all instruments that may be necessary therefor.

(4) Upon the payment in full of all indebtedness secured hereby, this Assignment shall become and be void and of no effect.

(5) This Assignment applies to, inures to the benefit of, and binds the parties hereto, their successors, and assigns.

(6) All notices, demands, or documents of any kind which Trustee may be required or may desire to serve upon Assignor hereunder, may be served by delivering the same to Assignor personally or by leaving a copy of such notice, demand or document addressed to Assignor at the address set forth in the beginning of this Assignment, or by depositing a copy of such notice, demand or document in the United States mail, postage prepaid, and addressed to Assignor at Assignor's address.

(7) Notwithstanding anything to the contrary contained herein, no deficiency judgment upon any foreclosure may be entered against the Assignor, West Valley City, Utah, the State of Utah or any of its political subdivisions.

EXECUTED as of the day and year first above written.

MUNICIPAL BUILDING AUTHORITY
OF WEST VALLEY CITY, UTAH

(SEAL)

By:_____
Chair/President

ATTEST:

By:_____
Secretary-Treasurer

_____

By:_____

Title:_____

CONSENT TO ASSIGNMENT

West Valley City, Utah, as lessor under the Ground Lease Agreement hereby consents to the assignment by the Municipal Building Authority of West Valley City, Utah, of its interest in the Ground Lease Agreement to the within mentioned Trustee to secure the within described Indenture and Bonds.

Executed as of the day and year first above written.

WEST VALLEY CITY, UTAH

By:_____
Mayor

ATTEST:

By:_____
City Recorder

(SEAL)

STATE OF UTAH)
: ss.
COUNTY OF SALT LAKE)

On _____, 2016, the foregoing instrument was acknowledged before me by _____ and _____, the Chair/President and Secretary-Treasurer, respectively, of the Municipal Building Authority of West Valley City, Utah.

_____
Notary Public

(SEAL)

STATE OF UTAH)
: ss.
COUNTY OF SALT LAKE)

On _____, 2016, the foregoing instrument was acknowledged before me by _____, a Vice President of _____.

_____
Notary Public

(SEAL)

EXHIBIT A

All real property located or the land located in Salt Lake County, Utah, described as follows:

BOND PURCHASE CONTRACT

$_____
Municipal Building Authority of
West Valley City, Utah
Lease Revenue and Refunding Bonds,
Series 2016

[June __], 2016

Municipal Building Authority of West Valley City, Utah
3600 Constitution Boulevard
West Valley City, Utah 84119

West Valley City
3600 Constitution Boulevard
West Valley City, Utah 84119

The undersigned, _____, as underwriter (the "Underwriter"), and not as fiduciary or agent for you, offers to enter into this Bond Purchase Contract (the "Purchase Contract") with the Municipal Building Authority of West Valley City, Utah (the "Issuer") and West Valley City, Utah (the "City") which, upon the acceptance by the Issuer and the City of this offer, shall be in full force and effect in accordance with its terms and shall be binding upon each of you and the Underwriter.

This offer is made subject to your acceptance and approval on or before 11:59 p.m. Utah Time, on the date hereof. Terms not otherwise defined herein shall have the same meanings as are set forth in the hereinafter referred to Official Statement.

ARTICLE I

SALE, PURCHASE AND DELIVERY

Section 1.1. (a) On the basis of the representations, warranties and agreements contained herein and upon the terms and conditions herein set forth, the Underwriter hereby agrees to purchase, and the Issuer hereby agrees to sell to the Underwriter, all, but not less than all, of the Issuer's $_____ aggregate principal amount of Lease Revenue and Refunding Bonds, Series 2016 (the "Series 2016 Bonds"), at a purchase price of $_____ (representing the principal amount of the Series 2016 Bonds, [plus/less] a [net] reoffering [premium/discount] of $_____ and less an Underwriter's discount of $_____) plus accrued interest, if any, from their dated date to the Closing Date (as hereinafter defined). The Series 2016 Bonds will mature on the dates and in the amounts and bear interest at the rates per annum as set forth in Schedule A hereto. [Payment of principal of and interest on the Series 2016 Bonds when due is also to be secured by a municipal bond insurance policy (the "Bond Insurance Policy") to be issued by _____ (the "Insurer").]

(b) The Series 2016 Bonds shall be as described in the Official Statement dated [June __], 2016, of the Issuer relating to the Series 2016 Bonds (together with all appendices thereto, the "Official Statement"), shall be issued and secured under and pursuant to (i) the Local Government Bonding Act, Title 11, Chapter 14, Utah Code Annotated 1953, as amended, the Utah Refunding Bond Act, Title 11, Chapter 27, Utah Code Annotated 1953, as amended, and the Local Building Authority Act, Title 17D, Chapter 2, Utah Code Annotated 1953, as amended (the "Building Authority Act"), and (ii) a General Indenture of Trust dated as of [June 1], 2016 (the "General Indenture"), between the Issuer and _____, as trustee (the Trustee"), as supplemented by a First Supplemental Indenture of Trust dated as of [June 1], 2016 (the "First Supplemental Indenture," and together with the General Indenture, the "Indenture"), between the Issuer and the Trustee. The Series 2016 Bonds are secured under the Indenture and the Security Documents (as defined in the Indenture). The Series 2016 Bonds are authorized pursuant to the resolution of the Issuer adopted on May 10, 2016 (the "Resolution") by the Board of Trustees of the Issuer (the "Board") which provides for the issuance of the Series 2016 Bonds and approved pursuant to the resolution of the City (the "Approval Resolution") adopted by its City Council on May 10, 2016.

(c) The Series 2016 Bonds are being issued for the purpose of (a) financing the acquisition and construction of a new fire station and the remodeling of an existing fire station and, related improvements (the "Fire Station Projects"), (b) refinancing the Maverik Center (the "Maverik Center Project" and together with the Fire Station Projects, the "2016 Project"), by refunding the Issuer's outstanding lease revenue bonds relating to the Maverik Center Project (the "Refunded Bonds"), [(c) funding a deposit to a debt service reserve fund], and (d) paying costs associated with the issuance of the Series 2016 Bonds. [Pursuant to an Escrow Agreement dated as of [June 1], 2016 (the "Escrow Agreement") between the Issuer, the City and _____, as escrow agent (the "Escrow Agent"), certain moneys and governmental securities will be deposited into separate escrow accounts in an amount sufficient to pay the principal of, premium, if any, and accrued interest on the Refunded Bonds as the same become due whether pursuant to maturity or prior to redemption.] Pursuant to an annually renewable Master Lease Agreement dated as of [June 1], 2016 the "Lease"), the 2016 Project will be leased by the City from the Issuer in consideration of the payment of Rentals (as defined in the Lease).

(d) The Indenture, the Lease, the Security Documents, [the Escrow Agreement,] [the Maverik Center Ground Lease], and [the Fire Facilities Ground Leases] (as both terms are defined in the Official Statement), the Series 2016 Bonds, the Resolution, and the Continuing Disclosure Undertaking (defined below) and this Purchase Contract are sometimes referred to collectively herein as the "Transaction Documents."

(e) The Underwriter agrees to make an initial public offering of the Series 2016 Bonds at the offering prices or yields set forth on the inside front

cover page of the Official Statement. The Underwriter may, however, change such initial offering prices or yields as it may deem necessary in connection with the marketing of the Series 2016 Bonds and offer and sell the Series 2016 Bonds to certain dealers (including dealers depositing the Series 2016 Bonds into investment trusts) and others at prices lower than the initial offering prices or yields set forth in the Official Statement. The Underwriter also reserves the right (i) to engage in transactions that stabilize, maintain or otherwise affect the market prices of the Series 2016 Bonds and (ii) to discontinue such transactions, if commenced, at any time without prior notice.

Section 1.2. (a) By acceptance and approval of this Purchase Contract, the Issuer and the City hereby authorize the use of copies of the Official Statement. The Issuer and the City hereby agree to provide to the Underwriter within seven (7) business days of the date hereof sufficient copies of the Official Statement to enable the Underwriter to comply with the requirements of paragraph (b)(4) of Rule 15c2-12 under the Securities Exchange Act of 1934, as amended ("Rule 15c2-12"), and with the requirements of Rule G-32 of the Municipal Securities Rulemaking Board. The City has heretofore "deemed final" the Preliminary Official Statement for purposes of paragraph (b)(1) of Rule 15c2-12 and the Issuer and the City acknowledge and ratify the use by the Underwriter prior to the date hereof of the Preliminary Official Statement in connection with the public offering of the Series 2016 Bonds.

(b) In order to assist the Underwriter in complying with paragraph (b)(5) of Rule 15c2-12, the City will undertake, pursuant to a Continuing Disclosure Undertaking (the "Continuing Disclosure Undertaking"), to be dated as of the Closing Date to provide annual reports and notices of certain events. A form of the Continuing Disclosure Undertaking is set forth as Appendix [D] to the Preliminary Official Statement and will also be set forth as Appendix [D] to the Official Statement.

Section 1.3. At approximately [9:00 a.m.], Utah time, on [June __], 2016, or on such later date as shall be agreed upon in writing by the Issuer, the City, and the Underwriter, the Issuer and the City will cause the Series 2016 Bonds to be delivered to or for the account of the Underwriter in definitive form, duly executed and authenticated, at such place designated by the Underwriter and will deliver to the Underwriter the other documents herein mentioned at the offices of Ballard Spahr LLP, 201 South Main Street, Suite 800, Salt Lake City, Utah, or such other location as may be mutually agreed upon by the Issuer, the City, and the Underwriter. The closing date of [June __], 2016, is herein referred to as "Closing Date" with respect to the Series of Bonds. The Underwriter will accept such delivery and pay the purchase price of the Series 2016 Bonds as set forth in paragraph 1.1(a) hereof by wire transfer, payable in federal funds or other immediately available funds to the order of the Trustee (such delivery and payment are herein called the "Closing"). The Series 2016 Bonds shall be initially issued in the form of one fully registered Bond for each maturity of the Series 2016 Bonds, shall be registered in the name of Cede & Co., as nominee for The Depository Trust Company ("DTC"), and shall be made available to DTC or its agent for the account of the

Underwriter in New York, New York (or such other place designated by the Underwriter).

ARTICLE II

REPRESENTATIONS, WARRANTIES AND AGREEMENTS OF ISSUER

By its acceptance hereof, the Issuer represents and warrants to and covenants with the Underwriter that:

Section 2.1. The Issuer shall provide such information, access to its properties and appropriate records and other cooperation, as may be reasonably requested until 25 days after the "end of the underwriting period" (as defined in Rule 15c2-12) (which underwriting period the Issuer may assume to have ended on the Closing Date unless notified to the contrary by the Underwriter) as, in the opinion of the Underwriter, may be required in connection with the offering of the Series 2016 Bonds.

Section 2.2. The Issuer is a nonprofit corporation created by the City Council of the City pursuant to the Building Authority Act and the Utah Revised Nonprofit Corporation Act, Title 16, Chapter 6a, Utah Code Annotated 1953, as amended (the "Nonprofit Corporation Act"). The Issuer has full power and authority (a) to adopt the Resolution; (b) to execute, deliver and perform its obligations under each of the Transaction Documents to which it is a party; (c) to execute, issue, sell and deliver the Series 2016 Bonds to the Underwriter for the purposes contemplated by the Preliminary Official Statement and as provided herein; (d) to own the 2016 Projects, and to lease the 2016 Projects to the City pursuant to the Lease; and (e) to carry out and to consummate the transactions on its part contained in the Transaction Documents and the Official Statement, to pledge and assign to the Trustee the Trust Estate (as defined in the Indenture), and to create a security interest in the 2016 Projects to secure the payment of the Series 2016 Bonds and all Additional Bonds and Refunding Bonds pursuant to the Indenture.

Section 2.3. The Board of the Issuer has duly adopted the Resolution, has duly authorized and approved the execution and distribution of the Preliminary Official Statement and the Official Statement and has duly authorized and approved the execution and delivery of, and the performance by the Issuer of the obligations on its part contained in the Transaction Documents and the Purchase Contract.

Section 2.4. The adoption of the Resolution, the execution and delivery of the Transaction Documents, the compliance by the Issuer with the provisions of any or all of the foregoing documents, and the application of the proceeds of the Series 2016 Bonds for the purposes described in the Official Statement do not and will not conflict with or result in the material breach of any of the terms, conditions or provisions of, or constitute a default under, any existing law, court or administrative regulation, decree or order, agreement, indenture, mortgage, lease or instrument to which the Issuer is a party or by which the Issuer or any of its property is or may be bound.

Section 2.5. The Issuer has duly authorized all necessary action to be taken by it for the adoption of the Resolution; the issuance and sale of the Series 2016 Bonds by the Issuer upon the terms and conditions set forth herein, in the Official Statement, and the Transaction Documents; and the execution, delivery and receipt of the Transaction Documents, and any and all such agreements, certificates and documents as may be required to be executed, delivered and received by the Issuer in order to carry out, effectuate and consummate the transactions contemplated hereby and by the Official Statement, including but not limited to such certifications as may be necessary to establish and preserve the excludability from gross income for federal income tax purposes of interest on the Series 2016 Bonds.

Section 2.6. There is no action, suit, proceeding, inquiry or investigation, at law or in equity, before or by any court, public board or body, pending or threatened against the Issuer or others (a) affecting the existence of the Issuer or the titles of its officers to their respective offices; (b) seeking to prohibit, restrain or enjoin the sale, issuance or delivery of the Series 2016 Bonds or the revenues or assets of the Issuer mortgaged, appropriated, encumbered or pledged pursuant to the Indenture; (c) in any way contesting or affecting the validity or enforceability of the Series 2016 Bonds or any of the Transaction Documents or the transactions contemplated thereby; (d) contesting in any way the completeness or accuracy of the Preliminary Official Statement or the Official Statement; or (e) contesting the powers of the Issuer or any authority for the issuance of the Series 2016 Bonds or the execution and delivery of any of the Transaction Documents to which the Issuer is a party.

Section 2.7. When delivered to and paid by the Underwriter at the Closing in accordance with the provisions of this Purchase Contract, the Series 2016 Bonds will have been duly authorized, executed, issued and delivered and will constitute valid and binding special limited obligations of the Issuer in conformity with, and entitled to the benefit and security of the Indenture.

Section 2.8. The Issuer is not in breach of or in default under any material existing law, court or administrative regulation, decree or order, ordinance, resolution, agreement, indenture, mortgage, lease, sublease or other instrument to which the Issuer is a party or by which the Issuer or its property is bound; and the execution and delivery of the Series 2016 Bonds and the Transaction Documents to which the Issuer is a party, and this Purchase Contract, and compliance with the provisions thereof, will not conflict with or constitute a material breach or a default under any law, administrative regulation, judgment, decree, loan agreement, mortgage, indenture, deed of trust, note, resolution, agreement or other instrument to which the Issuer or its property is or may be bound.

Section 2.9. No event has occurred or is continuing which, with the passage of time or the giving of notice, or both, would constitute a default or an event of default under the Transaction Documents, or which could have a material adverse effect on the financial condition of the Issuer, receipt by the Issuer of the Base Rentals or the transactions contemplated by the Transaction Documents, or have a material adverse effect on the validity or enforceability in accordance with their respective terms of the Transaction Documents or this Purchase Contract or in any way adversely affect the

existence or any powers of the Issuer or the titles of its officers to their respective positions or the excludability from gross income for federal income tax purposes of interest on the Series 2016 Bonds.

Section 2.10. The information contained in the Preliminary Official Statement was, as of its date, and will be, as of the Closing Date, true and correct in all material respects. The Preliminary Official Statement does not contain, and the Official Statement, as of its date and as of the Closing Date, will not contain any untrue statement of a material fact, and the Preliminary Official Statement does not omit and the Official Statement, as of its date and as of the Closing Date, will not omit to state a material fact required to be stated therein or necessary to make the statements made therein, in the light of the circumstances under which they were made, not misleading; provided, however, that this representation and warranty shall not be deemed to cover or apply to (x) information provided to the Issuer in writing by the Underwriter and included on the cover page of the Preliminary Official Statement or the Official Statement regarding the principal amount, interest rates, maturities and initial public offering prices of the Series 2016 Bonds or (y) statements in the Preliminary Official Statement or the Official Statement under the captions ["THE SERIES 2016 BONDS—Book-Entry Only System," "UNDERWRITING," "APPENDIX A," "APPENDIX C" or "APPENDIX F."]

Section 2.11. The Issuer has full power and authority to receive and utilize the Base Rentals in accordance with the Indenture.

Section 2.12. The Issuer will not take or omit to take any action which will in any way cause the proceeds from the sale of the Series 2016 Bonds to be applied or result in such proceeds being applied in a manner inconsistent with the Transaction Documents.

Section 2.13. The Issuer hereby authorizes the use of the Official Statement, including all amendments and supplements thereto, by the Underwriter in connection with the public offering and sale of the Series 2016 Bonds and consents to the use by the Underwriter prior to the date hereof of the Preliminary Official Statement in connection with the public offering and sale of the Series 2016 Bonds.

Section 2.14. The Issuer agrees to reasonably cooperate with the Underwriter in any endeavor to qualify the Series 2016 Bonds for offering and sale under the securities or "Blue Sky" laws of such jurisdictions of the United States as the Underwriter may request; provided, however, that the Issuer shall not be required with respect to the offer or sale of the Series 2016 Bonds to file written consent to suit or to file written consent to service of process in any jurisdiction. The Issuer hereby consents to the use of the Official Statement by the Underwriter in obtaining such qualification.

Section 2.15. If between the date of this Purchase Contract and 25 days following the "end of the underwriting period", (which the Issuer can assume is the Closing Date unless otherwise notified in writing by the Underwriter) any event shall occur which might or would cause the Official Statement to contain any untrue statement of a material fact or to omit to state any material fact required to be stated therein or necessary to make the statements therein, in the light of the circumstance under which

they were made, not misleading, the Issuer shall notify the Underwriter and if, in the opinion of the Underwriter, such event requires the preparation and publication of a supplement or amendment to the Official Statement, the Issuer will supplement or amend the Official Statement in a form and in a manner approved by the Underwriter. If the Official Statement is amended or supplemented subsequent to the date hereof and prior to the Closing, the Underwriter may terminate this Purchase Contract by notification to the Issuer and the City at any time prior to the Closing if, in the reasonable judgment of the Underwriter, such amendment or supplement has or will have a material adverse effect on the marketability of the Series 2016 Bonds.

Section 2.16. The Issuer has duly adopted the Resolution and approved the execution of the Transaction Documents to which it is a party and, as of the Closing Date, each will be in full force and effect and, as of the Closing Date, neither the Resolution nor any of the Transaction Documents to which it is a party will have been amended, supplemented, rescinded, repealed or otherwise modified except with the approval of the Underwriter.

Section 2.17. When executed by the respective parties thereto, this Purchase Contract and the Transaction Documents will constitute legal, valid and binding obligations of the Issuer enforceable in accordance with their respective terms except that the rights and obligations under the Transaction Documents, and this Purchase Contract are subject to bankruptcy, insolvency, reorganization, moratorium, fraudulent conveyance and other similar laws affecting creditors' rights, to the application of equitable principles if equitable remedies are sought, to the exercise of judicial discretion in appropriate cases and to limitations on legal remedies against public agencies in the State of Utah.

Section 2.18. The Issuer has complied, and will at the Closing for the Series 2016 Bonds be in compliance in all respects, with the obligations on its part contained in the Transaction Documents and this Purchase Contract and any and all other agreements relating thereto.

Section 2.19. Each representation, warranty or agreement stated in any certificate signed by any officer of the Issuer and delivered to the Underwriter at or before the Closing for the Series 2016 Bonds shall constitute a representation, warranty, or agreement by the Issuer upon which the Underwriter shall be entitled to rely.

Section 2.20. The Issuer has not otherwise pledged or assigned or granted a security interest in the Trust Estate to the payment of any obligations of the Issuer.

ARTICLE III

REPRESENTATIONS, WARRANTIES AND AGREEMENTS OF THE CITY

In order to induce the Underwriter to enter into this Purchase Contract, with full realization and appreciation of the fact that the investment value of the Series 2016 Bonds and the ability of the Issuer to sell and the Underwriter to resell the Series 2016 Bonds

are dependent upon the credit standing of the City and in consideration of the foregoing and execution and delivery of this Purchase Contract, the City represents and warrants to and covenants with the Underwriter as follows:

Section 3.1. The City is and will be at the date of Closing a validly organized and existing municipal corporation under the laws of the State of Utah with full power and authority to execute, deliver and perform its obligations under the Transaction Documents to which it is a party, including the execution, delivery and/or approval of all documents and agreements referred to herein or therein;

Section 3.2. The execution and delivery of each of the Transaction Documents to which the City is a party, the approval by the City of this Purchase Contract and adoption of the Approval Resolution, and compliance by the City with the provisions of any or all of the foregoing documents and the application of the proceeds of the Series 2016 Bonds for the purposes described in the Preliminary Official Statement do not and will not conflict with or result in the breach of any of the terms, conditions or provisions of, or constitute a default under, any existing law, court or administrative regulation, decree or order, agreement, indenture, mortgage, lease or instrument to which the City is a party or by which the City or any of its property is or may be bound;

Section 3.3. The City has duly authorized all necessary action to be taken by it for: (a) the issuance and sale of the Series 2016 Bonds by the Issuer upon the terms and conditions set forth herein, in the Official Statement and in the Indenture and the approval of this Purchase Contract; and (b) the execution, delivery and receipt of each of the Transaction Documents to which the City is a party, and any and all such agreements, certificates and documents as may be required to be executed, delivered and received by the City in order to carry out, effectuate and consummate the transactions contemplated hereby and by the Official Statement;

Section 3.4. When executed by the respective parties thereto, the Transaction Documents to which the City is a party will constitute legal, valid and binding obligations of the City enforceable in accordance with their respective terms;

Section 3.5. The City has complied, and will at the Closing be in compliance in all respects, with the obligations on its part contained in the Transaction Documents to which the City is a party and any and all other agreements relating thereto;

Section 3.6. There is no action, suit, proceeding, inquiry or investigation, at law or in equity, before or by any court, public board or body, pending or threatened against the City or others (a) affecting the existence of the City or the titles of its officers to their respective offices, (b) seeking to prohibit, restrain or enjoin the sale, issuance or delivery of the Series 2016 Bonds or the revenues or assets of the City appropriated or pledged or to be appropriated or pledged to pay the Base Rentals payable under the Lease or the pledge or appropriation thereof, (c) the validity or enforceability of the Series 2016 Bonds or any of the Transaction Documents, (d) contesting in any way the completeness or accuracy of the Preliminary Official Statement or the Official Statement or (e) contesting the powers of the City or any authority for the issuance of the Series 2016

Bonds, or the execution and delivery of any of the Transaction Documents or the transactions contemplated thereby;

Section 3.7. The City is not in breach of or default under any applicable law or administrative regulation of the State of Utah or the United States or any applicable judgment or decree or any loan agreement, note, resolution, agreement, indenture, mortgage, lease, sublease or other instrument to which the City is a party or to which it or any of its property is otherwise subject; and the execution and delivery of the Series 2016 Bonds and the Transaction Documents to which the City is a party, and compliance with the provisions of each thereof, will not conflict with or constitute a breach of or default under any law, administrative regulation, judgment, decree, loan agreement, note, resolution, agreement or other instrument to which the City is a party or to which it or any of its property is otherwise subject;

Section 3.8. No event has occurred or is continuing which, with the passage of time or the giving of notice, or both, would constitute a default or an event of default under any of the Transaction Documents in any manner or to any extent which could have a material adverse effect on the financial condition of the City, the operation of the City, the due performance by the City of its obligations in connection with the issuance, sale and delivery of the Series 2016 Bonds, or the ability of the City to carry out the transactions contemplated by this Purchase Contract and the Preliminary Official Statement, or have an adverse effect on the validity or enforceability, in accordance with their respective terms, of the Series 2016 Bonds or any of the Transaction Documents or in any way adversely affect the existence or powers of the City;

Section 3.9. The City has never failed to pay principal and interest when due on any of its bonded indebtedness or other obligations nor has the City ever failed to appropriate sufficient amounts to timely pay any of its lease obligations;

Section 3.10. The City's audited financial statements as of, and for the year ended, [June 30, 2015] copies of which have heretofore been delivered to the Underwriter, present fairly the financial position of the City at [June 30, 2015] and the results of its operations and changes in financial position for the years then ended; any other statements and data submitted in writing by the City to the Underwriter in connection with the Lease and this Purchase Contract are true and correct in all material respects as of their respective dates; except as described in the Official Statement, since [June 30, 2015] there has been no material adverse change in the condition, financial or otherwise, of the City from that set forth in the audited financial statements as of and for the year ended that date, and the City has not since [June 30, 2015] incurred any material liabilities, directly or indirectly, whether or not arising in the ordinary course of its operations;

Section 3.11. The information contained in the Preliminary Official Statement relating to the City, the application of the proceeds of sale of the Series 2016 Bonds, and the participation by the City in the transactions contemplated by the Transaction Documents and the Preliminary Official Statement was, as of its date, and will be, as of the Closing Date, true and correct in all material respects. The Preliminary Official

Statement does not contain, and the Official Statement, as of its date and as of the Closing Date, will not contain any untrue statement of a material fact, and the Preliminary Official Statement does not omit and the Official Statement, as of its date and as of the Closing Date, will not omit to state a material fact required to be stated therein or necessary to make the statements made therein, in the light of the circumstances under which they were made, not misleading; provided, however, that this representation and warranty shall not be deemed to cover or apply to (x) information provided in writing by the Underwriter and included on the cover page of the Official Statement regarding the principal amount, interest rates, maturities and initial public offering prices of the Series 2016 Bonds or (y) statements in or omissions in the Preliminary Official Statement or the Official Statement under the captions ["THE SERIES 2016 BONDS—Book-Entry Only System," "UNDERWRITING," "APPENDIX A," "APPENDIX C" or "APPENDIX F."]

Section 3.12. The City will not take or omit to take any action that will in any way cause the proceeds from the sale of the Series 2016 Bonds to be applied or result in such proceeds being applied in a manner inconsistent with the Lease and the Indenture;

Section 3.13. The City hereby authorizes the use of the Official Statement, including all amendments and supplements thereto, by the Underwriter in connection with the public offering and sale of the Series 2016 Bonds and consents to the use by the Underwriter prior to the date hereof of the Preliminary Official Statement in connection with the public offering and sale of the Series 2016 Bonds;

Section 3.14. The City agrees reasonably to cooperate with the Underwriter in any endeavor to qualify the Series 2016 Bonds for offering and sale under the securities or "blue sky" laws of such jurisdictions of the United States as the Underwriter may request; provided, however, that the City shall not be required with respect to the offer or sale of the Series 2016 Bonds to file written consent to suit or to file written consent to service of process in any jurisdiction. The City hereby consents to the use of the Official Statement and the Transaction Documents by the Underwriter in obtaining such qualification;

Section 3.15. If at any time from the date of this Purchase Contract through twenty five (25) days following the "end of the underwriting period" (as defined in Rule 15c2-12) any event shall occur that might or would cause the Official Statement to contain any untrue statement of a material fact or to omit to state any material fact required to be stated therein or necessary to make the statements therein, in the light of the circumstances under which they were made, not misleading, the City shall notify the Underwriter and if, in the opinion of the Underwriter, such event requires the preparation and publication of a supplement or amendment to the Official Statement, the City will request that the Issuer supplement or amend the Official Statement in a form and in a manner approved by the Underwriter. If the Official Statement is so supplemented or amended prior to the Closing, such approval by the Underwriter of a supplement or amendment to the Official Statement shall not preclude the Underwriter from thereafter terminating this Purchase Contract, and if the Official Statement is amended or supplemented subsequent to the date hereof and prior to the Closing, the Underwriter

may terminate this Purchase Contract by notification to the City and the Issuer at any time prior to the Closing if, in the reasonable judgment of the Underwriter, such amendment or supplement has or will have a material adverse effect on the marketability of the Series 2016 Bonds;

Section 3.16. Each representation, warranty or agreement stated in any certificate signed by any officer of the City and delivered to either of the Underwriter or the Trustee at or before the Closing shall constitute a representation, warranty or agreement by the City upon which the Underwriter and the Trustee shall be entitled to rely.

Section 3.17. [For the last five years, the City has been in compliance with each undertaking it has entered into pursuant to Rule 15c2-12.]

ARTICLE IV

UNDERWRITER'S CONDITIONS

Section 4.1. The Underwriter has entered into this Purchase Contract in reliance upon the performance by the Issuer of its obligations hereunder. The Underwriter's obligations under this Purchase Contract are and shall be subject to the following further conditions:

(a) At the time of Closing for the Series 2016 Bonds, (1) the Transaction Documents shall be in full force and effect and shall not have been revoked, rescinded, repealed, amended, modified or supplemented, except as therein permitted or as may have been agreed to in writing by the Underwriter, and (2) the Issuer shall have duly adopted and there shall be in full force and effect such resolutions and ordinances as, in the opinion of Ballard Spahr, LLP, bond counsel to the Issuer ("Bond Counsel"), shall be necessary in connection with the transactions contemplated hereby.

(b) The Underwriter may terminate their obligations hereunder by written notice to the Issuer if, at any time subsequent to the date hereof and on or prior to the Closing Date for the Series 2016 Bonds:

(i) (A) Legislation shall have been enacted by the Congress, introduced in the Congress, or recommended to the Congress for passage by the President of the United States or the United States Department of the Treasury or the Internal Revenue Service or any member of the United States Congress, or favorably reported for passage to either House of Congress by any Committee of such House to which such legislation has been referred for consideration, or (B) a decision shall have been rendered by a court established under Article III of the Constitution of the United States, or the United States Tax Court, or (C) an order, ruling, regulation, or communication (including a press release) shall have been issued by the Treasury Department of the United States or the Internal Revenue Service

or (D) any action shall be taken or statement made by or on behalf of the President of the United States or the Department of Treasury or the Internal Revenue Service or any member of the United States Congress which indicates or implies that legislation will be introduced in the current or next scheduled session of the United States Congress, with the purpose or effect, directly or indirectly, of requiring the inclusion in gross income for federal income tax purposes of interest to be received by any owners of the Series 2016 Bonds; or

(ii) Legislation shall be enacted or any action shall be taken by the Securities and Exchange Commission which, in the opinion of the Underwriter, has the effect of requiring the offer or sale of the Series 2016 Bonds to be registered under the Securities Act or any other "security," as defined in the Securities Act, issued in connection with or as part of the issuance of the Series 2016 Bonds to be so registered or the Indenture to be qualified as an indenture under the Trust Indenture Act of 1939, as amended; or any event shall have occurred or shall exist which, in the reasonable judgment of the Underwriter, makes or has made untrue or incorrect in any respect any statement or information contained in the Official Statement or is not or was not reflected in the Official Statement but should be or should have been reflected therein in order to make the statements or information contained therein not misleading in any material respect; or

(iii) In the reasonable judgment of the Underwriter, it is impractical or inadvisable for the Underwriter to market or sell or enforce agreements to sell Series 2016 Bonds because (A) trading in securities generally shall have been suspended on the New York Stock Exchange, Inc., or a general banking moratorium shall have been established by federal or the State of Utah authorities or a material disruption in commercial banking or securities settlement or clearance services shall have occurred, or (B) the State of Utah shall have taken any action, whether administrative, legislative, judicial or otherwise, which would have a material adverse effect on the marketing or sale of the Series 2016 Bonds, including any action relating to (i) the tax status of the Series 2016 Bonds under federal or Utah law as set forth in the opinions of Bond Counsel attached as Appendix E to the Official Statement, or (ii) a limitation on the ability of the Issuer to receive the Base Rentals, or (C) the United States shall have become engaged in hostilities which have resulted in a declaration of war or a national emergency or there shall have occurred any other outbreak or escalation of hostilities or a national or international calamity or crisis, financial or otherwise; or (D) a war involving the United States of America shall have been declared or any other conflict involving the armed forces of the United States of America has escalated, in either case to such a magnitude as to materially adversely affect the Underwriter's ability to market the Series 2016 Bonds; (E) there shall have occurred the declaration of a general banking moratorium by

any authority of the United States or the States of New York or Utah or if any material disruption in commercial banking or securities settlement or clearance services shall have occurred; or

(iv) Any financial rating assigned to the Series 2016 Bonds or any other obligations of the Issuer by Standard & Poor's Ratings Services ("S&P"), Fitch Ratings ("Fitch"), or Moody's Investors Service, Inc. ("Moody's"), as the case may be, shall have been downgraded, withdrawn, or any other action taken, and such action, in the opinion of the Underwriter, has a material adverse effect on the marketability of the Series 2016 Bonds; or

(v) Any litigation shall be instituted, pending or threatened (A) to restrain or enjoin the issuance, sale or delivery of the Series 2016 Bonds, (B) to restrain or enjoin, or otherwise seek recovery of damages with respect to the receipt by the Issuer of the Base Rentals, (C) in any way contesting or affecting any authority for or the validity of the Series 2016 Bonds, any of the proceedings of the Issuer, the City, or the Trustee taken with respect to the issuance or sale thereof, the pledge, appropriation or application of any moneys or securities provided for the payment of the Series 2016 Bonds, or (D) in any way contesting or affecting the existence or powers of the Issuer or the Trustee or the titles of their officers to their respective offices; or

(vi) Any other event or circumstances shall have occurred which shall be beyond the reasonable control of the Underwriter and, in the opinion of the Underwriter, might in any way have a material adverse effect on the marketability of the Series 2016 Bonds.

(c) At or prior to the Closing for the Series 2016 Bonds, the Underwriter shall receive the following:

(i) The approving opinions of Ballard Spahr LLP, Bond Counsel, dated the Closing Date for the applicable Series of Bonds, in substantially the form attached as Appendix E to the Official Statement;

(ii) The supplemental opinion of Ballard Spahr LLP, dated the Closing Date for the Series 2016 Bonds and addressed to the Underwriter, in standard form for similar transactions;

(iii) Opinions of the office of the City Attorney of the City, as counsel for the Issuer and the City, in standard form for similar transactions and satisfactory to Bond Counsel and the Underwriter;

(iv) The Issuer's certificate, dated the Closing Date, signed by the President of the Issuer and the Secretary of the Issuer and in form and substance satisfactory to the Underwriter and Bond Counsel, to the effect that (A) the representations of the Issuer herein are true and correct in all

material respects as of the Closing Date as if made on the Closing Date; (B) except as disclosed in the Official Statement, no litigation is pending or, to the best of their knowledge, threatened against the Issuer (i) to restrain or enjoin the issuance or delivery of any of the Series 2016 Bonds or the collection of moneys pledged under the Indenture, (ii) in any way contesting or affecting the authority for the issuance of the Series 2016 Bonds or the adoption of the Resolution or the execution and delivery of the Transaction Documents to which the Issuer is a party, the validity or enforceability of the Series 2016 Bonds, or the excludability from gross income for federal income tax purposes of interest on the Series 2016 Bonds, (iii) in any way contesting the organization, existence or powers of the Issuer or the titles of its officers to their respective offices, or (iv) contesting or attempting to restrain or enjoining the application of the proceeds thereof or the payment, collection or application of the moneys pledged under the Indenture or the pledge of the moneys pledged under the Indenture, or of other moneys, rights and interests pledged pursuant to the Indenture or the adoption of the Resolution; (C) the descriptions and information contained in the Official Statement relating to the Issuer, its organization and financial and other affairs, the 2016 Projects and the application of the proceeds of sale of the Series 2016 Bonds are correct in all material respects, as of the date of the Official Statement and as of said Closing Date; (D) such descriptions and information, as of the date of the Official Statement did not, and as of said Closing Date do not, contain any untrue statement of a material fact or omit to state a material fact required to be stated therein or necessary to make the statements made therein, in the light of the circumstances under which they were made, not misleading; (E) no event affecting the Issuer has occurred since the date of the Official Statement that should be disclosed in the Official Statement for the purpose for which it is to be used or that is necessary to be disclosed therein in order to make the statements and information therein not misleading in any material respect; (F) the Transaction Documents to which the Issuer is a party have been duly authorized, executed and delivered by the Issuer and, assuming due authorization, execution and delivery by the other parties thereto, the Transaction Documents to which the Issuer is a party constitute legal, valid and binding agreements of the Issuer enforceable in accordance with their respective terms except as enforcement may be limited by bankruptcy, insolvency, reorganization, moratorium or other similar laws affecting creditors' rights and by the availability of equitable remedies; (G) the Resolution authorizing the execution and delivery of the Transaction Documents to which the Issuer is a party have been duly adopted and have not been modified, amended or repealed; and (H) the execution and delivery of the Transaction Documents to which the Issuer is a party, and this Purchase Contract and compliance with the provisions thereof, under the circumstances contemplated thereby, do not and will not in any material respect conflict with or constitute on the part of the Issuer a breach of or default under any

indenture, mortgage, deed of trust, agreement or other instrument to which the Issuer is a party or any law, public administrative rule or regulation, court order or consent decree to which the Issuer is subject;

(v) The City's certificate, dated the Closing Date, signed by the Mayor of the City and the City Recorder of the City and in form and substance satisfactory to the Underwriter and Bond Counsel, to the effect that (A) the representations of the City herein are true and correct in all material respects as of the Closing Date as if made on the Closing Date; (B) except as disclosed in the Official Statement, no litigation is pending or, to the best of their knowledge, threatened against the City (i) to restrain or enjoin the issuance or delivery of any of the Series 2016 Bonds or the collection of moneys pledged under the Indenture, (ii) in any way contesting or affecting the authority for the issuance of the Series 2016 Bonds or the adoption of the Approval Resolution or the execution and delivery of the Transaction Documents to which the City is a party, the validity or enforceability of the Series 2016 Bonds, or the excludability from gross income for federal income tax purposes of interest on the Series 2016 Bonds, (iii) questioning or challenging any power of the City, including its ability to levy taxes, or (iv) in any way contesting the organization, existence or powers of the City or the titles of its officers to their respective offices, or (v) contesting or attempting to restrain or enjoining the application of the proceeds thereof or the payment, collection or application of the moneys pledged under the Indenture or the pledge of the moneys pledged under the Indenture, or of other moneys, rights and interests pledged pursuant to the Indenture or the adoption of the Approval Resolution; (C) the descriptions and information contained in the Official Statement relating to the City, its organization and financial and other affairs, the 2016 Project and the application of the proceeds of sale of the Series 2016 Bonds are correct in all material respects, as of the date of the Official Statement and as of said Closing Date; (D) such descriptions and information, as of the date of the Official Statement did not, and as of said Closing Date do not, contain any untrue statement of a material fact or omit to state a material fact required to be stated therein or necessary to make the statements made therein, in the light of the circumstances under which they were made, not misleading; (E) no event affecting the City has occurred since the date of the Official Statement that should be disclosed in the Official Statement for the purpose for which it is to be used or that is necessary to be disclosed therein in order to make the statements and information therein not misleading in any material respect; (F) the Transaction Documents to which the City is a party have been duly authorized, executed and delivered by the City and, assuming due authorization, execution and delivery by the other parties thereto, the Transaction Documents to which the City is a party constitute legal, valid and binding agreements of the City enforceable in accordance with their respective terms except as enforcement may be limited by bankruptcy, insolvency, reorganization, moratorium or other similar laws affecting

creditors' rights and by the availability of equitable remedies; (G) the Approval Resolution authorizing the execution and delivery of the Transaction Documents to which the City is a party have been duly adopted and have not been modified, amended or repealed; and (H) the execution and delivery of the Transaction Documents to which the City is a party, and this Purchase Contract and compliance with the provisions thereof, under the circumstances contemplated thereby, do not and will not in any material respect conflict with or constitute on the part of the City a breach of or default under any indenture, mortgage, deed of trust, agreement or other instrument to which the City is a party or any law, public administrative rule or regulation, court order or consent decree to which the City is subject;

(vi) Copies of each of the Transaction Documents, duly executed by each of the parties thereto;

(vii) Copies of the Tax Certificate of the Issuer and the City, relating to matters affecting the excludability from gross income for federal income tax purposes of interest on the Series 2016 Bonds, including the use of proceeds of sale of the Series 2016 Bonds and matters relating to arbitrage rebate pursuant to Section 148 of the Code and the applicable regulations thereunder, in form and substance satisfactory to Bond Counsel;

(viii) Copies of the Preliminary Official Statement and copies of the Official Statement executed on behalf of the Issuer by the President of the Issuer and on behalf of the City by the Mayor of the City;

(ix) Evidence satisfactory to the Underwriter that the Series 2016 Bonds have received ratings of "_____" by _____;

(x) [The Escrow Verification Report of _____;]

(xi) [Specimen copies of the Bond Insurance Policy and the Reserve Surety;]

(xii) [Such opinions and certificates of the Insurer as are customary for similar transactions;] and

(xiii) All documents, certificates and opinions required by the Indenture; and

(xiv) Such additional legal opinions, certificates, instruments and other documents as the Underwriter or Bond Counsel may reasonably request.

All the opinions, letters, certificates, instruments and other documents mentioned above or elsewhere in this Purchase Contract shall be deemed to be in compliance with

the provisions hereof if, but only if, they are in form and substance satisfactory to the Underwriter, and the Underwriter shall have the right to waive any condition set forth in this Section.

ARTICLE V

EXPENSES

All expenses and costs in connection with the authorization, issuance and sale of the Series 2016 Bonds to the Underwriter, including rating agency fees, the costs of printing of the Series 2016 Bonds, the costs of printing the Official Statement and the Preliminary Official Statement, advertising costs, the initial fees of the Trustee in connection with the issuance of the Series 2016 Bonds, the fees and expenses of Bond Counsel, the fees and expenses of the escrow agent and the escrow verification agent, counsel to the Issuer, the municipal advisor to the Issuer, [the premiums relating to the Bond Insurance Policy and the Reserve Surety,] and travel and other expenses shall be costs and expenses of the Issuer and shall be paid by the Issuer.

ARTICLE VI

GENERAL

Any notice or other communication to be given to the Underwriter under this Purchase Contract may be given by delivering the same in writing to the Underwriter, _____, [Address]. Any notice or other communication to be given to the Issuer under this Purchase Contract may be given by delivering the same in writing to Municipal Building Authority of West Valley City, Utah, 3600 Constitution Boulevard, West Valley City, Utah 84119, Attention: President, with a copy thereof to Issuer's counsel, Eric Bunderson, Esq., 3600 Constitution Boulevard, West Valley City, Utah 84119. Any notice or other communication to be given to the City under this Purchase Contract may be given by delivering the same in writing to West Valley City, 3600 Constitution Boulevard, West Valley City, Utah 84119, Attention: Mayor, with a copy thereof to the City's counsel, Eric Bunderson, Esq., 3600 Constitution Boulevard, West Valley City, Utah 84119 The approval or other action or exercise of judgment by the Underwriter shall be evidenced by a writing signed on behalf of the Underwriter and delivered to the Issuer.

This Purchase Contract is made solely for the benefit of the Issuer and the Underwriter (including its successors or assigns) and no other person shall acquire or have any right hereunder or by virtue hereof. All the representations, warranties, covenants and agreements contained herein shall remain operative and in full force and effect and shall survive delivery of and payment of the Series 2016 Bonds hereunder and regardless of any investigation made by the Underwriter or on its behalf.

This Purchase Contract shall be governed by the laws of the State of Utah.

This Purchase Contract may be executed in several counterparts, each of which shall be an original and all of which shall constitute but one and the same instrument.

The Issuer and the City acknowledge and agree that (i) the purchase and sale of the Series 2016 Bonds pursuant to this Purchase Contract is an arm's-length commercial transaction among the Issuer, the City and the Underwriter, (ii) in connection therewith and with the discussions, undertakings and procedures leading up to the consummation of such transaction, the Underwriter is and has been acting solely as a principal and is not acting as the agent, advisor or fiduciary of the Issuer or the City, (iii) the Underwriter has not assumed an advisory or fiduciary responsibility in favor of the Issuer or the City with respect to the offering contemplated hereby or the discussions, undertakings and procedures leading thereto (irrespective of whether the Underwriter has provided other services or is currently providing other services to the Issuer or the City on other matters) and the Underwriter has no obligation to the Issuer or the City with respect to the offering contemplated hereby except the obligations expressly set forth in this Purchase Contract, (iv) the Underwriter is not acting as municipal advisor (as defined in Section 15B of the Securities Exchange Act of 1934, as amended), and (v) the Issuer and the City consulted their own legal, financial and other advisors to the extent they deemed appropriate in connection with the offering of the Series 2016 Bonds.

This Purchase Contract contains the entire agreement between the parties relating to the subject matter hereof, and all previous representations, endorsements, promises, agreements or understandings, oral, written or inferred, between the parties relating to the subject matter hereof are superseded hereby.

This Purchase Contract shall become effective upon the execution by [UNDERWRITER] and the acceptance hereof by the Issuer.

Very truly yours,

[UNDERWRITER]

By: _____

Its: _____

MUNICIPAL BUILDING AUTHORITY
OF WEST VALLEY CITY, UTAH

By:_____
President

ATTEST:

By:_____
Secretary

(SEAL)

WEST VALLEY CITY, UTAH

By:_____
Mayor

ATTEST:

By:_____
City Recorder

(SEAL)

SCHEDULE A

$_____
MUNICIPAL BUILDING AUTHORITY OF
WEST VALLEY CITY, UTAH
LEASE REVENUE AND REFUNDING BONDS,
SERIES 2016

Maturity Date (_____)	Principal Amount	Interest Rate

FIRST SUPPLEMENTAL INDENTURE OF TRUST

Dated as of [June 1], 2016

between

MUNICIPAL BUILDING AUTHORITY
OF WEST VALLEY CITY, UTAH

and

_____

Supplementing the General Indenture of Trust
Dated as of [June 1], 2016

Table of Contents

Page

ARTICLE I SUPPLEMENTAL INDENTURE; DEFINITIONS

Section 1.1. Supplemental Indenture 4
Section 1.2. Uniform Definitions 4
Section 1.3. Amended Definitions 4
Section 1.4. Additional Definitions 4

ARTICLE II ISSUANCE OF THE SERIES 2016 BONDS

Section 2.1. Principal Amount, Designation and Series 7
Section 2.2. Date, Maturity and Interest Rates 7
Section 2.3. Redemption 8
Section 2.4. Execution of Bonds 10
Section 2.5. Delivery of Bonds 10
Section 2.6. Limited Obligation 10
Section 2.7. Record of Payment 10
Section 2.8. Book-Entry Only System 10
Section 2.9. Series 2016 Bonds as Initial Bonds 13

ARTICLE III FUNDS AND ACCOUNTS

Section 3.1. Creation of Series 2016 Accounts 14
Section 3.2. Disbursement of Series 2016 Bond Proceeds 14
Section 3.3. Costs of Issuance Account; Payment of Costs of Issuing Series 2016 Bonds 14
Section 3.4. Deposit to and Use of Series 2016 Account of Construction Fund 14
Section 3.5. Series 2016 Debt Service Reserve Account 15

ARTICLE IV

ARTICLE V CONFIRMATION OF GENERAL INDENTURE

Section 5.1. Confirmation of General Indenture 17

ARTICLE VI MISCELLANEOUS

Section 6.1. Confirmation of Sale of Series 2016 Bonds 18
Section 6.2. Illegal, etc. Provisions Disregarded 18
Section 6.3. Applicable Law 18
Section 6.4. Headings for Convenience Only 18
Section 6.5. Counterparts 18
Section 6.6. First Supplemental Indenture Construed with General Indenture 18

EXHIBIT A

FORM OF SERIES 2016 BONDS 1

EXHIBIT B

COST OF ISSUANCE DISBURSEMENT REQUEST 1

FIRST SUPPLEMENTAL INDENTURE OF TRUST

This FIRST SUPPLEMENTAL INDENTURE OF TRUST, dated as of [June 1], 2016 (the "First Supplemental Indenture"), by and between the MUNICIPAL BUILDING AUTHORITY OF WEST VALLEY CITY, UTAH, a nonprofit corporation duly organized and existing under the laws of the State of Utah (the "Authority"), and _____, a national banking association duly organized and existing under the laws of the United States of America, authorized by law to accept and execute trusts and having its principal office in Salt Lake City, Utah (the "Trustee"),

W I T N E S S E T H:

WHEREAS, the Authority has entered into a General Indenture of Trust, dated as of [June 1], 2016 (the "General Indenture") with the Trustee; and

WHEREAS, West Valley City, Utah (the "City") has previously authorized and directed the creation of the Authority; and

WHEREAS, the Authority has been duly and regularly created, established and is organized and existing as a nonprofit corporation under and by virtue of the provisions of the constitution and laws of the State of Utah, including, in particular, the provisions of the Local Building Authority Act, Title 17D, Chapter 2, Utah Code Annotated 1953, as amended (the "Local Building Authority Act"), the Local Government Bonding Act, Title 11, Chapter 14, Utah Code Annotated 1953, as amended (the "Local Government Bonding Act"), and the Utah Refunding Bond Act, Title 11, Chapter 27, Utah Code Annotated 1953, as amended (the "Refunding Act" and collectively with the Local Building Authority Act and the Local Government Bonding Act, the "Act"); and

WHEREAS, under the Articles of Incorporation of the Authority (the "Articles") and the Act, the objects and purposes for which the Authority has been founded and incorporated are to acquire, improve or extend one or more projects and to finance their costs on behalf of the City in accordance with the procedures and subject to the limitations of the Act in order to accomplish the public purposes for which the City exists; and

WHEREAS, the Authority is possessed under the Articles with all powers set forth in the Act and the Constitution and other laws of the State of Utah, including, without limitation, the power to acquire, own, hold, lease and improve real and personal property, and to enter into agreements providing for a lease, mortgage or other conveyance of real and personal property and to issue its notes, bonds or other obligations; and

WHEREAS, the Authority desires to (a) finance the acquisition and construction of a new fire station and the remodeling of an existing fire station and, related improvements (the "Fire Station Projects") (b) refinance the Maverik Center (the "Maverik Center Project" and together with the Fire Station Projects, the "2016 Project"), by refunding the Authority's outstanding lease revenue bonds relating to the Maverik Center Project (the "Refunded Bonds"); and

WHEREAS, in order to (a) finance the costs associated with the Fire Station Projects, (b) refinance the Maverik Center Project by refunding the Refunded Bonds, (c) fund any required deposit to a debt service reserve fund, and (d) pay costs associated with the issuance of the Series 2016 Bonds (hereinafter defined), the Authority has determined to issue its Lease Revenue and Refunding Bonds, Series 2016, in the aggregate principal amount of $_____ (the "Series 2016 Bonds"); and

WHEREAS, _____. (the "Underwriter") has offered to purchase the Series 2016 Bonds in accordance with the terms and conditions of a Bond Purchase Agreement dated [June __], 2016 (the "Bond Purchase Agreement"), by and among the Authority, the City, and the Underwriter; and

WHEREAS, the Authority desires to sell the Series 2016 Bonds to the Underwriter in accordance with the terms and condition of the Bond Purchase Agreement; and

WHEREAS, the City is the owner of fee simple title to the site[s] upon which the 2016 Project is located (the "Project Site") and has agreed to lease such Project Site to the Authority pursuant to a Ground Lease Agreement dated as of [June 1], 2016 (the "Ground Lease"); and

WHEREAS, the Series 2016 Bonds will be authorized, issued and secured under the General Indenture of Trust dated as of _____, 2016 (the "General Indenture") between the Authority and the Trustee, as supplemented by this First Supplemental Indenture (collectively with the General Indenture, and any amendments thereto or hereto, the "Indenture"); and

WHEREAS, pursuant to a Master Lease Agreement dated as of [June 1], 2016 (the "Master Lease"), between the Authority and the City, the City, as lessee, has agreed to lease the 2016 Project from the Authority, as lessor; and

WHEREAS, to further secure its payment obligations under the Indenture, the Authority proposes to grant a lien on and security interest in the 2016 Project pursuant to (i) a Leasehold Deed of Trust, Assignment of Rents and Security Agreement (as hereinafter defined); and (ii) an Assignment of Ground Lease (as hereinafter defined); and

WHEREAS, under the provisions of a resolution adopted by the City Council of the City on May 10, 2016, the City has authorized and approved the execution of the Master Lease and has authorized and approved certain actions to be taken by the Authority in connection with the issuance of the Series 2016 Bonds, including the execution, delivery and performance of the General Indenture and this First Supplemental Indenture; and

WHEREAS, under the provisions of a resolution adopted on May 10, 2016, the Governing Board of the Authority (the "Governing Board") has authorized, approved and directed the execution of the Master Lease and this First Supplemental Indenture and has

authorized and approved certain actions to be taken by the Authority in connection with the issuance of the Series 2016 Bonds hereunder; and

WHEREAS, the execution and delivery of the Series 2016 Bonds and of this First Supplemental Indenture have in all respects been duly authorized and all things necessary to make the Series 2016 Bonds, when executed by the Authority and authenticated by the Trustee, the valid and binding legal obligations of the Authority and to make the General Indenture, as amended and supplemented by this First Supplemental Indenture, a valid assignment and pledge of the amounts pledged to the payment of the principal of and premium, if any, and interest on the Series 2016 Bonds and a valid assignment of the rights of the Authority with respect to the 2016 Project under the Master Lease (except the rights of the Authority under Sections 6.3(d), 6.3(j), 13.3 and 14.5 of the Master Lease) have been done and performed.

NOW, THEREFORE, for and in consideration of the premises and the mutual promises and covenants herein contained, the parties hereto agree as follows:

ARTICLE I

SUPPLEMENTAL INDENTURE; DEFINITIONS

Section 1.1. Supplemental Indenture. This First Supplemental Indenture is supplemental to, and is adopted in accordance with and pursuant to Articles II and XI of the General Indenture.

Section 1.2. Uniform Definitions. Unless the context clearly requires otherwise and except as otherwise defined in Section 1.3 hereof, all terms used herein shall have the meanings set forth in Article I of the General Indenture and Article I of this First Supplemental Indenture, and Article I of the Master Lease.

Section 1.3. Amended Definitions. The following definitions contained in Article I of the General Indenture are hereby amended to read as follows:

"Interest Payment Date" means with respect to the Series 2016 Bonds, each _____ and _____, commencing _____, 201__.

Section 1.4. Additional Definitions. Defined terms used in the preambles to this First Supplemental Indenture shall have the meanings given to such terms therein. In addition, for purposes of the General Indenture, this First Supplemental Indenture and the Master Lease, the following terms shall, unless the context clearly requires otherwise, have the meanings as follows:

"Assignment of Ground Lease Agreement" means the agreement dated as of [June 1], 2016, by and between the Authority and the Trustee.

"Cede" means Cede & Co. and any substitute nominee of DTC who becomes the registered Bondholder.

["Deed of Trust, Assignment of Rents and Security Agreement" means the agreement by that name dated as of [June 1], 2016 by and between the Authority and the Trustee.]

"DTC" means The Depository Trust Company, New York, New York, a limited purpose trust company organized under the laws of the State of New York.

["Escrow Agent" means _____, as Escrow Agent under the Escrow Agreement.]

["Escrow Agreement" means the Escrow Deposit Agreement dated as of [June 1], 2016, by and between the Escrow Agent and the Authority and relating to the Refunded Bonds.]

"Fire Station Projects" means collectively, the acquisition and construction of a new fire station and the remodeling of an existing fire station and, related improvements.

[“Insurer” means _____.

“Insurance Policy” means the municipal bond insurance policy issued by the Insurer guaranteeing the payment of principal and interest on the Series 2016 Bonds when due. For purposes of the Indenture, the Insurance Policy shall constitute a Security Instrument under the Indenture.]

“Leasehold Deed of Trust, Assignment of Rents and Security Agreement” means the agreement by that name dated as of [June 1], 2016 by and between the Authority and the Trustee.

“Maverik Center Project” means the refinancing of the Maverik Center by refunding the Authority’s outstanding lease revenue bonds relating to the Maverik Center Project

“Original Issue Date” means with respect to the Series 2016 Bonds, the date the Series 2016 Bonds are initially issued, i.e., _____, 2016.

“Refunded Bonds” means, the Authority’s outstanding Lease Revenue Bonds, Series 2006A and Series 2006B.

“Register” means the record of ownership of the Series 2016 Bonds maintained by the Bond Registrar.

“Security Documents” means the Leasehold Deed of Trust, Assignment of Rents, Security Agreement and the Assignment of Ground Lease.

“Series 2016 Bonds” means the Lease Revenue and Refunding Bonds, Series 2016, herein authorized.

“Series 2016 Construction Account” means the account established within the Construction Fund under the General Indenture held in trust by the Trustee.

“Series 2016 Cost of Issuance Account” means the account established in Section 3.1 herein.

“Series 2016 Debt Service Reserve Account” means the separate account within the Debt Service Reserve Fund created in Section 3.2 hereof.

“[Series 2016 Debt Service Reserve Requirement” means, with respect to the Series 2016 Bonds, an amount equal to $_____. The Debt Service Reserve Requirement for the Series 2016 Bonds shall initially be funded with the Series 2016 Reserve Instrument.]

“[Series 2016 Reserve Instrument” means the municipal bond debt service reserve insurance policy issued by the Series 2016 Reserve Instrument Provider guaranteeing certain payments into the Series 2016 Debt Service Reserve Account with respect to the

Series 2016 Bonds as provided herein. The Series 2016 Reserve Instrument constitutes a Reserve Instrument as defined in the Indenture.]

"[Series 2016 Reserve Instrument Provider" means _____., a New York stock insurance company, or any successor thereto or assignee thereof. The Series 2016 Reserve Instrument Provider constitutes a Reserve Instrument Provider under the Indenture.]

"2016 Project" means collectively, the Fire Station Projects and the Maverik Center Project.

"Underwriter" means _____.

ARTICLE II

ISSUANCE OF THE SERIES 2016 BONDS

Section 2.1. Principal Amount, Designation and Series. The Series 2016 Bonds are hereby authorized for issuance under the Indenture for the purpose of providing funds to (i) finance the costs associated with the Fire Station Projects, (ii) refinance the Maverik Center Project by refunding the Refunded Bonds, (iii) fund the deposit of any required reserve, and (iv) pay the costs of issuance of the Series 2016 Bonds. The Series 2016 Bonds shall be limited to $_____ in aggregate principal amount, shall be issued in fully registered form, in Five Thousand Dollar ($5,000) denominations each or any integral multiple thereof, and shall be in substantially the form and contain substantially the terms contained in Exhibit A attached hereto and made a part hereof, and shall bear interest at the rates and be payable as to principal or redemption price as specified herein. The Series 2016 Bonds shall be designated as, and shall be distinguished from the Bonds of all other series by the title, "Municipal Building Authority of West Valley City, Utah Lease Revenue and Refunding Bonds, Series 2016."

Section 2.2. Date, Maturity and Interest Rates. The Series 2016 Bonds shall be dated as of the Original Issue Date, and shall mature on _____ in the years and in the amounts and shall bear interest from the Interest Payment Date next preceding their date of authentication thereof unless authenticated as of an Interest Payment Date, in which event such Bonds shall bear interest from such date, or unless such Bonds are authenticated prior to the first Interest Payment Date, in which event such Bonds shall bear interest from their Original Issue Date or unless, as shown by the records of the Trustee, interest on the Series 2016 Bonds shall be in default, in which event such Bonds shall bear interest from the date to which interest has been paid in full, or unless no interest shall have been paid on such Bonds, in which event such Bonds shall bear interest from their Original Issue Date, payable on each Interest Payment Date, at the rates per annum as set forth below:

Maturity Date (_____)	Principal Amount	Interest Rate

Interest shall be calculated on the basis of a year of 360 days comprised of twelve 30-day months.

The interest on the Series 2016 Bonds so payable, and punctually paid and duly provided for, on any Interest Payment Date will be paid to the Registered Owner thereof at the close of business on the Regular Record Date for such interest. Any such interest not so punctually paid or duly provided for shall forthwith cease to be payable to the Registered Owner of any Series 2016 Bonds on such Regular Record Date, and may be paid to the Registered Owner thereof at the close of business on a Special Record Date for the payment of such defaulted interest to be fixed by the Trustee, notice thereof to be given to such Registered Owner not less than ten (10) days prior to such Special Record Date. The principal of and premium, if any, on the Series 2016 Bonds are payable upon presentation and surrender thereof at the principal corporate trust office of the Trustee. Interest shall be paid by check or draft mailed on each Interest Payment Date to the Holder of each of the Series 2016 Bonds as the name and address of such Holder appears on the Record Date in the Register.

Section 2.3. Redemption.

(a) [Optional Redemption. The Series 2016 Bonds maturing on or prior to _____, 20__, are not subject to optional redemption. The Series 2016 Bonds (including related mandatory sinking fund payments) maturing on or after _____, 20__, are subject to redemption at the option of the Authority in whole or in part at any time on or after _____, 20__, in such order of maturity as shall be directed by the Authority at a redemption price of 100% of the principal amount of the Series 2016 Bonds to be redeemed, plus accrued interest to the date of redemption.

(b) Mandatory Sinking Fund Redemption.

(i) The Series 2016 Bonds maturing on _____, 20__ are subject to mandatory sinking fund redemption at a redemption price equal to 100% of the principal amount thereof plus accrued interest thereon to the redemption date on the dates and in the principal amounts as follows:

Mandatory Sinking Fund Date (_____)	Principal Amount

*Final Maturity Date

To the extent that a mandatory sinking fund redemption results in the reduction in aggregate principal amount of the Series 2016 Bonds Outstanding, a Registered Owner shall not be required to submit its Series 2016 Bond certificate to the Trustee for payment and shall instead make an appropriate notation on such Bond certificate indicating the date and amounts of such redemption in principal, except in the case of final maturity, in which case the certificate must be presented to the Trustee prior to payment. The Trustee's records shall govern in the case of discrepancy with the noted schedule on the Series 2016 Bonds, absent manifest error.

Upon redemption of any Series 2016 Bonds, other than by application of such mandatory sinking fund redemption, an amount equal to the principal amount so redeemed will be credited toward a part or all of any one or more of such mandatory sinking fund redemption amounts for the related Series 2016 Bonds, in such order as shall be directed by the Authority.]

(c) Extraordinary Redemption. The Series 2016 Bonds shall be callable for redemption prior to maturity in whole on any date, if (i) the 2016 Project or a material portion thereof is damaged or destroyed or taken in a condemnation proceeding, or a material defect in the construction of the 2016 Project shall become apparent, or title to or the use of all or any material portion of the 2016 Project shall be lost by reason of a defect in title thereto, (ii) the Net Proceeds of any insurance policy, performance bond or condemnation award made available by reason of one or more such occurrences shall be insufficient to pay in full the cost of repairing or replacing such portion of the 2016 Project, and (iii) the City elects to discharge its obligation to repair and replace such portion of the 2016 Project by depositing such Net Proceeds into the Bond Fund. Upon the deposit of such Net Proceeds in the Bond Fund, the payment obligations of the City with respect to the 2016 Project under the Master Lease shall terminate and the City shall have no further obligation for the payment of Base Rentals and Additional Rentals thereunder with respect to the 2016 Project, and possession of the 2016 Project, as well as all right, title and interest of the City and the Authority in any funds or accounts created under the Indenture with respect to the 2016 Project shall be surrendered to the Trustee, as trustee for the Bondholders. Thereafter, the Indenture and the Security Documents applicable to the 2016 Project may, subject to the limitations of Article IX of the General Indenture, be foreclosed and the Authority's interest in the 2016 Project liquidated and the proceeds of such liquidation and the Net Proceeds of any insurance policy, performance bond or condemnation award so deposited in the Bond Fund, as well as all other moneys on deposit in any fund created under the Indenture with respect to the 2016 Project (except moneys held in the Rebate Fund or for the payment of Bonds not then deemed outstanding), shall be applied to the redemption of the Series 2016 Bonds at the earliest date practicable, as specified in a written notice from the Authority to the Trustee. Any such redemption of the Series 2016 Bonds shall be made upon payment of all or a prorated portion of the principal amount thereof plus accrued interest thereon to the redemption date. IN THE EVENT THE SERIES 2016 BONDS ARE TO BE REDEEMED BY PAYMENT OF AN AMOUNT LESS THAN THE OUTSTANDING

PRINCIPAL AMOUNT THEREOF, AND ACCRUED INTEREST TO THE REDEMPTION DATE, NO FURTHER CLAIM FOR PAYMENT MAY BE HAD BY THE BONDHOLDERS AGAINST THE AUTHORITY, THE CITY, OR THE TRUSTEE WITH RESPECT TO SAID SERIES 2016 BONDS. In the event there are moneys remaining in the Bond Fund after payment in full of Series 2016 Bonds issued under the Indenture, the Trustee is authorized and directed to transfer said moneys to the City.

Section 2.4. Execution of Bonds. The Chair/President is hereby authorized to execute by facsimile or manual signature the Series 2016 Bonds and the Secretary-Treasurer to countersign by facsimile or manual signature the Series 2016 Bonds and to have imprinted, engraved, lithographed, stamped or otherwise placed on the Series 2016 Bonds a facsimile of the official seal of the Authority, and the Trustee shall manually authenticate the Series 2016 Bonds.

Section 2.5. Delivery of Bonds. It is hereby determined that the Series 2016 Bonds shall be authenticated and delivered to the Underwriter on such date upon which the Chair/President and the Underwriter shall mutually agree, upon payment of the purchase price thereof.

Section 2.6. Limited Obligation. The Series 2016 Bonds, together with interest thereon, shall be special, limited obligations of the Authority as described in the General Indenture.

Section 2.7. Record of Payment. In the event of a redemption, acceleration, or any other similar transaction necessitating a reduction in aggregate principal amount of any of the Series 2016 Bonds outstanding, a Bondholder shall make an appropriate notation on the Series 2016 Bonds certificate indicating the date and amounts of such reduction in principal, except in the case of final maturity in which case the certificate must be presented to the Paying Agent prior to payment. In the case of a discrepancy between the record of payments on the Series 2016 Bonds and the Bond Registrar's records, the Bond Registrar's records shall govern.

Section 2.8. Book-Entry Only System.

(a) Except as provided in paragraphs (b) and (c) of this Section 2.8, the registered holder of all Series 2016 Bonds shall be, and the Series 2016 Bonds shall be registered in the name of, Cede and Co. ("Cede"), as nominee of The Depository Trust Company, New York, New York (together with any substitute securities depository appointed pursuant to paragraph (c)(iii) of this Section 2.8, ("DTC"). Payment of interest for any Series 2016 Bond, as applicable, shall be made in accordance with the provisions of this Indenture to the account of Cede on the Interest Payment Date for the Series 2016 Bonds at the address indicated for Cede in the registry books of the Trustee.

(b) The Series 2016 Bonds shall be initially issued in the form of a separate registered Bond in the amount of each separate stated maturity of the

Series 2016 Bonds. Upon initial issuance, the ownership of each such Series 2016 Bond shall be registered in the registry books of the Authority kept by the Trustee, in the name of Cede, as nominee of DTC. With respect to Series 2016 Bonds so registered in the name of Cede, the Authority, the Trustee and any Paying Agent shall have no responsibility or obligation to any DTC participant or to any beneficial owner of any of such Series 2016 Bonds. Without limiting the immediately preceding sentence, the Authority, the Trustee and any Paying Agent shall have no responsibility or obligation with respect to (i) the accuracy of the records of DTC, Cede or any DTC participant with respect to any beneficial ownership interest in the Series 2016 Bonds; (ii) the delivery of any DTC participant, beneficial owner or other person, other than DTC, of any notice with respect to the Series 2016 Bonds, including any notice of redemption; or (iii) the payment to any DTC participant, beneficial owner or other person, other than DTC, of any amount with respect to the principal or redemption price of, or interest on, any of the Series 2016 Bonds. The Authority, the Trustee and any Paying Agent may treat DTC as, and deem DTC to be, the absolute owner of each Series 2016 Bond for all purposes whatsoever, including (but not limited to) (1) payment of the principal or redemption price of, and interest on, each such Series 2016 Bond, (2) giving notices of redemption and other matters with respect to such Series 2016 Bonds and (3) registering transfers with respect to such Series 2016 Bonds. The Paying Agent shall pay the principal or redemption price of, and interest on, all Series 2016 Bonds only to or upon the order of DTC, and all such payments shall be valid and effective to satisfy fully and discharge the Authority's obligations with respect to such principal, or redemption price, and interest, to the extent of the sum or sums so paid. Except as provided in paragraph (c) of this Section 2.8, no person other than DTC shall receive a Series 2016 Bond evidencing the obligation of the Authority to make payments of principal or redemption price of, and interest on, any such Series 2016 Bond pursuant to this Indenture. Upon delivery by DTC to the Trustee of written notice to the effect that DTC has determined to substitute a new nominee in place of Cede, and subject to the transfer provisions of this Indenture, the word "Cede" in this Indenture shall refer to such new nominee of DTC.

Except as provided in paragraph (c)(iii) of this Section 2.8, and notwithstanding any other provisions of this Indenture, the Series 2016 Bonds may be transferred, in whole but not in part, only to a nominee of DTC, or by a nominee of DTC to DTC or a nominee of DTC, or by DTC or a nominee of DTC to any successor securities depository or any nominee thereof.

(c) (i) DTC may determine to discontinue providing its services with respect to the Series 2016 Bonds at any time by giving written notice to the Authority, the Trustee and the Paying Agent, which notice shall certify that DTC has discharged its responsibilities with respect to the Series 2016 Bonds under applicable law.

(ii) The Authority, in its sole discretion and without the consent of any other person, may, be notice to the Trustee, terminate the services

of DTC with respect to the Series 2016 Bonds if the Authority determines that the continuation of the system of book-entry-only transfers through DTC is not in the best interests of the beneficial owners of the Series 2016 Bonds or the Authority; and the Authority shall, by notice to the Trustee, terminate the services of DTC with respect to the Series 2016 Bonds upon receipt by the Authority, the Trustee, and the Paying Agent of written notice from DTC to the effect that DTC has received written notice from DTC participants having interests, as shown in the records of DTC, in an aggregate principal amount of not less than fifty percent (50%) of the aggregate principal amount of the then outstanding Series 2016 Bonds to the effect that: (1) DTC is unable to discharge its responsibilities with respect to the Series 2016 Bonds; or (2) a continuation of the requirement that all of the outstanding Series 2016 Bonds be registered in the registration books kept by the Trustee in the name of Cede, as nominee of DTC, is not in the best interests of the beneficial owners of the Series 2016 Bonds.

(iii) Upon the termination of the services of DTC with respect to the Series 2016 Bonds pursuant to subsection (c)(ii)(2) hereof, or upon the discontinuance or termination of the services of DTC with respect to the Series 2016 Bonds pursuant to subsection (c)(i) or subsection (c)(ii)(1) hereof the Authority may within 90 days thereafter appoint a substitute securities depository which, in the opinion of the Authority, is willing and able to undertake the functions of DTC hereunder upon reasonable and customary terms. If no such successor can be found within such period, the Series 2016 Bonds shall no longer be restricted to being registered in the registration books kept by the Trustee in the name of Cede, as nominee of DTC. In such event, the Authority shall execute and the Trustee shall authenticate Bond certificates as requested by DTC of like principal amount, maturity and series, in authorized denominations to the identifiable beneficial owners in replacement of such beneficial owners' beneficial interest in the Series 2016 Bonds.

(iv) Notwithstanding any other provision of this Indenture to the contrary, so long as any Series 2016 Bond is registered in the name of Cede, as nominee of DTC, all payments with respect to the principal or redemption price of, and interest on, such Series 2016 Bond and all notices with respect to such Series 2016 Bond shall be made and given, respectively, to DTC as provided in the hereinafter defined Representation Letter of the Authority addressed to DTC and in DTC's operational arrangements.

(v) In connection with any notice or other communication to be provided to Owners of Series 2016 Bonds registered in the name of Cede pursuant to the Indenture by the Authority or the Trustee with respect to any consent or other action to be taken by such Owners, the Authority shall establish a record date for such consent or other action by such

Owners and give DTC notice of such record date not less than fifteen (15) days in advance of such record date to the extent possible.

(vi) A blanket Representation Letter (the "Representation Letter") has been executed and delivered by the Authority. The execution and delivery of the Representation Letter shall not in any way limit the provisions of this Section 2.8 hereof or in any other way impose upon the Authority or the Trustee any obligation whatsoever with respect to persons having interests in the Series 2016 Bonds other than the registered owners of the Series 2016 Bonds, as shown on the registration books kept by the Trustee. The Trustee shall take all action necessary for all representations of the Authority and the Trustee in the Representation Letter or any other comparable agreement with a securities depository with respect to the Trustee and in DTC's operational arrangements to at all times by complied with.

Section 2.9. Series 2016 Bonds as Initial Bonds. The Series 2016 Bonds are issued as the Initial Bonds under the Indenture. The Authority hereby certifies that the requirements set forth herein and in Section 2.14 of the General Indenture have been and will be complied with in connection with the issuance of the Series 2016 Bonds.

ARTICLE III

FUNDS AND ACCOUNTS

Section 3.1. Creation of Series 2016 Accounts. There is hereby established with the Trustee a Series 2016 Account Cost of Issuance Account and Series 2016 Accounts within the Construction Fund and the Debt Service Reserve Fund.

Section 3.2. Disbursement of Series 2016 Bond Proceeds. The Authority shall deposit with the Trustee the proceeds from the sale of the Series 2016 Bonds in the amount of $_____, (being the par amount of the Series 2016 Bonds, [plus/less] a net reoffering [premium/discount] of $_____, and less an Underwriter's discount of $_____), [together with _____ transferred from the Refunded Bonds debt service reserve account, and less a bond insurance premium of $_____, a debt service reserve insurance premium of $_____, all to be paid by the Underwriter on behalf of the Authority) (for a net amount of $_____)] and the Trustee shall transfer and deposit such amounts as follows:

(a) $_____ shall be deposited with the Escrow Agent, sufficient, together with investment earnings thereon, to pay principal and interest on and to redeem the Refunded Bonds as described in the Escrow Agreement;

(b) In the Series 2016 Construction Account, the amount of $_____ from proceeds of the Series 2016 Bonds to acquire the Fire Station Projects;

(c) [$_____ into the Series 2016 Account in the Debt Service Reserve Fund to satisfy the Debt Service Reserve Requirement with respect to the Series 2016 Bonds; and]

(d) The remaining amount into the Series 2016 Cost of Issuance Account held by the Trustee to be used to pay costs of issuance of the Series 2016 Bonds.

Section 3.3. Costs of Issuance Account; Payment of Costs of Issuing Series 2016 Bonds. An amount equal to $_____ of the proceeds of the Series 2016 Bonds shall be deposited to a Series 2016 Cost of Issuance Account. At or about the time of the issuance of the Series 2016 Bonds the Trustee shall apply the amounts on deposit in the Series 2016 Cost of Issuance Account to pay costs of issuing the Series 2016 Bonds, as instructed in the costs of issuance disbursement in substantially the form of Exhibit C attached hereto to be signed by the Chair/President of the Authority or other authorized officer of the Authority or City. Any amounts remaining in the Series 2016 Cost of Issuance Account 90 days after the delivery of the Series 2016 Bonds shall be transferred to the Series 2016 Account of the Construction Fund and applied to the uses therein authorized.

Section 3.4. Deposit to and Use of Series 2016 Account of Construction Fund. The amounts on deposit in the Series 2016 Account of the Construction Fund shall be disbursed by the Trustee for the purpose for which the Series 2016 Bonds were issued

(including any capitalized interest thereon) in accordance with the provisions of the Master Lease and the Indenture. Upon completion of the 2016 Project, as evidenced by delivery of a completion certificate, amounts remaining on deposit in the Series 2016 Account of the Construction Fund shall be applied to the redemption of Series 2016 Bonds as soon as practicable.

Other than any amounts for capitalized interest on the Series 2016 Bonds which shall be disbursed without further direction as the same becomes due and payable, no amounts shall be disbursed from the Series 2016 Account of the Construction Fund for payment of Contractors with respect to the related facility comprising the 2016 Project until reasonable evidence of the related Construction Contract (meeting the requirements of the Master Lease), related payment and performance bonds, and other insurance requirements under the Master Lease have been delivered to the Trustee.

Section 3.5. Series 2016 Debt Service Reserve Account. [The Debt Service Reserve Requirement shall be fully funded by the [Series 2016 Reserve Instrument/ a deposit of proceeds of the Series 2016 Bonds]. Thereafter, the Authority shall replenish the Debt Service Reserve Fund as provided in the General Indenture.]

ARTICLE IV

ADD PROVISIONS RELATING TO INSURANCE POLICY, THE SERIES 2016 RESERVE INSTRUMENT AND THE INSURER, IF USED]

ARTICLE V

CONFIRMATION OF GENERAL INDENTURE

Section 5.1. Confirmation of General Indenture. As supplemented by this First Supplemental Indenture, and except as provided herein, the General Indenture is in all respects ratified and confirmed, and the General Indenture and this First Supplemental Indenture shall be read, taken and construed as one and the same instrument so that all of the rights, remedies, terms, conditions, covenants and agreements of the General Indenture shall apply and remain in full force and effect with respect to this First Supplemental Indenture, and to any revenues, receipts and moneys to be derived therefrom.

ARTICLE VI

MISCELLANEOUS

Section 6.1. Confirmation of Sale of Series 2016 Bonds. The sale of the Series 2016 Bonds to the Underwriter at a price of $_____, is hereby ratified, confirmed and approved.

Section 6.2. Illegal, etc. Provisions Disregarded. In case any provision in this First Supplemental Indenture shall for any reason be held invalid, illegal, or unenforceable in any respect, this First Supplemental Indenture shall be construed as if such provision had never been contained herein.

Section 6.3. Applicable Law. This First Supplemental Indenture shall be governed by and construed in accordance with the laws of the State of Utah.

Section 6.4. Headings for Convenience Only. The descriptive headings in this First Supplemental Indenture are inserted for convenience only and shall not control or affect the meaning or construction of any of the provisions hereof.

Section 6.5. Counterparts. This First Supplemental Indenture may be executed in any number of counterparts, each of which shall be deemed an original and all of which, when so executed and delivered, shall constitute but one and the same instrument.

Section 6.6. First Supplemental Indenture Construed with General Indenture. All of the provisions of this First Supplemental Indenture supplement and amend the General Indenture, and shall be deemed to be, and shall be construed as, part of the General Indenture to the same extent as if fully set forth therein.

IN WITNESS WHEREOF, the Authority and the Trustee have caused this First Supplemental Indenture of Trust to be executed as of the date first written above.

MUNICIPAL BUILDING AUTHORITY
OF WEST VALLEY CITY, UTAH

(SEAL)

By:_____
Chair/President

COUNTERSIGN:

By:_____
Secretary-Treasurer

_____,
as Trustee

By:_____

Title:_____

EXHIBIT A

FORM OF SERIES 2016 BONDS

Unless this certificate is presented by an authorized representative of The Depository Trust Company (55 Water Street, New York, New York) to the issuer or its agent for registration of transfer, exchange or payment, and any certificate issued is registered in the name of Cede & Co. or such other name as requested by an authorized representative of The Depository Trust Company and any payment is made to Cede & Co., ANY TRANSFER, PLEDGE OR OTHER USE HEREOF FOR VALUE OR OTHERWISE BY OR TO ANY PERSON IS WRONGFUL since the registered owner hereof, Cede & Co., has an interest herein.

UNITED STATES OF AMERICA
STATE OF UTAH
MUNICIPAL BUILDING AUTHORITY
OF WEST VALLEY CITY, UTAH
LEASE REVENUE AND REFUNDING BOND, SERIES 2016

REGISTERED NUMBER R-___ REGISTERED $_____

Interest Rate	Maturity Date	Original Issue Date	CUSIP
%		_____, 2016	

REGISTERED OWNER: CEDE & CO.

PRINCIPAL AMOUNT: _____AND NO/100 DOLLARS****

The Municipal Building Authority of West Valley City, Utah, a nonprofit corporation duly organized and existing under the laws of the State of Utah (the "Authority"), performing essential governmental functions on behalf of West Valley City, Utah, a body corporate and politic of the State of Utah (the "City") for value received, promises to pay solely and to the extent available from the sources hereinafter provided, to the Registered Owner named above, or registered assigns, on the Maturity Date specified above, the Principal Amount specified above, and in like manner to pay interest on said amount at the Interest Rate specified above (calculated on the basis of a 360-day year consisting of twelve 30-day months), payable on _____ and _____ of each year (each an "Interest Payment Date") commencing _____, 2016, except as the provisions hereinafter set forth with respect to

redemption of this Bond prior to maturity may become applicable hereto. The principal amount of and premium, if any, on this Bond are payable in lawful money of the United States of America, upon surrender of this Bond for cancellation at the principal corporate trust office of _____ in Salt Lake City, Utah, or such other office as designated for such purpose, or its successor (the "Paying Agent") and the interest hereon is payable in lawful money of the United States by check or draft mailed to the Registered Owner of record as of the fifteenth day next preceding each Interest Payment Date or to owners of $1,000,000 or more in aggregate principal amount of Bonds (or owners of 100% of any Series then Outstanding) by wire transfer to a bank account within the United States designated by the Registered Owner in written instructions furnished to the Trustee.

The Series 2016 Bonds are dated as of the Original Issue Date shown above. Interest on the Series 2016 Bonds authenticated prior to the first Interest Payment Date shall accrue from the Original Issue Date. Interest on the Series 2016 Bonds authenticated on or subsequent to the first Interest Payment Date shall accrue from the Interest Payment Date next preceding their date of authentication, or if authenticated on an Interest Payment Date, from that date; provided, however, that if interest on the Series 2016 Bonds shall be in default, interest on the Series 2016 Bonds issued in exchange for Series 2016 Bonds surrendered for transfer or exchange shall accrue from the date to which interest has been paid in full on the Series 2016 Bonds surrendered or if no interest has been paid, from the Original Issue Date.

This Bond is one of an authorized issue of Lease Revenue and Refunding Bonds Series 2016, of the Authority limited in aggregate principal amount to $_____ (the "Series 2016 Bonds") issued to (a) finance the acquisition and construction of a new fire station and the remodeling of an existing fire station and, related improvements (the "Fire Station Projects") (b) refinance the Maverik Center (the "Maverik Center Project" and together with the Fire Station Projects, the "2016 Project"), by refunding the Authority's outstanding lease revenue bonds relating to the Maverik Center Project (the "Refunded Bonds") (c) fund a debt service reserve fund, if necessary and (d) pay costs of issuance of the Series 2016 Bonds. The 2016 Project will be leased by the Authority to the City under the terms of a Master Lease Agreement dated as of [June 1], 2016 (which agreement, as from time to time amended and supplemented, is hereinafter referred to as the "Master Lease"). The obligation of the City to make lease payments under the Master Lease is subject to the annual renewal of the Master Lease and to the right of the City to terminate its payment obligations with respect to the 2016 Project under the Master Lease in the event that the City fails to appropriate moneys to pay such Base Rentals and Additional Rentals. In the event that the City's payment obligations under the Master Lease shall be terminated by reason of a failure to appropriate (referred to herein as "Event of Nonappropriation") or by reason of an Event of Default (as defined in the Master Lease), the principal amount of this Bond and interest hereon will be payable from such moneys, if any, as may be available under the Indenture for such purpose, including any moneys received by the Trustee from a liquidation or other disposition of the Authority's interest in the 2016 Project including a foreclosure of the lien of the Indenture and the Security Documents, subject to the limitations contained in the Indenture. Under certain circumstances, this Bond and the interest hereon may also be

payable from Net Proceeds (as defined in the Master Lease) of insurance policies, performance bonds, condemnation awards and liquidation proceeds with respect to the 2016 Project.

The Series 2016 Bonds are issued pursuant to the authority contained in the Local Building Authority Act, Title 17D, Chapter 2, Utah Code Annotated 1953, as amended, the Local Government Bonding Act, Title 11, Chapter 14, Utah Code Annotated 1953, as amended and the Utah Refunding Bond Act, Title 11, Chapter 27, Utah Code Annotated 1953, as amended (collectively, the "Act"), and under and are equally and ratably secured by and entitled to the protection of a General Indenture of Trust dated as of [June 1], 2016 (the "General Indenture") and a First Supplemental Indenture dated as of [June 1], 2016 (the "First Supplemental Indenture," and together with the General Indenture, the "Indenture"), each by and between the Authority and the Trustee, duly executed and delivered by the Authority to the Trustee and pursuant to which the Base Rentals (as defined in the Master Lease) payable by the City, under the Master Lease and, if paid by the City, the Purchase Option Price, are assigned to the Trustee to secure the payment of principal of, premium, if any, and interest on the Series 2016 Bonds. Additionally, the Authority has granted a security interest in the 2016 Project, pursuant to certain Security Documents (as defined in the First Supplemental Indenture) to the Trustee to further secure its obligations under the Indenture.

The Indenture provides that, upon the conditions and restrictions therein, the Authority may hereafter issue Refunding Bonds (the "Refunding Bonds") or Additional Bonds (the "Additional Bonds") from time to time to finance or refinance the costs of the 2016 Project or other facilities and improvements under certain terms and conditions contained in the Indenture and in the Master Lease and, if issued, the Refunding Bonds and/or the Additional Bonds will rank pari passu with the Series 2016 Bonds then Outstanding (as defined in the Indenture) and be equally and ratably secured and entitled to the protection of the Indenture and the Security Documents (the Series 2016 Bonds, the Refunding Bonds and the Additional Bonds are collectively referred to herein as the "Bonds"). Reference is hereby made to the Master Lease, the Security Documents and the Indenture for a description of the property pledged and assigned, the provisions, among others, with respect to the nature and extent of the security, the rights, duties and obligations of the City, the Authority, the Trustee and the holders of the Series 2016 Bonds, the issuance of Refunding Bonds or Additional Bonds, the terms upon which the Series 2016 Bonds are issued and secured, the terms and conditions upon which the Series 2016 Bonds will be deemed to have been paid, at or prior to maturity or redemption of the Series 2016 Bonds, and the rights of the holders of the Series 2016 Bonds upon the occurrence of an Event of Default or an Event of Nonappropriation.

The Series 2016 Bonds and the interest thereon constitute special, limited obligations of the Authority. Except to the extent payable from the proceeds of the Series 2016 Bonds and the income from the investment thereof, the proceeds of certain funds held by the Trustee, the Net Proceeds of certain insurance policies, performance bonds and condemnation awards or the proceeds, if any, from a liquidation or other disposition of the Authority's interest in the 2016 Project subsequent to foreclosure of the lien of the Indenture and the Security Documents, the Series 2016 Bonds and the interest thereon are

payable solely from Base Rentals, and, if paid, the Purchase Option Price paid by the City under the Master Lease. Payments under the Master Lease may be made only from City Funds (as defined in the Master Lease) which are legally available for such purpose.

Neither the Master Lease, the Series 2016 Bonds nor the interest thereon shall constitute or give rise to a general obligation indebtedness of the City, or a charge against the City or its general credit or the taxing power of the City. Neither the City nor the Authority on its behalf, has pledged the credit of the City to the payment of the Series 2016 Bonds, the interest thereon or amounts due or to become due under the Master Lease. The Authority has no taxing power.

THE CITY IS NOT OBLIGATED TO APPROPRIATE CITY FUNDS FOR THE PURPOSE OF PAYING BASE RENTALS, ADDITIONAL RENTALS OR THE PURCHASE OPTION PRICE UNDER THE MASTER LEASE, AND NO JUDGMENT MAY BE ENTERED AGAINST THE CITY IN THE EVENT OF AN INSUFFICIENCY OF MONEYS TO PAY THE PRINCIPAL OF, PREMIUM, IF ANY, AND INTEREST ON THE SERIES 2016 BONDS. THE MASTER LEASE IS SUBJECT TO ANNUAL RENEWAL AND THE CITY'S PAYMENT OBLIGATIONS UNDER THE MASTER LEASE WILL BE TERMINATED UPON THE OCCURRENCE OF AN EVENT OF DEFAULT. IN SUCH EVENT, ALL PAYMENTS FROM THE CITY UNDER THE MASTER LEASE WILL TERMINATE AND THE SERIES 2016 BONDS AND THE INTEREST THEREON WILL BE PAYABLE SOLELY FROM AND TO THE EXTENT OF SUCH MONEYS, IF ANY, AS MAY BE HELD BY THE TRUSTEE UNDER THE INDENTURE AND ANY MONEYS MADE AVAILABLE FROM A LIQUIDATION OR OTHER DISPOSITION OF THE AUTHORITY'S INTEREST IN THE 2016 PROJECT SUBSEQUENT TO FORECLOSURE OF THE LIEN OF THE INDENTURE AND THE SECURITY DOCUMENTS, SUBJECT TO THE LIMITATIONS SET FORTH IN THE INDENTURE. A BONDHOLDER SHOULD NOT ANTICIPATE THAT IT WILL BE POSSIBLE TO FORECLOSE THE AUTHORITY'S INTEREST IN THE 2016 PROJECT AND LIQUIDATE, RELET OR SELL SUCH INTEREST AFTER THE OCCURRENCE OF AN EVENT OF DEFAULT FOR AN AMOUNT EQUAL TO THE AGGREGATE PRINCIPAL AMOUNT OF THE SERIES 2016 BONDS THEN OUTSTANDING PLUS ACCRUED INTEREST THEREON.

No deficiency judgment upon foreclosure may be entered against the City or the Authority and no breach of any provision of the Master Lease, the Security Documents, the Series 2016 Bonds or the Indenture shall impose any general obligation or liability upon or a charge against the City, the Authority, or the general credit or taxing powers of the City.

This Bond is transferable by the Registered Owner hereof in person or by its attorney duly authorized in writing at the principal corporate trust office of the Trustee in Salt Lake City, Utah, but only in the manner, subject to the limitations and upon payment of the charges provided in the Indenture, and upon surrender and cancellation of this Bond. Upon such transfer a new registered Bond or Bonds of the same series and the

same maturity and of authorized denomination or denominations for the same aggregate principal amount will be issued to the transferee in exchange therefor.

The Authority, the Paying Agent and the Trustee may deem and treat the Registered Owner hereof as the absolute owner hereof (whether or not this Bond shall be overdue) for the purpose of receiving payment of or on account of principal hereof and premium, if any, and interest due hereon and for all other purposes and the Authority, the Paying Agent and the Trustee shall not be affected by any notice to the contrary.

The Series 2016 Bonds are subject to redemption prior to maturity only at the times, upon the occurrence of the events and with notice all as found in the Indenture.

In the event of a redemption, acceleration, or any other similar transaction necessitating a reduction in aggregate principal amount of the Series 2016 Bonds, including any mandatory sinking fund redemption, a Bondholder shall make an appropriate notation on the Series 2016 Bonds certificate indicating the date and amounts of such reduction in principal, except in the case of final maturity in which case the certificate must be presented to the Paying Agent prior to payment. In the case of a discrepancy between the record of payments on the Series 2016 Bonds and the Bond Registrar's records, the Bond Registrar's records shall govern.

The Registered Owner of this Series 2016 Bond shall have no right to enforce the provisions of the Indenture or to institute action to enforce the covenants therein, or to take any action with respect to any Event of Default under the Master Lease or any Event of Default under the Indenture or the Security Documents, or to institute, appear in or defend any suit or other proceedings with respect thereto, except as provided in the Indenture.

The Indenture permits, with certain exceptions as therein provided, the amendment thereof and the modification of the rights and obligations of the Authority and the rights of the holders of the Bonds at any time by the Authority with the consent of the City (if an Event of Default does not then exist under the Master Lease) and the Registered Owners of not less than 66 2/3% in aggregate principal amount of the Bonds at the time Outstanding. The Indenture also permits waiver of compliance by the Authority with any terms of the Indenture with the consent of the City (if an Event of Default does not then exist under the Master Lease) and the Registered Owners of not less than 66 2/3% in aggregate principal amount of the Bonds at the time Outstanding. Any such consent or waiver by the Registered Owner of this Bond shall be conclusive and binding upon such Owner and upon all future holders of this Bond and of any Bond issued upon the transfer or exchange of this Bond whether or not notation of such consent or waiver is made upon this Bond. The Indenture also contains provisions permitting the Trustee to waive certain Events of Default under the Indenture and their consequences. The Indenture requires the written consent of the Trustee to any waiver or amendment of any provision of the Indenture or any supplemental indenture which modifies the rights, duties or immunities of the Trustee.

It is hereby certified, recited and declared that all acts, conditions and things required to exist, happen and be performed precedent to and in the execution and delivery of the Indenture and the issuance of this Bond do exist, have happened and have been performed in due time, form and manner as required by law; that the issuance of this Bond and the issue of which it forms a part, together with all other obligations of the Authority, do not exceed or violate any constitutional or statutory debt limitation. As required by the Act, the City has by resolution authorized the Authority to issue the Series 2016 Bonds and to execute and deliver the Master Lease, the Security Documents and the Indenture.

This Series 2016 Bond shall not be valid or become obligatory for any purpose or be entitled to any security or benefit under the Indenture until the Certificate of Authentication hereon shall have been signed by the Trustee.

IN WITNESS WHEREOF, the Authority has caused this Series 2016 Bond to be executed in its name by the facsimile or manual signature of its Chair/President and its corporate seal to be hereunto impressed or imprinted hereon and attested by the manual or facsimile signature of its Secretary-Treasurer, and said officials do by the execution hereof adopt as and for the respective proper signatures their respective facsimile or manual signatures appearing hereon.

MUNICIPAL BUILDING AUTHORITY
OF WEST VALLEY CITY, UTAH

(SEAL)

By:_____
Chair/President

ATTEST AND COUNTERSIGN:

By:_____
Secretary-Treasurer

CERTIFICATE OF AUTHENTICATION

This Bond is one of the Series 2016 Bonds of the issue described in the within-mentioned First Supplemental Indenture of Trust.

_____,
as Trustee

By:_____
Authorized Officer

Date of Authentication: _____

ASSIGNMENT

FOR VALUE RECEIVED, _____, the undersigned, hereby sells, assigns and transfers unto:

_____

(Social Security or Other Identifying Number of Assignee)

_____

(Please Print or Typewrite Name and Address of Assignee)

the within Bond and all rights thereunder, and hereby irrevocably constitutes and appoints _____ attorney to transfer the within Bond on the books kept for registration thereof, with full power of substitution in the premises.

DATED:_____

Signature_____

NOTICE: The signature to this assignment must correspond with the name as it appears upon the face of the within Bond in every particular, without alteration or enlargement or any change whatever.

Signature Guaranteed:

_____

NOTICE: Signature(s) must be guaranteed by an "eligible guarantor institution" that is a member of or a participant in a "signature guarantee program" (e.g., the Securities Transfer Agents Medallion Program, the Stock Exchange Medallion Program or the New York Stock Exchange, Inc. Medallion Signature Program).

EXHIBIT B

COST OF ISSUANCE DISBURSEMENT REQUEST

_____
_____
Salt Lake City, Utah 84___

Pursuant to Section 3.3 of the First Supplemental Indenture of Trust dated as of _____, 2016, you are hereby authorized to pay to the following costs of issuance from the Series 2016 Costs of Issuance Account:

[See Attached Schedule]

MUNICIPAL BUILDING AUTHORITY
OF WEST VALLEY CITY, UTAH

By:_____
Chair/President

COSTS OF ISSUANCE

Payee	Purpose	Amount

GENERAL INDENTURE OF TRUST

Dated as of [June 1], 2016

between

MUNICIPAL BUILDING AUTHORITY
OF WEST VALLEY CITY, UTAH

and

_____,
as Trustee

Municipal Building Authority
of West Valley City, Utah
Lease Revenue Bonds

Table of Contents

Page

ARTICLE I DEFINITIONS 5

Section 1.1. Definitions.....5
Section 1.2. Indenture to Constitute Contract.....11
Section 1.3. Construction.....11

ARTICLE II TERMS AND PROVISIONS OF BONDS; ADDITIONAL BONDS AND REFUNDING BONDS 13

Section 2.1. Authorization of Bonds.....13
Section 2.2. Description of Bonds; Payment. 13
Section 2.3. Execution; Limited Obligation 14
Section 2.4. Authentication and Delivery of Bonds. 15
Section 2.5. Form of Bonds 17
Section 2.6. Mutilated, Lost, Stolen or Destroyed Bonds.....18
Section 2.7. Registration and Exchange of Bonds; Persons Treated as Owners 18
Section 2.8. Designation of the Trustee as Bond Registrar and Paying Agent and Designation of Any Additional Paying Agents.....19
Section 2.9. Cancellation 19
Section 2.10. Nonpresentation of Bonds.....19
Section 2.11. Initial Bonds.....20
Section 2.12. Temporary Bonds.....20
Section 2.13. Issuance of Refunding Bonds 21
Section 2.14. Additional Bonds 22

ARTICLE III REDEMPTION PROVISIONS 25

Section 3.1. Redemption.....25
Section 3.2. Extraordinary Redemption.....25
Section 3.3. Other Redemption Provisions.....25
Section 3.4. Notice of Redemption. 26
Section 3.5. Redemption Payments 27
Section 3.6. Cancellation 28
Section 3.7. Partial Redemption of Bonds.....28

ARTICLE IV GENERAL COVENANTS.....29

Section 4.1. Payment of Principal and Premium, if any, and Interest 29
Section 4.2. Performance of Covenants; Due Authority.....29
Section 4.3. Ownership; Instruments of Further Assurance 29
Section 4.4. Perfection of Security Interest 30
Section 4.5. Inspection of Project Books.....30
Section 4.6. List of Bondholders.....30

Section 4.7. Rights Under Master Lease 30
Section 4.8. Payment of Taxes, Charges, Insurance, etc 31
Section 4.9. Maintenance and Repair 31
Section 4.10. Warranty 31
Section 4.11. Further Assurances 31
Section 4.12. Actions with Respect to Trust Estate 32
Section 4.13. Power of Attorney in Respect of the Master Lease 32

ARTICLE V REVENUES AND FUNDS 33

Section 5.1. Source of Payment of Bonds 33
Section 5.2. Creation of Bond Fund 33
Section 5.3. Creation of Sinking Fund Account 33
Section 5.4. Creation of Debt Service Reserve Fund 33
Section 5.5. Creation of Construction Fund 33
Section 5.6. Creation of Rebate Fund 34
Section 5.7. Creation of Funds 34
Section 5.8. Use of Bond Fund. 34
Section 5.9. Use of Sinking Fund Account. 34
Section 5.10. Use of Debt Service Reserve Fund 35
Section 5.11. Use of Construction Fund; Disbursements. 37
Section 5.12. Completion of Project 37
Section 5.13. Rebate Fund and Arbitrage Rebate. 37
Section 5.14. Moneys to be Held in Trust 39
Section 5.15. Repayment to the City from Bond Fund or Debt Service Reserve Fund 39
Section 5.16. Custody of Separate Trust Fund 39
Section 5.17. Cost of Issuance Account 39
Section 5.18. Creation of Reserve Instrument Fund 39
Section 5.19. Use of Reserve Instrument Fund 40

ARTICLE VI INVESTMENT OF MONEYS 41

Section 6.1. Trustee to Invest Funds 41
Section 6.2. Method of Valuation and Frequency of Valuation 41

ARTICLE VII RIGHTS OF THE CITY 42

Section 7.1. Subordination of Master Lease to Indenture; Certain Rights to City 42
Section 7.2. Granting of Rights in and to the Projects 42
Section 7.3. Release of Equipment Forming a Part of the Projects 42
Section 7.4. Release of Portions of Project Upon Payment of Related Series of Bonds 42

ARTICLE VIII DISCHARGE OF LIEN 44

ARTICLE IX DEFAULT PROVISIONS AND REMEDIES OF THE TRUSTEE AND BONDHOLDERS 46

Section 9.1. Events of Default 46
Section 9.2. Acceleration, Limitation on Remedies 47
Section 9.3. Surrender of Possession of Projects; Rights and Duties of Trustee in Possession 48
Section 9.4. Other Remedies; Rights of Bondholders 49
Section 9.5. Right of Bondholders to Direct Proceedings 50
Section 9.6. Appointment of Receivers 50
Section 9.7. Waiver 50
Section 9.8. Application of Moneys 51
Section 9.9. Remedies Vested in the Trustee 52
Section 9.10. Rights and Remedies of Bondholders 53
Section 9.11. Termination of Proceedings 53
Section 9.12. Waivers of Events of Default 53
Section 9.13. Notice of Events of Default under Section 9.1(c); Opportunity of the Authority and the City to Cure Such Events of Default 54
Section 9.14. Cooperation of Authority 54
Section 9.15. Limitation on Remedies and Acceleration During Acquisition and Construction of Portions of Projects 55

ARTICLE X THE TRUSTEE 56

Section 10.1. Acceptance of Trusts 56
Section 10.2. Fees, Charges and Expenses of the Trustee 59
Section 10.3. Notice to Bondholders 59
Section 10.4. Intervention by the Trustee 59
Section 10.5. Successor Trustee 59
Section 10.6. Resignation by the Trustee 60
Section 10.7. Removal of the Trustee 60
Section 10.8. Appointment of Successor Trustee 60
Section 10.9. Concerning Any Successor Trustee 60
Section 10.10. Right of the Trustee to Pay Taxes and Other Charges 61
Section 10.11. Appointment of Co-Trustee 61
Section 10.12. Trustee Not Responsible for Actions of Authority 62
Section 10.13. Trustee's Right to Own and Deal in Bonds 62
Section 10.14. Requirements as to Trustee's Records 62
Section 10.15. Trustee's Own Funds 63
Section 10.16. Direct Payment Authorization 63

ARTICLE XI SUPPLEMENTAL INDENTURES 65

Section 11.1. Supplemental Indentures Not Requiring Consent of Bondholders 65
Section 11.2. Supplemental Indentures Requiring Consent of Bondholders 65

ARTICLE XII AMENDMENT OF MASTER LEASE 67

Section 12.1. Amendments, etc., to Master Lease Not Requiring Consent of Bondholders 67
Section 12.2. Amendments, etc., to the Master Lease Requiring Consent of Holders of the Bonds 67

ARTICLE XIII MISCELLANEOUS 68

Section 13.1. Consents, etc. of Bondholders 68
Section 13.2. Limitation of Rights 68
Section 13.3. Severability 68
Section 13.4. Notices 68
Section 13.5. Payments Due on Days other than Business Days 69
Section 13.6. Counterparts 69
Section 13.7. Applicable Provisions of Law 69

GENERAL INDENTURE OF TRUST

THIS GENERAL INDENTURE OF TRUST dated as of [June 1], 2016 (the "General Indenture"), between the MUNICIPAL BUILDING AUTHORITY OF WEST VALLEY CITY, UTAH, a nonprofit corporation duly organized and existing under the laws of the State of Utah (the "Authority"), and _____, a national banking association organized under the laws of the United States with its principal office located in Salt Lake City, Utah as trustee (the "Trustee"):

W I T N E S S E T H:

WHEREAS, the City Council (the "Council") of West Valley City, Utah (the "City") has organized the Authority solely for the purpose of (a) accomplishing the public purposes for which the City exists by acquiring, constructing, improving or extending any improvements, facilities or properties (whether real or personal) and appurtenances to them which the City is authorized or permitted by law to acquire, including, but not limited to, public buildings or other structures of every nature or any joint or partial interest in the same, which improvements, facilities, properties and appurtenances need not be situated within the boundaries of the City (collectively, the "Projects") and (b) financing or refinancing the costs of such Projects on behalf of the City in accordance with the procedures and subject to the limitations of the Local Building Authority Act, Title 17D, Chapter 2, Utah Code Annotated 1953, as amended, the Local Government Bonding Act, Title 11, Chapter 14, Utah Code Annotated 1953, as amended, and the Utah Refunding Bond Act, Title 11, Chapter 27, Utah Code Annotated 1953, as amended (collectively, the "Act"), including, but not limited to, the costs of refunding and retiring existing obligations, funding debt service reserves, and paying issuance expenses to be incurred in connection with the issuance and sale of the Bonds herein authorized and defined; and

WHEREAS, the Act provides that the Authority may issue and sell its Bonds for the purposes described above; and

WHEREAS, the Bonds shall be secured by a pledge and assignment of certain base rentals (the "Base Rentals") received by the Authority under that certain Master Lease Agreement dated as of even date herewith between the Authority, as lessor, and the City, as lessee (the "Master Lease"), and a purchase option price (the "Purchase Option Price"), if paid by the City, with respect to a Project under the Master Lease and will be further secured by the Security Documents (as defined herein); and

WHEREAS, pursuant to the Master Lease, the Authority has agreed to acquire, construct, improve and equip one or more Projects and to lease the same to the City upon the terms and conditions set forth in the Master Lease; and

WHEREAS, pursuant to the provisions of a resolution of the City adopted on May 10, 2016 (the "City Resolution"), the City has authorized and approved the execution of the Master Lease and has authorized and approved certain actions to be taken by the Authority in connection with the financing of the acquisition, construction, improvement

and equipping (as applicable) of a Project or Projects, including, among other things, the execution, delivery and performance of this General Indenture and the issuance of the Bonds hereunder; and

WHEREAS, pursuant to the provisions of a resolution of the Authority adopted on May 10, 2016 (the "Authority Resolution"), the governing board of the Authority (the "Governing Board") has authorized, approved and directed the execution of the Master Lease and this General Indenture and has authorized and approved certain actions to be taken by the Authority in connection with the financing of the acquisition, construction, improvement and equipping (as applicable) of a Project or Projects, including the issuance of the Bonds hereunder; and

WHEREAS, the Authority has determined that the Bonds shall be secured by this Indenture (as hereinafter defined) and as provided herein and has ascertained and determined that the provisions herein contained for protecting and enforcing the rights and remedies of the registered owners of such Bonds are reasonable, proper and in accordance with law, and that this Indenture is necessary to the performance of its duties and the execution of its powers under law, and does deem and determine all of the provisions herein contained to be reasonable and proper for the security of the registered owners of the Bonds; and

WHEREAS, all acts and things required by law and by the Articles of Incorporation and Bylaws of the Authority necessary to make this Indenture a valid and binding trust instrument for the security of all Bonds duly issued hereunder have been done and performed and the execution and delivery of this Indenture have been in all respects duly authorized; and

WHEREAS, the Trustee has accepted the trust created and established by this Indenture and in evidence thereof has joined in the execution hereof.

NOW, THEREFORE, THIS GENERAL INDENTURE OF TRUST WITNESSETH:

GRANTING CLAUSES

That the Authority, in consideration of the premises and the acceptance of the Trustee of the trusts hereby created and of the purchase and acceptance of the Bonds by the Bondholders thereof, and of the sum of One Dollar, lawful money of the United States of America, to it duly paid by the Trustee at or before the execution and delivery of these presents, and for other good and valuable consideration, the receipt of which is hereby acknowledged, in order to secure the payment of the principal of and premium, if any, and interest on the Bonds according to their tenor and effect and to secure the performance and observance by the Authority of all the covenants expressed or implied herein and in the Bonds, does hereby grant, bargain, sell, convey, assign and pledge, and does hereby grant a security interest in, the following properties, rights, interests and privileges (collectively, the "Trust Estate") to the Trustee, and its successors in trust and

assigns forever, for the securing of the performance of the obligations of the Authority hereinafter set forth:

GRANTING CLAUSE FIRST

The Authority's interest in the Projects, and any other interest, easements, licenses, rights and interests in real property hereafter acquired by the Authority for use in connection with the Projects, together with all additions thereto and substitutions thereof, subject to the Permitted Encumbrances.

GRANTING CLAUSE SECOND

The improvements made as part or all of the Projects and all substitutions or replacements thereof and in general all property acquired by the Authority with the proceeds of the Bonds issued under and secured by this Indenture and substitutions and replacements thereof and any other property which under the terms of the Master Lease is to become the property of the Authority or be subjected to the lien of this Indenture or the Security Documents, subject to Permitted Encumbrances.

GRANTING CLAUSE THIRD

The equipment constituting a part of the Projects and any other interest in personal property hereafter acquired by the Authority for use in connection with the Projects, together with all additions thereto and replacements, renewals and substitutions therefor.

GRANTING CLAUSE FOURTH

The Master Lease, including all extensions and renewals of the term thereof, if any, the present and continuing right to make claim for, collect, receive and receipt for any of the Base Rentals, Additional Rentals, Purchase Option Price, if paid by the City, as applicable, with respect to a Project or Projects, sums, amounts, income, revenues, issues and profits and any other sums of money payable or receivable under the Master Lease with respect to the Projects for deposit with the Trustee under this Indenture (except for amounts payable under Sections 6.3(d), 6.3(j), 13.3 and 14.5 thereof), to bring actions and proceedings thereunder or for the enforcement thereof, and to do any and all things which the Authority under the Master Lease or any lessor under the Master Lease is or may become entitled to.

GRANTING CLAUSE FIFTH

All moneys and securities from time to time held by the Trustee under the terms of this Indenture (except for moneys deposited with or paid to the Trustee for the payment of Bonds not then deemed Outstanding under the Indenture) and any and all other real or personal property of every name and nature from time to time hereafter by delivery or by writing of any kind conveyed, mortgaged, pledged, assigned or transferred, as and for additional security hereunder by the Authority or by anyone on its behalf, or with its written consent, to the Trustee which is hereby authorized to receive any and all

such property at any and all times and to hold and apply the same subject to the terms thereof.

TO HAVE AND TO HOLD all and singular the Trust Estate, whether now owned or hereafter acquired, unto Trustee and its respective successors in said Trust and assigns forever;

IN TRUST NEVERTHELESS, upon the terms, conditions and trusts herein set forth for the equal and proportionate benefit, security and protection of all present and future Bondholders of the Bonds, from time to time, issued under and secured by this Indenture without privilege, priority or distinction as to the lien or otherwise of any of the Bonds over any of the other Bonds, except as expressly provided therein and second, for the equal and proportionate benefit, security and protection of all Reserve Instrument Providers;

PROVIDED, HOWEVER, that if the Authority, its successors or assigns shall well and truly pay, or cause to be paid, the principal of and premium (including any make-whole additional payments), if any, and interest on the Bonds due or to become due thereon, at the times and in the manner mentioned in the Bonds and all Reserve Instrument Repayment Obligations according to the true intent and meaning thereof, and shall cause the payments to be made on the Bonds as required under Article IV hereof, or shall provide, as permitted hereby, for the payment thereof by depositing with the Trustee the entire amount due or to become due thereon (as provided in Article VIII hereof), and shall well and truly cause to be kept, performed and observed all of its covenants and conditions pursuant to the terms of this Indenture, and shall pay or cause to be paid to the Trustee all sums of money due or to become due to it in accordance with the terms and provisions hereof, then upon the final payment thereof this Indenture and the rights hereby granted shall cease, terminate and be void; otherwise this Indenture shall be and remain in full force and effect.

THIS GENERAL INDENTURE OF TRUST FURTHER WITNESSETH, and it is expressly declared, that all Bonds issued and secured hereunder are to be issued, authenticated and delivered and all said property, rights and interests, including, without limitation, the Base Rentals, Additional Rentals, Purchase Option Price, if paid by the City, with respect to a Project or Projects and other amounts hereby assigned and pledged are to be dealt with and disposed of under, upon and subject to the terms, conditions, stipulations, covenants, agreements, trusts, uses and purposes as herein expressed, and the Authority has agreed and covenanted, and does hereby agree and covenant with Trustee and with the respective Bondholders as follows (subject, however, to the provisions of Section 2.3 hereof):

ARTICLE I

DEFINITIONS

Section 1.1. Definitions. All terms defined in Article I of the Master Lease shall have the same meaning in the Indenture unless otherwise indicated. In addition, unless the context otherwise requires, the terms defined in the recitals to this General Indenture set forth above and in this Article I shall, for all purposes of the Indenture and the Master Lease, have the meaning herein specified.

"Additional Bonds" means all Bonds (other than the Initial Bonds) issued under the Indenture pursuant to Section 2.14 hereof.

"Authority Representative" means the Chair/President and Secretary-Treasurer of the Authority, and any other person or persons at any time designated to act on behalf of the Authority for purposes of performing any act on behalf of the Authority with respect to a Project by a written certificate furnished to the City and the Trustee containing the specimen signature of such person or persons and signed on behalf of the Authority by any duly authorized officer of the Authority. Such certificate may designate an alternate or alternates. The Authority Representative may be an officer or employee of the Authority or the City.

"Base Rentals" means that portion of the rentals payable under the Master Lease which is pledged to the payment of debt service on the bonds and to the replenishment of the Debt Service Reserve Fund under the Indenture.

"Bond Documents" means the Master Lease, the Security Documents and the Indenture.

"Bond Fund" means Municipal Building Authority of West Valley City, Utah, Bond Fund established under Section 5.2 hereof.

"Bond Registrar" means the Trustee (or other party designated as Registrar by Supplemental Indenture), appointed as the initial registrar for the Bonds pursuant to Section 2.8 hereof, and any additional or successor registrar appointed pursuant hereto.

"Bondholder," "Holder," "Owner" or "Registered Owner" means the person or persons in whose name or names a Bond shall be registered on the books of the Authority kept for that purpose in accordance with provisions of the Indenture.

"Bonds" means (i) the Initial Bonds, (ii) any Refunding Bonds issued pursuant to Section 2.13 hereof and (iii) any Additional Bonds issued pursuant to Section 2.14 hereof.

"Chair/President" means the Chair/President (including any acting Chair/President) of the Authority

"City Representative" means the Mayor, City Manager, and Finance Director of the City and any other person at any time designated to act on behalf of the City for purposes of performing any act with respect to a Project by a written certificate furnished to the Authority and the Trustee containing the specimen signature of such person and signed on behalf of the City or any duly authorized officer thereof. Such certificate may designate an alternate or alternates. The City Representative may be an officer or employee of the Authority or the City.

"Code" means the Internal Revenue Code of 1986, as amended.

"Construction Fund" means Municipal Building Authority of West Valley City, Utah, Construction Fund established under Section 5.5 hereof.

"Debt Service Reserve Fund" means the Municipal Building Authority of West Valley City, Utah, Debt Service Reserve Fund established under Section 5.4 hereof for the purpose of securing payment of Bonds issued under this Indenture.

"Debt Service Reserve Requirement" means with respect to each Series of Bonds issued pursuant to this Indenture, unless otherwise provided in the related Supplemental Indenture, an amount equal to the least of (i) 10% of the proceeds of such Series of Bonds determined on the basis of original principal amount (unless original issue premium or original issue discount exceeds 2% of original principal, then determined on the basis of initial purchase price to the public), (ii) the maximum annual debt service during any year for such Series of Bonds and (iii) 125% of the average annual debt service for such Series of Bonds; provided, however, that in the event any Series of Refunding Bonds is issued to refund only a portion and not all of the then Outstanding Bonds of any Series issued pursuant to this Indenture (the "Prior Bonds"), then the portion of such Series of Prior Bonds that remain Outstanding immediately after the issuance of such Refunding Bonds and the portion of such Refunding Bonds that is allocable to the refunding of such Series of Prior Bonds may be combined and treated as a single Series for purpose of determining the Debt Service Reserve Requirement relating to such combined Series and the resulting requirement shall be allocated among the two Series pro rata based upon the total principal amount remaining Outstanding for each Series. Each account of the Debt Service Reserve Fund shall only be used with respect to the related Series of Bonds.

"Direct Obligations" means direct noncallable obligations of (including obligations issued or held in book-entry form on the books of) the Department of the Treasury of the United States of America, obligations unconditionally guaranteed as to principal and interest by the United States of America and evidences of ownership interests in such direct or unconditionally guaranteed obligations.

"Direct Payments" means the interest subsidy payments received by the Authority from the Internal Revenue Service pursuant to Section 6431 and 1400U-2 of the Code or other similar programs (with respect to Bonds issued hereunder).

"Event of Default" means any occurrence or event specified in and defined by Section 9.1 hereof.

"General Indenture" means this General Indenture of Trust, by and between the Authority and the Trustee.

"Indenture" means this General Indenture and any Supplemental Indentures entered into in compliance with the provisions of Article XI.

"Initial Bonds" means the first Series of Bonds issued under the Indenture.

"Interest Payment Date" means the stated payment date of an installment of interest on the Bonds.

"Investment Obligations" means any of the following securities:

(i) Direct Obligations;

(ii) Obligations of any of the following federal agencies which obligations represent full faith and credit obligations of the United States of America: the Export-Import Bank of the United States; the Government National Mortgage Association; the Federal Financing Bank; the Farmer's Home Administration; the Federal Housing Administration; the Maritime Administration: General Services Administration, Small Business Administration; or the Department of Housing and Urban Development (PHA's);

(iii) Money market funds rated at the time of purchase "AAAm" or "AAAm-G" or better by S&P, including money market funds from which the Trustee or its affiliates receive fees for investment, advisory or other services to the fund;

(iv) Commercial paper which is rated at the time of purchase in the single highest classification, P-1 by Moody's or A-1+ by S&P, and which matures not more than 270 days after the date of purchase;

(v) Bonds, notes or other evidences of indebtedness rated "AAA" by S&P and "Aaa" by Moody's issued by the Federal National Mortgage Association or the Federal Home Loan Mortgage Corporation with remaining maturities not exceeding three years;

(vi) U.S. dollar denominated deposit accounts, federal funds and banker's acceptances with domestic commercial banks which have a rating on their short term certificates of deposit on the date of purchase of "A-1" or "A-1+" by S&P and "P-1" by Moody's and maturing no more than 360 days after the date of purchase (ratings on holding companies are not considered as the rating of the bank);

(vii) the fund held by the Treasurer for the State of Utah and commonly known as the Utah State Public Treasurer's Investment Fund; and

(viii) Any investments or securities permitted for investment of public funds under the State Money Management Act of 1974, Title 51, Chapter 7, Utah Code Annotated 1953, as amended.

"Master Lease" means the Master Lease Agreement dated as of even date herewith by and between the Authority, as lessor and the City, as lessee and any amendments and supplements thereto entered into in accordance with Article XII hereof.

"Moody's" means Moody's Investors Service, its successors and assigns, and, if such corporation shall no longer perform the functions of a securities rating agency, "Moody's" shall be deemed to refer to any other nationally recognized securities rating agency designated by the Authority.

"Outstanding" or "Bonds Outstanding" means all Bonds which have been authenticated and delivered by the Trustee under the Indenture, except:

(a) Bonds delivered to the Trustee for cancellation, whether after purchase in the open market or because of payment at, or redemption prior to, maturity;

(b) Bonds in lieu of which others have been authenticated under Sections 2.6, 2.7, 2.12 and 2.13 hereof; and

(c) Bonds deemed paid under Article VIII of this General Indenture.

"Paying Agent" means the Trustee, appointed as the initial paying agent for the Bonds pursuant to Section 2.8 hereof, and any additional or successor paying agent appointed pursuant hereto.

"Project" or "Projects" means collectively each Project identified in a Supplemental Indenture to be financed or refinanced with a Series of Bonds issued under the Indenture.

"Rebatable Arbitrage" shall mean with respect to any Series of Bonds the amount (determinable as of each Rebate Calculation Date) of rebatable arbitrage payable to the United States at the times and in the amounts specified in Section 148(f)(3) of the Code and Section 1.148-3 of the Regulations.

"Rebate Calculation Date" means, with respect to each Series of Bonds, the Interest Payment Date next preceding the fifth anniversary of the issue date of such Series of Bonds, each fifth anniversary of the initial Rebate Calculation Date for such Series of Bonds, and the date of retirement of the last Bond of such Series.

"Rebate Fund" means Municipal Building Authority of West Valley City, Utah, Rebate Fund established by Section 5.6 hereof.

"Recovery Zone Bonds" means interest subsidy bonds issuable by the Authority under Sections 1400U-2 and 6431 of the Code and a "qualified bond" under Section

1400U-2(a) of the Code or such other tax credit bonds of substantially similar nature which may be hereafter authorized.

"Refunding Bonds" means all Bonds (other than the Initial Bonds) issued pursuant to Section 2.13 hereof.

"Regular Record Date" means the fifteenth day (whether or not a Business Day) next preceding each Interest Payment Date.

"Regulations" and all references thereto shall mean and include applicable final, proposed and temporary United States Treasury Regulations, promulgated with respect to Sections 103 and 141 through 150 of the Code, including all amendments thereto made hereafter.

"Required Rebate Deposit" means, with respect to any Series of Bonds an amount determinable as of each Rebate Calculation Date, which when added to amounts then on deposit in the Rebate Fund with respect to such Series of Bonds, if any, equals the aggregate amount of Rebatable Arbitrage for such Series of Bonds less the amount of Rebatable Arbitrage theretofore paid to the United States with respect to such Series of Bonds, if any.

"Reserve Instrument" means a device or instrument issued by a Reserve Instrument Provider to satisfy all or any portion of the Debt Service Reserve Requirement. The term "Reserve Instrument" includes, by way of example and not of limitation, letters of credit, bond insurance policies, surety bonds, standby bond purchase agreements, lines of credit and other devices.

"Reserve Instrument Agreement" means any agreement entered into by the Authority and a Reserve Instrument Provider pursuant to a Supplemental Indenture and providing for the issuance by such Reserve Instrument Provider of a Reserve Instrument.

"Reserve Instrument Costs" means all fees, premiums, expenses and similar costs, other than Reserve Instrument Repayment Obligations, required to be paid to a Reserve Instrument Provider pursuant to a Reserve Instrument Agreement.

"Reserve Instrument Coverage" means, as of any date of calculation, the aggregate amount available to be paid to the Trustee pursuant hereto under all Reserve Instruments.

"Reserve Instrument Fund" means the Municipal Building Authority of West Valley City, Utah Reserve Instrument Fund created in Section 5.18 of the General Indenture to be held by the Trustee and administered pursuant to Section 5.19 of the General Indenture.

"Reserve Instrument Limit" means, as of any date of calculation and with respect to any Reserve Instrument, the maximum aggregate amount available to be paid under such Reserve Instrument into an account in the Debt Service Reserve Fund assuming for purposes of such calculation that the amount initially available under each Reserve

Instrument has not been reduced or that the amount initially available under each Reserve Instrument has only been reduced as a result of the reduction of the Debt Service Reserve Requirement.

"Reserve Instrument Provider" means any bank, savings and loan association, savings bank, thrift institution, credit union, insurance company, surety company or other institution issuing a Reserve Instrument.

"Reserve Instrument Repayment Obligations" means, as of any date of calculation and with respect to any Reserve Instrument Agreement, those outstanding amounts payable by the Authority under such Reserve Instrument Agreement to repay the Reserve Instrument Provider for payments previously made by it pursuant to a Reserve Instrument. There shall not be included in the calculation of Reserve Instrument Repayment Obligations any Reserve Instrument Costs.

"S&P" means Standard & Poor's Ratings Services, a Standard & Poor's Financial Services LLC business, its successors and assigns, and, if such entity shall no longer perform the functions of a securities rating agency, "S&P" shall be deemed to refer to any other nationally recognized securities rating agency designated by the Authority, with the approval of the Trustee.

"Security Documents" means collectively the security documents described in each Supplemental Indenture.

"Serial Bonds" means those Bonds other than Term Bonds.

"Series" means all of the Bonds authenticated and delivered on original issuance and identified pursuant to the Supplemental Indenture authorizing such Bonds as a separate Series of Bonds, and any Bonds thereafter authenticated and delivered in lieu thereof or in substitution therefor.

"Sinking Fund Account" means Municipal Building Authority of West Valley City, Utah, Sinking Fund Account of the Bond Fund established by Section 5.3 hereof.

"Sinking Fund Installment" means the amount of money which is required to be deposited into the Sinking Fund Account in each year as specified in the Supplemental Indenture authorizing Term Bonds for the retirement of such Term Bonds (whether at maturity or by redemption), and including the redemption premium, if any.

"Special Record Date" means such date as may be fixed for the payment of defaulted interest on the Bonds in accordance with this General Indenture.

"State" means the State of Utah.

"Supplemental Indenture" means any indenture between the Authority and the Trustee entered into pursuant to and in compliance with the provisions of Article XI hereof.

"Tax Credit Bonds" means the interest subsidy bonds issuable by the Authority under Sections 54AA and 6431 of the Code and a "qualified bond" under Section 54AA(g)(2) of the Code or such other tax credit bonds of substantially similar nature which may be hereafter authorized.

"Tax-Exempt Bonds" means Bonds the interest on which is intended to be excludable from gross income for federal income tax purposes.

"Term Bonds" means the Bonds which shall be subject to retirement by operation of mandatory sinking fund payments or redemptions from the Sinking Fund Account.

"Trust Estate" means the property conveyed to the Trustee pursuant to the Granting Clauses hereof.

"Trustee" means _____, a national banking association and its successors and any association resulting from or surviving any consolidation or merger to which it or its successors may be a party and any successor trustee at the time serving as successor trustee under the Indenture.

Section 1.2. Indenture to Constitute Contract. In consideration of the purchase and acceptance from time to time of any and all of the Bonds authorized to be issued hereunder by the Registered Owners thereof, and the issuance from time to time of any and all Reserve Instruments by Reserve Instrument Providers pursuant hereto, this General Indenture shall be deemed to be and shall constitute a contract between the Authority and the Owners from time to time of the Bonds; and the Reserve Instrument Providers, and the pledge made in this General Indenture and the covenants and agreements herein set forth to be performed by or on behalf of the Authority shall be for FIRST, the equal benefit, protection and security of the Owners of any and all of the Bonds all of which, regardless of the time or times of their authentication and delivery or maturity, shall be of equal rank without preference, priority or distinction of any of the Bonds over any other thereof, except as expressly provided in or permitted by this General Indenture, and SECOND, for the equal benefit, protection and security of the Reserve Instrument Providers of any and all of the Reserve Instruments which, regardless of the time or times of their issuance, delivery or termination, shall be of equal rank without preference, priority or distinction of any Reserve Instrument over any other thereof.

Section 1.3. Construction. This General Indenture, except where the context by clear implication herein otherwise requires, shall be construed as follows:

(a) The terms "hereby," "hereof," "herein," "hereto," "hereunder," and any similar terms used in this General Indenture shall refer to this General Indenture in its entirety unless the context clearly indicates otherwise.

(b) Words in the singular number include the plural, and words in the plural include the singular.

(c) Words in the masculine gender include the feminine and the neuter, and when the sense so indicates, words of the neuter gender refer to any gender.

(d) Articles, sections, subsections, paragraphs and subparagraphs mentioned by number, letter, or otherwise, correspond to the respective articles, sections, subsections, paragraphs and subparagraphs hereof so numbered or otherwise so designated.

(e) The titles or leadlines applied to articles, sections and subsections herein are inserted only as a matter of convenience and ease in reference and in no way define, limit or describe the scope or intent of any provisions of this General Indenture.

ARTICLE II

TERMS AND PROVISIONS OF BONDS; ADDITIONAL BONDS AND REFUNDING BONDS

Section 2.1. Authorization of Bonds. There is hereby created for issuance hereunder an issue of Bonds which may, if and when authorized by Supplemental Indenture, be issued in one or more separate Series. Each Series of Bonds shall be authorized by a Supplemental Indenture, which shall state the purpose or purposes for which each such Series of Bonds is being issued. The aggregate principal amount of Bonds which may be issued shall not be limited except as provided herein or as may be limited by law provided that the aggregate principal amount of Bonds of each such Series shall not exceed the amount specified in the Supplemental Indenture authorizing each such Series of Bonds.

Section 2.2. Description of Bonds; Payment.

(a) The Bonds of each Series issued under the provisions hereof may be issued only as registered bonds. Unless otherwise specified in the Supplemental Indenture authorizing such Series of Bonds, Bonds of each Series shall be in the denomination of Five Thousand Dollars ($5,000) each or any integral multiple thereof, shall be numbered consecutively from R-1 upwards and if applicable shall bear interest payable as specified in each Supplemental Indenture.

(b) The Bonds of each Series issued hereunder shall be dated, shall bear interest calculated on the basis of a 360-day year consisting of twelve 30-day months (unless otherwise specified by Supplemental Indenture) at a rate or rates not exceeding the maximum rate permitted by law on the date of initial issuance of Bonds of such Series, and be payable on the days, shall be stated to mature on the days and in the years and shall be subject to redemption prior to their respective maturities, all as set forth in the Supplemental Indenture authorizing such Series of Bonds. The Bonds of each Series shall be designated "Municipal Building Authority of West Valley City, Utah [Taxable] Lease Revenue [Refunding] Bonds, Series ____," in each case inserting the year in which the Bonds are issued and an identifying Series letter or a project designation (if applicable).

(c) Both the principal of and the interest on the Bonds shall be payable in any coin or currency of the United States of America, as at the respective time of payment, shall be legal tender for payment of public and private debts. Payment of the interest on any Bond shall be made to the person appearing on the Bond registration books of the Bond Registrar hereinafter provided for as the Registered Owner thereof by check or draft mailed to the Registered Owner at his address as it appears on such registration books or to owners of $1,000,000 or more in aggregate principal amount of Bonds (or owners of 100% of any Series then Outstanding) by wire transfer to a bank account within the United States

designated by the Registered Owner in written instructions furnished to the Trustee. The interest on Bonds so payable, and punctually paid and duly provided for, on any Interest Payment Date will be paid to the person who is the Registered Owner thereof at the close of business on the Regular Record Date for such interest. Any such interest not so punctually paid or duly provided for shall forthwith cease to be payable to the registered owner of any Bond on such Regular Record Date, and may be paid to the person who is the Registered Owner thereof at the close of business on a Special Record Date for the payment of such defaulted interest to be fixed by the Trustee, notice thereof to be given to such Registered Owner not less than ten days prior to such Special Record Date. The principal of and premium, if any, on Bonds are payable upon presentation and surrender thereof at the principal corporate trust office of the Trustee as Paying Agent, except as otherwise provided by Supplemental Indenture. All such payments shall be valid and effectual to satisfy and discharge the liability upon such Bond to the extent of the sum or sums so paid.

(d) The Bonds of each Series may contain or have endorsed thereon such provisions, specifications and descriptive words not inconsistent with the provisions hereof as may be necessary or desirable to comply with custom, the rules of any securities exchange or commission or brokerage board or otherwise, as may be specified in the Supplemental Indenture authorizing such Series of Bonds.

Section 2.3. Execution; Limited Obligation. The Bonds shall be executed on behalf of the Authority with the manual or official facsimile signature of its Chair/President, countersigned with the manual or official facsimile signature of the Secretary-Treasurer, and shall have impressed or imprinted thereon the corporate seal or facsimile thereof of the Authority. In case any officer, the facsimile of whose signature shall appear on the Bonds, shall cease to be such officer before the delivery of such Bonds, such facsimile shall nevertheless be valid and sufficient for all purposes, the same as if such officer had remained in office until delivery.

The Bonds shall not be general obligations but shall be special, limited obligations of the Authority payable solely out of and to the extent available from the Base Rentals, and, if paid by the City, the Purchase Option Price under the Master Lease and other amounts derived from the leasing of the Projects (except to the extent paid out of moneys attributable to the proceeds derived from the sale of the Bonds or to income from the temporary investment thereof and, under certain circumstances, to moneys held in funds or accounts by the Trustee, to Net Proceeds from insurance policies, performance bonds, condemnation awards and liquidation proceeds with respect to the Projects and from Direct Payments) and shall be a valid claim of the respective Bondholders thereof only against the Bond Fund, the Debt Service Reserve Fund and other moneys held by the Trustee and the Base Rentals, and other amounts derived from the leasing of the Projects under the Master Lease, which Base Rentals and other amounts are hereby pledged, assigned and otherwise secured for the equal and ratable payment of the Bonds and shall be used for no other purpose than to pay the principal of, premium, if any, and interest on the Bonds (including any make whole interest payments or

redemption premiums on any Bonds), except as may be otherwise expressly authorized in the Indenture or in the Master Lease. The Authority shall not be obligated to pay the principal of such Bonds or the interest thereon or other costs incident thereto except from the moneys pledged therefor under the Indenture. The Bonds and the interest thereon shall never constitute an indebtedness of the City within the meaning of any constitutional limitation or statutory provision and shall not constitute or give rise to a pecuniary liability of the City or a charge against the general credit or taxing power of the City. Neither the City, nor the Authority on its behalf, has pledged the credit of the City to the payment of the Bonds, the interest thereon or amounts due or to become due under the Master Lease. The City shall not be obligated to appropriate Funds for the purpose of paying Base Rentals, Additional Rentals or the Purchase Option Price under the Master Lease, and no judgment may be entered against the City in the event of an insufficiency of moneys to pay the principal of, premium, if any, and interest on the Bonds. The payment obligations of the City under the Master Lease are subject to annual renewal and will be terminated upon the occurrence of an Event of Nonappropriation. In such event, all payments from the City under the Master Lease will terminate, and the Bonds and the interest thereon will be payable solely from and to the extent of such moneys, if any, as may be held by the Trustee under the Indenture (except amounts held for the payment of Bonds not deemed Outstanding) and, subject to the provisions of Article IX hereof, any moneys made available from a liquidation of the Authority's interest in the Project financed with such Bonds subsequent to foreclosure of the lien of the Indenture and the Security Documents. No deficiency judgment subsequent to foreclosure of the lien of the Indenture and the Security Documents may be entered against the City or the Authority, and no breach of any provision of the Master Lease, the Security Documents or the Indenture shall impose any general obligation or liability upon or a charge against the City, the Authority or upon the general credit or taxing powers of the City. Except as expressly provided in the Master Lease, no judgment requiring a payment of money may be entered against the City under the Master Lease.

The provisions of this Section relating to the execution of Bonds may be modified as they apply to the Bonds of any Series by the Supplemental Indenture authorizing such Series of Bonds.

Section 2.4. Authentication and Delivery of Bonds.

(a) The Authority shall deliver executed Bonds of each Series to the Trustee for authentication. Subject to the satisfaction of the conditions for authentication of Bonds set forth herein, the Trustee shall authenticate such Bonds, and deliver them upon the order of the Authority to the purchasers thereof upon the payment by the purchasers to the Trustee for the account of the Authority of the purchase price therefor. Delivery by the Trustee shall be full acquittal to the purchasers for the purchase price of such Bonds, and such purchasers shall be under no obligation to see to the application thereof. The proceeds of the sale of such Bonds shall, however, be disposed of only as provided herein and in the Master Lease, and in the Supplemental Indenture executed in connection therewith.

(b) No Bond shall be valid or obligatory for any purpose or entitled to any security or benefit hereunder, unless and until a certificate of authentication on such Bond substantially in the form set forth in the Supplemental Indenture authorizing such Bond shall have been duly executed by the Trustee, and such executed certificate of the Trustee upon any such Bond shall be conclusive evidence that such Bond has been authenticated and delivered hereunder. The Trustee's certificate of authentication on any Bond shall be deemed to have been executed by it if signed by an authorized officer of the Trustee, but it shall not be necessary that the same officer sign the certificate of authentication on all of the Bonds issued hereunder.

(c) Prior to the authentication by the Trustee of each Series of Bonds there shall have been filed with the Trustee:

(i) A copy, duly certified by the Secretary-Treasurer of the Authority of the resolution of the Authority and a copy, duly certified by the City Recorder, of the resolution of the City, each approving the execution and delivery of the instruments specified in Subparagraphs (ii) and (iii) below and the execution and delivery of such Series of Bonds, together with a certificate, dated as of the date of authentication of such Series of Bonds, of the Secretary-Treasurer and the City Recorder, respectively, that such proceedings are still in force and effect without amendments except as shown in such proceedings;

(ii) A copy, duly certified by the Secretary-Treasurer of the Authority, of (a) this General Indenture (to the extent not theretofore so filed) and the Supplemental Indenture authorizing such Series of Bonds and (b) the Master Lease (to the extent not theretofore so filed) and any amendments to the Master Lease executed in connection with such Supplemental Indenture and such Series of Bonds;

(iii) Original executed counterparts of the Security Documents identified in such Supplemental Indenture;

(iv) A request and authorization to the Trustee on behalf of the Authority and signed by the Chair/President of the Authority to authenticate and deliver the Bonds to the purchasers therein identified upon payment to the Trustee, but for the account of the Authority, of a sum specified in such request and authorization. The proceeds of such payment shall be deposited with the Trustee as provided in the Master Lease and the Supplemental Indenture;

(v) (A) In the case of the Initial Bonds, an ALTA mortgagee title policy or policies, or commitment therefor, of mortgage title insurance in an aggregate amount equal to not less than the principal amount of the Initial Bonds insuring the lien of the Security Documents identified in the Supplemental Indenture, subject only to Permitted

Encumbrances and (B) in the case of Additional Bonds and Refunding Bonds, the title insurance specified in Section 2.14(c) and Section 2.13(c) hereof, respectively; alternatively, for the situations described in both (A) and (B), the Authority may reasonably expect to be able to deliver the required mortgage title insurance following delivery of the related Series of Bonds, provided that no proceeds of such Bonds shall be drawn out of the Construction Fund until such mortgage title insurance is delivered (except for costs of issuance related to such Bonds);

(vi) A written opinion of nationally recognized bond counsel, to the effect that (a) the Authority has authorized the execution and delivery of the General Indenture and Supplemental Indenture and such Series of Bonds, (b) the General Indenture and Supplemental Indenture have been duly executed and delivered by the Authority and are valid and binding agreements of the Authority; and (c) such Series of Bonds have been duly executed and delivered to the Trustee by the Authority and, upon authentication thereof by the Trustee pursuant to the Indenture and delivery thereof by the Trustee pursuant to the request referred to in Subparagraph (iv), will be valid and binding obligations of the Authority;

(vii) A written opinion of counsel to the City as to the legal, valid and binding nature of the Master Lease as against the City and such other matters as may be reasonably required by the purchasers of such Series of Bonds;

(viii) A written opinion of counsel to the Authority as to the legal, valid and binding nature of the Master Lease, the General Indenture, the Supplemental Indenture and the Security Documents as against the Authority and such other matters as may be reasonably required by the purchasers of such Series of Bonds;

(ix) Evidence that upon the issuance of such Bonds there will be on deposit in the Debt Service Reserve Fund an amount (including Reserve Instruments) at least equal to the Debt Service Reserve Requirement, if any, for all Bonds to be Outstanding immediately following the issuance of such Bonds;

(x) The items required by Section 2.13 in the case of Refunding Bonds and Section 2.14 in the case of Additional Bonds; and

(xi) Such other agreements, certificates, documents and opinions as are required to be delivered to the purchasers of such Series of Bonds.

Section 2.5. Form of Bonds. For each Series of Bonds, the text of such Bonds, and the Trustee's Authentication Certificate shall be in substantially the forms thereof set forth in the Supplemental Indenture authorizing the issuance of such Bonds, with such

omissions, insertions and variations not inconsistent with the terms hereof as may be necessary, desirable, authorized and permitted hereby.

Section 2.6. Mutilated, Lost, Stolen or Destroyed Bonds. In the event any Bond is mutilated, lost, stolen or destroyed, the Authority may execute and the Trustee may authenticate a new Bond of like date, maturity and denomination to that mutilated, lost, stolen or destroyed; provided that, in the case of any mutilated Bond, such mutilated Bond shall first be surrendered to the Trustee, and in the case of any lost, stolen or destroyed Bond, there shall be first furnished to the Authority and the Trustee evidence of such loss, theft or destruction satisfactory to the Authority and the Trustee, together in each case with an indemnity satisfactory to them. In the event any such Bond shall have matured or been redeemed or be approaching maturity, instead of issuing a duplicate Bond, the Authority may pay the same on or after the due date thereof without surrender thereof, making such requirements as it deems fit for its protection, including a lost instrument bond or other satisfactory indemnity. The Authority and the Trustee may charge the Bondholder of such Bond with their reasonable fees and expenses in this connection. Any Bond issued pursuant to this Section shall be deemed part of the Series of the Bonds in respect of which it was issued and an original additional contractual obligation of the Authority.

Section 2.7. Registration and Exchange of Bonds; Persons Treated as Owners. The Authority shall cause books for the registration and for the transfer of the Bonds to be kept by the Trustee which is hereby constituted and appointed the Bond Registrar of the Authority, provided, however, that the Authority may by Supplemental Indenture select a party other than the Trustee to act as Bond Registrar with respect to the Series of Bonds issued under said Supplemental Indenture. Any Bond may, in accordance with its terms, be transferred only upon the registration books kept by the Bond Registrar, by the person in whose name it is registered, in person or by his duly authorized attorney, upon surrender of such Bond for cancellation, accompanied by delivery of a written instrument of transfer in a form approved by the Bond Registrar, duly executed. No transfer shall be effective until entered on the registration books kept by the registrar. This Indenture shall constitute a "system of registration" for all purposes of the Registered Public Obligations Act, Title 15, Chapter 7, Utah Code Annotated 1953, as amended. Upon surrender for transfer of any Bond at the designated office of the Trustee, duly endorsed for transfer or accompanied by an assignment duly executed by the Bondholder or his attorney duly authorized in writing, the Authority shall execute and the Trustee shall authenticate and deliver in the name of the transferee or transferees a new, fully registered Bond or Bonds of the same Series and the same maturity for a like aggregate principal amount as the Bond surrendered for transfer. Bonds may be exchanged at the principal corporate trust office of the Trustee for a like aggregate principal amount of Bonds of other authorized denominations of the same Series and the same maturity. The execution by the Authority of any Bond of any authorized denomination shall constitute full and due authorization of such denomination, and the Trustee shall thereby be authorized to authenticate and deliver such Bond upon such exchange. The Authority and the Trustee shall not be required to transfer or exchange any Bond (i) during the period from and including any Regular Record Date, to and including the next succeeding Interest Payment Date, (ii) during the period from and including the day fifteen days prior to any Special Record

Date, to and including the date of the proposed payment pertaining thereto, (iii) during the period from and including the day fifteen days prior to the mailing of notice calling any Bonds for redemption, to and including the date of such mailing, or (iv) at any time following the mailing of notice calling such Bond for redemption.

The Authority, the Bond Registrar and the Paying Agent may treat and consider the person in whose name each Bond is registered on the registration books kept by the Bond Registrar as the holder and absolute owner thereof for the purpose of receiving payment of, or on account of, the principal or redemption price thereof and interest due thereon and for all other purposes whatsoever, and neither the Authority, nor the Bond Registrar nor the Paying Agent shall be affected by any notice to the contrary. Payment of or on account of either principal of or interest on any Bond shall be made only to or upon order of the Registered Owner thereof or such person's legal representative, but such registration may be changed as hereinabove provided. All such payments shall be valid and effectual to satisfy and discharge the liability upon such Bond to the extent of the sum or sums so paid.

The Trustee shall require the payment by the Bondholder requesting exchange or transfer of Bonds of any tax or other governmental charges which are required to be paid with respect to such exchange or transfer and such charges shall be paid before such new Bond shall be delivered.

Section 2.8. Designation of the Trustee as Bond Registrar and Paying Agent and Designation of Any Additional Paying Agents. The Trustee is hereby designated and agrees to act as Bond Registrar and Paying Agent for and in respect to the Bonds. The Authority hereby covenants and agrees to cause the necessary arrangements to be made through the Trustee and to be thereafter continued for the designation of any additional paying agents and for the making available of moneys hereunder for the payment of such of the Bonds as shall be presented when due at the designated office of said additional paying agent.

Section 2.9. Cancellation. All Bonds which have been surrendered for payment, redemption or exchange, and Bonds purchased from any moneys held by the Trustee hereunder or surrendered to the Trustee by the Authority, shall be canceled and destroyed by the Trustee and shall not be reissued.

Section 2.10. Nonpresentation of Bonds. Unless otherwise provided by Supplemental Indenture, in the event any Bond shall not be presented for payment when the principal thereof becomes due, either at maturity or otherwise, or at the date fixed for redemption thereof, if funds sufficient to pay such Bond shall have been made available to the Trustee, all liability of the Authority to the Registered Owner thereof for the payment of such Bond shall forthwith cease, determine and be completely discharged, and thereupon it shall be the duty of the Trustee to hold such fund or funds, without liability to the Registered Owner of such Bond for interest thereon, for the benefit of the Registered Owner of such Bond who shall thereafter be restricted exclusively to such fund or funds for any claim of whatever nature on his part hereunder or on, or with respect to, said Bond. If any Bond shall not be presented for payment within four (4)

years following the date when such Bond becomes due, whether by maturity or otherwise, the Trustee shall, to the extent permitted by law, repay to the Authority the funds theretofore held by it for payment of such Bond, and such Bond shall, subject to the defense of any applicable statute of limitation, thereafter be an unsecured obligation of the Authority, and the Registered Owner thereof shall be entitled to look only to the Authority for payment, and then only to the extent of the amount so repaid, and the Authority shall not be liable for any interest thereon and shall not be regarded as a trustee of such money. The provisions of this Section are subject to the provisions of Title 67, Chapter 4a, Utah Code Annotated 1953, as amended.

Section 2.11. Initial Bonds. Subject to the provisions hereof, the Initial Bonds may be authenticated and delivered by the Trustee upon satisfaction of the conditions specified in Section 2.4 hereof and any additional conditions specified in the Supplemental Indenture authorizing such Series of Bonds.

Section 2.12. Temporary Bonds.

(a) Until the definitive Bonds of any Series are prepared, the Authority may execute, in the same manner as is provided in Section 2.3 hereof, and upon the request of the Authority, the Trustee shall authenticate and deliver, in lieu of definitive Bonds, but subject to the same provisions, limitations and conditions as the definitive Bonds except as to the denominations thereof, one or more temporary Bonds substantially of the tenor of the definitive Bonds in lieu of which such temporary Bond or Bonds are issued, in denominations authorized by the Authority, and with such omissions, insertions and variations not inconsistent with the Indenture as may be appropriate to temporary Bonds. The Authority at its own expense shall prepare and execute and, upon the surrender of such temporary Bonds, for exchange and the cancellation of such surrendered temporary Bonds, the Trustee shall authenticate and, without charge to the Registered Owner thereof, deliver in exchange therefor, definitive Bonds, of the same aggregate principal amount, Series and maturity as the temporary Bonds surrendered. Until so exchanged, the temporary Bonds shall in all respects be entitled to the same benefits and security as definitive Bonds authenticated and issued pursuant hereto.

(b) If the Authority shall authorize the issuance of temporary Bonds in more than one denomination, the Registered Owner of any temporary Bond or Bonds may, at his option, surrender the same to the Trustee in exchange for another temporary Bond or Bonds of like aggregate principal amount, series and maturity of any other authorized denomination or denominations, and thereupon the Authority shall execute and the Trustee shall authenticate and, in exchange for the temporary Bond or Bonds so surrendered, shall deliver a temporary Bond or Bonds of like aggregate principal amount, series and maturity in such other authorized denomination or denominations as shall be requested by such Registered Owner.

(c) All temporary Bonds surrendered in exchange either for another temporary Bond or Bonds or for a definitive Bond or Bonds shall be forthwith canceled by the Trustee.

Section 2.13. Issuance of Refunding Bonds. So long as the Master Lease is in effect and no Event of Default under the Indenture or the Master Lease has occurred and is continuing and so long as no Event of Nonappropriation has occurred and is continuing, one or more Series of Refunding Bonds may be issued, authenticated and delivered for the purpose of refunding Bonds or other obligations of the Authority. The Refunding Bonds may be issued in one or more Series, shall be authenticated by the Trustee and, upon payment to the Trustee of the proceeds of said sale of Refunding Bonds, they shall be delivered by the Trustee to or upon the order of the purchasers thereof, but only upon satisfaction of the conditions specified in Section 2.4 hereof and there being filed with the Trustee:

(a) Original executed counterparts of a Supplemental Indenture, a supplement or amendment (if necessary) to the Security Documents and the Master Lease providing for the issuance of such Refunding Bonds, and further providing for a revision to the Base Rentals to be paid by the City under the Master Lease to such amount as shall be necessary to pay, assuming that no Event of Default or Event of Nonappropriation shall occur, the principal of, premium, if any, and interest on the Bonds (including the Refunding Bonds being issued and the Initial Bonds and any Additional Bonds and Refunding Bonds theretofore issued and to remain Outstanding), and to extend the Lease Term if the maturity of any of the Refunding Bonds would otherwise occur after the expiration of the then current Lease Term. The date or dates of the Refunding Bonds, the rate or rates of interest on the Refunding Bonds, and the redemption provisions (if any) with respect thereto all shall be as provided in the Supplemental Indenture;

(b) If any of the Bonds theretofore issued were Tax-Exempt Bonds or were designated as Tax Credit Bonds qualifying for Direct Payments, a written opinion of nationally recognized bond counsel, to the effect that the exclusion from gross income of the interest on the Tax-Exempt Bonds theretofore issued or the status of the Bonds as Tax Credit Bonds qualifying for Direct Payments, for federal income tax purposes, will not be adversely affected by the issuance of the Refunding Bonds being issued;

(c) A date-down endorsement to the ALTA mortgagee title insurance policy issued in connection with the issuance of the Bonds being refunded or commitment therefor (or if the bonds or other obligations being refunded were not issued pursuant to this Indenture, an ALTA Mortgagee title insurance policy or commitment therefor), which endorsement or policy shall insure to the date of issuance of such Refunding Bonds and the recording of any supplement or amendment to the Security Documents the continuing validity of the lien thereof, as modified by any supplement or amendment to the Security Documents, as a first and prior lien on the premises thereby secured, subject only to Permitted Encumbrances, and which endorsement or policy shall increase the amount of title

insurance coverage thereunder, if necessary, to an amount, which when added to the coverage provided under any other title policies delivered with respect to other Bonds then Outstanding and issued with respect to the Project financed by the Bonds or other obligations to be refunded, is at least equal to the aggregate principal amount of all Bonds to be Outstanding with respect to such Project following said refunding and naming the Trustee as an insured; alternatively, the Authority may reasonably expect to be able to deliver the required mortgage title insurance following delivery of the related Series of Bonds, provided that no proceeds of such Bonds shall be drawn out of the Construction Fund until such mortgage title insurance is delivered (except for costs of issuance related to such Bonds);

(d) (i) A report of an independent firm of certified public accountants to the effect that, upon the issuance of the Refunding Bonds, moneys and Direct Obligations will be deposited with the Trustee or an escrow agent sufficient to cause the Bonds (or other obligations) being refunded to be deemed paid under Article VIII hereof (or a comparable provision of the documents authorizing the obligations to be refunded); or (ii) in the event that the Bonds (or other obligations) to be refunded are to be redeemed on the date of issuance of the Refunding Bonds or within ninety (90) days thereafter, there shall be delivered to the Trustee evidence satisfactory to it that upon the issuance of the Refunding Bonds moneys and Direct Obligations will be deposited with the Trustee or an escrow agent sufficient, without taking into account investment earnings thereon, to redeem the Bonds (or other obligations); and

(e) A certificate of the Authority, stating that, as of the date of such delivery, no event or condition has happened or exists and is continuing, or is happening or existing, which constitutes, or which, with notice or lapse of time or both, would constitute, an Event of Default under the Indenture or the Master Lease and there has not occurred and is then continuing an Event of Nonappropriation; provided however that the existence of an Event of Default shall not preclude the issuance of any Refunding Bonds if: (i) the issuance of such Refunding Bonds otherwise complies with the provisions hereof and (ii) any Event of Default will cease to continue upon the issuance of such Refunding Bonds and the application of the proceeds thereof.

Each Series of Refunding Bonds issued pursuant to this Indenture shall be equally and ratably secured under the Indenture with the Initial Bonds and all other Series of Refunding Bonds and Additional Bonds, if any, theretofore issued pursuant to the Indenture, without preference, priority or distinction of any Bonds over any other thereof.

Section 2.14. Additional Bonds. So long as the Master Lease is in effect and no Event of Default under the Indenture or the Master Lease has occurred and is continuing and so long as no Event of Nonappropriation has occurred and is continuing, one or more Series of Additional Bonds may be issued, authenticated and delivered for the purpose of financing Costs of Acquisition and Construction of a Project or Projects. The Additional Bonds may be issued in one or more Series, shall be authenticated by the Trustee and,

upon payment to the Trustee of the proceeds of said sale of Additional Bonds, they shall be delivered by the Trustee to or upon the order of the purchasers thereof, but only upon satisfaction of the conditions specified in Section 2.4 hereof and there being filed with the Trustee:

(a) Original executed counterparts of a Supplemental Indenture, additional Security Documents or a supplement or amendment (if necessary) to the Security Documents and Master Lease providing for the financing of a Project and for the issuance of the Additional Bonds and further providing for an increase in the Base Rentals to be paid by the City under the Master Lease in such amount as shall be necessary to pay, assuming that no Event of Default or Event of Nonappropriation shall occur, the principal of, premium, if any, and interest on the Bonds (including the Additional Bonds being issued and the Initial Bonds and any Additional Bonds and Refunding Bonds theretofore issued and Outstanding), and to extend the Lease Term if the maturity of any of the Additional Bonds would otherwise occur after the expiration of the then current Lease Term. The date or dates of the Additional Bonds, the rate or rates of interest on the Additional Bonds, and the redemption provisions (if any) with respect thereto all shall be as provided in the Supplemental Indenture;

(b) If any of the Bonds theretofore issued were Tax-Exempt Bonds or were designated as Tax Credit Bonds qualifying for Direct Payments, a written opinion of nationally recognized bond counsel, to the effect that the exclusion from gross income of the interest on the Tax-Exempt Bonds theretofore issued or the status of the Bonds as Tax Credit Bonds qualifying for Direct Payments, for federal income tax purposes, will not be adversely affected by the issuance of the Additional Bonds being issued;

(c) A date-down endorsement to the ALTA mortgagee title insurance policy issued in connection with the issuance of the Initial Bonds (or other Bonds) or commitment therefor or an additional ALTA mortgagee title insurance policy or commitment therefor, which endorsement or policy shall insure to the date of issuance of such Additional Bonds and the recording of any additional Security Documents or supplement to the Security Documents, if required, the continuing validity of the lien thereof, as modified by any supplement to the Security Documents, as a first and prior lien on the premises thereby secured, subject only to Permitted Encumbrances, and which endorsement or additional policy shall increase the amount of title insurance coverage thereunder by an amount at least equal to the aggregate principal amount of the Additional Bonds to be issued (or in the case of Additional Bonds issued to complete or extend a Project previously financed hereunder the endorsement to the original policy for such Project shall increase the coverage to at least the aggregate principal amount of Bonds issued for such Project to be Outstanding following the issuance of such Additional Bonds) and naming the Trustee as an insured. In the event that the property upon which additional projects are to be located has not been acquired at or prior to the time of issuance of the Additional Bonds, the amendment to Master Lease relating to such Additional Bonds shall require that such endorsement or additional title

policy with respect to such property be delivered at the time of or prior to any disbursements being made from the Construction Fund with respect to such portion of the Project (except for costs of issuance related to such Bonds);

(d) If such Series of Additional Bonds is being issued in whole or in part for construction purposes, (i) a copy, duly certified by the Secretary-Treasurer of the Authority, of the project contract and architect's agreement with respect to such construction and the performance and payment bond covering such contract or, in the alternative, a requirement that a copy of such documents be delivered to the Trustee prior to the time that moneys are withdrawn from the Construction Fund with respect to such portions of the Project, and (ii) a certificate of the architect or engineer responsible for planning and designing any such construction which sets forth the estimated useful life of the Project or Projects, as so improved and extended, in compliance with Section 17D-2-301 of the Act; and

(e) A certificate of the Authority, stating that as of the date of such delivery no event or condition has happened or exists and is continuing, or is happening or existing, which constitutes, or which, with notice or lapse of time or both, would constitute, an Event of Default under the Indenture or the Master Lease and there has not occurred and is then continuing an Event of Nonappropriation; provided however that the existence of an Event of Default shall not preclude the issuance of any Additional Bonds if: (i) the issuance of such Additional Bonds otherwise complies with the provisions hereof and (ii) any Event of Default will cease to continue upon the issuance of such Additional Bonds and the application of the proceeds thereof.

Each Series of Additional Bonds issued pursuant to the Indenture shall be equally and ratably secured under the Indenture with the Initial Bonds and all other Series of Additional Bonds and Refunding Bonds, if any, theretofore issued pursuant to the Indenture, without preference, priority or distinction of any Bonds over any other thereof.

ARTICLE III

REDEMPTION PROVISIONS

Section 3.1. Redemption. The Bonds of a Series may be callable for redemption prior to maturity as provided in the Supplemental Indenture authorizing said Series of Bonds.

Section 3.2. Extraordinary Redemption. The Bonds of a Series shall be callable for redemption prior to maturity in whole on any date, if (i) the Project financed by such Series or a material portion thereof is damaged or destroyed or taken in a condemnation proceeding, or a material defect in the construction of said Project shall become apparent, or title to or the use of all or any material portion of said Project shall be lost by reason of a defect in title thereto, (ii) the Net Proceeds of any insurance policy, performance bond or condemnation award made available by reason of one or more such occurrences shall be insufficient to pay in full the cost of repairing or replacing such portion of said Project, and (iii) the City elects to discharge its obligation to repair and replace such portion of said Project by depositing such Net Proceeds into the Bond Fund. Upon the deposit of such Net Proceeds in the Bond Fund, the payment obligations of the City with respect to said Project or Projects financed by such Series of Bonds under the Master Lease shall terminate and the City shall have no further obligation for the payment of Base Rentals and Additional Rentals with respect to said Project or Projects, and possession of said Project or Projects, as well as all right, title and interest of the City and the Authority in any funds or accounts created under the Indenture with respect to said Project or Projects shall be surrendered to the Trustee, as trustee for the Bondholders. Thereafter, the Indenture and the Security Documents applicable to said Project or Projects may, subject to the limitations of Article IX hereof, be foreclosed and the Authority's interest in said Project or Projects liquidated and the proceeds of such liquidation and the Net Proceeds of any insurance policy, performance bond or condemnation award so deposited in the Bond Fund, as well as all other moneys on deposit in any fund created under the Indenture with respect to said Project or Projects (except moneys held in the Rebate Fund or for the payment of Bonds not then deemed outstanding), shall be applied to the redemption of the applicable Series of Bonds at the earliest date practicable, as specified in a written notice from the Authority to the Trustee. Any such redemption of said Series of Bonds shall be made upon payment of all or a prorated portion of the principal amount thereof plus accrued interest thereon to the redemption date. IN THE EVENT THE BONDS OF ANY SERIES ARE TO BE REDEEMED BY PAYMENT OF AN AMOUNT LESS THAN THE OUTSTANDING PRINCIPAL AMOUNT THEREOF, AND ACCRUED INTEREST TO THE REDEMPTION DATE, NO FURTHER CLAIM FOR PAYMENT MAY BE HAD BY THE BONDHOLDERS AGAINST THE AUTHORITY, THE CITY, ANY SUBLESSEE OR THE TRUSTEE WITH RESPECT TO SAID SERIES OF BONDS. In the event there are moneys remaining in the Bond Fund after payment in full of all Bonds of said Series issued under the Indenture, the Trustee is authorized and directed to transfer said moneys to the City.

Section 3.3. Other Redemption Provisions. The Term Bonds of each Series may be subject, to the extent provided in the Supplemental Indenture authorizing each

such Series of Bonds, to redemption prior to maturity by operation of Sinking Fund Installments required to be made to the Sinking Fund Account. The Bonds of each Series shall further be subject to redemption prior to maturity at the option of the Authority at such times and upon such terms as shall be fixed by such Supplemental Indenture. If fewer than all of the Bonds of any one maturity of a Series shall be called for redemption, the particular Bonds or portions thereof, as determined in accordance with Section 3.7 herein, to be redeemed shall be selected by the Trustee in such manner as the Trustee, in its discretion, may deem proper in order to assure each Registered Owner of Bonds of such Series or maturity a fair opportunity to have their Bond or Bonds or portions thereof selected.

Section 3.4. Notice of Redemption.

(a) In the event any of the Bonds are to be redeemed, the Bond Registrar shall cause notice to be given as provided in this Section 3.4. Unless otherwise specified in the Supplemental Indenture authorizing the issuance of the applicable Series of Bonds, notice of such redemption (i) shall be filed with the paying agent designated for the Bonds being redeemed; and (ii) shall be mailed by first class mail, postage prepaid, to all Registered Owners of Bonds to be redeemed at their addresses as they appear on the registration books of the Bond Registrar at least thirty (30) days but not more than sixty (60) days prior to the date fixed for redemption. Such notice shall state the following information:

(i) the complete official name of the Bonds, including Series, to be redeemed, the identification numbers of Bonds and the CUSIP numbers, if any, of the Bonds being redeemed, provided that any such notice shall state that no representation is made as to the correctness of CUSIP numbers either as printed on such Bonds or as contained in the notice of redemption and that reliance may be placed only on the identification numbers contained in the notice or printed on such Bonds;

(ii) any other descriptive information needed to identify accurately the Bonds being redeemed, including, but not limited to, the Original Issue Date of, and interest rate on, such Bonds;

(iii) in the case of partial redemption of any Bonds, the respective principal amounts thereof to be redeemed;

(iv) the date of mailing of redemption notices and the redemption date;

(v) the redemption price;

(vi) that on the redemption date the redemption price will become due and payable upon each such Bond or portion thereof called for redemption, and that interest thereon shall cease to accrue from and after said date; and

(vii) the place where such Bonds are to be surrendered for payment of the redemption price, designating the name and address of the redemption agent with the name of a contact person and telephone number.

(b) In addition to the foregoing, further notice of any redemption of Bonds hereunder shall be given by the Trustee, to at least one national information service that disseminates notices of redemption of obligations such as the Bonds (which may be the Electronic Municipal Market Access System). Such further notice shall contain the information required in clause (a) above. Failure to give all or any portion of such further notice shall not in any manner defeat the effectiveness of a call for redemption.

(c) Upon the payment of the redemption price of Bonds being redeemed, each check or other transfer of funds issued for such purpose shall bear the CUSIP number, if any, identifying, by issue and maturity, of the Bonds being redeemed with the proceeds of such check or other transfer.

(d) If at the time of mailing of any notice of redemption there shall not be on deposit with the Trustee moneys sufficient to redeem all the Bonds called for redemption, such notice shall state that such redemption is subject to the deposit of the redemption moneys with the Trustee not later than the opening of business on the redemption date and that such notice shall be of no effect unless such moneys are so deposited.

(e) A second notice of redemption shall be given, not later than ninety (90) days subsequent to the redemption date, to Registered Owners of Bonds or portions thereof redeemed but who failed to deliver Bonds for redemption prior to the 60th day following such redemption date. Any notice mailed shall be conclusively presumed to have been duly given, whether or not the owner of such Bonds receives the notice. Receipt of such notice shall not be a condition precedent to such redemption, and failure so to receive any such notice by any of such registered Owners shall not affect the validity of the proceedings for the redemption of the Bonds.

(f) In case any Bond is to be redeemed in part only, the notice of redemption which relates to such Bond shall state also that on or after the redemption date, upon surrender of such Bond, a new Bond in principal amount equal to the unredeemed portion of such Bond will be issued.

Section 3.5. Redemption Payments. On or prior to the date fixed for redemption, moneys shall be deposited by the Authority with the Trustee to pay to the Paying Agent, and the Paying Agent is hereby authorized and directed to apply such moneys to the payment of the Bonds, or portions thereof called, together with accrued interest thereon to the redemption date, and any required premium. Upon the giving of notice and the deposit of moneys for redemption with the Paying Agent, interest on the Bonds or portions thereof thus called shall no longer accrue after the date fixed for

redemption and said Bonds shall cease to be entitled to any lien, benefit or security under the Indenture or the Security Documents, and the Bondholders of said Bonds shall have no rights in respect thereof except to receive payments of the redemption price thereof. Unless otherwise specified in a Supplemental Indenture, no payment shall be made by the Paying Agent upon any Bond or portion thereof called for redemption until such Bond or portion thereof shall have been delivered for payment or cancellation or the Trustee shall have received the items required by Section 2.6 hereof with respect to any mutilated, lost, stolen or destroyed Bond.

Section 3.6. Cancellation. All Bonds which have been redeemed shall not be reissued but shall be canceled and destroyed by the Trustee in accordance with Section 2.9 hereof.

Section 3.7. Partial Redemption of Bonds. Unless otherwise specified in the Supplemental Indenture authorizing the issuance of the applicable Series of Bonds, in case any registered Bond shall be redeemed in part only, upon the presentation of such Bond for such partial redemption, the Authority shall execute and the Trustee shall authenticate and shall deliver or cause to be delivered to or upon the written order of the Registered Owner thereof, at the expense of the Authority, a Bond or Bonds of the same Series, interest rate and maturity, in aggregate principal amount equal to the unredeemed portion of such registered Bond. If less than all of the applicable Series of Bonds of any maturity are to be redeemed, the particular Bond or portion of Bonds of such maturity to be redeemed will be selected at random by the Bond Registrar in such manner as the Bond Registrar in its discretion may deem fair and appropriate. Unless otherwise provided by Supplemental Indenture, a portion of any Bond of a denomination of more than $5,000 to be redeemed will be in the principal amount of $5,000 or an integral multiple thereof and in selecting portions of such Bonds for redemption, the Trustee will treat each such Bond as representing that number of Bonds of $5,000 denomination which is obtained by dividing the principal amount of such Bonds by $5,000.

ARTICLE IV

GENERAL COVENANTS

Section 4.1. Payment of Principal and Premium, if any, and Interest. The Authority covenants that it will promptly pay the principal of and premium, if any, and interest on every Bond issued under this Indenture at the place, on the dates and in the manner provided herein and in the Bonds according to the true intent and meaning thereof, but solely from the Trust Estate created by the Indenture, including the Base Rentals and, if paid by the City under the Master Lease, the Purchase Option Price with respect to a Project or Projects, and other amounts pledged therefor which are from time to time held by Trustee in the Bond Fund and the Debt Service Reserve Fund. The principal of and premium, if any, and interest on the Bonds are payable solely from the Trust Estate created by the Indenture, including the Base Rentals and, if paid by the City under the Master Lease, the Purchase Option Price with respect to a Project or Projects, and other amounts derived from the lease of the Projects and otherwise as provided herein, in the Security Documents, and in the Master Lease, which amounts are hereby specifically pledged to the payment thereof in the manner and to the extent herein and in the Master Lease specified, and nothing in the Bonds or in the Indenture shall be construed as pledging any other funds or assets of the Authority or the City. The Authority shall in no event be liable for the payment of the principal of and premium, if any, or interest on any of the Bonds or for the performance of any pledge, obligation or agreement undertaken by the Authority except to the extent that the moneys, properties, interests and assets constituting the Trust Estate are sufficient therefor.

Section 4.2. Performance of Covenants; Due Authority. The Authority covenants that it will faithfully perform at all times any and all covenants, undertakings, stipulations and provisions on its part contained in the Indenture, in the Master Lease, in the Security Documents, in any and every Bond executed, authenticated and delivered hereunder and in all of its proceedings pertaining hereto. The Authority represents and warrants that it is duly authorized under its Articles of Incorporation, the Constitution and laws of the State, including the Act, to issue the Bonds authorized hereby and to execute the Indenture, to assign the Master Lease and to pledge the Base Rentals, the Purchase Option Price and other amounts hereby pledged in the manner and to the extent herein set forth, that all action required on its part for the issuance of the Bonds and the execution and delivery of the Master Lease, the Security Documents and the Indenture has been duly and effectively taken, and that the Bonds are and will be valid and enforceable special, limited obligations of the Authority according to the terms thereof and hereof.

Section 4.3. Ownership; Instruments of Further Assurance. The Authority covenants that it will own the Projects, and any property becoming a part of the Projects shall be acquired and kept, free of all liens and encumbrances, except Permitted Encumbrances. The Authority will defend the title to and interest in the Projects and each part thereof to the Trustee, for the benefit of the Bondholders against the claims and demands of all persons whomsoever, except for claims and demands arising from Permitted Encumbrances as provided in the Master Lease. The Authority will do, execute, acknowledge and deliver or cause to be done, executed, acknowledged and

delivered such Supplemental Indentures and such further acts, instruments and transfers as the Trustee may reasonably require for the better assuring, transferring, conveying, pledging, assigning and confirming unto the Trustee the Projects, the Base Rentals, Purchase Option Price and other amounts pledged hereby to the payment of the principal of and premium, if any, and interest on the Bonds. The Authority, except as herein and in the Master Lease or Security Documents provided, will not sell, convey, mortgage, encumber or otherwise dispose of any part of the Projects or the Base Rentals, the Additional Rentals, the Purchase Option Price, the revenues and receipts therefrom or its rights under the Master Lease, together with any additions thereto and substitutions therefor, subject to Permitted Encumbrances.

Section 4.4. Perfection of Security Interest. The Indenture creates a valid and binding pledge and assignment of and security interest in all of the personal property pledged as part of the Trust Estate held by the Trustee under the Indenture in favor of the Trustee as security for payment of the Bonds, enforceable by the Trustee in accordance with the terms thereof. Under the laws of the State, such pledge and assignment and security interest is automatically perfected by Section 11-14-501, Utah Code Annotated 1953, as amended, and is and shall be prior to any judicial lien hereafter imposed on the personal property pledged as part of the Trust Estate to enforce a judgment against the Authority on a simple contract.

Section 4.5. Inspection of Project Books. All books and records of the Authority wherever located relating to the Projects and the Base Rentals, the Additional Rentals, Purchase Option Price and other amounts derived from the Projects shall at all reasonable times be open to inspection by such accountants or other agents as the Trustee may from time to time designate.

Section 4.6. List of Bondholders. The Trustee shall keep a list of names and addresses of the Bondholders as from time to time registered on the registration books of the Authority maintained by the Trustee as Bond Registrar, together with the principal amount and numbers of such Bonds. At reasonable times and under reasonable regulations established by the Trustee, said list may be inspected and copied by the City or by Bondholders (or a designated representative thereof) of 15% or more in aggregate principal amount of Bonds then Outstanding, such ownership and the authority of such designated representative to be evidenced to the satisfaction of the Trustee.

Section 4.7. Rights Under Master Lease. The Master Lease, a duly executed counterpart of which has been filed with the Trustee, sets forth the covenants and obligations of the Authority and the City, including provisions that, subsequent to the issuance of Bonds and prior to their payment in full or provision for payment thereof in accordance with the provisions hereof, the Master Lease may not be effectively amended, changed, modified or altered without the written consent of the Trustee, and reference is hereby made to the same for a detailed statement of said covenants and obligations of the Authority and the City thereunder, and the Authority agrees that the Trustee in its name or in the name of the Authority may but shall not be obligated to enforce all rights of the Authority and all obligations of the City under and pursuant to the Master Lease for and on behalf of the Bondholders, whether or not the Authority is in default hereunder.

Section 4.8. Payment of Taxes, Charges, Insurance, etc. The Authority shall cause the City pursuant to the Master Lease to maintain certain insurance and pay all lawful taxes, assessments and charges at any time levied or assessed against or with respect to the Projects, the Base Rentals, the Additional Rentals, the Purchase Option Price, the Net Proceeds and any and all other amounts held pursuant to the Indenture, or any part thereof, which might impair or prejudice the lien and property of the Indenture; provided, however, that nothing contained in this Section 4.8 shall require the maintenance of insurance or payment of any such taxes, assessments or charges if the same are not required to be maintained or paid under the provisions of the Master Lease. The Authority shall maintain such insurance and pay such taxes, assessments and charges to the same extent as provided in the Master Lease as if said Article were herein set forth in full, if and to the extent that the City fails to maintain such insurance or pay such taxes, assessments or charges, but the liability hereby imposed on the Authority shall only be paid from the Trust Estate as herein provided.

Section 4.9. Maintenance and Repair. Pursuant to the Master Lease, the City has agreed at its own expense to maintain, manage and operate the Projects in good order, condition and repair, and the City may, at its own expense, make from time to time additions, modifications or improvements to the Projects under the terms and conditions set forth in the Master Lease.

Section 4.10. Warranty. The Authority has the right, power and authority to grant a mortgage lien on the Projects to the Trustee pursuant to the Security Documents and to pledge and assign a security interest in the Trust Estate to the Trustee pursuant to the Indenture, all for the uses and purposes herein set forth. The Authority warrants that there is no financing statement or other filed or recorded instrument in which the Authority is named as, or which the Authority has signed as, debtor now on file in any public office covering any of the Trust Estate excepting the financing statements or other instruments filed or to be filed in respect of and for the security interest provided for herein, or financing statements to be released in connection with the issuance of Bonds and that the lien and security interest herein created have been duly perfected and are prior to any other (other than the Permitted Encumbrances).

Section 4.11. Further Assurances. The Authority will, at the City's expense, do, execute, acknowledge and deliver all and every act, deed, conveyance, transfer and assurance necessary or proper for the perfection of the lien and security interest being herein provided for in the Trust Estate, whether now owned or held or hereafter acquired, including, but not limited to, such financing statements and continuation statements as shall be necessary under applicable law to perfect and maintain the security interest being herein provided for in the Trust Estate.

Section 4.12. Actions with Respect to Trust Estate. The Authority will not:

(a) Declare a default or exercise the remedies of the seller or lessor, as the case may be, under, or terminate, modify or accept a surrender of, or offer or agree to any termination, waiver, modification or surrender of, the Master Lease (except as otherwise expressly provided herein) or by affirmative act consent to the creation or existence of any lien or encumbrance (other than the security interest and lien of this Indenture and the Security Documents) to secure the payment of indebtedness upon the leasehold or other estate created by the Master Lease or any part of any thereof; or

(b) Receive or collect or permit the receipt or collection of any payment under the Master Lease prior to the date for the payment thereof provided for by the Master Lease or assign, transfer or hypothecate (other than to the Trustee hereunder) any revenues or other payment then due or to accrue in the future under the Master Lease in respect of the Projects; or

(c) Sell, mortgage, transfer, assign or hypothecate (other than to the Trustee hereunder) its interest in the Projects or any part thereof or interest therein or in any amount to be received by it from the disposition of the Projects except as herein provided under Article IX, and except as provided in the Master Lease and the Security Documents.

Section 4.13. Power of Attorney in Respect of the Master Lease. The Authority does hereby irrevocably constitute and appoint the Trustee its true and lawful attorney with an interest and full power of substitution, for it and in its name, place and stead (a) to ask, demand, collect, receive and receipt for any and all rents, income and other sums which are assigned under the Granting Clauses hereof, and (b) without limiting the provisions of the foregoing clause (a) hereof, during the continuance of any Event of Default under the Indenture, to exercise any remedies available under the Master Lease and the Security Documents as fully as the Authority could itself do, and to perform all other necessary or appropriate acts with respect to any such remedies, and in its discretion to file any claim or take any other action or proceedings, either in its own name or in the name of the Authority or otherwise, which the Trustee may deem necessary or appropriate to protect and preserve the right, title and interest of the Trustee (but only to the extent specifically provided herein) in the Master Lease and to the Base Rentals, the Additional Rentals, the Purchase Option Price, the Net Proceeds and all other amounts payable under the Master Lease and other sums and the security intended to be afforded hereby, whether or not the Authority is in default hereunder.

ARTICLE V

REVENUES AND FUNDS

Section 5.1. Source of Payment of Bonds. The Bonds herein authorized and all payments by the Authority hereunder are not general obligations of the Authority but are special, limited obligations of the Authority payable solely as provided in Section 2.3 hereof.

The Projects have been leased under the Master Lease and the Base Rentals and the Purchase Option Price provided for in Sections 6.2 and 12.1, respectively, of the Master Lease are to be remitted directly to the Trustee for the account of the Authority and deposited in the Bond Fund and the Debt Service Reserve Fund along with all other moneys authorized or required to be deposited in the Bond Fund and Debt Service Reserve Fund under the Master Lease. Such Base Rentals and the Purchase Option Price are hereby pledged to such payment. Said pledge shall constitute a first and exclusive lien on the Base Rentals and the Purchase Option Price provided in the Master Lease for the payment of the principal of, and premium, if any, and interest on, the Bonds in accordance with the terms hereof and thereof.

Section 5.2. Creation of Bond Fund. There is hereby created by the Authority and ordered established in the custody of the Trustee a special trust fund to be designated "Municipal Building Authority of West Valley City, Utah, Bond Fund" (herein defined as the "Bond Fund"), which shall be used to pay the principal of and premium, if any, and interest on the Bonds.

Section 5.3. Creation of Sinking Fund Account. There is hereby created by the Authority and ordered established in the custody of the Trustee a separate account within the Bond Fund to be designated "Municipal Building Authority of West Valley City, Utah, Sinking Fund Account" (herein defined as the "Sinking Fund Account").

Section 5.4. Creation of Debt Service Reserve Fund. There is hereby created by the Authority and ordered established in the custody of the Trustee a special trust fund to be designated "Municipal Building Authority of West Valley City, Utah, Debt Service Reserve Fund." By Supplemental Indenture, there may be established within the Debt Service Reserve Fund a separate account for each Series of Bonds. (Said Debt Service Reserve Fund and applicable accounts therein are herein referred to as the "Debt Service Reserve Fund.")

Section 5.5. Creation of Construction Fund. There is hereby created by the Authority and ordered established in the custody of the Trustee a special trust fund to be designated "Municipal Building Authority of West Valley City, Utah, Construction Fund." There is hereby created and ordered established in the custody of the Trustee a separate account within the Construction Fund for each Series of Bonds. (Said Construction Fund and applicable accounts therein are herein referred to as the "Construction Fund.")

Section 5.6. Creation of Rebate Fund. There is hereby created by the Authority and ordered established in the custody of the Trustee a special trust fund to be designated "Municipal Building Authority of West Valley City, Utah, Rebate Fund" (herein defined as the "Rebate Fund").

Section 5.7. Creation of Funds. Notwithstanding anything contained herein to the contrary, the Trustee need not create any of the funds or accounts referenced in this Article V until such funds or accounts shall be utilized as provided in a Supplemental Indenture authorizing a Series of Bonds. By Supplemental Indenture the Authority may authorize the creation of additional funds and accounts within any funds.

Section 5.8. Use of Bond Fund.

(a) There shall be deposited into the Bond Fund all accrued interest received, if any, at the time of the issuance, sale and delivery of the Bonds. In addition, there shall be deposited into the Bond Fund, as and when received, (i) any amount directed to be paid into the Bond Fund pursuant to the Master Lease or any amount in the Debt Service Reserve Fund directed to be paid into the Bond Fund in accordance with the provisions of Section 5.10 hereof; (ii) any Net Proceeds of any insurance policy, performance bond or condemnation award to be deposited in the Bond Fund pursuant to the Master Lease; (iii) all Base Rentals, and, if paid by the City, that portion of the Purchase Option Price attributable to the retirement of the applicable Series of Bonds issued hereunder, as specified in the Master Lease; and (iv) any Direct Payments and all other moneys received by the Trustee under and pursuant to any of the provisions hereof or of the Master Lease which are required or which are accompanied by directions that such moneys are to be paid into the Bond Fund. The Authority hereby covenants and agrees that so long as any of the Bonds issued hereunder are Outstanding it will deposit, or cause to be paid to the Trustee for deposit in the Bond Fund for its account, any moneys which are pledged under this Indenture for the payment of the principal of and premium, if any, and interest on the Bonds and which are required to be deposited into the Bond Fund.

(b) Except as provided in Section 5.15 herein, moneys in the Bond Fund shall be used solely for the payment of the principal of and premium, if any, and interest on the Bonds and for the redemption of the Bonds prior to maturity.

(c) The Bond Fund shall be in the custody of the Trustee but in the name of the Authority, and the Authority hereby authorizes and directs the Trustee to withdraw sufficient funds from the Bond Fund to pay the principal of and premium, if any, and interest on the Bonds as the same become due and payable, which authorization and direction the Trustee hereby accepts.

Section 5.9. Use of Sinking Fund Account.

(a) As required by Supplemental Indenture, the Trustee shall apply moneys in the Sinking Fund Account to the retirement of any Term Bonds

required to be retired by operation of the Sinking Fund Account under the provisions of and in accordance with the Supplemental Indenture authorizing the issuance of such Term Bonds, either by redemption in accordance with such Supplemental Indenture or, at the direction of the Authority, purchase of such Term Bonds in the open market prior to the date on which notice of the redemption of such Term Bonds is given pursuant hereto, at a price not to exceed the redemption price of such Term Bonds (plus accrued interest which will be paid from moneys in the Bond Fund other than those in the Sinking Fund Account). Sinking Fund Installments may also be collected in the Sinking Fund Account without redemption of Bonds prior to maturity.

(b) On the maturity date of any Term Bonds, the Trustee shall apply the moneys on hand in the Sinking Fund Account for the payment of the principal of such Term Bonds.

Section 5.10. Use of Debt Service Reserve Fund

(a) Except as otherwise provided in this Section, moneys in accounts within the Debt Service Reserve Fund shall at all times be maintained in an amount not less than the Debt Service Reserve Requirement. In calculating the amount on deposit in each account of the Debt Service Reserve Fund, the amount of the Reserve Instrument Coverage will be treated as an amount on deposit therein. Each Supplemental Indenture authorizing the issuance of a Series of Bonds shall specify that the amount, if any, of the Debt Service Reserve Requirement applicable to such Series which shall be deposited immediately upon the issuance and delivery of such Series either from (a) proceeds from the sale thereof or from any other legally available source or may be built up over time as provided by the Supplemental Indenture. Funds on deposit in accounts within the Debt Service Reserve Fund shall be used only to make up any deficiencies in accounts within the Bond Fund with respect to the related Series of Bonds, or (b) by a Reserve Instrument, or (c) any combination thereof.

(b) If on any Interest Payment Date the moneys held in the Bond Fund are insufficient to pay all interest, premium, if any, and principal then becoming due on the Bonds of a Series for which an account of the Debt Service Reserve Fund has been established, the Trustee shall transfer, on or before such date, moneys from the applicable accounts within the Debt Service Reserve Fund to the Bond Fund to the extent necessary so that the amount of money so transferred plus all moneys then held in the Bond Fund for such Series of Bonds shall be sufficient to pay all interest, premium, if any, and principal payments then becoming due and payable on such date;

(c) In the event funds on deposit in the Debt Service Reserve Fund are needed to make up any deficiencies in the Bond Fund as aforementioned, and there is insufficient cash available in an account of the Debt Service Reserve Fund to make up such deficiency and a Reserve Instrument applicable to such Series of Bonds is in effect, the Trustee shall immediately make a demand for payment on

such Reserve Instrument, to the maximum extent authorized by such Reserve Instrument, in the amount necessary to make up such deficiency, and immediately deposit such payment upon receipt thereof into the Bond Fund. Thereafter, the Authority shall be obligated to reinstate the Reserve Instrument from Base Rentals received from the City under Section 6.2 of the Master Lease.

(d) No Reserve Instrument shall be allowed to expire or terminate while the related Series of Bonds is Outstanding unless and until cash has been deposited into the related account of the Debt Service Reserve Fund, or a new Reserve Instrument has been issued in place of the expiring or terminating Reserve Instrument, or any combination thereof in an amount or to provide coverage, as the case may be, at least equal to the amount required.

(e) In the event that the City shall exercise its option to purchase a Project or Projects and terminate its payment obligations under the Master Lease upon payment of the Purchase Option Price with respect to said Project or Projects, the Trustee shall transfer all moneys held in the Debt Service Reserve Fund applicable to said Project or Projects to the Bond Fund in accordance with the written direction of the City.

(f) In the event moneys are drawn from the related account of the Debt Service Reserve Fund to pay principal, premium or interest on the related Series of Bonds, such that there shall be remaining in said account an amount less than the Debt Service Reserve Requirement, the Trustee shall immediately give notice to the Authority and the City of such deficiency. Such account shall be replenished to the Debt Service Reserve Requirement upon the deposit by the Trustee of the additional Base Rental payment to be paid by the City pursuant to the Master Lease.

(g) Any moneys remaining in the related account of the Debt Service Reserve Fund with respect to a Series of Bonds on the final maturity of said Series of Bonds (whether at stated maturity or upon prior redemption) shall be transferred on such date into the Bond Fund.

(h) If, following the payment of principal and interest due on a Series of Bonds on each Interest Payment Date, the moneys held in the related account of the Debt Service Reserve Fund exceed the related Debt Service Reserve Requirement, all moneys in excess of said sum shall be immediately transferred to the Bond Fund. To the extent so paid, such excess shall reduce the amount of the succeeding Base Rental otherwise payable under the Master Lease.

(i) Moneys at any time on deposit in an account of the Debt Service Reserve Fund shall be used to make up deficiencies in the Bond Fund only for the Series of Bonds secured by said account and any Reserve Instrument shall only be drawn upon with respect to the Series of Bonds for which such Reserve Instrument was obtained.

Section 5.11. Use of Construction Fund; Disbursements.

(a) The moneys in the Construction Fund shall be expended in accordance with the provisions of the Master Lease and the Supplemental Indenture authorizing such Series of Bonds.

(b) The Authority covenants and agrees to take all necessary and appropriate action promptly in approving and ordering disbursements from the Construction Fund in accordance with provisions of the Master Lease. The Trustee is hereby authorized and directed to make each disbursement so requested by the City on behalf of the Authority and to issue its checks therefor, but only in compliance with the provisions of the Master Lease. The Trustee shall keep and maintain adequate records pertaining to each account within the Construction Fund and all disbursements therefrom, and after the related Project has been completed and a certificate of payment of all costs is, or has been, filed as provided in Section 7.4 of the Master Lease, the Trustee shall file an account thereof with the Authority and the City.

Section 5.12. Completion of Project. Any balance remaining in the Construction Fund following the establishment of the Completion Date for a Project pursuant to the Master Lease (except amounts the City shall have directed the Trustee to retain for any Cost of Acquisition and Construction not then due and payable) shall at the direction of the City and the Authority, be used as provided in the related Supplemental Indenture.

Section 5.13. Rebate Fund and Arbitrage Rebate.

(a) When directed in writing to do so by the Authority, the Trustee shall establish and thereafter maintain, so long as the Bonds are Outstanding, a Rebate Fund and an account therein for each such Series, which shall be held separate and apart from all other funds and accounts established under the Indenture and from all other moneys of the Trustee.

(b) All amounts in the Rebate Fund, including income earned from investment of the fund, shall be held by the Trustee free and clear of the lien of the Indenture. In the event the amount on deposit in the Rebate Fund exceeds the aggregate amount of Rebatable Arbitrage for all Series of Bonds, as verified in writing by an independent public accountant or other qualified professional at the time the Rebatable Arbitrage is determined, less amounts of Rebatable Arbitrage theretofore paid to the United States for all Series of Bonds, the Trustee shall, upon the Authority's request, withdraw from the Rebate Fund and pay to the Authority an amount not to exceed such excess.

(c) The Authority shall determine the amount of Rebatable Arbitrage and the corresponding Required Rebate Deposit with respect to each Series of Bonds on each applicable Rebate Calculation Date. The Authority shall deposit into the Rebate Fund the Required Rebate Deposit, if any, with respect to each Series of Bonds (or instruct the Trustee to transfer to the Rebate Fund moneys

representing such Required Rebate Deposit from the Funds and Accounts held under the Indenture other than the Rebate Fund) within 30 days of each such Rebate Calculation Date. The Authority shall instruct the Trustee to withdraw from the Rebate Fund and pay over to the United States Government with respect to each Series of Bonds: (1) not less frequently than once each five years commencing no later than 60 days after the first Rebate Calculation Date for such Series of Bonds and upon each fifth anniversary of such date, an amount which when added to all previous rebate payments made with respect to such Series of Bonds equals 90% of the sum of the Rebatable Arbitrage pertaining to such Series of Bonds, and (2) not later than 60 days after the retirement of the last Bond of such Series, 100% of the Rebatable Arbitrage with respect to such Series. The determination of Rebatable Arbitrage made with respect to each such payment date and with respect to any withdrawal and payment to the Authority from the Rebate Fund pursuant to the Indenture must be verified in writing by an independent public accountant or other qualified professional.

(d) The Trustee shall, at least 60 days prior to each Rebate Calculation Date, notify the Authority and the City of the requirements of this Section. By agreeing to give this notice, the Trustee assumes no responsibility whatsoever for compliance by the Authority with the requirements of Section 148 of the Code or any successor. The Authority expressly agrees that (notwithstanding any other provision of the Indenture) any failure of the Trustee to give any such notice, for any reason whatsoever, shall not cause the Trustee to be responsible for any failure of the Authority to comply with the requirements of said Section 148 or any successor thereof.

(e) The Trustee, on behalf of the Authority shall keep and retain, until the date six years after the retirement of the last of the Bonds of each series, records with respect to each Series of the Bonds and the investment and expenditure of proceeds thereof to comply with the arbitrage rebate requirements of this Section, including without limitation a complete list of all investments and reinvestments of proceeds of each Series of the Bonds. For purposes of the computation required by this Section, the Trustee shall upon request, furnish to the Authority all information in the Trustee's control which is necessary for such computations.

(f) The Authority hereby covenants and agrees that it will not enter into any transaction or cause any transaction to be entered into with respect to the investment of proceeds of the Bonds, or otherwise, which reduces the amount which may be required to be paid to the United States pursuant to the arbitrage rebate requirements specified hereinabove, because such transaction results in a smaller profit or a larger loss than would have resulted if the transaction had been at arm's length and had the yield on each Series of the Bonds not been relevant to either party.

(g) The provisions of this Section may be amended or deleted, with respect to any or all Series of the Bonds, from this Indenture upon receipt by the

Authority and the Trustee of an opinion of nationally recognized bond counsel that such amendment or deletion will not adversely affect (i) the exclusion from gross income of interest in the case of Tax-Exempt Bonds or (ii) the qualification of the Bonds for tax credits or Direct Payments in the case of Tax Credit Bonds.

Section 5.14. Moneys to be Held in Trust. All moneys required to be deposited with or paid to the Trustee for account to any fund referred to in any provision of the Indenture or the Master Lease shall be held by the Trustee in trust, and except for moneys deposited with or paid to the Trustee for the payment of Bonds not then deemed Outstanding shall, while held by the Trustee, constitute part of the Trust Estate and be subject to the lien or security interest created hereby.

Section 5.15. Repayment to the City from Bond Fund or Debt Service Reserve Fund. Any amounts remaining in the Bond Fund or the applicable account within the Debt Service Reserve Fund after payment in full of the principal of and premium, if any, and interest on the Bonds of a Series, the fees, charges and expenses of Trustee and all other amounts required to be paid hereunder shall be paid immediately to the City as an overpayment of Base Rentals or Additional Rentals. In the event that Direct Payments are deposited with the Trustee after the City has made the related payment of Base Rentals, the City may elect to have the Trustee return to the City an amount equal to such Direct Payments or to have the Trustee retain the Direct Payments in the Bond Fund and take the credit with respect to the next required Base Rentals payment.

Section 5.16. Custody of Separate Trust Fund. The Trustee is authorized and directed to establish a separate trust fund after the Completion Date to hold all Net Proceeds from any insurance policies, performance bonds or condemnation awards and disburse such proceeds in accordance with the Master Lease, or if the City directs that the Net Proceeds be applied to redeem Bonds pursuant to the Master Lease, the Authority covenants and agrees to transfer all of the Net Proceeds in such fund to the Bond Fund and to redeem the Bonds as provided in the Indenture.

Section 5.17. Cost of Issuance Account. The Trustee shall establish a Cost of Issuance Account, into which shall be deposited upon delivery of a Series of Bonds, sufficient moneys to pay costs of issuance of such Series of Bonds. The Trustee shall disburse said moneys upon receipt of written authorization to pay costs of issuance executed by an Authority Representative. Any remaining moneys on deposit therein after payment in full of all costs of issuance shall be transferred by the Trustee to the Bond Fund.

Section 5.18. Creation of Reserve Instrument Fund.There is hereby created and ordered established in the custody of the Trustee a special trust fund to be designated the "Municipal Building Authority of West Valley City, Utah Reserve Instrument Fund" (herein defined as the "Reserve Instrument Fund"). By Supplemental Indenture, there may be established within the Reserve Instrument Fund a separate account for each Series of Bonds.

Section 5.19. Use of Reserve Instrument Fund. There shall be paid into the Reserve Instrument Fund the amounts required hereby and by a Supplemental Indenture to be so paid. The amounts in the Reserve Instrument Fund shall, from time to time, be applied by the Trustee on behalf of the Authority to pay the amounts which are due and payable to any Reserve Instrument Provider under any applicable Reserve Instrument Agreement.

ARTICLE VI

INVESTMENT OF MONEYS

Section 6.1. Trustee to Invest Funds. The City will direct the Trustee in investing amounts held in the funds created hereunder. Any moneys held as part of the Construction Fund, the Bond Fund, the Debt Service Reserve Fund, the Rebate Fund or any other fund shall be invested and reinvested by the Trustee in Investment Obligations at the written direction of the City in accordance with the provisions hereof and the Master Lease. Any such investments shall be held by or under the control of the Trustee. The Trustee shall sell and reduce to cash a sufficient amount of such investments within the Bond Fund whenever the cash balance therein is insufficient to pay the principal of and premium, if any, and interest on the Bonds when due. All income and earnings from the investment of amounts on deposit in any fund shall be retained therein; provided, however, that any moneys held in the Debt Service Reserve Fund in excess of the Debt Service Reserve Requirement shall be transferred to the Bond Fund at least annually.

Section 6.2. Method of Valuation and Frequency of Valuation. In computing the amount in any Fund or account, Investment Obligations shall be valued at the fair market value of such Obligations, exclusive of accrued interest. All funds and accounts are to be valued on the basis of a market valuation conducted annually by the Trustee.

ARTICLE VII

RIGHTS OF THE CITY

Section 7.1. Subordination of Master Lease to Indenture; Certain Rights to City. As provided in the Master Lease, the Master Lease and the City's interest in the Projects and its interest as lessee under the Master Lease shall at all times be subject to the lien of the Indenture; provided, however, that so long as no Event of Default hereunder or an Event of Nonappropriation has occurred and is then continuing, the Master Lease shall remain in full force and effect notwithstanding such subordination, and the City shall not be disturbed by the Authority or the Trustee in its possession, use and enjoyment of the Projects during the term of the Master Lease or in the enjoyment of its rights under the Master Lease; provided further that this Indenture and the rights and privileges hereunder of the Trustee and Bondholders are specifically made subject and subordinate to the rights and privileges of the City set forth in the Master Lease to exercise its option to purchase the Projects in the event of, and subsequent to, the occurrence of an Event of Default, but prior to the liquidation of the Authority's interest in the Projects. As a condition of the exercise of such option, the City under the Master Lease must pay, in addition to the Purchase Option Price, any interest payment deficiencies accruing from the date of the Event of Default or Event of Nonappropriation. The Trustee agrees that it shall execute and deliver any instrument necessary or appropriate at any time to confirm, evidence or enable the City to enjoy such rights and privileges, including without limitation, those referred to in Section 7.2 hereof.

Section 7.2. Granting of Rights in and to the Projects. Reference is made to the provisions of the Master Lease, whereby the Authority and the City have reserved the right to grant rights in and to certain portions of the Projects and to withdraw portions of the Projects from the terms of the Master Lease and the lien of this Indenture and the Security Documents upon compliance with the terms and conditions of the Master Lease.

Section 7.3. Release of Equipment Forming a Part of the Projects. Reference is made to the provisions of the Master Lease, whereby the City, may withdraw certain items of equipment forming a part of the Projects upon substitution of other property of comparable or greater value, or upon deposit of sale proceeds in the Bond Fund, in conformity with the terms and conditions of the Master Lease.

Section 7.4. Release of Portions of Project Upon Payment of Related Series of Bonds. Pursuant to the Master Lease the City has been granted the option of purchasing a Project in advance of the final maturity of the related Series of Bonds. So long as no Event of Default shall have occurred and be continuing under the Indenture and so long as no Event of Default or Event of Nonappropriation shall have occurred and be continuing under the Master Lease, a Project may be released from the lien created with respect to the related Series of Bonds and the Indenture and the Master Lease and transferred to the City if (a) the City shall deposit with the Trustee the Purchase Option Price for such Project; and (b) if any of the related Series of the Bonds are Tax-Exempt Bonds or one or more Series of Bonds are Tax Credit Bonds qualifying for Direct Payments, there shall have been delivered to the Trustee an opinion of nationally

recognized bond counsel to the effect that the release of the Project will not adversely affect the excludability of interest on said Bonds, if applicable, from the federal gross income of the owners thereof or affect the status of the Bonds as Tax Credit Bonds qualifying for Direct Payments.

For purposes of this Section 7.4 the Authority may, in the Supplemental Indenture authorizing a Series of Bonds, designate a subseries of such Series of Bonds with respect to any discreet portion of a Project financed with such Series of Bonds and in the Master Lease or an amendment to Master Lease provide for a separate schedule of Base Rental payments and Purchase Option Price for such subseries. The City shall be entitled to the option to purchase such discreet portion of a Project upon payment of the related Purchase Option Price for such portion of the Project and compliance with the provisions of the preceding paragraph.

ARTICLE VIII

DISCHARGE OF LIEN

If the Authority shall pay or cause to be paid, or there shall be otherwise paid or unconditional provisions for payment made to or for the Bondholders, the principal of and premium, if any, and interest due or to become due on the Bonds at the times and in the manner stipulated therein, and shall pay or cause to be paid to the Trustee and any paying agents and all Reserve Instrument Providers all sums of money due or to become due according to the provisions hereof and any Supplemental Indenture (including any make whole interest payment or redemption premiums), then these presents and the estate and rights hereby granted shall cease, terminate and be void, whereupon the Trustee shall cancel and discharge the lien of the Indenture, and release, assign and deliver unto the Authority and the City any and all the estate, right, title and interest in and to any and all rights assigned to the Trustee or otherwise subject to the lien of the Indenture, including amounts in the Bond Fund and the Debt Service Reserve Fund and all rights granted under the Security Documents, except moneys or securities held by the Trustee for the payment of the principal of and premium, if any, and interest on the Bonds.

Any Bond shall be deemed to be paid within the meaning of this Article and for all purposes of the Indenture when (a) payment of the principal of and the applicable redemption premium, if any, on such Bond, plus interest thereon to the due date thereof (whether such due date be by reason of maturity or upon redemption as provided in the Indenture, or otherwise), either (i) shall have been made or caused to be made in accordance with the terms thereof, or (ii) shall have been provided by irrevocably depositing with or for the benefit of the Trustee, in trust, and the Trustee shall have irrevocably set aside exclusively for such payment, (1) moneys sufficient to make such payment, and/or (2) Direct Obligations maturing as to principal and interest in such amount and at such times as will insure, without reinvestment, the availability of sufficient moneys to make such payment as verified by a Certified Public Accountant, and (b) all necessary and proper fees, compensation and expenses of the Trustee and any paying agents pertaining to the Bonds with respect to which such deposit is made shall have been paid or the payment thereof provided for to the satisfaction of the Trustee. At such time as a Bond shall be deemed to be paid hereunder, as aforesaid, it shall no longer be secured by or entitled to the benefits of the Indenture, except for the purposes of any such payment from such moneys or Direct Obligations.

Notwithstanding the foregoing, no deposit under clause (a)(ii) of the immediately preceding paragraph shall be deemed a payment of such Bonds as aforesaid until: (a) proper notice of redemption of such Bonds shall have been previously given in accordance with Article III of this General Indenture, or in the event said Bonds are not by their terms subject to redemption within the next succeeding sixty days, until the Authority shall have given the Trustee, in form satisfactory to the Trustee, irrevocable instructions to notify, as soon as practicable, the Bondholders of the Bonds, in accordance with Article III hereof, that the deposit required by (a)(ii) above has been made with or for the benefit of the Trustee and that said Bonds are deemed to have been paid in accordance with this Article VIII, and stating such maturity or redemption date upon

which moneys are to be available for the payment of the principal or redemption price, if applicable, on said Bonds and to call for redemption pursuant to the Indenture any Bonds to be redeemed prior to maturity; or (b) the maturity of such Bonds.

All moneys so deposited with or for the benefit of the Trustee as provided in this Article VIII may at the direction of the Authority also be invested and reinvested in Direct Obligations, maturing in the amounts and at times as hereinbefore set forth, and all income from all Direct Obligations pursuant to this Article VIII which is not required for the payment of the Bonds and interest and premium, if any, thereon with respect to which such moneys shall have been so deposited, shall be deposited in the Bond Fund as and when realized and collected for use and application as are other moneys deposited in that fund.

The Authority hereby covenants that no deposit will be made hereunder and no use made of any such deposit which would cause the Tax-Exempt Bonds to be treated as arbitrage bonds within the meaning of Section 148 of the Code.

Notwithstanding any provision of any other Article of the Indenture which may be contrary to the provisions of this Article, all moneys or Direct Obligations set aside and held in trust pursuant to the provisions of this Article VIII for the payment of Bonds (including interest and premium thereon, if any) shall be applied to and used solely for the payment of the particular Bonds (including interest and premium thereof, if any) with respect to which such moneys and Direct Obligations have been so set aside in trust.

ARTICLE IX

DEFAULT PROVISIONS AND REMEDIES OF THE TRUSTEE AND BONDHOLDERS

Section 9.1. Events of Default. If any of the following events occur, it is hereby declared to constitute an "Event of Default" under this Indenture:

(a) Failure to pay when due interest on any Bond;

(b) Failure to pay when due the principal of, or premium, if any, on any Bond, whether at the stated maturity thereof, or upon proceedings for redemption thereof (other than the event contemplated in Section 3.4(d) herein, which shall not be an Event of Default);

(c) Failure to perform or observe any other of the covenants, agreements or conditions on the part of the Authority contained in the Indenture or in the Bonds and failure to remedy the same after notice thereof pursuant to Section 9.13 hereof;

(d) The occurrence of an event of default under the terms of any of the Bond Documents on the part of either the Authority or the City;

(e) The Authority shall for any reason be rendered incapable of fulfilling its obligations hereunder;

(f) The Authority (1) is adjudged insolvent by a court of competent jurisdiction, (2) admits in writing its inability to pay its debts generally as they become due, (3) files a petition in bankruptcy, (4) makes an assignment for the benefit of creditors, or (5) consents to the appointment of a receiver of itself or property with respect to the Projects;

(g) An order, judgment or decree shall be entered by any court of competent jurisdiction appointing, without the consent of the Authority, a receiver of the Authority or of the property with respect to the Projects, and such order, judgment or decree shall not be vacated or set aside or stayed within sixty days from the date of such appointment;

(h) A court of competent jurisdiction shall enter an order, judgment or decree approving a petition filed against the Authority under the provisions of any bankruptcy act and such order, judgment or decree shall not be vacated or set aside or stayed within sixty days from the date of entry of such order, judgment or decree;

(i) Under the provisions of any other law now or hereafter existing for the relief or aid of debtors, any court of competent jurisdiction shall assume custody or control of the Authority or of the property with respect to the Projects

or any part thereof, and such custody or control shall not be terminated within sixty days from the date of assumption of such custody or control; or

(j) Subject to the limitations contained in the Master Lease, the Authority shall unreasonably delay or fail to carry on with reasonable dispatch, or shall discontinue construction of any substantial part of a Project.

Section 9.2. Acceleration, Limitation on Remedies. Upon the occurrence and continuation of an Event of Default, the Trustee shall have all the rights and remedies with respect to the Trust Estate as the Authority, as lessor, has against the Projects and the City under the pertinent provisions of the Master Lease; and the Trustee may, and upon the written request of Bondholders of not less than 25% in aggregate principal amount of the Bonds Outstanding shall, by notice in writing delivered to the Authority, declare the principal of all Bonds then Outstanding and the interest accrued thereon immediately due and payable, and such principal and interest shall thereupon become and be immediately due and payable without further action. Such amounts of principal and interest shall bear interest from the date of acceleration, as herein provided, until paid at the same rate borne by the accelerated Bonds prior to acceleration.

Upon any sale made either under the power of sale given in this Article IX or given in the Security Documents or under a judgment, order or decree made in any judicial proceedings for the foreclosure or enforcement of this Indenture and/or the Security Documents, the principal of all Bonds then outstanding, if not previously due, shall at once become and be immediately due and payable without declaration or notice by the Trustee or the Bondholders.

Notwithstanding anything to the contrary contained in the Indenture, no deficiency judgment upon foreclosure of the lien of the Indenture or of the Security Documents against the Projects may be entered against the City or the Authority, and no breach of any provision of the Master Lease, the Security Documents or this Indenture shall impose any general obligation or liability upon or a charge against the City or the Authority or upon the general credit or taxing powers of the City. Additionally, no judgment requiring a payment of money may be entered against the City by reason of an Event of Default or an Event of Nonappropriation under the Master Lease; provided to the extent permitted by law that the Trustee may, subject to compliance with the applicable provisions of the "one action rule" set forth in Title 78B, Chapter 6, Utah Code Annotated 1953, as amended, recover from the City (a) the portion of Base Rentals and Additional Rentals which are or would otherwise have been payable under the Master Lease during any period in which the City continues to use, occupy and operate a Project or Projects or any portion thereof; and (b) Base Rentals and Additional Rentals which are or would otherwise have been payable by the City under the Master Lease during the remainder, after the City vacates the applicable Project or Projects, of the then-current annual term of the Master Lease in which such Event of Default occurs for which term the City had lawfully appropriated moneys for purposes of paying such Base Rentals and Additional Rentals; provided, however, that the Authority shall be obligated to the City to use its best efforts to lease or sublease the Project or Projects for the

remainder of such annual term, and the Net Proceeds of such leasing shall be offset against the amount recoverable from the City under this clause (b).

Notwithstanding anything contained herein to the contrary, the rights and privileges of the Trustee and the Bondholders are subject to the right of the City to purchase the Project or Projects as set forth in the Master Lease and the Trustee shall make no final sale or other final disposition of any interest in said Project or Projects pursuant to any available foreclosure remedy without notifying the City in writing of the occurrence of an Event of Default, and allowing the City ninety days from the mailing of such notice to exercise its option and purchase the Project or Projects.

Section 9.3. Surrender of Possession of Projects; Rights and Duties of Trustee in Possession. Subject to Section 9.2 hereof, upon the occurrence and continuation of an Event of Default under the Indenture, the Authority, upon demand of the Trustee, shall forthwith surrender, and it shall be lawful for the Trustee, by such officer or agent as it may appoint, to take possession of all or any part of the Projects together with the books, papers and accounts of the Authority pertaining thereto, and including the rights and the position of the Authority with respect to the Projects under the Master Lease and to make all needful repairs and improvements as the Trustee shall deem wise. Upon the occurrence and continuation of an Event of Default, the Trustee may execute a written notice of default and an election to cause the Authority's interest in the Projects or any portion thereof to be sold (subject to any reversionary rights of the City which may be retained in the Project site or sites in the event any ground lease may be executed between the Authority and the City) to satisfy the obligations of the Authority under the Indenture in accordance with the provisions of the Security Documents and/or may cause a sale of personal property as provided by law. The Trustee may also lease or otherwise dispose of the Authority's interest in the Projects in the name and for the account of the Authority and in such manner as the Trustee, in its sole discretion, may elect. In connection with any such sale or leasing of the Projects, the Trustee may collect, receive and sequester the rental payments, revenues, earnings, income, products and profits therefrom, and out of the same and any moneys received from any receiver pay, or set up the proper reserve for the payment of, all proper costs and expenses of so taking, holding, leasing, selling and managing the same, including reasonable compensation to the Trustee, its agents and counsel, and any charges of the Trustee hereunder, and any taxes and assessments and other charges prior to the lien of the Indenture and the Security Documents which the Trustee may deem it wise to pay, and all expenses of such repairs and improvements, and apply the remainder of the moneys so received in accordance with the provisions of Section 9.8 hereof. Whenever all that is due upon the Bonds shall have been paid and all defaults made, cured or waived, the Trustee shall surrender whatever possession the Trustee shall retain to the Authority; the same right of entry, however, to exist upon any subsequent Event of Default.

While in possession of such property the Trustee shall render annually to the Authority and the City and, at the request and at the expense of any Bondholder, at its address set forth in the registration book required by Section 4.6 hereof, a summarized statement of income and expenditures in connection therewith.

While any Bonds are Outstanding, the Authority shall not exercise any of the remedies on default specified in the Master Lease without the prior written consent of the Trustee.

Section 9.4. Other Remedies; Rights of Bondholders. Except as otherwise limited by the provisions of the Indenture, upon the occurrence of an Event of Default under the Indenture, the Trustee may, upon being satisfactorily indemnified, pursue any available remedy that it deems to be in the best interest of the Bondholders by suit at law or in equity to enforce the payment of the principal of and premium, if any, and interest on the Bonds then Outstanding.

Subject to Section 9.5, if an Event of Default shall have occurred under the Indenture, and if requested so to do by the Bondholders of 25% in aggregate principal amount of Bonds then Outstanding and indemnified as provided in Section 10.1 hereof, the Trustee shall be obligated to exercise such one or more of the rights and powers conferred by this Section 9.4 and by Section 9.2 hereof, as the Trustee, being advised by counsel, shall deem most expedient in the interests of the Bondholders.

No remedy by the terms of the Indenture conferred upon or reserved to the Trustee (or the Bondholders) is intended to be exclusive of any other remedy, but each and every such remedy shall be cumulative and shall be in addition to any other remedy given to the Trustee or to the Bondholders hereunder or now or hereafter existing at law or in equity.

No delay or omission to exercise any right or power accruing upon any default or Event of Default under the Indenture shall impair any such right or power or shall be construed to be a waiver of any such default or Event of Default or acquiescence therein; and such right and power may be exercised from time to time as often as may be deemed expedient. Every power or remedy given by the Indenture, the Master Lease or the Security Documents or to which the Trustee may be otherwise entitled, may be exercised, concurrently or independently, from time to time and as often as may be deemed expedient by the Trustee, and the Trustee may pursue inconsistent remedies.

No waiver of any default or Event of Default hereunder, whether by the Trustee or by the Bondholders, shall extend to or shall affect any subsequent default or Event of Default or shall impair any rights or remedies consequent thereon.

Notwithstanding anything contained herein or in the Security Documents to the contrary, upon the occurrence and continuance of an Event of Default, before taking any foreclosure action or any action which may subject the Trustee to liability under any Environmental Law, the Trustee may require that a satisfactory indemnity bond, indemnity or environmental impairment insurance be furnished for the payment or reimbursement of all expenses to which it may be put and to protect it against all liability resulting from any claims, judgments, damages, losses, penalties, fines, liabilities (including strict liability) and expenses which may result from such foreclosure or other action. The term "Environmental Laws" shall mean all federal, state and local environmental, land use, zoning, health, chemical use, safety and sanitation laws, statutes,

ordinances and codes relating to the protection of the environment or governing the use, storage, treatment, generation, transportation, processing, handling, production or disposal of Hazardous Substances and the rules, regulations, policies, guidelines, interpretations, decisions, orders and directives of federal, state and local governmental agencies and authorities with respect thereto. The term "Hazardous Substances" shall mean any chemical, substance or material classified or designated as hazardous, toxic or radioactive, or other similar term, and now or hereafter regulated under any Environmental Law, including without limitation, asbestos, petroleum and hydrocarbon products. The Trustee shall not be required to take any foreclosure action if the approval of a government regulator shall be a condition precedent to taking such action.

Section 9.5. Right of Bondholders to Direct Proceedings. The Bondholders of a majority in aggregate principal amount of the Bonds then Outstanding shall have the right, at any time, by an instrument or instruments in writing executed and delivered to the Trustee, to direct the method and place of conducting all proceedings to be taken in connection with the enforcement of the terms and conditions of the Indenture, or for the appointment of a receiver or any other proceedings hereunder; provided that such direction shall not be otherwise than in accordance with the provisions of law and of the Indenture and such bondholders have provided the Trustee indemnification as it is provided in Article X. The Trustee shall have the right to decline to follow any direction of Bondowners that in the sole discretion of the Trustee would be unjustly prejudicial to the Trustee or to Bondowners not parties to such direction, that would expose the Trustee to unreasonable liability or financial exposure or that is not in accordance with law or the provisions of this Indenture, shall be entitled to rely without further investigation or inquiry upon any direction given by the Owners of a majority in aggregate principal amount of the Bonds Outstanding, and shall not be responsible for the propriety of or liable for the consequences of following any such direction. Notwithstanding anything to the contrary contained herein, the Trustee shall not be required to foreclose the lien of the Security Documents or bid on behalf of Bondowners at any foreclosure sale (a) if, in the Trustee's sole discretion, such action would subject the Trustee to personal liability for the cost of investigation, removal and/or other remedial activity with respect to Hazardous Substances (as defined in the Security Documents) or (b) if the presence of Hazardous Substances on the property subject to the lien of the Security Documents results in such property having no or nominal value. It is acknowledged and agreed that the Trustee has no authority to manage, own or operate the Project, or any portion thereof, except as necessary to exercise remedies upon default.

Section 9.6. Appointment of Receivers. Upon the occurrence of an Event of Default under the Indenture and upon the filing of a suit or other commencement of judicial proceedings to enforce the rights of the Trustee and of the Bondholders under the Indenture, the Trustee shall be entitled to the appointment of a receiver or receivers of the Trust Estate and of the rents, revenues, earnings, income, products and profits thereof, pending such proceedings, with such powers as the court making such appointment shall confer.

Section 9.7. Waiver. Upon the occurrence of an Event of Default under the Indenture, to the extent that such rights may then lawfully be waived, neither the

Authority, nor anyone claiming through or under it, shall set up, claim or seek to take advantage of any appraisement, valuation, stay, extension or redemption laws now or hereafter in force, in order to prevent or hinder the enforcement of the Indenture, and the Authority, for itself and all who may claim through or under it, hereby waives, to the extent that it lawfully may do so, the benefit of all such laws.

Section 9.8. Application of Moneys. All moneys received by the Trustee pursuant to any right given or action taken under the provisions of this Article shall, after payment of the costs and expenses of the proceedings resulting in the collection of such moneys and of the expenses, liabilities and advances incurred or made by the Trustee, including any Trustee fees and the fees and expenses of its counsel, be deposited in the Bond Fund and all moneys in the Bond Fund (except as otherwise provided herein or in a Supplemental Indenture) shall be applied as follows:

(a) Unless the principal of all the Bonds shall have become or shall have been declared due and payable, all such moneys shall be applied:

FIRST—To the payment to the persons entitled thereto of all installments of interest then due on the Bonds, in the order of the maturity of the installments of such interest and, if the amount available shall not be sufficient to pay in full any particular installment, then to the payment ratably, according to the amounts due on such installment, to the persons entitled thereto, without any discrimination or privilege; and

SECOND—To the payment to the persons entitled thereto of the unpaid principal of and premium, if any, on any of the Bonds which shall have become due (other than Bonds matured or called for redemption for the payment of which moneys are held pursuant to the provisions of the Indenture), in the order of their due dates, with interest on such Bonds from the respective dates upon which they became due (with interest on overdue installments of interest, at the same rate as the rate of the respective Bond or Bonds which are past due) and, if the amount available shall not be sufficient to pay in full Bonds due on any particular date, together with such interest, then to the payment ratably, according to the amount of principal due on such date, to the persons entitled thereto without any discrimination or privilege; and

THIRD—To be held for the payment of the persons entitled thereto as the same shall become due of the principal of and premium, if any, and interest on the Bonds which may thereafter become due either at maturity or upon call for redemption prior to maturity and, if the amount available shall not be sufficient to pay in full Bonds due on any particular date, together with interest then due and owing thereon, payment shall be made ratably according to the amount of principal due on such date to the persons entitled thereto without any discrimination or privilege.

(b) If the principal of all the Bonds shall have become due or shall have been declared due and payable, all such moneys shall be applied to the

payment of the principal and interest then due and unpaid upon the Bonds, without preference or priority of principal over interest or of interest over principal, or of any installment of interest over any other installment of interest, or of any Bond over any other Bond, ratably, according to the amounts due respectively for principal and interest, to the persons entitled thereto without any discrimination or privilege, plus, to the extent permitted by law, interest on overdue installments of interest or principal at the same rate as the rate of the respective Bond or Bonds which are past due.

(c) If the principal of all the Bonds shall have been declared due and payable, and if such declarations shall thereafter have been rescinded and annulled under the provisions of this Article IX then, subject to the provisions of Section 9.8(b) hereof in the event that the principal of all the Bonds shall later become due or be declared due and payable, the moneys shall be applied in accordance with the provisions of Section 9.8(a) hereof.

(d) Following the payment of amounts due with respect to the Bonds, remaining amounts shall be applied to the payment of all obligations then due and payable to any Reserve Instrument Provider under any applicable Reserve Instrument.

Whenever moneys are to be applied pursuant to the provisions of this Section 9.8, such moneys shall be applied at such times, and from time to time, as the Trustee shall determine, having due regard to the amount of such moneys available for application and the likelihood of additional moneys becoming available for such application in the future. Setting aside such moneys in trust for the proper purpose shall constitute proper application by the Trustee, and the Trustee shall have no liability whatsoever to the Authority, to any Bondholder, or to any other person for any delay in applying any such moneys, so long as the Trustee acts with reasonable diligence, having due regard for the circumstances, and ultimately applies the same in accordance with the circumstances known at the time of the application by the Trustee. Whenever the Trustee shall apply such moneys, it shall fix the date (which shall be an Interest Payment Date unless it shall deem another date more suitable) upon which such application is to be made and upon such date interest on the amounts of principal to be paid on such date shall cease to accrue. The Trustee shall give such notice as it may deem appropriate of the deposit with it of any such moneys and of the fixing of any such date, and shall not be required to make payment to the Bondholder of any Bond until such Bond shall be presented to Trustee for appropriate endorsement or for cancellation if fully paid.

Whenever the principal of and premium, if any, and interest on all Bonds and all Reserve Instrument Repayment Obligations have been paid under the provisions of this Section 9.8 and all fees, expenses and charges of the Trustee and its counsel have been paid, any balance remaining in the Bond Fund shall be paid to the City as provided in Section 5.15 of this General Indenture as overpayment of Base Rentals.

Section 9.9. Remedies Vested in the Trustee. All rights of action (including the right to file proof of claims) under the Indenture or under any of the Bonds may be

enforced by the Trustee without the possession of any of the Bonds or the production thereof in any trial or other proceeding relating thereto and any such suit or proceeding instituted by the Trustee shall be brought in its name as the Trustee without the necessity of joining as plaintiffs or defendants any Bondholders, and any recovery of judgment shall be for the equal and ratable benefit of the Bondholders of the Outstanding Bonds.

Section 9.10. Rights and Remedies of Bondholders. No Bondholder shall have any right to institute any suit, action or proceeding at law or in equity for the enforcement of the Indenture or for the execution of any trust hereof or for the appointment of a receiver or any other remedy hereunder, unless a default has occurred of which the Trustee has been notified as provided in Section 10.1(h) hereof, or of which by said subsection it is deemed to have notice, nor unless also such default shall have become an Event of Default under the Indenture and the Bondholders of 25% in aggregate principal amount of Bonds then Outstanding shall have made written request to the Trustee and shall have offered it reasonable opportunity either to proceed to exercise the powers hereinbefore granted or to institute such action, suit or proceeding in their own name or names, nor unless also they have offered to the Trustee indemnity as provided in Section 10.1(l) hereof, nor unless the Trustee shall thereafter fail or refuse to exercise the powers hereinbefore granted, or to institute such action, suit or proceeding in its own name; and such notification, request and offer of indemnity are hereby declared in every case at the option of the Trustee to be conditions precedent to the execution of the powers and trusts of the Indenture, and to any action or cause of action for the enforcement of the Indenture, or for the appointment of a receiver or for any other remedy hereunder; it being understood and intended that no one or more Bondholders shall have any right in any manner whatsoever to affect, disturb or prejudice the lien of the Indenture by its, his, her or their action or to enforce any right hereunder except in the manner herein provided, and that all proceedings at law or in equity shall be instituted, had and maintained in the manner herein provided and for the equal and ratable benefit of the Bondholders of all Bonds then Outstanding. However, nothing contained in the Indenture shall affect or impair the right of any Bondholder to enforce the payment of the principal of and premium, if any, and interest on any Bond at and after the maturity thereof or the redemption date established therefor, or the obligation of the Authority to pay the Bonds issued hereunder to the respective Bondholders thereof at the time, place, from the source and in the manner in the Bonds expressed.

Section 9.11. Termination of Proceedings. In case the Trustee shall have proceeded to enforce any right under the Indenture by the appointment of a receiver or otherwise, and such proceedings shall have been discontinued or abandoned for any reason, or shall have been determined adversely, then and in every such case the Authority, the Trustee and the Bondholders shall be restored to their former positions and rights hereunder respectively, and all rights, remedies and powers of the Trustee shall continue as if no such proceedings had been taken.

Section 9.12. Waivers of Events of Default. The Trustee may, and upon the written direction of the Bondholders of a majority in principal amount of the Bonds then Outstanding shall, waive any Event of Default under the Indenture and its consequences and rescind any declaration of maturity of the principal of the Bonds; provided, however,

that there shall not be waived (1) any Event of Default under the Indenture in the payment of the principal of any Outstanding Bonds at the date of maturity specified therein, or (2) any Event of Default in the payment when due of the interest on any such Bonds, unless prior to such waiver or rescission, all arrears of interests (including interest on overdue installments of interest) or all arrears of payments of principal when due, as the case may be, both with interest at the same rate as the rate of the respective Bond or Bonds which are past due, and all fees and expenses of the Trustee and its counsel, in connection with such Event of Default shall have been paid or provided for, and in cases of any such waiver or rescission, or in case any proceeding taken by Trustee on account of any such Event of Default shall have been discontinued or abandoned or determined adversely, then and in every such case the Authority, the Trustee and the Bondholders shall be restored to their former positions and rights hereunder respectively, but no such waiver or rescission shall extend to any subsequent or other Event of Default, or impair any right consequent thereon.

Section 9.13. Notice of Events of Default under Section 9.1(c); Opportunity of the Authority and the City to Cure Such Events of Default. Anything herein to the contrary notwithstanding, no default under Section 9.1(c) hereof shall constitute an Event of Default under the Indenture until actual notice of such default by registered or certified mail shall be given to the Authority and the City by the Trustee or by the Bondholders of not less than 25% in aggregate principal amount of all Bonds Outstanding, and the Authority and the City shall have had thirty days after receipt of such notice to correct said default or cause said default to be corrected, and shall not have corrected said default or caused said default to be corrected within the applicable period; provided, however, that, if said default be such that it cannot be corrected within the applicable period, it shall not constitute an Event of Default under the Indenture if corrective action is instituted by the Authority and the City within the applicable period and diligently pursued, to the satisfaction of the Trustee until the default is corrected.

With regard to any default concerning which notice is given to the Authority and the City under the provisions of this Section 9.13, the Authority hereby grants the City full authority for account of the Authority to perform any covenant or obligation alleged in said notice to constitute a default, in the name and stead of the Authority with full power to do any and all things and acts to the same extent that the Authority could do and perform any such things and acts and with power of substitution.

Section 9.14. Cooperation of Authority. The Authority covenants and agrees that should there be an Event of Default under the Master Lease with the result that the right of possession of the Projects is returned to the Authority, the Authority shall fully cooperate with the Trustee and with the Bondholders to fully protect the rights and security of the Bondholders and shall diligently proceed in good faith and, if requested by the Trustee or any Bondholder, shall use its best efforts to secure a purchaser or another lessee of the Projects so that at all times sufficient rents and other amounts will be derived from the Projects promptly to meet and pay the principal of and premium, if any, and interest on the Bonds as the same become due and payable, as well as to cover the cost of all Additional Rentals with respect to the Projects required under the Master Lease. Nothing herein shall be construed as requiring the Authority to operate the

Projects or to use any funds or revenues from any source other than the rents and other amounts derived from the Projects.

Section 9.15. Limitation on Remedies and Acceleration During Acquisition and Construction of Portions of Projects. Notwithstanding the provisions of this Article IX or other provisions of the Indenture, the Master Lease or of the Security Documents to the contrary, in the event that (a)(i) a portion of the Projects (the "Completed Portion of the Projects") financed with a separate Series of Bonds is accepted by the City for use and occupancy under the Master Lease, and (ii) the acquisition and construction of additional portions of the Projects (the "Uncompleted Portion of the Projects") financed with one or more Series of Bonds (other than the Series of Bonds described in (i) above) have yet to be completed, and (b) an Event of Default occurs due to the failure to complete the Uncompleted Portion of the Projects, the following limitations shall apply:

(a) Such Event of Default shall be limited to the Series of Bonds issued to finance the Uncompleted Portion of the Projects and not the Series of Bonds issued to finance the Completed Portion of the Projects;

(b) The City shall, subject to the occurrence of an Event of Nonappropriation, continue to pay Base Rentals and Additional Rentals with respect to the Completed Portion of the Projects, and the Master Lease shall remain in full force and effect with respect to the Completed Portion of the Projects;

(c) The Trustee shall use the amounts on deposit in the related account of the Debt Service Reserve Fund to pay amounts due on the Series of Bonds issued to finance the Uncompleted Portion of the Projects and amounts on deposit in the account of the Debt Service Reserve Fund relating to the Series of Bonds issued to finance the Completed Portion of the Projects shall not be used to pay amounts due on the Series of Bonds issued to finance the Uncompleted Portion of the Projects;

(d) The Series of Bonds issued to finance the Completed Portion of the Projects shall not be accelerated or otherwise affected by the Event of Default described in this Section 9.15; and

(e) The Trustee shall not proceed to exercise any remedies under the Indenture or the Security Documents relating to the Completed Portion of the Projects with respect to the Event of Default described in this Section 9.15.

ARTICLE X

THE TRUSTEE

Section 10.1. Acceptance of Trusts. The Trustee hereby accepts the trusts imposed upon it by the Indenture, and agrees to perform said trusts, but only upon and subject to the following express terms and conditions:

(a) The Trustee, prior to the occurrence of an Event of Default under the Indenture and after the curing of all Events of Default under the Indenture which may have occurred, undertakes to perform such duties and only such duties as are specifically set forth in the Indenture. In case an Event of Default has occurred under the Indenture (which has not been cured or waived) the Trustee shall exercise such of the rights and powers vested in it by the Indenture, and use the same degree of care and skill in their exercise, as a corporate trustee would exercise or use under the circumstances in the conduct of its own affairs.

No provision of the Indenture shall be construed to relieve the Trustee from liability for its own negligent action, its own negligent failure to act or its own willful misconduct, except that (i) prior to the occurrence of an Event of Default and after the curing of all Events of Default which may have occurred:

(A) The duties and obligations of the Trustee shall be determined solely by the express provisions of the Indenture, and the Trustee shall be liable only for the performance of such duties and obligations as are specifically set forth in the Indenture, and no implied covenant or obligation shall be read into the Indenture against the Trustee; and

(B) In the absence of bad faith on the part of the Trustee, the Trustee may conclusively rely, as to the truth of the statements and the correctness of the opinions expressed therein, upon any certificates or opinions furnished to the Trustee conforming to the requirements of the Indenture; but in the case of any such certificate or opinion which by any provision hereof is specifically required to be furnished to the Trustee, the Trustee shall be under a duty to examine the same to determine whether or not they conform to the requirements of the Indenture;

and (ii) the Trustee shall not be liable for any other judgment made in good faith by a responsible officer, unless it shall be proved that the Trustee was negligent in ascertaining the pertinent facts.

(b) The Trustee may execute any of the trusts or powers hereof and perform any of its duties by or through attorneys, agents, receivers or employees but shall not be answerable for the conduct of the same appointed in accordance with the standard specified above, and shall be entitled to advice of counsel

(including its own in-house counsel) concerning its duties hereunder, and may in all cases pay such reasonable compensation to all such attorneys, agents, receivers and employees as may reasonably be employed in connection with the trusts hereof. The Trustee may act upon the opinion or advice of any attorney (who may be the attorney or attorneys for the Authority or the City), approved by the Trustee in the exercise of reasonable care. The Trustee shall not be responsible for any loss or damage resulting from any action or inaction in good faith in reliance upon such opinion or advice.

(c) The Trustee shall not be responsible for any recital herein or in any official statement or in the Bonds (except with respect to the certificate of the Trustee endorsed on the Bonds), or for insuring the Projects or collecting any insurance moneys, or for the validity of the execution by the Authority of the Indenture, or of any supplements thereto or instruments of further assurance, or for the sufficiency of the security for the Bonds issued hereunder or intended to be secured hereby, or for the value of title of the Projects or any lien waivers with respect to the Projects; provided, however, that the Trustee shall not be bound to ascertain or inquire as to the performance or observance of any covenants, conditions or agreements on the part of the Authority or on the part of the City under the Master Lease in connection with the matters referred to in Article XIV of the Master Lease, except as hereinafter set forth; but the Trustee may require of the Authority or the City full information and advice as to the performance of the covenants, conditions and agreements aforesaid and as to the condition of the property herein conveyed and the Trustee shall not be responsible for any loss suffered in connection with any investment of funds made by it in accordance with Article VI hereof.

(d) The Trustee shall not be accountable for the use of any Bonds authenticated or delivered hereunder.

(e) The Trustee shall be protected in acting upon any notice, request, consent, certificate, order, affidavit, letter, telegram or other paper or document believed to be genuine and correct and to have been signed or sent by the proper person or persons. Any action taken by the Trustee pursuant to the Indenture upon the request or authority or consent of any person who at the time of making such request or giving such authority or consent is the Bondholder of any Bonds, shall be conclusive and binding upon all future owners of the same Bond and upon Bonds issued in exchange therefor or in place thereof.

(f) As to the existence or nonexistence of any fact or as to the sufficiency or validity of any instrument, paper or proceeding, the Trustee shall be entitled to rely upon a certificate signed by the Authority Representative or the City Representative as sufficient evidence of the facts therein contained and prior to the occurrence of a default of which the Trustee has been notified as provided in Section 10.1(h) hereof, or of which by said Section 10.1(h) it is deemed to have notice, shall also be at liberty to accept a similar certificate to the effect that any particular dealing, transaction or action is necessary or expedient, but may at its

discretion secure such further evidence deemed by it to be necessary or advisable, but shall in no case be bound to secure the same. The Trustee may accept a certificate of any of the officers of the Authority who have executed the Bonds (or their successors), and of any member of the governing body of the City, to the effect that a resolution in the form therein set forth has been adopted by the Authority or the City, as the case may be, as conclusive evidence that such resolution has been duly adopted, and is in full force and effect.

(g) The permissive right of the Trustee to do things enumerated in the Indenture shall not be construed as a duty and it shall not be answerable for other than its gross negligence or willful misconduct.

(h) The Trustee shall not be required to take notice or be deemed to have notice of any Event of Default under the Indenture except an Event of Default under Section 9.1(a) or 9.1(b) hereof or the failure by the Authority to cause to be made any of the payments to the Trustee required to be made by Article IV hereof or failure by the Authority or the City to file with the Trustee any document required by the Indenture or the Master Lease to be so filed subsequent to the issuance of the Bonds, unless the Trustee shall be specifically notified in writing of such default by the Authority or by the Holders of at least 25% in aggregate principal amount of any Series of Bonds then Outstanding, and all notices or other instruments required by the Indenture to be delivered to the Trustee, must, in order to be effective, be delivered at the designated office of the Trustee, and in the absence of such notice so delivered, the Trustee may conclusively assume there is no Event of Default except as aforesaid.

(i) At any and all reasonable times the Trustee, and its duly authorized agents, attorneys, experts, engineers, accountants and representatives, shall have the right fully to inspect any and all of the property herein conveyed, including all books and records of the Authority pertaining to the Projects and the Bonds, and to take such memoranda from and with regard thereto as may be desired.

(j) The Trustee shall not be required to give any bond or surety in respect of the execution of the said trusts and powers or otherwise in respect of the premises.

(k) Notwithstanding anything elsewhere in the Indenture with respect to the authentication of any Bonds, the withdrawal of any cash or the taking of any action whatsoever, within the purview of the Indenture, the Trustee shall have the right, but shall not be required, to demand any showings, certifications, opinions, appraisals or other information, or corporate action or evidence thereof, in addition to that by the terms hereof required as a condition of such action, by the Trustee deemed desirable for the purpose of establishing the right of the Authority to the authentication of any Bonds, the withdrawal of any cash or the taking of any other action by the Trustee.

(l) The Trustee shall be under no obligation to exercise any of the rights or powers vested in it by the Indenture at the request, order or direction of any of the Bondholders, pursuant to the provisions of the Indenture, unless such Bondholders shall have offered to the Trustee security or indemnity acceptable to it against the fees, costs, expenses and liabilities, including fees and expenses of its counsel, which may be incurred therein or thereby.

(m) All moneys received by the Trustee shall, until used or applied or invested as herein provided, be held in trust for the purposes for which they were received but need not be segregated from other funds except to the extent required by law. Neither the Trustee nor any Paying Agent shall be under any liability for interest on any moneys received hereunder except such as may be agreed upon.

Section 10.2. Fees, Charges and Expenses of the Trustee. The Trustee shall be entitled to payment and reimbursement for reasonable fees for its services rendered hereunder and all advances, counsel fees and other expenses reasonably and necessarily made or incurred by the Trustee in connection with such services and such other compensation as may be authorized under the Master Lease. Upon an Event of Default under the Indenture, but only upon such an Event of Default, the Trustee shall have a first lien with right of payment, prior to payment on account of principal of and premium, if any, and interest on any Bond, upon the Trust Estate for the foregoing fees, charges and expenses incurred by it.

Section 10.3. Notice to Bondholders. The Trustee shall give to the Bondholders notice of each default hereunder known to the Trustee (or of which the Trustee is deemed to have notice by Section 10.1(h) hereof) within ninety days after the occurrence thereof, unless such default shall have been remedied or cured before the giving of such notice; provided that, except in the case of default in the payment of principal of or premium, if any, or interest on any of the Bonds, the Trustee shall be protected in withholding such notice if and so long as the board of directors, the executive committee or a trust committee of directors or responsible officers of the Trustee in good faith determines that the withholding of such notice is in the interest of the Bondholders. Each such notice of default shall be given by the Trustee by mailing written notice thereof to all Bondholders of Bonds then outstanding whose names appear on the list of Bondholders as provided in Section 4.6 hereof.

Section 10.4. Intervention by the Trustee. In any judicial proceeding to which the Authority is a party and which, in the opinion of the Trustee and its counsel, has a substantial bearing on the interest of owners of the Bonds, the Trustee may intervene on behalf of Bondholders and shall do so if requested in writing by the Bondholders of at least 25% of the aggregate principal amount of Bonds then Outstanding.

Section 10.5. Successor Trustee. Any corporation or association into which the Trustee may be converted or merged, or with which it may be consolidated, or to which it may sell or transfer its trust business and assets as a whole or substantially as a whole, or any corporation or association resulting from any such conversion, sale, merger, consolidation or transfer to which it is a party, shall be and become successor to the

Trustee hereunder and vested with all of the title to the Trust Estate and all the trusts, powers, discretions, immunities, privileges and all other matters as was its predecessor, without the execution or filing of any instrument or any further act, deed or conveyance on the part of any of the parties hereto, anything herein to the contrary notwithstanding.

Section 10.6. Resignation by the Trustee. The Trustee and any successor to the Trustee may at any time resign from the trusts herein created by giving sixty days' written notice by registered or certified mail to the Authority and to the Bondholders of each Bond as shown by the list of Bondholders required by Section 4.6 hereof to be kept by the Trustee, and such resignation shall take effect only upon the appointment of a successor Trustee by the Bondholders or by the Authority; provided, however that if no successor Trustee has been appointed within 60 days of the date of such notice of resignation, the resigning Trustee may petition any court of competent jurisdiction for the appointment of a successor Trustee, and such court may thereupon, after such notice, if any, as it deems proper and prescribes, appoint a successor Trustee.

Section 10.7. Removal of the Trustee. The Trustee may be removed by the Authority at any time, by an instrument or concurrent instruments in writing delivered to the Trustee, provided that such instrument or instrument concurrently appoint a successor Trustee meeting the qualifications set forth herein.

Section 10.8. Appointment of Successor Trustee. In case the Trustee hereunder shall resign or be removed, or be dissolved, or shall be in course of dissolution or liquidation, or otherwise become incapable of acting hereunder, or in case it shall be taken under the control of any public officer or officers, or of a receiver appointed by a court, a successor may be appointed by the Authority by an instrument or concurrent instruments executed by its Chair/President and attested by its Secretary-Treasurer under its seal (or, if an Event of Default exists, by the Registered Owners of a majority in aggregate principal amount of Bonds then Outstanding, by an instrument or concurrent instruments in writing signed by such Owners, or by their attorneys in fact, duly authorized; provided, nevertheless, that in case of such vacancy the Authority by an instrument executed by the Chair/President and attested by the Secretary-Treasurer under its seal, may appoint a temporary Trustee to fill such vacancy until a successor Trustee shall be appointed by the Registered Owners in the manner above provided; and any such temporary Trustee so appointed by the Authority shall immediately and without further act be superseded by the Trustee so appointed by such Registered Owners). The original Trustee and every such Trustee appointed pursuant to the provisions of this Section 10.8 shall be a trust company or bank in good standing located in or incorporated under the laws of the State duly authorized to exercise trust powers and subject to examination by federal or state authority, having a reported capital and surplus of not less than Seventy-Five Million Dollars ($75,000,000).

Section 10.9. Concerning Any Successor Trustee. Every successor Trustee appointed hereunder shall execute, acknowledge and deliver to its predecessor and also to the Authority and the City an instrument in writing accepting such appointment hereunder, and thereupon such successor, without any further act, deed or conveyance, shall become fully vested with all the estates, properties, rights, powers, trusts, duties and

obligations of its predecessors; but such predecessor shall, nevertheless, on the written request of the Authority, or of its successor, execute and deliver an instrument transferring to such successor all the estates, properties, rights, powers and trusts of such predecessor hereunder; and every predecessor Trustee shall deliver all securities and moneys held by it as Trustee hereunder to its successor. Should any instrument in writing from the Authority be required by any successor Trustee for more fully and certainly vesting in such successor the estate, rights, powers and duties hereby vested or intended to be vested in the predecessor, any and all such instruments in writing shall, on request, be executed, acknowledged and delivered by the Authority. The resignation of any Trustee and the instrument or instruments removing any Trustee and appointing a successor hereunder, together with all other instruments provided for in this Article X, shall be filed or recorded by the successor Trustee in each recording office where the Indenture shall have been filed or recorded. Additionally, all substitutions of Trustee under the Security Documents shall be filed or recorded in accordance with the laws of the State.

In the event of a change in the office of Trustee, the predecessor Trustee which has resigned or been removed shall cease to be Trustee hereunder and Bond Registrar for the Bonds and Paying Agent for principal of, premium, if any, and interest on the Bonds, and the successor Trustee shall become such Trustee, Bond Registrar and Paying Agent for the Bonds.

Section 10.10. Right of the Trustee to Pay Taxes and Other Charges. In case any tax, assessment, governmental or other charge upon, or insurance premium with respect to, any part of a Project or Projects is not paid as required herein or in the Master Lease or the Security Documents, the Trustee may pay such tax, assessment, governmental or other charge, or insurance premium, without prejudice, however, to any rights of the Trustee or the Bondholders arising in consequence of such failure; and any amount at any time so paid under this Section 10.10, with interest thereon from the date of payment at a rate per annum equal to the then prevailing base rate of the Trustee as of the date of payment shall become so much additional indebtedness secured by the Indenture, and the same shall be given a preference in payment over any of the Bonds, and shall be paid out of the proceeds of Base Rentals or Additional Rentals collected from the Projects, if not otherwise caused to be paid; but the Trustee shall not be under any obligation to make any such payment unless it shall have been requested to do so by the Bondholders of at least 25% of the aggregate principal amount of Bonds then Outstanding and shall have been provided with adequate funds for the purpose of such payment.

Section 10.11. Appointment of Co-Trustee. It is the purpose of the Indenture that there shall be no violation of any law of any jurisdiction (including particularly the laws of the State) denying or restricting the right of banking corporations or associations to transact business as the Trustee in such jurisdiction. It is recognized that in case of litigation under the Indenture, the Master Lease, or the Security Documents, and in particular in case of the enforcement of either upon an Event of Default, or in case the Trustee deems that by reason of any present or future law of any jurisdiction it may not exercise any of the powers, rights or remedies herein granted to the Trustee or hold title to the properties, in trust, as herein granted, or take any other action which may be

desirable or necessary in connection therewith, it may be necessary that the Trustee appoint an additional individual or institution as a separate or Co-Trustee. The following provisions of this Section 10.11 are adapted to these ends.

The Trustee may appoint an additional individual or institution as a separate or Co-Trustee, in which event each and every remedy, power, right, claim, demand, cause of action, immunity, estate, title, interest and lien expressed or intended by the Indenture to be exercised by or vested in or conveyed to the Trustee with respect thereto shall be exercisable by and vested in such separate or Co-Trustee, but only to the extent necessary to enable such separate or Co-Trustee to exercise such powers, rights and remedies, and every covenant and obligation necessary to the exercise thereof by such separate or Co-Trustee shall run to and be enforceable by either of them.

Should any deed, conveyance or instrument in writing from the Authority be required by the separate or Co-Trustee so appointed by the Trustee for more fully and certainly vesting in and confirming to it such properties, rights, powers, trusts, duties and obligations, any and all such deeds, conveyances and instruments in writing shall, on request, be executed, acknowledged and delivered by the Authority. In case any separate or Co-Trustee, or a successor to either, shall die, become incapable of acting, resign or be removed, all the estates, properties, rights, powers, trusts, duties and obligations of such separate or Co-Trustee, so far as permitted by law, shall vest in and be exercised by the Trustee until the appointment of a new Trustee or successor to such separate or Co-Trustee.

Section 10.12. Trustee Not Responsible for Actions of Authority. The Trustee shall not be liable or responsible because of the failure of the Authority or of any of its officers, employees or agents to make any collections or deposits, or to perform any act herein required of the Authority or its officers, directors, employees or agents. The Trustee shall not be responsible for the application of any of the proceeds of the Bonds or any other moneys deposited with it and paid out, invested, withdrawn or transferred in accordance with the provisions of the Indenture. The immunities and exemptions from liability of the Trustee hereunder shall extend to its directors, officers, employees and agents.

Section 10.13. Trustee's Right to Own and Deal in Bonds. The bank or trust company acting as Trustee under the Indenture, and its directors, officers, employees or agents, may in good faith buy, sell, own, hold and deal in any of the Bonds issued hereunder and secured by the Indenture, and may join in any action which any Bondholder may be entitled to take with like effect as if such bank or trust company were not the Trustee under the Indenture.

Section 10.14. Requirements as to Trustee's Records. So long as any of the Bonds shall remain outstanding:

(a) the records of the Trustee pertaining to the Bonds and to the Trustee hereunder shall be available to and open for inspection at all reasonable

times by the Authority, the City and all other governmental bodies legally entitled to inspect such records, and

(b) the Trustee shall retain in its possession all financial statements furnished to it pursuant to the Indenture. The Trustee shall transfer to any successor trustee copies of the records of the Trustee pertaining to the Bonds and to the Trustee.

Section 10.15. Trustee's Own Funds. No provision of the Indenture or of the Bond Documents shall require the Trustee to expend or risk its own funds or otherwise incur any financial liability in the performance of any of its duties hereunder, or in the exercise of any of its rights or powers, if it has reasonable grounds for believing that the repayment of such funds or adequate indemnity against such risk or liability is not reasonably assured to it.

Section 10.16. Direct Payment Authorization. (a) The Authority hereby authorizes and directs the Trustee to take all necessary actions to effectively carry out the duties required to apply for and accept Direct Payments from the Internal Revenue Service on behalf of the Authority under Sections 54AA, 1400U-2, and 6431 of the Code or such other tax provisions of substantially similar nature which may be hereafter authorized. In connection with such application and acceptance of Direct Payments, the Authority shall provide to the Trustee (i) a copy of the executed Form 8038-TC filed in connection with the issuance of the Bonds, (ii) an incumbency certificate listing the officers of the Authority authorized to act on behalf of the Authority under this Indenture and (iii) such other instruments, opinions and certificates as the Trustee may reasonably request. Upon receipt of any Direct Payments, the Trustee shall promptly deposit such payment in the Bond Fund for use in paying debt service on the Bonds. Failure by the Trustee to prepare or file the Form 8038-CP shall not affect any payment obligations of the Authority hereunder. The Authority hereby authorizes and directs the Trustee to prepare and file the IRS Form 8038-CP as may be required from time to time under the Code as are within its power and are requested by and at the expense of the Authority and agreed to by the Trustee, to request the Direct Payments. The Form 8038-CP shall authorize the Direct Payments requested in accordance with this clause (a) to be paid to the Trustee.

(b) For fixed rate bonds, at least ninety (90) days prior to each Interest Payment Date with respect to the Bonds, the Trustee shall deliver to the Authority by a delivery method that provides the Trustee with evidence of delivery a completed Form 8038-CP, which is to be signed by an Authority Representative. The form and the certification shall be sent to the attention of an Authority Representative for the Authority's signature. The Authority shall return such signed Form 8038-CP to the Trustee not later than eighty (80) days prior to each Interest Payment Date with respect to the Bonds, by a delivery method which provides the Authority with evidence of delivery. Not more than ninety (90) and not less than seventy (70) days prior to each Interest Payment Date for the Bonds, the Trustee shall file, or cause to be filed a Form 8038-CP with the Internal Revenue Service Center, Ogden, Utah 84201, or any successor location specified

by the Internal Revenue Service, or take such other or additional actions as may be required from time to time under the Code as are within its power and are requested by the Authority and agreed to by the Trustee, to request the Direct Payments with respect to such Interest Payment Date. Upon completion of filing, the Trustee shall deliver a copy of such Form 8038-CP to the Authority.

(c) For variable rate bonds, no more than five (5) days after the last Interest Payment Date within the calendar quarter period for which reimbursement is being requested, the Trustee shall deliver to the Authority by a delivery method that provides the Trustee with evidence of delivery a completed Form 8038-CP, which is to be signed by an Authority Representative. The form and certification shall be sent to the attention of an Authority Representative. The Authority shall return such signed Form 8038-CP to the Trustee not later than twenty (20) days after the last Interest Payment Date within the calendar quarter period for which reimbursement is being requested with respect to the Bonds, by a delivery method which provides the Authority with evidence of delivery. Not more than 35 days after the last Interest Payment Date within the calendar quarter period for which reimbursement is being requested, the Trustee shall file or cause to be filed a Form 8038-CP with the Internal Revenue Service Center, Ogden, Utah 84201, or any successor location specified by the Internal Revenue Service, or take such other or additional actions as are within its power and are requested by the Authority and agreed to by the Trustee, to request the Direct Payments with respect to such prior Interest Payment Dates. Upon completion and filing, the Trustee shall deliver a copy of such Form 8038-CP to the Authority.

ARTICLE XI

SUPPLEMENTAL INDENTURES

Section 11.1. Supplemental Indentures Not Requiring Consent of Bondholders. The Authority and the Trustee may, without consent of, or notice to, any of the Bondholders enter into an indenture or indentures supplemental to the Indenture which shall not be inconsistent with the general terms and provisions hereof for any one or more of the following purposes:

(a) To cure any ambiguity or formal defect or omission in the Indenture;

(b) To grant to or confer upon the Trustee for the benefit of the Bondholders any additional rights, remedies, powers or authority that may lawfully be granted to or conferred upon the Bondholders or the Trustee;

(c) To subject to the Indenture additional revenues, properties or collateral;

(d) To modify, amend or supplement the Indenture or any indenture supplemental hereto in such matter as to permit the qualification hereof and thereof under the Trust Indenture Act of 1939, as amended, or any similar federal statute hereafter in effect or to permit the qualification of the Bonds for sale under the securities laws of any of the states of the United States of America;

(e) To evidence the appointment of a separate Trustee or a Co-Trustee or paying agent or the succession of a new Trustee or paying agent hereunder;

(f) To issue the Initial Bonds, Refunding Bonds or Additional Bonds in accordance with the Indenture and the Master Lease; and

(g) To make any other change which, in the judgment of the Trustee is not to the prejudice of the Trustee or, as evidenced by an opinion of counsel delivered to the Trustee, the holders of the Bonds.

Section 11.2. Supplemental Indentures Requiring Consent of Bondholders. Exclusive of Supplemental Indentures covered by Section 11.1 hereof and subject to the terms and provisions contained in this Section 11.2, and not otherwise, the Bondholders of not less than 66 2/3% in aggregate principal amount of the Bonds then Outstanding shall have the right, from time to time, anything contained in the Indenture to the contrary notwithstanding, to consent to and approve the execution by the Authority and the Trustee of such Supplemental Indentures hereto as shall be deemed necessary and desirable by the Authority for the purpose of modifying, altering, amending, adding to or rescinding, in any particular, any of the terms or provisions contained in the Indenture or in any Supplemental Indenture; provided, however, that nothing in this Section 11.2 or in Section 11.1 hereof contained shall permit, or be construed as permitting, (i) an extension of the maturity of the principal of, or the interest on, any Bond issued hereunder, or (ii) a

reduction in the principal amount of, or redemption premium on, any Bond or the rate of interest thereon, or (iii) a privilege or priority of any Bond or Bonds over any other Bond or Bonds, or (iv) a reduction in the aggregate principal amount of the Bonds required for consent to such Supplemental Indentures, or (v) permit the creation of any lien ranking prior to or on a parity with the lien of the Indenture and the Security Documents on the Trust Estate or any part thereof (except in connection with the issuance of Refunding Bonds or Additional Bonds), or (vi) deprive the Bondholder of any Bond then Outstanding of the lien hereby created on any material portion of the Trust Estate, without the prior consent of the Bondholders of 100% of the Bonds affected by such action. The Trustee may, but shall not be obligated to, enter into any such Supplemental Indenture which adversely affects the Trustee's rights, deeds or immunities under the Indenture or the Master Lease.

If at any time the Authority shall request the Trustee to enter into any such Supplemental Indenture for any of the purposes of this Section 11.2, the Trustee shall, upon being satisfactorily indemnified with respect to expenses, cause notice of the proposed execution of such Supplemental Indenture to be given by registered or certified mail to the Bondholder of each Bond shown by the list of Bondholders required by the terms of Section 4.6 hereof to be kept at the office of the Trustee. Such notices shall briefly set forth the nature of the proposed Supplemental Indenture and shall state that copies thereof are on file at the designated office of the Trustee for inspection by all Bondholders. If the Bondholders of not less than 66 2/3% in aggregate principal amount of the Bonds Outstanding at the time of the execution of any such Supplemental Indenture shall have consented to and approved the execution thereof as herein provided, no holder of any Bond shall have any right to object to any of the terms and provisions contained therein, or the operation thereof, or in any manner to question the propriety of the execution thereof, or to enjoin or restrain the Trustee or the Authority from executing the same or from taking any action pursuant to the provisions thereof. Upon the execution of any such Supplemental Indenture as in this Article XI permitted and provided, the Indenture shall be and be deemed to be modified and amended in accordance therewith.

Anything therein to the contrary notwithstanding, so long as no Event of Default or Event of Nonappropriation with respect to the Projects shall have occurred and be continuing under the Master Lease, a Supplemental Indenture under this Article shall not become effective unless and until the City shall have consented to the execution and delivery of such Supplemental Indenture. In this regard and except with respect to Supplemental Indentures for which the City has otherwise been notified, the Trustee shall cause notice of the proposed execution of any such Supplemental Indenture together with a copy of the proposed Supplemental Indenture to be mailed by certified or registered mail to the City at least fifteen days prior to the proposed date of execution and delivery of any such Supplemental Indenture. The City shall be deemed to have consented to the execution and delivery of any such Supplemental Indenture if the Trustee does not receive a letter of protest or objection thereto signed by or on behalf of the City on or before the fifteenth day after the mailing of said notice.

ARTICLE XII

AMENDMENT OF MASTER LEASE

Section 12.1. Amendments, etc., to Master Lease Not Requiring Consent of Bondholders. The Authority and the Trustee shall without the consent of or notice to the Bondholders consent to any amendment, change or modification of the Master Lease as may be required (i) by the provisions of the Indenture and the Master Lease (including those provisions applicable to the issuance of the Initial Bonds, Refunding Bonds and Additional Bonds), (ii) for the purpose of curing any ambiguity or formal defect or omission, (iii) so as to more precisely identify the Projects, or the Project sites or substitute or add additional improvements or equipment to the Projects or additional rights or interests in property acquired in accordance with the provisions of the Master Lease, or (iv) in connection with any amendment to the Indenture pursuant to Section 11.1 hereof, or (v) in connection with any other change therein which, in the judgment of the Trustee is not to the prejudice of the Trustee or, as evidenced by an opinion of counsel delivered to the Trustee, the holders of the Bonds.

Section 12.2. Amendments, etc., to the Master Lease Requiring Consent of Holders of the Bonds. Except for the amendments, changes or modifications as provided in Section 12.1 hereof, neither the Authority nor the Trustee shall consent to any other amendment, change or modification of the Master Lease without mailing of notice and receipt of the written approval or consent of the Holders of not less than 66 2/3% in aggregate principal amount of the Bonds at the time outstanding given as in this Section 12.2 provided. If at any time the Authority and the City shall request the consent of the Trustee to any such proposed amendment, change or modification of the Master Lease, the Trustee shall, upon being satisfactorily indemnified with respect to expenses, cause notice of such proposed amendment, change or modification to be given in the same manner as provided by Section 11.2 of the Indenture with respect to Supplemental Indentures. Such notice shall briefly set forth the nature of such proposed amendment, change or modification and shall state that copies of the instrument embodying the same are on file at the designated office of Trustee for inspection by all Holders of the Bonds. No such amendment, change or modification of the Master Lease shall reduce the aggregate principal amount of the Bonds the Bondholders of which are required to consent to any amendment, change or modification of such Master Lease, or materially reduce or postpone payments required to be made under the Master Lease without the consent of all of the Holders of the Bonds Outstanding. Approval or consent shall be evidenced in a manner acceptable to the Trustee and the Authority.

ARTICLE XIII

MISCELLANEOUS

Section 13.1. Consents, etc. of Bondholders. Any consent, request, direction, approval, objection or other instrument required by the Indenture to be signed and executed by the Bondholders may be in any number of concurrent documents and may be executed by such Bondholders in person or by agent appointed in writing. Proof of the execution of any such consent, request, direction, approval, objection or other instrument or of the writing appointing any such agent and of the ownership of Bonds, if made in the following manner, shall be sufficient for any of the purposes of the Indenture, and shall be conclusive in favor of the Trustee with regard to any action taken by it under such request or other instrument, namely:

(a) The fact and date of the execution by any person of any such writing may be proved by the certificate of any officer in any jurisdiction who by law has power to take acknowledgments within such jurisdiction that the person signing such writing acknowledged before him the execution thereof, or by an affidavit of any witness to such execution.

(b) The fact of ownership of Bonds and the amount or amounts, numbers and other identification of such Bonds, and the date of holding the same, shall be proved by the registration books of the Authority maintained by the Trustee pursuant to Section 4.6 of the Indenture.

Section 13.2. Limitation of Rights. With the exception of any rights herein expressly conferred, nothing expressed or mentioned in or to be implied from the Indenture or the Bonds is intended or shall be construed to give to any person or company other than the parties hereto, and the holders of the Bonds, any legal or equitable right, remedy or claim under or with respect to the Indenture or any covenants, conditions and provisions herein contained; the Indenture and all of the covenants, conditions and provisions hereof being intended to be and being for the sole and exclusive benefit of the parties hereto, the City and the Bondholders as herein provided.

Section 13.3. Severability. If any provision of the Indenture shall be held or deemed to be or shall, in fact, be illegal, inoperative or unenforceable, the same shall not affect any other provision or provisions herein contained or render the same invalid, inoperative or unenforceable to any extent whatsoever.

Section 13.4. Notices. Any notice, request, complaint, demand, communication or other paper shall be sufficiently given and shall be deemed given when delivered or mailed by registered or certified mail, postage prepaid, or sent by facsimile addressed as follows: If to the Authority, to the Municipal Building Authority of West Valley City, Utah, 3600 Constitution Blvd, West Valley City, Utah, 84119, Attention: Chair/President; if to the Trustee, to _____, Attention: Corporate Trust Department, _____, Salt Lake City, Utah 841__; if to the City, 3600 Constitution Blvd, West Valley City, Utah, 84119, Attention: Mayor. A

duplicate copy of each notice required to be given hereunder by the Trustee to either the Authority or the City shall also be given to the others. The Authority, the City, and the Trustee may designate any further or different addresses to which subsequent notices, certificates or other communications shall be sent.

Section 13.5. Payments Due on Days other than Business Days. In any case where the date of maturity of interest on or principal of the Bonds or the date fixed for redemption of any Bonds shall be other than a Business Day, then payment of principal and premium, if any, or interest need not be made on such date but may be made on the next succeeding Business Day with the same force and effect as if made on the date of maturity or the date fixed for redemption, and no interest shall accrue for the period after such date.

Section 13.6. Counterparts. This General Indenture may be simultaneously executed in several counterparts, each of which shall be an original and all of which shall constitute but one and the same instrument.

Section 13.7. Applicable Provisions of Law. The Indenture shall be governed by and construed in accordance with the laws of the State.

IN WITNESS WHEREOF, the Authority has caused these presents to be signed in its corporate name and with its official seal hereunto affixed and attested by its duly authorized officers, and to evidence its acceptance of the trust hereby created, the Trustee has caused these presents to be executed in its corporate name with its corporate seal hereunto affixed all by its duly authorized officers, as of the date first above written.

MUNICIPAL BUILDING AUTHORITY
OF WEST VALLEY CITY, UTAH

(SEAL)

By:_____
Chair/President

ATTEST AND COUNTERSIGN:

By: _____
Secretary-Treasurer

_____,
as Trustee

By:_____

Title:_____

WHEN RECORDED, RETURN TO:

Bradley D. Patterson
Ballard Spahr LLP
201 South Main Street, Suite 800
Salt Lake City, Utah 84111

GROUND LEASE AGREEMENT

Dated as of [June 1], 2016

between

MUNICIPAL BUILDING AUTHORITY
OF WEST VALLEY CITY, UTAH, AS LESSEE

A Nonprofit Corporation Organized Under the Laws
of the State of Utah

and

WEST VALLEY CITY, UTAH, AS LESSOR

A Body Corporate and Politic
of the State of Utah

GROUND LEASE AGREEMENT

THIS GROUND LEASE AGREEMENT (this "Ground Lease") dated as of [June 1], 2016, entered into by and between the MUNICIPAL BUILDING AUTHORITY OF WEST VALLEY CITY, UTAH (the "Authority"), as lessee hereunder, a nonprofit corporation duly organized, existing and in good standing under the laws of the State of Utah, and also acting as grantor under a certain General Indenture of Trust of even date herewith, and WEST VALLEY CITY, UTAH (the "City"), as lessor hereunder, a body corporate and politic duly existing under the laws of the State of Utah;

W I T N E S S E T H :

WHEREAS, the City is the owner in fee simple of the real property described in the attached Exhibit A (the "Property"); and

WHEREAS, at the request of the City, the Authority desires to issue its Lease Revenue and Refunding Bonds, Series 2016, in the aggregate principal amount of $_____ (the "Series 2016 Bonds") for the purpose of (a) financing the acquisition and construction of a new fire station and the remodeling of an existing fire station and, related improvements (the "Fire Station Projects"), (b) refinancing the Maverik Center (the "Maverik Center Project" and together with the Fire Station Projects, the "2016 Project"), by refunding the Authority's outstanding lease revenue bonds relating to the Maverik Center Project (the "Refunded Bonds"), (c) funding any required deposit to a debt service reserve fund, and (d) paying costs associated with the issuance of the Series 2016 Bonds; and

WHEREAS, the Authority desires to lease, as ground lessee, from the City the site on which the 2016 Project is located as described as Exhibit A attached hereto (the "Property"); and

WHEREAS, the City desires to lease the Property, as ground lessor, to the Authority under the terms and provisions set forth in this Ground Lease; and

WHEREAS, under the provisions of a resolution adopted on May 10, 2016, the City has authorized and approved (i) the execution of this Ground Lease, (ii) a Master Lease Agreement dated as of [June 1], 2016 (the "Master Lease") between the City and the Authority, wherein the Authority will lease to the City the 2016 Project and (iii) certain actions to be taken by the Authority in connection with the financing of the 2016 Project, including the issuance by the Authority of the Series 2016 Bonds under a General Indenture of Trust dated as of [June 1], 2016, as supplemented by a First Supplemental Indenture of Trust dated as of [June 1], 2016 (collectively, the "Indenture"), each between the Authority and _____, as trustee (the "Trustee"); and

WHEREAS, pursuant to the provisions of a resolution adopted on May 10, 2016, the Governing Board of the Authority has authorized, approved and directed the execution of this Ground Lease, has authorized and approved the execution of the Master Lease, the Indenture and the other Security Documents (as defined in the Indenture) and

has authorized, approved and directed certain actions to be taken by the Authority in connection with the financing of the 2016 Project, including the issuance of the Series 2016 Bonds:

NOW, THEREFORE, for and in consideration of the premises and the mutual promises and covenants herein contained, the parties hereto agree as follows:

ARTICLE I

DEFINITIONS

Terms defined in the above recitals shall have the same meaning when used herein. Unless the context otherwise requires or unless otherwise specified herein, all terms defined in Article I of the General Indenture, Article I of the First Supplemental Indenture and Article I of the Master Lease shall have the same meaning where used in this Ground Lease. In addition, unless the context otherwise requires, the terms defined in this Article I shall, for purposes of this Ground Lease, have the meaning herein specified.

"Event of Default" means one or more events of default as defined in Section 12.1 of this Ground Lease.

"Ground Lease Term" means the duration of the leasehold estate created in the Property as provided in Article IV of this Ground Lease.

"Property" has the meaning ascribed thereto in the recitals to this Ground Lease.

"Rentals" means the rental payments payable by the Authority hereunder.

"State" means the State of Utah.

ARTICLE II

REPRESENTATIONS, COVENANTS AND WARRANTIES

Section 2.1 Representations, Covenants and Warranties of the City. The City represents, covenants and warrants for the benefit of the Authority and the Trustee as follows:

(a) The City is a duly existing political subdivision and body corporate and politic within the State under the Constitution and laws of the State. Under the provisions of the Constitution and laws of the State, the City is authorized to enter into the transactions contemplated by this Ground Lease and to carry out its obligations hereunder. The City has duly authorized and approved the execution and delivery of this Ground Lease.

(b) The City warrants that it holds the fee simple interest in the Property, and that all the Property is free from any encumbrances other than Permitted Encumbrances.

Section 2.2 Representations, Covenants and Warranties of the Authority. The Authority represents, covenants and warrants for the benefit of the City and the Trustee as follows:

(a) The Authority is a nonprofit corporation duly incorporated and in good standing in the State of Utah and is duly qualified to transact business in the State of Utah, is not in violation of any provision of its Articles of Incorporation or its Bylaws, has the corporate power and authority to enter into this Ground Lease and has duly authorized and approved the execution and delivery of this Ground Lease by proper corporate action.

(b) The Authority will take no action or fail to take any action, which action or failure to act would constitute a default under the Master Lease or this Ground Lease.

ARTICLE III

DEMISING CLAUSE

The City hereby demises and leases the Property to the Authority and the Authority leases the Property from the City, subject only to Permitted Encumbrances, in accordance with the provisions of this Ground Lease, to have and to hold for the Ground Lease Term unless sooner terminated as expressly provided herein.

ARTICLE IV

GROUND LEASE TERM

Section 4.1 Commencement of Ground Lease Term. The Ground Lease Term shall commence as of the date of issuance of the Series 2016 Bonds, and shall terminate on June 30, 20__, unless sooner terminated in accordance with the provisions of Section 4.2 hereof.

Section 4.2 Termination of Ground Lease Term. The Ground Lease Term shall terminate upon the first to occur of any of the following events:

(a) The expiration of the Ground Lease Term as provided in Section 4.1 hereof; or

(b) The conveyance of the 2016 Project to the City under the provisions of Section 12.1 of the Master Lease.

Section 4.3 Option to Renew Ground Lease. Notwithstanding anything contained elsewhere herein to the contrary, in the event the capital actually invested (as defined in the Local Building Authority Act, Title 17D, Chapter 2, Utah Code Annotated, 1953 as amended) by the Authority in improvements constructed upon the Property has not been fully repaid by the City at the expiration of the term of this Ground Lease, or upon an Event of Nonappropriation or Event of Default as described in Sections 6.6 and 14.1 respectively of the Master Lease, the Ground Lease shall automatically be renewed on the same terms and conditions as set forth herein, for an additional term sufficient to repay said capital, which term, when added to the number of years for which this Ground Lease has theretofore been in effect, shall not exceed thirty (30) years.

ARTICLE V

ENJOYMENT OF PROPERTY

Subject to the provisions of the Master Lease, the City hereby covenants to provide the Authority during the Ground Lease Term with quiet use and enjoyment of the Property and the Authority shall during the Ground Lease Term peaceably and quietly have and hold and enjoy the Property, without suit, trouble or hindrance from the City, except as expressly set forth herein. The City shall not interfere with such quiet use and enjoyment during the Ground Lease Term so long as no Event of Default shall have occurred. The City shall, at the request of the Authority, join in any legal action in which the Authority asserts its right to such possession and enjoyment, to the extent that the City may lawfully do so. In addition, the Authority may at its own expense join in any legal action affecting its possession and enjoyment of the Property and shall be joined in any action affecting its liabilities hereunder.

The City shall have the right at all reasonable times during business hours to enter into and upon the Property for the purpose of inspecting the same.

ARTICLE VI

PAYMENTS BY THE AUTHORITY

The Authority shall pay Rental Payments to the City in the sum of _____ Dollars ($_____) (being one dollar ($1) per year for a maximum of __ years), which amount represents the total Rental Payments due hereunder during the Ground Lease Term (including all renewal option periods). The parties hereto hereby acknowledge that said Rental Payments have been paid in full on the date hereof in lawful money of the United States of America at the principal office of the City Council of the City. The City and the Authority hereby determine and agree that the Rental Payments payable hereunder during the Ground Lease Term, together with other good and valuable consideration received by the City under and pursuant to the Master Lease, represent reasonable rental for the use of the Property. In making such determination, the City and the Authority have given consideration to the current value of the Property, the execution by the City and the Authority of the Master Lease and the rentals payable thereunder, the financing by the City of the 2016 Project, the uses and purposes for which the 2016 Project will be employed by the City, the benefit to the citizens of the City by reason of the improvement of the 2016 Project and the use and occupancy of such facilities pursuant to the terms and provisions of the Master Lease.

ARTICLE VII

NONSUBORDINATION OF THE CITY'S INTEREST

The Authority intends to finance the 2016 Project by the issuance of the Series 2016 Bonds in accordance with the provisions of the Master Lease and Indenture; however, it is understood and agreed that only the Authority's leasehold interest in the Property will be used as security for the payment of the principal, premium, if any, and interest on such Series 2016 Bonds. Consequently, it is understood and agreed by and between the City and the Authority that the City has not subordinated, and shall not be required to subordinate, its interest in and to the Property to secure such financing. However, it is hereby acknowledged that improvements constructed on the Property, including but not limited to the 2016 Project, will or may be used as security for the Series 2016 Bonds. In addition, it is understood that the Authority intends to assign its interest, as lessee, in and to this Ground Lease to the Trustee to secure the Series 2016 Bonds. The City hereby consents to such assignment.

ARTICLE VIII

TITLE; LIMITATIONS ON ENCUMBRANCES

Section 8.1 Title to the Property and the 2016 Project. Subject to the leasehold interest created hereby, title to the Property shall at all times be held in the name of the City. Except personal property purchased by the City at its own expense, title to the 2016 Project and any and all additions and modifications thereto and replacements thereof shall be held in the name of the Authority. The City shall have no right, title or interest in the 2016 Project or any additions and modifications thereto or replacements thereof, except its reversionary rights by law as lessor and except as expressly set forth herein and in the Master Lease. On termination of this Ground Lease, the City shall become the title owner of all improvements affixed to the Property, including the 2016 Project. The Authority agrees to execute such documents on termination of this Ground Lease as are required to convey said improvements to the City as herein provided.

Section 8.2 No Encumbrance, Mortgage or Pledge. Neither the Authority nor the City shall directly or indirectly create, incur, assume or suffer to exist any mortgage, pledge, lien, charge, encumbrance or claim on or with respect to the Property, except for Permitted Encumbrances as defined in the Master Lease.

Section 8.3 Encumbrance of Leasehold Interest. The Authority may encumber by mortgage or deed of trust, and may convey, assign or sublease, its leasehold interest and estate in the Property, alone or together with its interests in the 2016 Project as a whole, for the benefit of the holders of the Series 2016 Bonds. The execution of any such mortgage, deed of trust, assignment or other instrument or the foreclosure thereof or any sale thereunder, either by judicial proceeding or by virtue of any power reserved in such mortgage, deed of trust, assignment or conveyance by the Authority for the benefit of the holders of the Series 2016 Bonds, or the exercising of any right, power or privilege set forth therein, shall not be held as a violation of any of the terms or conditions hereof. The assignee or grantee of any conveyance or assignment of the Authority may, at its option, at any time before the rights of the Authority have been terminated as provided herein, pay any of the Rentals due hereunder or pay any taxes and assessments, or do any other act or thing required of the Authority by the terms hereof, or do any act or thing which may be necessary or proper to be done in the observance of the covenants and conditions thereof, or to prevent the termination hereof; all payments so made, and all things so done and performed by such party or entity shall be effective to prevent a forfeiture of the rights of the Authority hereunder as the same would have been if done and performed by said Authority.

ARTICLE IX

MAINTENANCE, TAXES AND OTHER CHARGES

Section 9.1 Maintenance of the Property by the Authority. In the event that the Ground Lease Term extends beyond the date of termination of the Master Lease, the Authority agrees that at all times during the Ground Lease Term the Authority will maintain, preserve and keep the Property or cause the Property to be maintained, preserved and kept with the appurtenances and every part and parcel thereof, in good repair, working order and condition and that the Authority will from time to time make or cause to be made all necessary and proper repairs, replacements and renewals with respect to the Property, so that it will continue to be suitable for use as contemplated by the Master Lease.

Section 9.2 Other Governmental Charges and Utility Charges. In the event that the Ground Lease Term extends beyond the date of termination of the Master Lease and in the event that the Property or any portion thereof shall, for any reason, be deemed subject to taxation, assessments or charges lawfully made by any governmental body which may be secured by a lien against the Property, the Authority shall pay an amount equal to the amount of all such taxes, assessments and governmental charges then due. With respect to special assessments or other governmental charges which may be lawfully paid in installments over a period of years, the Authority shall be obligated to pay such amounts only for such installments as are required to be paid during the Ground Lease Term. In the event that the Ground Lease Term extends beyond the date of termination of the Master Lease, the Authority shall also pay as the same respectively become due, all gas, water, steam, electricity, heat, power, telephone, utility and other charges incurred in the operation, maintenance, use, occupancy and upkeep of the Property.

The Authority may, at the expense and in the name of the Authority, in good faith contest any such taxes, assessments, utility and other charges and, in the event of any such contest, may permit the taxes, assessments or other charges so contested to remain unpaid during the period of such contest and any appeal therefrom. In the event that the Authority shall fail to pay any of the foregoing items required by this Section 9.2 to be paid by the Authority, the City may (but shall be under no obligation to) pay the same, which amounts, together with interest thereon at the rate of ten percent (10%) per annum, the Authority agrees to pay.

ARTICLE X

CONDEMNATION; DESTRUCTION

If during the Ground Lease Term, title to, or the temporary or permanent use of the Property or any portion thereof shall be taken under the exercise of the power of eminent domain by any governmental body or by any person, firm or corporation acting under governmental authority, the Authority and the City shall cooperate in the collection and disposition of the proceeds of condemnation such that the net proceeds of such condemnation allocable to the Property and to the Authority's leasehold interest in the Property created hereunder shall be deposited and utilized by the Trustee in accordance with the provisions of the Master Lease and the Indenture and the net proceeds of such condemnation allocable solely to the City's reversionary interest in the Property will be payable to the City. Except as otherwise provided in the Master Lease, if during the Ground Lease Term, the 2016 Project or any material portion thereof, shall be destroyed (in whole or in part), or damaged by fire or other casualty, the Net Proceeds of any insurance policy shall be deposited and utilized by the Trustee in accordance with the provisions of the Master Lease and the Indenture.

ARTICLE XI

DISCLAIMER OF WARRANTIES; COMPLIANCE WITH LAWS AND RULES; OTHER COVENANTS

Section 11.1 Further Assurances and Corrective Instruments. The City and the Authority agree that they will, from time to time, execute, acknowledge and deliver, or cause to be executed, acknowledged and delivered, such supplements hereto and such further instruments as may reasonably be required for correcting any inadequate or incorrect description of the Property hereby leased or intended so to be, or for carrying out the intention hereof.

Section 11.2 City and Authority Representatives. Whenever under the provisions hereof the approval of the City or the Authority is required, or the City or the Authority is required to take some action at the request of the other, such approval or such request shall be given for the City by the City Representative and for the Authority by the Authority Representative, and any party hereto and the Trustee shall be authorized to act on any such approval or request.

Section 11.3 Requirements of Law. During the Ground Lease Term, the City and the Authority shall observe and comply promptly with all laws, ordinances, orders, rules and regulations of the federal, state, county and city governments and of all courts or other governmental authorities having jurisdiction over the 2016 Project or any portion thereof and of all their respective departments, bureaus and officials, and of the insurance regulatory agencies having jurisdiction over the 2016 Project, or any portion thereof, or any other body exercising similar functions, and of all insurance companies writing policies covering the 2016 Project or any portion thereof, whether the same are in force at the commencement of the Ground Lease Term or may in the future be passed, enacted or directed.

ARTICLE XII

EVENTS OF DEFAULT AND REMEDIES

Section 12.1 Events of Default Defined. The following shall be an "Event of Default" under this Ground Lease: failure by the Authority to observe and perform any covenant, condition or agreement on its part to be observed or performed hereunder, for a period of ninety (90) days after written notice, specifying such failure and requesting that it be remedied, has been given to the Authority and the Trustee by the City, unless the City shall agree in writing to an extension of time prior to its expiration; provided, however, that if the failure stated in the notice cannot be corrected within the applicable period, the City shall not unreasonably withhold its consent to an extension of such time if corrective action shall be instituted by the Authority or the Trustee within the applicable period and diligently pursued until the default is corrected.

The foregoing provisions of this Section are subject to the following limitations: if, by reason of force majeure, the Authority shall be unable in whole or in part to carry out any agreement on its part herein contained, the Authority shall not be deemed in default during the continuance of such inability. The Authority agrees, however, to remedy with all reasonable dispatch the cause or causes preventing the Authority from carrying out its agreement; provided, however, that the settlement of strikes, lockout and other industrial disturbances shall be entirely within the discretion of the Authority, and the Authority shall not be required to make settlement of strikes, lockouts and other industrial disturbances by acceding to the demands of the opposing party or parties when such course is in the judgment of the Authority unfavorable to the Authority. A copy of any Notice required by this Section shall also be provided to the Trustee.

Section 12.2 Remedies on Default. Whenever any Event of Default referred to in Section 12.1 of this Ground Lease shall have happened and be continuing, the City, shall have the right, at its option without any further demand or notice, to take whatever action at law or in equity may appear necessary or desirable to enforce its rights under this Ground Lease.

Section 12.3 No Remedy Exclusive. No remedy herein conferred upon or reserved to the City is intended to be exclusive, and every such remedy shall be cumulative and shall be in addition to every other remedy given hereunder or now or hereafter existing at law or in equity. No delay or omission to exercise any right or power accruing upon an Event of Default shall impair any such right or power or shall be construed to be a waiver thereof, but any such right and power may be exercised from time to time and as often as may be deemed expedient. In order to entitle the City to exercise any remedy reserved in this Article XII, it shall not be necessary to give any notice, other than such notice as may be required in this Article XII.

Section 12.4 Agreement to Pay Attorney's Fees and Expenses. In the event that either party hereto shall default under any of the provisions hereof and the nondefaulting party shall employ attorneys or incur other expenses for the enforcement of performance or observance of any obligation or agreement on the part of the defaulting party herein

contained, the defaulting party agrees that it shall on demand therefor pay to the nondefaulting party the fees of such attorneys and such other expenses so incurred by the nondefaulting party, to the extent that such attorney's fees and expenses may be determined to be reasonable by a court of competent jurisdiction; provided, however, that the obligation of the City under this Section 12.4 shall be subject to the availability of City Funds and the obligation of the Authority shall be subject to the legal availability of such funds.

Section 12.5 No Additional Waiver Implied by One Waiver. In the event that any agreement contained herein should be breached by either party and thereafter waived by the other party, such waiver shall be limited to the particular breach so waived and shall not be deemed to waive any other breach hereunder.

Section 12.6 No Termination of Ground Lease Term. Notwithstanding the remedies provided above, the Ground Lease Term of this Ground Lease may not be terminated prior to the end of the Term described in Article IV hereof by reason of an Event of Default hereunder.

ARTICLE XIII

INSURANCE, INDEMNIFICATION AND ENVIRONMENTAL MATTERS

Section 13.1 Insurance. The Authority hereby covenants and agrees to at all times provide, maintain and keep in force or cause to be kept in force such insurance as set forth in Article IX of the Master Lease (as defined in the Indenture) with respect to the 2016 Project.

Section 13.2 Public Liability Insurance. Unless the City is otherwise required to carry the insurance required by Section 9.5 of the Master Lease, the Authority agrees to carry or cause to be carried public liability insurance with one or more reputable insurance companies in minimum amounts of $500,000 for personal injury or death to one person and $1,000,000 for personal injury or death for each occurrence and $300,000 for property damage for any occurrence. The insurance required by this Section may be by blanket insurance policy or policies or self-insurance. If self-insurance is not utilized, the policies may have a deductible clause in such amount as shall be approved by the Authority, the City and the Trustee or absent such approval $50,000.

Section 13.3 Workers' Compensation Coverage. Unless the City is otherwise required to carry such insurance pursuant to the Master Lease, at all times from the date hereof until the end of the Master Lease Term, the Authority shall maintain, or cause to be maintained, workers' compensation coverage with respect to officers, agents and employees of the Authority working in, on or about the 2016 Project, including coverage for occupational diseases.

Section 13.4 Indemnification Covenants. To the extent of the net proceeds of the insurance coverage of the Authority, the Authority shall and hereby agrees to indemnify and save the City harmless against and from all claims, by or on behalf of any person, firm, corporation or other legal entity arising from the conduct or management of, or from any work or thing done on, the 2016 Project during the Lease Term from: (i) any condition of the 2016 Project; and (ii) any act or negligence of the Authority or of any of its agents, contractors or employees or any violation of law or the breach of any covenant or warranty hereunder. To the extent of available moneys as set forth above, or in the event the Authority is self insured, or the insurance coverage has a deductible amount, then from moneys to be appropriated under budget proceedings for future years, if such appropriations are then made, the Authority shall indemnify and save the City harmless, from any such claim arising as aforesaid from (i) or (ii) above, or in connection with any action or proceeding brought thereon and, upon notice from the City, shall defend it in any action or proceeding.

In exchange for the Authority's agreement to indemnify the City as provided in this Section, the City hereby agrees to assert any cause of action that it might individually have against any third parties for the benefit of the Authority. Furthermore, in no event will the City voluntarily settle or consent to the settlement of any proceeding arising out of any claim applicable to the 2016 Project without the written consent of the Authority.

Section 13.5 Environmental Matters. The City hereby makes the following covenants, warranties, representations and promises with respect to the Property for the benefit of the Authority, the Trustee and the owner of the Bonds:

(a) The City will comply with any and all applicable federal, State, and local laws, rules, regulations or orders with respect to the discharge and remediations of any hazardous or toxic wastes, and shall pay, to the extent permitted by law and solely from and to the extent of City Funds (as defined in the Master Lease) at its sole cost and expense when due, the cost of any future reasonable and appropriate remediations of any such wastes, and shall take appropriate steps to keep the Property free of any lien imposed pursuant to such laws, rules, regulations or orders.

(b) In the event that the Environmental Protection Agency, any agency of the State, or any other federal, State or local governmental agency should rightfully initiate any action for the remediation of any "hazardous substance," as that term is defined in Title 42 of the United States Code, Section 9601(14), from the Property, the City hereby agrees, to the extent permitted by law and solely from and to the extent of City Funds, to indemnify and hold harmless the Authority, the Trustee and the owners of the Bonds from any liability, costs and expenses, including reasonable attorney's fees, incurred in such action.

(c) To the best knowledge of the City and after reasonable investigation, the Property does not contain any hazardous or toxic substances, wastes or materials as defined in any applicable Federal, State or local laws or regulations.

ARTICLE XIV

MISCELLANEOUS

Section 14.1 Notices. All notices, certificates or other communications hereunder shall be sufficiently given and shall be deemed given when delivered or mailed by registered mail, postage prepaid, addressed as follows: if to the Authority, Municipal Building Authority of West Valley City, Utah, 3600 Constitution Blvd., West Valley City, Utah, 84119, Attention: Chair/President; if to the City, 3600 Constitution Blvd., West Valley City, Utah, 84119, Mayor; and if to the Trustee as provided in the Master Lease. The Authority, the City and the Trustee, may, by notice given hereunder, designate any further or different addresses to which subsequent notices, certificates or other communications shall be sent.

Section 14.2 Binding Effect. This Ground Lease shall inure to the benefit of and shall be binding upon the Authority, the City and their respective successors and assigns.

Section 14.3 Severability. In the event any provision of this Ground Lease shall be held invalid or unenforceable by any court of competent jurisdiction, such holding shall not invalidate or render unenforceable any other provision hereof.

Section 14.4 Amendments, Changes and Modifications. Subsequent to the issuance of the Series 2016 Bonds and prior to their payment in full (or provision for the payment thereof having been made in accordance with the provisions of the Indenture), and except as otherwise herein expressly provided, this Ground Lease may not be effectively amended, changed, modified, altered or terminated without the written consent of Trustee.

Section 14.5 Execution in Counterparts. This Ground Lease may be simultaneously executed in several counterparts, each of which shall be an original and all of which shall constitute but one and the same instrument.

Section 14.6 Applicable Law. This Ground Lease shall be governed by and construed in accordance with the laws of the State.

Section 14.7 Captions. The captions or headings in this Ground Lease are for convenience only and in no way define, limit or describe the scope or intent of any provisions or sections of this Ground Lease.

Section 14.8 Assignment. This Ground Lease may be assigned and reassigned by the Authority and the Authority's interest in the Property transferred in accordance with the terms hereof and of the Master Lease. This Ground Lease may not be assigned by the City for any reason.

Section 14.9 No Merger. The parties hereto agree that the doctrine of merger shall not operate to destroy or terminate the leasehold interest granted to the Authority under this Ground Lease.

IN WITNESS WHEREOF, the Authority has caused this Ground Lease to be executed with its corporate seal hereunto affixed and attested by its duly authorized officers. The City has executed this Ground Lease in its name with its seal hereunto affixed and attested by its duly authorized officers. All of the above occurred as of the date first above written.

MUNICIPAL BUILDING AUTHORITY
OF WEST VALLEY CITY, UTAH

(SEAL)

By:_____
Chair/President

ATTEST AND COUNTERSIGN:

By:_____
Secretary-Treasurer

WEST VALLEY CITY, UTAH

(SEAL)

By:_____
Mayor

ATTEST AND COUNTERSIGN:

By:_____
City Recorder

STATE OF UTAH)
: ss.
COUNTY OF SALT LAKE)

On _____, 2016 the foregoing instrument was acknowledged before me by _____ and _____, the Chair/President and Secretary-Treasurer, respectively, of the Municipal Building Authority of West Valley City, Utah.

_____
NOTARY PUBLIC

STATE OF UTAH)
: ss.
COUNTY OF SALT LAKE)

On _____, 2016, the foregoing instrument was acknowledged before me by _____ and _____, the Mayor and City Recorder, respectively, of West Valley City, Utah.

_____
NOTARY PUBLIC

EXHIBIT A

DESCRIPTION OF PROPERTY SITE FOR
2016 PROJECT

A description of that certain Real Property located in Salt Lake County, Utah, to wit:

WHEN RECORDED, RETURN TO:

Bradley D. Patterson
Ballard Spahr LLP
201 South Main Street, Suite 800
Salt Lake City, Utah 84111

LEASEHOLD DEED OF TRUST, ASSIGNMENT OF RENTS AND SECURITY AGREEMENT

THIS LEASEHOLD DEED OF TRUST, ASSIGNMENT OF RENTS AND SECURITY AGREEMENT ("Deed of Trust") is made as of [June 1], 2016, by and among the Municipal Building Authority of West Valley City, Utah, a nonprofit corporation duly organized under the laws of the State of Utah ("Trustor") whose address for purposes of this agreement is 3600 Constitution Blvd. West Valley City, Utah, 84119; and _____, whose place of business is _____ ("Trustee"), as trustee under this Deed of Trust, and _____, whose place of business is _____, Salt Lake City, Utah 841__ (the "Beneficiary"), as trustee under a General Indenture of Trust dated as of [June 1], 2016 (the "General Indenture"), as supplemented by a First Supplemental Indenture of Trust dated as of [June 1], 2016 (the "First Supplemental Indenture" and collectively with the General Indenture, the "Indenture") executed in connection with the issuance of the $_____ Municipal Building Authority of West Valley City, Utah, Lease Revenue and Refunding Bonds, Series 2016 (the "Series 2016 Bonds").

W I T N E S S E T H:

FOR GOOD AND VALUABLE CONSIDERATION, including the indebtedness herein recited and the trust herein created, the receipt of which is hereby acknowledged, Trustor hereby irrevocably grants, transfers, assigns, conveys and warrants to Trustee for the benefit of the Beneficiary, IN TRUST, WITH POWER OF SALE, under and subject to the terms and conditions hereinafter set forth, that estate created by and all right, title and interest of the Trustor as lessee under that certain Ground Lease Agreement dated as of [June 1], 2016 (the "Ground Lease") by and between West Valley City, Utah (the "City"), as lessor, and Trustor, as lessee, which Ground Lease demises and leases all that property situated in Salt Lake County, Utah described in Exhibit A attached hereto (the "Property"), including, but not limited to, all of Trustor's right, title and interest in and to all the improvements on said Property and appurtenances. The interests of Trustor in the Property as described in the attached Exhibit A and all of the improvements and appurtenances relating thereto are collectively referred to hereinafter as the "Project";

TOGETHER WITH all rents, issues, profits, privileges, licenses, royalties, income and other benefits derived from the Project (collectively the "rents");

TOGETHER WITH all right, title and interest of Trustor in and to all leases or subleases covering the Project or any portion thereof now or hereafter existing or entered into, and all right, title and interest of Trustor thereunder, including, without limitation, all cash or security deposits, advance rentals, and deposits and payments of similar nature;

TOGETHER WITH all right, title and interest of Trustor in and to all options to purchase or lease the Project or any portion thereof or interest thereon, and any greater estate in the Project owned or hereafter acquired;

TOGETHER WITH all interests, estate or other claims, both in law and in equity, which Trustor now has or may hereafter acquire in the Project;

TOGETHER WITH all right, title and interest of Trustor in and to all easements, rights-of-way and rights used in connection with or as a means of access thereto, and all tenements, hereditaments and appurtenances thereof and thereto;

TOGETHER WITH all right, title and interest of Trustor, now owned or hereafter acquired, in and to any land lying within the right-of-way of any street, open or proposed, adjoining the Project, and any and all sidewalks, alleys and strips and gores of land adjacent to or used in connection with the Project;

TOGETHER WITH all right, title and interest of Trustor in and to any and all buildings and improvements now or hereafter erected on the Property, including, but not limited to, the fixtures, fittings, and other articles attached to said buildings and improvements financed or refinanced with proceeds of the Series 2016 Bonds or any Additional Bonds or Refunding Bonds (each as defined herein), including but not limited to all machinery, equipment, material, appliances and fixtures now or hereafter installed or placed in said building or on the Property for the generation or distribution of air, water, heat, electricity, light, fuel or refrigeration or for ventilating or air conditioning purposes or for sanitary or drainage purposes, for the removal of dust, refuse or garbage, and including stoves, ranges, cabinets, laundry equipment, all elevators, awnings, window shades, venetian blinds, drapery rods and brackets, screens, floor coverings, including all rugs and carpets attached to floors, lobby furnishings and incinerators and all other similar items and things; all of the items and things so specified and all other similar items or things, whether now or hereafter placed on the Property, being hereby declared to be, and in all circumstances, shall be construed to be, for and in connection with the purposes and powers of this Deed of Trust, things affixed to and a part of the Project described herein; the specific enumerations herein not excluding the general (the "Improvements"); excepting any personal property or fixtures of any tenant which are not financed or refinanced with proceeds of the Series 2016 Bonds or any Additional Bonds or Refunding Bonds; and

TOGETHER WITH all the estate, interest, right, title and other claim or demand, including claims or demands with respect to the proceeds of insurance in effect with respect thereof, which Trustor now has or may hereafter acquire in the Project, and any and all awards made for the taking from the Trustor by eminent domain, or by any proceeding or purchase in lieu thereof, of the whole or any part of the Project, including without limitation any awards resulting from a change of grade of streets and awards for severance damages; and

TOGETHER WITH all right, title and interest of Trustor in and to all tangible personal property financed or refinanced with proceeds of the Series 2016 Bonds or any Additional Bonds or Refunding Bonds (the "Personal Property") owned by Trustor and now or at any time hereafter located on or at the Project or used in connection therewith, including, but not limited to: furnishings, machinery and equipment, together with all substitutions, replacements and renewals thereof.

The entire estate, Property and interest hereby conveyed to Trustee as described above may hereafter be referred to as the "Trust Estate." Notwithstanding the breadth of the foregoing, the property covered by this Deed of Trust shall not include: (i) personal property which may be owned by lessees or other occupants of any portion of the Project, rather than by Trustor, or which may be leased by such lessees or other occupants from a party other than Trustor; or (ii) material, equipment, tools, machinery or other personal property which has been brought upon the Project only for use in construction, maintenance or repair and which is not intended to remain after the completion of such construction, maintenance or repair, and which is not necessary for occupancy, maintenance or use of the Project or the improvements thereon, provided, however, that this provision shall not limit Trustor's right to assert a landlord's lien against a defaulting tenant.

FOR THE PURPOSES OF SECURING:

(A) (1) Payment of the principal, interest and premium, if any, of the Series 2016 Bonds of Trustor, issued pursuant to the Indenture, and payable at the times, in the manner and with interest and premium, if any, as therein set forth, and any extensions and/or renewals or modifications thereof; (2) payment of the principal, interest and premium, if any, on any Additional Bonds or Refunding Bonds (these and all terms herein commencing with initial capital letters and not otherwise defined herein shall have meanings as defined in the Indenture) issued pursuant to the Indenture, and payable at the times, in the manner and with interest and premium as therein set forth, and any extensions and/or renewals or modifications thereof (the Series 2016 Bonds and Additional Bonds and Refunding Bonds are collectively referred to herein as the "Bonds"); (3) the performance of each agreement of Trustor contained in the Bonds, the Indenture, the Master Lease (as defined in the Indenture) with respect to the Project and this Deed of Trust and any other instrument securing payment of the Bonds; and (4) the payment of all sums expended or advanced by Beneficiary under or pursuant to the terms of this Deed of Trust (including, but not limited to the payments outlined in Sections 1.11 and 1.18 of this Deed of Trust), any other instrument securing payment of the Bonds, the Indenture or the Master Lease, together with interest thereon as provided in the Indenture.

(B) Performance of all obligations of Trustor under the Indenture and each agreement of Trustor incorporated by reference therein or herein, or contained therein or herein.

(C) Performance of all obligations of Trustor contained in this Deed of Trust, the Bonds, the Indenture and any other instrument given to evidence or further secure the payment and performance of any obligation secured hereby.

This Deed of Trust, the Bonds, the Indenture, the Ground Lease, the Master Lease and any other instrument given to evidence or further secure the payment and performance of any obligation secured hereby may hereafter be referred to as the "Bond Documents."

TO PROTECT THE SECURITY OF THE BOND DOCUMENTS TRUSTOR HEREBY COVENANTS AND AGREES AS FOLLOWS:

ARTICLE I

COVENANTS AND AGREEMENTS OF TRUSTOR

1.1 Payment of Secured Obligations. Trustor hereby covenants and agrees to pay when due the principal of, premium, if any, and the interest on, the indebtedness evidenced by the Bonds (as set forth therein), all charges, fees and all other sums as provided in the Bond Documents, and the principal of, and interest on, any future advances secured by this Deed of Trust.

1.2 Maintenance, Repair, Alterations. Trustor hereby covenants and agrees to keep the Trust Estate or cause the Trust Estate to be kept in good condition and repair; not to remove, demolish or materially alter (except such alterations as may be required by laws, ordinances or regulations) any buildings or fixtures constituting part of the Improvements in such a manner as to in any way damage the Improvements or in any way reduce the fair rental value of the Improvements to less than the fair rental value of the Improvements immediately prior to such alteration; to complete promptly and in good and workmanlike manner any improvement which may be constructed on the Project and, to the extent provided in the Indenture and in the Master Lease, promptly restore in like manner any Improvements which may be damaged or destroyed thereon, and to pay when due all claims for labor performed and materials furnished therefor, to comply with all laws, ordinances, regulations, covenants, conditions and restrictions now or hereafter affecting the Trust Estate or any part thereof or requiring any alterations or improvements; not to commit or permit any waste or deterioration of the Trust Estate, to keep and maintain or cause to be kept and maintained, grounds, sidewalks, roads, parking and landscaped areas in good and neat order and repair; not to commit, suffer or permit any act to be done in or upon the Trust Estate in violation of any law, ordinance or regulation. Trustee, upon presentation to it of an affidavit signed by Beneficiary, setting forth facts showing a default by Trustor under this Section, is authorized to accept as true and conclusive all facts and statements therein, and to act thereon hereunder.

1.3 Required Insurance. Trustor hereby covenants and agrees to at all times provide, maintain and keep in force or cause to be kept in force such insurance as is set forth in Article IX of the Master Lease with respect to the Improvements.

1.4 Payment of Premiums. In the event Trustor fails to provide (as may be evidenced by certificate), maintain, keep in force or deliver and furnish to Beneficiary policies of insurance required by Article IX of the Master Lease, Beneficiary, in addition to all other rights it may have hereunder, including, without limitation, those set forth in Article III hereof, may, but shall not be required to, procure such insurance or single interest insurance for such risks covering Beneficiary's interest, and Trustor will pay, or cause to be paid, all premiums thereon promptly upon demand by Beneficiary, and until such payment is made by Trustor therefor the amount of all such premiums which have been paid by Beneficiary shall bear interest at a rate per annum provided in Article IX of the Master Lease. Trustor shall, upon Beneficiary's reasonable request, deposit, or cause to be deposited, with Beneficiary in monthly installments, an amount equal to one-twelfth of the estimated aggregate annual insurance premiums on all policies of insurance

required by this Deed of Trust. Trustor further agrees, upon Beneficiary's request, to cause all bills, statements or other documents relating to the foregoing insurance premiums to be sent or mailed directly to Beneficiary. Upon receipt of such bills, statements or other documents, and provided Trustor has deposited sufficient funds with Beneficiary pursuant to this Section 1.4, Beneficiary shall pay such amounts as may be due thereunder out of the funds so deposited with Beneficiary. If at any time and for any reason the funds deposited with Beneficiary are or will be insufficient to pay such amounts as may then or subsequently be due, Beneficiary shall notify Trustor and Trustor shall immediately deposit, or cause to be deposited, an amount equal to such deficiency with Beneficiary. Notwithstanding the foregoing, nothing contained herein shall cause Beneficiary to be deemed a trustee of said funds or to be obligated to pay any amounts in excess of the amount of funds deposited with Beneficiary pursuant to this Section 1.4.

1.5 Insurance Proceeds. After the happening of any casualty to the Trust Estate or any part thereof, Trustor shall give prompt written notice thereof to Beneficiary.

(a) In the event of any damage or destruction of the Project, Trustor shall apply the insurance proceeds in the manner set forth in Article X of the Master Lease.

(b) In the event of such loss or damage, all proceeds of insurance shall be payable pursuant to subparagraph (a) above. Except as otherwise provided in the Master Lease, Trustor may settle, adjust or compromise any claims for loss, damage or destruction under any policy or policies of insurance only with written approval of Beneficiary.

(c) Except to the extent that insurance proceeds are received by Trustor and applied to the indebtedness secured hereby, pursuant to the Indenture and the Master Lease, nothing herein contained shall be deemed to excuse Trustor from repairing or maintaining the Trust Estate as provided in Section 1.2 hereof or restoring all damage or destruction to the Trust Estate, regardless of whether or not there are insurance proceeds available or whether any such proceeds are sufficient in amount, and the application or release by Beneficiary of any insurance proceeds shall not cure or waive any default or notice of default under this Deed of Trust or invalidate any act done pursuant to such notice.

1.6 Assignment of Policies Upon Foreclosure. In the event of foreclosure of this Deed of Trust or other transfer of title or assignment of the Trust Estate in extinguishment, in whole or in part, of the debt secured hereby, all right, title and interest of Trustor in and to all policies of insurance required by this Deed of Trust shall inure to the benefit of and pass to the successor in interest to Trustor or the purchaser or grantee of the Trust Estate.

1.7 Indemnification; Subrogation; Waiver of Offset.

(a) If Beneficiary is made a party defendant to any litigation, commenced by anyone other than Trustor, concerning this Deed of Trust or the

Trust Estate or any part thereof or interest therein, or the occupancy thereof by Trustor, except in cases of fraud, gross negligence or willful misconduct on the part of Beneficiary, then Trustor shall, to the extent permitted by law, indemnify, defend and hold Beneficiary harmless from and against all liability by reason of said litigation (including any appeals), including reasonable attorneys' fees and expenses incurred by Beneficiary in any such litigation, whether or not any such litigation is prosecuted to judgment. If Beneficiary commences an action against Trustor to enforce any of the terms hereof or because of the breach by Trustor of any of the terms hereof, or for the recovery of any sum secured hereby, Trustor shall pay to Beneficiary reasonable attorneys' fees and expenses actually incurred (including Beneficiary's attorney's fees and costs associated with all appeals), and the right to such attorney's fees and expenses shall be deemed to have accrued on the commencement of such action, and shall be enforceable whether or not such action is prosecuted to judgment. If Trustor breaches any term of this Deed of Trust, Beneficiary may employ an attorney or attorneys to protect its rights hereunder, and in the event of such employment following any breach by Trustor, Trustor shall pay Beneficiary reasonable attorney's fees and expenses incurred by Beneficiary (including those associated with any appeal), whether or not an action is actually commenced against Trustor by reason of breach.

(b) Trustor waives any and all right to claim or recover against Beneficiary, its officers, employees, agents and representatives, for loss or damage to Trustor, the Trust Estate, Trustor's property or the property of others under Trustor's control from any cause insured against or required to be insured against by the provisions of this Deed of Trust.

(c) All sums payable by Trustor hereunder shall be paid without notice, demand, counterclaim, setoff, recoupment, deduction or defense (except payment) and without abatement, suspension, deferment, diminution or reduction, and the obligations and liabilities of Trustor hereunder shall in no way be released, discharged or otherwise affected (except as expressly provided herein) by reason of: (i) any damage to or destruction of or any condemnation or similar taking of the Trust Estate or any part thereof; (ii) any restriction or prevention of or interference with any use of the Trust Estate or any part thereof; (iii) any title defect or encumbrance or any eviction from the Project or any part thereof by title paramount or otherwise; or (iv) any bankruptcy, insolvency, reorganization, composition, adjustment, dissolution, liquidation or other like proceeding relating to Beneficiary, or any action taken with respect to this Deed of Trust by any trustee or receiver of Beneficiary, or by any court, in any such proceeding; whether or not Trustor shall have notice or knowledge of any of the foregoing.

1.8 Taxes and Impositions.

(a) Trustor agrees to pay, prior to delinquency, all real property taxes and assessments, general and special, and all other taxes and assessments of any kind or nature whatsoever, including without limitation non-governmental levies or assessments such as maintenance charges, association dues or charges or fees,

and levies or charges resulting from covenants, conditions and restrictions affecting the Trust Estate, which are assessed or imposed upon the Trust Estate or become due and payable, and which create or may create a lien upon the Trust Estate, or any part thereof, or upon any equipment or other facility used by Trustor in the operation or maintenance thereof (all of which taxes, assessments and other governmental charges of like nature are hereinafter referred to as "Impositions"); provided, however, that if, by law, any such Imposition is payable, or may at the option of the taxpayer be paid, in installments, Trustor may pay the same together with any accrued interest on the unpaid balance of such Imposition in installments as the same become due and before any fine, penalty, interest or cost may be added thereto for the nonpayment of any such installment and interest.

(b) If any time after the date hereof there shall be assessed or imposed (i) a tax or assessment on the Trust Estate in lieu of or in addition to the Impositions payable by Trustor pursuant to subparagraph (a) hereof, or (ii) a license fee, tax or assessment imposed on Beneficiary and measured by or based in whole or in part upon the amount of the outstanding obligations secured hereby, then all such taxes, assessments, or fees shall be deemed to be included within the term "Impositions" as defined in subparagraph (a) hereof, and Trustor shall pay and discharge the same as herein provided with respect to the payment of Impositions. Anything to the contrary notwithstanding, Trustor shall have no obligation to pay any franchise, estate, inheritance, income, excess profits or similar tax levied on Beneficiary or on the obligations secured hereby.

(c) Trustor covenants to furnish Beneficiary within thirty (30) days after the date upon which any such Imposition is due and payable by Trustor, official receipts of the appropriate taxing authority or other proof satisfactory to Beneficiary, evidencing the payment thereof.

(d) Trustor covenants and agrees not to suffer, permit or initiate the joint assessment of the real and personal property, or any other procedure whereby the lien of the real property taxes and the lien of the personal property taxes shall be assessed, levied or charged to the Trust Estate as a single lien.

(e) If requested by Beneficiary, Trustor shall cause to be furnished to Beneficiary a tax reporting service covering the Trust Estate of the type, duration and with a company satisfactory to Beneficiary.

(f) Trustor has the right to contest Impositions to the extent permitted by Section 9.3 of the Master Lease.

1.9 Utilities. Trustor hereby covenants and agrees to pay when due all utility charges which are incurred by Trustor for the benefit of the Trust Estate or which may become a charge or lien against the Trust Estate for gas, electricity, water or sewer services furnished to the Trust Estate and all other assessments or charges of a similar

nature, whether public or private, affecting the Trust Estate or any portion thereof, whether or not such taxes, assessments or charges are liens thereon.

1.10 Actions Affecting Trust Estate. Trustor hereby covenants and agrees to appear in and contest any action or proceeding purporting to affect the security hereof or the rights or powers of Beneficiary or Trustee; and to pay all costs and expenses, including cost of evidence of title and attorney's fees, in any such action or proceeding in which Beneficiary or Trustee may appear.

1.11 Actions by Trustee and/or Beneficiary to Preserve Trust Estate. Should Trustor fail to make any payment or to do any act as and in the manner provided in any of the Bond Documents, Beneficiary and/or Trustee, each in its own discretion, without obligation so to do but without releasing Trustor from any obligations, may make or do the same in such manner and to such extent as either may deem necessary to protect the security hereof. In connection therewith (without limiting their general powers), Beneficiary and/or Trustee shall have and are hereby given the right, but not the obligation (i) to enter upon and take possession of the Trust Estate; (ii) to make additions, alterations, repairs and improvements to the Trust Estate which they or either of them may consider necessary or proper to keep the Trust Estate in good condition and repair; (iii) to appear and participate in any action or proceeding affecting or which may affect or appears to affect the security of this Deed of Trust (including condemnation or eminent domain proceedings) or which may result in the creation of any lien (except the lien created by the Indenture) against the Trust Estate; and (iv) in exercising such powers, to pay necessary expenses, including employment of counsel or other necessary or desirable consultants. Trustor shall, immediately upon demand therefor by Beneficiary, pay all costs and expenses incurred by Beneficiary in connection with the exercise by Beneficiary of the foregoing rights, including without limitation, costs of evidence of title, court costs, appraisals, surveys and attorney's fees, together with interest thereon accruing at the rate set forth in the Indenture.

1.12 Survival of Warranties. Subject to the limitations set forth in Section 5.9 herein, Trustor hereby covenants and agrees to fully and faithfully satisfy and perform the obligations of Trustor contained in the Bond Documents and each agreement of Trustor incorporated by reference therein or herein, and any modification or amendment thereof. All representations, warranties and covenants of Trustor contained therein or incorporated by reference shall survive funding of the loan evidenced by the Bonds and shall remain continuing obligations, warranties and representations of Trustor during any time when any portion of the obligations secured by this Deed of Trust remain outstanding.

1.13 Eminent Domain. Should the Trust Estate, or any material part thereof or interest therein, be taken from Trustor or damaged by reason of any public improvement or condemnation proceeding, or in any other manner ("Condemnation"), or should Trustor receive any notice or other information regarding such proceeding, Trustor shall give prompt written notice thereof to Beneficiary and all proceeds payable therefrom shall be utilized in the manner set forth in Article X of the Master Lease.

1.14 Additional Security. In the event Beneficiary at any time holds additional security for any of the obligations secured hereby, it may enforce the sale thereof or otherwise realize upon the same, at its option, either before or concurrently herewith or after a sale is made hereunder.

1.15 Appointment of Successor Trustee. Beneficiary may, from time to time, by complying with the provisions of the applicable law of the State of Utah substitute a successor or successors to the Trustee named herein or acting hereunder.

1.16 Successors and Assigns. This Deed of Trust applies to, inures to the benefit of and binds all parties hereto, their heirs, legatees, devisees, administrators, executors, successors and assigns. The term "Beneficiary" shall be deemed to include the Registered Owners of the Bonds and any trustee therefor, whether or not named as Beneficiary herein.

1.17 Inspections. Beneficiary, or his agents, representatives or workmen, are authorized to enter at any reasonable time upon or in any part of the Trust Estate for the purpose of inspecting the Trust Estate and performing any of the acts it is authorized to perform under the terms of any of the Bond Documents.

1.18 Liens. Trustor hereby covenants and agrees to pay and promptly discharge in accordance with the terms thereof or of the indebtedness secured thereby, at Trustor's cost and expense, all liens, encumbrances and charges upon the Trust Estate, or any part thereof or interest therein; provided that the existence of any mechanic's, laborer's, materialman's, supplier's or vendor's lien or right thereto shall not constitute a violation of this Section if payment is not yet due under the contract which is the foundation thereof and if such contract does not postpone payment for more than 60 days after the performance thereof. Trustor shall have the right to contest in good faith the validity of any such lien, encumbrance or charge. In the event of any such contest, the Trustor may permit the lien, encumbrance or charge so contested to remain unpaid during the period of such contest and any appeal therefrom unless the Trustee or Beneficiary shall notify the Trustor that, in the opinion of Independent Counsel, by nonpayment of any such items the security afforded pursuant to the Indenture and the Master Lease or this Deed of Trust will be materially endangered or the Trust Estate or any portion thereof will be subject to loss or forfeiture, in which event such lien, encumbrance or charge shall be paid forthwith. Prior to commencing such contest, Trustor shall first deposit, or cause to be deposited, with Beneficiary, or in court, a bond or other security satisfactory to Beneficiary, at Beneficiary's election, in such amounts as Beneficiary shall reasonably require, but not more than one hundred ten percent (110%) of the amount of the claim, and provided further that Trustor shall thereafter diligently proceed to cause such lien, encumbrance or charge to be removed and discharged. If Trustor shall fail to discharge any such lien, encumbrance or charge, then, in addition to any other right or remedy of Beneficiary, Beneficiary may, but shall not be obligated to, discharge or purchase the same, either by paying the amount claimed to be due, or by procuring the discharge of such lien by depositing in court a bond or the amount claimed or otherwise giving security for such claim, or in such manner as is or may be prescribed by law.

1.19 Trustee's Powers. At any time, or from time to time, without liability therefor, and without notice, upon written request of Beneficiary and presentation of this Deed of Trust, and without affecting the personal liability of any person for payment of the indebtedness secured hereby or the effect of this Deed of Trust upon the remainder of said Trust Estate, Trustee may, (i) reconvey any part of said Trust Estate; (ii) consent in writing to the making of any map or plat thereof; or (iii) join in granting any easement or creating any restriction affecting this Deed of Trust or any agreement subordinating the lien or charge hereof.

1.20 Beneficiary's Powers. Without affecting the liability of any other person liable for the payment of any obligation herein mentioned, and without affecting the lien or charge of this Deed of Trust upon any portion of the Trust Estate not then or theretofore released as security for the full amount of all unpaid obligations, Beneficiary may, from time to time and without notice (i) release any person so liable, (ii) extend the maturity or alter any of the terms of any such obligation, (iii) grant other indulgences, (iv) release or reconvey, or cause to be released or reconveyed at any time at Beneficiary's option any parcel, portion or all of the Trust Estate, (v) take or release any other or additional security for any obligation herein mentioned, or (vi) make compositions or other arrangements with debtors in relation thereto. Trustor hereby consents to the foregoing powers and rights of Beneficiary, and, to the extent permitted by law, waives any right to assert that such actions by the Beneficiary shall constitute a breach by the Beneficiary under this Deed of Trust, under any of the Bond Documents or under applicable law.

ARTICLE II

ASSIGNMENT OF RENTS, ISSUES AND PROFITS

2.1 Assignment of Rents. Trustor hereby assigns and transfers to Beneficiary all the rents, issues and profits of the Trust Estate, and hereby gives to and confers upon Beneficiary the right, power and authority to collect such rents, issues and profits. Trustor irrevocably appoints Beneficiary its true and lawful attorney-in-fact, at the option of Beneficiary at any time and from time to time, to demand, receive and enforce payment, to endorse instruments payable to Trustor, and to give receipts, releases and satisfactions for all such rents, issues and profits and apply the same to the indebtedness secured hereby. The assignment of the rents, issues and profits of the Trust Estate in this Article II is intended to be an absolute assignment from Trustor to Beneficiary and not merely the passing of a security interest.

2.2 Collection Upon Default. Upon any event of default under any of the Bond Documents, and after the passage of any applicable grace period, Beneficiary may, at any time without notice, either in person, by agent or by a receiver appointed by a court, and without regard to the adequacy of any security for the indebtedness hereby secured, enter upon and take possession of the Trust Estate, or any part thereof, and in its own name sue for or otherwise collect such rents, issues and profits of the Trust Estate, including those past due and unpaid, and apply the same, less costs and expenses of operation and collection, including attorneys' fees, upon any indebtedness secured hereby, and in such order as Beneficiary may determine. The collection of rents, issues and profits, or the entering upon and taking possession of the Trust Estate, or the application thereof as aforesaid, shall not cure or waive any default, notice of default, or notice of sale hereunder or invalidate any act done in response to such default or pursuant to such notice of default. Failure or discontinuance by Beneficiary at any time or from time to time to collect any such rents, issues or profits shall not in any manner affect the subsequent enforcement by Beneficiary of the right, power and authority to collect the same.

ARTICLE III

SECURITY AGREEMENT

3.1 Creation of Security Interest. Trustor hereby grants to Beneficiary a security interest in the Personal Property for the purpose of securing all obligations of Trustor contained in any of the Bond Documents or herein. This Deed of Trust shall be deemed the Security Agreement as defined in the Uniform Commercial Code of Utah and the remedies for any violation of the covenants, terms and conditions of the agreements herein contained shall be (i) as prescribed herein, or (ii) as provided by general law, or (iii) as to such part of the security which is also reflected in any financing statement or statements (the "Financing Statement") as provided by the specific statutory consequences now or hereafter enacted and specified in the Uniform Commercial Code of Utah, all at Beneficiary's sole election. The mention in any such Financing Statement of (1) the rights in or the proceeds of any fire and/or hazard insurance, (2) any award in eminent domain proceedings for a taking or for loss of value, or (3) the Trustor's interest as lessor in any present or future lease or rights to income growing out of the use and/or occupancy of the premises shall never be construed as in any wise altering any of the rights of Beneficiary as determined by this Deed of Trust or impugning the priority of the Beneficiary's lien granted hereby or by any other recorded document, but such mention in the Financing Statement is declared to be for the protection of Beneficiary in the event any court or judge shall at any time with respect to (1), (2) or (3) rule that notice of Beneficiary's priority of interest to be effective against a particular class of persons, divisions or entity of the Federal Government, must be filed in the Uniform Commercial Code records.

3.2 Warranties, Representations and Covenants of Trustor. Trustor hereby warrants, represents and covenants as follows:

Trustor is, and as to portions of the Personal Property to be acquired after the date hereof will be, the sole Owner of the Personal Property, free from any adverse lien, security interest, encumbrance or adverse claims thereon of any kind whatsoever except for the Permitted Encumbrances defined in the Master Lease and except for the security interest granted hereby. Trustor will notify Beneficiary of, and will defend the Personal Property against, all claims and demands of all persons at any time claiming the same or any interest therein.

Trustor will not sell the Personal Property without the prior written consent of Beneficiary unless said personal property is promptly replaced by personal property of like quality and value.

The Personal Property is not used or bought for personal, family or household purposes.

The Personal Property (with the exception of funds held by Beneficiary) will be kept on or at the Project and, except as otherwise provided in the Master Lease, Trustor will not remove the Personal Property from the Project without the prior written consent

of Beneficiary, except such portions or items of Personal Property which are consumed or worn out in ordinary usage, all of which shall be promptly replaced by Trustor.

Trustor maintains a place of business in the State of Utah and Trustor will immediately notify Beneficiary in writing of any change in its place of business as set forth in the beginning of this Deed of Trust.

At the request of Beneficiary, Trustor will join Beneficiary in executing one or more financing statements, continuation statements and renewals and amendments thereof pursuant to the Uniform Commercial Code of Utah in form satisfactory to Beneficiary, and will pay the cost of filing the same in all public offices wherever filing is deemed by Beneficiary to be necessary or desirable.

All covenants and obligations of Trustor contained herein relating to the Trust Estate shall be deemed to apply to the Personal Property whether or not expressly referred to herein.

ARTICLE IV

REMEDIES UPON DEFAULT

4.1 Events of Default. Any of the following events shall be deemed an event of default hereunder.

(a) Default shall be made in the payment of any installment of principal or interest or any other sum secured hereby; or

(b) There shall occur an Event of Default set forth in Section 9.1 of the Indenture, or 14.1 of the Master Lease or any other default under any of the Bond Documents, including but not limited to any breach in the due observance or performance of any covenant, condition or agreement contained therein.

4.2 Acceleration Upon Default, Additional Remedies. Time is of the essence hereof. In the event of any event of default hereunder, Beneficiary may declare all indebtedness secured hereby to be due and payable by written notice to the Trustor as outlined in Section 9.2 of the General Indenture and the same shall thereupon become due and payable without presentment, demand, protest or notice of any kind. Thereafter Beneficiary may exercise any or all of the following remedies, or any other remedies which Beneficiary is entitled to under any of the Bond Documents or applicable law:

(a) Either in person or by agent, with or without bringing any action or proceeding, or by a receiver appointed by a court and without regard to the adequacy of its security, enter upon and take possession of the Trust Estate, or any part thereof, in its own name or in the name of Trustee, and do any acts which it deems necessary or desirable to preserve the value, marketability or rentability of the Trust Estate, or a part thereof or interest therein, increase the income therefrom or protect the security hereof and, with or without taking possession of the Trust Estate, sue for or otherwise collect the rents, issues and profits thereof, including those past due and unpaid, and apply the same, less costs and expenses of operation and collection including attorney's fees, upon any indebtedness secured hereby, all in such order as Beneficiary may determine. The entering upon and taking possession of the Trust Estate, the collection of such rents, issues and profits and the application thereof as aforesaid, shall not cure or waive any default or notice of default hereunder or invalidate any act done in response to such default or pursuant to such notice of default and, notwithstanding the continuance in possession of the Trust Estate or the collection, receipt and application of rents, issues or profits, Trustee and/or Beneficiary shall be entitled to exercise every right provided for in any of the Bond Documents or by law upon occurrence of any event of default, including the right to exercise the power of sale;

(b) Commence an action to foreclose this Deed of Trust as a mortgage, appoint a receiver, or specifically enforce any of the covenants hereof; and/or

(c) Cause Trustor's interest in the Trust Estate to be sold by the Trustee under the power of sale set forth herein.

4.3 Foreclosure by Power of Sale. Should Beneficiary elect to foreclose by exercise of the power of sale herein contained, Beneficiary shall notify Trustee and shall deposit with Trustee this Deed of Trust and such receipts and evidence of expenditures made and secured hereby as Trustee may require; provided, however, that the Trustee shall also notify the City of the Event of Default and of the City's right, within 90 days following its receipt of such notice, to exercise its option and purchase the Project as more fully outlined in Section 9.2 of the General Indenture and Article XII of the Master Lease. If the City fails to exercise such option and purchase the Project on or prior to the expiration of such 90 day period, the Trustee shall proceed as follows:

(a) Trustee shall exercise on behalf of Beneficiary the power of sale granted herein by complying with all requirements of applicable law. Trustee shall execute and deliver to the purchaser or purchasers of the Trust Estate its good and sufficient deed or deeds conveying the property so sold, but without any covenant or warranty, express or implied. The recitals in such deed of any matters or facts shall be conclusive proof of the truthfulness thereof. Any person, including without limitation, Trustor, Trustee or Beneficiary, may purchase at such sale and Trustor hereby covenants to warrant and defend the title of such purchaser or purchasers from claims arising by, through or under Trustor.

(b) After deducting all costs, fees and expenses of Trustee and of this trust, including, but not limited to, attorney fees and costs, and costs of evidence of title in connection with the sale, Trustee shall apply the proceeds of sale to payment of: all sums expended under the terms hereof, not then repaid, with accrued interest per annum as set forth in the Indenture; all other sums then secured hereby; and the remainder, if any, to the person or persons legally entitled thereto, or the Trustee, in its discretion, may deposit the balance of such proceeds with the county clerk of the county in which the sale took place.

(c) The person conducting the sale may, for any cause such person deems expedient, postpone the sale in accordance with Utah law and, in every case, notice of such postponement shall be given by public declaration by such person at the time and place last appointed for the sale.

4.4 Foreclosure as Mortgage. Should Beneficiary elect to foreclose this Deed of Trust in the manner provided by law for the foreclosure of mortgages on real property, Beneficiary shall be entitled to recover in such proceeding all costs and expenses incident thereto, including a reasonable attorney's fee in such amount as shall be fixed by the court, including all appeals. To the extent permitted by law, Beneficiary shall be entitled to possession of the Project during any redemption period allowed under the laws of the State of Utah.

4.5 Appointment of Receiver. If any event of default described in Section 4.1 of this Deed of Trust shall have occurred and be continuing, Beneficiary, as a matter of

right and without notice to Trustor or anyone claiming under Trustor, and without regard to the then value of the Trust Estate or the interest of Trustor therein, shall have the right to apply to any court having jurisdiction to appoint a receiver or receivers of the Trust Estate, and Trustor hereby irrevocably consents to such appointment and waives notice of any application therefor. Any such receiver or receivers shall have all the usual powers and duties of receivers in like or similar cases and all powers and duties of Beneficiary in case of entry as provided in Section 4.2(a) and shall continue as such and exercise all such powers until the date of confirmation of sale of the Trust Estate unless such receivership is sooner terminated. Beneficiary's rights under this Section shall be in addition to, and not a limitation of, Beneficiary's rights under Section 2.2 and 4.2(a) of this Deed of Trust.

4.6 Remedies Not Exclusive. Trustee and Beneficiary, and each of them, shall be entitled to enforce payment and performance of any indebtedness or obligations secured hereby and to exercise all rights and powers under this Deed of Trust, under any Loan Instrument or other agreement, and under any laws now or hereafter in force, notwithstanding that some or all of the said indebtedness and obligations secured hereby may now or hereafter be otherwise secured, whether by mortgage, deed of trust, pledge, lien, assignment or otherwise. Neither the acceptance of this Deed of Trust nor its enforcement whether by court action or pursuant to the power of sale or other powers herein contained, shall prejudice or in any manner affect Trustee's or Beneficiary's right to realize upon or enforce any other security now or hereafter held by Trustee or Beneficiary, it being agreed that Trustee and Beneficiary, and each of them, shall be entitled to enforce this Deed of Trust and any other security now or hereafter held by Beneficiary or Trustee in such order and manner as they or either of them in their absolute discretion determine. No remedy herein conferred upon or reserved to Trustee or Beneficiary is intended to be exclusive of any other remedy herein or by law provided or permitted, but each shall be cumulative and shall be in addition to every other remedy given hereunder or now or hereafter existing at law or in equity or by statute. Every power or remedy given by any of the Bond Documents to Trustee or Beneficiary or to which either of them may be otherwise entitled, may be exercised, concurrently or independently, from time to time and as often as may be deemed expedient by Trustee or Beneficiary and either of them may pursue inconsistent remedies.

4.7 Request for Notice. Trustor hereby requests a copy of any Notice of Default or Notice of Sale hereunder be mailed to it at the address set forth in the first paragraph of this Deed of Trust.

ARTICLE V

MISCELLANEOUS

5.1 Governing Law; Severability of Provisions of Bond Documents; Waivers, etc. This Deed of Trust shall be governed by the laws of the State of Utah. In the event that any provision of any of the Bond Documents conflicts with applicable laws, such conflicts shall not affect other provisions of such Bond Document which can be given effect without the conflicting provision, and to this end the provisions of the Bond Document are declared to be severable. This instrument cannot be waived, changed, discharged or terminated orally, but only by an instrument in writing signed by the parties against whom enforcement of any waiver, change, discharge or termination is sought.

5.2 Limitation of Interest. It is the intent of Trustor and Beneficiary in the execution of this Deed of Trust and the Bonds and all other instruments securing the Bonds to contract in strict compliance with the laws of the State of Utah governing the loan evidenced by the Bonds. In furtherance thereof, Trustor stipulates and agrees that none of the terms and provisions contained in the Bond Documents shall ever be construed to create a contract for the use, forbearance or detention of money requiring payment of interest at a rate in excess of the maximum interest rate permitted to be charged by the laws of the State of Utah governing the loan evidenced by the Bonds. Trustor or any guarantor, endorser or other party now or hereafter becoming liable for the payment of the Bonds shall never be liable for unearned interest on the Bonds and shall never be required to pay interest on the Bonds at a rate in excess of the maximum interest that may be lawfully charged under the laws of the State of Utah and the provisions of this Section shall control over all other provisions of the Bonds and any other instrument executed in connection herewith which may be in apparent conflict herewith. In the event any holder of the Bonds shall collect monies which are deemed to constitute interest which would otherwise increase the effective interest rate on the Bonds to a rate in excess of that permitted to be charged by the laws of the State of Utah, all such sums deemed to constitute interest in excess of the legal rate shall be immediately returned to the Trustor upon such determination.

5.3 Statements by Trustor. Trustor, within ten (10) days after receiving a request from the Beneficiary, will furnish to Beneficiary a written statement stating the unpaid principal and any interest on the Bonds and any other amounts secured by this Deed of Trust and stating whether any offset or defense exists against such principal and interest.

5.4 Reconveyance by Trustee. Portions of the Property may be released by the Trustee upon compliance with the provisions of Section 11.6 of the Master Lease as defined in the Indenture. Upon written request of Beneficiary stating that all sums secured hereby have been paid, and upon surrender of this Deed of Trust to Trustee for cancellation and retention and upon payment by Trustor of Trustee's fees, Trustee shall reconvey to the person or persons legally entitled thereto, without warranty, any portion of the Trust Estate then held hereunder. The recitals in such reconveyance of any matters

or facts shall be conclusive proof of the truthfulness thereof. The grantee in any reconveyance may be described as "the person or persons legally entitled thereto."

5.5 Notices. Whenever Beneficiary, Trustor or Trustee shall desire to give or serve any notice, demand, request or other communication with respect to this Deed of Trust, each such notice, demand, request or other communication shall be in writing and shall be effective only if the same is delivered by personal service or four (4) days after being mailed by registered or certified mail, postage prepaid, return receipt requested, addressed to the address set forth at the beginning of this Deed of Trust. Any party may at any time change its address for such notices by delivering or mailing to the other parties hereto, as aforesaid, a notice of such change.

5.6 Acceptance by Trustee. Trustee shall be deemed to have accepted this Trust when this Deed of Trust, duly executed and acknowledged, is made a public record as provided by law.

5.7 Captions. The captions or headings at the beginning of each Section hereof are for convenience of the parties and are not a part of this Deed of Trust.

5.8 No Merger. If both the Trustor's and Beneficiary's estates in any portion of the Trust Estate shall at any time become vested in one owner, this Deed of Trust and the lien created hereby shall not be destroyed or terminated by application of the doctrine of merger, and in such event, Beneficiary shall continue to have and enjoy all of the rights and privileges of Beneficiary as to the separate estates. In addition, upon the foreclosure of the lien created by this Deed of Trust on the Trust Estate pursuant to the provisions hereof, any leases or subleases then existing and created by Trustor shall not be destroyed or terminated by application of the law of merger or as a matter of law or as a result of such foreclosure unless Beneficiary or any purchaser at any such foreclosure sale shall so elect. No act by or on behalf of Beneficiary or any such purchaser shall constitute a termination of any lease or sublease unless Beneficiary or such purchaser shall give written notice thereof to such tenant or subtenant.

5.9 Limited Right of Bondholders Against the Trustor. Notwithstanding anything else contained herein to the contrary, the rights of the Trustee, Beneficiary and the Bondholders to exercise remedies against the Trustor in accordance with this Deed of Trust are subject to the terms and provisions of the Indenture and the Master Lease, in particular but not limited to Article XIV of the Master Lease and Article IX of the General Indenture. Additionally, no deficiency judgment upon foreclosure may be entered against Trustor, West Valley City, Utah, the State of Utah or any of its political subdivisions.

5.10 No Waiver. Failure on the part of beneficiary to promptly enforce any right hereunder shall not operate as a waiver of such right and the waiver by Beneficiary of any default or acceptance of payment of any sum secured hereby after its due date shall not constitute a waiver of any other subsequent default.

5.11 Severability. The terms and provisions of this Deed of Trust are intended to be performed in accordance with, and only to the extent permitted by, applicable law. If any provision hereof, or the application thereof to any person or circumstance shall, for any reason and to any extent, be invalid or unenforceable, neither the remainder of this instrument nor the application of such provision to other persons or circumstances shall be affected thereby, but rather, the same shall be enforced to the greatest extent permitted by law.

IN WITNESS WHEREOF, Trustor has executed this Deed of Trust as of the day and year first above written.

MUNICIPAL BUILDING AUTHORITY
OF WEST VALLEY CITY, UTAH

(SEAL)

_____
Chair/President

ATTEST AND COUNTERSIGN:

By_____
Secretary-Treasurer

STATE OF UTAH)
: ss.
COUNTY OF SALT LAKE)

On _____, 2016 the foregoing instrument was acknowledged before me by _____ and _____, the Chair/President and Secretary-Treasurer, respectively, of the Municipal Building Authority of West Valley City, Utah.

_____
Notary Public

(SEAL)

EXHIBIT A

PROPERTY

The real property located in Salt Lake County, Utah, described as follows:

MASTER LEASE AGREEMENT

Dated as of [June 1], 2016

between

MUNICIPAL BUILDING AUTHORITY
OF WEST VALLEY CITY, UTAH,
as Lessor

A Nonprofit Corporation Organized Under the Laws of
the State of Utah

and

WEST VALLEY CITY, UTAH,
as Lessee

A Body Corporate Existing Within
the State of Utah

Various interests of the Municipal Building Authority of West Valley City, Utah, in this Master Lease Agreement have been assigned to _____, as Trustee under the General Indenture of Trust, as amended and supplemented by a First Supplemental Indenture of Trust, each dated as of the date hereof and each by and between the Municipal Building Authority of West Valley City, Utah, and _____, as Trustee, and is subject to the security interest of _____, as Trustee under said Indenture.

Table of Contents

Page

ARTICLE I DEFINITIONS 4

ARTICLE II REPRESENTATIONS, COVENANTS AND WARRANTIES.....9

Section 2.1. Representations, Covenants and Warranties of the City.....9
Section 2.2. Representations, Covenants and Warranties of the Authority 10

ARTICLE III DEMISING CLAUSE.....12

ARTICLE IV LEASE TERM.....13

Section 4.1. Commencement of Lease Term 13
Section 4.2. Termination of Lease Term 14
Section 4.3. Effect on the City of Expiration or Termination of the Term of this Master Lease 14
Section 4.4. Revised Schedule of Base Rentals and Option Price.....15

ARTICLE V ENJOYMENT OF PROJECTS.....16

ARTICLE VI PAYMENTS BY THE CITY 17

Section 6.1. Payments to Constitute Current Expenses of the City.....17
Section 6.2. Payment of Base Rentals. 17
Section 6.3. Payment of Additional Rentals with Respect to the Projects 20
Section 6.4. Manner of Payment.....21
Section 6.5. Expression of Need for the Project by the City; Determination of Purchase Price 22
Section 6.6. Nonappropriation 22
Section 6.7. Application of Base Rentals, Additional Rentals and Purchase Option Price.....23
Section 6.8. Request for Appropriation 23

ARTICLE VII ACQUISITION AND CONSTRUCTION OF PROJECTS.....25

Section 7.1. Agreement to Acquire and Construct the Projects.....25
Section 7.2. Application of Proceeds of Series 2016 Bonds.....25
Section 7.3. Disbursements From the Construction Fund 25
Section 7.4. Establishment of Completion Date; Disbursement of Balance of Construction Fund 26
Section 7.5. Investment of Construction Fund, Bond Fund, Rebate Fund and Debt Service Reserve Fund Moneys 26
Section 7.6. Design Contracts and Construction Contracts 26
Section 7.7. Defaults Under Design Contracts or Construction Contracts.....27

Section 7.8. Contractor's Performance and Payment Bonds 27
Section 7.9. Contractor's General Public Liability and Property Damage Insurance 28
Section 7.10. Contractor's Builder's Risk Completed Value Insurance.....28
Section 7.11. Contractor's Worker's Compensation Insurance.....29
Section 7.12. Proceeds of Certain Insurance Policies and Performance Bonds 29

ARTICLE VIII TITLE TO THE PROJECTS; SECURITY INTEREST 30

Section 8.1. Title to the Projects 30
Section 8.2. Security Interest 30

ARTICLE IX MAINTENANCE; TAXES; INSURANCE AND OTHER CHARGES ...31

Section 9.1. Maintenance of the Projects by the City 31
Section 9.2. Modification of the Projects.....31
Section 9.3. Taxes, Other Governmental Charges and Utility Charges.....32
Section 9.4. Provisions Respecting Insurance 33
Section 9.5. Public Liability Insurance 34
Section 9.6. Worker's Compensation Coverage 34
Section 9.7. Advances.....34
Section 9.8. Failure to Provide Insurance 34

ARTICLE X DAMAGE, DESTRUCTION AND CONDEMNATION; USE OF NET PROCEEDS 36

Section 10.1. Damage, Destruction and Condemnation 36
Section 10.2. Obligation of the City to Repair and Replace a Project.....36
Section 10.3. Covenant to Seek Appropriation of Insufficiency of Net Proceeds; Discharge of the Obligation of the City to Repair and Replace the Projects 37
Section 10.4. Cooperation of the Authority and the Trustee 37
Section 10.5. Condemnation of Property Owned by the City.....38

ARTICLE XI DISCLAIMER OF WARRANTIES; COMPLIANCE WITH LAWS AND RULES; OTHER COVENANTS 39

Section 11.1. Disclaimer or Warranties 39
Section 11.2. Further Assurances and Corrective Instruments 39
Section 11.3. City and Authority Representatives 39
Section 11.4. Requirements of Law 39
Section 11.5. Inspection of the Projects.....39
Section 11.6. Granting of Easements and Releases 40
Section 11.7. Issuance of Bonds 40
Section 11.8. Issuance of Additional Bonds 40

ARTICLE XII CONVEYANCE OF THE PROJECTS.....41

Section 12.1. Conveyance of the Projects.....41
Section 12.2. Release of a Project Upon Payment of Related Series of Bonds 41
Section 12.3. Conveyance on Purchase of Projects 42
Section 12.4. Relative Position of Option and Indenture.....42

ARTICLE XIII ASSIGNMENT, SUBLEASING, INDEMNIFICATION AND SELLING43

Section 13.1. The Authority to Grant Security Interest to Trustee 43
Section 13.2. Assignment and Subleasing by the City 43
Section 13.3. Release and Indemnification Covenants.....44
Section 13.4. References to Bonds Ineffective After Bonds Paid 44
Section 13.5. Installation of the Furnishings and Machinery of the City 44
Section 13.6. Equipment Purchased with Proceeds of the Bonds.....44

ARTICLE XIV EVENTS OF DEFAULT AND REMEDIES 46

Section 14.1. Events of Default Defined 46
Section 14.2. Remedies on Default.....47
Section 14.3. Limitations on Remedies 47
Section 14.4. No Remedy Exclusive.....47
Section 14.5. Agreement to Pay Attorneys' Fees and Expenses 47
Section 14.6. No Additional Waiver Implied by One Waiver.....48

ARTICLE XV MISCELLANEOUS.....49

Section 15.1. Lease Term.....49
Section 15.2. Notices 49
Section 15.3. Binding Effect.....49
Section 15.4. Severability 49
Section 15.5. Amounts Remaining in the Bond Fund and Debt Service Reserve Fund; Dissolution.....49
Section 15.6. Amendments, Changes and Modifications 50
Section 15.7. Execution in Counterparts.....50
Section 15.8. Net Lease 50
Section 15.9. Applicable Law.....50
Section 15.10. Captions 50
Section 15.11. No Personal Liability 50

EXHIBIT A PROJECT SITE A-1

EXHIBIT B FORM OF REQUISITION B-1

EXHIBIT C BASE RENTAL PAYMENT SCHEDULE.....C-1

MASTER LEASE AGREEMENT

THIS MASTER LEASE AGREEMENT (the "Master Lease") dated as of [June 1], 2016, entered into by and between the MUNICIPAL BUILDING AUTHORITY OF WEST VALLEY CITY, UTAH (the "Authority"), as lessor hereunder, a nonprofit corporation duly organized, existing and in good standing under the laws of the State of Utah, and also acting as grantor under a General Indenture of Trust of even date herewith (the "General Indenture"), and WEST VALLEY CITY, UTAH (the "City"), as lessee hereunder, a body corporate duly existing as such within the State under the Constitution and laws of the State of Utah:

W I T N E S S E T H:

WHEREAS, the City is a body corporate duly existing as such within the State under the Constitution and laws of the State; and

WHEREAS, the City has previously authorized and directed the creation of the Authority pursuant to the provisions of a resolution (the "Creating Resolution") by the City; and

WHEREAS, the Authority has been duly and regularly created, established and is organized and existing as a nonprofit corporation under and by virtue of the provisions of the laws of the State of Utah, including, in particular, the provisions of the Local Building Authority Act, Title 17D, Chapter 2, Utah Code Annotated 1953, as amended (the "Building Authority Act"), and the Utah Revised Nonprofit Corporation Act, Title 16, Chapter 6a, Utah Code Annotated 1953, as amended (the "Nonprofit Corporation Act"); and

WHEREAS, under the articles of incorporation of the Authority (the "Articles") and the Building Authority Act, the objects and purposes for which the Authority has been founded and incorporated are to acquire, construct, improve or extend any improvements, facilities or properties (whether real or personal) and appurtenances to them which the City is authorized or permitted by law to acquire, including, but not limited to, public buildings or other structures of every nature or any joint or partial interest in the same, which improvements, facilities, properties and appurtenances need not be situated within the boundaries of the City (the "Projects") and to finance or refinance the costs thereof on behalf of the City in accordance with the procedures and subject to the limitations of the Building Authority Act, the Local Government Bonding Act, Title 11, Chapter 14, Utah Code Annotated 1953, as amended and the Utah Refunding Bond Act, Title 11, Chapter 27, Utah Code Annotated 1953, as amended (collectively, the "Act") in order to accomplish the public purposes for which the City exists; and

WHEREAS, the Authority is possessed under the Articles and the Act of all powers set forth in the Act, the Constitution and other laws of the State of Utah, including, without limitation, the power to acquire, own, hold, lease and improve real and

personal property and to enter into agreements providing for a lease, mortgage or other conveyance of real and personal property; and

WHEREAS, the Authority desires to issue its Lease Revenue and Refunding Bonds, Series 2016, in the aggregate principal amount of $_____ (the "Series 2016 Bonds") to (a) finance the acquisition and construction of a new fire station and the remodeling of an existing fire station and, related improvements (the "Fire Station Projects") (b) refinance the Maverik Center (the "Maverik Center Project" and together with the Fire Station Projects, the "2016 Project"), by refunding the Authority's outstanding lease revenue bonds relating to the Maverik Center Project (the "Refunded Bonds"), (c) fund any required deposit to a debt service reserve fund, and (d) pay costs associated with the issuance of the Series 2016 Bonds; and

WHEREAS, the City is the owner of the fee simple title to the 2016 Project site (the "Ground Lease Site") and has agreed to lease the Ground Lease Site to the Authority pursuant to a Ground Lease Agreement dated as of [June 1], 2016 (the "Ground Lease"); and

WHEREAS, the City desires to lease, as lessee, the 2016 Project and any other Projects hereafter acquired by the Authority for lease to the City and the Authority desires to lease, as lessor, the 2016 Project and any other Projects hereafter acquired under the terms and provisions set forth in this Master Lease; and

WHEREAS, under the provisions of a resolution adopted on May 10, 2016 (the "City Resolution"), the City has authorized and approved the execution of this Master Lease, the General Indenture and a First Supplemental Indenture of Trust of even date herewith (the "First Supplemental Indenture" and collectively with the General Indenture, the "Indenture") between the Authority and _____, as trustee, and the issuance of the Series 2016 Bonds; and

WHEREAS, pursuant to the provisions of a resolution adopted on May 10, 2016 (the "Authority Resolution"), the governing board of the Authority (the "Governing Board") has authorized, approved and directed the execution of this Master Lease and the Indenture and the issuance of the Series 2016 Bonds; and

WHEREAS, pursuant to and in accordance with the provisions of the Act and the Articles, the Authority proposes to undertake the financing or refinancing of 2016 Project and the leasing of such 2016 Project to the City under the terms and provisions of this Master Lease; and

WHEREAS, the Authority may finance or refinance all or a portion of the Costs of Acquisition and Construction of other Projects through the issuance of its Bonds under the General Indenture; and

WHEREAS, all Bonds issued under the General Indenture will be secured as provided in the General Indenture including by means of the Security Documents and a pledge and assignment of this Master Lease and certain revenues and receipts derived by the Authority from the Projects, all as more fully set forth in the Indenture;

NOW, THEREFORE, for and in consideration of the mutual promises and covenants herein contained, the parties hereto agree as follows:

ARTICLE I

DEFINITIONS

All terms defined in Article I of the General Indenture, unless the context otherwise requires, shall have the same meaning in this Master Lease. In addition, unless the context otherwise requires, the terms defined in this Article I shall, for all purposes of this Master Lease and the Indenture, have the meaning herein specified.

"Act" means collectively, the Building Authority Act, the Local Government Bonding Act, the Nonprofit Corporation Act and, to the extent applicable, the Refunding Bond Act.

"Additional Rentals" means the cost of all taxes, insurance premiums and expenses payable by, and fees and expenses of, the Trustee and its counsel with respect to the Bonds and other charges and costs which the City assumes or agrees to pay exclusively from City Funds under Section 6.3 of this Master Lease, together with all interest and penalties that may accrue thereon in the event that the City shall fail to pay the same, as specifically set forth herein.

"Amendment to Master Lease" means any amendment to this Master Lease between the Authority, as lessor, and the City, as lessee, entered into pursuant to and in compliance with the provisions of Section 15.6 of this Master Lease and Article XII of the General Indenture.

"Authority" means the Municipal Building Authority of West Valley City, Utah, a nonprofit corporation organized under the laws of the State, acting in the capacity of lessor under this Master Lease and as grantor under the Indenture, and any successor to the duties and functions of the Authority.

"Base Rentals" means the payments payable by the City exclusively from City Funds pursuant to Section 6.2 hereof during the Lease Term hereof, which constitute the payments payable by the City for and in consideration of the right of use of the Projects during such Lease Term and the purchase option granted herein.

"Building Authority Act" means the Local Building Authority Act, Title 17D, Chapter 2, Utah Code Annotated 1953, as amended.

"Business Day" means a legal business day on which banking business is transacted in the cities in which the Trustee or Paying Agent has its principal corporate trust offices.

"City" means West Valley City, Utah a body corporate duly established and existing under and by virtue of the Constitution and laws of the State, and any entity succeeding to its rights and obligations under this Master Lease.

"City Funds" means all revenues and receipts derived by the City from the operation of the Projects, including, without limitation, funds of the City legally available

therefor, all to the extent the same are budgeted and appropriated by the governing body of the City for the purpose of paying Base Rentals, Additional Rentals or the Purchase Option Price hereunder during the Lease Term in which this Master Lease may be in effect.

"Completion Date" means the date of completion of acquisition and/or construction of a Project, within the meaning of Section 17D-2-401(2) of the Building Authority Act, and of final acceptance by the City of such Project.

"Construction Contract" means any contract or agreement relating to the acquisition, development or construction of a Project or portion thereof.

"Contractor" means that party to a Construction Contract or Design Contract providing services related to a Project or portion thereof.

"Costs of Acquisition and Construction" means:

(1) obligations of the City or the Authority incurred for labor, materials and equipment in connection with a Project or the cost of acquiring a Project;

(2) the cost of payment, performance or other bonds and any and all types of insurance (including but not limited to title insurance) that may be necessary or appropriate to have in effect during the course of a Project;

(3) all costs of planning and designing a Project, including architectural, planning, engineering, legal and fiscal advisors' fees and the costs incurred by the City or the Authority for test borings, surveys, estimates, plans and specifications and preliminary investigations therefor, and for supervising construction, as well as for the performance of all other duties required by or consequent to the proper and timely completion of such Project;

(4) payment of expenses incurred in seeking to enforce any remedy against any contractor or subcontractor in respect of any default under a contract relating to the acquisition and construction of a Project;

(5) the cost of equipment and furnishings for a Project, the cost of acquiring a site for a Project (or any interest therein) and all other costs authorized by the Building Authority Act which are considered to be a part of the costs of a Project in accordance with generally accepted accounting principles, including but not limited to interest accruing on the Bonds during the period required to complete the acquisition and construction of such Project and for not more than twelve (12) months after the Completion Date;

(6) any sums required to reimburse the Authority or the City for advances by either of them for any of the above items or for any other costs incurred and for work done by either of them which are properly chargeable to a capital account in respect of a Project;

(7) such amounts as the governing body of the Authority shall find to be necessary to provide necessary working capital in connection with a Project; and

(8) all expenses connected with the authorization, sale and issuance of a series of Bonds and the refunding of any Bonds, including the initial fees of the Trustee, escrow agent, rating agency fees, bond insurance premiums, fees for outside attorneys or accountants, whose opinions are required to obtain the issuance of the Bonds, financial advisors' fees and commissions and printing costs, those amounts as the Authority shall find necessary to establish reserves and maintenance, repair, replacement, and contingency funds and accounts, and the interest on Bonds for a reasonable time prior to, during, and for a reasonable period of time after completion of a Project.

"Design Contract" means any contract or agreement relating to the architecture, design, engineering or planning of a Project or portion thereof.

"Event of Default" means one or more events of default as defined in Section 14.1 herein.

"Event of Nonappropriation" means a failure by the City to renew this Master Lease by failing or refusing to budget and appropriate sufficient City Funds for the payment of all or any part of the Base Rentals and Additional Rentals for any Renewal Term hereof as set forth in Section 4.1 and Section 6.6 hereof. The existence or nonexistence of an Event of Nonappropriation shall be determined as of the date on which the governing body of the City fails or refuses to adopt a final budget in accordance with applicable law which appropriates sufficient moneys to pay such Base Rentals and reasonably estimated Additional Rentals for the next succeeding Renewal Term as contemplated by Section 4.1 hereof or on any earlier or later date on which the Trustee receives written notice from the City that the governing body of the City has failed or refused to make such appropriations and the term of this Master Lease will not be renewed; provided, however, that the Trustee may waive any Event of Nonappropriation which is cured by the City within a reasonable time if, in the Trustee's judgment, such waiver is in the best interests of the Bondholders, except as otherwise provided in Section 4.1 hereof. Notwithstanding anything herein to the contrary, the City's failure or refusal to adopt a final budget in accordance with applicable law within the time provided by Section 4.1 hereof which appropriates sufficient moneys to pay such Base Rentals and reasonably estimated Additional Rentals for the next succeeding Renewal Term shall constitute an Event of Nonappropriation.

"Fiscal Year" means the twelve-month period used from time to time by the City for its financial accounting purposes (currently July 1 to June 30).

"Force Majeure" means, without limitation, the following: acts of God; strikes, lockouts or other industrial disturbances; acts of public enemies; orders or restraints of any kind of the government of the United States of America or of the State or any of their departments, agencies or officials, or any civil or military authority; insurrections; riots;

landslides; earthquakes; storms; droughts; floods; explosions; breakage or accidents to machinery, transmission pipes or canals; or any other cause or event not reasonably within the control of the City and not due to its negligence.

"Ground Lease" means the Ground Lease Agreement dated as of [June 1], 2016, by and between the City and the Authority.

"Ground Lease Term" means the duration of the leasehold estate created in the Project Site as provided in Article IV of the Ground Lease.

"Independent Counsel" means an attorney duly admitted to the practice of law before the highest court of the State and who is not a full-time employee of the Authority, the City or the Trustee.

"Lease Term" means the duration of the leasehold estate created in the Projects as provided in Article IV of this Master Lease.

"Net Proceeds," when used with respect to (i) proceeds from policies of insurance required hereby (including any self-insurance), (ii) any condemnation award, (iii) proceeds resulting from a default under a contract relating to the acquisition and construction of a Project (including liquidated damages, if any), or (iv) the proceeds of any liquidation of all or portions of a Project, means the amount remaining after deducting all expenses (including, without limitation, attorneys' fees and costs) incurred in the collection of such proceeds or award from the gross proceeds thereof.

"Nonprofit Corporation Act" means the Utah Revised Nonprofit Corporation Act, Title 16, Chapter 6a, Utah Code Annotated 1953, as amended.

"Original Term" means the initial portion of the Lease Term which terminates on [June 30, 2017].

"Permitted Encumbrances" means, as of any particular time, (i) liens for taxes and assessments not then delinquent, or which the City may, pursuant to the provisions of Article IX of this Master Lease, permit to remain unpaid; (ii) this Master Lease, including any security interests granted herein or therein; (iii) utility access and other easements and rights of way, restrictions and exceptions which the City Representative and the Authority Representative certify in writing to the Trustee will not interfere with the operation of the Projects or impair the marketability of title to the Projects or the general security provided for the Bondholders of the Bonds; (iv) the Indenture, the Security Documents and related financing statements; (v) the ownership interests of the City in any real or personal property which is the subject of any lease between the City, as lessor and the Authority, as lessee that is entered into in furtherance of any Project; (vi) any mechanic's, laborer's, materialmen's, supplier's or vendor's lien or right in respect thereof if payment is not yet due under the contract in question; and (vii) such minor defects, irregularities, encumbrances and clouds on title as normally exist with respect to property of the general character of the Projects and as do not materially impair the operation or marketability of title to the Projects and (viii) any items contained in a Title

Insurance Policy delivered in accordance with Sections 2.4, 2.13 or 2.14 of the General Indenture.

"Project Site" means the real property, as more fully described in Exhibit A hereof, where the 2016 Project is to be or has been constructed.

"Project or Projects" has the meaning ascribed to that term in the Indenture and includes the 2016 Project.

"Purchase Option Price" means an amount payable, at the option of the City, at any time for the purpose of terminating the payment obligation of the City under this Master Lease with respect to a Project and purchasing the Authority's interest in such Project, which amount, when added to the amounts then on deposit in the Bond Fund and the subaccount within the Debt Service Reserve Fund with respect to such Project (other than moneys held by the Trustee for the payment of the Bonds under the Indenture not deemed Outstanding), shall be sufficient (i) to pay, defease, retire and/or redeem all the Outstanding Bonds of the Series of Bonds issued to finance or refinance the particular Project in accordance with the provisions of the Indenture (including, without limiting the generality of the foregoing, the principal of and interest to maturity or earliest applicable redemption date of the relevant Bonds and premium, if any, thereon, the expenses of defeasance and/or redemption, including escrow agent fees, if any, and fee and expenses of the City, the Authority and the Trustee), (ii) in case of redemption, to make arrangements satisfactory to the Trustee for the giving of the required notice of redemption; (iii) to make any payment of rebate with respect to any Tax-Exempt Bonds to be paid, defeased, retired and/or redeemed.

"Refunding Bond Act" means Title 11, Chapter 27, Utah Code Annotated 1953, as amended.

"Renewal Terms" means the optional Renewal Terms of the Lease Term as provided in Article IV of this Master Lease.

"Rentals" means all Base Rentals and Additional Rentals payable during the Lease Term under this Master Lease.

"Series 2016 Bonds" means the Authority's Lease Revenue and Refunding Bonds, Series 2016, issued in an aggregate principal amount of $_____ herein authorized.

"2016 Project" means, the acquisition and construction of a new fire station and the remodeling of an existing fire station and, related improvements and the refinancing of the Maverik Center and the Authority's interest in the Project Site for lease to the City.

ARTICLE II

REPRESENTATIONS, COVENANTS AND WARRANTIES

Section 2.1. Representations, Covenants and Warranties of the City. The City represents, covenants and warrants for the benefit of the Authority and the Trustee as follows:

(a) The City is a body corporate duly existing as such within the State under the Constitution and laws of the State. Under the provisions of the Constitution and laws of the State, the City is authorized to enter into the transactions contemplated by this Master Lease and to carry out its obligations hereunder. The City has duly authorized and approved the execution and delivery of this Master Lease. The City agrees that it will do or cause to be done all things necessary to preserve and keep in full force and effect its existence.

(b) The Authority has by this Master Lease leased the Project and may pursuant to this Master Lease lease other Projects to the City as hereinafter provided. It is understood by the parties hereto that the Authority has all rights, title and interest in the Project, subject to Permitted Encumbrances.

(c) During the Lease Term, the Project will at all times be used for purposes which are within and consistent with the legal rights, powers and authority of the Authority and the City under the Constitution and laws of the State.

(d) The City is not in default under any of the provisions of the laws of the State which default would affect its existence or its powers referred to in this Section 2.1(a) hereof. Neither the execution and delivery of this Master Lease nor the issuance and sale by the Authority of its Bonds, nor the performance by the City of its obligations under this Master Lease will constitute on the part of the City a breach of or a default under, any existing law, court or administrative regulation, decree, order or any material agreement, indenture, mortgage, lease or any other instrument to which the City is subject or by which it is or may be bound.

(e) There is no action, suit or proceeding pending or, to the best knowledge of the City, threatened, or any basis therefor, before any court or administrative agency which may adversely affect the City or ability of the City to perform its obligations under this Master Lease. All authorizations, consents and approvals of governmental bodies or agencies required in connection with the execution and delivery by the City of this Master Lease or in connection with the carrying out by the City of its obligations under this Master Lease have been obtained.

(f) The Project constitutes a "project" within the meaning of the Building Authority Act.

(g) The acquisition and construction of the Project will be accomplished in accordance with all applicable laws and the construction and financing of the Project is necessary and appropriate for accomplishing one or more of the authorized functions or public purposes of the City and is suitable for such purpose and in furtherance of the purposes of the City and the best interests of the citizens of the City.

(h) No voter approval was sought on the question of whether general obligation bonds of the City should be issued to finance the Project.

Section 2.2. Representations, Covenants and Warranties of the Authority. The Authority represents, covenants and warrants for the benefit of the City and the Trustee as follows:

(a) The Authority is a nonprofit corporation duly incorporated and in good standing under the laws of the State and is duly qualified to transact business in the State, is not in violation of any provision of its Articles of Incorporation or its Bylaws, has the corporate power and authority to enter into this Master Lease and has duly authorized and approved the execution and delivery of this Master Lease by proper corporate action.

(b) The Authority agrees that, so long as this Master Lease has not been terminated, it will maintain its corporate existence, will continue to be a corporation in good standing under the laws of the State, will not dissolve or otherwise dispose of all or substantially all of its assets, except as provided in this Master Lease (or similar leases), and will not consolidate with or merge into another corporation or permit one or more other corporations to consolidate with or merge into it.

(c) The Authority will cause the Project to be acquired and constructed (subject to Permitted Encumbrances) and will complete or cause to be completed the acquisition and construction of the Project in accordance with the plans and specifications therefore. The Authority will lease the Project to the City as hereinafter provided. It is understood by the parties hereto that the Authority shall have all rights, title and interest in the Project, subject to Permitted Encumbrances.

(d) The Authority will not pledge the Base Rentals, the Additional Rentals, Purchase Option Price or any of its other rights under this Master Lease and will not assign its interest in or encumber the Project except as provided hereunder or under the Indenture and the Security Documents. All property and moneys received by the Authority from the City will, so long as no Event of Nonappropriation or no Event of Default shall occur, be applied for the benefit of the City, and all property and moneys received by the Authority under this Master Lease with respect to the Project and under the Indenture for the Bondholders of the Bonds will be applied for the proportionate benefit of said Bondholders.

(e) Neither the execution and delivery hereof, nor the fulfillment of or compliance with the terms and conditions hereof, nor the consummation of the transactions contemplated hereby conflicts with or results in a breach of the terms, conditions or provisions of any restriction or any agreement or instrument to which the Authority is now a party or by which the Authority is bound, or constitutes a default under any of the foregoing or results in the creation or imposition of any lien, charge or encumbrance whatsoever upon any of the property or assets of the Authority except Permitted Encumbrances.

(f) Except as otherwise provided in this Master Lease, the Indenture and the Security Documents, the Authority will not assign this Master Lease, its rights to payments from the City or its duties and obligations under this Master Lease to any other person, firm or corporation so as to impair or violate the representations, covenants and warranties contained in this Section 2.2.

(g) The Authority will not use any of the proceeds of the sale of the Series 2016 Bonds in a manner not authorized by the terms of this Master Lease, the Indenture or the exhibits hereto and thereto.

(h) There is no action, suit or proceeding pending or, to the best knowledge of the Authority, threatened, or any basis therefor, before any court or administrative agency which might adversely affect the Authority or the ability of the Authority to perform its obligations under this Master Lease, the Indenture and the Security Documents. All authorizations, consents and approvals of governmental bodies or agencies required in connection with the execution and delivery by the Authority of this Master Lease, the Indenture, the Security Documents or in connection with the carrying out by the Authority of its obligations under this Master Lease, the Indenture and the Security Documents have been obtained.

(i) The Authority gave notice of its intent to issue the Series 2016 Bonds and no petition meeting the requirements of Section 17D-2-602 or 17D-2-502 of the Building Authority Act was submitted during the 30-day period following publication of such notice. The Authority gave notice of a public hearing and held such public hearing with respect to the issuance of the Series 2016 Bonds all in accordance with the provisions of Section 11-14-318 of the Act.

ARTICLE III

DEMISING CLAUSE

The Authority hereby demises and leases the 2016 Project, and the City leases the same from the Authority, subject only to Permitted Encumbrances in accordance with the provisions of this Master Lease, to have and to hold under this Master Lease unless sooner terminated as expressly provided herein. Nothing in this Master Lease shall be construed to require the City to operate the 2016 Project other than as the lessee hereunder or to exercise its right to purchase any or all of the 2016 Project or any portion thereof as provided in Article XII of this Master Lease.

The Trustee shall be empowered, after an Event of Nonappropriation or an Event of Default and the foreclosure of the security afforded under this Master Lease, the Indenture or the Security Documents, to collect the amount of the Base Rentals and Additional Rentals allocable to any sublease from any and all sublessees, and apply the net amount collected to the Base Rentals and Additional Rentals required herein, but no such collection shall be deemed a waiver of any agreement, term, covenant or condition hereof, or the acceptance of any sublessee as lessee hereunder.

The Authority warrants and covenants that it will acquire the Project for the exclusive use of the City, subject to Permitted Encumbrances. The Authority will cause to be furnished to the Trustee a commitment for title insurance policy which meets the requirements of Section 2.4 of the General Indenture.

ARTICLE IV

LEASE TERM

Section 4.1. Commencement of Lease Term. The Lease Term shall commence as of the date of delivery of the Series 2016 Bonds and shall terminate at midnight on [June 30, 2017]. The Lease Term may be continued, solely at the option of the City, beyond the expiration of the Original Term for an additional one year, (the first "Renewal Term") and for additional Renewal Terms thereafter each of one year in duration (except that the final Renewal Term shall commence _____ and end on _____), upon the City having adopted a final budget in accordance with applicable law prior to the end of the then-current Original Term or Renewal Term, as the case may be, that appropriates specifically with respect to this Master Lease sufficient City Funds for the payment of Base Rentals and reasonably estimated Additional Rentals to become due during the next following Renewal Term, it being understood that by budgeting and appropriating such amounts, the City shall have elected to continue the Lease Term for the next following Renewal Term and shall have given adequate notice thereof as contemplated by Section 17D-2-402(1)(b) of the Building Authority Act. The terms and conditions during any Renewal Term shall be the same as the terms and conditions during the Original Term, except that the Base Rentals shall be as otherwise specified in Exhibit C attached hereto, for each such Renewal Term, as such Schedule may be revised as provided in Section 6.2 hereof.

Within five (5) days after the adoption of such final budget, the City shall deliver written notice to the Trustee stating that the City has extended the term of this Master Lease for the succeeding Renewal Term, describing in reasonable detail the actions taken by the governing body of the City (if such actions are then required to pay any Rentals hereunder or, if no such actions are then required, explaining the reasons therefor) to appropriate funds sufficient for the purpose of paying the Base Rentals and reasonably estimated Additional Rentals (as provided in Sections 6.2 and 6.3 hereof) to become due during such succeeding Renewal Term. Unless the Trustee shall have previously received the foregoing notice applicable to the next succeeding Renewal Term, the Trustee shall, at least 20 days prior to the last day of each Fiscal Year, make written inquiry of the City as to whether the City has extended the term of this Master Lease and whether the governing body of the City shall have made the appropriation necessary to pay the Base Rentals and reasonably estimated Additional Rentals to become due during such succeeding Renewal Term. The City shall deliver written notice to the Trustee as soon as practicable, but in no event later than the expiration of the Original Term or the then current Renewal Term, stating (as the case may be) that: (i) the governing body of the City has failed or refused to appropriate, specifically with respect to this Master Lease, moneys sufficient to pay such Base Rentals and reasonably estimated Additional Rentals for the next succeeding Renewal Term and stating what actions the City and its officials propose to take with respect to this Master Lease, the Projects and any budgetary procedures for any Base Rentals and Additional Rentals that may thereafter accrue; or (ii) that the City is precluded from adopting its final budget for the fiscal year in question due to the procedural requirements of State law described below.

In the event the governing body of the City is precluded, solely as a result of notice, hearing or other procedural requirements imposed by State law in connection with the adoption of a final budget, from adopting a final budget on or prior to the last day of any Fiscal Year, no Event of Nonappropriation shall be deemed to have occurred as a result of the failure to so adopt a final budget, provided that: (i) prior to the last day of such Fiscal Year, the governing body of the City shall have adopted a tentative budget which includes a tentative appropriation of City Funds sufficient to pay the Base Rentals and reasonably estimated Additional Rentals to become due during the succeeding Renewal Term; (ii) prior to the last day of such Fiscal Year, the City shall have delivered to the Trustee a copy of the tentative budget adopted by its governing body and a notice stating that it is the intention of the governing body to renew the Lease Term upon the adoption of the final budget; (iii) any Base Rentals or Additional Rentals described in the preceding paragraph, and provided further that any Rentals which become due and payable pursuant to the terms of this Master Lease prior to the adoption of such final budget shall be paid by the City in accordance with the tentative budget adopted by the governing body of the City; and (iv) the governing body of the City shall adopt a final budget on or before the last date allowable under applicable law that includes the appropriation of City Funds required under this Section 4.1 to renew the Lease Term. The City shall promptly file a copy of the final budget so adopted by its governing body with the Trustee.

Section 4.2. Termination of Lease Term. The Lease Term shall terminate upon the first to occur of the following events:

(a) the exercise by the City of its option to purchase the Authority's interest in all of the Projects, granted under the provisions of this Master Lease;

(b) an Event of Default and the election of the Authority or the Trustee to terminate this Master Lease under Article XIV hereof;

(c) the discharge of the lien of the Indenture under Article VIII thereof;

(d) the expiration or termination of the Lease Term pursuant to an Event of Nonappropriation or Section 10.3 of this Master Lease under the conditions provided therein; or

(e) the last day of the Lease Term of this Master Lease, upon payment of all Base Rentals and Additional Rentals required hereunder.

Section 4.3. Effect on the City of Expiration or Termination of the Term of this Master Lease. The expiration or termination of the term of this Master Lease as to the City's right of possession and use of the Projects pursuant to Section 4.2(b) or (d) hereof shall terminate all obligations of the City under this Master Lease (except to the extent of legally available City Funds from the Project) and shall terminate the City's rights of use, occupancy and operation of the Projects; provided, however, that all other terms of this Master Lease and the Indenture, including all obligations of the Trustee with respect to

the Bondholders and the receipt and disbursement of funds, shall be continuing until the lien of the Indenture is discharged or foreclosed, as provided in the Indenture, except that all obligations of the City to pay any amounts to the Bondholders and the Trustee hereunder shall thereafter be satisfied only as provided in the Indenture. The termination or expiration of the term of this Master Lease as to the City's right of possession and use pursuant to Section 4.2(b) or (d) hereof, in and of itself, shall not discharge the lien of the Indenture.

Section 4.4. Revised Schedule of Base Rentals and Option Price. Upon partial redemption of any Series of Bonds pursuant to the Indenture, or the issuance of Additional Bonds or Refunding Bonds pursuant to the Indenture, the Authority shall provide the City and the Trustee with a revised schedule of Base Rentals which schedule shall take into account such redemption or issuance and shall be and become for all purposes thereafter Exhibit C to this Master Lease setting forth the Base Rentals.

ARTICLE V

ENJOYMENT OF PROJECTS

The Authority hereby covenants to provide the City during the Lease Term with quiet use and enjoyment of the Projects, and the City shall, by keeping and performing the agreements and covenants on its part contained in this Master Lease, during the Lease Term peaceably and quietly have and hold and enjoy the Projects, without suit, trouble or hindrance from the Authority, the Trustee or the Bondholders, except as expressly set forth herein and in the Indenture and the Security Documents. Neither the Authority, the Trustee nor any Bondholder shall interfere with such quiet use and enjoyment during the Lease Term so long as no Event of Default or Event of Nonappropriation shall have occurred. The Authority shall, at the request of the City and at the cost of the City, join in any legal action in which the City asserts its right to such possession and enjoyment, to the extent that the Authority may lawfully do so. In addition, the City may at its own expense join in any legal action affecting its possession and enjoyment of the Projects and shall be joined as a party in any action affecting its liabilities hereunder.

The Authority and the Trustee and their respective designated representatives shall have the right at all reasonable times during business hours (and in emergencies at all times) to enter into and upon the Projects for the purpose of inspecting the same, for any purpose related to the Authority's obligations or rights under this Master Lease or for any other lawful purpose.

ARTICLE VI

PAYMENTS BY THE CITY

Section 6.1. Payments to Constitute Current Expenses of the City. The City and the Authority acknowledge and agree that the obligation of the City to pay Base Rentals and Additional Rentals under this Master Lease constitutes current expenses of the City payable exclusively from City Funds and shall not in any way be construed to be an obligation or indebtedness of the City within the meaning of Sections 3 or 4 of Article XIV of the Utah Constitution, or any other constitutional or statutory limitation or requirement applicable to the City concerning the creation of indebtedness. No provision of this Master Lease shall be construed or interpreted (i) to require the governing body of the City to appropriate any money to pay the Base Rentals, the Additional Rentals or the Purchase Option Price, or (ii) as a lending of the credit of the City within the meaning of Section 29 of Article VI of the Utah Constitution. Neither the City, nor the Authority on its behalf, has pledged the credit of the City to the payment of the Base Rentals, the Additional Rentals, the Purchase Option Price, the Bonds or the interest thereon, and neither this Master Lease, the Indenture nor the Bonds shall directly or contingently obligate the City to apply money, or to levy or pledge any form of taxation, to the payment of the Base Rentals, the Additional Rentals, the Purchase Option Price or the Bonds or any interest thereon except as expressly provided herein. If the City fails to pay any Base Rentals or Additional Rentals due under this Master Lease it shall immediately quit and vacate the Projects and its obligation to pay Base Rentals or Additional Rentals hereunder shall terminate.

Section 6.2. Payment of Base Rentals.

(a) The City shall pay Base Rentals exclusively from City Funds. The City shall pay Base Rentals during the Lease Term in such amounts as shall be sufficient to pay principal and interest when due on the Bonds. The Base Rentals shall be payable directly to the Trustee in periodic payments at the times and manner and in the amounts as specified in the schedule of Base Rental payments attached as Exhibit C hereto as shall equal the interest payments falling due on the Bonds on the next succeeding Interest Payment Date and the principal payments falling due on the Bonds either by regularly scheduled maturities or by mandatory sinking fund installment or redemption, on the next succeeding principal payment date, such that there shall be on deposit with the Trustee at least fifteen days prior to each principal and/or interest payment date on the Bonds an amount sufficient to make such payment. At the time of execution of this Master Lease Base Rental payments for each payment date will equal the amounts set forth in Exhibit C hereto. The City understands that the Base Rental Payment Schedule attached as Exhibit C may be revised from time to time based on the redemption of Bonds (other than mandatory sinking fund redemptions), the issuance of any Additional Bonds or Refunding Bonds allowed under the Indenture. The City hereby agrees to pay the Base Rentals in accordance with the Base Rental Payment Schedule attached hereto as Exhibit C hereto as it may be revised from time to time by such amounts as are necessary to reflect the redemption of the principal of certain

Bonds or to pay the principal of the Additional Bonds or Refunding Bonds and interest on such Additional Bonds or Refunding Bonds.

In addition, in the event the market value of the amount on deposit in the Debt Service Reserve Fund is, for any reason, reduced below the Debt Service Reserve Requirement, the City shall, in the event it elects to renew this Master Lease during the following Renewal Term, and as a condition of renewal (but solely from City Funds), pay to the Trustee in two substantially equal semiannual payments additional Base Rentals during the Lease Term, in an amount sufficient to replenish the Debt Service Reserve Fund to the Debt Service Reserve Requirement. Notwithstanding anything contained herein to the contrary, no payment of Base Rentals or Additional Rentals shall be required to be paid prior to the Completion Date of any one Project with respect to which such Rentals are being paid.

(b) In the event that (1)(A) a portion of a Project (the "Completed Portion of the Project") financed with a separate Series of Bonds is accepted by the City for use and occupancy under this Master Lease, and (B) the acquisition and construction of additional portions of the Project (the "Uncompleted Portion of the Project") financed with one or more Series of Bonds (other than the Series of Bonds described in (A) above) have yet to be completed, and (2) an Event of Default (as defined in the Indenture) occurs under the Indenture due to the failure to complete the Uncompleted Portion of the Project, the City and the Authority hereby agree, as follows:

(i) The City consents to the provisions of Section 9.15 of the General Indenture governing such an Event of Default; and

(ii) The City shall, subject to the occurrence of an Event of Nonappropriation continue to pay Base Rentals and Additional Rentals with respect to the Completed Portion of the Project, and this Master Lease shall remain in full force and effect with respect to the Completed Portion of the Project.

(c) In the event that less than all of any one Project is initially made available for use, occupancy and operation and the City accepts a portion of any one Project for its use, occupancy and operation pending final completion of the remainder of any one such Project, any Base Rentals paid by the City with respect to any one such Project shall be prorated in a manner so as to reflect the fair rental value of that portion of the Project then available for use, occupancy or operation by the City and so used, occupied or operated.

(d) The amount of the Base Rentals otherwise payable by the City hereunder shall be reduced by an amount equal to (i) any earnings on the investment of the Bond Fund, (ii) any moneys transferred to the Bond Fund from the Debt Service Reserve Fund pursuant to paragraph (b) of Section 5.10 of the General Indenture and (iii) any Direct Payments on deposit with the Trustee in the

Bond Fund. In the event that Direct Payments are deposited with the Trustee after the City has made the related payment of Base Rentals, the City may elect to have the Trustee return to the City an amount equal to such Direct Payments (so long as the amount remaining on deposit in the Bond Fund continues to be sufficient to pay principal and interest next due on the Bonds, if such payment is requested prior to the related Interest Payment Date) or to have the Trustee retain the Direct Payments in the Bond Fund and take the credit with respect to the next required Base Rentals payment. Each payment of Base Rentals shall be in consideration for the use of the Projects by the City during the applicable period commencing on the Bond Payment Date next preceding the Bond Payment Date to which such Base Rental payment is attributable and for the option to purchase the Projects granted herein.

(e) The payments of Base Rentals and Additional Rentals under this Master Lease for each Renewal Term during the term of this Master Lease shall constitute the total Rentals which are payable for said Renewal Term and shall be paid by the City for and in consideration of the right of use, occupancy and operation of the Projects and the continued quiet use and enjoyment of the Projects for and during said Renewal Term. The parties hereto agree that such total Rentals will represent the fair rental value of the Projects. In making such determination, the parties will give consideration to the costs of financing the Costs of Acquisition and Construction of the Projects, the uses and purposes of the Projects and the benefits therefrom which will accrue to the parties to this Master Lease and the general public by reason of the Projects.

(f) Notwithstanding the foregoing, the City may not elect to renew this Master Lease in part and in the event it desires to renew this Master Lease must continue to pay City Funds in an amount sufficient to pay Base Rentals attributable to all of the Projects which have been delivered for occupancy or use (or any portion thereof, in proportion to such available portion).

(g) It is understood and agreed by the City that, subject to the terms of this Master Lease and the Indenture, all Base Rentals payable under this Section 6.2 by the City, as well as the Purchase Option Price, if paid with respect to any or all of the Projects, are assigned by the Authority to the Trustee for the benefit of the Bondholders as set forth in the Indenture. The City assents to such assignment. The Authority hereby directs the City, and the City hereby agrees to pay to the Trustee at its principal office in Salt Lake City, Utah or such other office as designated by the Trustee, all Base Rentals payable by the City pursuant to this Section 6.2 and, if paid, the Purchase Option Price.

(h) The amount of the Base Rentals and Purchase Option Price otherwise payable shall be reduced as appropriate to reflect any redemption of Bonds and/or the purchase of Bonds and the cancellation thereof in advance of their maturity. If at any time the amounts held by the Trustee in the Bond Fund and the Debt Service Reserve Fund (other than moneys held for the payment of Bonds not deemed Outstanding) shall be sufficient to pay at the times required the

principal of and interest and premium, if any, on all of the Bonds then Outstanding, the City shall not be obligated to pay any further Base Rentals hereunder.

(i) As provided in Section 17D-2-401(2)(b)(i) of the Local Building Authority Act, the City is not required to make any payment of Base Rentals or Additional Rentals hereunder until construction of the related Projects are complete. In the event that a Project is not completed by the time that amounts set aside for payment of capitalized interest are expended, the City and the Authority shall (i) reallocate proceeds of the related Series of Bonds to make funds available for additional capitalized interest, (ii) seek other legally available funds for such purpose or (iii) issue Additional Bonds to finance additional capitalized interest; provided, however, the City may commence making payments of Base Rentals with respect to individual projects constituting a Project.

Section 6.3. Payment of Additional Rentals with Respect to the Projects. In addition to the Base Rentals and as part of the total consideration for the use of the Projects and the option to purchase any or all of the Projects, and commencing upon the execution and delivery of this Master Lease and continuing throughout the period that the City pays Base Rentals, the City shall pay or shall cause to be paid the following Additional Rentals, exclusively from City Funds, during the Lease Term thereof as hereinafter provided:

(a) the annual fee of the Trustee for the ordinary services of the Trustee rendered and their ordinary expenses incurred under the Indenture;

(b) the reasonable fees and expenses of the Trustee and any paying agent appointed under the Indenture with respect to the Bonds for acting as paying agent as provided in the Indenture;

(c) the reasonable fees and expenses of the Trustee for extraordinary services rendered by it and extraordinary expenses, including the fees and expenses of its counsel, incurred as Trustee under the Indenture;

(d) the reasonable out-of-pocket expenses of the Authority relating to the Projects not otherwise required to be paid by the City under the terms of this Master Lease;

(e) the costs of maintenance and repair of the Projects as required under Section 9.1 hereof;

(f) the costs of taxes, governmental charges, utility charges, management and operations expenses, liens and encumbrances with respect to the Projects as required under Section 9.3 hereof;

(g) the costs of casualty, public liability and property damage and worker's compensation insurance with respect to the Projects as required under Sections 9.4, 9.5 and 9.6 hereof;

(h) the amount of any tax or excise on the Base Rentals, Additional Rentals, Purchase Option Price or any other tax, however described, levied, assessed or imposed by the United States Government, the State or any political subdivision or any taxing authority thereof against the Authority;

(i) an amount equal to any franchise, succession, capital levy or transfer tax or any income, excess profits or revenue tax, or any other tax, assessment, charge or levy upon the Base Rentals, Additional Rentals or the Purchase Option Price payable by the City pursuant to this Master Lease;

(j) any amounts required to be deposited to the Rebate Fund established with respect to a Series of Bonds; and

(k) during the Original Term or any Renewal Term in which there is an insufficiency of Net Proceeds as described in Section 10.2 hereof, an amount equal to the insufficiency of Net Proceeds required to repair, replace, restore or modify the affected Projects.

The Additional Rentals specified in subsections (a), (b), (c) and (k) shall be payable to the Trustee and shall be due and payable within ten days after notice in writing from said Trustee to the City stating the amount of Additional Rentals then due and payable and the purpose thereof. Except as otherwise provided herein or in the Indenture, the Additional Rentals specified in subsections (d), (e), (f), (g), (h), and (i), shall be payable to the Authority or directly to the person or entity with respect to which such costs or fees were incurred and shall be due and payable at such time as the Authority or such person or entity shall require. Additional Rentals specified in subsection (j) shall be determined by, or at the direction of, the City and deposited with the Trustee as required by Section 148 of the Code.

Section 6.4. Manner of Payment. The Base Rentals, Additional Rentals and, if paid, the Purchase Option Price, shall be paid exclusively from City Funds and in lawful money of the United States of America. The obligation of the City to make payment of the Base Rentals and Additional Rentals required under this Article VI and other sections hereof and to perform and observe the other covenants and agreements contained herein shall be absolute and unconditional in all events except as expressly provided hereunder. Notwithstanding any dispute between the City and the Authority, the Trustee, any Bondholder, any contractor or subcontractor retained with respect to the construction and equipping of a Project, any supplier of labor or materials in connection therewith or any other person, the City shall pay all payments of Base Rentals and Additional Rentals, from and to the extent of available City Funds, when due, and shall not withhold any Base Rentals or Additional Rentals pending final resolution of such dispute, nor shall the City assert any right of set-off or counterclaim against its obligation to make such payments required hereunder. The obligation of the City to pay Base Rentals and

Additional Rentals during the Original Term or any Renewal Term shall be absolute and unconditional in all events, except as expressly provided herein, and payment of the Base Rentals and Additional Rentals shall not be abated through accident or unforeseen circumstances.

Section 6.5. Expression of Need for the Project by the City; Determination of Purchase Price.

(a) The City hereby finds as of the date of this Master Lease, that it has an essential need for the Project to carry out and give effect to the public purposes of the City. The City and the Authority hereby agree and determine that the Base Rentals and items of Additional Rentals with respect to the Project are reasonable and that the Purchase Option Price with respect to the Project represents, as of the end of the Lease Term, a reasonable purchase price for the Project. In making such determination the City and the Authority have given consideration to the costs of the Project, the cost of financing the Project, the uses and purposes for which the Project will be employed by the City and the benefit to the citizens of the City by reason of the City's use and occupancy of the Project pursuant to the provisions of this Master Lease.

(b) The City must find that, as of the date of the execution of an Amendment to this Master Lease relating to a Project, the City then has an essential need for such Project which is the subject of the Amendment to Master Lease to carry out and give effect to the public purposes of the City. At the time of execution of such Amendment to Master Lease, the City and the Authority must agree and determine that the Base Rentals and Additional Rentals payable with respect to such Project that is the subject of such Amendment to Master Lease are reasonable and that the Purchase Option Price represents, as of the end of the Lease Term, a reasonable purchase price for such Project. In making such determination the City and the Authority will give consideration to the costs of such Project, the cost of financing such Project, the uses and purposes for which such Project will be employed by the City and the benefit to the citizens of the City by reason of the City's use and occupancy of such Project pursuant to the provisions of this Master Lease.

Section 6.6. Nonappropriation. In the event that sufficient City Funds shall not be budgeted and appropriated by the City, in a final budget adopted within the time permitted by Section 4.1 hereof, for the payment of the (i) Base Rentals becoming due during such Renewal Term, and (ii) such Additional Rentals becoming due during such Renewal Term which can be determined with reasonable accuracy, then an Event of Nonappropriation shall be deemed to have occurred as of the first day of such Renewal Term and the City shall not be obligated to make payment of the Base Rentals or Additional Rentals provided for herein beyond the last day of the Renewal Term preceding such Event of Nonappropriation. Subject to the provisions of the next succeeding sentence, once the City has elected to continue this Master Lease for a Renewal Term by budgeting and appropriating sufficient City Funds for the payment of Base Rentals and Additional Rentals hereunder the City shall, as of the first day of such

Renewal Term, be obligated to pay such Base Rentals and Additional Rentals during such Renewal Term. If the City fails to pay any Base Rentals or Additional Rentals due under this Master Lease, or upon an Event of Nonappropriation the City shall immediately quit and vacate the Projects and its obligation to pay Base Rentals or Additional Rentals hereunder shall terminate. The Trustee shall, upon the occurrence of an Event of Nonappropriation, have all rights and remedies to take possession of the Projects as trustee for the benefit of the Bondholders of the Bonds and the Trustee shall be further entitled to all moneys then on hand and being held in all funds created under the Indenture, less any moneys then due and owing to the Trustee for services performed as trustee thereunder. All property, funds and rights acquired by the Trustee by reason of an Event of Nonappropriation as provided herein shall be held by the Trustee under the Indenture for the benefit of the Bondholders as set forth in said Indenture until the principal of, premium, if any, and interest on the Bonds are paid in full and other amounts payable under the Indenture are paid in full and other amounts payable under the Indenture are paid and any excess shall thereafter be paid to the City.

Section 6.7. Application of Base Rentals, Additional Rentals and Purchase Option Price. All Base Rentals, the Additional Rentals specified in subsections (a), (b), (c), (j) and (k) of Section 6.3 hereof, and, if paid by the City, the Purchase Option Price shall be paid to the Trustee for application in accordance with the Indenture.

Section 6.8. Request for Appropriation. During the Lease Term, the City covenants and agrees as follows:

(a) to include in its annual tentative budget prepared by the appropriate officials acting on behalf of the City in accordance with applicable law an item for expenditure of an amount necessary (after taking into account any and all City Funds then legally available for such purpose), to pay the Base Rentals and reasonably estimated Additional Rentals (calculated pursuant to Section 6.3 hereof) for the Projects during the next succeeding Renewal Term; and

(b) to take such further action (or cause the same to be taken) as may be necessary or desirable to assure that the final budget submitted to the governing body of the City for its consideration seeks an appropriation of City Funds sufficient to pay such Base Rentals and Additional Rentals for each such Renewal Term, including all such actions for such purpose as may be required under State law.

The next inclusion in the City's annual tentative budget shall be made under applicable law prior to the fiscal year commencing 2018, so that the Base Rentals and the reasonably estimated Additional Rentals payable during such Renewal Term will have been appropriated for such purpose, and subsequent inclusions in each respective tentative budget for appropriations by the City shall be made in each fiscal year thereafter so that the Base Rentals and Additional Rentals to be paid during the succeeding Renewal Term will be available for such purposes as long as the governing body of the City determines to approve such amount in the final budget as adopted. To effect the

covenants set forth in (a) above, the City hereby directs its budget officer, or any other officer at the time charged with the responsibility of formulating budget proposals, to include in the tentative budget prepared annually by such budget officer or other officer and submitted to the governing body of the City, in any year in which this Master Lease is in effect, items for all payments required for the ensuing Renewal Term under this Master Lease. It is hereby expressed as the intention of the City that the decision to renew or not to renew the term of this Master Lease is to be made solely by the governing body of the City at the time it considers for adoption of the final budget for each of its fiscal years and corresponding Renewal Terms hereunder, and not by any official of the City, acting in his or her individual capacity as such. In this connection, the City hereby covenants and agrees that such budget officer or other officer shall not amend, modify or otherwise change the appropriations made in any finally adopted budget for the payment of any Base Rentals or Additional Rentals without the express prior approval of the governing body of the City.

ARTICLE VII

ACQUISITION AND CONSTRUCTION OF PROJECTS

Section 7.1. Agreement to Acquire and Construct the Projects. The City and the Authority agree that the Authority shall cause the Projects to be acquired and constructed as herein provided, all of which construction, shall be made in accordance with the plans and specifications for such Projects as approved by the City. The City hereby agrees that in order to effectuate the purposes of this Master Lease, it authorizes the City Representative or the Authority Representative, on behalf of the Authority, to make, execute, acknowledge and transmit any other contracts, orders, receipts, writings and instructions with any other persons, firms or corporations and in general do all things which may be requisite or proper, all for the carrying out and furtherance of the acquisition and construction of the Projects.

The Authority agrees to carry out or to cause to be carried out the acquisition, construction and equipping of any Project through the application of moneys to be disbursed from the Construction Fund by the Trustee utilizing a requisition request complying with the requirements of Section 7.3 herein.

The Authority agrees to cause all Projects to be constructed with all reasonable dispatch, subject only to delays caused by Force Majeure excepted.

The City hereby covenants, to the extent permitted by applicable law, to use other legally available funds and to seek additional legally available funds to the extent necessary to complete the acquisition, construction and equipping of any Project as herein required, or to make certain design changes in such Projects to the extent necessary to complete the acquisition, construction and equipping of such Projects with moneys then available for such purposes in the Construction Fund.

Section 7.2. Application of Proceeds of Series 2016 Bonds. The proceeds from the sale of the Series 2016 Bonds shall be applied as set forth in the First Supplemental Indenture.

Section 7.3. Disbursements From the Construction Fund. The Authority has, in the Indenture, authorized and directed the Trustee to make payments from the Construction Fund under the Indenture to pay the Costs of Acquisition and Construction of the Projects. So long as the Trustee has not received notice nor is deemed to have received notice pursuant to Section 10.1(h) of the General Indenture that an Event of Nonappropriation or Event of Default has occurred and is continuing, the Trustee is hereby authorized to disburse the amounts on deposit in the Construction Fund, as provided herein and therein.

Other than for payment of capitalized interest on the Bonds, which shall be paid by the Trustee without further direction (as prescribed in the First Supplemental Indenture), such payments shall be made upon receipt by the Trustee of a requisition in

substantially the form attached hereto as Exhibit B and signed by the City Representative on which requisition the Trustee is entitled to conclusively rely.

Section 7.4. Establishment of Completion Date; Disbursement of Balance of Construction Fund. The Completion Date with respect to any one Project shall be evidenced to the Trustee by a certificate signed by the City Representative and the Authority Representative stating that, except for amounts retained by the Trustee at the direction of the Authority for any Costs of Acquisition and Construction not then due and payable, (i) the acquisition, construction, installation and improvement of such Project has been completed in accordance with the plans and specifications and all labor, services, materials and supplies used in such acquisition, construction, installation and improvement have been paid for; (ii) all other facilities necessary in connection with such Project have been constructed, acquired and installed to their satisfaction; (iii) such Project is suitable and sufficient for its intended purposes; and (iv) all costs and expenses incurred in the acquisition, construction and equipping of such Project have been paid. Notwithstanding the foregoing, such certificate shall state that it is given without prejudice to any rights against third parties which exist at the date of such certificate or which may subsequently come into being. Upon receipt of such certificate, the Trustee shall retain in the applicable Construction Fund account an aggregate sum equal to the amount estimated by the City Representative and the Authority Representative to be necessary for payment of the Cost of Acquisition and Construction not then due and payable. All moneys then on hand in such Construction Fund account in excess of the amount to be retained shall be transferred by the Trustee, as set forth in a written direction of the Authority and the City, to the Bond Fund to be used by the Trustee as provided in the related Supplemental Indenture.

Section 7.5. Investment of Construction Fund, Bond Fund, Rebate Fund and Debt Service Reserve Fund Moneys. Subject to the provisions of Article VI of the General Indenture, any moneys held as a part of the Construction Fund, the Bond Fund, the Debt Service Reserve Fund or the Rebate Fund or any other fund created under the Indenture shall be invested and reinvested by the Trustee upon the written direction of the City in Investment Obligations (as defined in the Indenture) unless otherwise provided by Supplemental Indenture.

Section 7.6. Design Contracts and Construction Contracts.

(a) The City agrees that upon the occurrence of an Event of Nonappropriation or an Event of Default and upon receipt of a written request from the Trustee, it will assign to the Trustee all of its right, title and interest in and to all Design Contracts and other Project documents. The City shall have and keep on file and available for inspection by the Authority and the Trustee copies of the Design Contracts as soon after the commencement of the Lease Term as such Design Contracts shall become available to the City and throughout the Lease Term.

(b) Each Construction Contract executed in connection with a Project must provide that, upon an Event of Nonappropriation or Event of Default, the

Construction Contract will be fully and freely assignable to the Trustee without the consent of any other person; and that, if the Construction Contract is assumed by the Trustee, the Contractor will perform the agreements contained in the Construction Contract for the Trustee. Each Construction Contract must also provide that, upon an Event of Nonappropriation, an Event of Default or damage to, or destruction or condemnation of, the Project as described in Section 10.1 hereof, the Trustee may terminate such Contract, and the contractor shall then be entitled to payment only from amounts available therefor in the Construction Fund and only for work done prior to such termination. The City agrees that upon the occurrence of an Event of Nonappropriation or an Event of Default and upon receipt of a written request from the Trustee, it will assign to the Trustee all of its right, title and interest in and to all Construction Contracts and other Project documents. Each Construction Contract shall be for a fixed price and shall require the contractor to provide 100% payment and performance bonds as provided in Section 7.8 hereof. In the event of any change order resulting in the performance of additional work in connection with the construction of the Project, the amount of such bonds pertaining thereto shall be increased to include the cost of such additional work or materials or fixtures to be incorporated in the Project. The City shall have and keep on file and available for inspection by the Authority and the Trustee copies of the Project documents as soon after the commencement of the Lease Term as such Project documents shall become available to the City and throughout the Lease Term.

Section 7.7. Defaults Under Design Contracts or Construction Contracts In the event of any material default under any Design Contract or Construction Contract, or in the event of a material breach of warranty thereunder with respect to any materials, workmanship or performance, the City and the Authority shall promptly proceed, either separately or in conjunction with others, to pursue diligently their remedies against the Contractor in default and/or against each surety on any bond securing the performance of such contracts. The Net Proceeds of any amounts recovered by way of damages, refunds, adjustments or otherwise in connection with the foregoing, after deduction of expenses incurred in such recovery (including, without limitation, attorneys' fees and costs) and, after reimbursement to the City or the Authority of any amounts theretofore paid by the City or the Authority and not previously reimbursed to the City or the Authority for correcting or remedying the default which gave rise to the proceedings against the contractor or surety, shall be paid into the applicable Construction Fund account if received before the Completion Date, and shall be used for Costs of Acquisition and Construction of the related Project, or, at the direction of the Authority, shall be transferred by the Trustee into the Bond Fund created under the Indenture to pay principal and/or interest next coming due on the related Series of Bonds.

Section 7.8. Contractor's Performance and Payment Bonds. Each Contractor retained by the City or the Authority in connection with a Construction Contract shall be required to furnish a performance bond and a labor and material payment bond on forms acceptable to the City. Such bond shall be made payable to the Trustee and shall be executed by a corporate surety licensed to transact business in the State and shall be in the full amount of the contract price for such contractor's portion of such Project. If, at

any time during the construction of a Project, the surety on such bond shall be disqualified from doing business in the State, an alternate surety shall be selected by the Authority.

Section 7.9. Contractor's General Public Liability and Property Damage Insurance. Each Contractor and subcontractor retained by the City or the Authority in connection with a Construction Contract shall be required to procure and maintain comprehensive general public liability and property damage insurance as applicable, at his own cost and expense, in an amount that is consistent with prudent practice during the duration of such Construction Contract. Such policies shall carry loss payable endorsements in favor of the Trustee under the Indenture. Such insurance shall include a provision prohibiting cancellation or amendment without ten (10) days' prior notice by certified mail to the Trustee. Such insurance shall provide protection from all claims for bodily injury, including death, and all claims for destruction of or damage to the respective Project arising out of or in connection with such contractor's performance of his contract, whether such operations be by himself or by any subcontractor under him or anyone directly or indirectly employed by the contractor or such subcontractor. All limitations of liability contained in such insurance policy or policies and set forth on such certificate of insurance, and any exclusions provided therein, shall be approved by the City.

Section 7.10. Contractor's Builder's Risk Completed Value Insurance. Unless otherwise obtained by the City or the Authority, each Contractor and subcontractor retained by the City or the Authority in connection with a Construction Contract shall be required to procure and maintain during the term of his contract and until such Project is accepted and insured by the Authority and the City, builder's risk completed value insurance upon the building, facilities or improvements constructed or to be constructed, in whole or in part, by such contractor or subcontractor, insuring against loss or damage caused by fire, malicious mischief, vandalism and such other hazards as may be insured against in the standard extended coverage provisions of such policies used in the State. Such policies shall contain a waiver of subrogation by the issuer of each such policy with respect to the Trustee under the Indenture. Such policies may contain deductible amounts of not more than the amount that is then customary for such policies. Such insurance coverage shall be in an amount at least equal to the contract price for such contractor's or subcontractor's work. In the event of any change order resulting in the performance of additional work in connection with a Project, the amount of such insurance shall be increased to include the cost of such additional work, as well as materials and fixtures to be incorporated in such Project.

Such builder's risk completed value insurance policies shall carry loss payable endorsements in favor of the Trustee under the Indenture. No agency or employee of the City or the Authority shall have the power to adjust or settle any loss with respect to a Project without the prior written consent of the Trustee. Such insurance shall contain provisions prohibiting cancellation or amendment without ten (10) days' prior written notice to the Authority and the Trustee.

Section 7.11. Contractor's Worker's Compensation Insurance. Each contractor and subcontractor retained in connection with a Construction Contract shall be required to procure and maintain worker's compensation insurance during the term of his contract as required by the laws of the State, covering his employees working thereunder, which coverage shall also include occupational disease. Such insurance, if issued by a private carrier, shall contain a provision that such coverage shall not be canceled or amended without ten (10) days' prior written notice to the City. Each Construction Contract shall also provide that each subcontractor of any contractor who is a party to such contract shall be required to furnish similar worker's compensation insurance, including occupational disease coverage.

Section 7.12. Proceeds of Certain Insurance Policies and Performance Bonds. The Net Proceeds of any performance or payment bond or insurance policy required by Section 7.8, Section 7.9 and Section 7.10 of this Master Lease shall be deposited with the Trustee and applied as provided in Section 10.2 of this Master Lease and Section 5.16 of the General Indenture.

ARTICLE VIII

TITLE TO THE PROJECTS; SECURITY INTEREST

Section 8.1. Title to the Projects. A fee simple interest or leasehold interest, as applicable, in the site of the Projects and title to the Projects and any and all additions, repairs, replacements or modifications thereto, shall be held in the name of the Authority, subject to Permitted Encumbrances, at all times until conveyed to the City as provided in Section 12.1 of this Master Lease. The City shall not have any right, title or interest in a Projects or any additions, repairs, replacements, modifications or fixtures thereto except as expressly set forth herein.

Section 8.2. Security Interest. To secure the payment of all of the obligations of the Authority under the Indenture, the Authority shall grant to the Trustee a security interest in the Projects and the Base Rentals received by the Authority under this Master Lease. Upon execution of this Master Lease, the City and the Authority agree that the Authority shall execute the Security Documents and the Indenture. The Authority agrees that the Authority Representative shall, on its behalf, execute such additional documents, including affidavits, notices and similar instruments, in form satisfactory to the Authority or the Trustee, which the Authority or the Trustee reasonably deems necessary or advisable to establish and maintain the security interests to be granted pursuant to this Section 8.2.

ARTICLE IX

MAINTENANCE; TAXES; INSURANCE AND OTHER CHARGES

Section 9.1. Maintenance of the Projects by the City. The City shall, at its own expense from available City Funds, operate, manage, keep and maintain the Projects (or cause the Projects to be operated, managed, kept and maintained) in good working order, condition and repair, including replacements of a capital nature when necessary, and including periodic painting as reasonably determined by the Authority and in accordance with all operating and maintenance manuals and all applicable laws, rules, ordinances, orders and regulations as shall be in effect from time to time of: (1) any federal, state, county, municipal, or other governmental or quasi-governmental agencies and bodies having or claiming jurisdiction thereof and all their respective departments, bureaus, and officials; (2) the insurance underwriting board or insurance inspection bureau having or claiming jurisdiction thereof; and (3) all insurance companies insuring all or any part of the Projects. The foregoing shall not be construed to prohibit the City from challenging the validity or applicability of such laws, rules, ordinances, orders and regulations and to defer compliance until the challenge has been completed.

It is understood and agreed that in consideration of the payment by the City of the Base Rentals and Additional Rentals herein provided for, the Authority is only obligated to provide the Projects in the manner, at the times and to the extent herein provided, and neither the Authority, the Trustee nor any owner of any Bond shall have any obligation to incur any expense of any kind or character in connection with the management, operation or maintenance of the Projects during the term of this Master Lease.

Without limiting the generality of the foregoing, the City shall, as if the City were the absolute owner thereof, assume all responsibility for the Projects (including all surfaces of the buildings and entrances thereto, foundations, ceilings, roof, all glass and show window moldings and all partitions, doors, fixtures, equipment, and appurtenances thereto, including lighting and plumbing systems and fixtures, sewage facilities, electric motors and heating, ventilating and air-conditioning systems, and all landscaping, parking lots, driveways, fences and signs located on the sites where the Projects are located and all sidewalks and parkways located adjacent to the sites where the Projects are located) and pay all costs or cause the payment of all costs of any kind (including operating costs and costs of repair, whether of a capital nature or otherwise) associated therewith.

Section 9.2. Modification of the Projects. The City shall have the privilege of remodeling any Project or making substitutions, additions, modifications and improvements thereto, at its own cost and expense, and the same shall be subject to this Master Lease, the Indenture and the Security Documents, and shall also be included under the terms hereof and thereof; provided, however, that such remodeling, substitutions, additions, modifications and improvements shall not in any way damage such Projects or cause it to be used for purposes other than those authorized under the provisions of this Master Lease, and the Constitution and laws of the State; and provided, however, that such Projects, as remodeled, improved or altered upon completion of such

remodeling, substitutions, additions, modifications and improvements made pursuant to this Article IX shall be of a fair rental value not less than the fair rental value of such Projects immediately prior to the remodeling or the making of substitutions, additions, modifications and improvements. The City shall not permit any mechanic's or other lien to be established or remain against the Projects for labor or materials furnished in connection with any remodeling, substitutions, additions, modifications, improvements, repairs, renewals or replacements so made by the City; provided, however, that if the City shall first notify the Trustee of the intention of the City so to do, the City may in good faith contest any mechanic's or other lien filed or established against the Projects, and in such event may permit the items so contested to remain undischarged and unsatisfied during the period of such contest and any appeal therefrom unless the Trustee shall notify the City that, in the opinion of Independent Counsel, by nonpayment of any such items the security afforded pursuant to the terms hereof and pursuant to the Indenture and the Security Documents will be materially endangered or the Projects or any part thereof will be subject to loss or forfeiture, in which event the City shall promptly pay and cause to be satisfied and discharged all such unpaid items. The Trustee will cooperate fully with the City in any such contest, upon the request and at the expense of the City. Any property for which a substitution or replacement is made pursuant to this Section 9.2 may be disposed of by the City in any manner and in the sole discretion of the City.

Section 9.3. Taxes, Other Governmental Charges and Utility Charges. In the event that a Project or any portion thereof shall, for any reason, be deemed subject to taxation, assessments or charges lawfully made by any governmental body which may be secured by a lien against such Project, an Additional Rental, from and to the extent of City Funds, shall be paid, or cause to be paid, by the City equal to the amount of all such taxes, assessments and governmental charges then due. With respect to special assessments or other governmental charges which may be lawfully paid in installments over a period of years, the City shall be obligated to provide for Additional Rentals only for such installments as are required to be paid during that period that the City is obligated to pay Base Rentals. The City shall not allow any liens for taxes, assessments or governmental charges to exist (including, without limitation, any taxes levied which, if not paid, will become a charge on the rentals and receipts prior to or on a parity with the charge thereon and the pledge and assignment thereof to be created and made in the Indenture), or any interest therein (including the interest of the Authority) on the rentals and revenues derived therefrom or hereunder. The City shall also pay, or shall cause to be paid, as Additional Rentals, from and to the extent of available City Funds, as the same respectively become due, all gas, water, steam, electricity, heat, power, telephone, utility and other charges incurred in the operation, maintenance, use, occupancy and upkeep of the Projects.

As long as the City is in possession of the Projects and except as otherwise provided herein, it shall keep it free and clear of all liens, charges and encumbrances (except Permitted Encumbrances and any encumbrances arising through the Authority) and shall have the responsibility for all management, operations, maintenance and repair of the Projects. The City in its discretion may discharge its responsibility hereunder by: (1) using its own employees; or (2) contracting for services; or (3) subleasing all or portions of the Projects, subject to the provisions of this Master Lease and the Indenture;

or (4) any combination of such methods. No such contract or sublease shall place a greater burden on the Authority than provided herein, nor infringe upon rights granted to or retained by the Authority hereunder, nor violate or in any way impair the Authority's obligations under the Indenture or any other instrument, if any, securing any debt or borrowings by the Authority, all or substantially all the proceeds of which are to be used to finance Projects.

The City may, at the expense and in the name of the City, in good faith contest any such taxes, assessments, utility and other charges and, in the event of any such contest, may permit the taxes, assessments or other charges so contested to remain unpaid during the period of such contest and any appeal therefrom provided the City shall first deposit with the Trustee, or in court, a bond or other security satisfactory to the Trustee pursuant to the Security Documents unless the Trustee shall notify the City that, in the opinion of Independent Counsel, by nonpayment of any such items the security afforded pursuant to the terms hereof and pursuant to the Indenture and the Security Documents will be materially endangered or the Projects or any portion thereof will be subject to loss or forfeiture, in which event such taxes, assessments or charges shall be paid forthwith. In the event that the City shall fail to pay any of the foregoing items required by this Section 9.3 to be paid by the City, the Trustee may (but shall be under no obligation to) pay the same, which amounts, together with interest thereon at a rate per annum equal to the Base Rate, the City agrees to pay from and to the extent of available City Funds.

Section 9.4. Provisions Respecting Insurance. The City agrees to insure or cause to be insured the Projects against loss or damage of the kinds usually insured against by public bodies similarly situated, including, without limitation, policies of casualty and property damage, by means of policies issued by reputable insurance companies duly qualified to do such business in the State with a uniform standard coverage endorsement limited only as may be provided in the standard form of extended coverage endorsement at that time in use in the State, in amounts that are not less than full insurable value of the Projects. The term "full insurable value" as used herein shall mean the actual replacement value, or at the option of the City any lesser amount which is equal to or greater than the principal amount of all of the Bonds then Outstanding of the Series which financed said Projects (or applicable portions thereof in case said Series of Bonds financed more than one Project). Alternatively, the City may insure or cause to be insured under a blanket insurance policy or policies which cover not only the Projects but other properties in the amounts required by the previous sentence.

Any insurance policy issued pursuant to the preceding paragraph of this Section 9.4 shall be so written or endorsed as to make losses, if any, payable to the Trustee. The Net Proceeds of the insurance required in this Section 9.4 shall be applied as provided in Section 10.2 hereof or, at the option of the City, Section 10.3 hereof. Each insurance policy provided for in Section 9.4 hereof shall contain a provision to the effect that the insurance company shall not cancel the policy or modify it materially and adversely to the interest of the City, the Authority or the Trustee without first giving written notice thereof to the City, the Authority and the Trustee at least thirty days in advance of such cancellation or modification. Certificates evidencing all insurance policies issued pursuant to this Section 9.4 or Section 9.5 hereof shall be deposited with Trustee. The

Trustee shall have no obligation to review the sufficiency or form of any insurance required hereunder.

Section 9.5. Public Liability Insurance. The City agrees to carry or cause to be carried public liability insurance with one or more reputable insurance companies in amounts that are typically carried by governmental entities of the same size as the City for property damage for any occurrence. In the event that the limits on governmental liability established by Title 63G, Chapter 7, Utah Code Annotated 1953, as amended, are increased, the amounts required by this Section 9.5 shall be deemed to be increased to such higher amounts. If self-insurance is not utilized, the Authority and the Trustee shall be made additional insureds under such policies. The insurance required by this Section 9.5 may be by blanket insurance policy or policies or self-insurance meeting the following requirements: (i) such program must provide for disbursements therefrom without action (other than a ministerial action) of the governing body of the City and (ii) such program shall be reviewed at least annually by an actuarial consultant (including professional staff of the City), to insure that the reserves established are sufficient for the risks intended to be covered by such program. If self-insurance is not utilized, the policies may have a deductible clause in such amount as shall be approved by the Authority.

Section 9.6. Worker's Compensation Coverage. At all times from the date hereof until the end of the Lease Term, the City shall, either by a policy of insurance or by self-insurance, maintain or cause to be maintained worker's compensation coverage with respect to officers, agents and employees of the City working in, on or about the Projects, including coverage for occupational diseases.

Section 9.7. Advances. In the event the City shall fail to maintain the full insurance coverage required by this Master Lease or to keep the Projects in good repair and operating condition, the Trustee may take out the required policies of insurance and pay the premiums on the same or may make such repairs or replacements as are necessary and provide for payment thereof; which amounts, together with interest thereon at a rate per annum equal to the Base Rate, the City agrees to pay, from and to the extent of available City Funds.

Section 9.8. Failure to Provide Insurance. In the event the Authority is required under Security Documents to reimburse the Trustee for any insurance policies required by this Article, the City will promptly pay directly to the Trustee all premiums for said insurance, and until payment is made by the City therefor, the amount of all such premiums which have been paid by the Trustee shall bear interest at the Base Rate. The City shall, upon the Authority's reasonable request, deposit with the Trustee on the first of each month, monthly installments each in an amount equal to one-twelfth of the estimated aggregate annual insurance premiums on all policies of insurance required by this Article. The City further agrees, upon the Authority's request, to cause all bills, statements or other documents relating to the foregoing insurance premiums to be sent or mailed directly to the Trustee. If at any time and for any reason the funds deposited with the Trustee are or will be insufficient to pay such amounts as may then or subsequently be due, the Authority shall notify the City and the City shall immediately deposit an

amount equal to such deficiency with the Trustee. The City shall pay to the Trustee, all reasonable fees for extraordinary services rendered by the Trustee pursuant to this Section.

ARTICLE X

DAMAGE, DESTRUCTION AND CONDEMNATION; USE OF NET PROCEEDS

Section 10.1. Damage, Destruction and Condemnation. If, prior to the termination of the Lease Term and the payment in full of the Bonds (or the making of provisions for the payment thereof in accordance with the Indenture) (i) the Projects or any material portion thereof shall be destroyed (in whole or in part), or damaged by fire or other casualty; or (ii) title to, or the temporary or permanent use of the Projects or any material portion thereof or the Projects or any material portion thereof shall be taken under the exercise of the power of eminent domain by any governmental body or by any person, firm or corporation acting under governmental authority; or (iii) a material defect in construction of a Project shall become apparent; or (iv) title to or the use of all or any material portion of the Projects shall be lost by reason of a defect in title thereto, the City shall be obligated, from and to the extent of City Funds and subject to the provisions of Section 10.3 of this Master Lease, to continue to pay the amounts specified in Sections 10.2, 6.2 and 6.3 of this Master Lease regardless of whether said Projects shall have been accepted.

Section 10.2. Obligation of the City to Repair and Replace a Project. Subject to the provisions of Section 10.3 of this Master Lease, the City, the Authority, and the Trustee shall cause the Net Proceeds of any insurance policies, performance bonds or condemnation awards with respect to a Project or Projects to be deposited in the Construction Fund account if received before the Completion Date and in a separate trust fund under the Indenture if received thereafter. All Net Proceeds so deposited shall be applied to the prompt repair, restoration, modification or improvement of said Project or Projects by the City upon receipt of a requisition acceptable to the Trustee signed by the City Representative, stating with respect to each payment to be made: (i) the requisition number; (ii) the name and address of the person, firm or corporation to whom payment is due; (iii) the amount to be paid; (iv) that each obligation mentioned therein has been properly incurred, is a proper charge against the applicable Construction Fund account or separate trust fund, and has not been the basis of any previous withdrawal and specifying in reasonable detail the nature of the obligation, accompanied by a bill or a statement of account for such obligation; and (v) such other documents and information as the Trustee requires. The balance of any such Net Proceeds remaining after such repair, restoration, modification or improvement has been completed shall be transferred to the Bond Fund to be applied to the payment of the principal of, premium, if any, and interest on the applicable Series of Bonds, or if said Bonds shall have been fully paid (or provision for payment thereof has been made in accordance with the provisions of the Indenture), any balance remaining in such Construction Fund account(s) or separate trust fund shall be paid to the City. If the Net Proceeds shall be insufficient to pay in full the cost of any repair, restoration, modification or improvement, the City shall, from and to the extent of available City Funds, complete the work and pay any cost in excess of the amount of the Net Proceeds. The City agrees that, if by reason of any such insufficiency of the Net Proceeds, the City shall make any payments pursuant to the provisions of this Section 10.2, the City shall not be entitled to any reimbursement therefor from the Authority, the

Trustee or the Bondholders of the Bonds nor shall the City be entitled to any diminution of the Base Rentals and Additional Rentals payable under Section 6.2 and Section 6.3 of this Master Lease. The City further agrees that any repair, restoration, modification or improvement paid for in whole or in part from such Net Proceeds shall be subject to the security afforded by the Indenture, this Master Lease and the Security Documents, and shall be included under the terms hereof.

Section 10.3. Covenant to Seek Appropriation of Insufficiency of Net Proceeds; Discharge of the Obligation of the City to Repair and Replace the Projects. In the event that the Net Proceeds of any insurance policy, performance bond or condemnation award shall be insufficient to pay in full the cost of any repair, restoration, or modification of a Project or Projects required under Section 10.2 of this Master Lease, the appropriate budget officers of the City shall, within 30 days of notice of such insufficiency, seek an appropriation from the City for an amount equal to any such insufficiency. In the event that the City shall fail to appropriate, by the first day of the next Renewal Term following such request for an appropriation, an amount at least equal to such insufficiency for such purpose, the obligation to repair and replace said Project or Projects under Section 10.2 of this Master Lease may be discharged by depositing the Net Proceeds of the insurance policies, performance bonds or condemnation awards made available by reason of such occurrence into the Bond Fund. Upon the deposit of such Net Proceeds in said Bond Fund, the City shall have no further obligation for the payment of Base Rentals and Additional Rentals hereunder with respect to said Project or Projects, and possession of said Project or Projects as well as all rights created pursuant to this Master Lease and the interest of the City and the Authority therein and in any funds or accounts created under the Indenture with respect to said Project or Projects (except for moneys held in the Rebate Fund and for the payment of Bonds not then deemed Outstanding), shall be surrendered to the Trustee, as trustee for the Bondholders of the applicable Series of Bonds. Thereafter, the Authority's interest in said Project or Projects may be liquidated pursuant to the provisions of and subject to the limitations set forth in the Indenture, Security Documents and the proceeds of such liquidation and the Net Proceeds of any insurance policy, performance bond or condemnation award so deposited in the Bond Fund, as well as all other moneys on deposit in any fund created under the Indenture with respect to said Project or Projects (except moneys held in the Rebate Fund or for the payment of Bonds not then deemed Outstanding), shall be applied to the redemption of the applicable Series of Bonds on the next succeeding redemption date. Such redemption of the applicable Series of Bonds shall be made upon full or partial payment of the principal amount of said Bonds then Outstanding and accrued interest thereon all in accordance with the Indenture.

Section 10.4. Cooperation of the Authority and the Trustee. The Authority and the Trustee shall cooperate fully with the City at the expense of the City in filing any proof of loss with respect to any insurance policy or performance bond covering the events described in Section 10.1 of this Master Lease and in the prosecution or defense of any prospective or pending condemnation proceeding with respect to a Project or Projects or any portion thereof or any property of the City in connection with which a Project is used and will, to the extent it may lawfully do so, and shall permit the City to litigate in any proceeding resulting therefrom in the name and behalf of the Authority and

the Trustee. In no event will the Authority or the Trustee voluntarily settle, or consent to the settlement of, any proceeding arising out of any insurance claim or any prospective or pending condemnation proceeding or any part thereof without the written consent of the City Representative.

Section 10.5. Condemnation of Property Owned by the City. The City shall be entitled to the Net Proceeds of any condemnation award or portion thereof made for destruction of, damage to or taking of its property not included in the Projects.

ARTICLE XI

DISCLAIMER OF WARRANTIES; COMPLIANCE WITH LAWS AND RULES; OTHER COVENANTS

Section 11.1. Disclaimer or Warranties. NEITHER THE AUTHORITY NOR THE TRUSTEE MAKE ANY WARRANTY OR REPRESENTATION, EITHER EXPRESS OR IMPLIED, AS TO THE VALUE, DESIGN, CONDITION, MERCHANTABILITY OR FITNESS FOR A PARTICULAR PURPOSE OR FITNESS FOR USE OF THE PROJECTS OR ANY OF THE EQUIPMENT OR FIXTURES THEREIN OR ANY OTHER REPRESENTATION OR WARRANTY. In no event shall the Authority or the Trustee be liable for any incidental, indirect, special or consequential damage in connection with or arising out of this Master Lease or the existence, furnishing, functioning or the use by the City of any item, product or service provided for herein.

Section 11.2. Further Assurances and Corrective Instruments. The City and the Authority agree that they will, from time to time, execute, acknowledge and deliver, or cause to be executed, acknowledged and delivered, such supplements hereto and such further instruments as may reasonably be required for correcting any inadequate or incorrect description of the Projects hereby leased or intended so to be or for carrying out the intention hereof.

Section 11.3. City and Authority Representatives. Whenever under the provisions hereof the approval of the City or the Authority is required, or the City or the Authority is required to take some action at the request of the other, such approval or such request shall be given for the City by the City Representative and for the Authority by the Authority Representative, and any party hereto and the Trustee shall be authorized to act on any such approval or request.

Section 11.4. Requirements of Law. During the Lease Term, the City and the Authority shall observe and comply promptly with all current and future laws, ordinances, orders, rules and regulations as the same become effective, of the federal, state, county and city governments and of all courts or other governmental authorities having jurisdiction over the Projects or any portion thereof and of all their respective departments, bureaus and officials, and of the insurance regulatory agencies having jurisdiction over the Projects, or any portion thereof, or any other body exercising similar functions, and of all insurance companies writing policies covering the Projects or any portion thereof, whether the same are in force at the commencement of the Lease Term or may in the future be passed, enacted or directed.

Section 11.5. Inspection of the Projects. The City and the Authority agree that the Trustee and their duly authorized agents shall have the right at all reasonable times to enter upon the Projects and to examine and inspect the same. The Trustee and their duly authorized agents shall also be permitted, at all reasonable times, to examine the books, records, reports and other papers of the City and the Authority with respect to the Projects.

Section 11.6. Granting of Easements and Releases. As long as no Event of Default with respect to the Projects shall have happened and be continuing, the City may at any time or times grant easements, licenses, rights of way and other rights or privileges in the nature of easements with respect to any property or rights included in this Master Lease and the Indenture, free from the security interest afforded by or under this Master Lease, the Indenture and the Security Document or the City may release portions of the sites on which a Project or Projects is located or existing easements, licenses, rights of way and other rights and privileges with or without consideration, and the Authority agrees that it shall execute and deliver and will cause and direct the Trustee to execute and deliver, any instrument necessary or appropriate to confirm and grant or release such portion of the Project Site or any such easement, license, right of way or other grant or privilege upon receipt of: (i) a copy of the instrument of grant or release; (ii) a written application signed by the City Representative requesting such instrument and stating that such grant or release will not impair the effective use or interfere with the operation of such Projects or any material portion thereof; and (iii) an opinion of counsel to the City that such grant or release will not materially weaken, diminish or impair the security granted to the Bondholders and contemplated hereby or under this Master Lease, the Indenture or the Security Documents.

Section 11.7. Issuance of Refunding Bonds. Refunding Bonds may be issued by the Authority in accordance with the provisions of Section 2.13 of the General Indenture and with a corresponding effect on the Base Rentals and Additional Rentals due under this Master Lease as provided in Section 4.4 hereof.

Section 11.8. Issuance of Additional Bonds. Additional Bonds may be issued by the Authority in accordance with the provisions of Section 2.14 of the General Indenture and with a corresponding effect on the Base Rentals and Additional Rentals due under this Master Lease as provided in Section 4.4 hereof.

ARTICLE XII

CONVEYANCE OF THE PROJECTS

Section 12.1. Conveyance of the Projects.

(a) The Authority's right and interest in and to all of the Projects shall be transferred, conveyed and assigned by the Authority to the City:

(i) Upon payment by the City to the Trustee of the then applicable Purchase Option Price and upon giving not less than thirty days prior written notice to the Authority and the Trustee; or

(ii) Upon payment by the City to the Trustee of all Base Rentals and Additional Rentals required to be paid under this Master Lease during the Lease Term; or

(iii) Upon the discharge of the lien of the Indenture under Article VIII thereof.

Under the Indenture, the Trustee shall agree to execute such documents and instruments as shall be necessary to effect a release of the security interest granted by said Indenture or the Security Documents upon the payment in full of all of the Bonds.

(b) The City understands that the Purchase Option Price may be revised from time to time based on certain redemptions of Bonds (other than mandatory sinking fund redemptions) or the issuance of any Additional Bonds or Refunding Bonds authorized under the Indenture. In the event the City so elects to purchase all of the Projects as provided herein, the City hereby agrees to pay such applicable Purchase Option Price (together with the other amounts constituting the purchase price for the Projects as provided herein) as it may be revised from time to time by such amounts as are necessary to reflect the redemption of the Bonds or the issuance of Additional Bonds or Refunding Bonds. Nothing herein shall be construed to create any obligation of the City to purchase the Projects.

(c) The City understands that, with respect to the 2016 Project, it may only exercise its option to purchase the 2016 Project only if the purchase option is exercised with respect to all of the various projects that comprise the 2016 Project.

Section 12.2. Release of a Project Upon Payment of Related Series of Bonds. In addition to the purchase option set forth above, the City is hereby granted the option of purchasing a Project in advance of the final maturity of the related Series of Bonds. So long as no Event of Default shall have occurred and be continuing under the Indenture and so long as no Event of Default or Event of Nonappropriation shall have occurred and be continuing under this Master Lease, a Project may be released from the lien created

with respect to the Bonds and the Indenture and this Master Lease and transferred to the City (subject to Permitted Encumbrances and liens and encumbrances resulting from the failure of the City to perform or observe the agreements on its part contained in this Master Lease or otherwise consented to by the City), if (i) the City shall deposit with the Trustee the Purchase Option Price for such Projects; and (ii) there shall have been delivered to the Trustee an opinion of nationally recognized bond counsel to the effect that the release of such Projects will not adversely affect the excludability of interest on the Bonds from federal gross income of the owners thereof or the status of the Bonds as Tax Credit Bonds, if applicable. The City shall be obligated to pay all costs of the Trustee and the Authority in providing for the transfer and release of any Project or portion thereof.

Section 12.3. Conveyance on Purchase of Projects. At the closing of any purchase any or all of the Projects pursuant to the option to purchase granted in this Master Lease, the Authority shall, upon receipt by the Trustee of the Purchase Option Price, or upon the payment by the City of all Base Rentals and Additional Rentals required, or upon discharge of the lien of the Indenture as the case may be, deliver to the City the following:

(a) If necessary, a release by the Trustee of the lien under the Indenture and Security Documents, together with any other instrument necessary or appropriate to release any security interest granted by this Master Lease with respect to the Project or Projects to be released, the Indenture and the Security Documents.

(b) All necessary documents conveying to the City good and marketable title to the Project or Projects to be released as it then exists subject to the following: (i) the right, title and interest of the City in such Project; (ii) those liens and encumbrances created by the City or to the creation or suffering of which the City consented; (iii) those liens and encumbrances resulting from the failure of the City to perform or observe any of the agreements on its part contained in this Master Lease; and (iv) Permitted Encumbrances, other than the Indenture, this Master Lease, the Security Documents and any financing statements filed by the Authority pursuant to this Master Lease with respect to the Project or Projects to be released or the Indenture.

Section 12.4. Relative Position of Option and Indenture. The purchase option granted to the City in Section 12.1 hereof with respect to all of the Projects shall be and remain prior and superior to the Indenture and may be exercised whether or not an Event of Nonappropriation or Event of Default shall have occurred and be continuing hereunder or under the Indenture; provided, however, that such option must be exercised before the later of (i) ninety days after notification in writing by the Trustee to the City of the occurrence of an Event of Default under the Indenture, or (ii) the ultimate disposition of the Projects upon exercise of any available foreclosure remedy, and further provided that, as a condition of the exercise of such option, the City must pay, in addition to the Purchase Option Price, any interest payment deficiencies accruing from the date of the Event of Default.

ARTICLE XIII

ASSIGNMENT, SUBLEASING, INDEMNIFICATION AND SELLING

Section 13.1. The Authority to Grant Security Interest to Trustee. The parties hereto agree that pursuant to the Indenture, the Authority shall assign to the Trustee, in order to secure payment of the Bonds, all of the Authority's right, title and interest in the Master Lease, except the Authority's rights to compensation from the City for expenses of the Authority under Section 6.3(d) of this Master Lease, the Authority's rights to indemnification from the City under Section 13.3 of this Master Lease and the obligation of the City to pay any attorneys' fees and expenses incurred by the Authority under Section 14.5 of this Master Lease.

Section 13.2. Assignment and Subleasing by the City. This Master Lease may not be assigned by the City for any reason. All or portions of a Project may be subleased by the City without the necessity of obtaining the consent of the Authority or any Bondholder; subject, however, to each of the following conditions:

(a) a Project may only be subleased to a municipality, school district, agency or other political subdivision of the City or the State, or to a private party if the Authority or the City intends to own such Project through the useful life of such Project, and the Authority or the City determines that such ownership of such Project furthers a legitimate public purpose;

(b) this Master Lease and the obligations of the City to make payment of Base Rentals and Additional Rentals under this Master Lease shall at all times during the Lease Term remain obligations of the City notwithstanding any sublease;

(c) the City shall, prior to the execution of a sublease, furnish or cause to be furnished to the Authority and the Trustee a true and complete copy of each sublease;

(d) any such sublease shall be expressly subordinate to the rights of the Trustee and the Bondholders under the Indenture, this Master Lease and the Security Documents;

(e) receipt by the Trustee of an opinion of bond counsel to the effect that such sublease will not in and of itself cause interest on the Bonds issued to finance such Project to be included in gross income of the owners thereof (if such Bonds were issued as Tax-Exempt Bonds), will not adversely affect the status of the Bonds; and

(f) receipt by the City of the Trustee's written consent to such sublease.

After an Event of Default or an Event of Nonappropriation and the foreclosure of the security afforded under this Master Lease, the Indenture or the Security Documents, the Trustee may collect the amount of the Base Rentals and Additional Rentals allocable to any sublease from any and all sublessees.

Section 13.3. Release and Indemnification Covenants. To the extent of the Net Proceeds of the insurance coverage of the City, the City shall and hereby agrees to indemnify and save the Authority and the Trustee harmless against and from all claims, by or on behalf of any person, firm, corporation or other legal entity arising from any work or thing done on, the Projects during the Lease Term from: (i) any condition of the Projects; and (ii) any act or negligence of the City or of any of its agents, sublessees, contractors or employees or any violation of law or the breach of any covenant or warranty hereunder. The City shall indemnify and save the Authority and the Trustee harmless, from and to the extent of available moneys as set forth above, from any such claim arising as aforesaid from (i) or (ii) above, or in connection with any action or proceeding brought thereon and, upon notice from the Authority or the Trustee, shall defend them or either of them in any action or proceeding.

In exchange for the City's agreement to indemnify the Trustee and the Authority as provided in this Section 13.3, the Authority and Trustee hereby agree to cooperate with the City in asserting any cause of action that they might individually or as a group have against any third parties with respect to the Projects. Furthermore, in no event will the Authority or Trustee voluntarily settle or consent to the settlement of any proceeding arising out of any claim applicable to the Projects without the written consent of the City Representative.

Section 13.4. References to Bonds Ineffective After Bonds Paid. Upon payment in full of the Bonds (or provision for payment thereof having been made in accordance with the provisions of the Indenture) and all fees and charges of Trustee, all references in this Master Lease to said Bonds and Trustee shall be ineffective and neither the Trustee nor the Bondholders shall thereafter have any rights hereunder, saving and excepting those that shall have theretofore vested.

Section 13.5. Installation of the Furnishings and Machinery of the City. The City, or any sublessee of the City may, from time to time in its sole discretion and at its own expense, install machinery, equipment and other tangible property in a Project. All such machinery, equipment and other tangible property, except any machinery, equipment and other tangible property substituted for machinery, equipment and tangible property purchased with proceeds of the Bonds as provided in Section 13.6 hereof, shall remain the sole property of the City or sublessee of the City, as applicable, in which neither the Authority nor the Trustee shall have any interest and may be removed by the City or sublessee of the City, as applicable, at any time; provided, however, that the City or sublessee of the City, as applicable, shall be obligated to repair any damage to the Projects, at its own cost and expense, resulting from any such removal.

Section 13.6. Equipment Purchased with Proceeds of the Bonds. Any item of equipment shall be labeled, to the extent practicable, to indicate that it is owned by the

Authority, subject to the Indenture, the Security Documents and this Master Lease. Equipment financed with proceeds of the Bonds may not be relocated by the City from the Projects. Any item of such equipment which shall be determined by the City to be no longer usable in connection with the operation of the Projects may be sold by the City after written notice to the Trustee and upon (i) substitution of equipment of comparable or greater value or (ii) deposit of the proceeds thereof in the Bond Fund. Upon any such sale, the equipment so sold shall be released from the Indenture, this Master Lease, the Security Documents and the security interest created thereunder and hereunder. The parties hereto recognize a $50,000 aggregate de minimis exception to this Section 13.6 for equipment making up a portion of the Projects.

ARTICLE XIV

EVENTS OF DEFAULT AND REMEDIES

Section 14.1. Events of Default Defined. Any one of the following shall be an "Event of Default" under this Master Lease:

(a) Failure by the City to pay any Base Rentals or Additional Rentals required to be paid under Sections 6.2 and 6.3 of this Master Lease at the time specified therein, in the absence of an Event of Nonappropriation; or

(b) Failure by the City to observe and perform any covenant, condition or agreement on its part to be observed or performed, other than as referred to in (a), for a period of thirty days after written notice, specifying such failure and requesting that it be remedied, given to the City by the Trustee, unless the Trustee shall agree in writing to an extension of such time prior to its expiration; provided, however, that if the failure stated in the notice cannot be corrected within the applicable period, the Trustee shall not unreasonably withhold their consent to an extension of such time if corrective action shall be instituted by the City within the applicable period and diligently pursued until the default is corrected; or

(c) The City shall abandon any material portion of a Project; or

(d) The City's interest in this Master Lease or any part thereof shall be assigned or transferred without the written consent of the Authority, either voluntarily or by operation of law, except as permitted hereunder; or

(e) The City shall file any petition or institute any proceedings wherein or whereby the City seeks to be adjudicated a bankrupt, or to be discharged from any and all of its debts or obligations, or offers to the City's creditors to effect a composition or extension of time to pay the City's debts, or seeks a reorganization or a readjustment of the City's debts, or for any other similar release, or any such petition or any such proceedings of the same or similar kind or character shall be filed, or instituted or taken against the City and the same shall not have been dismissed or otherwise resolved in favor of the City within sixty days from the filing or institution thereof.

The foregoing provisions of this Section 14.1 are subject to the following limitations: (i) the obligations of the City to make payments of the Base Rentals and Additional Rentals as provided in Section 6.2 and Section 6.3 of this Master Lease shall be subject to the occurrence of an Event of Nonappropriation; and (ii) if, by reason of Force Majeure, the City shall be unable, in whole or in part, to carry out any agreement on its part herein contained, other than the obligations on the part of the City contained in Article VI hereof, the City shall not be deemed in default during the continuance of such inability. The City agrees, however, to remedy with all reasonable dispatch the cause or causes preventing the City from

carrying out its agreement; provided, however, that the settlement of strikes, lockouts and other industrial disturbances shall be entirely within the discretion of the City, and the City shall not be required to make settlement of strikes, lockouts and other industrial disturbances by acceding to the demands of the opposing party or parties when such course is, in the judgment of the City, unfavorable to the City.

Section 14.2. Remedies on Default. Whenever any Event of Default referred to in Section 14.1 of this Master Lease shall have happened and be continuing, subject to the limitations contained in the Indenture, the Trustee or the Authority with the written consent of the Trustee, shall have the right, at their or its option without any further demand or notice, to take one or any combination of the following remedial steps:

(a) Immediately reenter and take possession of the Projects;

(b) Exercise any rights or remedies as the Trustee may have under the Security Documents; or

(c) Take whatever action at law or in equity may appear necessary or desirable to enforce their or its rights in and to the Projects, including, without limitation, the right to terminate the Lease Term.

Upon the occurrence of an Event of Default, the City shall immediately quit and vacate the Projects and its obligation to pay Base Rentals or Additional Rentals hereunder shall terminate. Any moneys collected pursuant to action taken under this Section 14.2 shall be paid into the Bond Fund and applied in accordance with the provisions of the Indenture.

Section 14.3. Limitations on Remedies. No judgment requiring a payment of money may be entered against the City by reason of an Event of Default under this Master Lease, except as expressly provided herein. In the event the security interest created under the Indenture, this Master Lease or the Security Documents shall be foreclosed subsequent to the occurrence of an Event of Default, no deficiency judgment may be entered against the City or the Authority.

Section 14.4. No Remedy Exclusive. No remedy herein conferred upon or reserved to the Authority and the Trustee is intended to be exclusive, and every such remedy shall be cumulative and shall be in addition to every other remedy given hereunder or now or hereafter existing at law or in equity. No delay or omission to exercise any right or power accruing upon an Event of Default shall impair any such right or power or shall be construed to be a waiver thereof, but any such right and power may be exercised from time to time and as often as may be deemed expedient. In order to entitle the Authority and the Trustee to exercise any remedy reserved in this Article XIV, it shall not be necessary to give any notice, other than such notice as may be required in this Article XIV.

Section 14.5. Agreement to Pay Attorneys' Fees and Expenses. In the event that either party hereto shall default under any of the provisions hereof and the nondefaulting

party shall employ attorneys or incur other expenses for the collection of Base Rentals and Additional Rentals, or the enforcement of performance or observance of any obligation or agreement on the part of the defaulting party herein contained, the defaulting party agrees that it shall on demand therefor pay to the nondefaulting party the fees of such attorneys and such other expenses so incurred by the nondefaulting party, to the extent that such attorneys' fees and expenses may be determined to be reasonable by a court of competent jurisdiction; provided, however, that the obligation of the City under this Section 14.5 shall be subject to the availability of City Funds and the obligation of the Authority shall be limited to amounts legally available therefor.

Section 14.6. No Additional Waiver Implied by One Waiver. In the event that any agreement contained herein should be breached by either party and thereafter waived by the other party, such waiver shall be limited to the particular breach so waived and shall not be deemed to waive any other breach hereunder.

ARTICLE XV

MISCELLANEOUS

Section 15.1. Lease Term. This Master Lease shall remain in effect from the date hereof until the termination of the Lease Term as provided in Section 4.2 of this Master Lease.

Section 15.2. Notices. All notices, certificates or other communications hereunder shall be sufficiently given and shall be deemed given when delivered or mailed by registered or certified mail, postage prepaid, addressed as follows: if to the Authority, the Municipal Building Authority of West Valley City, Utah, 3600 Constitution Blvd, West Valley City, Utah, 84119, Attention: Chair/President; if to the City, West Valley City, 3600 Constitution Blvd., West Valley City, Utah, 84119, Attention: Mayor; if to the Trustee, _____, _____, Salt Lake City, Utah 841__, Attention: Corporate Trust Department. A duplicate copy of each notice, certificate or other communication given hereunder by the Authority and the City shall also be given to the Trustee. The Authority, the City and the Trustee may, by notice given hereunder, designate any further or different addresses to which subsequent notices, certificates or other communications shall be sent.

Section 15.3. Binding Effect. This Master Lease shall inure to the benefit of and shall be binding upon the Authority, the City and their respective successors and assigns, subject, however, to the limitations contained in Sections 2.2(f) and 13.2 of this Master Lease.

Section 15.4. Severability. In the event any provision of this Master Lease (other than the obligation of the City to pay Base Rentals or Additional Rentals) shall be held invalid or unenforceable by any court of competent jurisdiction, such holding shall not invalidate or render unenforceable any other provision hereof and in the event any provision of this Master Lease were to invalidate the Bonds, such provision shall be rendered invalid and unenforceable, but shall not invalidate or render unenforceable any other provision hereof.

Section 15.5. Amounts Remaining in the Bond Fund and Debt Service Reserve Fund; Dissolution. It is agreed by the parties hereto that any amounts remaining in the Bond Fund and the Debt Service Reserve Fund upon expiration or sooner termination of the Lease Term, as provided in this Master Lease, after payment in full of the Bonds (or provision for payment thereof having been made in accordance with the provisions of the Indenture) and the fees and expenses of Trustee and any paying agents in accordance with the Indenture and all other amounts due under the Indenture, shall belong to and be paid to the City by the Trustee as an overpayment of Base Rentals and Additional Rentals. Upon dissolution of the Authority, after payment in full of the Bonds (or provision for payment thereof having been made in accordance with the provisions of the Indenture) and payment in full of other obligations of the Authority, any assets and net earnings of the Authority shall be paid to the City in accordance with the Building Authority Act.

Section 15.6. Amendments, Changes and Modifications. Subsequent to the issuance of the Bonds and prior to their payment in full (or provision for the payment thereof having been made in accordance with the provisions of the Indenture), and except as otherwise herein expressly provided, this Master Lease may not be effectively amended, changed, modified, altered or terminated without the written consent of the Trustee in accordance with provisions of the Indenture.

Section 15.7. Execution in Counterparts. This Master Lease may be simultaneously executed in several counterparts, each of which shall be an original and all of which shall constitute but one and the same instrument.

Section 15.8. Net Lease. This Master Lease shall be deemed and construed to be a "net lease," and the City shall pay absolutely net during the Lease Term the Base Rentals, Additional Rentals and all other payments required hereunder, free of any deductions, and without abatement, deduction or setoff, other than those herein expressly provided.

Section 15.9. Applicable Law. This Master Lease shall be governed by and construed in accordance with the laws of the State.

Section 15.10. Captions. The captions or headings in this Master Lease are for convenience only and in no way define, limit or describe the scope or intent of any provisions or Sections of this Master Lease.

Section 15.11. No Personal Liability. No person executing this Master Lease or any of the Bonds, the Indenture or the Security Documents shall be subject to personal liability or accountability by reason of such action or the issuance of the Bonds.

IN WITNESS WHEREOF, the Authority has caused this Master Lease to be executed in its corporate name with its corporate seal hereunto affixed and attested by a duly authorized officer. The City has executed this Master Lease in its name with its seal hereunto affixed and attested by a duly authorized officer. All of the above occurred as of the date first above written.

MUNICIPAL BUILDING AUTHORITY
OF WEST VALLEY CITY, UTAH

(SEAL)

By_____
Chair/President

ATTEST AND COUNTERSIGN:

By_____
Secretary-Treasurer

WEST VALLEY CITY, UTAH

(SEAL)

By_____
Mayor

ATTEST AND COUNTERSIGN:

By_____
City Recorder

STATE OF UTAH)
:ss.
COUNTY OF SALT LAKE)

The foregoing instrument was acknowledged before me this _____, 2016, by _____ and _____, respectively the Chair/President and Secretary-Treasurer of the Municipal Building Authority of West Valley City, Utah.

_____
NOTARY PUBLIC

STATE OF UTAH)
:ss.
COUNTY OF SALT LAKE)

The foregoing instrument was acknowledged before me this _____, 2016, by _____ and _____, respectively, the Mayor and City Recorder of West Valley City, Utah.

_____
NOTARY PUBLIC

EXHIBIT A

PROJECT SITE

All real property located or the land located in Salt Lake County, Utah, described as follows:

EXHIBIT B

FORM OF REQUISITION

RE: The Municipal Building Authority of West Valley City, Utah Lease Revenue [Refunding] Bonds, Series ____ in the sum of $_____

_____
Corporate Trust Department

_____
Salt Lake City, Utah 841__

You are hereby authorized to disburse from the Series _____ Construction Fund Account with regard to the above-referenced bond issue the following:

REQUISITION NUMBER: _____

NAME AND ADDRESS OF PAYEE:
_____

_____

_____

AMOUNT: $_____

PURPOSE FOR WHICH EXPENSE HAS BEEN INCURRED (bill or statement of account or summary of expenses to be reimbursed to City attached; partial release from all contractors, subcontractors and suppliers who have provided services or materials to the Series ____ Project on file with the City): _____
_____

_____

Each obligation, item of cost, or expense mentioned herein has been properly incurred, is a proper charge against [the _____ Subaccount of] the Series ____ Construction Fund Account, has not been the basis for a previous withdrawal, constitutes a Cost of Acquisition and Construction of the Series ____ Project and will be used to acquire, purchase, construct, install or improve the Series ____ Project.

There has not been filed or served upon the Authority or the City, notice of any lien, right to lien, attachment upon, or claim affecting the right to receive payment of, any of the moneys payable to any of the persons named in this Requisition, which has not been released or will not be released simultaneously with such payment, other than

materialmen's or mechanics' liens accruing by operation of law which will not be released until final payment is made.

Performance, labor, materials and other bonds as required in the Master Lease have been obtained by each contractor or subcontractor to whom payment is to be made pursuant to this Requisition.

DATED_____

MUNICIPAL BUILDING AUTHORITY
OF WEST VALLEY CITY, UTAH

By:_____

Its:_____

EXHIBIT C

BASE RENTAL PAYMENT SCHEDULE

Date	Principal	Interest	Total

PRELIMINARY OFFICIAL STATEMENT DATED _____, 2016

NEW ISSUE--Issued in Book-Entry-Only Form **Ratings: _____ "_____"**

In the opinion of Ballard Spahr LLP, Bond Counsel to the Authority, interest on the Series 2016 Bonds is excludable from gross income for purposes of the federal income tax, assuming continuing compliance with the requirements of the federal tax laws. Interest on the Series 2016 Bonds is not a preference item for purposes of either individual or corporate federal alternative minimum tax; however, interest paid to corporate holders of the Series 2016 Bonds may be indirectly subject to alternative minimum tax under certain circumstances. Bond Counsel is also of the opinion that interest on the Series 2016 Bonds is exempt from State of Utah individual income taxes under currently existing law. See "TAX MATTERS" herein.

$_____*

MUNICIPAL BUILDING AUTHORITY OF WEST VALLEY CITY, UTAH LEASE REVENUE AND REFUNDING BONDS, SERIES 2016

Payable from Base Rentals to be Made by
WEST VALLEY CITY, UTAH
Pursuant to an Annually Renewable Lease

Dated: Date of Delivery **Due: _____, as shown on the inside front cover**

The Series 2016 Bonds are issuable as fully registered bonds and when initially issued will be registered in the name of Cede & Co., as nominee of DTC, which will act as securities depository for the Series 2016 Bonds. Purchases of Series 2016 Bonds will be made in book-entry form only, in the principal amount of $5,000 or any integral multiple thereof, through brokers and dealers who are, or who act through, DTC participants. Owners of the Series 2016 Bonds will not be entitled to receive physical delivery of bond certificates so long as DTC or a successor securities depository acts as the securities depository with respect to the Series 2016 Bonds. Interest on the Series 2016 Bonds is payable on _____ and _____ of each year, commencing _____ , 20___, by _____, as Paying Agent, all as more fully described herein. Payment of the principal of and interest on such Series 2016 Bonds will be made directly to DTC or its nominee. Disbursement of such payments to DTC participants is the responsibility of DTC and disbursement of such payments to the beneficial owners is the responsibility of DTC participants. See "THE SERIES 2016 BONDS—Book-Entry System" herein.

The Series 2016 Bonds are subject to optional, [mandatory sinking fund,] and extraordinary redemption prior to maturity. See "THE SERIES 2016 BONDS—Redemption" herein.

The Series 2016 Bonds are being issued to (i) finance the acquisition and construction of a new fire station and the remodeling of an existing fire station and related improvements (the "Fire Station Projects"); (ii) refinance the Maverik Center (the "Maverik Center Project" and together with the Fire Station Projects, the "2016 Project"), by refunding the Authority's outstanding lease revenue bonds relating to the Maverik Center (the "Refunded Bonds"); [(iii) fund a debt service reserve fund]; and (iv) pay costs associated with the issuance of the Series 2016 Bonds.

The Series 2016 Bonds are issued under and are equally and ratably secured by the Indenture. Pursuant to the Indenture, the Authority has pledged and assigned to the Trustee, among other things, its right, title and interest in and to the Lease, including its right to receive the Base Rentals under the Lease as security for the payment of the principal of, premium, if any, and interest on the Bonds. In addition, the Authority has granted a security interest in that portion of the [Maverik Center Project financed by the Authority and in the Fire Station Projects, pursuant to a Leasehold Deed of Trust, Assignment of Rents and Security Agreement for the equal and proportionate benefit of the owners of the Bonds. The Bonds are limited obligations of the Authority payable solely from the revenues and receipts received pursuant to the Lease and other funds or amounts held by the Trustee under the Indenture as security for the Bonds.

Under the Lease, the City has agreed to make payments in stated amounts which are sufficient to pay the principal of and the interest on the Bonds coming due in each year but only if and to the extent that the City Council annually appropriates funds sufficient to pay the Base Rentals coming due during each succeeding Renewal Term under the Lease plus such additional amounts as are necessary to operate and maintain the Projects during such period. The Lease specifically provides that nothing therein shall be construed to require the City Council to appropriate any money to pay any Base Rentals or Additional Rentals thereunder and that the City shall not be obligated to pay such Rentals except to the extent appropriated.

THE OBLIGATION OF THE CITY TO PAY ANY RENTALS IS ANNUALLY RENEWABLE AS PROVIDED IN THE LEASE. NEITHER THE OBLIGATIONS OF THE CITY TO PAY RENTALS NOR THE OBLIGATION OF THE AUTHORITY TO PAY THE BONDS WILL CONSTITUTE A DEBT OF THE CITY OR THE STATE OR ANY POLITICAL SUBDIVISION THEREOF. THE ISSUANCE OF THE SERIES 2016 BONDS DOES NOT DIRECTLY OR CONTINGENTLY OBLIGATE THE CITY TO PAY ANY RENTALS BEYOND THOSE APPROPRIATED FOR THE CITY'S THEN CURRENT FISCAL YEAR. THE SERIES 2016 BONDS ARE NOT AN INDEBTEDNESS OR A LIABILITY OF THE CITY OR THE STATE. THE AUTHORITY HAS NO TAXING POWER.

The Series 2016 Bonds are offered when, as and if issued by the Authority and subject to the approval of their legality by Ballard Spahr LLP, Bond Counsel to the Authority. Certain legal matters will be passed upon for the Authority and the City by the office of the City Attorney, Counsel to the Authority and the City. It is expected that the Series 2016 Bonds, in book-entry-only form, will be available for delivery to DTC or its agent on or about _____, 2016.

This cover page contains certain information for quick reference only. It is not a summary of this issue. Investors must read the entire Official Statement to obtain information essential to the making of an informed investment decision.

This Official Statement is dated _____, 2016 and the information contained herein speaks only as of that date.

[UNDERWRITER]

* Preliminary; subject to change.

This Preliminary Official Statement and the information contained herein are subject to completion or amendment. Under no circumstances shall this Preliminary Official Statement constitute an offer to sell or the solicitation of an offer to buy, nor shall there be any sale of the securities, in any jurisdiction in which such offer, solicitation or sale would be unlawful prior to registration or qualification under the securities laws of such jurisdiction.

$_____*
MUNICIPAL BUILDING AUTHORITY OF
WEST VALLEY CITY, UTAH
LEASE REVENUE AND REFUNDING BONDS,
SERIES 2016

MATURITY SCHEDULE

Due (_____)	Principal Amount	Interest Rate	Yield	CUSIP No.**
				95640E _____

* Preliminary; subject to change.

** The above-referenced CUSIP numbers have been assigned by an independent company not affiliated with the parties to this Bond transaction and are included solely for the convenience of the holders of the Series 2016 Bonds. None of the Authority, the City, the Trustee or the Underwriter is responsible for the selection or use of such CUSIP numbers, and no representation is made as to their correctness on the Series 2016 Bonds or as indicated above. The CUSIP number for a specific maturity is subject to being changed after the issuance of the Series 2016 Bonds as a result of various subsequent actions including but not limited to, a refunding in whole or in part of such maturity or as a result of the procurement of secondary market portfolio insurance or other similar enhancement by investors that is applicable to all or a portion of certain maturities.

No dealer, broker, salesman or any other person has been authorized by the Authority, the City or the Underwriter to give any information or to make any representations, other than those contained in this Official Statement, in connection with the offering contained herein, and, if given or made, such information or representations must not be relied upon. This Official Statement does not constitute an offer or solicitation of an offer to buy nor shall there be any sale of the Series 2016 Bonds by any person in any jurisdiction in which it is unlawful for such offer, solicitation or sale.

The information set forth herein has been obtained from the City, the Authority, [the Insurer], DTC and other sources that are believed to be reliable. The information and expressions of opinion herein are subject to change without notice, and neither the delivery of this Official Statement nor any sale made thereafter shall under any circumstances create any implication that there has been no change in the affairs of the Authority, the City or in any other information contained herein since the date hereof.

All inquiries relating to this Official Statement and the offering contemplated herein should be directed to the Underwriter. Prospective investors may obtain additional information from the Underwriter or the City which they may reasonably require in connection with the decision to purchase any of the Series 2016 Bonds from the Underwriter.

The yields at which the Series 2016 Bonds are offered to the public may vary from the initial reoffering yields on the inside front cover page of this Official Statement. In addition, the Underwriter may allow concessions of discounts from the initial offering prices of the Series 2016 Bonds to dealers and others. In connection with this offering, the Underwriter may engage in transactions that stabilize, maintain or otherwise affect the market prices of the Series 2016 Bonds. Such transactions, if commenced, may be discontinued at any time.

The Underwriter has provided the following sentence for inclusion in this Official Statement:

> The Underwriter has reviewed the information in this Official Statement in accordance with, and as part of, their responsibilities to investors under the federal securities laws as applied to the facts and circumstances of this transaction, but the Underwriter does not guarantee the accuracy or completeness of such information.

Certain statements included or incorporated by reference in this Official Statement constitute "forward-looking statements" within the meaning of the United States Private Securities Litigation Reform Act of 1995, Section 21E of the United States Securities Exchange Act of 1934, as amended, and Section 27A of the United States Securities Act of 1933, as amended. Such statements are generally identifiable by the terminology used such as "plan," "expect," "estimate," "project," "budget" or other similar words. Forward-looking statements are included in the Official Statement under the captions "INTRODUCTION—Additional Bonds and Refunding Bonds," "THE 2016 PROJECT," "ESTIMATED SOURCES AND USES OF FUNDS," and "DEBT STRUCTURE OF THE AUTHORITY AND THE CITY—Authority and City Obligations," "—Future Financing Plans," and "RISK FACTORS—Additional Parity Debt." The forward-looking statements in this Official Statement are subject to risks and uncertainties that could cause actual results to differ materially from those expressed in or implied by such statements. Readers are cautioned not to place undue reliance on these forward-looking statements, which speak only as of the date hereof.

THE SERIES 2016 BONDS WILL NOT BE REGISTERED UNDER THE SECURITIES ACT OF 1933, AS AMENDED, OR ANY STATE SECURITIES LAW AND WILL NOT BE LISTED ON ANY STOCK OR OTHER SECURITIES EXCHANGE. THE SERIES 2016 BONDS HAVE NOT BEEN APPROVED OR DISAPPROVED BY THE SECURITIES AND EXCHANGE COMMISSION OR ANY STATE SECURITIES COMMISSION, NOR HAS THE SECURITIES AND EXCHANGE COMMISSION OR ANY STATE SECURITIES COMMISSION PASSED UPON THE ACCURACY OR ADEQUACY OF THIS OFFICIAL STATEMENT. ANY REPRESENTATION TO THE CONTRARY IS A CRIMINAL OFFENSE.

The City maintains a website; however, the information presented there is not a part of this Official Statement and should not be relied upon in making an investment decision with respect to the Series 2016 Bonds.

$_____*

MUNICIPAL BUILDING AUTHORITY OF WEST VALLEY CITY, UTAH LEASE REVENUE AND REFUNDING BONDS, SERIES 2016

3600 Constitution Boulevard
West Valley City, Utah 84119
(801) 966-3600

BOARD OF TRUSTEES AND OFFICERS OF THE AUTHORITY

Don Christensen.....President
Karen Lang ..... Vice President
Ron Bigelow.....Trustee
Steve Buhler .....Trustee
Tom Huynh.....Trustee
Lars Nordfelt.....Trustee
Steve Vincent.....Trustee
Nichole Camac..... Secretary-Treasurer

CITY COUNCIL AND CITY ADMINISTRATION

Ron Bigelow.....Mayor
Don Christensen..... Councilmember At-Large
Lars Nordfelt..... Councilmember At-Large
Tom Huynh..... Councilmember District No. 1
Steve Buhler ..... Councilmember District No. 2
Karen Lang ..... Councilmember District No. 3
Steve Vincent..... Councilmember District No. 4
Wayne Pyle.....City Manager
Paul Isaac.....Assistant City Manger
Nicole Cottle..... Assistant City Manager
J. Eric Bunderson.....City Attorney
Nichole Camac..... City Recorder
James D. Welch .....Finance Director

TRUSTEE, PAYING AGENT & REGISTRAR

MUNICIPAL ADVISOR

Lewis Young Robertson & Burningham, Inc.
41 North Rio Grande, Suite 101
Salt Lake City, Utah 84101
(801) 596-0700

BOND AND DISCLOSURE COUNSEL

Ballard Spahr LLP
201 South Main Street, Suite 800
Salt Lake City, Utah 84111
(801) 531-3000

UNDERWRITER

---

* Preliminary; subject to change.

TABLE OF CONTENTS

INTRODUCTION....1
The Authority....1
The City....1
Authority and Purpose....1
Security for and Sources of Payment of the Bonds....2
Additional Bonds and Refunding Bonds....3
[Bond Insurance]....3
Redemption of Series 2016 Bonds....3
Registration, Denominations, Manner of Payment....4
Tax Status of the Series 2016 Bonds....4
Bondholders' Risks....4
Conditions of Delivery, Anticipated Date, Manner and Place of Delivery....4
Basic Documentation....4
Contact Persons....5
Other Information....5
[BOND INSURANCE]....5
THE SERIES 2016 BONDS....5
General....5
Redemption....6
Notice of Redemption....6
Partial Redemption of Bonds....7
Book-Entry System....7
Registration and Exchange of Series 2016 Bonds; Persons Treated as Owners....7
SECURITY AND SOURCES OF PAYMENT FOR THE BONDS....8
General....8
Debt Service Reserve Fund....9
[Reserve Policy]....9
Security Documents....9
Release of Portions of the Projects Upon Payment of Related Series of Bonds....10
Additional Bonds and Refunding Bonds....10
DEBT SERVICE SCHEDULE FOR THE SERIES 2016 BONDS AND OTHER OBLIGATIONS OF THE AUTHORITY....14
PLAN OF REFUNDING....15
ESTIMATED SOURCES AND USES OF FUNDS....15
THE 2016 PROJECT....16
The Maverik Center Project....16
Fire Station Projects....17
THE AUTHORITY....17
Establishment....17
Corporate Powers....18
Statutory Powers....18
Organization....18
WEST VALLEY CITY....19
General Information....19
Form of Government....19
Mayor and Councilmembers....19
City Administration....19
Employee Workforce and Retirement System....19
Budget and Appropriation Process....20
Investment of Funds....21
Additional Information....22
DEBT STRUCTURE OF THE AUTHORITY AND THE CITY....22
Authority Obligations....22
City Obligations....23
Future Financing Plans....24
Investment Policy....24
No Defaulted Bonds or Failure to Renew Lease....24
Debt Authorization And Limit....24
Outstanding General Obligation Bonds....24
Computation Of Direct and Overlapping Debt (For the fiscal year ended June 30, 2015)....25
Debt Ratios....25
FINANCIAL INFORMATION REGARDING THE CITY....26
Sources of General Fund Revenues....26
Five Year Financial Summary....26
General Governmental Expenditures....30
All Government Revenues by Source....31
General Governmental Tax Revenues by Source....32
Sales and Use Tax....32
Utility Franchise Taxes and Fees....32
Certain Property Tax Matters....33
Uniform Fees....33
Tax Levy And Collection....34
Public Hearing on Certain Tax Increases....34
Assessed and Estimated Actual Value of Taxable Property....35
Summary Of The City's Taxable Value....35
Property Tax Levies And Collections....36
Property Tax Rates Direct and Overlapping Governments....37
Principal Property Taxpayers For Fiscal Year Ended June 30, 2015....38
RISK FACTORS....38
Non-Appropriation....38
Changes in Makeup of City Council....39
Expiration or Termination of Lease....39
Limited Remedies....40
City's Ownership Interest....41
Destruction of Projects....41
Depreciation and Obsolescence....42
Continued Use by Hockey Club and the Manager....42
Release of Projects....42
Depreciation and Lack of Residual Value....43
Tax Status....43
Additional Parity Debt....43
LEGAL MATTERS....43
General....43
Absence of Litigation....43
TAX MATTERS....44
UNDERWRITING....45
BOND RATINGS....45
CONTINUING DISCLOSURE UNDERTAKING....45
MISCELLANEOUS....45
Independent Auditors....45
Municipal Advisor....45
Additional Information....46

APPENDIX A GENERAL PURPOSE FINANCIAL STATEMENTS OF WEST VALLEY CITY, UTAH FOR THE FISCAL YEAR ENDING JUNE 30, 2015....A-1
APPENDIX B EXTRACTS OF THE INDENTURE AND THE MASTER LEASE....B-1
APPENDIX C ECONOMIC AND DEMOGRAPHIC INFORMATION REGARDING THE CITY AND SALT LAKE COUNTY....C-1
APPENDIX D FORM OF CONTINUING DISCLOSURE UNDERTAKING....D-1
APPENDIX E FORM OF BOND COUNSEL OPINION....E-1
APPENDIX F PROVISIONS REGARDING BOOK-ENTRY-ONLY SYSTEM....F-1

OFFICIAL STATEMENT
RELATING TO

$_____*
MUNICIPAL BUILDING AUTHORITY OF
WEST VALLEY CITY, UTAH
LEASE REVENUE AND REFUNDING BONDS,
SERIES 2016

Payable from Base Rentals to be Made by
WEST VALLEY CITY, UTAH
Pursuant to an Annually Renewable Lease

INTRODUCTION

This Official Statement is provided to furnish certain information in connection with the issuance by the Municipal Building Authority of West Valley City, Utah (the "Authority"), of its $_____* Lease Revenue and Refunding Bonds, Series 2016 (the "Series 2016 Bonds"). This introduction is not a summary of this Official Statement. It is only a brief description of and guide to, and is qualified by, more complete and detailed information contained in the entire Official Statement, including the cover page and appendices hereto, and the documents summarized or described herein. A full review should be made of the entire Official Statement. The offering of the Series 2016 Bonds to potential investors is made only by means of the entire Official Statement.

See also the following appendices attached hereto: "APPENDIX A—GENERAL PURPOSE FINANCIAL STATEMENTS OF WEST VALLEY CITY, UTAH FOR THE FISCAL YEAR ENDING JUNE 30, 2015"; "APPENDIX B—EXTRACTS OF THE INDENTURE AND THE MASTER LEASE"; "APPENDIX C—STATISTICAL AND GENERAL INFORMATION REGARDING WEST VALLEY CITY"; "APPENDIX D—FORM OF CONTINUING DISCLOSURE AGREEMENT"; "APPENDIX E—FORM OF BOND COUNSEL OPINION"; and "APPENDIX F—PROVISIONS REGARDING BOOK-ENTRY-ONLY SYSTEM."

The Authority

The Authority is a nonprofit corporation created by the City Council of West Valley City, Utah (the "City") pursuant to the Local Building Authority Act, Title 17D, Chapter 2, Utah Code Annotated 1953, as amended (the "Building Authority Act") and the Utah Revised Nonprofit Corporation Act, Title 16, Chapter 6a, Utah Code Annotated 1953, as amended (the "Nonprofit Corporation Act"). The Authority was created by the City for the purpose of financing projects on behalf of the City as provided in the Building Authority Act. For more complete information, see "THE AUTHORITY" herein.

The City

The City is Utah's second most populous city and is nestled in the Salt Lake Valley between the Wasatch and Oquirrh mountain ranges and adjoins and is located southwest of Salt Lake City. It is five minutes from the Salt Lake City International Airport and is easily accessible from two major freeways. In 2014, the City had an estimated population of approximately 134,495 according to the U.S. Census Bureau. The City is classified under Utah law as a city of the first class. For more complete information, see "WEST VALLEY CITY," "FINANCIAL INFORMATION REGARDING THE CITY," "DEBT STRUCTURE OF THE AUTHORITY AND THE CITY," and APPENDICES A and C herein.

Authority and Purpose

The Series 2016 Bonds are being issued pursuant to (i) the Building Authority Act; (ii) the Local Government Bonding Act, Title 11, Chapter 14, Utah Code Annotated 1953, as amended (the "Local Government

---

* Preliminary; subject to change.

Bonding Act"); (iii) the Utah Refunding Bond Act, Title 11, Chapter 27, Utah Code Annotated 1953, as amended (the "Refunding Bond Act"); (iv) a General Indenture of Trust dated as of [June 1], 2016 (the "General Indenture"), as supplemented by a First Supplemental Indenture of Trust dated as of [June 1], 2016 (the "First Supplemental Indenture," and together with the General Indenture, the "Indenture"), each by and between the Authority and _____, as trustee (the "Trustee"); and (v) the authorizing resolution of the Authority adopted on May 10, 2016. The issuance of the Series 2016 Bonds and the execution and delivery of the hereinafter defined Lease and the Indenture were approved by the City pursuant to a resolution adopted by the City Council of the City (the "City Council"), on May 10, 2016.

The Series 2016 Bonds are being issued for the purpose of (i) financing the acquisition and construction of a new fire station and the remodeling of an existing fire station and related improvements (the "Fire Station Projects"); (ii) refinancing the Maverik Center (the "Maverik Center Project" and together with the Fire Station Projects, the "2016 Project"), by refunding the Authority's outstanding lease revenue bonds relating to the Maverik Center Project (the "Refunded Bonds"); [(iii) funding a debt service reserve fund]; and (iv) paying costs associated with the issuance of the Series 2016 Bonds.

The Authority issued its Lease Revenue and Refunding Bonds, Series 2006A Bonds (the "Series 2006A Bonds") to refinance a portion of the costs of the acquisition, construction and equipping of a multipurpose sports and entertainment facility known as the "Maverik Center" (formerly known as the "E-Center"). In connection with the initial acquisition of the Maverik Center Project, the City made certain equity contributions toward the Maverik Center. As a result of such contributions, the City possesses a 21% undivided ownership interest in the Maverik Center (the "City's Ownership Interest"). The Authority financed and possesses the remaining 79% undivided ownership interest in the Maverik Center (the "Authority's Ownership Interest"). The City's Ownership Interest and the Authority's Ownership Interest in the Maverik Center are administered pursuant to a Co-Tenancy Agreement dated as of June 1, 2002 (the "Co-Tenancy Agreement") between the City and the Authority.

The ground on which the Maverik Center is located (the "Maverik Center Property") is owned by the City. The City is leasing a 79% undivided interest in the Maverik Center Property (the "Maverik Center Ground Leased Property") to the Authority pursuant to a Ground Lease Agreement dated as of [June 1], 2016 (the "Maverik Center Ground Lease"), between the City, as ground lessor, and the Authority, as ground lessee. The term of the Maverik Center Ground Lease will expire on _____ 1, 20__. The Authority's leasehold interest in the Maverik Center Ground Leased Property constitutes a part of that portion of the Maverik Center Project that the City is leasing from the Authority pursuant to the hereinafter referenced Lease (the "Leased Portion of the Maverik Center Project") and references herein to the Leased Portion of the Maverik Center Project include the Authority's leasehold interest in the Maverik Center Ground Leased Property. The Leased Portion of the Maverik Center Project will be leased by the Authority to the City pursuant to an annually renewable Master Lease Agreement dated as of [June 1], 2016 (the "Lease") between the Authority, as lessor, and the City, as lessee between the Authority and the City.

The Authority will also use a portion of the proceeds from the Series 2016 Bonds to finance the Fire Station Projects. The City is the fee simple owner of the sites of the Fire Station Projects. In connection with the financing of the Fire Station Projects, the City will enter into a Ground Lease Agreement dated as of [June 1,] 2016 (the "Fire Station Ground Lease") with the City wherein the City will lease the site of the Fire Station Projects to the Authority. The Fire Station Ground Lease is scheduled to expire on _____, 20___. The leasehold interest in the sites of the Fire Station Projects constitute part of the 2016 Project and references herein to the 2016 Project include the leasehold interest in the sites of the Fire Station Projects. The 2016 Project will be leased by the Authority to the City pursuant to the Lease.

For a further description of the Leased Portion of the Maverik Center Project and the Fire Station Projects, see "THE 2016 PROJECT" herein. The Leased Portion of the Maverik Center Project and the Fire Station Projects are sometimes collectively referred to herein as the "2016 Project."

Security for and Sources of Payment of the Bonds

The Series 2016 Bonds are issued under and are equally and ratably secured by the Indenture. Pursuant to the Indenture, the Authority has pledged and assigned to the Trustee, among other things, its right, title and interest in and to the Lease, including its right to receive the Base Rentals (as defined below) under the Lease as security for

the payment of the principal of, premium, if any, and interest on the Bonds (as hereinafter defined). In addition, the Authority has granted a security interest in the Leased Portion of the Maverik Center Project pursuant to a Leasehold Deed of Trust, Assignment of Rents and Security Agreement dated as of [June 1], 2016, (the "Leasehold Deed of Trust"). The Leasehold Deed of Trust and any financing statements filed in connection therewith are sometimes collectively referred to herein as the "Security Documents." The Security Documents are being executed for the equal and proportionate benefit of the Bondowners. The Bonds are limited obligations of the Authority payable solely from the revenues and receipts received pursuant to the Lease and other funds or amounts held by the Trustee under the Indenture as security for the Bonds.

In connection with the execution and delivery of the Security Documents, the City will grant to the Authority an option to purchase a leasehold interest in the City's Ownership Interest that is co-terminus with the Maverik Center Ground Lease (the "Leasehold Interest") pursuant to an Option to Purchase a Leasehold Interest dated as of [June 1], 2016 (the "Option to Purchase") among the City, the Authority and the Trustee. Pursuant to the Option to Purchase, the Authority is granted the option to purchase the Leasehold Interest upon an Event of Nonappropriation under the Lease. The Option to Purchase will be assigned to the Trustee for the benefit of the Bondholders. The City has granted the Option to Purchase to the Trustee in order to facilitate a reletting or sale of the entire leasehold interest in the Maverik Center Project rather than only the Authority's Ownership Interest in the Maverik Center Project in the event foreclosure procedures become necessary.

Under the Lease, the City has agreed to make payments in stated amounts which are sufficient to pay the principal of and the interest on the Bonds coming due in each year (collectively, the "Base Rentals") but only if and to the extent that the City Council annually appropriates funds sufficient to pay the Base Rentals coming due during each succeeding Renewal Term (as described herein) under the Lease plus such additional amounts (the "Additional Rentals") as are necessary to operate and maintain the Projects during such period. The Lease specifically provides that nothing therein shall be construed to require the City Council to appropriate any money to pay any Base Rentals or Additional Rentals (collectively, the "Rentals") thereunder and that the City shall not be obligated to pay such Rentals except to the extent appropriated.

THE OBLIGATION OF THE CITY TO PAY ANY RENTALS IS ANNUALLY RENEWABLE AS PROVIDED IN THE LEASE. NEITHER THE OBLIGATIONS OF THE CITY TO PAY RENTALS NOR THE OBLIGATION OF THE AUTHORITY TO PAY THE BONDS WILL CONSTITUTE A DEBT OF THE CITY OR THE STATE OR ANY POLITICAL SUBDIVISION THEREOF. THE ISSUANCE OF THE SERIES 2016 BONDS DOES NOT DIRECTLY OR CONTINGENTLY OBLIGATE THE CITY TO PAY ANY RENTALS BEYOND THOSE APPROPRIATED FOR THE CITY'S THEN CURRENT FISCAL YEAR. THE SERIES 2016 BONDS ARE NOT AN INDEBTEDNESS OR A LIABILITY OF THE CITY OR THE STATE. THE AUTHORITY HAS NO TAXING POWER.

Additional Bonds and Refunding Bonds

The Authority may issue Additional Bonds in the future ranking on a parity with the Series 2016 Bonds under the Indenture, on the terms and conditions specified in the Indenture and the Lease, for the purpose of refunding outstanding bonds of the Authority (the "Refunding Bonds") or to finance additional Projects for lease to the City (the "Additional Bonds"). The Series 2016 Bonds and any Additional Bonds and Refunding Bonds are herein collectively referred to as the "Bonds." See "SECURITY AND SOURCES OF PAYMENT FOR THE BONDS—Additional Bonds and Refunding Bonds." Presently, the Authority has no plans to issue any Additional Bonds or Refunding Bonds.

[Bond Insurance]

[*To be determined*]

Redemption of Series 2016 Bonds

The Series 2016 Bonds are subject to optional, [mandatory sinking fund,] and extraordinary redemption as described herein under the caption "THE SERIES 2016 BONDS—Redemption."

Registration, Denominations, Manner of Payment

The Series 2016 Bonds are issuable only as fully registered bonds without coupons and, when initially issued, will be registered in the name of Cede & Co., as nominee for The Depository Trust Company, New York, New York ("DTC"). DTC will act as securities depository of the Series 2016 Bonds. Purchases of Series 2016 Bonds will be made in book-entry form only, in the principal amount of $5,000 or any integral multiple thereof, through brokers and dealers who are, or who act through, DTC Participants (as defined herein). Beneficial Owners (as defined herein) of the Series 2016 Bonds will not be entitled to receive physical delivery of bond certificates so long as DTC or a successor securities depository acts as the securities depository with respect to the Series 2016 Bonds.

Principal of, premium, if any, and interest on the Series 2016 Bonds (interest payable _____ and _____ of each year, commencing _____, each an "Interest Payment Date") are payable through _____, Salt Lake City, Utah, as Paying Agent, to the registered owners of the Series 2016 Bonds, initially DTC. So long as DTC is the registered owner, it is required, in turn, to remit such principal and interest to its Participants, for subsequent disbursements to the Beneficial Owners of the Series 2016 Bonds, as described in "THE SERIES 2016 BONDS—Book-Entry System" herein.

Tax Status of the Series 2016 Bonds

Federal Income Tax. In the opinion of Ballard Spahr LLP, Bond Counsel to the City, interest on the Series 2016 Bonds is excludable from gross income for purposes of federal income tax, assuming continuing compliance with the requirements of the federal tax laws. Interest on the Series 2016 Bonds is not a preference item for purposes of either individual or corporate federal alternative minimum tax ("AMT"); however, interest paid to corporate holders of the Series 2016 Bonds may be indirectly subject to AMT under circumstances described under "TAX MATTERS" herein.

State Income Tax. Bond Counsel is also of the opinion that, under currently existing laws, interest on the Series 2016 Bonds is exempt from State of Utah individual income taxes. See "TAX MATTERS" herein.

Bond Counsel expresses no opinion regarding any other tax consequences relating to ownership or disposition of or the accrual or receipt of interest on the Series 2016 Bonds.

Bondholders' Risks

THE PURCHASE OF THE SERIES 2016 BONDS BEING OFFERED HEREBY INVOLVES A DEGREE OF RISK. AMONG OTHER FACTORS, THERE CAN BE NO GUARANTEE OR ASSURANCE THAT THE CITY COUNCIL WILL BUDGET AND APPROPRIATE SUFFICIENT CITY FUNDS TO MAKE PAYMENT OF BASE RENTALS AND ADDITIONAL RENTALS AS THEY BECOME DUE AND PAYABLE DURING EACH RENEWAL TERM OF THE MASTER LEASE. See the captions "RISK FACTORS" and "APPENDIX B—EXTRACTS OF THE INDENTURE AND THE MASTER LEASE—The Master Lease—Nonappropriation" herein.

Conditions of Delivery, Anticipated Date, Manner and Place of Delivery

The Series 2016 Bonds are offered when, as, and if issued and received by the Underwriter subject to the approval of legality by Ballard Spahr LLP, Bond Counsel to the Authority, and certain other conditions. Certain legal matters will be passed on for the Authority and the City by the office of the City Attorney, Counsel to the Authority and the City. It is expected that the Series 2016 Bonds will be available for delivery to DTC in book-entry form on or about _____, 2016.

Basic Documentation

The Indenture, the Lease, the Security Documents and other documents with respect to the Series 2016 Bonds (collectively, "basic documentation"), establishes the rights and responsibilities of the City, the Authority, the

Trustee and the investors. Basic documentation may be obtained from the persons indicated below in this section under the heading "Contact Persons."

Contact Persons

As of the date of this Official Statement, the chief contact persons for the Authority and the City concerning the Series 2016 Bonds are:

James D. Welch
Finance Director
3600 Constitution Boulevard
West Valley City, Utah 84119
Telephone: (801) 966-3600
jwelch@wvc-ut.us

The chief contact person for the City's Municipal Advisor concerning the Series 2016 Bonds is:

Laura Lewis, Principal
Lewis Young Robertson & Burningham, Inc.
41 North Rio Grande, Suite 101
Salt Lake City, Utah 84101
Telephone: (801) 596-0700
laura@lewisyoung.com

Other Information

This Official Statement speaks only as of its date, and the information contained herein is subject to change. Brief descriptions of the Authority, the City, the 2016 Project, the Series 2016 Bonds, the Lease, the Indenture and the Security Documents are included in this Official Statement. Such descriptions do not purport to be comprehensive or definitive. All references herein to the Lease, the Indenture and the Security Documents are qualified in their entirety by reference to such documents, and references herein to the Series 2016 Bonds are qualified in their entirety by reference to the forms thereof included in the Indenture and the information with respect thereto included in the aforementioned documents, copies of which are available for inspection at the principal office of the Trustee on or after the delivery of the Series 2016 Bonds. During the period of the offering of the Series 2016 Bonds, copies of the preliminary forms of such documents will be available at the office of the Underwriter listed on the cover page hereof.

Definitions of certain terms used herein and in the Indenture and the Master Lease are found in "APPENDIX B" attached hereto.

[BOND INSURANCE]

[*To be determined*]

THE SERIES 2016 BONDS

General

The Series 2016 Bonds will be issued as fully registered Bonds in denominations of $5,000 or any integral multiple thereof and will be dated as of the date of their initial delivery. The Series 2016 Bonds will mature on the dates and bear interest at the rates set forth on the inside front cover page of this Official Statement, payable on _____ and _____ of each year, commencing _____. Interest on the Series 2016 Bonds authenticated prior to the first Interest Payment Date shall be payable from the Dated Date. Interest on the Series 2016 Bonds will be calculated on the basis of a 360-day year consisting of twelve 30-day months. The principal of, premium, if any, and interest on the Series 2016 Bonds will be payable in lawful money of the United States of America. The principal of and premium, if any, on the Series 2016 Bonds will be payable upon presentation and

surrender at the principal corporate trust office of the Trustee in Salt Lake City, Utah to the registered owners thereof, initially DTC. Interest on the Series 2016 Bonds will be payable by check or draft of the Trustee mailed to the registered owner thereof (initially DTC) of record as of the fifteenth day next preceding such Interest Payment Date.

Redemption

Optional Redemption. The Series 2016 Bonds maturing on or prior to _____ are not subject to optional redemption. The Series 2016 Bonds maturing on or after _____, are subject to redemption at the option of the Authority in whole or in part at any time on or after _____, in such order of maturity as shall be directed by the Authority at a redemption price of 100% of the principal amount of the Series 2016 Bonds to be redeemed, plus accrued interest to the date of redemption.

Portions of the Series 2016 Bonds to be redeemed within a maturity shall be selected by lot in such manner as the Trustee may determine.

[Mandatory Sinking Fund Redemption]

[*To be determined.*]

Extraordinary Redemption. The Series 2016 Bonds shall be callable for redemption prior to maturity in whole on any date, if (i) the 2016 Project or a material portion thereof are damaged or destroyed or taken in a condemnation proceeding, or a material defect in the construction of the 2016 Project shall become apparent, or title to or the use of all or any material portion of the Projects shall be lost by reason of a defect in title thereto, (ii) the Net Proceeds of any insurance policy, performance bond or condemnation award made available by reason of one or more such occurrences shall be insufficient to pay in full the cost of repairing or replacing such portion of the 2016 Project, and (iii) the City elects to discharge its obligation to repair and replace such portion of the 2016 Project by depositing such Net Proceeds into the Bond Fund. Upon the deposit of such Net Proceeds in the Bond Fund, the payment obligations of the City with respect to the 2016 Project under the Lease shall terminate and the City shall have no further obligation for the payment of Base Rentals and Additional Rentals thereunder with respect to the 2016 Project, and possession of the 2016 Project, as well as all right, title and interest of the City and the Authority in any funds or accounts created under the Indenture with respect to the 2016 Project shall be surrendered to the Trustee, as trustee for the Bondholders. Thereafter, the Indenture and the Security Documents for the 2016 Project may, subject to the limitations of the Indenture, be foreclosed and the Authority's interest in the 2016 Project liquidated and the proceeds of such liquidation and the Net Proceeds of any insurance policy, performance bond or condemnation award so deposited in the Bond Fund, as well as all other moneys on deposit in any fund created under the Indenture with respect to the Projects (except moneys held in the Rebate Fund or for the payment of Series 2016 Bonds not then deemed outstanding), shall be applied to the redemption of the Series 2016 Bonds at the earliest date practicable, as specified in a written notice from the Authority to the Trustee. Any such redemption of the Series 2016 Bonds shall be made upon payment of all or a prorated portion of the principal amount thereof plus accrued interest thereon to the redemption date. IN THE EVENT THE SERIES 2016 BONDS ARE TO BE REDEEMED BY PAYMENT OF AN AMOUNT LESS THAN THE OUTSTANDING PRINCIPAL AMOUNT THEREOF, AND ACCRUED INTEREST TO THE REDEMPTION DATE, NO FURTHER CLAIM FOR PAYMENT MAY BE HAD BY THE BONDHOLDERS AGAINST THE AUTHORITY, THE CITY OR THE TRUSTEE WITH RESPECT TO SAID SERIES 2016 BONDS. In the event there are moneys remaining in the Bond Fund after payment in full of all Series 2016 Bonds, the Trustee is authorized and directed to transfer said moneys to the City.

Notice of Redemption

In the event any of the Series 2016 Bonds are to be redeemed, the Registrar shall cause notice to be given as provided in the Indenture. Notice of such redemption (i) shall be filed with the Paying Agent and (ii) shall be mailed by first class mail, postage prepaid, to all Registered Owners of Series 2016 Bonds to be redeemed at their addresses as they appear on the registration books of the Registrar at least thirty (30) days but not more than sixty (60) days prior to the date fixed for redemption.

In addition to the foregoing, further notice of any redemption of Series 2016 Bonds shall be given by the Trustee, at least two (2) Business Days in advance of the mailed notice to Registered Owners, by registered or certified mail or overnight delivery service, to all registered securities depositories then in the business of holding substantial amounts (as reasonably determined by the Trustee) of obligations of types comprising the Series 2016 Bonds and to at least two national information services that disseminate notices of redemption of obligations such as the Series 2016 Bonds. Failure to give all or any portion of such further notice shall not in any manner defeat the effectiveness of a call for redemption.

If at the time of mailing of any notice of redemption there shall not be on deposit with the Trustee moneys sufficient to redeem all the Series 2016 Bonds called for redemption, such notice shall state that such redemption is subject to the deposit of the redemption moneys with the Trustee not later than the opening of business five days prior to the redemption date and that such notice shall be of no effect unless such moneys are so deposited.

A second notice of redemption shall be given, not later than ninety (90) days subsequent to the redemption date, to Registered Owners of Series 2016 Bonds or portions thereof redeemed but who failed to deliver Series 2016 Bonds for redemption prior to the 60th day following such redemption date. Any notice mailed shall be conclusively presumed to have been duly given, whether or not the owner of such Series 2016 Bonds receives the notice. Receipt of such notice shall not be a condition precedent to such redemption, and failure so to receive any such notice by any of such registered Owners shall not affect the validity of the proceedings for the redemption of the Series 2016 Bonds.

Partial Redemption of Bonds

In case any registered Series 2016 Bond shall be redeemed in part only, upon the presentation of such Bond for such partial redemption, the Authority shall execute and the Trustee shall authenticate and shall deliver or cause to be delivered to or upon the written order of the Registered Owner thereof, at the expense of the Authority, a Series 2016 Bond or Series 2016 Bonds of the same interest rate and maturity, in aggregate principal amount equal to the unredeemed portion of such registered Series 2016 Bond. A portion of any Series 2016 Bond of a denomination of more than $5,000 to be redeemed will be in the principal amount of $5,000 or an integral multiple thereof and in selecting portions of such Series 2016 Bonds for redemption, the Trustee will treat each such Series 2016 Bond as representing that number of Series 2016 Bonds of $5,000 denomination which is obtained by dividing the principal amount of such Series 2016 Bonds by $5,000.

Book-Entry System

The Bonds originally will be issued solely in book-entry form to The Depository Trust Company ("DTC"), New York, New York, or its nominee, Cede & Co., to be held in DTC's book-entry system. So long as such Bonds are held in the book-entry-only system, DTC or its nominee will be the registered owner or Holder of such Bonds for all purposes of the Bonds and this Official Statement. Purchases of beneficial ownership interests in the Bonds may be made in denominations described above. For a description of the book-entry-only system for the Bonds, see "APPENDIX F—PROVISIONS REGARDING BOOK-ENTRY-ONLY SYSTEM" herein.

Registration and Exchange of Series 2016 Bonds; Persons Treated as Owners

The Authority shall cause books for the registration and for the transfer of the Series 2016 Bonds to be kept by the Trustee which is also the Bond Registrar of the Authority.

In the event the book-entry-only system is discontinued, any Series 2016 Bond may, in accordance with its terms, be transferred only upon the registration books kept by the Registrar, by the person in whose name it is registered, in person or by his duly authorized attorney, upon surrender of such Series 2016 Bond for cancellation, accompanied by delivery of a written instrument of transfer in a form approved by the Registrar, duly executed. No transfer shall be effective until entered on the registration books kept by the registrar. Upon surrender for transfer of any Series 2016 Bond at the principal office of the Trustee, duly endorsed for transfer or accompanied by an assignment duly executed by the Bondholder or his attorney duly authorized in writing, the Authority shall execute and the Trustee shall authenticate and deliver in the name of the transferee or transferees a new, fully registered Series 2016 Bond or Series 2016 Bonds of the same maturity for a like aggregate principal amount as the Series

2016 Bond surrendered for transfer. In the event the book-entry system is discontinued, Series 2016 Bonds may be exchanged at the principal corporate trust office of the Trustee for a like aggregate principal amount of Series 2016 Bonds of other authorized denominations of the same maturity. The Authority and the Trustee shall not be required to transfer or exchange any Series 2016 Bond (i) during the period from and including any Regular Record Date, to and including the next succeeding Interest Payment Date; (ii) during the period from and including the day fifteen days prior to any Special Record Date, to and including the date of the proposed payment pertaining thereto; (iii) during the period from and including the day fifteen days prior to the mailing of notice calling any Series 2016 Bonds for redemption, to and including the date of such mailing; or (iv) at any time following the mailing of notice calling such Series 2016 Bond for redemption.

The Authority, the Registrar and the Paying Agent may treat and consider the person in whose name each Series 2016 Bond is registered on the registration books kept by the Registrar as the holder and absolute owner thereof for the purpose of receiving payment of, or on account of, the principal or redemption price thereof and interest due thereon and for all other purposes whatsoever, and neither the Authority, nor the Registrar nor the Paying Agent shall be affected by any notice to the contrary. Payment of or on account of either principal of or interest on any Series 2016 Bond shall be made only to or upon order of the Registered Owner thereof or such person's legal representative, but such registration may be changed as provided in the Indenture. All such payments shall be valid and effectual to satisfy and discharge the liability upon such Series 2016 Bond to the extent of the sum or sums so paid.

The Trustee shall require the payment by the Bondholder requesting exchange or transfer of Series 2016 Bonds of any tax or other governmental charges which are required to be paid with respect to such exchange or transfer and such charges shall be paid before such new Series 2016 Bond shall be delivered.

SECURITY AND SOURCES OF PAYMENT FOR THE BONDS

General

The Bonds are not general obligations but are special, limited obligations of the Authority. The Bonds and the interest thereon are payable solely from, and are secured by a pledge of, the Base Rentals, the Purchase Option Price, if paid by the City, and any other amounts derived by the Authority under the Lease and the Indenture, except to the extent payable from certain moneys held under the Indenture (excluding the Rebate Fund) and from the investment thereof, the proceeds of certain insurance policies, performance bonds, condemnation awards and liquidation proceeds, if any. The Bonds and the interest thereon shall not constitute an indebtedness of the City within the meaning of any constitutional provision or statutory limitation and shall not constitute or give rise to a pecuniary liability of the City, nor shall any of the Bonds or interest thereon be a charge against the general credit or taxing powers of the City. Neither the City, nor the Authority on its behalf, has pledged the credit of the City to the payment of the Bonds, the interest thereon or amounts due, or to become due, under the Lease. The Authority has no taxing power.

Under the Lease, the City has agreed to pay Base Rentals in amounts and at times that are sufficient to pay principal of and interest on the Bonds coming due in each fiscal year, but only if and to the extent that the City Council annually appropriates funds sufficient to pay the Base Rentals coming due during each succeeding Renewal Term plus such Additional Rentals as are payable under the Master Lease during such period. The Lease specifically provides that nothing therein shall be construed to require the City to appropriate any moneys to pay the Base Rentals or Additional Rentals thereunder and the City shall not be obligated to pay such Rentals with respect to a Project unless such Project is substantially completed and only to the extent appropriated. Neither the issuance of the Series 2016 Bonds nor the execution and the delivery of the Lease directly or contingently obligate the City to pay any Base Rentals or Additional Rentals beyond those appropriated for the City's then current fiscal year. See "RISK FACTORS" herein.

Under the Lease, the City is entitled not to appropriate Rentals for the next succeeding Renewal Term with respect to all of the Projects, but it is not entitled to elect to appropriate with respect to less than all of the Projects. In other words, the City Council's decision under the Lease whether to appropriate Rentals for each succeeding Renewal Term is "all or nothing."

Debt Service Reserve Fund

The Indenture creates a Debt Service Reserve Fund and provides that a separate account for each Series of Bonds shall be established within the Debt Service Reserve Fund. The Indenture provides that moneys in the Debt Service Reserve Fund shall at all times be maintained in a total aggregate principal amount of not less than the Debt Service Reserve Requirement for all Outstanding Series of Bonds.

"Debt Service Reserve Requirement" means with respect to each Series of Bonds issued pursuant to the Indenture, and unless otherwise provided in the related Supplemental Indenture, an amount equal to the least of (i) 10% of the proceeds of such Series of Bonds determined on the basis of its initial purchase price to the public, (ii) the maximum Aggregate Annual Debt Service Requirement during any Fiscal Year for such Series of Bonds, and (iii) 125% of the average Aggregate Annual Debt Service Requirement for such Series of Bonds; provided, however, that in the event any Series of Additional Bonds is issued to refund only a portion and not all of the then Outstanding Bonds of any other Series of Bonds issued pursuant to the Indenture (the "Prior Bonds"), then the portion of such Series of Prior Bonds that remain Outstanding immediately after the issuance of such Additional Bonds and the portion of such Additional Bonds that is allocable to the refunding of such Series of Prior Bonds shall be combined and treated as a single Series for purpose of determining the Debt Service Reserve Requirement relating to such combined Series. Each Subaccount of the Debt Service Reserve Fund shall only be used with respect to the related Series of Bonds.

A subaccount in the Debt Service Reserve Fund has been established for the Series 2016 Bonds. The Debt Service Reserve Requirement for the Series 2016 Bonds equals $_____ and will be funded by _____.

[Reserve Policy]

[*To be determined.*]

Security Documents

In addition to a pledge of the Base Rentals, the Purchase Option Price, if paid by the City, and any other amounts derived by the Authority under the Lease and the Indenture, the Bonds will be secured by the Security Documents. As previously stated, the City owns a 21% undivided interest in the Maverik Center Project (hereinabove defined as the "City's Ownership Interest") and the Maverik Center Property on which the Maverik Center Project is located. Pursuant to the Maverik Center Ground Lease between the City and the Authority, the City, as ground lessor, has leased to the Authority, as ground lessee, a 79% undivided interest in the Maverik Center Property (hereinabove defined as the "Maverik Center Ground Leased Property"). The term of the Maverik Center Ground Lease expires on _____, 20___. In order to provide additional security to the Bondholders, the Authority has assigned all of its rights and interest in the Maverik Center Ground Lease to the Trustee. In addition, the Authority will encumber its leasehold interest in the Leased Portion of the Maverik Center Project to the Trustee pursuant to the Leasehold Deed of Trust.

As previously stated, the City owns the sites on which the Fire Station Projects are located. Pursuant to the Fire Station Ground Lease, the City, as ground lessor, will lease said sites to the Authority, as ground lessee. The terms of the Fire Station Ground Lease are scheduled to expire on _____, 20__. To provide additional security to the Bondholders, the Authority encumbered its leasehold interest in the Fire Station Projects to the Trustee pursuant to the Leasehold Deed of Trust.

Reference is hereby made to the actual Security Documents for a complete recital of their terms. During the period of the offering of the Series 2016 Bonds, copies of the preliminary forms of Security Documents will be available at the office of the Municipal Advisor. Subsequent to the initial offering of the Series 2016 Bonds, copies of the Security Documents may be obtained from the Trustee. Under the Leasehold Deed of Trust, the Authority will irrevocably warrant, grant, transfer, convey and assign to the Trustee, in trust with power of sale, all of its leasehold right, title and interest in the 2016 Projects, including, but not limited to real property, rents, issues, profits, royalties, income, interest in the leases or subleases, options to purchase, easements, rights of way, proceeds of insurance or condemnation and tangible personal property in order to provide additional security for the

Authority's payment obligations with respect to the Bonds and the Indenture. The Leasehold Deed of Trust generally provides for the procedure by which the Trustee can foreclose the lien on the Projects or sell the Authority's leasehold interest in the Projects to pay the Authority's payment obligations under the Bonds and the Indenture.

No deficiency judgment upon foreclosure of the lien of the Indenture or of the Security Documents may be entered against the City or the Authority, and no judgment requiring a payment of money may be entered against the City under the Lease.

In connection with the execution and delivery of the Security Documents, the City will grant to the Authority an option to purchase a leasehold interest in the City's Ownership Interest that is co-terminus with the Maverik Center Ground Lease (hereinabove defined as the "Leasehold Interest") pursuant to an Option to Purchase a Leasehold Interest dated as of [June 1,] 2016 (the "Option to Purchase") among the City, the Authority and the Trustee. Pursuant to the Option to Purchase, the Authority is granted the option to purchase the Leasehold Interest upon an Event of Nonappropriation under the Lease. The Option to Purchase will be assigned to the Trustee for the benefit of the Bondholders. The City has granted the Option to Purchase to the Trustee in order to facilitate a reletting or sale of the Projects rather than only the Authority's Ownership Interest in the Projects in the event foreclosure procedures become necessary.

Release of Portions of the Projects Upon Payment of Related Series of Bonds

Pursuant to the Lease, the City has been granted the option of purchasing the 2016 Project in advance of the final maturity of the Series 2016 Bonds. So long as no Event of Default shall have occurred and be continuing under the Indenture and so long as no Event of Default or Event of Nonappropriation shall have occurred and be continuing under the Lease, the 2016 Project may be released from the lien created with respect to the Series 2016 Bonds and the Indenture and the Lease and transferred to the City if (i) the City shall deposit with the Trustee the Purchase Option Price for the 2016 Project; and (ii) if the interest payable on the Series 2016 Bonds is excludable from gross income for federal income tax purposes, there shall have been delivered to the Trustee an opinion of nationally recognized bond counsel to the effect that the release of the 2016 Project will not adversely affect the excludability of interest on said Bonds from the federal gross income of the owners thereof.

Additional Bonds and Refunding Bonds

General. Pursuant to the Indenture, the Authority may issue additional Series of Bonds under the Indenture which shall be equally and ratably secured under the Indenture with the Series 2016 Bonds. Prior to the authentication by the Trustee of each Series of Bonds there shall have been filed with the Trustee certain documents, certificates and opinions.

Refunding Bonds. So long as the Master Lease is in effect and no Event of Default under the Indenture or the Master Lease has occurred and is continuing and so long as no Event of Nonappropriation has occurred and is continuing, one or more Series of Refunding Bonds may be issued, authenticated and delivered for the purpose of refunding Bonds or other obligations of the Authority. Such Additional Bonds shall be payable solely from the Base Rentals and, if paid by the City, the Purchase Option Price and other amounts derived from the leasing of the Projects. The Refunding Bonds may be issued in one or more Series, shall be authenticated by the Trustee and, upon payment to the Trustee of the proceeds of said sale of Refunding Bonds, they shall be delivered by the Trustee to or upon the order of the purchasers thereof, but only upon compliance with respect to said Series of Refunding Bonds and upon there being filed with the Trustee:

(a) Original executed counterparts of a Supplemental Indenture, a supplement or amendment (if necessary) to the Security Documents and Master Lease providing for the issuance of such Refunding Bonds, and further providing for a revision to the Base Rentals to be paid by the City under the Master Lease to such amount as shall be necessary to pay, assuming that no Event of Default or Event of Nonappropriation shall occur, the principal of, premium, if any, and interest on the Bonds (including the Refunding Bonds being issued and the Initial Bonds and any Additional Bonds and Refunding Bonds theretofore issued and to remain Outstanding), and to extend the Lease Term if the maturity of any of the Refunding Bonds would otherwise occur after the expiration of the then current Lease Term. The date or

dates of the Refunding Bonds, the rate or rates of interest on the Refunding Bonds, and the redemption provisions (if any) with respect thereto all shall be as provided in the Supplemental Indenture; except that interest on such Refunding Bonds shall be payable on February 1 and August 1 of each year and the principal of such Refunding Bonds shall be payable on August 1 of each year during the term thereof except as otherwise provided in the Supplemental Indenture authorizing the Refunding Bonds.

(b) If the Bonds theretofore issued were intended to bear interest which is excludable from gross income, a written opinion of nationally recognized bond counsel, to the effect that the excludability from gross income of the interest on the Bonds theretofore issued, for federal income tax purposes, will not be adversely affected by the issuance of the Refunding Bonds being issued;

(c) a date down endorsement to the ALTA mortgagee title insurance policy issued in connection with the issuance of the Bonds being refunded or commitment therefor (or if the bonds or other obligations being refunded were not issued pursuant to this Indenture, an ALTA Mortgagee title insurance policy or commitment therefor), which endorsement or policy shall insure to the date of issuance of such Refunding Bonds and the recording of any supplement or amendment to the Security Documents the continuing validity of the lien thereof, as modified by any supplement or amendment to the Security Documents, as a first and prior lien on the premises thereby secured, subject only to Permitted Encumbrances, and which endorsement or policy shall increase the amount of title insurance coverage thereunder, if necessary, to an amount, which when added to the coverage provided under any other title policies delivered with respect to other Bonds then Outstanding, is at least equal to the aggregate principal amount of all Bonds to be Outstanding following said refunding and naming the Trustee as an insured;

(d) (i) A report of an independent verification agent to the effect that, upon the issuance of the Refunding Bonds, moneys and Direct Obligations will be deposited with the Trustee or an escrow agent sufficient to cause the Bonds (or other obligations) being refunded to be deemed paid (or a comparable provision of the documents authorizing the obligations to be refunded); or in the event that the Bonds (or other obligations) to be refunded are to be redeemed on the date of issuance of the Refunding Bonds or within sixty (60) days thereafter, there shall be delivered to the Trustee evidence satisfactory to it that upon the issuance of the Refunding Bonds moneys and Direct Obligations will be deposited with the Trustee or an escrow agent sufficient, without taking into account investment earnings thereon, to redeem the Bonds (or other obligations);

(e) a certificate of the Authority, stating that, as of the date of such delivery, no event or condition has happened or exists and is continuing, or is happening or existing, which constitutes, or which, with notice or lapse of time or both, would constitute, an Event of Default under the Indenture or the Lease and there has not occurred and is then continuing an Event of Nonappropriation; provided however that the existence of an Event of Default shall not preclude the issuance of any Refunding Bonds if: (i) the issuance of such Refunding Bonds otherwise complies with the provisions hereof and (ii) any Event of Default will cease to continue upon the issuance of such Refunding Bonds and the application of the proceeds thereof.

Each Series of Refunding Bonds issued pursuant to the Indenture shall be equally and ratably secured under the Indenture with the Series 2016 Bonds and all other Series of Refunding Bonds and Additional Bonds, if any, theretofore issued pursuant to the Indenture, without preference, priority or distinction of any Bonds over any other thereof.

Additional Bonds. So long as the Lease is in effect and no Event of Default under the Indenture or the Lease has occurred and is continuing and so long as no Event of Nonappropriation has occurred and is continuing, one or more Series of Additional Bonds may be issued, authenticated and delivered for the purpose of financing Costs of Acquisition and Construction of a Project or Projects. Such Additional Bonds shall be payable solely from the Base Rentals and, if paid by the City, the Purchase Option Price and other amounts derived from the leasing of the Projects. The Additional Bonds may be issued in one or more Series, shall be authenticated by the Trustee and, upon payment to the Trustee of the proceeds of said sale of Additional Bonds, they shall be delivered by the Trustee to or upon the order of the purchasers thereof, but only upon compliance hereof with respect to said Series of Additional Bonds and upon there being filed with the Trustee:

(a) Original executed counterparts of a Supplemental Indenture, a supplement or amendment (if necessary) to the Security Documents and Master Lease providing for the financing of a Project and for the issuance of the Additional Bonds and further providing for an increase in the Base Rentals to be paid by the City under the Master Lease in such amount as shall be necessary to pay, assuming that no Event of Default or Event of Nonappropriation shall occur, the principal of, premium, if any, and interest on the Bonds (including the Additional Bonds being issued and the Initial Bonds and any Additional Bonds and Refunding Bonds theretofore issued and Outstanding), and to extend the Lease Term if the maturity of any of the Additional Bonds would otherwise occur after the expiration of the then current Lease Term. The date or dates of the Additional Bonds, the rate or rates of interest on the Additional Bonds, and the redemption provisions (if any) with respect thereto all shall be as provided in the Supplemental Indenture, except that interest on such Additional Bonds shall be payable on [February 1 and August 1] of each year during the term thereof and principal of the Additional Bonds shall, in each year in which principal falls due, be payable on [August 1] except as otherwise provided in the Supplemental Indenture authorizing the Series of Additional Bonds;

(b) If the Bonds theretofore issued were intended to bear interest which is excludable from gross income, a written opinion of nationally recognized bond counsel, to the effect that the excludability from gross income of the interest on the Bonds theretofore issued, for federal income tax purposes, will not be adversely affected by the issuance of the Additional Bonds being issued;

(c) A date down endorsement to the ALTA mortgagee title insurance policy issued in connection with the issuance of the Initial Bonds (or other Bonds) or commitment therefor or an additional ALTA mortgagee title insurance policy or commitment therefor, which endorsement or policy shall insure to the date of issuance of such Additional Bonds and the recording of any supplement to the Security Documents, if required, the continuing validity of the lien thereof, as modified by any supplement to the Security Documents, as a first and prior lien on the premises thereby secured, subject only to Permitted Encumbrances, and which endorsement or additional policy shall increase the amount of title insurance coverage thereunder to an amount at least equal to the aggregate principal amount of the Additional Bonds to be issued (or in the case of Additional Bonds issued to complete or extend a Project previously financed hereunder the endorsement to the original policy for such Project shall increase the coverage to at least the aggregate principal amount of Bonds issued for such Project to be Outstanding upon the issuance of such Additional Bonds) and naming the Trustee as an insured. In the event that the property upon which additional projects are to be located has not been acquired at or prior to the time of issuance of the Additional Bonds, the amendment to the Master Lease relating to such Additional Bonds shall require that such endorsement or additional title policy with respect to such property be delivered at the time of or prior to any disbursements being made from the Construction Fund with respect to such portion of the Project;

(d) if such Series of Additional Bonds is being issued in whole or in part for construction purposes, (i) a copy, duly certified by the Secretary of the Authority, of the project contract and architect's agreement with respect to such construction and the performance and payment bond covering such contract or, in the alternative, a requirement that a copy of such documents be delivered to the Trustee prior to the time that moneys are withdrawn from the Construction Fund with respect to such portions of the Project, and (ii) a certificate of the architect or engineer responsible for planning and designing any such construction which sets forth the estimated useful life of the Project or Projects, as so improved and extended, in compliance with Section 17A-3-904 of the Building Authority Act; and

(e) a certificate of the Authority, stating that as of the date of such delivery no event or condition has happened or exists and is continuing, or is happening or existing, which constitutes, or which, with notice or lapse of time or both, would constitute, an Event of Default under the Indenture or the Master Lease and there has not occurred and is then continuing an Event of Nonappropriation; provided however that the existence of an Event of Default shall not preclude the issuance of any Additional Bonds if: (i) the issuance of such Additional Bonds otherwise complies with the provisions hereof and (ii) any Event of Default will cease to continue upon the issuance of such Additional Bonds and the application of the proceeds thereof.

Each Series of Additional Bonds issued pursuant to the Indenture shall be equally and ratably secured under the Indenture with the Series 2016 Bonds and all other Series of Additional Bonds and Refunding Bonds, if any, theretofore issued pursuant to the Indenture, without preference, priority or distinction of any Bonds over any other thereof.

DEBT SERVICE SCHEDULE FOR THE SERIES 2016 BONDS AND OTHER OBLIGATIONS OF THE AUTHORITY

The following table sets forth the debt service schedule with respect to the Series 2016 Bonds and all other obligations previously issued by the Authority and currently outstanding. All figures are rounded to the nearest dollar.

Fiscal Year Ending June 30	Principal	Interest	Additional Authority Obligations	Fiscal Total

(1) Includes principal and interest. Represents the aggregate debt service on all other obligations issued by the Authority and includes principal and interest. Such obligations are payable from amounts annually appropriated by the City from legally available funds. Such obligations are not secured by the lien of the Indenture or the Security Documents nor are the Series 2016 Bonds secured by the documents pursuant to which such obligations were issued. See "DEBT STRUCTURE OF THE AUTHORITY AND THE CITY—Authority and City Obligations."

(Source: Municipal Advisor)

PLAN OF REFUNDING

A portion of the proceeds of the Series 2016 Bonds will be used to redeem prior to their maturity all of the Refunded Bonds. The Refunded Bonds are being refunded to produce an economic savings. Proceeds of the Series 2016 Bonds will be transferred to the paying agent for the Refunded Bonds in an amount sufficient to pay the principal of and interest on the Refunded Bonds on their scheduled payment dates and to pay the redemption price of and interest accrued on the Refunded Bonds on the scheduled redemption date of August 1, 2016.

The following table sets forth the maturity dates, maturity amounts and interest rates of the Refunded Bonds:

Maturity Date (August 1)	Maturity Amount	Interest Rate
2017	$1,670,000	5.000%
2018	1,750,000	4.180
2019	1,820,000	4.250
2020	1,900,000	4.125
2021	1,980,000	4.500
2022	2,070,000	4.500
2023	2,145,000	4.500
2024	2,240,000	4.500
2025	2,335,000	4.375
2026	2,440,000	4.375
2027	2,540,000	4.350

ESTIMATED SOURCES AND USES OF FUNDS

The following table sets forth the estimated sources and uses of funds in connection with the issuance of the Series 2016 Bonds:

Sources of Funds

Par Amount of the Series 2016 Bonds .....$
[Net] Original Issue Premium .....

Total .....$

Uses of Funds

Refunding of Refunded Bonds .....$
Deposit to Construction Fund.....
Costs of Issuance[1] .....

Total .....$

(1) Includes Underwriter's discount, [bond insurance premium, premium relating to a Reserve Policy,] municipal advisor's fees and costs, legal fees, rating agency fees, trustee fees registrar and paying agent fees, printing fees, rounding amounts and other costs incurred in connection with the issuance and sale of the Series 2016 Bonds.

THE 2016 PROJECT

The Maverik Center Project

Formerly known as the "E-Center," the Maverik Center Project is a multipurpose sports and entertainment facility constructed on the [Maverik Center Property] in the business center of the City. The Maverik Center Project includes a 10,700 fixed and retractable seat arena (the "Arena") with the capability of accommodating an audience of approximately 12,000 by adding folding chairs for show events. The Arena was designed to augment fan experience for hockey events. The Arena features a double concourse design with 40 private luxury suites, half of which are located on the concourse level and the other half of which are located on the club level. In addition, the Arena has six "party" suites which are made available on an event by event basis. The Arena also includes a superior show-quality sound system to ensure a quality concert and event venue. Improvements to the area surrounding the Arena include surface parking (approximately 3,800 spaces), landscaping, road and street improvements and infrastructure improvements to support traffic, sewer, water, electric and other resources required by the arena. Construction of the Maverik Center Project was completed in the fall of 1997.

Financing for the Maverik Center Project was derived from a variety of sources. In addition to the issuance of bonds, the City also applied $2.5 million of its own moneys as well as a $1.9 million contribution from the State of Utah toward the Maverik Center Project. The Authority also issued a series of lease revenue bonds in the approximate amount of $7.1 million, which bonds were retired when the City received a payment from the Salt Lake Organizing Committee for use of the Maverik Center Project during the 2002 Olympic Winter Games. The Redevelopment Agency of West Valley City also issued a series of bonds to encourage economic development within the City in the area surrounding the Maverik Center Property. Approximately $5.8 million of the proceeds of those redevelopment agency bonds were used to reimburse the City for its cost of acquiring the Maverik Center Property and constructing certain infrastructure improvements thereon.

The City has granted use of the Maverik Center Project, less the parking facilities, to The Utah Grizzlies Professional Hockey Club, a Delaware corporation (the "Hockey Club") pursuant to an Arena License Agreement dated as of June 1, 2002 (the "License Agreement"). Pursuant to the License Agreement, the Hockey Club has agreed to pay a rental fee in consideration for, among other things, an exclusive license to enter and use the Maverik Center Project for the purpose of playing professional hockey. The City has also entered into an Maverik Center Management Agreement dated as of June 1, 2002 (the "Management Agreement") with WVE, Inc., a Utah Corporation (the "Manager"), under which the City pays the Manager a fee in consideration for the right to operate and manage the Maverik Center Project on behalf of the City. The City receives all revenues from the operation of the Maverik Center Project and from those revenues the City pays all expenses resulting from the operation of the Maverik Center Project. Although the City may use the revenues it receives from the operation of the Maverik Center Project and from the payments by the Hockey Club under the License Agreement to pay Base Rentals, such revenues are <u>not</u> pledged to secure the payment of the Series 2016 Bonds. The obligations of the City under the Master Lease are not conditioned upon performance by the Hockey Club or the Manager under the License Agreement and the Management Agreement, respectively.

The Maverik Center Project has served and will continue to serve as the home of the Hockey Club, an East Coast Hockey League franchise. The Maverik Center Project served as the primary venue for men's and women's hockey during the 2002 Olympic Winter Games. The Maverik Center Project also serves as the venue for basketball tournaments, including the State Championships for the larger classifications. Other events hosted at the Maverik Center Project include concerts, ice shows, professional wrestling exhibitions, motocross, conventions and other special events.

The City undertook the Maverik Center Project to spur economic development, enhance the City's image, serve as a source of civic pride and provide recreational and entertainment opportunities for its residents. Since the completion of construction of the Maverik Center Project, a variety of businesses including hotels, restaurants and movie theatres, have located around the Maverik Center Project thereby helping the City realize its objectives in undertaking the Maverik Center Project.

Co-Tenancy of the Maverik Center Project. As previously stated herein, the City owns a 21% undivided interest in the Maverik Center Project. The Authority possesses the remaining 79% undivided interest in the Maverik Center Project which it will lease to the City pursuant to the Master Lease. The City's Ownership Interest and the Authority's Ownership Interest in the Maverik Center Project will be administered pursuant to the Co-Tenancy Agreement.

[Use of Maverik Center Project by the Hockey Club and the Manager. Pursuant to a Subordination, Attornment, and Nondisturbance Agreement dated as of June 1, 2002 (the "Maverik Center Subordination Agreement") by and among the Hockey Club, the Authority, the City, the Trustee, the Hockey Club and the Manager acknowledge and agree that the Master Lease and the lien and the charge of the Bonds and the Security Documents (as hereinafter defined) are prior and superior to the License Agreement and the Management Agreement, and the Hockey Club and the Manager specifically and unconditionally subordinate the License Agreement and the Management Agreement to the Master Lease and the lien and the charge of the Bonds and the Security Documents. In consideration of the Hockey Club's and the Manager's subordination under the Maverik Center Subordination Agreement, the Authority, the City and the Trustee grant the Hockey Club continued undisturbed occupancy of the Maverik Center Project under the terms of the License Agreement. For more complete information with respect to the Indenture and the Master Lease, see "SECURITY FOR THE BONDS—The Master Lease and the Indenture" herein. Certain provisions of the Indenture, the Master Lease and the Security Documents are contained in "APPENDIX B—EXTRACTS OF CERTAIN PROVISIONS OF THE PRINCIPAL DOCUMENTS."]

[Pursuant to the License Agreement, the City has granted the Hockey Club an exclusive license to enter and use the Maverik Center Project for the purpose of playing professional hockey. The term of the License Agreement expires on June 30, 2027, unless earlier terminated pursuant to the terms of the License Agreement. The occurrence of certain events will constitute a breach under the License Agreement which will permit the non-breaching party to pursue certain remedies including termination of the License Agreement.]

[In connection with the execution of the License Agreement, the Manager, an affiliate of the Hockey Club, has executed the Management Agreement. Pursuant to the Management Agreement, the City has engaged the Manager to operate, manage, and maintain the Maverik Center Project. The term of the Management Agreement expires on June 30, 2017, unless earlier terminated in accordance with the provisions of the Management Agreement. The occurrence of certain events will constitute a breach under the Management Agreement which will permit the non-breaching party to pursue certain remedies including termination of the Management Agreement.]

[The Authority maintains a capital repair and replacement fund for the purpose of paying the costs of extraordinary repairs or maintenance to the Maverik Center Project. The City deposits [$200,000] per annum in such fund and the amount on deposit in such fund on June 30, 20___ was $_____. Moneys in such fund cannot be used by the Authority to secure its payment obligations with respect to the Series 2016 Bonds.

Fire Station Projects

The Fire Station Projects consist of (i) the construction of a new fire station and related improvements and acquisition of equipment and (ii) the remodeling of an existing fire station and related improvements and acquisition of equipment. [Construction of the Fire Station Projects is scheduled to begin on _____ and to be completed on _____.]

THE AUTHORITY

Establishment

On February 4, 1981, the City Commission of the City (predecessor to the City Council) enacted Resolution No. 81-08 which provided for the creation of the Authority. The Authority was incorporated on February 25, 1981, as a non-profit corporation under the provisions of the Utah Revised Nonprofit Corporation Act, Title 16, Chapter 6a, Utah Code Annotated 1953, as amended (previously codified as the Utah Nonprofit Corporation and Co-operative Association Act, Title 16, Chapter 6, Article 2, Utah Code Annotated 1953, as amended) and the Utah Municipal Building Authority Act, Title 17A, Chapter 3, Part 9, Utah Code Annotated 1953,

as amended (the "Building Authority Act"). On April 6, 1989, the Authority and the City Council approved amendments to the Articles of Incorporation in accordance with Utah law.

The Authority is to be of perpetual duration as set forth in its Articles of Incorporation. The Authority has no full-time employees or other personnel other than its Board of Trustees. The Authority has no property, money or other assets, except for those which are to be acquired with the proceeds of, and pledged to the payment of, its bonds. The principal place of business and office of the Authority is located at 3600 Constitution Boulevard, West Valley City, Utah.

Corporate Powers

The Authority has been incorporated for the purpose of acquiring, improving or extending one or more "projects" (as defined in the Building Authority Act) and financing their costs on behalf of the City in accordance with the procedures and subject to the limitations of the Building Authority Act, in order to accomplish the public purposes for which the City exists.

The Authority has all of the powers provided for in the Building Authority Act and in the Constitution and other laws of the State of Utah. The Authority may not, however, undertake any of the activities provided for in its Articles of Incorporation without prior authorization therefor by the City Council. The Authority has been organized as a non-profit corporation and its Articles of Incorporation expressly require that it remain a nonprofit corporation.

The Authority may not be dissolved unless all of its outstanding bonds and other obligations are paid in full as to principal, interest and redemption premiums, if any, or unless provisions for the payment of the same when due has been made. Whenever bonds, notes or other evidences of indebtedness issued by the Authority are satisfied, discharged and retired, title to all real and personal property financed with the proceeds of such bonds, notes or other evidences of indebtedness is required to be forthwith transferred to the City.

Statutory Powers

Under the Building Authority Act, the Authority has the power to: (i) acquire one or more projects, which, by definition, means that it may obtain or gain property of every kind or nature which a public body is authorized or permitted by law to own, possess or hold or which has or may come into its possession or ownership by any lawful means, including, but not limited to purchase, lease, rental, sale, contract, exchange, devise, bequest, gift, condemnation, donation, construction or operation of law, and it may otherwise improve or extend such a project or projects and finance their costs on behalf of the public body which created the Authority in order to accomplish the public purposes for which the public body exists; (ii) enter into leasing contracts with the City with respect to projects which the Authority has acquired, improved or extended or will acquire, improve or extend on behalf of the City; (iii) issue and sell its bonds for the purpose of paying the cost of acquiring, improving or extending a project; and (iv) perform such other acts as enumerated in the Act; all in accordance with and subject to the specific requirements of the Building Authority Act with respect to such powers.

Organization

According to the By-Laws of the Authority, the affairs of the Authority are managed by a Board of Trustees (the "Board"). The Board consists of the seven members (the "Boardmembers") of the City Council (including the Mayor) as may from time to time serve. Each Boardmember serves on the Board until death, incapacity or removal from the City Council. Whenever a member of the City Council ceases to be a member of the City Council, such member's successor, upon election and qualifying for office, thereupon becomes a member of the Board.

The By-laws further provide for election of officers by the Board. The current members of the Board and the officers are set forth at the front of this Official Statement. For additional information regarding the Boardmembers and the officers, see "WEST VALLEY CITY—Mayor and Councilmembers" herein.

WEST VALLEY CITY

General Information

The City is Utah's second most populous city and is nestled in the Salt Lake Valley between the Wasatch and Oquirrh mountain ranges and adjoins and is located southwest of Salt Lake City. It is five minutes from the Salt Lake City International Airport, and is easily accessible from two major freeways. In 2014, the City had an estimated population of approximately 134,495 residents and is classified under State law as a city of the first class.

Form of Government

The City has a Council-Manager form of government in which the government of the City is vested in the City Council, which is the governing body of the City, and a manager appointed by the City Council. The City Council consists of seven members, including the Mayor. The City is divided into four representative districts of substantially equal population. The City Council is comprised of one Councilmember from each of the four representative districts and two Councilmembers and a Mayor elected at large. Councilmembers serve four-year terms that are staggered to provide continuity.

The City Council is charged with the responsibility of performing the legislative functions of the City. The City Council performs three primary functions: it passes laws, adopts the City budget, and provides administrative oversight by conducting management and operational audits of City departments.

Mayor and Councilmembers

Office	Person	Years of Service	Expiration Of Current Term
Mayor	Ron Bigelow		January 20___
Councilmember At-Large	Don Christensen		January 20___
Councilmember At-Large	Lars Nordfelt		January 20___
Councilmember District #1	Tom Huynh		January 20___
Councilmember District #2	Steve Buhler		January 20___
Councilmember District #3	Karen Lang		January 20___
Councilmember District #4	Steve Vincent		January 20___

City Administration

Person	Office	Years of Service	Term Expiration
Wayne T. Pyle	City Manager		N/A
Paul Issac	Assistant City Manager		N/A
Nicole Cottle	[Assistant City Manager]		N/A
J. Eric Bunderson	City Attorney		N/A
Nichole Camac	City Recorder		N/A
James D. Welch	Finance Director		N/A

Employee Workforce and Retirement System

The City currently employs approximately [_____] full-time employees and approximately [_____] part-time and [_____] temporary employees for a total employment of approximately [_____] employees. The City participates in five cost-sharing multiple-employer public employee retirement systems, all of which are defined benefit retirement plans covering public employees of the State of Utah and employees of participating local governmental entities. The systems are administered under the direction of the Utah State Retirement Board whose

members are appointed by the Governor of Utah. See "APPENDIX A—AUDITED GENERAL PURPOSE FINANCIAL STATEMENTS OF WEST VALLEY CITY FOR FISCAL YEAR ENDED JUNE 30, 2015."

Budget and Appropriation Process

The budget and appropriation process of the City is governed by the Uniform Fiscal Procedures Act for Utah Cities, Title 10, Chapter 6, Utah Code Annotated 1953, as amended (the "Fiscal Procedures Act"). Pursuant to the Fiscal Procedures Act, the budget officer of the City is required to prepare budgets for the general fund, special revenue funds, debt service funds and capital improvement funds. These budgets are to provide a complete financial plan for the budget (ensuing fiscal) year. Each budget is required to specify, in tabular form, estimates of anticipated revenues and appropriations for expenditures. Under the Fiscal Procedures Act, the total of anticipated revenues must equal the total of appropriated expenditures.

Each year the Mayor, the City Council, and City management, meet to update the City's strategic plan. This meeting provides for direction to be given from the City Council to the City management and establishes goals for achievement. Each department sets its goals and budget consistent with the provisions of the City's strategic plan. Revenues and expenditures are projected and then the process of balancing the expenditures with revenue begins.

On or before the first regular meeting of the City Council in May of each year, the City Manager is required to submit to the City Council tentative budgets (as prepared by the budget officer as described above) for all funds for the fiscal year commencing July 1. Various actual and estimated budget data are required to be set forth in the tentative budgets. The City Manager may revise the budget requests submitted by the heads of the City departments, but must file these submissions with the City Council together with the tentative budget. The City Manager is required to estimate in the tentative budget the revenue from non-property tax sources available for each fund and the revenue from general property taxes required by each fund. The tentative budget is then tentatively adopted by the City Council, with any amendments or revisions that the City Council deems advisable prior to the public hearings on the tentative budget. After public notice and hearing, the tentative budget is adopted by the City Council, subject to further amendment or revisions by the City Council prior to adoption of the final budget.

With the exception of executive sessions, all City Council meetings and study sessions are open to the public and every citizen has access to four of the seven councilmembers: the Mayor, the two Councilmembers at large, and their own district councilmember. By following established procedures, each citizen can address issues of importance to them and participate in public hearings.

Prior to June 22 in each year, the final budgets for all funds are adopted by the City Council, unless the City is required to satisfy certain notice and hearing provisions of State law in connection with an increase in the City's ad valorem property tax revenues, in which case the final budgets must be adopted prior to August 17 or such later date as may be approved by the State Tax Commission. The Fiscal Procedures Act prohibits the City Council from making any appropriation in the final budget of any fund in excess of the estimated expendable revenue of such fund. The adopted final budget is subject to amendment by the City Council during the fiscal year. However, in order to increase the budget total of any fund, public notice and hearing must be provided. Intra- and inter-department transfers of appropriation balances are permitted upon compliance with the Fiscal Procedures Act.

The amount set forth in the final budget as the total amount of estimated revenue from property taxes constitutes the basis for determining the property tax levy to be set by the City Council for the succeeding tax year. See "FINANCIAL INFORMATION REGARDING THE CITY" for a description of certain matters relating to the City's ability to levy and collect general property taxes and the procedure applicable to such levy and collection.

The City has established a special revenue fund known as the "Municipal Building Authority Fund" to account for the operations of the Authority in connection with its revenues and expenditures. The assets and liabilities of the Authority are reflected in the account groups on the City's financial statements. Within the Building Authority Fund are separate accounts that relate to the particular property or project leased from the Authority. Appropriated moneys are set aside monthly in the various accounts in the Municipal Building Authority Fund and are dedicated and used solely for the payment of principal and interest on the obligations that were issued

to finance such property or projects. Those moneys are then transferred as needed into the respective debt service funds to timely pay the principal of and interest on the obligations of the Authority.

Investment of Funds

Investment of Operating Funds; The Utah Money Management Act. The Utah Money Management Act, Title 51, Chapter 7, Utah Code Annotated 1953, as amended (the "Money Management Act"), governs the investment of all public funds held by public treasurers in the State of Utah (the "State"). It establishes criteria for investment of public funds with an emphasis on safety, liquidity, yield, matching strategy to fund objectives, and matching the term of investments to the availability of funds. The Money Management Act provides a limited list of approved investments including qualified in-state and permitted out-of-state financial institutions, approved government agency securities and investments in corporate securities carrying "top credit ratings." The Money Management Act also provides for pre-qualification of broker dealers by requiring that broker dealers agree in writing to comply with the Money Management Act and certify that they have read and understand the Money Management Act. The Money Management Act establishes the Money Management Council (the "Money Management Council") to exercise oversight of public deposits and investments. The law requires all securities to be delivered versus payment to the public treasurer's safekeeping bank. It requires diversification of investments, especially in securities of corporate issuers. Not more than 5% of the portfolio may be invested with any one issuer. Investments in mortgage pools and mortgage derivatives or any security making unscheduled periodic principal payments are prohibited. The Money Management Act also defines the State's prudent investor rules. The Money Management Council is comprised of five members appointed by the Governor of the State for terms of four years, after consultation with the State Treasurer and with the advice and consent of the State Senate.

The City is currently complying with all of the provisions of the Money Management Act for all City operating funds. The City has no investments in derivative or leveraged securities. [A significant portion of City funds are invested in the Utah Public Treasurers' Investment Fund (the "Utah Treasurers' Fund"), as discussed below.]

The Utah Public Treasurers' Investment Fund. The Utah Treasurers' Fund is a public treasurers' investment fund, established in 1981, and is managed by the Treasurer of the State of Utah. The Utah Treasurers' Fund invests to ensure safety of principal, liquidity and a competitive rate of return on short-term investments. All moneys transferred to the Utah Treasurers' Fund are promptly invested in securities authorized by the Money Management Act. Safe-keeping and audit controls for all investments owned by the Utah Treasurers' Fund must comply with the Money Management Act.

All investments in the Utah Treasurers' Fund must comply with the Money Management Act and rules of the Money Management Council. The Utah Treasurers' Fund invests primarily in money market securities including time certificates of deposit, top rated commercial paper, treasuries and certain agencies of the U.S. Government. The maximum weighted average adjusted life of the portfolio, by policy, is not to exceed 90 days. The maximum final maturity of any security purchased by the Utah Treasurers' Fund is limited to three years, except for a maximum maturity of five years is allowed for treasury or agency securities whose rate adjusts at least annually.

By law, investment transactions are conducted only through certified dealers, qualified depositories or directly with issuers of the securities. All securities purchased are delivered via payment to the custody of the State Treasurer or the State Treasurer's safekeeping bank, assuring a perfected interest in the securities. Securities owned by the Utah Treasurers' Fund are completely segregated from securities owned by the State. The State has no claim on assets owned by the Utah Treasurers' Fund except for any investment of State moneys in the Utah Treasurers' Fund. Deposits are not insured or otherwise guaranteed by the State.

Securities in the Utah Treasurers' Fund include certificates of deposit, commercial paper, short-term corporate notes, obligations of the U.S. Treasury and securities of certain agencies of the U.S. Government. These short-term securities must be rated "first tier" ("A-1," "P1," for short-term investments and "A" or better for long-term investments) by two nationally recognized statistical rating organizations, one of which must be Moody's Investors Service, Inc. or Standard & Poor's Ratings Group, a division of The McGraw-Hill Companies, Inc. These securities represent limited risks to governmental institutions investing with the Utah Treasurers' Fund. Variable

rate securities in the Utah Treasurers' Fund must have an index or rate formula that has a correlation of at least 94% of the effective Federal Funds rate.

Investment activity of the State Treasurer in the management of the Utah Treasurers' Fund is reviewed monthly by the Money Management Council and is audited by the State Auditor.

See "APPENDIX A—GENERAL PURPOSE FINANCIAL STATEMENTS FOR THE FISCAL YEAR ENDED JUNE 30, 2015—Notes to Financial Statements—Note 2. Cash and Investments."

Moneys from the sale of obligations issued by the City or pledged to the payment therefor are also on deposit in funds and accounts of the City. Investment policies regarding such moneys are governed by the specific instruments pursuant to which such obligations were issued.

Additional Information

For additional information with respect to the City and its finances see "FINANCIAL INFORMATION REGARDING THE CITY," "DEBT STRUCTURE OF THE AUTHORITY AND THE CITY," "APPENDIX A—AUDITED GENERAL PURPOSE FINANCIAL STATEMENTS OF WEST VALLEY CITY FOR FISCAL YEAR ENDED JUNE 30, 2015" and "APPENDIX C—STATISTICAL AND GENERAL INFORMATION REGARDING WEST VALLEY CITY."

DEBT STRUCTURE OF THE AUTHORITY AND THE CITY

Authority Obligations

The Authority has issued other obligations in addition to the Series 2016 Bonds to finance a variety of projects within the City (the "Additional Authority Obligations"). The Additional Authority Obligations are payable from amounts annually appropriated by the City from legally available funds. Such Additional Authority Obligations are not secured by the lien of the Indenture or the Security Documents nor are the Series 2016 Bonds secured by the documents pursuant to which such Additional Authority Obligations were issued. The following table sets forth a summary of obligations issued by the Authority (including the Series 2016 Bonds and the Additional Authority Obligations), the amount outstanding as of [July 1, 2016], and the purpose for such obligations.

OUTSTANDING LEASE REVENUE BONDS UNDER THE INDENTURE

Series	Purpose	Original Amount	Final Maturity Date	Balance Outstanding as of July 1, 2016
2006A[(1)]	Refunding	$29,275,000	[August 1, 2027]	
2006B[(1)]	Refunding	6,510,000	[August 1, 2017]	
2016[(1)]	Refunding & Fire Stations	_____*	[August 1, 20___]	
Total				

(1) Assumes that the Series 2016 Bonds are issued and outstanding and the Refunded Bonds have been refunded.

ADDITIONAL AUTHORITY OBLIGATIONS

Series	Purpose	Original Amount	Final Maturity Date	Balance Outstanding as of July 1, 2016
1998A	Refunding Fitness Center	$22,740,000	April 15, 2019	
2010	Refunding	2,870,000	January 15, 2020	1,210,000
Total				

City Obligations

OUTSTANDING SALES TAX REVENUE BONDS[(1) (2)]

Series/Year	Purpose	Original Amount	Final Maturity Date	Balance Outstanding as of July 1, 2016
2006	Refunding	$13,905,000	July 15, 2021	
2009	Pledge Agreement	13,735,000	May 1, 2026	
2010	Refunding	14,466,760	July 15, 2035	
2013A	Refunding	5,880,000	July 15, 2023	

(1) The City has a contingent liability in connection with its participation in the Utah Telecommunications Open Infrastructure Agency. That contingent liability is payable from a subordinate pledge of the sales tax revenues received by the City. See "APPENDIX A—AUDITED BASIC FINANCIAL STATEMENTS OF WEST VALLEY CITY, UTAH FOR THE FISCAL YEAR ENDED JUNE 30, 2015—Notes to the Financial Statements—Note [____]. Interlocal Agreement" herein.

(2) The City also has a contingent liability from a subordinate pledge of its sales and use tax revenues in connection with the City's RDA Series 2012 Bonds.

OUTSTANDING FRANCHISE TAX REVENUE OBLIGATIONS[(1)]

Series	Purpose	Original Amount	Final Maturity Date	Balance Outstanding as of July 1, 2016
2009	Refunding	$13,735,000	April 15, 2020	$10,500,000

(1) The City has a contingent liability in connection with its participation in the Utah Infrastructure Agency (the "UIA Obligation"). The UIA Obligation is payable from franchise tax revenues received by the City. The maximum annual amount of the UIA Obligation is $1,569,781. The City has also pledged its franchise tax revenues to secure the Redevelopment Agency of West Valley City, Utah Tax Increment and Franchise Tax Revenue Bonds, Series 2010.

OUTSTANDING TAX INCREMENT BONDS

Series Purpose	Original Amount	Final Maturity Date	Balance Outstanding as of July 1, 2016
2005 Refunding Curb, Gutter, Paving, Landscaping for Maverik Center	$6,185,000	March 1, 2021	

Future Financing Plans

[The City from time to time will pursue various financings in order to satisfy the needs of its citizens. Such financings include new money issues as well as refunding issues. The City, through its Redevelopment Agency, is contemplating issuing a series of tax increment revenue bonds in the approximate amount of $_____ to finance certain improvements to _____. The City anticipates that it will issue the tax increment bonds within the current calendar year. The redevelopment financing is the only new money issue the City is planning to undertake at this time.]

Investment Policy

As stated above, the Authority has no money or assets except for those which result from the sale or pledged to the payment of its bonds. Investment policies regarding such moneys and assets are governed by the specific instruments pursuant to which such bonds were issued.

No Defaulted Bonds or Failure to Renew Lease

Neither the Authority nor the City has ever failed to pay principal and interest when due on their respective outstanding bonded indebtedness or other obligations nor has the City ever failed to appropriate amounts due under its lease obligations.

Debt Authorization And Limit

Pursuant to the provisions of Article XIV, Section 3, of the Utah Constitution, the City may incur general obligation indebtedness only upon the approval of a majority of the qualified electors within the City voting on a proposition to incur such indebtedness.

Pursuant to the provisions of Article XIV, Section 4 of the Utah Constitution and applicable statutory provisions, the general obligation indebtedness of a city of the first class, such as the City, incurred for general purposes is limited to an amount not exceeding four percent (4%) of the value of taxable property in the City as shown in the last assessment for City purposes. The City may incur an additional amount of general obligation indebtedness, not exceeding four percent (4%) of the value of taxable property in the City, for water, sewer or electric purposes. Based upon the City's 2015 estimated fair market value of property of $_____, the general obligation debt limits of the City are shown below:

	General (4%)	Water, Sewer and Electric (4%)	Total (8%)
Debt Limit			
Less Outstanding General Obligation Bonds			
Debt Margin			

Outstanding General Obligation Bonds

The City has no general obligation bonds outstanding.

Computation Of Direct and Overlapping Debt (For the fiscal year ended June 30, 2015)

Name of Governmental Unit	Net Debt Outstanding	Percentage Applicable to the City	City's Share of Debt
Salt Lake County			
Granite School District			
Granger Hunter Imp. District			
Magna Water Company			
Taylorsville-Bennion Imp. Dist.			
Kearns Improvement Dist.			
TOTAL:			

(Source: West Valley City Finance Department.)

Debt Ratios

The State of Utah general obligation debt is not included in the debt ratios because the State of Utah currently levies no property tax for payment of general obligation bonds.

	To 2015 Taxable Value[1]	To Estimated Fair Market Value[2]	Per Capita[3]
Direct General Obligation Debt	–	–	–
Direct and Overlapping General Obligation Debt			

(1) Based on the City's total 2015 taxable value of $_____.
(2) Based on the estimated 2015 fair market value of $_____.
(3) Based on 2014 population of _____.

(Remainder of this page intentionally left blank.)

FINANCIAL INFORMATION REGARDING THE CITY

Sources of General Fund Revenues

Set forth below are brief descriptions of the various sources of revenues available to the City's general fund. The percentage of total general fund revenues represented by each source is based on the City's 2015 fiscal year. See the tables that follow and "APPENDIX A" hereto.

Property – Approximately _____% of general fund revenues are from property taxes which are assessed and collected by Salt Lake County and the State of Utah.

Sales Taxes – Approximately _____% of general fund revenues are from sales taxes which are assessed and collected by Salt Lake County and the State of Utah.

License permits and fees – Licenses, permits, fees and passes amount to approximately _____% of general fund revenues.

Intergovernmental – Approximately _____% of general fund revenues is received from federal, state or county governments.

Fines and forfeitures – Approximately _____% of general fund revenues are collected from parking tickets and from fines and forfeitures.

Charges for services – Charges for services amount to approximately _____% of general fund revenues.

Interest – Interest on surplus cash amounts to approximately _____% of general fund revenues.

Other – Approximately _____% of general fund revenues are received from assessments, other charges for services, or from other miscellaneous revenues.

Five Year Financial Summary

The following tables set forth a summary of certain financial information regarding the City and have been extracted from the City's audited general purpose financial statements for the fiscal years ended June 30, 2011 through June 30, 2015. This summary itself is unaudited.

(Remainder of this page intentionally left blank.)

WEST VALLEY CITY
Statement of Net Position—Governmental Activities

(This summary is unaudited.)

	Fiscal Year Ended June 30,				
	2015	2014	2013	2012	2011
Assets:					
Cash and Cash Equivalents				$32,075,372	$25,263,106
Receivables:					
Accounts, Net				1,138,465	2,524,509
Taxes				34,954,833	32,883,779
Intergovernmental				5,555,750	4,375,577
Internal Balances				–	650,775
Loans Receivable				583,615	540,795
Inventories				62,966	378,322
Prepaids				548,499	16,364
Deferred Charges				–	2,296,440
Note Receivable				–	3,509,763
Restricted Assets:					
Cash and Cash Equivalents				35,428,863	16,398,458
Intergovernmental Receivable				727,473	703,641
Land Held for Resale				5,520,045	16,139,823
Capital Assets Not Being Depreciated:					
Land and Collectibles				19,001,364	17,750,049
Infrastructure				212,514,330	207,590,582
Construction in Progress				17,697,819	–
Intangible assets				599,672	599,672
Capital Assets Net of Accumulated Depreciation:					
Buildings				81,555,728	84,656,684
Improvements other than buildings				3,566,153	1,896,563
Machinery and Equipment				5,132,526	6,061,707
Furniture and Equipment				49,657	53,826
Infrastructure				40,443,572	39,220,778
Other Assets				–	–
Total Assets				497,156,702	463,511,213
Deferred Outflows of Resources[1]					
Deferred costs of issuance on bonds				5,604,204	–
Deferred charge on refunding				2,400,655	–
Total Deferred Outflows of Resources				8,004,859	–
Total Assets and Deferred Outflows of Resources				$505,161,561	$463,511,213

Continued on next page . . .

WEST VALLEY CITY
Statement of Net Position—Governmental Activities
(This summary is unaudited.)

Continued . . .

	Fiscal Year Ended June 30,				
	2015	2014	2013	2012	2011
Liabilities:					
Accounts Payable				$3,583,840	$1,998,508
Accrued Liabilities				4,300,236	7,272,753
Accrued Interest Payable				2,921,442	2,000,983
Developer and Customer Deposits				653,911	705,329
Liabilities Payable from Restricted Assets				1,029,360	812,704
Unearned (Deferred) Revenue				34,119,711	31,946,832
Noncurrent Liabilities:					
Debt Due Within One Year				9,345,913	7,810,865
Debt Due in More Than One Year				140,702,989	110,328,849
Total Liabilities				196,657,402	162,876,823
Net Assets:					
Invested in Capital Assets, Net of Related Debt				269,544,925	257,398,887
Restricted for:					
Debt Service				9,315,133	10,344,351
Future Development				25,811,844	5,015,002
Other				–	929,841
Unrestricted				3,832,257	26,946,309
Total Net Assets				308,504,159	300,634,390
Total Liabilities and Net Assets				$505,161,561	$463,511,213

(Source: Extracted from the City's audited general purpose financial statements for the fiscal years June 30, 2011 through June 30, 2015. This summary itself is unaudited.)

WEST VALLEY CITY

Statement of Revenues, Expenditures and Changes in Fund Balance — General Fund

(This summary is unaudited.)

	Fiscal Year Ended June 30,				
	2015	2014	2013	2012	2011
Revenues:					
Taxes				$55,247,916	$48,501,745
Licenses and Permits				3,578,244	3,232,263
Intergovernmental				3,919,823	3,882,808
Fines and Forfeitures				4,197,709	4,593,320
Charges for Services				681,222	662,469
Interest				511,512	511,143
Special Improvement Districts/Special Assessments				360,482	232,202
Miscellaneous				1,235,551	998,607
Total Revenues				69,732,459	62,614,557
Expenditures:					
Current:					
General Government				12,136,066	12,134,997
Public Safety				28,115,335	27,882,690
Highways and Public Improvements				7,360,504	7,054,885
Parks and Recreation				1,779,601	1,607,093
Community Development				3,141,094	3,125,413
Other Nondepartmental				2,946,813	(450,795)
Debt Service:					
Principal				2,863,826	3,764,091
Interest				1,194,635	1,596,277
Bond Issuance Costs				30,872	394,819
Capital outlay				203,920	302,409
Total Expenditures				59,772,666	57,411,879
Excess (Deficiency) of Revenues Over (Under) Expenditures				9,959,793	5,202,678
Other Financing Sources (Uses):					
Proceeds from Issuance of Bonds, Notes, and Warrants				–	14,466,760
Premium on Refunding Bonds				–	–
Payment to Refunded Bond Escrow Agent				–	(12,946,735)
Proceeds from Capital Leases				239,502	317,955
Operating Transfers In				1,692,811	2,619,423
Operating Transfers Out				(12,882,082)	(8,704,868)
Sale of Capital Assets				4,626,271	2,210,500
Total Other Financing Sources (Uses)				(6,323,498)	(2,036,965)
Net Change in Fund Balance				3,636,295	3,165,713
Fund Balance, Beginning of Year				20,767,670	15,958,104
Prior Period Adjustment				–	1,643,853
Fund Balance, End of Year				$24,403,965	$20,767,670

(Source: Extracted from the City's audited general purpose financial statements for the fiscal years June 30, 2011 through June 30, 2015. This summary itself is unaudited.)

General Governmental Expenditures

The following table sets forth information with regard to the general governmental expenditures for the City for each of the last ten fiscal years:

Fiscal year ended June 30,	General Government	Public Safety	Highway and Public Improvements	Parks, Recreation and Public Property	Community Development Block Grant	Other Intergovern-mental Grants	Debt Service	Capital Outlay[1]	Total

[1] Includes projects financed with proceeds of bond issues.
(Note: Includes General, Special Revenue, Capital Improvement Funds.)
(Source: West Valley City Finance Department.)

All Government Revenues by Source

The following table sets forth information with regard to the general governmental revenues for the City for each of the last ten fiscal years.

Fiscal year ended June 30,	Taxes	Licenses Permits Fees & Passes	Inter-governmental	Fines and Forfeitures	Charges for Services	Interest	Other	Total

(Note: Includes All Governmental Fund Types.)
(Source: West Valley City Finance Department.)

General Governmental Tax Revenues by Source[1]

Fiscal Year ended June 30,	General Property Taxes	General Sales and Use Taxes	Franchise Taxes	Total Tax Revenues

[1] Note: Includes General and Redevelopment Fund Taxes.
(Source: West Valley City Finance Department.)

Sales and Use Tax

The State of Utah currently imposes a tax of 4.75% on the sale or use of tangible personal property ("Property") and on the sale or use of certain taxable services. Recently, the legislature enacted new legislation effective January 1, 2007 reducing the state sales tax on food and food ingredients from 4.75% to 2.75%. For power and fuel for residential use, the State of Utah currently imposes a tax rate of 2.00%. Sales tax is imposed on the amount paid or charged for sales of Property in Utah and for services rendered in Utah for the repair, renovation or installation of Property. Use tax is imposed on the amount paid or charged for the use, storage or other consumption of Property in Utah, including services for the repair, renovation or installation of such Property. Sales and use taxes also apply to leases and rentals of Property if the Property is in Utah, the lessee takes possession in Utah or the property is stored, used or otherwise consumed in Utah.

In addition to state sales and use tax, counties, cities and towns have the authority to impose a local sales and use tax of up to 1.0% of the purchase price of goods or services. The City has adopted a tax ordinance imposing local sales and use taxes of 1.0% upon all retail sales within its borders.

In addition to the sales and use taxes described above, the counties and cities in Utah are authorized to impose sales and use taxes to fund a public transportation and other public purposes. Salt Lake County imposes various sales taxes totaling 0.80% to support public transportation. Salt Lake County also imposes a 0.10% sales tax for support of recreational facilities and qualifying botanical, cultural, and zoological organizations and a countywide sales tax of 0.25%. The general sales and use tax imposed in the City is currently 6.85%.

Local sales and use taxes are collected by the State Tax Commission and remitted on a monthly basis to local municipalities. The distribution formula is based 50% on population and 50% on point of sale or use of the transaction. Notwithstanding these distribution formulas, no county, city or town that has imposed a local sales and use tax shall receive a tax revenue distribution less than 0.75% of the taxable sales within its boundaries.]

Utility Franchise Taxes and Fees

Under Utah law, municipalities have the authority to impose a tax, license, fee, license fee, license tax, energy sales and use tax or similar charge at a rate not exceeding 6% of gross revenues of public utilities collected within the boundaries of the municipality (or, in the case of gas and electric service providers, not exceeding 6% of the "delivered value" of "taxable energy"). Utilities upon which these taxes and fees may be levied include

telephone, natural gas, electric energy service companies and city public utilities. Utility franchise taxes and fees are collected by the utility and remitted on a monthly basis to the local government. Energy sales and use taxes are, in certain circumstances, remitted by the energy service provider to the State Tax Commission and then to the municipality.

[The City also charges a one dollar a month fee on all cell phone bills within the City.]

Certain Property Tax Matters

The following information with respect to certain property tax matters is included in this Official Statement to provide background information relating to a major source of general fund revenues of the City. As described herein, the Series 2016 Bonds are not secured by any pledge of property tax revenues and do not constitute a debt or indebtedness of the City or the Authority. See "RISKS FACTORS" below.

The Property Tax Act, Title 59, Chapter 2, Utah Code Annotated 1953, as amended (the "Property Tax Act"), provides that all taxable property within the taxing entity is required to be assessed and taxed at a uniform and equal rate on the basis of 100% of its "fair market value" as of January 1 of each year, unless otherwise provided by law. "Fair market value" is defined in the Property Tax Act as "the amount at which property would change hands between a willing buyer and a willing seller, neither being under any compulsion to buy or sell and both having reasonable knowledge of the relevant facts." Determinations of "fair market value" shall take into account the current zoning laws applicable to the property in question. Section 2 of Article XIII of the Utah Constitution provides that the Utah Legislature may by law exempt from taxation up to 45% of the fair market value of residential property as defined by law. Pursuant to this provision, the Utah Legislature has provided that the "fair market value" of primary residential property shall be reduced by 45% for tax years 1995 and thereafter. No more than one acre of land per residential unit may qualify for the residential exemption.

The Property Tax Act provides that the State Tax Commission shall assess certain types of property ("centrally assessed property"), including (i) properties that operate as a unit across county lines that must be apportioned among more than one county or state, (ii) public utility (including railroad) properties, (iii) airline operating properties, (iv) geothermal properties and (v) mines, mining claims and appurtenant machinery, furnishings and improvements, including oil and gas properties. All other taxable property ("locally assessed property") is required to be assessed by the county assessor of the county in which such locally assessed property is located. Each county assessor must update property values annually based upon a systematic review of current market data. Each county assessor must also complete a detailed review of property characteristics for each parcel of property at least once every five years. The Property Tax Act requires that the State Tax Commission conduct an annual investigation in each county to determine whether all property subject to taxation is on the assessment rolls and whether the property is being assessed at its "fair market value."

The State Tax Commission and the county assessors utilize various valuation methods, as determined by statute, administrative regulation or accepted practice, to determine the "fair market value" of taxable property.

Many areas within the State have agricultural farmland devoted to the raising of useful plants and animals. For general property tax purposes, agricultural land is assessed based on statutory requirements and the value which the land has for agricultural use or on its agricultural value.

Uniform Fees

An annual statewide uniform fee is levied on tangible personal property in lieu of the ad valorem tax, which uniform fee is based on the value of motor vehicles, watercraft, recreational vehicles, and all other tangible personal property required to be registered with the State (the "Uniform Fee" or "Uniform Fees"). Prior to 1999, the Uniform Fee was established at 1.5% of the fair market value of such property. Beginning in 1999, the Uniform Fee was adjusted to a set fee structure for motor vehicles weighing 12,000 pounds or less based on the model year of the vehicle. The revenues collected in each county from the Uniform Fee are distributed by the county to each taxing entity in which the property is located in the same proportion in which revenue collected from ad valorem property tax is distributed, and each taxing entity is to distribute the revenues in the same proportion in which revenue collected from ad valorem property tax is distributed.

Tax Levy And Collection

The State Tax Commission must assess all centrally-assessed property by May 1 of each year and shall immediately notify the owners or operators of such property, and the county assessors, of such assessment. County assessors must assess all taxable property other than centrally-assessed property before May 22 of each year. Before May 25 the State Tax Commission apportions the value of centrally-assessed property to the various taxing entities within each county and reports such values to county auditors before June 8. The governing body of each taxing entity must adopt a final tax rate before June 22, except as described below for rates in excess of the certified tax rate. County auditors must forward to the State Tax Commission a statement prepared by the governing body of each taxing entity showing the amount and purpose of each levy.

If the State Tax Commission determines that a tax levy established by a taxing entity exceeds the maximum levy permitted by law, the State Tax Commission must lower the levy to the maximum level permitted by law, must notify the taxing entity that the rate has been lowered, and must notify the county auditor of the county in which the taxing entity is located to implement the rate established by the State Tax Commission.

On or before July 22 of each year, the county auditors must mail to all owners of real estate shown on their assessment rolls notice of, among other things, the value of the property, itemized tax information for all taxing entities and the date their respective county boards of equalization will meet to hear complaints. Not later than 30 days following the mailing of the notice, taxpayers owning property assessed by the county assessors may file an application with the appropriate county board of equalization for the purpose of contesting the assessed valuation of their property. The county boards of equalization must render a decision on each appeal no later than October 1 (with extensions requiring State Tax Commission approval). Such decisions may be appealed to the State Tax Commission, which must decide all appeals by March 1 of the following year. Owners of centrally-assessed property, or any county with a showing of reasonable cause, may apply to the State Tax Commission on or before June 1 for a hearing to contest the assessment of centrally-assessed property. The State Tax Commission must render a written decision no later than 120 days following completion of the hearing and submission of all post hearing briefs. The county auditors must make a record of all changes, corrections and orders and, before November 1, must deliver the corrected assessment rolls to their respective county treasurers. By November 1, the county treasurers are to furnish to each taxpayer a notice containing the kind and value of the property assessed to the taxpayer, the street address of the property, where applicable, the amount of the tax levied on the property and the year that the property is subject to a detailed review. Taxes are due November 30, or, if a Saturday, Sunday, or holiday, the next business day following.

Each county treasurer is responsible for collecting all taxes levied on real property within that county. There are no prior claims to such taxes. As taxes are collected, each county treasurer must pay the State and each taxing entity within the county its proportionate share of the taxes, on the tenth day of each month. Delinquent taxes are subject to a penalty of 2% of the amount of the taxes or $10.00, whichever is greater. Unless the delinquent taxes and penalty are paid before January 16 of the following year, the amount of delinquent taxes and penalty bears interest at the federal discount rate in effect on January 1, plus 6% from January 1 until paid. If after four years (March 15 of the fifth year after assessment) delinquent taxes have not been paid, the affected county may advertise and sell the property at a tax sale.

Public Hearing on Certain Tax Increases

Each taxing entity that proposes to levy a tax rate that exceeds the "certified tax rate" may do so, by ordinance, only after holding a public hearing. Notice of the public hearing must be mailed by July 22 to all owners of real estate and, in most cases, must be advertised by publication. Generally, the certified tax rate for a taxing entity is the rate necessary to generate the same property tax revenue that the taxing entity collected for the prior year, exclusive of collections from redemptions, interest and penalties. For purposes of calculating the certified tax rate, county auditors are to use the taxable value of property on the assessment rolls, exclusive of new growth. New growth is any increase in taxable value of the taxing entity from the previous calendar year to the current year, less the amount of increase to locally-assessed real property taxable values resulting from factoring, reappraisal or any other adjustments. After the public hearing is held, the taxing entity may adopt a resolution levying a tax in excess of the certified tax rate. If a resolution levying a tax in excess of the certified tax rate is not forwarded to the county

auditor by August 17, the county auditor must forward the certified tax rate to the State Tax Commission. The final tax notice is then mailed by November 1.

Assessed and Estimated Actual Value of Taxable Property

Fiscal Year Ended June 30,	Assessed Taxable Valuation[1]	Estimated Actual Value[2]	Ratio of Assessed to Estimated Actual Value Percent Increase	% Increase of Estimated Actual Value

(1) Adjusted for RDA and Board of Equalization adjustments. Property Tax Levy establishing using this number from Salt Lake County.
(2) Estimate by West Valley Finance Department based on data from Utah State Tax Commission.
(Source: West Valley City Finance Department.)

Summary Of The City's Taxable Value

	2015 Taxable Value	% of Total Taxable Value
Real Property—Land and Buildings:		
Primary Residential		
Secondary Residential		
Commercial and Industrial		
Farmland Assessment Act		
Unimproved Non Farmland Assessment Act		
Agricultural		
Total Real Property—Land		
Personal Property:		
Primary Mobile Homes		
Secondary Mobile Homes		
Other Business Personal Property		
Total Personal Property		
Age Based Value Estimate (Age based revenue/.015)		
Fee-In-Lieu		
Total of Land, Buildings, Personal		
Total of Land, Buildings, Personal Property, Age Based, Fee-In-Lieu		

* Less than 1%.
(Source: Utah State Tax Commission—Property Tax Division.)

Property Tax Levies And Collections

The following table shows the property tax levies and collections for the City's general fund for the last five calendar years:

Year	Total Tax Levy	Current Taxes Collected	Percent of Current Taxes Collected	Redemption of Prior Years Taxes	Total Taxes Collected	Ratio of Total Tax Collections to Total Tax Levy	Outstanding Delinquent Taxes	Ratio of Delinquent Taxes to Total Tax Levy
2015								
2014								
2013								
2012								
2011								

(Source: Salt Lake County Treasurer's Office.)

(The remainder of this page intentionally left blank)

Property Tax Rates Direct and Overlapping Governments

(Tax Rate Per $1,000 of Assessed Value)

Fiscal Year Ended June 30	West Valley City	Salt Lake County	Granite School District	Granter Hunter Improvement District	Magna Water Company	Magna Mosquito Abatement	Taylorsville Bennion Improvement District	Kearns Improvement District	Central Utah Water Conservancy District	Salt Lake Mosquito Abatement District	Jordan Valley Water Conservancy District	Total

(Source: Salt Lake County Auditor's Office.)

Principal Property Taxpayers For Fiscal Year Ended June 30, 2015

Taxpayer	Business Type	FY 2015 Taxable Market Value[1]	Percentage of Total Assessed Valuation
TOTAL			

Taxable Market Values represent both Real and Personal Property.
(Source: West Valley City Department of Finance.)

RISK FACTORS

THE PURCHASE OF THE SERIES 2016 BONDS BEING OFFERED HEREBY INVOLVES CERTAIN INVESTMENT RISKS THAT ARE DISCUSSED THROUGHOUT THIS OFFICIAL STATEMENT. ACCORDINGLY, EACH PROSPECTIVE PURCHASER OF THE SERIES 2016 BONDS SHOULD MAKE AN INDEPENDENT EVALUATION OF ALL OF THE INFORMATION PRESENTED IN THIS OFFICIAL STATEMENT IN ORDER TO MAKE AN INFORMED INVESTMENT DECISION. CERTAIN OF THESE RISKS ARE DESCRIBED BELOW.

Non-Appropriation

Base Rentals and Additional Rentals (sometimes collectively referred to herein as "Rentals") will be payable solely from City Funds which are annually budgeted and appropriated by the City Council of the City and which may be terminated by action of the City Council. There is no assurance that the Lease will be renewed for all of its anticipated Renewal Terms. The City Council is under no obligation to provide City Funds for such renewals. The City's obligation under the Lease does not constitute a general obligation or other indebtedness of the City or the State of Utah or any agency or political subdivision of the State of Utah within the meaning of any constitutional or statutory debt limitation. THE AUTHORITY HAS NO TAXING POWER.

Accordingly, the likelihood that the City will extend the term of the Lease for all Renewal Terms and continue to pay the Base Rentals to enable the Authority to timely pay the principal of, premium, if any, and interest on the Bonds in the future depends upon a number of factors which are beyond the control of the City, including, but

not limited to, (a) the continuing need of the City for the Projects, (b) the ability to operate the Maverik Center Project in a cost-effective manner, (c) the continuing need of the City for the Leased Property, (d) the composition of the City Council and their respective views with respect to the leasing of the Projects, (e) the economic and demographic conditions within the City, (f) the ability of the City to generate sufficient funds from property taxes and other taxes and other sources of revenue to pay obligations associated with the Lease and other obligations of the City (whether now existing or hereafter created), and (g) the value of the Projects, subject to the nondisturbance rights of the Hockey Club and the Manager under the Subordination Agreement and subject to the terms of the Ground Lease and the City's Ownership Interest if sold or relet (to the extent authorized by the Trustee) in the event of the termination of the term of the Lease as a result of the occurrence of certain events described below or the expiration of any Renewal Term if the City does not appropriate sufficient funds that extends the term of the Lease as provided in the Lease. Neither the Indenture nor the Lease limit the ability of the City to incur additional obligations against its revenues.

The City has covenanted in the Lease to include in its annual tentative budget prepared by the appropriate officials of the City an item for expenditure of an amount necessary (after taking into account any and all City Funds then legally available for such purpose), to pay the Base Rentals and reasonably estimated Additional Rentals during the next succeeding Renewal Term under the Lease. The decision to renew or not to renew the term of the Lease is to be made solely by the City Council at the time it considers for adoption the final budget relating to each Renewal Term and not by any official of the City acting in his or her individual capacity.

In the event the City Council fails to renew the Lease for all contemplated Renewal Terms, fails to budget and appropriate sufficient City Funds for the payment of Base and Additional Rentals or defaults under the Lease, the Lease, which is subject to annual renewal, will be terminated, and, in such event, the Bonds will be payable from any moneys held by the Trustee under the Indenture, and the proceeds, if any, from a liquidation or other disposition of the Projects subsequent to foreclosure of the lien of the Indenture and the Security Documents. In such event, the City has agreed to immediately vacate the Projects.

Changes in Makeup of City Council

The individuals elected to serve on the City Council may change during the period the Bonds are outstanding. There can be no assurance that the membership of the City Council will not change in a manner that will result in a future City Council ceasing to appropriate Rentals under the Lease for the Projects. Under the Lease, the City is entitled not to appropriate Rentals for the next succeeding Renewal Term with respect to all of the components constituting the Projects, but is not entitled to appropriate with respect to only a portion, but not all, of such components constituting the Projects.

Expiration or Termination of Lease

The Lease will expire by its terms on each June 30 during the years 2007 through 2027, unless the City, in its sole discretion exercises the option provided in the Lease to extend the term of the Lease for each next succeeding Renewal Term with a final lease expiration date of August 1, 2027. In the event that the City does not extend in any year the term of the Lease, the City's obligation to pay Rentals will terminate on the June 30 occurring at the end of the then current Renewal Term. Upon (a) the expiration of any Renewal Term of the Lease during which an Event of Nonappropriation occurs or (b) a default under the Lease and an election by the Trustee to terminate the possessory interest of the City under the Lease, the City's rights of possession of the Projects under the Lease will expire or be terminated, as appropriate.

In the event that the City's right of possession of the Projects under the Lease expires or is terminated for either of the reasons described in the preceding paragraph, the obligation of the City to pay Rentals thereunder will terminate and the Bonds will be payable from, among other sources, such moneys, if any, as may be available under the Indenture. Should the Lease expire at the end of a Renewal Term without any extension for the next succeeding Renewal Term or if an event occurs pursuant to which the Trustee terminates the City's right of possession of the Projects under the Lease, the Trustee may recover and relet or sell the Authority's interest in the Projects as provided in the Indenture, subject to the City's Ownership Interest and the terms of the License Agreement, the Management Agreement, the Maverik Center Ground Lease and the Maverik Center Subordination Agreement, and in the case of the Fire Stations Project, the Fire Station Ground Lease. The Net Proceeds of any reletting or sale of

the Projects together with certain other moneys then held by the Trustee under the Indenture, are required to be used to pay the Bonds to the extent of such moneys. However, each separate public facility or property constituting the Projects represents special purpose facilities or property for use in connection with providing particular governmental services. No assurance can be given that the Trustee could relet or sell the Projects for the amount necessary to pay the principal of and the interest on the Bonds.

A potential purchaser of the Series 2016 Bonds should not assume that it will be possible to relet or sell the Projects after the expiration or termination of the City's right to possess the Projects under the Lease as described above for an amount equal to the aggregate principal amount of the Bonds then outstanding plus accrued interest thereon. In this regard, it should be noted that (a) the Projects may be subject to ad valorem taxes and other property taxation if owned by someone other than the City or other governmental body, (b) the use of the Projects by a non-governmental entity may affect the tax-exempt status of interest on the Bonds, (c) the Projects may not be suitable for general commercial use, (d) zoning restrictions could limit the use of the Projects and (e) pursuant to the Maverik Center Subordination Agreement, the Trustee, the City and the Authority will agree or have agreed that the occupants of the related Projects will not be disturbed in their use and enjoyment of this related project so long as they are in compliance with their agreements and obligations under their respective subleases. Furthermore, no assurance can be given that the amount, if any, realized upon any reletting or sale of the Projects will be available to provide for the payment of the Bonds on a timely basis.

Because the Lease will terminate in the event that the City Council fails to budget and appropriate sufficient City Funds to continue making Base Rentals and Additional Rentals during any Renewal Term of the Lease, a potential purchaser of the Series 2016 Bonds should carefully consider the nature of the security for payment of the Series 2016 Bonds in the event of a termination of the Master Lease. Under the Indenture and the Security Documents, the Projects are subject to a lien and security interest granted to the Trustee for the benefit of the holders of the Bonds. Upon the occurrence of an Event of Default under the Indenture (which is defined to include an Event of Default under the Master Lease), the Trustee may foreclose its lien on the Projects and may, in the case of the Maverik Center Project, subject to the City's Ownership Interest and the terms of the Maverik Center Ground Lease, the License Agreement, the Management Agreement and the Maverik Center Subordination Agreement, and in the case of the Fire Station Project, subject to the Fire Station Ground Lease, take possession of the Projects as trustee and fiduciary for the holders of the Bonds. In such event, the amount of payment on the Bonds will be dependent upon the ability of the Trustee to sell or lease the Projects to a subsequent purchaser or lessee. The ability of the Trustee to sell or lease the Projects may be limited to other governmental entities, since the use of the Projects by a non-governmental entity may adversely affect the tax-exempt status of interest on certain of the Bonds including the Series 2016 Bonds. A potential purchaser of the Series 2016 Bonds should carefully consider the information currently available and presented herein concerning the Projects. A potential Bondholder should not assume that it will be possible to liquidate the Projects after foreclosure of the lien of the Indenture for an amount equal to the aggregate principal amount of the Bonds then outstanding, plus accrued interest thereon.

Limited Remedies

A termination of the City's right of possession of the Projects under the Lease as a result of an Event of Default or expiration of the term of the Lease at the end of any Renewal Term without an extension for the next succeeding Renewal Term will give the Trustee the right to possession of, and the right to relet the Projects in accordance with the provisions of the Lease and the Indenture, in the case of the Maverik Center Project, subject to the City's Ownership Interest and the provisions of the Maverik Center Ground Lease, the License Agreement, the Maverik Center Subordination Agreement and the Management Agreement and, and in the case of the Fire Station Project, subject to the Fire Station Ground Lease. However, the enforceability of the Lease and the Indenture is subject to the applicable bankruptcy laws, equitable principles affecting the enforcement of creditors' rights generally and liens securing such rights, the police powers of the State of Utah, the exercise of judicial authority by state or Federal courts and the exercise by the United States of America of the powers delegated to it by the Federal Constitution. In addition, the Projects may be used for limited purposes. Due to the limited remedies available with respect to the Projects, the limited uses of the Projects and the delays inherent in obtaining foreclosure on real property and other judicial remedies, no assurance can be given that a court, in the exercise of judicial discretion, would enforce these remedies in a timely manner. Any delays in the ability of the Trustee to obtain possession of the Projects, of necessity, will result in delays in any payment of principal of or interest on the Bonds after the expenditure of amounts on deposit in the Debt Service Reserve Fund. Nor can any assurance be given that any

moneys realized by the Trustee upon an exercise of any remedies would be sufficient to pay the principal of and interest on the Bonds. In the event any such moneys recovered are in an amount less than the aggregate principal amount of all outstanding Bonds, plus accrued interest, the Bonds would be paid in part on a pro rata basis as described under the Indenture, and no holder of any Bond will have any further claim for payment upon the Authority or the City. See "APPENDIX B—EXTRACTS OF CERTAIN PROVISIONS OF THE INDENTURE AND THE MASTER LEASE—The Indenture—Application of Moneys."

City's Ownership Interest

As stated elsewhere in this Official Statement, the City owns a 21% undivided interest in the Maverik Center Project. The City's Ownership Interest is not being pledged as security for the Series 2016 Bonds. Consequently, only a 79% undivided interest in the Maverik Center Project is being granted pursuant to the Security Documents. Upon foreclosure under the Security Documents, the Trustee will only be able to proceed against the Authority's Ownership Interest in the Maverik Center Project. In an effort to facilitate any subsequent reletting or sale, the City has granted to the Authority an option to purchase the Leasehold Interest and the Authority has assigned such option to the Trustee for the benefit of the Bondholders. In the event of a foreclosure proceeding against the Authority's Ownership Interest in the Maverik Center Project, the Trustee may, but is not required to, purchase the Leasehold Interest at the then fair market value. A purchase of the Leasehold Interest would then permit the Trustee to relet or sell the entire Maverik Center Project. However, no assurance can be given that the Trustee would take such an action. Furthermore, no assurance can be given that the reletting or sale of the entire Maverik Center Project would generate sufficient moneys to pay the principal of and interest on the Bonds. In the event that the Trustee does not acquire the Leasehold Interest and only relets or sells the Authority's Ownership Interest in the Maverik Center Project, sufficient moneys may not be available to pay principal of and interest on the Bonds.

Destruction of Projects

The Lease requires that the Projects be insured by policies of insurance (including casualty and property damage with respect to certain portions of the Projects). If, prior to the termination of the Lease Term and the payment in full of the Bonds (or the making of provisions for the payment thereof in accordance with the Indenture) (i) the Projects or any material portion thereof shall be destroyed (in whole or in part), or damaged by fire or other casualty; or (ii) title to, or the temporary or permanent use of the Projects or any material portion thereof or the Projects or any material portion thereof shall be taken under the exercise of the power of eminent domain by any governmental body or by any person, firm or corporation acting under governmental authority; or (iii) a material defect in construction of a Project shall become apparent; or (iv) title to or the use of all or any material portion of the Projects shall be lost by reason of a defect in title thereto, the City shall be obligated, subject to the City's right to discharge its obligation to repair or replace the Projects, to continue to pay Rentals regardless of whether said Project or Projects shall have been accepted.

Subject to the City's right to discharge its obligation to repair or replace the Projects, the City, the Authority, and the Trustee shall cause the Net Proceeds of any insurance policies, performance bonds or condemnation awards with respect to a Project or Projects to be deposited in the Construction Fund if received before the Completion Date of the respective Project and in a separate trust fund under the Indenture if received thereafter. All Net Proceeds so deposited shall be applied to the prompt repair, restoration, modification or improvement of said Project by the City. The balance of any such Net Proceeds remaining after such repair, restoration, modification or improvement has been completed shall be transferred to the Bond Fund to be applied to the payment of the principal of, premium, if any, and interest on the applicable Series of Bonds, or if said Bonds shall have been fully paid (or provision for payment thereof has been made in accordance with the provisions of the Indenture), any balance remaining in such Construction Fund or separate trust fund shall be paid to the City. If the Net Proceeds shall be insufficient to pay in full the cost of any repair, restoration, modification or improvement, the City shall, from and to the extent of available City Funds, complete the work and pay any cost in excess of the amount of the Net Proceeds.

In the event that the Net Proceeds of any insurance policy, performance bond or condemnation award shall be insufficient to pay in full the cost of any repair, restoration, or modification of a Project or Projects, the appropriate budget officers of the City shall, within 30 days of notice of such insufficiency, seek an appropriation

from the City Council for an amount equal to any such insufficiency. In the event that the City shall fail to appropriate, by the first day of the next Renewal Term following such request for an appropriation, an amount at least equal to such insufficiency for such purpose, the obligation to repair and replace said Project or Projects may be discharged by depositing the Net Proceeds of the insurance policies, performance bonds or condemnation awards made available by reason of such occurrence into the Bond Fund. Upon the deposit of such Net Proceeds in said Bond Fund, the City shall have no further obligation for the payment of Base Rentals and Additional Rentals, and possession of said Project or Projects as well as all rights created pursuant to the Lease and the interest of the City and the Authority therein and in any funds or accounts created under the Indenture with respect to said Project or Projects (except for moneys held in the Rebate Fund or for the payment of Bonds not then deemed Outstanding), shall be surrendered to the Trustee, as trustee for the Bondholders of the applicable Series of Bonds. Thereafter, the Authority's interest in said Project or Projects may be liquidated pursuant to the provisions of and subject to the limitations set forth in the Indenture and Security Documents and the proceeds of such liquidation and the Net Proceeds of any insurance policy, performance bond or condemnation award so deposited in the Bond Fund, as well as all other moneys on deposit in any fund created under the Indenture with respect to said Project or Projects (except moneys held in the Rebate Fund or for the payment of Bonds not then deemed Outstanding), shall be applied to the redemption of the applicable Series of Bonds on the next succeeding redemption date. Such redemption of the applicable Series of Bonds shall be made upon full or partial payment of the principal amount of said Bonds then Outstanding and accrued interest thereon all in accordance with the Indenture. See "APPENDIX B—EXTRACTS OF THE INDENTURE AND THE MASTER LEASE—The Master Lease—Damage, Destruction, and Condemnation" herein.

The City is required under the Lease to cause the Projects to be insured by policies of casualty and property damage insurance in an amount not less than the full insurable value of the Projects. The term "full insurable value" as used in the Lease means the actual replacement value, or at the option of the City any lesser amount which is equal to or greater than the principal amount of all of the Bonds then Outstanding of the Series which financed said Project (or applicable portions thereof in case said Series of Bonds financed more than one Project). Alternatively, the City may insure or cause to be insured under a blanket insurance policy or policies which cover not only the Projects but other properties in the amounts required by the previous sentence. However, there is no assurance that, in the event the Lease is terminated as a result of damage to or destruction or condemnation of the Projects, moneys made available by reason of such an occurrence will be sufficient to redeem the Bonds at a price equal to the principal amount thereof outstanding plus accrued interest to the redemption date.

Depreciation and Obsolescence

Certain components of the Projects may become obsolete, may depreciate in value or may wear out during the time that the Series 2016 Bonds are outstanding. In addition, components of the Projects may be difficult or impossible to remove from their place of service or use. Consequently, following an Event of Nonappropriation or an Event of Default under the Lease of the Indenture or termination of the Lease for any reason, any amounts realized by the Trustee from a reletting or sale of the Projects may not be sufficient to redeem or pay all outstanding Series 2016 Bonds in full.

Continued Use by Hockey Club and the Manager

As more fully described under "THE 2016 PROJECT—The Maverik Center Project" herein, the City has entered into the License Agreement with the Hockey Club and the Management Agreement with the Manager pursuant to which the City will provide the Maverik Center Project and the Hockey Club and the Manager are to have the exclusive right (subject to certain limitations) to use and manage the Maverik Center Project for professional hockey, sporting and entertainment events. If the Hockey Club and the Manager fail, for any reason, to perform in accordance with the requirements of the License Agreement and the Management Agreement, the City would need to replace the Hockey Club with an acceptable alternative tenant and would need to engage a new manager for the Maverik Center Project.

Release of Projects

The Lease provides for the transfer of certain portions of the Projects to the City, and the release of such portions of the Projects from the lien of the Indenture upon the satisfaction of certain conditions. The release of

portions of the Projects from the lien of the Indenture will necessarily result in a reduction in the value of the security interests held by the Trustee for the benefit of the owners of the Bonds and may reduce the City's incentives to renew the Lease for any future renewal term.

Depreciation and Lack of Residual Value

Certain components of the Leased Property that have relatively short useful lives may depreciate in value during the time that the Series 2016 Bonds are outstanding. In addition, various components of the Projects may be difficult or impossible to remove from their points of service or use. Consequently, following an Event of Nonappropriation or an Event of Default under the Lease or the Indenture or termination of the Lease for any reason, it is probable that revenues realized by the Trustee from a sale or reletting of the Projects may be insufficient to redeem or pay all outstanding Series 2016 Bonds in full.

Tax Status

Maverik Center. Failure by the Authority or the City to comply with certain covenants in the Indenture, the Master Lease and the Tax Matters Certificate executed by the City and the Authority at the time of issuance of the Series 2016 Bonds, on a continuous basis, so long as any of the Series 2016 Bonds are outstanding under the Indenture and thereafter as required by such covenants and applicable law, could result in interest on the Series 2016 Bonds becoming includible in federal gross income, retroactive to the date of their original issuance. See "TAX MATTERS" herein. The Indenture and the Series 2016 Bonds do not provide for the payment of any additional interest or penalty in the event that interest on the Series 2016 Bonds becomes includible in federal gross income.

Additional Parity Debt

The Indenture provides that the Authority may issue Additional Bonds and Refunding Bonds upon compliance with certain requirements. In the event the Authority were to issue Additional Bonds or Refunding Bonds, such issuance of Additional Bonds or Refunding Bonds could result in dilution of the collateral security pledged to secure the payment of the Series 2016 Bonds. The Authority currently does not have any plans to issue any Additional Bonds or Refunding Bonds.

LEGAL MATTERS

General

All legal matters incident to the authorization and issuance of the Series 2016 Bonds are subject to the approval of Ballard Spahr LLP, Bond Counsel to the Authority. The approving opinion of Bond Counsel will be delivered with the Series 2016 Bonds. The opinion of Bond Counsel will be in substantially the form set forth in "APPENDIX E" to this Official Statement. Certain legal matters will be passed upon for the Authority and the City by the office of the City Attorney, Counsel to the Authority and the City.

Absence of Litigation

It is a condition of closing that the Authority execute a certificate to the effect that to the best of its knowledge, after due inquiry, there is no action, suit, proceeding, inquiry or investigation, at law or in equity, before or by any court, public board or body, pending or threatened against or affecting the Authority, nor to the best knowledge of the Authority is there any basis therefor, wherein an unfavorable decision, ruling or finding would materially adversely affect the transactions contemplated by the Master Lease or any other agreement or instrument to which the Authority is a party and which is used or contemplated for use in the consummation of the transaction contemplated by the Master Lease.

It is a condition of closing that the City execute a certificate to the effect that, to the best of its knowledge, after due inquiry, there is no action, suit, proceeding, inquiry or investigation, at law or in equity, before or by any court, public board or body, pending or threatened against or affecting the City, nor to the best knowledge of the City is there any basis therefor, wherein an unfavorable decision, ruling or finding would materially adversely affect the transactions contemplated by the Master Lease or any other agreement or instrument to which the City is a party

and which is used or contemplated for use in the consummation of the transactions contemplated by the Master Lease.

A non-litigation certificate executed by the office of the City Attorney, counsel to the Authority and the City, dated the date of original delivery of the Series 2016 Bonds, will be provided stating, among other things, that, to the best of his knowledge, after due inquiry, there is no action, suit, proceeding, inquiry or any other litigation or investigation, at law or in equity, before or by any court, public board or body, which is pending or threatened, challenging the creation, organization or existence of the Authority or the City, or the titles of their officers to their respective offices, or seeking to restrain or enjoin the issuance, sale or delivery of the Series 2016 Bonds, or for the purpose of restraining or enjoining the levy and collection of taxes or assessments by the city, or directly or indirectly contesting or affecting the proceedings or the authority by which the Series 2016 Bonds are issued, the legality of the purpose for which the Series 2016 Bonds are issued, or the validity of the Series 2016 Bonds or the issuance thereof.

TAX MATTERS

Federal Income Tax. In the opinion of Ballard Spahr LLP, Bond Counsel to the Authority, interest on the Series 2016 Bonds is excludable from gross income for purposes of federal income tax under existing laws as enacted and construed on the date of initial delivery of the Series 2016 Bonds, assuming the accuracy of the certifications of the Authority and the City and continuing compliance by the Authority and the City with the requirements of the Internal Revenue Code of 1986. Interest on the Series 2016 Bonds is not an item of tax preference for purposes of either individual or corporate federal alternative minimum tax ("AMT"); however, interest on Series 2016 Bonds held by a corporation (other than an S corporation, regulated investment company, or real estate investment trust) may be indirectly subject to federal AMT because of its inclusion in the adjusted current earnings of a corporate holder.

Original Issue Premium. Certain of the Series 2016 Bonds may be offered at a premium ("original issue premium") over their principal amount. For federal income tax purposes, original issue premium is amortizable periodically over the term of such Series 2016 Bond through reductions in the holder's tax basis for such Series 2016 Bond for determining taxable gain or loss from sale or from redemption prior to maturity. Amortization of premium does not create a deductible expense or loss. Holders should consult their tax advisors for an explanation of the amortization rules.

Original Issue Discount. Certain of the Series 2016 Bonds may be offered at a discount ("original issue discount") equal generally to the difference between public offering price and principal amount. Original issue discount on a Series 2016 Bond accrues as tax-exempt interest periodically over the term of the Series 2016 Bond. The accrual of original issue discount increases the holder's tax basis in the Series 2016 Bond for determining taxable gain or loss from sale or from redemption prior to maturity. Series 2016 Bondholders should consult their tax advisors for an explanation of the accrual rules.

State of Utah Income Tax. Bond Counsel is also of the opinion that interest on the Series 2016 Bonds is exempt from State of Utah individual income taxes under currently existing law.

No Further Opinion. Bond Counsel expresses no opinion regarding any other tax consequences relating to ownership or disposition of, or the accrual or receipt of interest on, the Series 2016 Bonds.

Changes in Federal and State Tax Laws. From time to time, there are Presidential proposals, proposals of various federal committees, and legislative proposals in the Congress and in the states that, if enacted, could alter or amend the federal and state tax matters referred to herein or adversely affect the marketability or market value of the Series 2016 Bonds or otherwise prevent holders of the Series 2016 Bonds from realizing the full benefit of the tax exemption of interest on the Series 2016 Bonds. Further, such proposals may impact the marketability or market value of the Series 2016 Bonds simply by being proposed. It cannot be predicted whether or in what form any such proposal might be enacted or whether if enacted it would apply to Series 2016 Bonds issued prior to enactment. In addition, regulatory actions are from time to time announced or proposed and litigation is threatened or commenced which, if implemented or concluded in a particular manner, could adversely affect the market value, marketability or tax status of the Series 2016 Bonds. It cannot be predicted whether any such regulatory action will be implemented,

how any particular litigation or judicial action will be resolved, or whether the Series 2016 Bonds would be impacted thereby.

Purchasers of the Series 2016 Bonds should consult their tax advisors regarding any pending or proposed legislation, regulatory initiatives or litigation. The opinions expressed by Bond Counsel are based upon existing legislation and regulations as interpreted by relevant judicial and regulatory authorities as of the date of issuance and delivery of the Series 2016 Bonds, and Bond Counsel has expressed no opinion as of any date subsequent thereto or with respect to any proposed or pending legislation, regulatory initiatives or litigation.

UNDERWRITING

_____, as the underwriter of the Series 2016 Bonds (the "Underwriter"), has agreed, subject to certain conditions, to purchase all of the Series 2016 Bonds from the Authority at a purchase price of $_____ (being the par amount of the Series 2016 Bonds less underwriter's discount of $_____, plus [net] original issue premium of $_____) and to make a public offering of the Series 2016 Bonds. The Series 2016 Bonds may be offered and sold to certain dealers (including dealers depositing the Series 2016 Bonds into investment trusts) at prices lower than the offering prices set forth on the cover page of this Official Statement and such public offering prices may be changed from time to time.

BOND RATINGS

_____ has assigned a municipal bond ratings of "_____,"to the Series 2016 Bonds.

Any explanation of the significance of these outstanding ratings may be obtained only from the rating agency furnishing the same. There is no assurance that the ratings given to the Series 2016 Bonds will be maintained for any period of time or that the ratings may not be lowered or withdrawn entirely by the rating agencies if, in their judgment, circumstances so warrant. Any such downward change or withdrawal of such ratings may have an adverse effect on the market price of the Series 2016 Bonds.

CONTINUING DISCLOSURE UNDERTAKING

The City has undertaken for the benefit of the Owners and the Beneficial Owners of the Series 2016 Bonds to provide certain annual financial information and operating data to certain repositories and the City has undertaken for the benefit of the Owners and Beneficial Owners of the Series 2016 Bonds to provide notice of certain material events to certain repositories all in order to assist the Underwriter in complying with Rule 15c2-12(b)(5) of the Securities and Exchange Commission (the "Rule"). See "APPENDIX D" attached hereto and incorporated herein by reference for a form of the Continuing Disclosure Agreement that will be executed and delivered by the City. The City has previously entered into continuing disclosure undertaking pursuant to the Rule.

MISCELLANEOUS

Independent Auditors

The general purpose financial statements of the City at and for the fiscal year ended June 30, 2015, contained in "APPENDIX A" to this Official Statement, have been audited by Jensen & Keddington, P.C., ("Jensen") independent auditors, as set forth in their report included in "APPENDIX A" hereto. Jensen has not been asked to provide its consent to the inclusion of the audit in this Official Statement, nor has Jensen performed any additional procedures relating to this Official Statement.

Copies of the City's comprehensive annual financial report may be obtained upon request from the City Manager, 3600 Constitution Boulevard, West Valley City, Utah 84119-3720.

Municipal Advisor

The Authority has engaged Lewis Young Robertson & Burningham, Inc., Salt Lake City, Utah (the "Municipal Advisor"), to provide financial recommendations and guidance to the Authority with respect to

preparation for sale of the Series 2016 Bonds, timing of sale, tax-exempt bond market conditions, costs of issuance and other factors relating to the sale of the Series 2016 Bonds. The Municipal Advisor has read and participated in the drafting of certain provisions of this Official Statement. The Municipal Advisor has not audited, authenticated or otherwise verified the information set forth in the Official Statement, or any other related information available to the Authority of the City, with respect to accuracy and completeness of disclosure of such information, and no guaranty, warranty or other representation is made by the Municipal Advisor respecting accuracy and completeness of the Official Statement or any other matters related to the Official Statement. Municipal Advisor fees are contingent upon the sale and delivery of the Series 2016 Bonds.

Additional Information

The Authority and the City have furnished all information in this Official Statement relating to the Authority and the City. Any statements made in this Official Statement involving matters of opinion or of estimates, whether or not so expressly stated, are set forth as such and not as representations of fact, and no representation is made that any of the estimates herein will be realized.

The City presently maintains its financial records on a July 1 to June 30 fiscal year basis. See "APPENDIX A" to this Official Statement for extracts from the City's Comprehensive Annual Financial Report (including the audited general purpose financial statements) for the fiscal year ended June 30, 2015.

All quotations contained herein from and summaries and explanations of the Utah Constitution, statutes, programs, laws of the State, court decisions, and the Indenture do not purport to be complete, and reference is made to said Constitution, statutes, programs, laws, court decisions and the Indenture for full and complete statements of their respective provisions.

The appendices attached hereto are an integral part of this Official Statement, and should be used in conjunction with the foregoing material.

This Official Statement has been duly approved, executed and delivered by the Municipal Building Authority of West Valley City, Utah and West Valley City, Utah.

MUNICIPAL BUILDING AUTHORITY OF WEST VALLEY CITY, UTAH

By:_____
President

WEST VALLEY CITY, UTAH

By:_____
Mayor

APPENDIX A

GENERAL PURPOSE FINANCIAL STATEMENTS OF WEST VALLEY CITY, UTAH FOR THE FISCAL YEAR ENDING JUNE 30, 2015

APPENDIX B

EXTRACTS OF THE INDENTURE AND THE MASTER LEASE

[*To Be Conformed*]

The following extracts briefly outline certain provisions contained in the Indenture, the Master Lease and the Security Documents and are not to be considered as a full statement of the Indenture, the Master Lease and the Security Documents. Reference is made to the Indenture, the Master Lease and the Security Documents for full details of all of the terms of such documents, of the Series 2016 Bonds, the security provisions appertaining of the Indenture, the application of the Base Rentals and the definition of any terms used but not defined in this Official Statement.

THE INDENTURE

Definitions

"Additional Bonds" means all Bonds (other than the Initial Bonds) issued under and pursuant to the Indenture.

"Amendment to Master Lease" means any amendment to the Master Lease between the Authority and the City entered into pursuant to and in compliance with the provisions of the Indenture and the Master Lease.

"Authority" means the Municipal Building Authority of West Valley City, Utah and its successors.

"Base Rate" means the Zions First National Bank prime rate of interest for commercial loans plus 2%.

"Board" means the governing board of the Authority.

"Bond Documents" means the Master Lease, the Security Documents and the Indenture.

"Bond Fund" means the Municipal Building Authority of West Valley City, Utah Bond Fund established under the Indenture.

"Bond Registrar" means the Trustee (or other party designated as Registrar by Supplemental Indenture), appointed as the initial registrar for the Bonds pursuant to the Indenture, and any additional or successor registrar appointed pursuant thereto.

"Bondholder," "Holder" or "Registered Owner" means the person or persons in whose name or names a Bond shall be registered on the books of the Authority kept for that purpose in accordance with provisions of the Indenture.

"Bonds" means (i) Initial Bonds, (ii) any Refunding Bonds issued pursuant to the Indenture and (iii) any Additional Bonds issued pursuant to the Indenture.

"Code" means the Internal Revenue Code of 1986, as amended.

"Construction Fund" means the Municipal Building Authority of West Valley City, Utah Construction Fund established under the Indenture.

"Cost of Issuance Account" means the Municipal Building Authority of West Valley City, Utah Cost of Issuance Account established under the Indenture.

"Debt Service Reserve Fund" means the Municipal Building Authority of West Valley City, Utah Debt Service Reserve Fund established under the Indenture for the purpose of securing payment of Bonds issued thereunder.

"Debt Service Reserve Requirement" means with respect to each Series of Bonds issued pursuant to the Indenture, and unless otherwise provided in the related Supplemental Indenture, an amount equal to the least of (i) 10% of the proceeds of such Series of Bonds determined on the basis of its initial purchase price to the public, (ii) the maximum Aggregate Annual Debt Service Requirement during any Fiscal Year for such Series of Bonds, and (iii) 125% of the average Aggregate Annual Debt Service Requirement for such Series of Bonds; provided, however, that in the event any Series of Additional Bonds is issued to refund only a portion and not all of the then Outstanding Bonds of any other Series of Bonds issued pursuant to the Indenture (the "Prior Bonds"), then the portion of such Series of Prior Bonds that remain Outstanding immediately after the issuance of such Additional Bonds and the portion of such Additional Bonds that is allocable to the refunding of such Series of Prior Bonds shall be combined and treated as a single Series for purpose of determining the Debt Service Reserve Requirement relating to such combined Series. The Debt Service Reserve Requirement may be funded by a Reserve Instrument as provided in the Indenture. Each Subaccount of the Debt Service Reserve Fund shall only be used with respect to the related Series of Bonds.

"Direct Obligations" means direct noncallable obligations of (including obligations issued or held in book-entry form on the books of) the Department of the Treasury of the United States of America, obligations unconditionally guaranteed as to principal and interest by the United States of America and evidences of ownership interests in such direct or unconditionally guaranteed obligations.

"Event of Default" means any occurrence or event specified in and defined by the Indenture.

"General Indenture" means the General Indenture of Trust, by and between the Authority and the Trustee.

"Indenture" means the General Indenture and any Supplemental Indentures entered into in compliance with the provisions of the Indenture.

"Initial Bonds" means the first Series of Bonds issued under the Indenture.

"Interest Payment Date" means the stated payment date of an installment of interest on the Bonds.

"Investment Obligations" means any of the following securities:

(a) Direct Obligations;

(b) Obligations of any of the following federal agencies which obligations represent full faith and credit obligations of the United States of America: the Export-Import Bank of the United States; the Government National Mortgage Association; the Federal Financing Bank; the Farmer's Home Administration; the Federal Housing Administration; the Maritime Administration: General Services Administration, Small Business Administration; or the Department of Housing and Urban Development (PHA's);

(c) Money market funds rated "AAAm" or "AAAm-G" or better by S & P;

(d) Commercial paper which is rated at the time of purchase in the single highest classification, P-1 by Moody's or A-1+ by S & P, and which matures not more than 270 days after the date of purchase;

(e) Bonds, notes or other evidences or indebtedness rated "AAA" by S & P and "Aaa" by Moody's issued by the Federal National Mortgage Association or the Federal Home Loan Mortgage Corporation with remaining maturities not exceeding three years;

(f) U.S. dollar denominated deposit accounts, federal funds and banker's acceptances with domestic commercial banks which have a rating on their short term certificates of deposit on the date or purchase of "A-1" or "A-1+" by S & P and "P-1" by Moody's and maturing no more than 360 days after the date or purchase (ratings on holding companies are not considered as the rating of the bank);

(g) the fund held by the Treasurer for the State of Utah and commonly known as the Utah State Public Treasurer's Investment Fund; and

(h) Any investments or securities permitted for investment of public funds under the State Money Management Act of 1974, Title 51, Chapter 7, Utah Code Annotated 1953, as amended.

"Master Lease" means the Master Lease Agreement dated as of even date herewith by and between the Authority and the City and any amendments and supplements thereto entered into in accordance with the Indenture.

"Moody's" means Moody's Investors Service, its successors and assigns, and, if such corporation shall no longer perform the functions of a securities rating agency, "Moody's" shall be deemed to refer to any other nationally recognized securities rating agency designated by the Authority.

"Outstanding" or "Bonds Outstanding" means all Bonds which have been authenticated and delivered by the Trustee under the Indenture, except:

(a) Bonds delivered to the Trustee for cancellation, whether after purchase in the open market or because of payment at, or redemption prior to, maturity;

(b) Bonds in lieu of which others have been authenticated under the Indenture; and

(c) Bonds deemed paid under the Indenture.

"Paying Agent" means the Trustee, appointed as the initial paying agent for the Bonds pursuant to the Indenture, and any additional or successor paying agent appointed pursuant thereto.

"Project" or "Projects" means collectively all Projects identified in Supplemental Indentures to be financed or refinanced with a Series of Bonds issued under the Indenture.

"Rebatable Arbitrage" shall mean with respect to any Series of Bonds the amount (determinable as of each Rebate Calculation Date) of rebatable arbitrage payable to the United States at the times and in the amounts specified in Section 148(f)(3) of the Code and Section 1.148-3 of the Regulations.

"Rebate Calculation Date" means, with respect to each Series of Bonds, the Interest Payment Date next preceding the fifth anniversary of the issue date of such Series of Bonds, each fifth anniversary of the initial Rebate Calculation Date for such Series of Bonds, and the date of retirement of the last Bond of such Series.

"Rebate Fund" means the Municipal Building Authority of West Valley City, Utah Rebate Fund established under Section 5.6 of the Indenture.

"Refunding Bonds" means all Bonds (other than the Initial Bonds) issued pursuant to Section 2.12 of the Indenture.

"Register" means the record of ownership of the Bonds maintained by the Registrar.

"Regular Record Date" means the fifteenth day (whether or not a Business Day) next preceding each Interest Payment Date.

"Regulations" and all references thereto shall mean and include applicable final, proposed and temporary United States Treasury Regulations, promulgated with respect to Sections 103 and 141 through 150 of the Code, including all amendments thereto made hereafter.

"Repair and Replacement Fund" means the Municipal Building Authority of West Valley City, Utah Repair and Replacement Fund established under the Indenture.

"Required Rebate Deposit" means, with respect to any Series of Bonds an amount determinable as of each Rebate Calculation Date, which when added to amounts then on deposit in the Rebate Fund with respect to such Series of Bonds, if any, equals the aggregate amount of Rebatable Arbitrage for such Series of Bonds less the amount of Rebatable Arbitrage theretofore paid to the United States with respect to such Series of Bonds, if any.

"Reserve Instrument" means a device or instrument issued by a Reserve Instrument Issuer to satisfy all or any portion of the Debt Service Reserve Requirement applicable to a Series of Bonds. The term "Reserve Instrument" includes, by way of example and not of limitation, letters of credit, bond insurance policies, surety bonds, standby bond purchase agreements, lines of credit and other devices.

"Reserve Instrument Agreement" means any agreement entered into by the Issuer and a Reserve Instrument Provider pursuant to a Supplemental Indenture and providing for the issuance by such Reserve Instrument Provider of a Reserve Instrument.

"Reserve Instrument Costs" means all fees, premiums, expenses and similar costs, other than Reserve Instrument Repayment Obligations, required to be paid to a Reserve Instrument Provider pursuant to a Reserve Instrument Agreement. Each Reserve Instrument Agreement shall specify the fees, premiums, expenses and costs constituting Reserve Instrument Costs.

"Reserve Instrument Coverage" means, as of any date of calculation, the aggregate amount available to be paid to the Trustee pursuant hereto under all Reserve Instruments.

"Reserve Instrument Fund" means the Municipal Building Authority of West Valley City, Utah Revenue Reserve Instrument Fund created in the Indenture to be held by the Trustee and administered pursuant to the Indenture.

"Reserve Instrument Limit" means, as of any date of calculation and with respect to any Reserve Instrument, the maximum aggregate amount available to be paid under such Reserve Instrument into the Debt Service Reserve Fund assuming for purposes of such calculation that the amount initially available under each Reserve Instrument has not been reduced or that the amount initially available under each Reserve Instrument has only been reduced as a result of the payment of principal of the Bonds.

"Reserve Instrument Provider" means any bank, savings and loan association, savings bank, thrift institution, credit union, insurance company, surety company or other institution issuing a Reserve Instrument.

"Reserve Instrument Repayment Obligations" means, as of any date of calculation and with respect to any Reserve Instrument Agreement, those outstanding amounts payable by the Issuer under such Reserve Instrument Agreement to repay the Reserve Instrument Provider for payments previously made by it pursuant to a Reserve Instrument. There shall not be included in the calculation of Reserve Instrument Repayment Obligations any Reserve Instrument Costs. Each Reserve Instrument Agreement and the Supplemental Indenture authorizing the execution and delivery of such Reserve Instrument Agreement shall specify the amounts payable under it which, when outstanding, shall constitute Reserve Instrument Repayment Obligations and shall specify the portions of such amounts that are allocable as principal of and as interest on such Reserve Instrument Repayment Obligations.

"S&P" means Standard & Poor's Ratings Services, a division of The McGraw-Hill Companies, Inc., its successors and assigns, and, if such entity shall no longer perform the functions of a securities rating agency, "S&P" shall be deemed to refer to any other nationally recognized securities rating agency designated by the Authority, with the approval of the Trustee.

"Security Documents" means collectively the security documents described in each Supplemental Indenture.

"Serial Bonds" means those Bonds other than Term Bonds.

"Series" means all of the Bonds authenticated and delivered on original issuance and identified pursuant to the Supplemental Indenture authorizing such Bonds as a separate Series of Bonds, and any Bonds thereafter authenticated and delivered in lieu of the Indenture or in substitution therefor.

"Sinking Fund Account" means the Municipal Building Authority of West Valley City, Utah Sinking Fund Account of the Bond Fund established under the Indenture.

"Sinking Fund Installment" means the amount of money which is required to be deposited into the Sinking Fund Account in each year as specified in the Supplemental Indenture authorizing Term Bonds for the retirement of such Term Bonds (whether at maturity or by redemption), and including the redemption premium, if any.

"Special Record Date" means such date as may be fixed for the payment of defaulted interest on the Bonds in accordance with the General Indenture.

"State" means the State of Utah.

"Supplemental Indenture" means any indenture between the Authority and the Trustee entered into pursuant to and in compliance with the provisions of the Indenture.

"Term Bonds" means the Bonds which are subject to retirement by operation of mandatory sinking fund redemptions from the Sinking Fund Account.

"Trust Estate" means the property conveyed to the Trustee pursuant to the Granting Clauses of the Indenture.

"Trustee" means Zions First National Bank, a national banking association, Salt Lake City, Utah, and its successors and any association resulting from or surviving any consolidation or merger to which it or its successors may be a party and any successor trustee at the time serving as successor trustee under the Indenture.

Indenture to Constitute Contract

In consideration of the purchase and acceptance from time to time of any and all of the Bonds authorized to be issued under the Indenture by the Registered Owners thereof, the Indenture shall be deemed to be and shall constitute a contract between the Authority and the Owners from time to time of the Bonds; and the pledge made in the Indenture and the covenants and agreements set forth therein to be performed by or on behalf of the Authority shall be for the equal benefit, protection and security of the Owners of any and all of the Bonds all of which, regardless of the time or times of their authentication and delivery or maturity, shall be of equal rank without preference, priority or distinction of any of the Bonds over any other thereof, except as expressly provided in or permitted by the Indenture.

Limited Obligation

The Bonds shall be special, limited obligations of the Authority payable solely out of and to the extent available from the Base Rentals, and, if paid by the City, the Purchase Option Price under the Master Lease and other amounts derived from the leasing of the Projects (except to the extent paid out of moneys attributable to the proceeds derived from the sale of the Bonds or to income from the temporary investment thereof and, under certain circumstances, to moneys held in funds or accounts by the Trustee, to Net Proceeds from insurance policies, performance bonds, condemnation awards and liquidation proceeds with respect to the Projects) and shall be a valid claim of the respective Bondholders thereof only against the Bond Fund, the Debt Service Reserve Fund and other moneys held by the Trustee (except moneys on deposit in the Rebate Fund or for the payment of Bonds not then deemed Outstanding) and the Base Rentals, and other amounts derived from the leasing of the Projects under the Master Lease, which Base Rentals and other amounts are hereby pledged, assigned and otherwise secured for the equal and ratable payment of the Bonds and shall be used for no other purpose than to pay the principal of, premium, if any, and interest on the Bonds, except as may be otherwise expressly authorized in the Indenture or in the Master Lease. The Authority shall not be obligated to pay the principal of such Bonds or the interest thereon or other costs incident thereto except from the moneys pledged therefor under the Indenture. The Bonds and the interest thereon

shall never constitute general obligation indebtedness of the City within the meaning of any constitutional limitation or statutory provision and shall not constitute or give rise to a pecuniary liability of the City or a charge against the general credit or taxing power of the City. Neither the City, nor the Authority on its behalf, has pledged the credit of the City to the payment of the Bonds, the interest thereon or amounts due or to become due under the Master Lease. The City shall not be obligated to appropriate City Funds for the purpose of paying Base Rentals, Additional Rentals or the Purchase Option Price under the Master Lease, and no judgment may be entered against the City in the event of an insufficiency of moneys to pay the principal of, premium, if any, and interest on the Bonds. The payment obligations of the City under the Master Lease are subject to annual renewal and will be terminated upon the occurrence of an Event of Nonappropriation. In such event, all payments from the City under the Master Lease will terminate, and the Bonds and the interest thereon will be payable solely from and to the extent of such moneys, if any, as may be held by the Trustee under the Indenture (except amounts on deposit in the Rebate Fund or held for the payment of Bonds not deemed Outstanding) and, subject to the provisions of ARTICLE VIII of the Indenture, any moneys made available from a liquidation of the Authority's interest in the Project financed with such Bonds subsequent to foreclosure of the lien of the Indenture and the Security Documents. No deficiency judgment subsequent to foreclosure of the lien of the Indenture and the Security Documents may be entered against the City or the Authority, and no breach of any provision of the Master Lease, the Security Documents or the Indenture shall impose any general obligation or liability upon or a charge against the City, the Authority or upon the general credit or taxing powers of the City. Except as provided in the Indenture, no judgment requiring a payment of money may be entered against the City under the Master Lease.

Subordination of Master Lease to Indenture

As provided in the Indenture, pursuant to the Master Lease, the City's interest in the Projects and its interest as lessee under the Master Lease shall at all times be subject to the lien of the Indenture; provided, however, that so long as no Event of Default under the Indenture or an Event of Nonappropriation has occurred and is then continuing, the Master Lease shall remain in full force and effect notwithstanding such subordination, and the City shall not be disturbed by the Authority or the Trustee in its possession, use and enjoyment of the Projects during the term of the Master Lease or in the enjoyment of its rights under the Master Lease; provided further that the Indenture and the rights and privileges thereunder of the Trustee and Bondholders are specifically made subject and subordinate to the rights and privileges of the City set forth in the Master Lease to exercise its option to purchase the Projects in the event of, and subsequent to, the occurrence of an Event of Default, but prior to the liquidation of the Authority's interest in the Projects. As a condition of the exercise of such option, the City under the Master Lease must pay, in addition to the Purchase Option Price, any interest payment deficiencies accruing from the date of the Event of Default or Event of Nonappropriation. The Trustee agrees that it shall execute and deliver any instrument necessary or appropriate at any time to confirm, evidence or enable the City to enjoy such rights and privileges, including without limitation, those referred to in the Indenture.

Nonpresentation of Bonds

Unless otherwise provided by Supplemental Indenture, in the event any Bond shall not be presented for payment when the principal thereof becomes due, either at maturity or otherwise, or at the date fixed for redemption thereof, if funds sufficient to pay such Bond shall have been made available to the Trustee, all liability of the Authority to the Registered Owner thereof for the payment of such Bond shall forthwith cease, determine and be completely discharged, and thereupon it shall be the duty of the Trustee to hold such fund or funds, without liability to the Registered Owner of such Bond for interest thereon, for the benefit of the Registered Owner of such Bond who shall thereafter be restricted exclusively to such fund or funds for any claim of whatever nature on his part under the Indenture or on, or with respect to, said Bond. If any Bond shall not be presented for payment within four years following the date when such Bond becomes due, whether by maturity or otherwise, the Trustee shall, to the extent permitted by law, repay to the Authority the funds theretofore held by it for payment of such Bond, and such Bond shall, subject to the defense of any applicable statute of limitation, thereafter be an unsecured obligation of the Authority, and the Registered Owner thereof shall be entitled to look only to the Authority for payment, and then only to the extent of the amount so repaid, and the Authority shall not be liable for any interest thereon and shall not be regarded as a trustee of such money. The provisions of the Indenture with respect to the nonpresentation of bonds are subject to the provisions of Title 67, Chapter 4a, Utah Code Annotated 1953, as amended.

General Covenants

Payment of Principal and Premium, if any, and Interest. The Authority covenants that it will promptly pay the principal of and premium, if any, and interest on every Bond issued under the Indenture at the place, on the dates and in the manner provided therein and in the Bonds according to the true intent and meaning thereof, but solely from the Trust Estate created by the Indenture, including the Base Rentals and, if paid by the City under the Master Lease, the Purchase Option Price with respect to a Project or Projects, and other amounts pledged therefor which are from time to time held by Trustee in the Bond Fund and the Debt Service Reserve Fund. The principal of and premium, if any, and interest on the Bonds are payable solely from the Trust Estate created by the Indenture, including the Base Rentals and, if paid by the City under the Master Lease, the Purchase Option Price with respect to a Project or Projects, and other amounts derived from the lease of the Projects and otherwise as provided in the Indenture, in the Security Documents, and in the Master Lease, which amounts are hereby specifically pledged to the payment thereof in the manner and to the extent in the Indenture and in the Master Lease specified, and nothing in the Bonds or in the Indenture shall be construed as pledging any other funds or assets of the Authority or the City. The Authority shall in no event be liable for the payment of the principal of and premium, if any, or interest on any of the Bonds or for the performance of any pledge, obligation or agreement undertaken by the Authority except to the extent that the moneys, properties, interests and assets constituting the Trust Estate are sufficient therefor.

Further Assurances. The Authority will, at the City's expense, do, execute, acknowledge and deliver all and every act, deed, conveyance, transfer and assurance necessary or proper for the perfection of the lien and security interest being provided in the Indenture for in the Trust Estate, whether now owned or held or hereafter acquired, including, but not limited to, such financing statements and continuation statements as shall be necessary under applicable law to perfect and maintain the security interest being provided in the Indenture for in the Trust Estate.

Actions with Respect to the Trust Estate. The Authority will not:

(a) Declare a default or exercise the remedies of the seller or lessor, as the case may be, under, or terminate, modify or accept a surrender of, or offer or agree to any termination, waiver, modification or surrender of, the Master Lease (except as otherwise expressly provided in the Indenture) or by affirmative act consent to the creation or existence of any lien or encumbrance (other than the security interest and lien of the Indenture and the Security Documents) to secure the payment of indebtedness upon the leasehold or other estate created by the Master Lease or any part of any thereof; or

(b) Receive or collect or permit the receipt or collection of any payment under the Master Lease prior to the date for the payment thereof provided for by the Master Lease or assign, transfer or hypothecate (other than to the Trustee under the Indenture) any revenues or other payment then due or to accrue in the future under the Master Lease in respect of the Projects; or

(c) Sell, mortgage, transfer, assign or hypothecate (other than to the Trustee under the Indenture) its interest in the Projects or any part thereof or interest therein or in any amount to be received by it from the disposition of the Projects except as provided under the Indenture, and except as provided in the Master Lease and the Security Documents.

Power of Attorney in Respect of the Master Lease. The Authority does hereby irrevocably constitute and appoint the Trustee its true and lawful attorney with an interest and full power of substitution, for it and in its name, place and stead (a) to ask, demand, collect, receive and receipt for any and all rents, income and other sums which are assigned under the Granting Clauses of the Indenture, and (b) without limiting the provisions of the foregoing clause (a) hereof, during the continuance of any Event of Default under the Indenture, to exercise any remedies available under the Master Lease and the Security Documents as fully as the Authority could itself do, and to perform all other necessary or appropriate acts with respect to any such remedies, and in its discretion to file any claim or take any other action or proceedings, either in its own name or in the name of the Authority or otherwise, which the Trustee may deem necessary or appropriate to protect and preserve the right, title and interest of the Trustee (but only to the extent specifically provided herein) in the Master Lease and to the Base Rentals, the Additional Rentals, the Purchase Option Price, the Net Proceeds and all other amounts payable under the Master

Lease and other sums and the security intended to be afforded under the Indenture, whether or not the Authority is in default thereunder.

Use of Bond Fund

(a) There shall be deposited into the Bond Fund all accrued interest received, if any, at the time of the issuance, sale and delivery of the Bonds. In addition, there shall be deposited into the Bond Fund, as and when received, (i) any amount directed to be paid into the Bond Fund pursuant to the Master Lease or any amount in the Debt Service Reserve Fund directed to be paid into the Bond Fund in accordance with the provisions of the Indenture; (ii) any Net Proceeds of any insurance policy, performance bond or condemnation award to be deposited in the Bond Fund pursuant to the Master Lease; (iii) all Base Rentals, and, if paid by the City, that portion of the Purchase Option Price attributable to the retirement of the applicable Series of Bonds issued under the Indenture, as specified in the Master Lease; and (iv) all other moneys received by the Trustee under and pursuant to any of the provisions of the Indenture or of the Master Lease which are required or which are accompanied by directions that such moneys are to be paid into the Bond Fund. The Authority hereby covenants and agrees that so long as any of the Bonds issued under the Indenture are Outstanding it will deposit, or cause to be paid to the Trustee for deposit in the Bond Fund for its account, any moneys which are pledged under the Indenture for the payment of the principal of and premium, if any, and interest on the Bonds and which are required to be deposited into the Bond Fund.

(b) Except as provided in the Indenture, moneys in the Bond Fund shall be used solely for the payment of the principal of and premium, if any, and interest on the Bonds and for the redemption of the Bonds prior to maturity.

The Bond Fund shall be in the custody of the Trustee but in the name of the Authority, and the Authority hereby authorizes and directs the Trustee to withdraw sufficient funds from the Bond Fund to pay the principal of and premium, if any, and interest on the Bonds as the same become due and payable, which authorization and direction the Trustee hereby accepts.

Use of Sinking Fund

(a) The Trustee shall apply moneys in the Sinking Fund Account to the retirement of any Term Bonds required to be retired by operation of the Sinking Fund Account under the provisions of and in accordance with the Supplemental Indenture authorizing the issuance of such Term Bonds, either by redemption in accordance with such Supplemental Indenture or, at the direction of the Authority, purchase of such Term Bonds in the open market prior to the date on which notice of the redemption of such Term Bonds is given pursuant to the Indenture, at a price not to exceed the redemption price of such Term Bonds (plus accrued interest which will be paid from moneys in the Bond Fund other than those in the Sinking Fund Account).

(b) On the maturity date of any Term Bonds, the Trustee shall apply the moneys on hand in the Sinking Fund Account for the payment of the principal of such Term Bonds.

Use of Debt Service Reserve Fund

(a) Except as otherwise provided in the Indenture, moneys in the Debt Service Reserve Fund shall at all times be maintained in a total aggregate amount of not less than the sum of the Debt Service Reserve Requirement for all Outstanding Series of Bonds. Each Supplemental Indenture authorizing the issuance of a Series of Bonds shall specify the Debt Service Reserve Requirement of such Series which shall be deposited at such time and in such manner as shall be provided therein. Funds on deposit in the Debt Service Reserve Fund shall be used to make up any deficiencies in the Bond Fund.

(b) If within five (5) Business Days of any Interest Payment Date the moneys held in the Bond Fund are insufficient to pay all interest, premium, if any, and principal then becoming due on the Bonds, the Trustee shall transfer, on or before such date, moneys from the applicable Subaccount within the

Debt Service Reserve Fund to the Bond Fund to the extent necessary so that the amount of money so transferred plus all moneys then held in the Bond Fund shall be sufficient to pay all interest, premium, if any, and principal payments then becoming due and payable on such date; and

(c) In the event that the City shall exercise its option to purchase a Project or Projects and terminate its payment obligations under the Master Lease upon payment of the Purchase Option Price with respect to said Project or Projects, the Trustee shall transfer all moneys held in the Subaccount within the Debt Service Reserve Fund applicable to said Project or Projects to the Bond Fund in accordance with the written direction of the City.

(d) In the event moneys are drawn from the Debt Service Reserve Fund to pay principal, premium or interest on Bonds, such that there shall be remaining in the applicable Subaccount within the Debt Service Reserve Fund an amount less than the Debt Service Reserve Requirement with respect to said Subaccount, the Trustee shall immediately give notice to the Authority and the City of such deficiency. Such Fund shall be replenished to the Debt Service Reserve Requirement upon the deposit by the Trustee of the additional Base Rental payment to be paid by the City pursuant to the Master Lease.

(e) Any moneys remaining in the Debt Service Reserve Fund with respect to a Series of Bonds on the final maturity of said Series of Bonds (whether at stated maturity or upon prior redemption) shall be transferred on such date into the Bond Fund. If the amounts available in the Bond Fund and the Debt Service Reserve Fund with respect to a Series of Bonds are equal at any time to the amount of principal of and interest on said Series of Bonds to maturity, the Trustee shall transfer all such amounts then held in the Debt Service Reserve Fund into the Bond Fund, and such amounts so held in the Bond Fund after such transfer shall be credited against the Base Rentals due thereafter under the Master Lease with respect to said Series of Bonds.

(f) If following the payment of principal and interest due on the Bonds on each Interest Payment Date the moneys held in the Debt Service Reserve Fund exceed the Debt Service Reserve Requirement, all money's in excess of said sum shall be immediately transferred to the Bond Fund. To the extent so paid, such excess shall reduce the amount of the succeeding Base Rental otherwise payable under the Lease.

Use of Construction Fund; Disbursements

The moneys in the Construction Fund shall be expended in accordance with the provisions of the Master Lease and the Supplemental Indenture authorizing the applicable Series of Bonds.

Use of Rebate Fund and Arbitrage Rebate

(a) Should any Series of Bonds be subject to arbitrage rebate, the Trustee shall establish and thereafter maintain, so long as the Bonds are Outstanding, a Rebate Fund and an account therein for each such Series, which shall be held separate and apart from all other funds and accounts established under the Indenture and from all other moneys of the Trustee.

(b) All amounts in the Rebate Fund, including income earned from investment of the fund, shall be held by the Trustee free and clear of the lien of the Indenture. In the event the amount on deposit in the Rebate Fund exceeds the aggregate amount of Rebatable Arbitrage for all Series of Bonds, as verified in writing by an independent public accountant or other qualified professional at the time the Rebatable Arbitrage is determined, less amounts of Rebatable Arbitrage theretofore paid to the United States for all Series of Bonds, the Trustee shall, upon the Authority's request, withdraw from the Rebate Fund and pay to the Authority an amount not to exceed such excess.

(c) The Authority shall determine the amount of Rebatable Arbitrage and the corresponding Required Rebate Deposit with respect to each Series of Bonds on each applicable Rebate Calculation Date. The Authority shall deposit into the Rebate Fund the Required Rebate Deposit, if any, with respect to each Series of Bonds (or instruct the Trustee to transfer to the Rebate Fund moneys representing such Required

Rebate Deposit from the Funds and Accounts held under the Indenture other than the Rebate Fund) within 30 days of each such Rebate Calculation Date. The Authority shall instruct the Trustee to withdraw from the Rebate Fund and pay over to the United States Government with respect to each Series of Bonds: (1) not less frequently than once each five years commencing no later than 60 days after the first Rebate Calculation Date for such Series of Bonds and upon each fifth anniversary of such date, an amount which when added to all previous rebate payments made with respect to such Series of Bonds equals 90% of the sum of the Rebatable Arbitrage pertaining to such Series of Bonds, and (2) not later than 60 days after the retirement of the last Bond of such Series, 100% of the Rebatable Arbitrage with respect to such Series. The determination of Rebatable Arbitrage made with respect to each such payment date and with respect to any withdrawal and payment to the Authority from the Rebate Fund pursuant to the Indenture must be verified in writing by an independent public accountant or other qualified professional.

Moneys to be Held in Trust

All moneys required to be deposited with or paid to the Trustee for account to any fund referred to in any provision of the Indenture or the Master Lease shall be held by the Trustee in trust, and except for moneys deposited with or paid to the Trustee for the payment of Bonds not then deemed Outstanding shall, while held by the Trustee, constitute part of the Trust Estate and be subject to the lien or security interest created by the Indenture.

Investment of Funds

Any moneys held as part of the Construction Fund, the Bond Fund, the Debt Service Reserve Fund, the Rebate Fund, the Repair and Replacement Fund or any other fund shall be invested and reinvested by the Trustee in Investment Obligations at the written direction of the Authority in accordance with the provisions of the Indenture and of the Master Lease. Any such investments shall be held by or under the control of the Trustee. The Trustee shall sell and reduce to cash a sufficient amount of such investments within the Bond Fund whenever the cash balance therein is insufficient to pay the principal of and premium, if any, and interest on the Bonds when due. All income and earnings from the investment of amounts on deposit in any fund shall be retained therein; provided, however, that any moneys held in the Debt Service Reserve Fund in excess of the Debt Service Reserve Requirement shall be transferred to the Bond Fund at least annually.

Method of Valuation and Frequency of Valuation

In computing the amount in any Fund or account, Investment Obligations shall be valued at the fair market value of such Obligations, exclusive of accrued interest. All funds and accounts are to be valued on the basis of a mark-to-market valuation conducted semiannually by the Trustee as of each Interest Payment Date.

Additional Parity Bonds

Refunding Bonds. So long as the Master Lease is in effect and no Event of Default under the Indenture or the Master Lease has occurred and is continuing and so long as no Event of Nonappropriation has occurred and is continuing, one or more Series of Refunding Bonds may be issued, authenticated and delivered for the purpose of refunding Bonds or other obligations of the Authority. Such Additional Bonds shall be payable solely from the Base Rentals and, if paid by the City, the Purchase Option Price and other amounts derived from the leasing of the Project. The Refunding Bonds may be issued in one or more Series, shall be authenticated by the Trustee and, upon payment to the Trustee of the proceeds of said sale of Refunding Bonds, they shall be delivered by the Trustee to or upon the order of the purchasers thereof, but only upon compliance with the provisions of the Indenture with respect to said Series of Refunding Bonds and upon there being filed with the Trustee:

(a) Original executed counterparts of a Supplemental Indenture, a supplement or amendment (if necessary) to the Security Documents and Master Lease providing for the issuance of such Refunding Bonds, and further providing for a revision to the Base Rentals to be paid by the City under the Master Lease to such amount as shall be necessary to pay, assuming that no Event of Default or Event of Nonappropriation shall occur, the principal of, premium, if any, and interest on the Bonds (including the Refunding Bonds being issued and the Initial Bonds and any Additional Bonds and Refunding Bonds theretofore issued and to remain Outstanding), and to extend the Lease Term if the maturity of any of the

Refunding Bonds would otherwise occur after the expiration of the then current Lease Term. The date or dates of the Refunding Bonds, the rate or rates of interest on the Refunding Bonds, and the redemption provisions (if any) with respect thereto all shall be as provided in the Supplemental Indenture; except that interest on such Refunding Bonds shall be payable on _____ and _____ of each year and the principal of such Refunding Bonds shall be payable on _____ of each year during the term thereof except as otherwise provided in the Supplemental Indenture authorizing the Refunding Bonds.

(b) If the Bonds theretofore issued were intended to bear interest which is excluded from gross income, a written opinion of nationally recognized bond counsel, to the effect that the exclusion from gross income of the interest on the Bonds theretofore issued, for federal income tax purposes, will not be adversely affected by the issuance of the Refunding Bonds being issued;

(c) a date-down endorsement to the ALTA mortgagee title insurance policy issued in connection with the issuance of the Bonds being refunded or commitment therefor (or if the bonds or other obligations being refunded were not issued pursuant to the Indenture, an ALTA Mortgagee title insurance policy or commitment therefor), which endorsement or policy shall insure to the date of issuance of such Refunding Bonds and the recording of any supplement or amendment to the Security Documents the continuing validity of the lien thereof, as modified by any supplement or amendment to the Security Documents, as a first and prior lien on the premises thereby secured, subject only to Permitted Encumbrances, and which endorsement or policy shall increase the amount of title insurance coverage thereunder, if necessary, to an amount, which when added to the coverage provided under any other title policies delivered with respect to other Bonds then Outstanding, is at least equal to the aggregate principal amount of all Bonds to be Outstanding following said refunding and naming the Trustee as an insured;

(d) (i) A report of an independent firm of certified public accountants to the effect that, upon the issuance of the Refunding Bonds, moneys and Direct Obligations will be deposited with the Trustee or an escrow agent sufficient to cause the Bonds (or other obligations) being refunded to be deemed paid under the Indenture (or a comparable provision of the documents authorizing the obligations to be refunded); or in the event that the Bonds (or other obligations) to be refunded are to be redeemed on the date of issuance of the Refunding Bonds or within sixty (60) days thereafter, there shall be delivered to the Trustee evidence satisfactory to it that upon the issuance of the Refunding Bonds moneys and Direct Obligations will be deposited with the Trustee or an escrow agent sufficient, without taking into account investment earnings thereon, to redeem the Bonds (or other obligations);

(e) a certificate of the Authority, stating that, as of the date of such delivery, no event or condition has happened or exists and is continuing, or is happening or existing, which constitutes, or which, with notice or lapse of time or both, would constitute, an Event of Default under the Indenture or the Master Lease and there has not occurred and is then continuing an Event of Nonappropriation; provided however that the existence of an Event of Default shall not preclude the issuance of any Refunding Bonds if: (i) the issuance of such Refunding Bonds otherwise complies with the provisions of the Indenture and (ii) any Event of Default will cease to continue upon the issuance of such Refunding Bonds and the application of the proceeds thereof.

Each Series of Refunding Bonds issued pursuant to the Indenture shall be equally and ratably secured under the Indenture with the Initial Bonds and all other Series of Refunding Bonds and Additional Bonds, if any, theretofore issued pursuant to the Indenture, without preference, priority or distinction of any Bonds over any other thereof.

Additional Bonds. So long as the Master Lease is in effect and no Event of Default under the Indenture or the Master Lease has occurred and is continuing and so long as no Event of Nonappropriation has occurred and is continuing, one or more Series of Additional Bonds may be issued, authenticated and delivered for the purpose of financing Costs of Acquisition and Construction of a Project or Projects. Such Additional Bonds shall be payable solely from the Base Rentals and, if paid by the City, the Purchase Option Price and other amounts derived from the leasing of the Projects. The Additional Bonds may be issued in one or more Series, shall be authenticated by the Trustee and, upon payment to the Trustee of the proceeds of said sale of Additional Bonds, they shall be delivered

by the Trustee to or upon the order of the purchasers thereof, but only upon compliance with the Indenture with respect to said Series of Additional Bonds and upon there being filed with the Trustee:

(a) Original executed counterparts of a Supplemental Indenture, a supplement or amendment (if necessary) to the Security Documents and Master Lease providing for the financing of a Project and for the issuance of the Additional Bonds and further providing for an increase in the Base Rentals to be paid by the City under the Master Lease in such amount as shall be necessary to pay, assuming that no Event of Default or Event of Nonappropriation shall occur, the principal of, premium, if any, and interest on the Bonds (including the Additional Bonds being issued and the Initial Bonds and any Additional Bonds and Refunding Bonds theretofore issued and Outstanding), and to extend the Lease Term if the maturity of any of the Additional Bonds would otherwise occur after the expiration of the then current Lease Term. The date or dates of the Additional Bonds, the rate or rates of interest on the Additional Bonds, and the redemption provisions (if any) with respect thereto all shall be as provided in the Supplemental Indenture, except that interest on such Additional Bonds shall be payable on _____ and _____ of each year during the term thereof and principal of the Additional Bonds shall, in each year in which principal falls due, be payable on _____ except as otherwise provided in the Supplemental Indenture authorizing the Series of Additional Bonds;

(b) If the Bonds theretofore issued were intended to bear interest which is excluded from gross income, a written opinion of nationally recognized bond counsel, to the effect that the exclusion from gross income of the interest on the Bonds theretofore issued, for federal income tax purposes, will not be adversely affected by the issuance of the Additional Bonds being issued;

(c) A date-down endorsement to the ALTA mortgagee title insurance policy issued in connection with the issuance of the Initial Bonds (or other Bonds) or commitment therefor or an additional ALTA mortgagee title insurance policy or commitment therefor, which endorsement or policy shall insure to the date of issuance of such Additional Bonds and the recording of any supplement to the Security Documents, if required, the continuing validity of the lien thereof, as modified by any supplement to the Security Documents, as a first and prior lien on the premises thereby secured, subject only to Permitted Encumbrances, and which endorsement or additional policy shall increase the amount of title insurance coverage thereunder to an amount at least equal to the aggregate principal amount of the Additional Bonds to be issued (or in the case of Additional Bonds issued to complete or extend a Project previously financed under the Indenture the endorsement to the original policy for such Project shall increase the coverage to at least the aggregate principal amount of Bonds issued for such Project to be Outstanding upon the issuance of such Additional Bonds) and naming the Trustee as an insured. In the event that the property upon which additional projects are to be located has not been acquired at or prior to the time of issuance of the Additional Bonds, the amendment to the Master lease relating to such Additional Bonds shall require that such endorsement or additional title policy with respect to such property be delivered at the time of or prior to any disbursements being made from the Construction Fund with respect to such portion of the Project;

(d) if such Series of Additional Bonds is being issued in whole or in part for construction purposes, (i) a copy, duly certified by the Secretary of the Authority, of the project contract and architect's agreement with respect to such construction and the performance and payment bond covering such contract or, in the alternative, a requirement that a copy of such documents be delivered to the Trustee prior to the time that moneys are withdrawn from the Construction Fund with respect to such portions of the Project, and (ii) a certificate of the architect or engineer responsible for planning and designing any such construction which sets forth the estimated useful life of the Project or Projects, as so improved and extended, in compliance with Section 17A-3-904 of the Act; and

(e) a certificate of the Authority, stating that as of the date of such delivery no event or condition has happened or exists and is continuing, or is happening or existing, which constitutes, or which, with notice or lapse of time or both, would constitute, an Event of Default under the Indenture or the Master Lease and there has not occurred and is then continuing an Event of Nonappropriation; provided however that the existence of an Event of Default shall not preclude the issuance of any Additional Bonds if: (i) the issuance of such Additional Bonds otherwise complies with the provisions of the Indenture and

(ii) any Event of Default will cease to continue upon the issuance of such Additional Bonds and the application of the proceeds thereof.

Each Series of Additional Bonds issued pursuant to the Indenture shall be equally and ratably secured under the Indenture with the Initial Bonds and all other Series of Additional Bonds and Refunding Bonds, if any, theretofore issued pursuant to the Indenture, without preference, priority or distinction of any Bonds over any other thereof.

Discharge of Lien

If the Authority shall pay or cause to be paid, or there shall be otherwise paid or unconditional provisions for payment made to or for the Bondholders, the principal of and premium, if any, and interest due or to become due on the Bonds at the times and in the manner stipulated therein, and shall pay or cause to be paid to the Trustee and any paying agents all sums of money due or to become due according to the provisions hereof, then these presents and the estate and rights hereby granted shall cease, terminate and be void, whereupon the Trustee shall cancel and discharge the lien of the Indenture, and release, assign and deliver unto the Authority and the City any and all the estate, right, title and interest in and to any and all rights assigned to the Trustee or otherwise subject to the lien of the Indenture, including amounts in the Bond Fund and the Debt Service Reserve Fund and all rights granted under the Security Documents, except moneys or securities held by the Trustee for the payment of the principal of and premium, if any, and interest on the Bonds.

Any Bond shall be deemed to be paid for all purposes of the Indenture when (a) payment of the principal of and the applicable redemption premium, if any, on such Bond, plus interest thereon to the due date thereof (whether such due date be by reason of maturity or upon redemption as provided in the Indenture, or otherwise), either (i) shall have been made or caused to be made in accordance with the terms thereof, or (ii) shall have been provided by irrevocably depositing with or for the benefit of the Trustee, in trust, and the Trustee shall have irrevocably set aside exclusively for such payment, (1) moneys sufficient to make such payment, and/or (2) Direct Obligations maturing as to principal and interest in such amount and at such times as will insure, without reinvestment, the availability of sufficient moneys to make such payment, and (b) all necessary and proper fees, compensation and expenses of the Trustee and any paying agents pertaining to the Bonds with respect to which such deposit is made shall have been paid or the payment thereof provided for to the satisfaction of the Trustee. At such time as a Bond shall be deemed to be paid under the Indenture, as aforesaid, it shall no longer be secured by or entitled to the benefits of the Indenture, except for the purposes of any such payment from such moneys or Direct Obligations.

Notwithstanding the foregoing, no deposit under clause (a)(ii) of the immediately preceding paragraph shall be deemed a payment of such Bonds as aforesaid until: (a) proper notice of redemption of such Bonds shall have been previously given in accordance with the Indenture, or in the event said Bonds are not by their terms subject to redemption within the next succeeding sixty days, until the Authority shall have given the Trustee, in form satisfactory to the Trustee, irrevocable instructions to notify, as soon as practicable, the Bondholders of the Bonds, in accordance with the redemption provisions of the Indenture, that the deposit required by (a)(ii) above has been made with or for the benefit of the Trustee and that said Bonds are deemed to have been paid in accordance with the general covenants of the Indenture, and stating such maturity or redemption date upon which moneys are to be available for the payment of the principal or redemption price, if applicable, on said Bonds and to call for redemption pursuant to the Indenture any Bonds to be redeemed prior to maturity; or (b) the maturity of such Bonds.

All moneys so deposited with or for the benefit of the Trustee as provided in the Indenture may at the direction of the Authority also be invested and reinvested in Direct Obligations, maturing in the amounts and at times as set forth in the Indenture, and all income from all Direct Obligations pursuant to the Indenture which is not required for the payment of the Bonds and interest and premium, if any, thereon with respect to which such moneys shall have been so deposited, shall be deposited in the Bond Fund as and when realized and collected for use and application as are other moneys deposited in that fund.

The Authority hereby covenants that no deposit will be made under the Indenture and no use made of any such deposit which would cause the Bonds to be treated as arbitrage bonds within the meaning of Section 148 of the Code.

Notwithstanding any other provision of the Indenture, all moneys or Direct Obligations set aside and held in trust pursuant to the provisions of the Indenture regarding the discharge of the lien for the payment of Bonds (including interest and premium thereon, if any) shall be applied to and used solely for the payment of the particular Bonds (including interest and premium thereof, if any) with respect to which such moneys and Direct Obligations have been so set aside in trust.

Events of Default

Any of the following events constitute an "Event of Default" under the Indenture:

(a) Failure to pay when due interest on any Bond;

(b) Failure to pay when due the principal of, or premium, if any, on any Bond, whether at the stated maturity thereof, or upon proceedings for redemption thereof;

(c) Failure to perform or observe any other of the covenants, agreements or conditions on the part of the Authority in the Indenture or in the Bonds contained and failure to remedy the same after notice thereof pursuant to the Indenture;

(d) The occurrence of an event of default under the terms of any of the Bond Documents on the part of either the Authority or the City;

(e) The Authority shall for any reason be rendered incapable of fulfilling its obligations under the Indenture;

(f) The Authority (1) is adjudged insolvent by a court of competent jurisdiction, (2) admits in writing its inability to pay its debts generally as they become due, (3) files a petition in bankruptcy, (4) makes an assignment for the benefit of creditors, or (5) consents to the appointment of a receiver of itself or property with respect to the Projects;

(g) An order, judgment or decree shall be entered by any court of competent jurisdiction appointing, without the consent of the Authority, a receiver of the Authority or of the property with respect to the Projects, and such order, judgment or decree shall not be vacated or set aside or stayed within sixty days from the date of such appointment;

(h) A court of competent jurisdiction shall enter an order, judgment or decree approving a petition filed against the Authority under the provisions of any bankruptcy act and such order, judgment or decree shall not be vacated or set aside or stayed within sixty days from the date of entry of such order, judgment or decree;

(i) Under the provisions of any other law now or hereafter existing for the relief or aid of debtors, any court of competent jurisdiction shall assume custody or control of the Authority or of the property with respect to the Projects or any part thereof, and such custody or control shall not be terminated within sixty days from the date of assumption of such custody or control; or

(j) Subject to the limitations contained in the Master Lease, the Authority shall unreasonably delay or fail to carry on with reasonable dispatch, or shall discontinue construction of any substantial part of a Project.

Acceleration, Limitation on Remedies

Upon the occurrence and continuation of an Event of Default, the Trustee shall have all the rights and remedies with respect to the Trust Estate as the Authority, as lessor, has against the Projects and the City under the pertinent provisions of the Master Lease; and the Trustee may, and upon the written request of Bondholders of not less than 25% in aggregate principal amount of the Bonds Outstanding shall, by notice in writing delivered to the Authority, declare the principal of all Bonds then Outstanding and the interest accrued thereon immediately due and

payable, and such principal and interest shall thereupon become and be immediately due and payable without further action. Such amounts of principal and interest shall bear interest from the date of acceleration, as provided in the Indenture, until paid at the same rate borne by the accelerated Bonds prior to acceleration.

Upon any sale made either under the power of sale given granted under the Indenture or given in the Security Documents or under a judgment, order or decree made in any judicial proceedings for the foreclosure or enforcement of the Indenture and/or the Security Documents, the principal of all Bonds then outstanding, if not previously due, shall at once become and be immediately due and payable without declaration or notice by the Trustee or the Bondholders.

Notwithstanding anything to the contrary contained in the Indenture, no deficiency judgment upon foreclosure of the lien of the Indenture or of the Security Documents against the Projects may be entered against the City or the Authority, and no breach of any provision of the Master Lease, the Security Documents or the Indenture shall impose any general obligation or liability upon or a charge against the City or the Authority or upon the general credit or taxing powers of the City. Additionally, no judgment requiring a payment of money may be entered against the City by reason of an Event of Default or an Event of Nonappropriation under the Master Lease; provided to the extent permitted by law that the Trustee may, subject to compliance with the applicable provisions of the "one action rule" set forth in Title 78, Chapter 37, Utah Code Annotated 1953, as amended, recover from the City: (i) the portion of Base Rentals and Additional Rentals which are or would otherwise have been payable under the Master Lease during any period in which the City continues to use, occupy and operate a Project or Projects or any portion thereof; and (ii) Base Rentals and Additional Rentals which are or would otherwise have been payable by the City under the Master Lease during the remainder, after the City vacates the applicable Project or Projects, of the then current annual term of the Master Lease in which such Event of Default occurs for which term the City had lawfully appropriated moneys for purposes of paying such Base Rentals and Additional Rentals; provided, however, that if the Trustee does not proceed to sell the Project or Projects reasonably promptly after such Event of Default, the Trustee shall be obligated to the City to use the Trustee's best efforts to lease or sublease said Project or Projects for the remainder of such annual term, and the Net Proceeds of such leasing shall be offset against the amount recoverable from the Lessee under this clause (ii).

Notwithstanding anything in the Indenture to the contrary, the rights and privileges of the Trustee and the Bondholders are subject to the right of the City to purchase the Project or Projects as set forth in the Master Lease and the Trustee shall make no final sale or other final disposition of any interest in said Project or Projects pursuant to any available foreclosure remedy without notifying the City in writing of the occurrence of an Event of Default, and allowing the City ninety days from the mailing of such notice to exercise its option to purchase the Project or Projects.

Surrender of Possession of Projects; Rights and Duties of Trustee in Possession

Subject to the provisions of the Indenture, upon the occurrence and continuation of an Event of Default under the Indenture, the Authority, upon demand of the Trustee, shall forthwith surrender, and it shall be lawful for the Trustee, by such officer or agent as it may appoint, to take possession of all or any part of the Projects together with the books, papers and accounts of the Authority pertaining thereto, and including the rights and the position of the Authority with respect to the Projects under the Master Lease and to make all needful repairs and improvements as the Trustee shall deem wise. Upon the occurrence and continuation of an Event of Default, the Trustee may execute a written notice of default and an election to cause the Authority's interest in the Projects or any portion thereof to be sold (subject to any reversionary rights of the City which may be retained in the Project site or sites in the event any ground lease may be executed between the Authority and the City) to satisfy the obligations of the Authority under the Indenture in accordance with the provisions of the Security Documents and/or may cause a sale of personal property as provided by law. The Trustee may also lease or otherwise dispose of the Authority's interest in the Projects in the name and for the account of the Authority and in such manner as the Trustee, in its sole discretion, may elect. In connection with any such sale or leasing of the Projects, the Trustee may collect, receive and sequester the rental payments, revenues, earnings, income, products and profits therefrom, and out of the same and any moneys received from any receiver pay, or set up the proper reserve for the payment of, all proper costs and expenses of so taking, holding, leasing, selling and managing the same, including reasonable compensation to the Trustee, its agents and counsel, and any charges of the Trustee under the Indenture, and any taxes and assessments and other charges prior to the lien of the Indenture and the Security Documents which the Trustee may deem it wise

to pay, and all expenses of such repairs and improvements, and apply the remainder of the moneys so received in accordance with the provisions of the Indenture. Whenever all that is due upon the Bonds shall have been paid and all defaults made, cured or waived, the Trustee shall surrender whatever possession the Trustee shall retain to the Authority; the same right of entry, however, to exist upon any subsequent Event of Default.

While in possession of such property the Trustee shall render annually to the Authority, the City and the Bondholders, at their addresses set forth in the registration book required by the Indenture, a summarized statement of income and expenditures in connection therewith.

While any Bonds are Outstanding, the Authority shall not exercise any of the remedies on default specified in the Master Lease without the prior written consent of the Trustee.

Other Remedies; Rights of Bondholders

Except as otherwise limited by the provisions of the Indenture, upon the occurrence of an Event of Default under the Indenture, the Trustee may, upon being satisfactorily indemnified, pursue any available remedy that it deems to be in the best interest of the Bondholders by suit at law or in equity to enforce the payment of the principal of and premium, if any, and interest on the Bonds then Outstanding.

If an Event of Default shall have occurred under the Indenture, and if requested so to do by the Bondholders of 25% in aggregate principal amount of Bonds then Outstanding and indemnified as provided in the Indenture, the Trustee shall be obligated to exercise such one or more of the rights and powers conferred by the Indenture, as the Trustee, being advised by counsel, shall deem most expedient in the interests of the Bondholders.

No remedy by the terms of the Indenture conferred upon or reserved to the Trustee (or the Bondholders) is intended to be exclusive of any other remedy, but each and every such remedy shall be cumulative and shall be in addition to any other remedy given to the Trustee or to the Bondholders hereunder or now or hereafter existing at law or in equity.

No delay or omission to exercise any right or power accruing upon any default or Event of Default under the Indenture shall impair any such right or power or shall be construed to be a waiver of any such default or Event of Default or acquiescence therein; and such right and power may be exercised from time to time as often as may be deemed expedient. Every power or remedy given by the Indenture, the Master Lease or the Security Documents or to which the Trustee may be otherwise entitled, may be exercised, concurrently or independently, from time to time and as often as may be deemed expedient by the Trustee, and the Trustee may pursue inconsistent remedies.

No waiver of any default or Event of Default hereunder, whether by the Trustee or by the Bondholders, shall extend to or shall affect any subsequent default or Event of Default or shall impair any rights or remedies consequent thereon.

Right of Bondholders to Direct Proceedings

The Bondholders of a majority in aggregate principal amount of the Bonds then Outstanding shall have the right, at any time, by an instrument or instruments in writing executed and delivered to the Trustee, to direct the method and place of conducting all proceedings to be taken in connection with the enforcement of the terms and conditions of the Indenture, or for the appointment of a receiver or any other proceedings authorized under the Indenture; provided that such direction shall not be otherwise than in accordance with the provisions of law and of the Indenture.

Appointment of Receivers

Upon the occurrence of an Event of Default under the Indenture and upon the filing of a suit or other commencement of judicial proceedings to enforce the rights of the Trustee and of the Bondholders under the Indenture, the Trustee shall be entitled to the appointment of a receiver or receivers of the Trust Estate and of the rents, revenues, earnings, income, products and profits thereof, pending such proceedings, with such powers as the court making such appointment shall confer.

Waiver

Upon the occurrence of an Event of Default under the Indenture, to the extent that such rights may then lawfully be waived, neither the Authority, nor anyone claiming through or under it, shall set up, claim or seek to take advantage of any appraisement, valuation, stay, extension or redemption laws now or hereafter in force, in order to prevent or hinder the enforcement of the Indenture, and the Authority, for itself and all who may claim through or under it, pursuant to the Indenture waives, to the extent that it lawfully may do so, the benefit of all such laws.

Rights and Remedies of Bondholders

No Bondholder shall have any right to institute any suit, action or proceeding at law or in equity for the enforcement of the Indenture or for the execution of any trust under the Indenture or for the appointment of a receiver or any other remedy thereunder, unless a default has occurred of which the Trustee has been notified as provided in the Indenture, or of which by said subsection it is deemed to have notice, nor unless also such default shall have become an Event of Default under the Indenture and the Bondholders of 25% in aggregate principal amount of Bonds then Outstanding shall have made written request to the Trustee and shall have offered it reasonable opportunity either to proceed to exercise the powers hereinbefore granted or to institute such action, suit or proceeding in their own name or names, nor unless also they have offered to the Trustee indemnity as provided in the Indenture, nor unless the Trustee shall thereafter fail or refuse to exercise the powers granted to the Trustee under the Indenture, or to institute such action, suit or proceeding in its own name; and such notification, request and offer of indemnity are hereby declared in every case at the option of the Trustee to be conditions precedent to the execution of the powers and trusts of the Indenture, and to any action or cause of action for the enforcement of the Indenture, or for the appointment of a receiver or for any other remedy under the Indenture; it being understood and intended that no one or more Bondholders shall have any right in any manner whatsoever to affect, disturb or prejudice the lien of the Indenture by its, his, her or their action or to enforce any right thereunder except in the manner therein provided, and that all proceedings at law or in equity shall be instituted, had and maintained in the manner as provided in the Indenture and for the equal and ratable benefit of the Bondholders of all Bonds then Outstanding. However, nothing contained in the Indenture shall affect or impair the right of any Bondholder to enforce the payment of the principal of and premium, if any, and interest on any Bond at and after the maturity thereof or the redemption date established therefor, or the obligation of the Authority to pay the Bonds issued thereunder to the respective Bondholders thereof at the time, place, from the source and in the manner in the Bonds expressed.

Waiver of Event of Default

The Trustee may, and upon the written direction of the Bondholders of a majority in principal amount of the Bonds then Outstanding shall, waive any Event of Default under the Indenture and its consequences and rescind any declaration of maturity of the principal of the Bonds; provided, however, that there shall not be waived (1) any Event of Default under the Indenture in the payment of the principal of any Outstanding Bonds at the date of maturity specified therein, or (2) any Event of Default in the payment when due of the interest on any such Bonds, unless prior to such waiver or rescission, all arrears of interests (including interest on overdue installments of interest) or all arrears of payments of principal when due, as the case may be, both with interest at the same rate as the rate of the respective Bond or Bonds which are past due, and all expenses of the Trustee, in connection with such Event of Default shall have been paid or provided for, and in cases of any such waiver or rescission, or in case any proceeding taken by Trustee on account of any such Event of Default shall have been discontinued or abandoned or determined adversely, then and in every such case the Authority, the Trustee and the Bondholders shall be restored to their former positions and rights under the Indenture respectively, but no such waiver or rescission shall extend to any subsequent or other Event of Default, or impair any right consequent thereon.

Notice of Events of Default; Opportunity of the Authority and the City to Cure Such Events of Default

Notwithstanding any provision in the Indenture to the contrary, failure to perform or observe any of the covenants, agreements or conditions on the part of the Authority under the Indenture or in the Bonds shall not constitute an Event of Default under the Indenture until actual notice of such default by registered or certified mail shall be given to the Authority and the City by the Trustee or by the Bondholders of not less than 25% in aggregate principal amount of all Bonds Outstanding, and the Authority and the City shall have had thirty days after receipt of

such notice to correct said default or cause said default to be corrected, and shall not have corrected said default or caused said default to be corrected within the applicable period; provided, however, that, if said default be such that it cannot be corrected within the applicable period, it shall not constitute an Event of Default under the Indenture if corrective action is instituted by the Authority and the City within the applicable period and diligently pursued, to the satisfaction of the Trustee until the default is corrected.

Limitation on Remedies and Acceleration During Acquisition and Construction of Portions of Projects

Notwithstanding the provisions of the Indenture or of the Security Documents to the contrary, in the event that (a)(i) a portion of the Projects (the "Completed Portion of the Projects") financed with a separate Series of Bonds is accepted by the City for use and occupancy under the Master Lease, and (ii) the acquisition and construction of additional portions of the Projects (the "Uncompleted Portion of the Projects") financed with one or more Series of Bonds (other than the Series of Bonds described in (i) above) have yet to be completed, and (b) an Event of Default occurs due to the failure to complete the Uncompleted Portion of the Projects, the following limitations shall apply:

(a) Such Event of Default shall be limited to the Series of Bonds issued to finance the Uncompleted Portion of the Projects and not the Series of Bonds issued to finance the Completed Portion of the Projects;

(b) The City shall, subject to the occurrence of an Event of Nonappropriation, continue to pay Base Rentals and Additional Rentals with respect to the Completed Portion of the Projects, and the Master Lease shall remain in full force and effect with respect to the Completed Portion of the Projects;

(c) The Trustee shall use the amounts on deposit in the related subaccount of the Debt Service Reserve Fund to pay amounts due on the Series of Bonds issued to finance the Uncompleted Portion of the Projects and amounts on deposit in the subaccount of the Debt Service Reserve Fund relating to the Series of Bonds issued to finance the Completed Portion of the Projects shall not be used to pay amounts due on the Series of Bonds issued to Finance the Uncompleted Portion of the Projects;

(d) The Series of Bonds issued to finance the Completed Portion of the Projects shall not be accelerated or otherwise affected by the Event of Default described in the Indenture; and

(e) The Trustee shall not proceed to exercise any remedies under the Indenture or the Security Documents relating to the Completed Portion of the Projects with respect to the Event of Default described in the Indenture.

Supplemental Indentures Not Requiring Consent of Bondholders

The Authority and the Trustee may, without consent of, or notice to, any of the Bondholders enter into an indenture or indentures supplemental to the Indenture which shall not be inconsistent with the general terms and provisions hereof for any one or more of the following purposes:

(a) To cure any ambiguity or formal defect or omission in the Indenture;

(b) To grant to or confer upon the Trustee for the benefit of the Bondholders any additional rights, remedies, powers or authority that may lawfully be granted to or conferred upon the Bondholders or the Trustee;

(c) To subject to the Indenture additional revenues, properties or collateral;

(d) To modify, amend or supplement the Indenture or any indenture supplemental hereto in such matter as to permit the qualification hereof and thereof under the Trust Indenture Act of 1939, as amended, or any similar federal statute hereafter in effect or to permit the qualification of the Bonds for sale under the securities laws of any of the states of the United States of America;

(e) To evidence the appointment of a separate or a Co-Trustee or paying agent or the succession of a new Trustee or paying agent under the Indenture;

(f) To issue the Initial Bonds, Refunding Bonds or Additional Bonds in accordance with the Indenture and the Master Lease; and

(g) To make any other change which, in the judgment of the Trustee, is not materially prejudicial to the interests of the Bondholders or the Trustee and that does not materially adversely affect the rights of any Bondholder.

Supplemental Indentures Requiring Consent of Bondholders

Exclusive of supplemental indentures covered by the Indenture and subject to the terms and provisions contained in the Indenture, and not otherwise, the Bondholders of not less than 66 2/3% in aggregate principal amount of the Bonds then Outstanding shall have the right, from time to time, anything contained in the Indenture to the contrary notwithstanding, to consent to and approve the execution by the Authority and the Trustee of such Supplemental Indentures hereto as shall be deemed necessary and desirable by the Authority for the purpose of modifying, altering, amending, adding to or rescinding, in any particular, any of the terms or provisions contained in the Indenture or in any Supplemental Indenture; provided, however, that nothing in the Indenture contained shall permit, or be construed as permitting, (i) an extension of the maturity of the principal of, or the interest on, any Bond issued under the Indenture, or (ii) a reduction in the principal amount of, or redemption premium on, any Bond or the rate of interest thereon, or (iii) a privilege or priority of any Bond or Bonds over any other Bond or Bonds, or (iv) a reduction in the aggregate principal amount of the Bonds required for consent to such Supplemental Indentures, or (v) permit the creation of any lien ranking prior to or on a parity with the lien of the Indenture and the Security Documents on the Trust Estate or any part thereof (except in connection with the issuance of Refunding Bonds or Additional Bonds), or (vi) deprive the Bondholder of any Bond then Outstanding of the lien created by the Indenture on any material portion of the Trust Estate, without the prior consent of the Bondholders of 100% of the Bonds affected by such action. The Trustee may, but shall not be obligated to, enter into any such Supplemental Indenture which adversely affects the Trustee's rights, deeds or immunities under the Indenture or the Master Lease.

If the Bondholders of not less than 66 2/3% in aggregate principal amount of the Bonds Outstanding at the time of the execution of any such Supplemental Indenture shall have consented to and approved the execution thereof as provided in the Indenture, no holder of any Bond shall have any right to object to any of the terms and provisions contained therein, or the operation thereof, or in any manner to question the propriety of the execution thereof, or to enjoin or restrain the Trustee or the Authority from executing the same or from taking any action pursuant to the provisions thereof. Upon the execution of any such Supplemental Indenture as permitted and provided in the Indenture, the Indenture shall be and be deemed to be modified and amended in accordance therewith.

Anything therein to the contrary notwithstanding, so long as no Event of Default or Event of Nonappropriation with respect to the Projects shall have occurred and be continuing under the Master Lease, a Supplemental Indenture shall not become effective unless and until the City shall have consented to the execution and delivery of such Supplemental Indenture. In this regard and except with respect to Supplemental Indentures for which the City has otherwise been notified, the Trustee shall cause notice of the proposed execution of any such Supplemental Indenture together with a copy of the proposed Supplemental Indenture to be mailed by certified or registered mail to the City at least fifteen days prior to the proposed date of execution and delivery of any such Supplemental Indenture. The City shall be deemed to have consented to the execution and delivery of any such Supplemental Indenture if the Trustee does not receive a letter of protest or objection thereto signed by or on behalf of the City on or before the fifteenth day after the mailing of said notice.

Amendments of the Master Lease

<u>Amendments, etc., to the Master Lease Not Requiring Consent of the Bondholders</u>. The Authority and the Trustee shall without the consent of or notice to the Bondholders consent to any amendment, change or modification of the Master Lease as may be required (i) by the provisions of the Indenture and the Master Lease (including those provisions applicable to the issuance of the Initial Bonds, Refunding Bonds and Additional Bonds), (ii) for the

purpose of curing any ambiguity or formal defect or omission, (iii) so as to more precisely identify the Projects, or the Project sites or substitute or add additional improvements or equipment to the Projects or additional rights or interests in property acquired in accordance with the provisions of the Master Lease, (iv) in connection with any amendment to the Indenture pursuant to the provisions of the Indenture governing amendments to the Supplemental Indenture not requiring consent of the Bondholders, or (v) in connection with any other change therein which, in the judgment of the Trustee is not to the prejudice of the Trustee or the holders of the Bonds.

Amendments, etc., to the Master Lease Requiring Consent of the Bondholders. Except for the amendments, changes or modifications as provided in the preceding paragraph, neither the Authority nor the Trustee shall consent to any other amendment, change or modification of the Master Lease without mailing of notice and receipt of the written approval or consent of the holders of not less than 66 2/3% in aggregate principal amount of the Bonds at the time outstanding as provided in the Indenture. If at any time the Authority and the City shall request the consent of the Trustee to any such proposed amendment, change or modification of the Master Lease, the Trustee shall, upon being satisfactorily indemnified with respect to expenses, cause notice of such proposed amendment, change or modification to be given in the same manner as provided by the provisions of the Indenture with respect to Supplemental Indentures requiring consent of the Bondholders. Such notice shall briefly set forth the nature of such proposed amendment, change or modification and shall state that copies of the instrument embodying the same are on file at the principal office of Trustee for inspection by all holders of the Bonds. No such amendment, change or modification of the Master Lease shall reduce the aggregate principal amount of the Bonds the Bondholders of which are required to consent to any amendment, change or modification of such Master Lease, or materially reduce or postpone payments required to be made under the Master Lease without the consent of all of the holders of the Bonds Outstanding. Approval or consent shall be evidenced in a manner acceptable to the Trustee and the Authority.

[Provisions Relating to Bond Insurance]

THE MASTER LEASE

Definitions

"Act" means collectively, the Building Authority Act, the Nonprofit Corporation Act and, to the extent applicable, the Refunding Bond Act.

"Additional Rentals" means the cost of all taxes, insurance premiums and expenses payable by, and fees of, the Trustee and its counsel with respect to the Bonds and other charges and costs which the City assumes or agrees to pay exclusively from City Funds under the Master Lease, together with all interest and penalties that may accrue thereon in the event that the City shall fail to pay the same, as specifically set forth herein.

"Authority Representative" means the person or persons at any time designated to act on behalf of the Authority for purposes of performing any act on behalf of the Authority with respect to a Project by a written certificate furnished to the City and the Trustee containing the specimen signature of such person or persons and signed on behalf of the Authority by any duly authorized officer of the Authority. Such certificate may designate an alternate or alternates. The Authority Representative may be an officer or employee of the Authority or the City.

"Base Rentals" means the payments, pledged to the payment of debt service on the Bonds and to the replenishment of the Debt Service Reserve Fund under the Indenture, payable by the City exclusively from City Funds pursuant to the Master Lease during the Original Term and any applicable Renewal Term hereof, which constitute the payments payable by the City for and in consideration of the right of use of the Projects during such Original Term and applicable Renewal Terms and the purchase option granted herein.

"Building Authority Act" means the Utah Municipal Building Authority Act, Title 17A, Chapter 3, Part 9, Utah Code Annotated 1953, as amended.

"Business Day" means a legal business day on which banking business is transacted in the city in which the Trustee or Paying Agent has its principal corporate trust office.

"City" means West Valley City, Salt Lake County, Utah, a political subdivision and body corporate and politic duly established and existing under and by virtue of the Constitution and laws of the State, and any entity succeeding to its rights and obligations under the Master Lease. Any reference to the "governing body" of the City shall refer to the City Council of West Valley City, Salt Lake County, Utah and to any successor governing body as authorized by applicable law.

"City Funds" means all revenues, receipts and other legally available moneys, including, without limitation, (i) payments received by the City from operation of the Projects, (ii) amounts representing capitalized interest during the construction of a Project and (iii) moneys derived from ad valorem property taxes and other taxes, all to the extent the same are budgeted and appropriated by the governing body of the City for the purpose of paying Base Rentals, Additional Rentals or the Purchase Option Price hereunder during the Original or any Renewal Term in which the Master Lease may be in effect.

"City Representative" means the person at any time designated to act on behalf of the City for purposes of performing any act with respect to a Project by a written certificate furnished to the Authority and the Trustee containing the specimen signature of such person and signed on behalf of the City by the Mayor of the City Council or any duly authorized officer thereof. Such certificate may designate an alternate or alternates. The City Representative may be an officer or employee of the Authority or the City.

"Completion Date" means the date of completion of construction of a Project, within the meaning of Section 17A-3-906 of the Building Authority Act, and of final acceptance by the City of such Project as provided in the Master Lease.

"Costs of Acquisition and Construction" means:

1. obligations of the City or the Authority incurred for labor, materials and equipment in connection with a Project;

2. the cost of payment, performance or other bonds and any and all types of insurance (including but not limited to title insurance) that may be necessary or appropriate to have in effect during the course of a Project;

3. all costs of planning and designing a Project, including architectural, planning, engineering, legal and fiscal advisors' fees and the costs incurred by the City or the Authority for test borings, surveys, estimates, plans and specifications and preliminary investigations therefor, and for supervising construction, as well as for the performance of all other duties required by or consequent to the proper and timely completion of such Project;

4. payment of expenses incurred in seeking to enforce any remedy against any contractor or subcontractor in respect of any default under a contract relating to the acquisition and construction of a Project;

5. the cost of equipment and furnishings for a Project, the cost of acquiring a site for a Project (or any interest therein) and all other costs authorized by the Building Authority Act which are considered to be a part of the costs of a Project in accordance with generally accepted accounting principles, including but not limited to interest accruing on the Bonds during the period required to complete the acquisition and construction of such Project and for not more than twelve (12) months after the Completion Date;

6. any sums required to reimburse the Authority or the City for advances by either of them for any of the above items or for any other costs incurred and for work done by either of them which are properly chargeable to a capital account in respect of a Project;

7. such amounts as the governing body of the Authority shall find to be necessary to provide necessary working capital in connection with a Project; and

8. all expenses connected with the authorization, sale and issuance of a series of Bonds and the refunding of any Bonds, including the initial fees of the Trustee, escrow agent, rating agency fees, bond insurance premiums, fees for outside attorneys or accountants, whose opinions are required to obtain the issuance of the Bonds, financial advisors' fees and commissions and printing costs, those amounts as the Authority shall find

necessary to establish reserves and maintenance, repair, replacement, and contingency funds and accounts, and the interest on Bonds for a reasonable time prior to, during, and for a reasonable period of time after completion of a Project.

"Maverik Center" means the multipurpose sports and entertainment facility and related improvements as described in the Master Lease.

"Event of Default" means one or more events of default as defined in the Master Lease.

"Event of Nonappropriation" means a failure by the City to renew the Master Lease by failing or refusing to budget and appropriate sufficient City Funds for the payment of all or any part of the Base Rentals and Additional Rentals for any Renewal Term hereof as set forth in the Master Lease. The existence or nonexistence of an Event of Nonappropriation shall be determined as of the date on which the governing body of the City fails or refuses to adopt a final budget in accordance with applicable law which appropriates sufficient moneys to pay such Base Rentals and reasonably estimated Additional Rentals for the next succeeding Renewal Term as contemplated by the Master Lease or on any earlier or later date on which the Trustee receives written notice from the City that the governing body of the City has failed or refused to make such appropriations and the term of the Master Lease will not be renewed; provided, however, that the Trustee may waive any Event of Nonappropriation which is cured by the City within a reasonable time if, in the Trustee's judgment, such waiver is in the best interests of the Bondholders, except as otherwise provided in the Master Lease. Notwithstanding anything in the Master Lease to the contrary, the City's failure or refusal to adopt a final budget in accordance with applicable law within the time provided by the Master Lease which appropriates sufficient moneys to pay such Base Rentals and reasonably estimated Additional Rentals for the next succeeding Renewal Term shall constitute an Event of Nonappropriation.

"Fiscal Year" means the twelve-month period used from time to time by the City for its financial accounting purposes.

"Force Majeure" means, without limitation, the following: acts of God; strikes, lockouts or other industrial disturbances; acts of public enemies; orders or restraints of any kind of the government of the United States of America or of the State or any of their departments, agencies or officials, or any civil or military authority; insurrections; riots; landslides; earthquakes; storms; droughts; floods; explosions; breakage or accidents to machinery, transmission pipes or canals; or any other cause or event not reasonably within the control of the City and not due to its negligence.

"Independent Counsel" means an attorney duly admitted to the practice of law before the highest court of the State and who is not a full-time employee of the Authority, the City or the Trustee.

"Lease Term" means the duration of the leasehold estate created in the Projects as provided in the Master Lease, including the Original Term and the Renewal Terms, if any.

"Net Proceeds," when used with respect to (i) any performance or payment bond proceeds, (ii) proceeds from policies of insurance required hereby (including any self-insurance), (iii) any condemnation award, (iv) proceeds resulting from a default under a contract relating to the acquisition and construction of a Project (including liquidated damages, if any), or (v) the proceeds of any liquidation of all or portions of a Project, means the amount remaining after deducting all expenses (including, without limitation, attorneys' fees, Trustee's fees and costs) incurred in the collection of such proceeds or award from the gross proceeds thereof.

"Nonprofit Corporation Act" means the Utah Revised Nonprofit Corporation Act, Sections 16-6a-101, et seq., Utah Code Annotated 1953, as amended.

"Original Term" means the portion of the Lease Term which terminates on June 30, 2002.

"Permitted Encumbrances" means, as of any particular time, (i) liens for taxes and assessments not then delinquent, or which the City may, pursuant to the provisions of the Master Lease, permit to remain unpaid; (ii) the Master Lease including any security interests granted therein; (iii) utility access and other easements and rights of way, restrictions and exceptions which the City Representative and the Authority Representative certify in writing to

the Trustee will not interfere with the operation of the Projects or impair the marketability of title to the Projects or the general security provided for the Bondholders of the Bonds; (iv) the Indenture, the Security Documents and related financing statements; (v) the ownership interests of the City in any real or personal property which is the subject of any lease between the City and the Authority that is entered into in the furtherance of any Project; (vi) any mechanic's, laborer's, materialmen's, supplier's or vendor's lien or right in respect thereof if payment is not yet due under the contract in question; and (vii) such minor defects, irregularities, encumbrances and clouds on title as normally exist with respect to property of the general character of the Projects and as do not, in the opinion of Independent Counsel, materially impair the operation or marketability of title to the Projects.

"Purchase Option Price" means an amount payable, at the option of the City, at any time for the purpose of terminating the payment obligation of the City under the Master Lease with respect to a Project and purchasing the Authority's interest in such Project, which amount, when added to the amounts then on deposit in the Bond Fund and the subaccount within the Debt Service Reserve Fund with respect to such Project (other than moneys held by the Trustee for the payment of the Bonds under the Indenture not deemed Outstanding), shall be sufficient (i) to pay, defease, retire and/or redeem all the Outstanding Bonds of the Series of Bonds issued to finance or refinance the particular Project in accordance with the provisions of the Indenture (including, without limiting the generality of the foregoing, the principal of and interest to maturity or earliest applicable redemption date of the relevant Bonds and premium, if any, thereon, the expenses of defeasance and/or redemption, including escrow agent fees, if any, and fees and expenses of the City, the Authority and the Trustee), (ii) in case of redemption, to make arrangements satisfactory to the Trustee for the giving of the required notice of redemption and (iii) to make any payment of rebate with respect to the Bonds to be paid, defeased, retired and/or redeemed.

"Refunding Bond Act" means the Utah Refunding Bond Act, Title 11, Chapter 27, Utah Code Annotated 1953, as amended.

"Rentals" means all Base Rentals and Additional Rentals payable during the Original Term and each Renewal Term under the Master Lease.

"Renewal Terms" means the optional Renewal Terms of the Lease Term as provided in the Master Lease.

"2016 Project" means the Authority's 79% undivided interest in the Maverik Center, including its leasehold interest in the site of the Maverik Center Project pursuant to the Ground Lease and the Authority's interest in the Fire Station Projects.

"Series 2016 Bonds" means the Authority's Lease Revenue and Refunding Bonds, Series 2016, issued in the aggregate principal amount of $_____.

Representations, Covenants and Warranties of the Authority

(a) The Authority has acquired a leasehold interest in the Series 1996 Project (subject to Permitted Encumbrances) and has completed the acquisition, construction and equipping of the Series 1996 Project. The Authority will lease the Series 1996 Project to the City as provided in the Master Lease. It is understood by the parties to the Master Lease that the Authority shall have all rights, title and interest in the Series 1996 Project, subject to Permitted Encumbrances.

(b) The Authority will not pledge the Base Rentals, the Additional Rentals, Purchase Option Price or any of its other rights under this Master Lease and will not assign its interest in or encumber the Series 1996 Project except as provided in the Master Lease or under the Indenture and the Security Documents. All property and moneys received by the Authority from the City will, so long as no Event of Nonappropriation or Event of Default shall occur, be applied for the benefit of the City, and all property and moneys received by the Authority under this Master Lease with respect to the Series 1996 Project and under the Indenture for the Bondholders of the Bonds will be applied for the proportionate benefit of said Bondholders.

Lease Term

The Original Term shall commence as of the date of delivery of the Series 2016 Bonds and shall terminate at midnight on June 30, 20___. The Lease Term may be continued, solely at the option of the City, beyond the expiration of the Original Term, and for [_____]consecutive additional Renewal Terms thereafter each of one year in duration (except that the final Renewal Term shall commence July 1, 20___ and end on August 1, 20___) upon the City having adopted a final budget in accordance with applicable law prior to the end of the then-current Original Term or Renewal Term, as the case may be, that appropriates specifically with respect to the Master Lease sufficient City Funds for the payment of Base Rentals and reasonably estimated Additional Rentals to become due during the next following Renewal Term, it being understood that by budgeting and appropriating such amounts, the City shall have elected to continue the Lease Term for the next following Renewal Term and shall have given adequate notice thereof as contemplated by Section 17A-3-905(3)(a) of the Building Authority Act. The terms and conditions during any Renewal Term shall be the same as the terms and conditions during the Original Term, except that the Base Rentals and Purchase Option Price shall be as otherwise specified in Schedule I attached to the Master Lease for each such Renewal Term, as such Schedules may be revised as provided in the Master Lease.

In the event the governing body of the City is precluded, solely as a result of notice, hearing or other procedural requirements imposed by State law in connection with the adoption of a final budget (such as the requirements contained in Sections 59-2-918 through 59-2-923, Utah Code Annotated 1953, as amended), from adopting a final budget on or prior to the last day of any Fiscal Year, no Event of Nonappropriation shall be deemed to have occurred as a result of the failure to so adopt a final budget, provided that: (i) prior to the last day of such Fiscal Year, the governing body of the City shall have adopted a tentative budget which includes a tentative appropriation of City Funds sufficient to pay the Base Rentals and reasonably estimated Additional Rentals to become due during the succeeding Renewal Term; (ii) prior to the last day of such Fiscal Year, the City shall have delivered to the Trustee a copy of the tentative budget adopted by its governing body and a notice stating that it is the intention of the governing body to renew the Lease Term upon the adoption of the final budget; (iii) any Base Rentals or Additional Rentals described in the preceding paragraph, and provided further that any Rentals which become due and payable pursuant to the terms hereof prior to the adoption of such final budget shall be paid by the City in accordance with the tentative budget adopted by the governing body of the City; and (iv) the governing body of the City shall adopt a final budget on or before the last date allowable under applicable law that includes the appropriation of City Funds required under the Master Lease to renew the Lease Term. The City shall promptly file a copy of the final budget so adopted by its governing body with the Trustee.

Termination of Lease Term

The Lease Term shall terminate upon the first to occur of the following events:

(a) the expiration of the Original Term or Renewal Term thereof during which an Event of Nonappropriation shall occur;

(b) the exercise by the City of its option to purchase the Authority's interest in all of the Projects, granted under the provisions of the Master Lease;

(c) an Event of Default and the election of the Authority or the Trustee to terminate this Master Lease under the provisions thereof;

(d) the discharge of the lien of the Indenture under the provisions of the Master Lease;

(e) the termination of the Lease Term under the conditions provided therein; or

(f) the last day of the final Renewal Term of the Master Lease, upon payment of all Base Rentals and Additional Rentals required thereunder.

Payment of Rentals by the Authority to the City

Payments to Constitute a Current Expense of the City. The City and the Authority acknowledge and agree that the obligation of the City to pay Base Rentals and Additional Rentals under the Master Lease constitutes a current expense of the City payable exclusively from City Funds and shall not in any way be construed to be an obligation or indebtedness of the City within the meaning of Sections 3 or 4 of Article XIV of the Utah Constitution, or any other constitutional or statutory limitation or requirement applicable to the City concerning the creation of indebtedness. No provision in the Master Lease shall be construed or interpreted (i) to require the governing body of the City to appropriate any money to pay the Base Rentals, the Additional Rentals or the Purchase Option Price, or (ii) as a lending of the credit of the City within the meaning of Section 29 of Article VI of the Utah Constitution. Neither the City, nor the Authority on its behalf, has pledged the credit of the City to the payment of the Base Rentals, the Additional Rentals, the Purchase Option Price, the Bonds or the interest thereon, and neither the Master Lease, the Indenture nor the Bonds shall directly or contingently obligate the City to apply money, or to levy or pledge any form of taxation, to the payment of the Base Rentals, the Additional Rentals, the Purchase Option Price or the Bonds or any interest thereon except as expressly provided herein.

Payment of Base Rentals.

(a) The City shall pay Base Rentals exclusively from City Funds. The City shall pay Base Rentals during the Original Term and any Renewal Term in such amounts as shall be sufficient to pay principal and interest falling due on the Bonds during such Original Term or Renewal Term. The Base Rentals shall be payable directly to the Trustee in semiannual payments at the times and manner and in the amounts as specified in the schedule of Base Rental payments attached as Schedule I to the Master Lease as shall equal the interest payments falling due on the Bonds on the next succeeding Interest Payment Date and the principal payments falling due on the Bonds either by regularly scheduled maturities or by mandatory sinking fund redemption, on the next succeeding principal payment date, such that there shall be on deposit with the Trustee at least fifteen days prior to each principal and/or interest payment date on the Bonds an amount sufficient to make such payment. The City understands that the Base Rental Payment Schedule attached as Schedule I may be revised from time to time based on the redemption of Bonds (other than mandatory sinking fund redemptions) or the issuance of any Additional Bonds or Refunding Bonds allowed under the Indenture. The City hereby agrees to pay the Base Rentals in accordance with the Base Rental Payment Schedule attached to the Master Lease as it may be revised from time to time by such amounts as are necessary to reflect the redemption of the principal of certain Bonds or to pay the principal of the Additional Bonds or Refunding Bonds and interest on such Additional Bonds or Refunding Bonds.

In addition, in the event the market value of the amount on deposit in the Debt Service Reserve Fund is, for any reason, reduced below the Debt Service Reserve Requirement, the City shall, in the event it elects to renew this Master Lease during the following Renewal Term, and as a condition of renewal, pay to the appropriate Trustee in two substantially equal semiannual payments additional Base Rentals during the following Renewal Term, in an amount sufficient to replenish the Debt Service Reserve Fund to the Debt Service Reserve Requirement or provide a Reserve Instrument as provided in the Indenture.

(b) In the event that (1)(A) a portion of a Project (the "Completed Portion of the Project") financed with a separate Series of Bonds is accepted by the City for use and occupancy under this Master Lease, and (B) the acquisition and construction of additional portions of the Projects (the "Uncompleted Portion of the Project") financed with one or more Series of Bonds (other than the Series of Bonds described in (A) above) have yet to be completed, and (2) an Event of Default (as defined in the Indenture) occurs under the Indenture due to the failure to complete the Uncompleted Portion of the Project, the City and the Authority hereby agree, as follows:

(i) The City consents to the provisions of the Indenture governing such an Event of Default; and

(ii) The City shall, subject to the occurrence of an Event of Nonappropriation hereunder, continue to pay Base Rentals and Additional Rentals with respect to the Completed

Portion of the Project, and this Master Lease shall remain in full force and effect with respect to the Completed Portion of the Project.

(c) Notwithstanding anything contained in the Master Lease to the contrary, no payment of Base Rentals or Additional Rentals shall be required to be paid prior to the Completion Date of any one Project with respect to which such Rentals are being paid. However, in the event that less than all of any one Project is initially made available for use, occupancy and operation and the City accepts a portion of any one Project for its use, occupancy and operation pending final completion of the remainder of any one such Project, any Base Rentals paid by the City with respect to any one such Project shall be prorated in a manner so as to reflect the fair rental value of that portion of the Project then available for use, occupancy and operation by the City and so used, occupied and operated.

(d) The amount of the Base Rentals otherwise payable by the City under the Master Lease shall be reduced by an amount equal to (i) earnings on the investment of the Bond Fund, and (ii) moneys transferred to the Bond Fund from the Debt Service Reserve Fund pursuant to the Indenture. Each payment of Base Rentals shall be in consideration for the use of the Project by the City during the six-month period commencing on the _____ or _____, as applicable, next preceding the Bond Payment Date to which such Base Rental payment is attributable and for the option to purchase the Project granted in the Master Lease.

(e) The payments of Base Rentals and Additional Rentals under the Master Lease for each Renewal Term during the term thereof shall constitute the total Rentals which are payable for said Renewal Term and shall be paid by the City for and in consideration of the right of use, occupancy and operation of the Project and the continued quiet use and enjoyment of the Project for and during said Renewal Term. The parties hereto agree that such total Rentals will represent the fair rental value of the Project. In making such determination, the parties will give consideration to the costs of financing the Costs of Acquisition and Construction of the Project, the uses and purposes of the Project and the benefits therefrom which will accrue to the parties to this Master Lease and the general public by reason of the Project.

(f) Notwithstanding the foregoing, the City may not elect to renew the Master Lease in part and in the event it desires to renew the Master Lease must appropriate an amount sufficient to pay Base Rentals attributable to all of the Project which has been delivered for occupancy (or any portion thereof, in proportion to such available portion).

(g) It is understood and agreed by the City that, subject to the terms of the Master Lease and the Indenture, all Base Rentals payable under the Master Lease by the City, as well as the Purchase Option Price, if paid with respect to any or all of the Projects, are assigned by the Authority to the Trustee for the benefit of the Bondholders as set forth in the Indenture. The City assents to such assignment. The Authority hereby directs the City, and the City agrees to pay to the Trustee at its principal office, all Base Rentals payable by the City pursuant to the Master Lease and, if paid, the Purchase Option Price.

(h) The amount of the Base Rentals and Purchase Option Price otherwise payable shall be reduced as appropriate to reflect any redemption of Bonds and/or the purchase of Bonds and the cancellation thereof in advance of their maturity. If at any time the amounts held by the Trustee in the Bond Fund and the Debt Service Reserve Fund (other than moneys held for the payment of Bonds not deemed Outstanding) shall be sufficient to pay at the times required the principal of and interest and premium, if any, on all of the Bonds then Outstanding, the City shall not be obligated to pay any further Base Rentals under the Master Lease.

Payment of Additional Rentals with Respect to the Projects

In addition to the Base Rentals and as part of the total consideration for the use of the Projects and the option to purchase any or all of the Projects, and commencing upon the execution and delivery of the Master Lease and continuing throughout the period that the City pays Base Rentals, the City shall pay or shall cause to be paid the following Additional Rentals, exclusively from City Funds, during the Original Term and any Renewal Terms thereof as provided in the Master Lease:

(a) the annual fee of the Trustee for the ordinary services of the Trustee rendered and their ordinary expenses incurred under the Indenture;

(b) the reasonable fees and charges of the Trustee and any paying agent appointed under the Indenture with respect to the Bonds for acting as paying agent as provided in the Indenture;

(c) the reasonable fees and charges of the Trustee for extraordinary services rendered by it and extraordinary expenses incurred as Trustee under the Indenture;

(d) the reasonable out-of-pocket expenses of the Authority relating to the Projects not otherwise required to be paid by the City under the terms of the Master Lease;

(e) the costs of maintenance and repair of the Projects as required under the Master Lease;

(f) the costs of taxes, governmental charges, utility charges, management and operations expenses, liens and encumbrances with respect to the Projects as required under the Master Lease;

(g) the costs of casualty, public liability and property damage and worker's compensation insurance with respect to the Projects as required under the Master Lease;

(h) the amount of any tax or excise on the Base Rentals, Additional Rentals, Purchase Option Price or any other tax, however described, levied, assessed or imposed by the United States Government, the State or any political subdivision or any taxing authority thereof against the Authority;

(i) an amount equal to any franchise, succession, capital levy or transfer tax or any income, excess profits or revenue tax, or any other tax, assessment, charge or levy upon the Base Rentals, Additional Rentals or the Purchase Option Price payable by the City pursuant to the Master Lease;

(j) any amounts required to be deposited to the Rebate Fund established with respect to a Series of Bonds;

(k) during any Renewal Term following an Original Term or Renewal Term in which there was an insufficiency of Net Proceeds as described in the Master Lease, an amount equal to the insufficiency of Net Proceeds required to repair, replace, restore or modify the affected Project; and

(l) any amount required to be deposited in the Repair and Replacement Fund.

The Additional Rentals specified in subsections (a), (b), (c), (j), (i) and (l) shall be payable to the Trustee and shall be due and payable within ten days after notice in writing from said Trustee to the City stating the amount of Additional Rentals then due and payable and the purpose thereof. Except as otherwise provided herein or in the Indenture, the Additional Rentals specified in subsections (d), (e), (f), (g), (h), and (i), shall be payable to the Authority or directly to the person or entity with respect to which such costs or fees were incurred and shall be due and payable at such time as the Authority or such person or entity shall require.

Manner of Payment

The Base Rentals, Additional Rentals and, if paid, the Purchase Option Price, shall be paid exclusively from City Funds and in lawful money of the United States of America. The obligation of the City to make payment of the Base Rentals and Additional Rentals required under the Master Lease and to perform and observe the other covenants and agreements contained therein shall be absolute and unconditional in all events except as expressly provided thereunder.

Nonappropriation

In the event sufficient City Funds are not budgeted and appropriated by the City, in a final budget adopted within the time permitted by the Master Lease, for the payment of the (i) Base Rentals becoming due during such

Renewal Term, and (ii) such Additional Rentals becoming due during such Renewal Term which can be determined with reasonable accuracy, then an Event of Nonappropriation shall be deemed to have occurred as of the first day of such Renewal Term and the City shall not be obligated to make payment of the Base Rentals or Additional Rentals provided for in the Master Lease beyond the last day of the Renewal Term preceding such Event of Nonappropriation. Subject to the provisions of the next succeeding sentence, once the City has elected to continue the Master Lease for a Renewal Term by budgeting and appropriating sufficient City Funds for the payment of Base Rentals and Additional Rentals thereunder the City shall, as of the first day of such Renewal Term, be obligated to pay such Base Rentals and Additional Rentals during such Renewal Term. If the City fails to pay any Base Rentals or Additional Rentals due under the Master Lease, or upon an Event of Nonappropriation the City shall immediately quit and vacate the Projects and its obligation to pay Base Rentals or Additional Rentals thereunder shall terminate. The Trustee shall, upon the occurrence of an Event of Nonappropriation, have all rights and remedies to take possession of the Projects as trustee for the benefit of the Bondholders of the Bonds and the Trustee shall be further entitled to all moneys then on hand and being held in all funds created under the Indenture, less any moneys then due and owing to the Trustee for services performed as trustee thereunder. All property, funds and rights acquired by the Trustee by reason of an Event of Nonappropriation shall be held by the Trustee under the Indenture for the benefit of the Bondholders as set forth in said Indenture until the principal of, premium, if any, and interest on the Bonds are paid in full and other amounts payable under the Indenture are paid in full and other amounts payable under the Indenture are paid and any excess shall thereafter be paid to the City.

Request for Appropriation

During the Lease Term, the City covenants and agrees as follows:

(a) to include in its annual tentative budget prepared by the appropriate officials acting on behalf of the City in accordance with applicable law an item for expenditure of an amount necessary (after taking into account any and all City Funds then legally available for such purpose), to pay the Base Rentals and reasonably estimated Additional Rentals (calculated pursuant to the Master Lease) for the Projects during the next succeeding Renewal Term, and (ii) to take such further action (or cause the same to be taken) as may be necessary or desirable to assure that the final budget submitted to the governing body of the City for its consideration seeks an appropriation of City Funds sufficient to pay such Base Rentals and Additional Rentals for each such Renewal Term, including all such actions for such purpose as may be required under the Uniform Fiscal Procedures Act for Utah Cities, Title 10, Chapter 6, Utah Code Annotated 1953, as amended (the "Uniform Fiscal Procedures Act"). The City has made the necessary appropriations for the Fiscal Year commencing July 1, 2016. The next such inclusion in the City's annual tentative budget shall be made under applicable law prior to the Fiscal Year commencing July 1, 2002, so that the Base Rentals and the reasonably estimated Additional Rentals payable during such Renewal Term will have been appropriated for such purpose, and subsequent inclusions in each respective tentative budget for appropriations by the City shall be made in each fiscal year thereafter so that the Base Rentals and Additional Rentals to be paid during the succeeding Renewal Term will be available for such purposes as long as the governing body of the City determines to approve such amount in the final budget as adopted.

(b) To effect the covenants set forth in (a) above, the City hereby directs its "budget officer" (as such term is defined in the Uniform Fiscal Procedures Act), or any other officer at the time charged with the responsibility of formulating budget proposals, to include in the tentative budget prepared annually by such budget officer or other officer and submitted to the governing body of the City, in any Fiscal Year in which the Master Lease is in effect, items for all payments required for the ensuing Renewal Term under this Master Lease. It is the intention of the City that the decision to renew or not to renew the term of the Master Lease is to be made solely by the governing body of the City at the time it considers for adoption of the final budget for each of its Fiscal Years and corresponding Renewal Terms thereunder, and not by any official of the City, acting in his or her individual capacity as such. In this connection, the City covenants and agrees that such budget officer or other officer shall not amend, modify or otherwise change the appropriations made in any finally adopted budget for the payment of any Base Rentals or Additional Rentals without the express prior approval of the governing body of the City.

Acquisition and Construction of Projects

Agreement to Acquire and Construct the Projects. The City and the Authority agree that the Authority shall cause the Projects to be acquired and constructed as provided in the Master Lease, all of which construction, shall be made in accordance with the plans and specifications for such Projects as approved by the City. The City agrees that in order to effectuate the purposes of the Master Lease, it authorizes on behalf of the Authority, to make, execute, acknowledge and transmit any other contracts, orders, receipts, writings and instructions with any other persons, firms or corporations and in general do all things which may be requisite or proper, all for the carrying out and furtherance of the acquisition and construction of the Projects.

The Authority agrees to carry out or to cause to be carried out the acquisition, construction and equipping of any Project through the application of moneys to be disbursed from the Construction Fund by the Trustee utilizing a requisition request complying with the requirements of the Master Lease.

The Authority agrees to cause all Projects to be constructed with all reasonable dispatch, subject only to delays caused by Force Majeure excepted.

The City hereby covenants, to the extent permitted by applicable law, to use other legally available funds and to seek additional legally available funds to the extent necessary to complete the acquisition, construction and equipping of any Project as herein required, or to make certain design changes in such Projects to the extent necessary to complete the acquisition, construction and equipping of such Project with moneys then available for such purposes in the Construction Fund.

Establishment of Completion Date; Disbursement of Balance of Construction Fund. The Completion Date with respect to any one Project shall be evidenced to the Trustee by a certificate signed by the City Representative and the Authority Representative stating that, except for amounts retained by the Trustee at the direction of the Authority for any Costs of Acquisition and Construction not then due and payable, (i) the acquisition, construction, installation and improvement of such Project has been completed in accordance with the plans and specifications and all labor, services, materials and supplies used in such acquisition, construction, installation and improvement have been paid for, (ii) all other facilities necessary in connection with such Project have been constructed, acquired and installed to their satisfaction, (iii) such Project is suitable and sufficient for its intended purposes, and (iv) all costs and expenses incurred in the acquisition, construction and equipping of such Project have been paid. Notwithstanding the foregoing, such certificate shall state that it is given without prejudice to any rights against third parties which exist at the date of such certificate or which may subsequently come into being. Upon receipt of such certificate, the Trustee shall retain in the applicable account within the Construction Fund an aggregate sum equal to the amount estimated by the City Representative and the Authority Representative to be necessary for payment of the Cost of Acquisition and Construction not then due and payable. All moneys then on hand in such account within the Construction Fund in excess of the amount to be retained shall be transferred by the Trustee to the Bond Fund to be used by the Trustee as provided in the related Supplemental Indenture.

Maintenance; Taxes; Insurance and Other Charges

Maintenance of the Projects by the City. The City shall, at its own expense from available City Funds, operate, manage, keep and maintain the Projects (or cause the Projects to be operated, managed, kept and maintained) in good working order, condition and repair, including replacements of a capital nature when necessary, and including periodic painting as reasonably determined by the Authority and in accordance with all operating and maintenance manuals and all applicable laws, rules, ordinances, orders and regulations as shall be in effect from time to time of: (1) any federal, state, county, municipal, or other governmental or quasi-governmental agencies and bodies having or claiming jurisdiction thereof and all their respective departments, bureaus, and officials; (2) the insurance underwriting board or insurance inspection bureau having or claiming jurisdiction thereof; and (3) all insurance companies insuring all or any part of the Projects. The foregoing shall not be construed to prohibit the City from challenging the validity or applicability of such laws, rules, ordinances, orders and regulations and to defer compliance until the challenge has been completed.

Modification of the Projects. The City shall have the privilege of remodeling any Project or making substitutions, additions, modifications and improvements thereto, at its own cost and expense, and the same shall be

subject to the Master Lease, the Indenture and the Security Documents, and shall also be included under the terms thereof; provided, however, that such remodeling, substitutions, additions, modifications and improvements shall not in any way damage such Project or cause it to be used for purposes other than those authorized under the provisions thereof, and the Constitution and laws of the State; and provided, however, that such Project, as remodeled, improved or altered upon completion of such remodeling, substitutions, additions, modifications and improvements made pursuant to the Master Lease shall be of a fair rental value not less than the fair rental value of such Project immediately prior to the remodeling or the making of substitutions, additions, modifications and improvements.

Taxes, Other Governmental Charges and Utility Charges. In the event that a Project or any portion thereof shall, for any reason, be deemed subject to taxation, assessments or charges lawfully made by any governmental body which may be secured by a lien against such Project, an Additional Rental, from and to the extent of City Funds, shall be paid, or cause to be paid, by the City equal to the amount of all such taxes, assessments and governmental charges then due. With respect to special assessments or other governmental charges which may be lawfully paid in installments over a period of years, the City shall be obligated to provide for Additional Rentals only for such installments as are required to be paid during that period that the City is obligated to pay Base Rentals. The City shall not allow any liens for taxes, assessments or governmental charges to exist (including, without limitation, any taxes levied which, if not paid, will become a charge on the rentals and receipts prior to or on a parity with the charge thereon and the pledge and assignment thereof to be created and made in the Indenture), or any interest therein (including the interest of the Authority) on the rentals and revenues derived therefrom or hereunder. The City shall also pay, or shall cause to be paid, as Additional Rentals, from and to the extent of available City Funds, as the same respectively become due, all gas, water, steam, electricity, heat, power, telephone, utility and other charges incurred in the operation, maintenance, use, occupancy and upkeep of the Projects.

As long as the City is in possession of the Projects and except as otherwise provided in the Master Lease, it shall keep it free and clear of all liens, charges and encumbrances (except Permitted Encumbrances and any encumbrances arising through the Authority).

The City may, at the expense and in the name of the City, in good faith contest any such taxes, assessments, utility and other charges and, in the event of any such contest, may permit the taxes, assessments or other charges so contested to remain unpaid during the period of such contest and any appeal therefrom provided the City shall first deposit with the Trustee, or in court, a bond or other security satisfactory to the Trustee pursuant to the Security Documents unless the Trustee shall notify the City that, in the opinion of Independent Counsel, by nonpayment of any such items the security afforded pursuant to the terms of the Master Lease, the Indenture and the Security Documents will be materially endangered or the Projects or any portion thereof will be subject to loss or forfeiture, in which event such taxes, assessments or charges shall be paid forthwith.

Provisions Respecting Insurance. The City agrees to insure or cause to be insured the Projects against loss or damage of the kinds usually insured against by public bodies similarly situated, including, without limitation, policies of casualty and property damage, by means of policies issued by reputable insurance companies duly qualified to do such business in the State with a uniform standard coverage endorsement limited only as may be provided in the standard form of extended coverage endorsement at that time in use in the State, in amounts that are not less than full insurable value of the Projects. The term "full insurable value" as used in the Master Lease shall mean the actual replacement value, or at the option of the City any lesser amount which is equal to or greater than the principal amount of all Bonds then Outstanding of the Series which financed said Project (or applicable portions thereof in case said Series of Bonds financed more than one Project). Alternatively, the City may insure or cause to be insured under a blanket insurance policy or policies which cover not only the Projects but other properties in the amounts required by the previous sentence. Any insurance policy issued pursuant to the preceding paragraph shall be so written or endorsed as to make losses, if any, payable to the Trustee. The Net Proceeds of the insurance required in the Master Lease shall be applied as described under "Obligation of the City to Repair and Replace the Project" below or, at the option of the City, as described in "Discharge of the Obligation of the City to Repair and Replace the Project" below.

The City agrees to carry or cause to be carried public liability insurance with one or more reputable insurance companies in amounts that are typically carried by governmental entities of the same size as the City. In the event that the limits on governmental liability established by Section 63-30-34, Utah Code Annotated 1953, as amended, are increased, the amounts required by the Master Lease shall be deemed to be increased to such higher

amounts. If self-insurance is not utilized, the Authority and the Trustee shall be made additional insureds under such policies.

Damage, Destruction and Condemnation; Use of Net Proceeds

Damage, Destruction and Condemnation. If, prior to the termination of the Lease Term and the payment in full of the Bonds (or the making of provisions for the payment thereof in accordance with the Indenture) (i) the Projects or any material portion thereof shall be destroyed (in whole or in part), or damaged by fire or other casualty; or (ii) title to, or the temporary or permanent use of the Projects or any material portion thereof or the Projects or any material portion thereof shall be taken under the exercise of the power of eminent domain by any governmental body or by any person, firm or corporation acting under governmental authority; or (iii) a material defect in construction of a Project shall become apparent; or (iv) title to or the use of all or any material portion of the Projects shall be lost by reason of a defect in title thereto, the City shall be obligated, subject to the provisions of "Discharge of the Obligation of the City to Repair and Replace the Project" below, to continue to pay the amounts specified in the Master Lease regardless of whether said Project or Projects shall have been accepted.

Obligation of the City to Repair and Replace the Project. Subject to the provisions of the Master Lease, the City, the Authority, and the Trustee shall cause the Net Proceeds of any insurance policies, performance bonds or condemnation awards with respect to a Project or Projects to be deposited in the Construction Fund if received before the Completion Date and in a separate trust fund under the Indenture if received thereafter. All Net Proceeds so deposited shall be applied to the prompt repair, restoration, modification or improvement of said Project or Projects by the City upon receipt of a requisition acceptable to the Trustee signed by the City Representative, stating with respect to each payment to be made: (i) the requisition number; (ii) the name and address of the person, firm or corporation to whom payment is due; (iii) the amount to be paid; (iv) that each obligation mentioned therein has been properly incurred, is a proper charge against the Construction Fund or separate trust fund, and has not been the basis of any previous withdrawal and specifying in reasonable detail the nature of the obligation, accompanied by a bill or a statement of account for such obligation; and (v) such other documents and information as the Trustee requires. The balance of any such Net Proceeds remaining after such repair, restoration, modification or improvement has been completed shall be transferred to the Bond Fund to be applied to the payment of the principal of, premium, if any, and interest on the applicable Series of Bonds, or if said Series of Bonds shall have been fully paid (or provision for payment thereof has been made in accordance with the provisions of the Indenture), any balance remaining in such Construction Fund or separate trust fund shall be paid to the City. If the Net Proceeds shall be insufficient to pay in full the cost of any repair, restoration, modification or improvement, the City shall, from and to the extent of available City Funds, complete the work and pay any cost in excess of the amount of the Net Proceeds. The City agrees that, if by reason of any such insufficiency of the Net Proceeds, the City shall make any payments pursuant to the provisions of the Master Lease, the City shall not be entitled to any reimbursement therefor from the Authority, the Trustee or the Bondholders of the Bonds nor shall the City be entitled to any diminution of the Base Rentals and Additional Rentals payable under the Master Lease. The City further agrees that any repair, restoration, modification or improvement paid for in whole or in part from such Net Proceeds shall be subject to the security afforded by the Indenture, the Master Lease and the Security Documents, and shall be included under the terms of the Master Lease.

Covenant to Seek Appropriation of Insufficiency of Net Proceeds; Discharge of the Obligation of the City to Repair and Replace the Projects. In the event that the Net Proceeds of any insurance policy, performance bond or condemnation award shall be insufficient to pay in full the cost of any repair, restoration, or modification of a Project or Projects required under the Master Lease, the appropriate budget officers of the City shall, within 30 days of notice of such insufficiency, seek an appropriation from the City Council of the City for an amount equal to any such insufficiency. In the event that the City shall fail to appropriate, by the first day of the next Renewal Term following such request for an appropriation, an amount at least equal to such insufficiency for such purpose, the obligation to repair and replace said Project or Projects under the Master Lease may be discharged by depositing the Net Proceeds of the insurance policies, performance bonds or condemnation awards made available by reason of such occurrence into the Bond Fund. Upon the deposit of such Net Proceeds in said Bond Fund, the City shall have no further obligation for the payment of Base Rentals and Additional Rentals thereunder with respect to said Project or Projects, and possession of said Project or Projects as well as all rights created pursuant to the Master Lease and the interest of the City and the Authority therein and in any funds or accounts created under the Indenture with respect to said Project or Projects (except for moneys held in the Rebate Fund and held for the payment of Bonds not

then deemed Outstanding), shall be surrendered to the Trustee, as trustee for the Bondholders of the applicable Series of Bonds. Thereafter, the Authority's interest in said Project or Projects may be liquidated pursuant to the provisions of and subject to the limitations set forth in the Indenture, Security Documents and the proceeds of such liquidation and the Net Proceeds of any insurance policy, performance bond or condemnation award so deposited in the Bond Fund, as well as all other moneys on deposit in any fund created under the Indenture with respect to said Project or Projects (except moneys held in the Rebate Fund or for the payment of Bonds not then deemed Outstanding), shall be applied to the redemption of the applicable Series of Bonds on the next succeeding redemption date. Such redemption of the applicable Series of Bonds shall be made upon full or partial payment of the principal amount of said Bonds then Outstanding and accrued interest thereon all in accordance with the Indenture.

Granting of Easements and Releases. As long as no Event of Nonappropriation or an Event of Default with respect to the Projects shall have happened and be continuing, the City may at any time or times grant easements, licenses, rights of way and other rights or privileges in the nature of easements with respect to any property or rights included in the Master Lease and the Indenture, free from the security interest afforded by or under the Master Lease, the Indenture and the Security Document or the City may release portions of the sites on which a Project or Projects is located or existing easements, licenses, rights of way and other rights and privileges with or without consideration, and the Authority agrees that it shall execute and deliver and will cause and direct the Trustee to execute and deliver, any instrument necessary or appropriate to confirm and grant or release such portion of the Project site or any such easement, license, right of way or other grant or privilege upon receipt of: (i) a copy of the instrument of grant or release; (ii) a written application signed by the City Representative requesting such instrument and stating that such grant or release will not impair the effective use or interfere with the operation of such Project or Projects or any material portion thereof; and (iii) an opinion of counsel to the City that such grant or release will not materially weaken, diminish or impair the security granted to the Bondholders and contemplated hereby or under the Master Lease, the Indenture or the Security Documents.

Conveyance of the Projects

(a) The Authority's right and interest in and to all of the Projects shall be transferred, conveyed and assigned by the Authority to the City:

(i) Upon payment by the City of the then applicable Purchase Option Price and upon giving not less than thirty (30) days prior written notice to the Authority and the Trustee; or

(ii) Upon payment by the City of all Base Rentals and Additional Rentals required to be paid under the Master Lease during the Original Term and each of the Renewal Terms; or

(iii) Upon the discharge of the lien of the Indenture.

Under the Indenture, the Trustee shall agree to execute such documents and instruments as shall be necessary to effect a release of the security interest granted by said Indenture or the Security Documents upon the payment in full of all of the Bonds.

(b) The City understands that the Purchase Option Price may be revised from time to time based on certain redemptions of Bonds (other than mandatory sinking fund redemptions or the issuance of any Additional Bonds or Refunding Bonds authorized under the Indenture. In the event the City so elects to purchase all of the Projects as provided in the Master Lease, the City agrees to pay such applicable Purchase Option Price (together with the other amounts constituting the purchase price for the Projects as provided herein) as it may be revised from time to time by such amounts as are necessary to reflect the redemption of the Bonds or the issuance of Additional Bonds or Refunding Bonds. Nothing in the Master Lease shall be construed to create any obligation of the City to purchase the Projects.

Release of a Project Upon Payment of Related Series of Bonds. In addition to the purchase option set forth above, the City is hereby granted the option of purchasing a Project in advance of the final maturity of the related Series of Bonds. So long as no Event of Default shall have occurred and be continuing under the Indenture and so long as no Event of Default or Event of Nonappropriation shall have occurred and be continuing under the Master

Lease, a Project may be released from the lien created with respect to the Bonds and the Indenture and the Master Lease and transferred to the City (subject to Permitted Encumbrances and liens and encumbrances resulting from the failure of the City to perform or observe the agreements on its part contained in the Master Lease or otherwise consented to by the City), if (i) the City shall deposit with the Trustee the Purchase Option Price for such Project; and (ii) there shall have been delivered to the Trustee an opinion of nationally recognized bond counsel to the effect that the release of such Project will not adversely affect the excludability of interest on the Bonds from federal gross income of the owners thereof, if applicable. The City shall be obligated to pay all costs of the Trustee and the Authority in providing for the transfer and release of any Project or portion thereof.

Conveyance on Purchase of Projects. At the closing of any purchase of any or all of the Projects pursuant to the option to purchase granted in the Master Lease, the Authority shall, upon receipt by the Trustee of the applicable Purchase Option Price, or upon the payment by the City of all Base Rentals and Additional Rentals required, or upon discharge of the lien of the Indenture as the case may be, deliver to the City the following:

(a) If necessary, a release by the Trustee of the lien under the Indenture and Security Documents, together with any other instrument necessary or appropriate to release any security interest granted by the Master Lease with respect to the Project or Projects to be released, the Indenture and the Security Documents.

(b) All necessary documents conveying to the City good and marketable title to the Project or Projects to be released as it then exists subject to the following: (i) the right, title and interest of the City in such Project or Projects; (ii) those liens and encumbrances created by the City or to the creation or suffering of which the City consented; (iii) those liens and encumbrances resulting from the failure of the City to perform or observe any of the agreements on its part contained in the Master Lease; and (iv) Permitted Encumbrances, other than the Indenture, the Master Lease, the Security Documents and any financing statements filed by the Authority pursuant to the Master Lease with respect to the Project or Projects to be released or the Indenture.

Relative Position of Option and Indenture. The purchase option granted to the City with respect to all of the Projects shall be and remain prior and superior to the Indenture and may be exercised whether or not an Event of Nonappropriation or an Event of Default shall have occurred and be continuing under the Master Lease or under the Indenture; provided, however, that such option must be exercised before the later of (i) ninety days after notification in writing by the Trustee to the City of the occurrence of an Event of Default under the Indenture, or (ii) the ultimate disposition of the Project or Projects upon exercise of any available foreclosure remedy, and further provided that, as a condition of the exercise of such option, the City must pay, in addition to the Purchase Option Price, any interest payment deficiencies accruing from the date of the Event of Default or Event of Nonappropriation.

Events of Default and Remedies

Events of Default Defined. Any one of the following shall be an "Event of Default" under the Master Lease:

(a) Failure by the City to pay any Base Rentals or Additional Rentals required to be paid under the Master Lease at the time specified therein, in the absence of an Event of Nonappropriation, for a period of five days after written notice, specifying such failure and requesting that it be remedied, given to the City by the Trustee or, in any event, a failure by the City to make such payments within fifteen days after the date on which they are due; or

(b) Failure by the City to observe and perform any covenant, condition or agreement on its part to be observed or performed, other than as referred to in (a), for a period of thirty days after written notice, specifying such failure and requesting that it be remedied, given to the City by the Trustee, unless the Trustee shall agree in writing to an extension of such time prior to its expiration; provided, however, that if the failure stated in the notice cannot be corrected within the applicable period, the Trustee shall not unreasonably withhold their consent to an extension of such time if corrective action shall be instituted by the City within the applicable period and diligently pursued until the default is corrected; or

(c) The City shall abandon any material portion of a Project; or

(d) The City 's interest in the Master Lease or any part thereof shall be assigned or transferred without the written consent of the Authority, either voluntarily or by operation of law, except as permitted hereunder; or

(e) The City shall file any petition or institute any proceedings wherein or whereby the City seeks to be adjudicated a bankrupt, or to be discharged from any and all of its debts or obligations, or offers to the City's creditors to effect a composition or extension of time to pay the City's debts, or seeks a reorganization or a readjustment of the City's debts, or for any other similar release, or any such petition or any such proceedings of the same or similar kind or character shall be filed, or instituted or taken against the City and the same shall not have been dismissed or otherwise resolved in favor of the City within sixty days from the filing or institution thereof.

The foregoing provisions are subject to the following limitations: (i) the obligations of the City to make payments of the Base Rentals and Additional Rentals shall be subject to the occurrence of an Event of Nonappropriation; and (ii) if, by reason of Force Majeure, the City shall be unable, in whole or in part, to carry out any agreement on its part herein contained, other than the obligations on the part of the City contained in the Master Lease, the City shall not be deemed in default during the continuance of such inability. The City agrees, however, to remedy with all reasonable dispatch the cause or causes preventing the City from carrying out its agreement; provided, however, that the settlement of strikes, lockouts and other industrial disturbances shall be entirely within the discretion of the City, and the City shall not be required to make settlement of strikes, lockouts and other industrial disturbances by acceding to the demands of the opposing party or parties when such course is, in the judgment of the City, unfavorable to the City.

Remedies on Default. Whenever any Event of Default referred to in the previous section shall have happened and be continuing, subject to the limitations contained in the Indenture, the Trustee or the Authority with the written consent of the Trustee, shall have the right, at their or its option without any further demand or notice, to take one or any combination of the following remedial steps:

(a) Immediately reenter and take possession of the Projects;

(b) Exercise any rights or remedies as the Trustee may have under the Security Documents; or

(c) Take whatever action at law or in equity may appear necessary or desirable to enforce their or its rights in and to the Projects, including, without limitation, the right to terminate the Lease Term.

The obligation of the City to vacate the Projects upon the occurrence of an event of Nonappropriation shall also apply to an Event of Default. Any moneys collected pursuant to action taken under the Master Lease shall be paid into the Bond Fund and applied in accordance with the provisions of the Indenture.

Limitations on Remedies. No judgment requiring a payment of money may be entered against the City by reason of an Event of Default or an Event of Nonappropriation under this Master Lease, except as expressly provided in the Master Lease. In the event the security interest created under the Indenture, the Master Lease or the Security Documents shall be foreclosed subsequent to the occurrence of an Event of Default or an Event of Nonappropriation, no deficiency judgment may be entered against the City or the Authority.

No Remedy Exclusive. No remedy herein conferred upon or reserved to the Authority and the Trustee is intended to be exclusive, and every such remedy shall be cumulative and shall be in addition to every other remedy given under the Master Lease or now or hereafter existing at law or in equity. No delay or omission to exercise any right or power accruing upon an Event of Default shall impair any such right or power or shall be construed to be a waiver thereof, but any such right and power may be exercised from time to time and as often as may be deemed expedient.

THE SECURITY DOCUMENTS

The Authority under the Security Documents will irrevocably warrant, grant, transfer, convey and assign to Trustee, IN TRUST, WITH POWER OF SALE, all of the Authority's right, title and interest in the Maverik Center Project, including, but not limited to the Authority's interests in real property, rents, issues, profits, royalties, income, interest in leases or subleases, options to purchase, easements, rights of way, proceeds of insurance or condemnation and tangible personal property in order to provide additional security for the Authority's payment obligations under the Bonds and the Indenture. The Security Documents generally provide for the procedure by which the Trustee can foreclose on and sell the Authority's interest in the Maverik Center Project to pay the Authority's payment obligations under the Bonds and Indenture.

APPENDIX C

ECONOMIC AND DEMOGRAPHIC INFORMATION REGARDING THE CITY AND SALT LAKE COUNTY

THE CITY

Demographic Statistics

Certain demographic information relating to the City is set forth in the following table:

Fiscal Year	Population[1]	Unemployment Rate[2]
2012	131,877	5.2%
2011	129,480	6.9
2010	126,117	6.3
2009	125,218	6.0
2008	124,963	2.7
2007	124,089	3.3
2006	120,757	6.6

(1) Data are projections by the West Valley City Community Development Department
(2) Utah Department of Workforce Services.
(Source: The City.)

Construction Activity

The following table summarizes the value of permit authorized construction for the City for the years shown for both residential and commercial construction.

Calendar Year	New Dwelling Units	Est. New Residential Value (in $000)	Est. New Nonresidential Value (in $000)	Est. Total Construction Value (in $000) [1] [2]

(Source:)

SALT LAKE COUNTY

The following demographic information is provided solely as background information regarding Salt Lake County (the "County"). The County is the economic and population center of the State. Based on 2010 Census data, the County has approximately 37% of the total population of the State. The State capital, Salt Lake City, is located in the County.

Rate of Unemployment – Annual Average (Seasonally Adjusted)

Year	County	State	United States
2015	3.3%	3.5%	5.3%
2014	3.7	3.8	6.2
2013	4.5	4.7	7.4
2012	5.3	5.4	8.1
2011	6.6	6.8	8.9
2010	7.7	7.8	9.6

(Source: Utah Department of Workforce Services and the U.S. Department of Labor.)

Economic Indicators in the County

LABOR FORCE (1)	2014	2013	2012	2011	2010
Labor Force (annual average)	577,571	571,229	557,101	546,644	548,378
Employed (annual average)	556,398	545,729	527,698	510,425	506,309
Unemployed (annual average)	21,173	25,500	29,403	36,219	42,069
Average Employment (Non-Farm Jobs)	639,466	624,309	603,919	583,010	571,259
% Change Prior Year	*2.43*	*3.38*	*3.59*	*2.06*	*-1.70%*
Average Employment by Sector:					
Agriculture, Forestry, Fishing & Hunting	179	194	213	217	234
Mining	2,948	3,399	3,652	3,220	2,628
Utilities	2,617	2,593	2,716	2,711	2,756
Construction	31,844	30,814	30,727	29,702	29,938
Manufacturing	52,453	52,616	52,554	51,227	50,286
Wholesale Trade	30,546	30,758	31,158	29,969	28,421
Retail Trade	67,573	66,700	64,437	61,153	61,824
Transportation and Warehousing	34,652	33,991	33,179	32,376	31,567
Information	18,474	18,265	17,761	16,567	16,637
Finance and Insurance	41,492	40,114	38,151	37,704	37,072
Real Estate and Rental and Leasing	9,611	9,294	9,166	9,010	8,805
Professional, Scientific & Technical Services	46,800	44,135	40,811	38,201	37,021
Management of Companies and Enterprises	16,558	16,319	16,101	15,664	15,335
Administrative, Support, Waste Mgmt, & Rmdtn	48,471	46,631	43,587	41,823	39,070
Education Services	59,409	56,651	53,899	52,081	49,722
Health Care and Social Assistance	71,321	70,073	67,351	65,889	64,966
Arts, Entertainment, and Recreation	8,524	8,085	7,848	7,468	7,622
Accommodation and Food Services	46,214	44,774	42,524	40,787	39,970
Other Services and Unclassified Establishments	20,331	19,568	18,754	18,130	29,663
Public Administration	29,630	29,532	29,540	29,330	29,614
Total Establishments	40,040	38,702	36,826	35,890	35,625
Total Wages ($Millions)	30,469.01	28,858.15	27,727.61	25,917.21	24,828.71

INCOME AND WAGES	2014	2013	2012	2011	2010
Total Personal Income ($000) (2)	n/a	$45,552,565	$44,029,166	$41,382,606	$38,909,661
Per Capita Income (2)	n/a	42,189	41,378	39,486	37,668
Median Household Income (2)	n/a	60,555	59,626	59,168	58,004
Average Monthly Nonfarm Wage (1)	$3,971	$3,852	$3,826	$3,705	$3,622

SALES & CONSTRUCTION	2014	2013	2012	2011	2010
Gross Taxable Sales (3)	$22,941.0M	$21,986.1M	$21,387.8M	$19,879.6M	$18,798.7M
New Dwelling Units (4)	6,066	5,228	2,934	2,406	2,193
Total Construction Value ($000) (4)	1,966,763.8	1,583,876.4	1,589,472.9	1,561,759.6	1,042,645.9
New Residential Value ($000) (4)	1,052,539.4	906,737.9	634,610.4	478,994.2	396,367.2
New Nonresidential Value ($000) (4)	467,928.3	407,459.1	608,593.5	624,547.0	308,135.7

(Sources: (1) Utah Department of Workforce Services; (2) U.S. Department of Commerce, Bureau of Economic Analysis, last updated November 20, 2014; (3) Utah State Tax Commission; (4) University of Utah Bureau of Economic and Business Research.)

(The remainder of this page intentionally left blank.)

Major Employers in the County

The following is a list of some of the largest employers in the County.

Company	Industry	Employment Range
University of Utah	Higher Education	15,000-19,999
Intermountain Health Care	Health Care	15,000-19,999
State of Utah	State Government	10,000-14,999
Granite School District	Public Education	7,000-9,999
Jordan School District	Public Education	5,000-6,999
University of Utah Hospital	Health Care	5,000-6,999
Salt Lake County	Local Government	5,000-6,999
Wal-Mart	Warehouse Clubs and Supercenters	4,000-4,999
US Govt. excl. post office & VA hospital	Federal Government	4,000-4,999
The Canyons School District	Public Education	4,000-4,999
Salt Lake City School District	Public Education	3,000-3,999
L3 Communications	Communications Equipment Manufacturing	3,000-3,999
Delta Airlines	Air Transportation	3,000-3,999
Salt Lake City	Local Government	3,000-3,999
Zions Bank	Banking	3,000-3,999
Smith's Marketplace	Grocery Stores	3,000-3,999
Salt Lake Community College	Higher Education	3,000-3,999
Discover	Consumer Lending	2,000-2,999
Wells Fargo Bank	Banking	2,000-2,999
VA Medical Center	Health Care and Federal Government	2,000-2,999
U. S. Postal Service	Federal Government	2,000-2,999
ARUP Laboratories	Medical Laboratory	2,000-2,999
United Parcel Service	Courier and Express Delivery Services	2,000-2,999
National Benefit Services	Office Administrative Services	2,000-2,999
Kennecott Utah Copper	Metal Manufacturing and Mining	2,000-2,999
Convergys	Telephone Call Centers	2,000-2,999
JetBlue	Air Transportation	2,000-2,999
Skywest Airlines	Air Transportation	2,000-2,999
Harmons	Grocery Stores	1,000-1,999
Utah Transit Authority	Public Transportation	1,000-1,999
eBay	Online Auctions Retail	1,000-1,999
Central Refrigerated Service	Trucking	1,000-1,999
Xerox Commercial Solutions	Data Processing and Hosting Services	1,000-1,999
CR England	Trucking	1,000-1,999
Price's Guaranteed Doors	Building Material and Supplies Dealers	1,000-1,999
Fidelity Brokerage Services	Financial Services	1,000-1,999
Home Depot	Home Improvement Centers	1,000-1,999
St. Marks Hospital	Health Care	1,000-1,999
Goldman Sachs	Financial Services	1,000-1,999
Merit Medical Systems	Surgical and Medical Instrument Manuf.	1,000-1,999
Grand America / Little America Hotels	Accommodations	1,000-1,999
Overstock.com	Electronic Shopping	1,000-1,999
Verizon Wireless	Telecommunications	1,000-1,999
Sizzler	Full-Service Restaurants	1,000-1,999
Innovative Staffing	Employment Services	1,000-1,999
O.C. Tanner	Jewelry Manufacturing, Wholesale, Retail	1,000-1,999
Costco	Warehouse Clubs and Supercenters	1,000-1,999
Snowbird	Ski Resort and Accommodations	1,000-1,999
Federal Express	Courier Services	1,000-1,999
QWEST	Telecommunications	1,000-1,999

(Source: Utah Department of Workforce Services; as of July 2014.)

APPENDIX D

FORM OF CONTINUING DISCLOSURE UNDERTAKING

This Continuing Disclosure Undertaking (the "Disclosure Undertaking") is executed and delivered by is executed and delivered by West Valley City, Utah (the "City"), in connection with the issuance of the Municipal Building Authority of West Valley City, Utah Lease Revenue and Refunding Bonds, Series 2016 (the "Bonds"). The Bonds are being issued pursuant to a General Indenture of Trust, dated as of [June 1], 2016 (the "General Indenture"), as supplemented by a First Supplemental Indenture of Trust, dated as of [June 1], 2016 (the "First Supplemental Indenture" and together with the General Indenture, the "Indenture"), each by and between the Municipal Building Authority of West Valley City, Utah (the "Issuer"), and _____, as trustee and a Master Lease Agreement, dated as of [June 1], 2016 (the "Master Lease") by and between the City and the Issuer. The City hereby covenants and agrees as follows:

Section 1. Purpose of the Disclosure Undertaking. This Disclosure Undertaking is being executed and delivered by the City for the benefit of the holders and beneficial owners of the Bonds and in order to assist the Participating Underwriters in complying with the Rule (as each such term is defined below).

Section 2. Definitions. In addition to the definitions set forth in the Indenture or parenthetically defined herein, which apply to any capitalized terms used in this Disclosure Undertaking unless otherwise defined in this Section, the following capitalized terms shall have the following meanings:

"Annual Report" shall mean any annual report provided by the City pursuant to, and as described in, Sections 3 and 4 of this Disclosure Undertaking.

"Business Day" means any day, other than a day on which banks located in New York, New York or the city in which the principal office of the Trustee is located are required or authorized by law or executive order to close, or on which the New York Stock Exchange is closed.

"Dissemination Agent" shall mean, initially, the City, or any successor Dissemination Agent designated in writing by the City and which has filed with the Trustee a written acceptance of such designation.

"Listed Events" shall mean any of the events listed in Section 5 of this Disclosure Undertaking.

"MSRB" shall mean the Municipal Securities Rulemaking Board, the address of which is 1300 I Street, NW, Suite 1000, Washington DC 20005-3314; Telephone (202) 838-1500; Fax (202) 898-1500, and the website address of which is www.msrb.org and www.emma.org (for municipal disclosures and market data).

"Official Statement" shall mean the Official Statement of the Issuer dated _____, 2016, relating to the Bonds.

"Participating Underwriter" shall mean any of the original underwriters of the Bonds required to comply with the Rule in connection with an offering of the Bonds.

"Rule" shall mean Rule 15c2-12(b)(5) adopted by the Securities and Exchange Commission under the Securities Exchange Act of 1934, as the same may be amended from time to time.

"State" shall mean the State of Utah.

Section 3. Provision of Annual Reports.

(a) The City shall, or shall cause the Dissemination Agent to, not later than six months following the end of each fiscal year of the City, commencing with the fiscal year ending June 30, 2015, provide to the MSRB an Annual Report which is consistent with the requirements of Section 4 of this Disclosure Undertaking. Not later than five (5) business days prior to said date, the City shall provide the Annual Report to the Dissemination Agent and the Trustee (if the Trustee is not the Dissemination Agent). In each case, the Annual Report of the City may be

submitted as a single document or as separate documents comprising a package, and may include by reference other information as provided in Section 4 of this Disclosure Undertaking; provided that the audited financial statements of the City may be submitted separately from the balance of the Annual Report, and later than the date required above for the filing of the Annual Report if they are not available by that date. If the City's fiscal year changes, it shall give notice of such change in the same manner as for Listed Event under Section 5(e).

(b) If by five (5) business days prior to the date specified in subsection (a) for providing the Annual Report to the MSRB, the Dissemination Agent has not received a copy of the Annual Report, the Dissemination Agent shall contact the City to determine if the City is in compliance with subsection (a).

(c) If the Dissemination Agent is unable to verify that an Annual Report has been provided to the MSRB by the date required in subsection (a), the Dissemination Agent shall send a notice to the MSRB.

(d) The Dissemination Agent shall:

(i) determine each year prior to the dates for providing the Annual Report of the City, the website address to which the MSRB directs the Annual Report to be submitted; and

(ii) file reports with the City certifying that its Annual Report has been provided pursuant to this Disclosure Undertaking, stating the date it was provided and listing the website address to which it was provided.

Section 4. Content of Annual Reports. The City's Annual Report shall contain or incorporate by reference the following:

(a) A copy of the City's annual financial statements prepared in accordance with generally accepted accounting principles audited by a firm of certified public accountants. If the City's audited annual financial statements are not available by the time specified in Section 3(a) above, unaudited financial statements will be provided as part of the Annual Report and audited financial statements will be provided when and if available.

(b) An update of the tabular information of the type contained in the Official Statement in the tables under the following headings: ["FINANCIAL INFORMATION REGARDING THE CITY—Sources of General Fund Revenues, "—General Governmental Expenditures," "—All Government Revenues by Source," "—General Governmental Tax Revenues by Source," "—Assessed and Estimated Actual Value of Taxable Property," "—Property Tax Levies and Collections," "—Principal Property Taxpayers For The Fiscal Year Ended June 30, 2015"; and "DEBT STRUCTURE OF THE AUTHORITY AND THE CITY—Debt Authorization and Limit."]

Any or all of the items listed above may be incorporated by reference from other documents, including official statements of debt issues with respect to which the City is an "obligated person" (as defined by the Rule) which have been made available to the public at the MSRB's internet website or the Securities and Exchange Commission. If the document incorporated by reference is a final official statement, it must be available from the MSRB. The City shall clearly identify each such document incorporated by reference.

Section 5. Reporting of Significant Events.

(a) Pursuant to the provisions of this Section 5, the City shall give or cause to be given, notice of the occurrence of any of the following Listed Events with respect to the Bonds in a timely manner but in no event more than ten (10) Business Days after the occurrence of the Listed Event:

1. Principal and interest payment delinquencies;

2. Unscheduled draws on debt service reserves reflecting financial difficulties;

3. Unscheduled draws on credit enhancements reflecting financial difficulties;

4. Substitution of credit or liquidity providers, or their failure to perform;

5. Adverse tax opinions or the issuance by the Internal Revenue Service of proposed or final determinations of taxability, Notices of Proposed Issue (IRS Form 5701-TEB) or other material notices or determinations with respect to the tax status of the Bonds or other material events affecting the tax status of the Bonds;

6. Defeasances;

7. Tender offers;

8. Bankruptcy, insolvency, receivership or similar proceedings; or

9. Rating changes.

(b) Pursuant to the provisions of this Section 5, the City shall give or cause to be given, notice of the occurrence of any of the following Listed Events with respect to the Bonds in a timely manner <u>but in no event more than ten (10) Business Days after the occurrence of the Listed Event, if material</u>:

1. Mergers, consolidations, acquisitions, the sale of all or substantially all of the assets of the obligated persons or their termination;

2. Appointment of a successor or additional trustee or the change of the name of a trustee;

3. Non-payment related defaults;

4. Modifications to the rights of the owners of the Bonds;

5. Bond calls; or

6. Release, substitution or sale of property securing repayment of the Bonds.

Section 6. <u>Termination of Reporting Obligation</u>. The City's obligations under this Disclosure Undertaking shall terminate upon the earlier of: (a) the date of legal defeasance, prior redemption or payment in full of all of the Bonds; (b) the date that the City shall no longer constitute an "obligated person" within the meaning of the Rule; or (c) the date on which those portions of the Rule which require this written undertaking are held to be invalid by a court of competent jurisdiction in a non-appealable action, have been repealed retroactively or otherwise do not apply to the Bonds.

Section 7. <u>Dissemination Agent</u>. The City may, from time to time, appoint or engage a Dissemination Agent to assist the City in carrying out its obligations under this Disclosure Undertaking, and may discharge any such Dissemination Agent, with or without appointing a successor Dissemination Agent. If at any time there is not any other designated Dissemination Agent, the Trustee shall be the Dissemination Agent. The initial Dissemination Agent shall be the City.

Section 8. <u>Amendment, Waiver</u>. Notwithstanding any other provision of this Disclosure Undertaking, the City and the Trustee may amend this Disclosure Undertaking (and the Trustee shall agree to any amendment so requested by the City), and any provision of this Disclosure Undertaking may be waived, without the consent of the holders or beneficial owners of the Bonds, if such amendment or waiver does not, in and of itself, cause the undertakings herein to violate the Rule, but taking into account any subsequent change in or official interpretation of the Rule. The City will provide notice of such amendment or waiver to the MSRB.

Section 9. <u>Additional Information</u>. Nothing in this Disclosure Undertaking shall be deemed to prevent the City from disseminating any other information, using the means of dissemination set forth in this Disclosure Undertaking or any other means of communication, or including any other information in any Annual Report or notice of occurrence of a Listed Event, in addition to that which is required by this Disclosure Undertaking. If the City chooses to include any information in any Annual Report or notice of occurrence of a Listed Event in addition to that which is specifically required by this Disclosure Undertaking, the City shall have no

obligation under this Disclosure Undertaking to update such information or include it in any future Annual Report or notice of occurrence of a Listed Event.

Section 10. Default. In the event of a failure of the City or the Trustee to comply with any provision of this Disclosure Undertaking, any holder or beneficial owner of the Bonds may take such actions as may be necessary and appropriate, including seeking mandate or specific performance by court order, to cause the City or the Trustee, as the case may be, to comply with its obligations under this Disclosure Undertaking. A default under this Disclosure Undertaking shall not be deemed an event of default under the Indenture or the Master Lease, and the sole remedy under this Disclosure Undertaking shall be an action to compel performance.

Section 11. Duties, Immunities and Liabilities of Dissemination Agent. The Dissemination Agent (if other than the Trustee or the Trustee in its capacity as Dissemination Agent) shall have only such duties as are specifically set forth in this Disclosure Undertaking, and the City agrees to indemnify and save the Dissemination Agent, its officers, directors, employees and agents, harmless against any loss, expense and liabilities which it may incur arising out of or in the exercise or performance of its powers and duties hereunder, including the costs and expenses (including attorneys' fees) of defending against any claim of liability, but excluding liabilities due to the Dissemination Agent's negligence, gross negligence or willful misconduct. The obligations of the City under this Section shall survive resignation or removal of the Dissemination Agent and payment of the Bonds.

Section 12. Beneficiaries. This Disclosure Undertaking shall inure solely to the benefit of the City, the Trustee, the Dissemination Agent, the Participating Underwriters, the holders and beneficial owners from time to time of the Bonds, and shall create no rights in any other person or entity.

Section 13. Counterparts. This Disclosure Undertaking may be executed in several counterparts, each of which shall be an original and all of which shall constitute but one and the same instrument.

DATE: _____2016.

WEST VALLEY CITY, UTAH

By:_____
Mayor

COUNTERSIGNED:

By:_____
City Recorder

APPENDIX E

FORM OF BOND COUNSEL OPINION

Upon the issuance of the Series 2016 Bonds, Ballard Spahr LLP, Bond Counsel to the Authority, proposes to issue its approving opinion in substantially the following form, with respect to the Series 2016 Bonds.

We have acted as bond counsel for the Municipal Building Authority of West Valley City, Utah (the "Authority"), in connection with the issuance by the Authority of $_____ aggregate principal amount of its Lease Revenue and Refunding Bonds, Series 2016 (the "Series 2016 Bonds"). The Series 2016 Bonds are being issued pursuant to (i) the Local Building Authority Act, Title 17D, Chapter 2, Utah Code Annotated, 1953, as amended, the Local Government Bond Act, Title 11, Chapter 14, Utah Code Annotated, 1953, as amended, and the Utah Refunding Bond Act, Title 11, Chapter 27, Utah Code Annotated, 1953, as amended; (ii) a resolution of the governing body of the Authority adopted on May 10, 2016, and a resolution of the City Council of West Valley City, Utah (the "City") adopted on May 10, 2016; (iii) a General Indenture of Trust dated as of [June 1], 2016, as supplemented by a First Supplemental Indenture of Trust, dated as of [June 1], 2016 (together, the "Indenture"), by and between the Authority and _____, as trustee. The Series 2016 Bonds are being issued for the purpose of (i) financing the acquisition and construction of a new fire station and the remodeling of an existing fire station and related improvements (the "Fire Station Projects"); (ii) refinancing the Maverik Center (the "Maverik Center Project" and together with the Fire Station Projects, the "Project"), by refunding the Authority's outstanding lease revenue bonds relating to the Maverik Center (the "Refunded Bonds"); [(iii) funding a debt service reserve fund]; and (iv) paying costs associated with the issuance of the Series 2016 Bonds.

The Project has been leased by the Authority to the City on an annually renewable basis and with an option to purchase, exercisable by the City, pursuant to the terms of a Master Lease Agreement dated as of [June 1], 2016 (the "Lease") between the Authority and the City. Payments by the City under the Lease may be made only from funds which are budgeted and appropriated by the City for such purpose. Except to the extent payable from the proceeds of the Series 2016 Bonds and income from the investment thereof, the proceeds of certain insurance policies, performance bonds, condemnation awards and liquidation proceeds, if any, the Series 2016 Bonds are payable solely from, and are secured by a pledge of, rentals derived by the Authority under the Lease. The Indenture provides that the Series 2016 Bonds and the interest thereon (i) are not general obligations, but are special, limited obligations of the Authority, (ii) do not constitute an indebtedness of the City within the meaning of any constitutional provision or statutory limitation, and (iii) do not constitute or give rise to a pecuniary liability of the City or a charge against the general credit or taxing powers of the City. Neither the City nor the Authority on its behalf has pledged the credit of the City to the payment of the Series 2016 Bonds or the interest thereon or rentals under the Lease.

Our services as bond counsel have been limited to the preparation of the legal proceedings and supporting certificates authorizing the issuance of the Series 2016 Bonds under the applicable laws of the State of Utah and to a review of the transcript of such proceedings and certificates. As to questions of fact material to our opinion, we have relied upon the certified proceedings and other certificates of public officials furnished to us without undertaking to verify the same by independent investigation. Our examination has been limited to the foregoing as they exist or are in effect as of the date hereof. Our opinion is limited to the matters expressly set forth herein, and we express no opinion concerning any other matters.

Based on our examination and the foregoing, we are of the opinion as of the date hereof and under existing law, as follows:

1. The Authority has been created as a nonprofit corporation under the Utah Revised Nonprofit Corporation Act, Title 16, Chapter 6a, Utah Code Annotated 1953, as amended, and is validly organized and existing under the provisions of said act, with powers, among others, to issue the Series 2016 Bonds and to perform its obligations under the Indenture and the Lease.

2. The City is a political subdivision and body politic, validly existing under the Constitution and laws of the State of Utah.

3. The Lease has been authorized, executed and delivered by the City and the Authority, and constitutes a valid and binding obligation enforceable against the City and the Authority.

4. The Indenture has been authorized, executed and delivered by the Authority and constitutes a valid and binding obligation enforceable against the Authority.

5. The Series 2016 Bonds have been authorized by the Authority, executed and delivered by authorized officials of the Authority and are valid and binding special, limited obligations of the Authority, and the Series 2016 Bonds do not constitute a general obligation indebtedness of the Authority or the City within the meaning of any State of Utah constitutional provision or statutory limitation, or a charge against the general credit of the Authority or the City.

6. Interest on the Series 2016 Bonds is excludable from gross income for purposes of federal income tax under existing laws as enacted and construed on the date of initial delivery of the Series 2016 Bonds, assuming the accuracy of the certifications of the Authority and the City and continuing compliance by the Authority and the City with the requirements of the Internal Revenue Code of 1986. Interest on the Series 2016 Bonds is not an item of tax preference for purposes of either individual or corporate federal alternative minimum tax ("AMT"); however, interest on Series 2016 Bonds held by a corporation (other than an S corporation, regulated investment company, or real estate investment trust) may be indirectly subject to federal AMT because of its inclusion in the adjusted current earnings of a corporate holder.

7. Interest on the Series 2016 Bonds is exempt from State of Utah individual income taxes.

In rendering our opinion, we wish to advise you that:

(a) The rights of the holders of the Series 2016 Bonds and the enforceability thereof and of the documents identified in this opinion may be subject to bankruptcy, insolvency, reorganization, arrangement, fraudulent conveyance, moratorium and other laws relating to or affecting creditors' rights heretofore or hereafter enacted to the extent constitutionally applicable, and their enforcement may also be subject to the application of equitable principles and the exercise of judicial discretion in appropriate cases;

(b) We express no opinion herein as to the accuracy, adequacy, or completeness of the Official Statement or any other offering material relating to the Series 2016 Bonds; and

(c) We express no opinion regarding any other tax consequences relating to the ownership or disposition of, or the accrual or receipt of interest on, the Series 2016 Bonds.

Respectfully submitted,

APPENDIX F

PROVISIONS REGARDING BOOK-ENTRY-ONLY SYSTEM

DTC will act as securities depository for the Series 2016 Bonds. The Series 2016 Bonds will be issued as fully-registered securities registered in the name of Cede & Co. (DTC's partnership nominee) or such other name as may be requested by an authorized representative of DTC. One fully-registered Bond certificate will be issued for each maturity of the Series 2016 Bonds, each in the aggregate principal amount of such maturity, and will be deposited with DTC or its agent.

DTC, the world's largest depository, is a limited-purpose trust company organized under the New York Banking Law, a "banking organization" within the meaning of the New York Banking Law, a member of the Federal Reserve System, a "clearing corporation" within the meaning of the New York Uniform Commercial Code, and a "clearing agency" registered pursuant to the provisions of section 17A of the Securities Exchange Act of 1934. DTC holds and provides asset servicing for over 3.5 million issues of U.S. and non-U.S. equity issues, corporate and municipal debt issues, and money market instruments (from over 100 countries) that DTC's participants ("Direct Participants") deposit with DTC. DTC also facilitates the post-trade settlement among Direct Participants of sales and other securities transactions in deposited securities, through electronic computerized book-entry transfers and pledges between Direct Participants' accounts. This eliminates the need for physical movement of securities certificates. Direct Participants include both U.S. and non-U.S. securities brokers and dealers, banks, trust companies, clearing corporations and certain other organizations. DTC is a wholly owned subsidiary of The Depository Trust & Clearing Corporation ("DTCC"). DTCC is the holding company for DTC, National Securities Clearing Corporation and Fixed Income Clearing Corporation, all of which are registered clearing agencies. DTCC is owned by the users of its regulated subsidiaries. Access to the DTC system is also available to others such as both U.S. and non-U.S. securities brokers and dealers, banks, trust companies, and clearing corporations that clear through or maintain a custodial relationship with a Direct Participant, either directly or indirectly ("Indirect Participants"). DTC has Standard & Poor's rating of AA+. The DTC Rules applicable to its Participants are on file with the Securities and Exchange Commission. More information about DTC can be found at www.dtcc.com.

Purchases of Series 2016 Bonds under the DTC system must be made by or through Direct Participants, which will receive a credit for the Series 2016 Bonds on DTC's records. The ownership interest of each actual purchaser of each Bond ("Beneficial Owner") is in turn to be recorded on the Direct and Indirect Participants' records. Beneficial Owners will not receive written confirmation from DTC of their purchase. Beneficial Owners are, however, expected to receive written confirmations providing details of the transaction, as well as periodic statements of their holdings, from the Direct or Indirect Participant through which the Beneficial Owner entered into the transaction. Transfers of ownership interests in the Series 2016 Bonds are to be accomplished by entries made on the books of Direct and Indirect Participants acting on behalf of Beneficial Owners. Beneficial Owners will not receive certificates representing their ownership interests in Series 2016 Bonds, except in the event that use of the book-entry system for the Series 2016 Bonds is discontinued.

To facilitate subsequent transfers, all Series 2016 Bonds deposited by Direct Participants with DTC are registered in the name of DTC's partnership nominee, Cede & Co., or such other name as may be requested by an authorized representative of DTC. The deposit of Series 2016 Bonds with DTC and their registration in the name of Cede & Co. or such other DTC nominee do not effect any change in beneficial ownership. DTC has no knowledge of the actual Beneficial Owners of the Series 2016 Bonds; DTC's records reflect only the identity of the Direct Participants to whose accounts such Series 2016 Bonds are credited, which may or may not be the Beneficial Owners. The Direct and Indirect Participants will remain responsible for keeping account of their holdings on behalf of their customers.

Conveyance of notices and other communications by DTC to Direct Participants, by Direct Participants to Indirect Participants, and by Direct Participants and Indirect Participants to Beneficial Owners will be governed by arrangements among them, subject to any statutory or regulatory requirements as may be in effect from time to time. Beneficial Owners of Series 2016 Bonds may wish to take certain steps to augment the transmission to them of notices of significant events with respect to the Series 2016 Bonds, such as redemptions, tenders, defaults, and proposed amendments to the Bond documents. For example, Beneficial Owners of Series 2016 Bonds may wish to

ascertain that the nominee holding the Series 2016 Bonds for their benefit has agreed to obtain and transmit notices to Beneficial Owners.

Redemption notices shall be sent to DTC. If less than all of the Series 2016 Bonds within an issue are being redeemed, DTC's practice is to determine by lot the amount of the interest of each Direct Participant in such issue to be redeemed.

Neither DTC nor Cede & Co. (nor any other DTC nominee) will consent or vote with respect to Series 2016 Bonds unless authorized by a Direct Participant in accordance with DTC's Procedures. Under its usual procedures, DTC mails an Omnibus Proxy to the City as soon as possible after the record date. The Omnibus Proxy assigns Cede & Co.'s consenting or voting rights to those Direct Participants to whose accounts Series 2016 Bonds are credited on the record date (identified in a listing attached to the Omnibus Proxy).

Redemption proceeds, distributions, and dividend payments on the Series 2016 Bonds will be made to Cede & Co., or such other nominee as may be requested by an authorized representative of DTC. DTC's practice is to credit Direct Participants' accounts upon DTC's receipt of funds and corresponding detail information from the City or the Paying Agent, on payable date in accordance with their respective holdings shown on DTC's records. Payments by Participants to Beneficial Owners will be governed by standing instructions and customary practices, as is the case with securities held for the accounts of customers in bearer form or registered in "street name," and will be the responsibility of such Participant and not of DTC, the Paying Agent, or the City, subject to any statutory or regulatory requirements as may be in effect from time to time. Payment of redemption proceeds, distributions, and interest payments to Cede & Co. (or such other nominee as may be requested by an authorized representative of DTC) is the responsibility of the City or the Paying Agent, disbursement of such payments to Direct Participants will be the responsibility of DTC, and disbursement of such payments to the Beneficial Owners will be the responsibility of Direct and Indirect Participants.

DTC may discontinue providing its services as depository with respect to the Series 2016 Bonds at any time by giving reasonable notice to the Authority or the Paying Agent. Under such circumstances, in the event that a successor depository is not obtained, Bond certificates are required to be printed and delivered.

The Authority may decide to discontinue use of the system of book-entry-only transfers through DTC (or a successor securities depository). In that event, Bond certificates will be printed and delivered to DTC.

The information in this section concerning DTC and DTC's book-entry system has been obtained from sources that the Authority believes to be reliable, but the Authority takes no responsibility for the accuracy thereof.

Item: _____
Fiscal Impact: _____
Funding Source: _____
Account #: _____
Budget Opening Required: _____

ISSUE:

A Resolution adopting a tentative budget for West Valley City for the Fiscal Year commencing July 1, 2016 and ending June 30, 2017.

SYNOPSIS:

This resolution adopts the tentative budget for West Valley City for the 2016-2017 fiscal year and sets a date for public comment at a hearing to be held on August 9, 2016.

BACKGROUND:

West Valley City will adopt a tentative budget that will be made available for public inspection during regular office hours in the City's Recorder's office and gave notice of a hearing to receive public comment, before the final adoption of this tentative budget for FY 2016-2017.

RECOMMENDATION:

City staff recommends approval of the resolution.

WEST VALLEY CITY, UTAH

RESOLUTION NO. _____

A RESOLUTION ADOPTING A TENTATIVE BUDGET FOR THE FISCAL YEAR COMMENCING JULY 1, 2016, AND ENDING JUNE 30, 2017; AND SETTING AUGUST 9, 2016, AS THE DATE FOR PUBLIC HEARING.

WHEREAS, the West Valley City Manager has filed a proposed budget with the West Valley City Council for the fiscal year commencing July 1, 2016, and ending June 30, 2017; and

WHEREAS, the City Council has carefully reviewed and considered the budget and has determined that it should be tentatively adopted; and

WHEREAS, State laws governing budget adoption and setting of tax rates, and federal laws governing receipt and disbursement of federal funds, have been or will be complied with; and

WHEREAS, it is the intent and desire of West Valley City to comply with all applicable State and local laws regarding the adoption of the budget; and

WHEREAS, the City Council of West Valley City, Utah, hereby determines that it is in the best interests of the citizens of West Valley City to adopt a tentative budget for West Valley City for the 2017 fiscal year;

NOW, THEREFORE, BE IT RESOLVED by the City Council of West Valley City, Utah, as follows:

1. The budget attached hereto (herein the "Tentative Budget"), in the amount shown in Exhibit "A" for the following funds: General; Capital Improvement; Golf Courses; "C" Road; Fitness Center; Hale Centre Theatre; Arena; Sanitation; Storm Water Utility; Cultural Celebration Center; Utah Cultural Celebration Center Foundation; Grants; and Road, Park, Fire, Police, Flood Impact Fees, and Ambulance Fund, is hereby tentatively adopted pursuant to Section 10-6-101, et seq., Utah Code Annotated 1953, as amended.

2. A public hearing to consider the Tentative Budget shall be held on August 9, 2016, at 6:30 p.m., in the West Valley City Council chambers located at 3600 Constitution Boulevard, West Valley City, Utah. The City Recorder is hereby directed to publish or cause to be published, at least seven days prior to the hearing and in at least one issue of a newspaper of general circulation published in Salt Lake County, notice of such hearing as well as the location of the Recorder's Office where the Tentative Budget will be available for public inspection.

3. Citizens in attendance at the public hearing shall be permitted to provide written or oral comment for or against the Tentative Budget or any of its individual funds, and for or against the relationship of Community Development Block Grant funds and other federal funds to the Tentative Budget.

4. A copy of the Tentative Budget and a summary of the Tentative Budget and the City's proposed use of the various federal funds in the context of the Tentative Budget shall be placed on record at the City Recorder's Office at the same address indicated above, at least ten days prior to the adoption of the final Budget, for inspection by the general public during normal office hours.

PASSED, APPROVED, and **MADE EFFECTIVE** this _____ day of _____, 2016.

WEST VALLEY CITY

_____
MAYOR

ATTEST:

_____
CITY RECORDER

GENERAL FUND - FUND 10
REVENUE STATEMENT

	Actual 2012-2013	Actual 2013-2014	Actual 2014-2015	Adopted 2015-2016	Proposed 2016-2017	Percent Change
PROPERTY TAX:						
Current Year	22,071,701	21,329,811	21,496,850	21,953,357	23,114,258	5.3%
Prior Year	636,420	518,434	655,618	657,383	487,144	-25.9%
Street Lights	413,240	444,411	453,288	453,288	426,472	-5.9%
Fitness Center	1,838,090	2,055,915	2,097,033	2,097,033	1,972,930	-5.9%
Vehicle Tax	1,749,759	1,664,638	1,731,274	1,635,384	1,704,858	4.2%
Total Property Tax	**26,709,210**	**26,013,209**	**26,434,063**	**26,796,445**	**27,705,662**	**3.4%**
SALES TAX:						
General Sales Tax	20,504,722	21,532,447	22,980,867	23,753,933	25,386,857	6.9%
Total Sales Tax	**20,504,722**	**21,532,447**	**22,980,867**	**23,753,933**	**25,386,857**	**6.9%**
UTILITY TAX:						
Cable TV/Bch Adv	635,588	660,064	653,573	670,924	686,494	2.3%
Telecommunications	1,834,892	1,613,611	1,505,472	1,569,439	1,424,554	-9.2%
Electricity	5,208,728	5,307,959	5,566,219	5,992,132	5,998,973	0.1%
Gas	2,174,716	2,397,290	2,281,721	2,725,269	2,627,380	-3.6%
Total Utility Tax	**9,853,924**	**9,978,924**	**10,006,985**	**10,957,764**	**10,737,401**	**-2.0%**
WEST RIDGE AMPHITHEATER:						
Amp. Ticket Revenues	188,573	188,417	291,286	188,000	250,000	33.0%
Total Westridge Amphitheater	**188,573**	**188,417**	**291,286**	**188,000**	**250,000**	**33.0%**
SPECIAL IMPROVEMENT DISTRICTS:						
5600 West SID 2003-1	211,260	218,159	178,534	154,000	0	-100.0%
Total Special Imp Dist	**211,260**	**218,159**	**178,534**	**154,000**	**0**	**-100.0%**
LICENSES AND PERMITS:						
Business & Econ. Services	1,158,381	1,159,000	1,149,624	1,160,000	1,160,000	0.0%
Animal Licenses	97,679	100,041	104,608	100,000	101,000	1.0%
Building Permits	1,284,824	1,610,234	1,342,543	1,500,000	1,400,000	-6.7%
Subdivision Fees	231,247	223,903	269,689	191,500	152,000	-20.6%
Disporportionate Service	532,534	528,973	545,440	520,000	500,000	-3.8%
Total Licenses & Permits	**3,304,665**	**3,622,151**	**3,411,904**	**3,471,500**	**3,313,000**	**-4.6%**

GENERAL FUND - FUND 10

REVENUE STATEMENT

	Actual 2012-2013	Actual 2013-2014	Actual 2014-2015	Adopted 2015-2016	Proposed 2016-2017	Percent Change
ST. LIQUOR & BEER TAX:						
St. Liquor & Beer Tax	141,582	0	0	0	0	0.0%
Total Liquor & Beer Tax	**141,582**	**0**	**0**	**0**	**0**	**0.0%**
MISCELLANEOUS:						
Taylorsville DS Reimb.	0	0	136,926	137,000	137,000	0.0%
Taylorsville Contract Services	286,063	286,360	264,227	320,000	320,000	0.0%
Animal Shelter Vaccinations	43,940	45,659	33,712	35,000	37,000	5.7%
Animal Shelter Misc. Fees	42,702	36,297	40,682	40,000	37,000	-7.5%
Animal Sterilization	35,703	39,983	42,884	35,000	42,000	20.0%
Animal Shelter Donations	0	0	7,646	0	5,000	100.0%
Police Reports	65,015	96,524	106,570	75,000	90,000	20.0%
Police Reimbursement	295,819	186,895	253,732	250,000	240,000	-4.0%
Fingerprinting/Work Orders	19,487	15,953	16,546	15,000	10,000	-33.3%
Miscellaneous	199,234	191,958	163,635	155,000	155,000	0.0%
Donations/Contributions	11,675	5,000	104,885	15,836	15,836	0.0%
Fire Prevention/Haz Mat	158,588	177,237	3,696	175,000	175,000	0.0%
Harman Home Maint., etc.	40,000	40,000	40,000	40,000	40,000	0.0%
Harman Home SL CO.	12,276	14,419	15,774	15,954	15,954	0.0%
Indigent Defense	35,815	39,983	47,245	39,000	12,000	-69.2%
District Court Fines	0	0	0	0	36,000	100.0%
Excavation Perm-Prop Bond	92,383	52,236	105,207	75,000	100,000	33.3%
Rent-Housing Authority	42,000	42,000	42,000	42,000	42,000	0.0%
Rental Properties	17,991	16,800	16,801	15,000	15,000	0.0%
Tower Lease	73,968	85,170	79,425	85,725	54,285	-36.7%
Park Reservations/Activities	9,875	18,459	12,499	5,000	5,000	0.0%
Maverik Center Equip. Lease	120,000	120,000	120,000	120,000	0	-100.0%
Court Maintenance	29,837	19,118	29,837	20,000	14,000	-30.0%
Professional Shop Services	120,229	110,793	125,841	100,000	100,000	0.0%
STP Engineering Fees	0	0	119,604	100,000	0	-100.0%
Engineer Consultant Fees CED	0	0	14,772	0	0	0.0%
Rent-Redevelop Agency	25,000	25,000	25,000	25,000	25,000	0.0%
Total Miscellaneous	**1,777,600**	**1,665,844**	**1,969,146**	**1,935,515**	**1,723,075**	**-11.0%**
JUSTICE COURT:						
Small Claims Fees	124,465	149,780	150,010	145,000	102,878	-29.1%
Traffic Fines	2,991,451	2,744,853	2,967,008	3,675,000	2,607,413	-29.1%
Sub-Total Courts	3,115,916	2,894,633	3,117,018	3,820,000	2,710,290	-29.1%
Civil Fines and Penalties						
ACE Program	69,525	51,926	62,229	100,000	70,950	-29.1%
Bail Fines & Forfeitures	10	0	0	2,000	1,419	-29.1%
Parking Ticket Fines	38,786	15,821	10,162	15,000	10,643	-29.1%
Civil Penalties	368,590	370,217	356,313	400,000	283,800	-29.1%
Sub-Total Civil	476,911	437,964	428,704	517,000	366,812	-29.1%
Total Justice Court	**3,592,827**	**3,332,597**	**3,545,722**	**4,337,000**	**3,077,102**	**-29.1%**

GENERAL FUND - FUND 10

REVENUE STATEMENT

	Actual 2012-2013	Actual 2013-2014	Actual 2014-2015	Adopted 2015-2016	Proposed 2016-2017	Percent Change
INTEREST:						
Investment Interest	180,902	132,586	137,873	180,000	180,000	0.0%
RDA Interest	248,640	248,640	248,640	248,640	248,640	0.0%
Total Interest	**429,542**	**381,226**	**386,513**	**428,640**	**428,640**	**0.0%**
OTHER:						
Revenue Other Source	0	0	456,228	2,198,650		-100.0%
Reserves	0	0	0	742,000	250,000	-66.3%
Sale of Land (Other)	224,697	0	0	0		0.0%
Sale of Land (RDA)	0	0	0	0		0.0%
Total Other	**224,697**	**0**	**456,228**	**2,940,650**	**250,000**	**-91.5%**
Subtotal	**66,938,602**	**66,932,975**	**69,661,248**	**74,963,447**	**72,871,737**	**-2.8%**
RESTRICTED FUNDS:						
Forfeited Assets	0	64,996	107,018	0	0	0.0%
Bond Proceeds	7,737,358	475,533	0	0	0	0.0%
Bond Interest	37,663	25,720	22,842	0	0	0.0%
Total Restricted Funds	**7,775,021**	**566,249**	**129,860**	**0**	**0**	**0.0%**
Grand Total	**74,713,623**	**67,499,223**	**69,791,108**	**74,963,447**	**72,871,737**	**-2.8%**

GENERAL FUND - FUND 10
EXPENDITURE STATEMENT

	Actual 2012-2013	Actual 2013-2014	Actual 2014-2015	Adopted 2015-2016	Proposed 2016-2017	Percent Change
LEGISLATIVE:						
City Council	773,774	711,651	612,132	762,647	755,771	-0.9%
Elections	15,929	156,715	17,791	237,789	237,789	0.0%
Total Legislative	**789,703**	**868,366**	**629,923**	**1,000,436**	**993,560**	**-0.7%**
ADMINISTRATIVE:						
City Manager	629,428	687,519	711,746	746,489	935,469	25.3%
Justice Court	1,837,663	1,785,445	1,830,535	1,916,039	1,953,886	2.0%
Information Technology	1,825,663	1,700,249	1,685,089	1,700,277	1,697,084	-0.2%
Central Services	2,252,132	2,493,249	2,767,949	2,557,449	2,557,449	0.0%
Communications	101,170	109,809	108,431	111,244	113,432	2.0%
Human Resources	553,669	532,767	438,632	681,763	916,593	34.4%
Events/Promotion	95,413	0	0	0	0	0.0%
Community & Media Relations	308,721	438,563	632,038	617,064	631,462	2.3%
Recorder	597,782	610,473	627,502	624,251	399,100	-36.1%
Total Administrative	**8,201,641**	**8,358,074**	**8,801,922**	**8,954,576**	**9,204,475**	**2.8%**
NON-DEPARTMENTAL						
SID Sales Tax Rebate	51,715	133,012	114,223	80,000	0	-100.0%
UTOPIA	3,822,129	4,078,518	4,131,251	4,354,337	4,430,597	1.8%
Capital Projects/Fleet Xfer to CIP	450,000	675,000	0	1,000,000		-100.0%
Rental Home Expense	4,184	6,596	7,279	15,000	15,000	0.0%
Council Contingency Misc	(671,139)	(267,885)	(137,976)	0	1,100,000	100.0%
Retirement Incentives	78,863	48,611	35,368	0	0	0.0%
Wage Under Runs	0	0	0	(600,000)		-100.0%
Storm Water (Prof.Service)	(373,344)	(373,344)	(373,344)	(373,344)	(373,344)	0.0%
Sanitation (Prof.Service)	(484,131)	(484,131)	(484,131)	(484,131)	(484,131)	0.0%
Transfers In	(1,684,500)	(32,660)	(244,845)	0	0	0.0%
Benefits Accrual	1,224,625	1,345,366	921,745	1,422,000	914,400	-35.7%
Fitness Center / PT	2,207,914	2,431,343	2,484,424	2,343,745	1,876,524	-19.9%
Hale Center Theatre	69,188	69,188	69,188	69,188	69,188	0.0%
Maverik Center (Arena Fund)	1,259,602	506,283	844,671	850,000	850,000	0.0%
Cultural Center	538,855	795,903	1,012,550	909,425	866,843	-4.7%
Stonebridge Golf Course	1,598,801	1,360,291	350,000	1,540,955	1,333,563	-13.5%
Transfer Out	0	443,122	662,855	0	0	0.0%
Westfest	20,000	0	0	25,000	25,000	0.0%
Rolling Stock	1,495	0	0	0	0	0.0%
Special Projects	22,847	0	0	100,000	0	-100.0%
Utilities	524,964	547,607	551,181	500,320	500,320	0.0%
Total Non-Departmental	**8,662,068**	**11,282,820**	**9,944,439**	**11,752,495**	**11,123,960**	**-5.3%**

GENERAL FUND - FUND 10
EXPENDITURE STATEMENT

	Actual 2012-2013	Actual 2013-2014	Actual 2014-2015	Adopted 2015-2016	Proposed 2016-2017	Percent Change
DEBT SERVICE:						
Animal Shelter/CPD Facility	620,997	621,892	145,550	204,950	995,750	385.9%
Public Safety/Stonebridge	609,193	612,548	610,567	1,764,663	1,766,769	0.1%
Fitness Center Refinance	1,480,425	1,598,550	1,601,950	1,601,550	1,604,150	0.2%
Maverik Center Equipment Lease	165,559	166,249	169,332	661,434	0	-100.0%
City Portion Equipment Lease	42,549	33,258	33,875	132,319	0	-100.0%
Cultural Arts	0	0	0	0	0	0.0%
SID 2003-1	246,874	246,874	246,874	246,875	0	-100.0%
Vehicle Lease S'09	272,619	272,619	0	0	0	0.0%
Vehicle Lease S'12	94,935	0	0	0	0	0.0%
Bond Series 2008	0	0	475,462	0	0	0.0%
Bond Fees	197,515	14,015	9,963	37,110	45,000	21.3%
Fire Truck Lease S2012	69,217	69,218	69,217	69,218	69,218	0.0%
Ladder Truck Equip Lease CIP Trans	0	111,047	110,081	0	0	0.0%
Vehicle Lease S'07 CIP transfer	223,896	0	0	0	0	0.0%
Vehicle Lease S'09 CIP transfer	272,619	272,619	0	0	0	0.0%
Vehicle Lease S'10 CIP transfer	78,588	65,453	65,453	65,453	0	-100.0%
Vehicle Lease S'12 CIP transfer	102,000	94,935	94,935	94,935	94,935	0.0%
Vehicle Lease S'13 CIP transfer	0	0	68,591	68,591	68,591	0.0%
Fire Truck Refurbish CIP Transfer	28,000	23,346	23,346	23,346	23,346	0.0%
Fire Truck Lease 2014 CIP Transfer	0	0	130,000	139,950	139,950	0.0%
Fire Station #75/ PW (Transfer BA)	441,560	441,360	440,860	441,460	333,400	-24.5%
Fire Station #74 (Transfer to BA)	288,973	218,731	222,682	225,400	244,348	8.4%
Bond Defeasance	7,022,305	0	0	0	0	0.0%
Subtotal	**12,257,823**	**4,862,713**	**4,518,738**	**5,777,253**	**5,385,457**	**-6.8%**
Transfers In:						
Fire Station Impact Fees	0	(40,000)	(40,000)	(40,000)	(40,000)	0.0%
RDA (UCCC)	0	0	0	0	0	0.0%
Fitness Center Refinance	(1,485,626)	(1,603,750)	(1,607,150)	(1,606,750)	(1,609,350)	0.2%
Stonebridge	0	0	0	(1,149,533)	(1,150,902)	0.1%
Maverik Center Equip. (City portion)	(42,549)	(33,258)	(33,875)	(132,319)	0	-100.0%
Sanitation	0	(6,500)	0	0	0	0.0%
Subtotal	**(1,528,175)**	**(1,683,508)**	**(1,681,025)**	**(2,928,602)**	**(2,800,252)**	**-4.4%**
Total Debt Service	**10,729,648**	**3,179,204**	**2,837,713**	**2,848,651**	**2,585,205**	**-9.2%**

GENERAL FUND - FUND 10
EXPENDITURE STATEMENT

	Actual 2012-2013	Actual 2013-2014	Actual 2014-2015	Adopted 2015-2016	Proposed 2016-2017	Percent Change
COMMUNITY & ECONOMIC DEVELOPMENT:						
Administration	262,990	250,234	279,545	267,997	295,433	10.2%
Planning Commission	13,120	9,455	12,087	10,276	15,975	55.5%
Board of Adjustment	1,482	736	650	4,364	4,162	-4.6%
Building Inspection	688,049	721,889	734,688	845,329	860,917	1.8%
Planning & Zoning	559,348	535,715	600,696	631,115	635,403	0.7%
Total Comm. & Econ. Dev.	**1,524,989**	**1,518,029**	**1,627,666**	**1,759,081**	**1,811,890**	**3.0%**
FINANCE:						
Administration	329,494	379,279	401,879	476,983	497,406	4.3%
Purchasing	84,627	89,584	91,857	94,263	107,850	14.4%
Business Licenses	190,186	200,835	209,351	213,849	215,437	0.7%
Treasury	243,988	259,474	248,966	272,804	281,588	3.2%
Accounting	408,848	387,589	376,897	442,330	429,515	-2.9%
Budget & Disbursements	225,494	235,214	249,932	258,712	280,238	8.3%
Total Finance	**1,482,637**	**1,551,975**	**1,578,882**	**1,758,941**	**1,812,034**	**3.0%**
FIRE:						
Administration	495,485	540,688	647,578	758,751	764,209	0.7%
Emergency Operations	6,656,451	7,059,811	7,576,780	7,701,832	7,748,052	0.6%
Fire Prevention	214,731	271,795	254,449	333,325	386,623	16.0%
Logistics	265,337	341,349	313,939	379,981	379,981	0.0%
Special Operations	22,622	37,721	24,707	35,801	35,801	0.0%
Development Services	133,627	146,125	141,085	153,861	153,085	-0.5%
Medical Services	302,124	281,413	301,991	328,298	329,556	0.4%
Total Fire	**8,090,377**	**8,678,902**	**9,260,529**	**9,691,849**	**9,797,307**	**1.1%**
LAW:						
Civil/Prosecutor/Risk	1,802,028	1,963,206	2,108,964	2,369,081	2,110,553	-10.9%
Risk Financing	594,616	695,467	860,773	1,105,365	850,365	-23.1%
Victim Assistance	95,627	112,896	129,327	267,558	283,312	5.9%
Total Law	**2,492,271**	**2,771,569**	**3,099,064**	**3,742,004**	**3,244,230**	**-13.3%**
PARKS & RECREATION:						
Parks & Rec. Administration	354,877	366,679	412,172	407,589	414,975	1.8%
Park Maintenance	1,328,017	1,315,223	1,331,270	1,407,787	1,406,626	-0.1%
Recreation	11,926	11,939	26,274	38,993	39,381	1.0%
Harman Home Operations	156,612	153,266	161,185	164,924	173,897	5.4%
Total Parks & Recreation	**1,851,432**	**1,847,107**	**1,930,901**	**2,019,293**	**2,034,879**	**0.8%**

GENERAL FUND - FUND 10
EXPENDITURE STATEMENT

	Actual 2012-2013	Actual 2013-2014	Actual 2014-2015	Adopted 2015-2016	Proposed 2016-2017	Percent Change
POLICE:						
Administration	21,514,193	21,033,180	22,372,278	23,439,010	22,898,476	-2.3%
Records	20,613	27,666	31,190	45,200	45,200	0.0%
Training	11,576	191,363	140,640	231,083	161,083	-30.3%
Crossing Guards	303,241	336,625	334,277	509,745	512,573	0.6%
Evidence	16,327	20,151	23,349	20,000	20,000	0.0%
Forensics	14,022	27,140	22,116	19,750	19,750	0.0%
Community Policing	12,614	17,162	5,418	22,710	22,710	0.0%
Investigation	75,340	47,389	47,464	25,641	25,641	0.0%
Uniform Patrol	56,933	81,393	174,582	84,410	84,410	0.0%
S.W.A.T. Unit	52,920	35,476	43,307	55,560	55,560	0.0%
Special Operations	183,989	27,980	31,280	30,800	30,800	0.0%
Inteligence/Interal Affairs	0	0	21,919	0	0	0.0%
Police Grants	(407,908)	(231,863)	(423,692)	156,641	(491,000)	-413.5%
Total Police	**21,853,860**	**21,613,662**	**22,824,128**	**24,640,550**	**23,385,203**	**-5.1%**
PUBLIC WORKS:						
Administration	357,861	350,320	381,843	327,812	334,643	2.1%
Streets	928,778	889,808	959,802	1,074,551	1,071,042	-0.3%
Transportation	232,530	248,904	254,071	276,725	280,676	1.4%
Engineering	555,879	613,052	603,791	641,905	753,605	17.4%
Street Lights	518,992	505,173	498,059	581,012	583,896	0.5%
Public Facilities	1,007,088	1,023,010	1,064,791	1,071,111	1,083,773	1.2%
Fleet Maintenance	724,452	740,627	779,453	821,444	847,383	3.2%
Total Public Works	**4,325,580**	**4,370,894**	**4,541,810**	**4,794,560**	**4,955,018**	**3.3%**
COMMUNITY PRESERVATION						
Administration	290,420	305,589	252,825	243,348	248,888	2.3%
Animal Control	944,216	1,005,787	1,009,646	1,119,914	1,146,985	2.4%
Ordinance Enforcement	576,961	570,335	623,564	637,749	636,553	-0.2%
Total Community Preservation	**1,811,597**	**1,881,711**	**1,886,035**	**2,001,011**	**2,032,426**	**1.6%**
Total Operating Expenses	**71,815,803**	**67,922,313**	**68,963,012**	**74,963,447**	**72,980,187**	**-2.6%**
RESTRICTED FUNDS:						
Forfeited Assets	0	0	0	0	0	0.0%
Total Restricted Funds	**0**	**0**	**0**	**0**	**0**	**0.0%**
Grand Total	**71,815,803**	**67,922,313**	**68,963,012**	**74,963,447**	**72,980,187**	**-2.6%**

WEST VALLEY CITY "C" ROADS - FUND 11
REVENUE STATEMENT

	Actual 2012-2013	Actual 2013-2014	Actual 2014-2015	Adopted 2015-2016	Proposed 2016-2017	Percent Change
"C" Roads						
"C" Road Fund	3,889,443	3,735,090	3,952,748	3,850,000	4,500,000	16.9%
Misc. Revenue	0	0	0	0	0	0.0%
Interest Revenue	0	10,174	10,797	0	0	0.0%
Gain on Sale of Assets	115,088	9,740	0	0	0	0.0%
Funding Other Sources	0	0	0	397,004	0	-100.0%
Subtotal	**4,004,531**	**3,755,004**	**3,963,545**	**4,247,004**	**4,500,000**	**6.0%**

WEST VALLEY CITY "C" ROADS - FUND 11
EXPENDITURE STATEMENT

	Actual 2012-2013	Actual 2013-2014	Actual 2014-2015	Adopted 2015-2016	Proposed 2016-2017	Percent Change
OPERATIONS:						
Equipment	31,654	25,093	22,723	28,000	28,000	0.0%
Gasoline, Diesel	1,130	220	474	3,000	1,000	-66.7%
Professional Svcs. (Intern)	300,000	446,564	446,564	460,004	460,000	0.0%
Professional Svcs. (Ext.)	34,594	45,408	33,689	135,000	45,000	-66.7%
Special Supplies	256,711	159,147	170,091	157,000	140,000	-10.8%
Crack Seal	471,941	442,120	477,819	515,000	490,000	-4.9%
Concrete &Salt	229,966	233,177	192,988	210,000	233,000	11.0%
Traffic Controls	0	0	192	0	0	0.0%
Capital Building	0	0	0	30,000	0	-100.0%
Captial Equipment	690,660	456,017	216,710	197,500	194,500	-1.5%
Debt Service Fleet	96,302	0	0	0	0	0.0%
Special Projects	219,113	4,734	1,728,782	1,706,000	2,103,000	23.3%
Subtotal Streets	**2,332,071**	**1,812,480**	**3,290,032**	**3,441,504**	**3,694,500**	**7.4%**
ENGINEERING:						
Professional Svcs. (Intern)	95,000	110,000	110,000	170,000	170,000	0.0%
Special Projects	2,146,176	1,386,440	90,015	300,000	300,000	0.0%
Subtotal Engineering	**2,241,176**	**1,496,440**	**200,015**	**470,000**	**470,000**	**0.0%**
TRANSPORTATION:						
Equipment	24	569	695	1,000	1,000	0.0%
Utilities	12,097	13,189	13,029	13,000	13,000	0.0%
Professional Svcs. (Int.)	20,000	20,000	11,500	11,500	11,500	0.0%
Professional Svcs. (Ext.)	168,496	178,114	203,448	200,000	200,000	0.0%
Signs	24,943	26,631	22,165	25,000	25,000	0.0%
Traffic Controls	31,371	27,135	27,831	35,000	35,000	0.0%
Special Projects	35,010	65,611	27,602	50,000	50,000	0.0%
Subtotal Transportation	**291,941**	**331,249**	**306,270**	**335,500**	**335,500**	**0.0%**
Total Expenditures	**4,865,188**	**3,640,169**	**3,796,317**	**4,247,004**	**4,500,000**	**6.0%**

WEST VALLEY CITY FITNESS CENTER - FUND 21
REVENUE STATEMENT

	Actual 2012-2013	Actual 2013-2014	Actual 2014-2015	Adopted 2015-2016	Proposed 2016-2017	Percent Change
FITNESS CENTER:						
Facility Drop-In Fees	287,528	260,476	252,786	260,000	275,000	5.8%
Annual Passes	1,166,513	1,163,484	1,209,157	1,268,000	1,275,000	0.6%
Activity Area	60,589	72,807	77,272	125,000	95,000	-24.0%
Community Rooms	7,357	(3,637)	32,860	25,000	33,000	32.0%
Children's Area	249,287	294,296	330,062	345,000	375,000	8.7%
Aquatics	80,746	82,236	109,254	92,000	115,000	25.0%
Pro Shop	18,876	4,099	4,959	8,000	6,000	-25.0%
Snack Bar	91,318	92,046	94,151	95,000	97,000	2.1%
Sports Programs	114,709	119,727	107,683	125,000	118,000	-5.6%
Catering	7,137	3,759	932	5,000	1,000	-80.0%
Miscellaneous Rev.	62,893	45,782	26,586	30,000	24,000	-20.0%
Total Fitness Center	**2,146,953**	**2,135,075**	**2,245,702**	**2,378,000**	**2,414,000**	**1.5%**

WEST VALLEY CITY FITNESS CENTER - FUND 21
EXPENDITURE STATEMENT

	Actual 2012-2013	Actual 2013-2014	Actual 2014-2015	Adopted 2015-2016	Proposed 2016-2017	Percent Change
FITNESS CENTER:						
Transfers In GF/						
Property Tax	(1,838,090)	(2,431,343)	(2,097,033)	(2,097,033)	(1,302,612)	-37.9%
Added Operating Infusion	(369,824)	(39,362)	(401,732)	(246,712)	0	-100.0%
Community Serv. Fd Contribution	0	0	0	0	(596,570)	100.0%
Permanent Employees	726,835	737,464	784,936	757,151	788,424	4.1%
O.T. Employees	7,640	5,117	5,387	7,500	6,500	-13.3%
Temporary Employees	734,651	712,347	708,668	822,349	775,958	-5.6%
Additional Pay	16,210	9,833	10,920	21,000	16,200	-22.9%
Employee Benefits	329,331	355,618	381,904	374,371	445,020	18.9%
Uniform Allowance	0	135	320	500	500	0.0%
Books & Dues	15	598	658	1,300	1,300	0.0%
Advertising	20,395	14,859	24,343	30,000	30,000	0.0%
Travel & Training	5,002	8,567	12,608	16,000	21,000	31.3%
Office Supplies	42,546	41,343	50,958	44,016	51,000	15.9%
Snack Bar	72,053	71,613	67,381	72,000	72,000	0.0%
Equipment Maint.	203,342	225,737	188,797	175,000	193,000	10.3%
Gasoline & Diesel	3,098	3,875	2,898	4,600	3,000	-34.8%
Software	4,999	4,999	9,998	5,000	5,000	0.0%
Building/Grounds	68,467	45,760	54,261	66,000	51,000	-22.7%
Utilities	334,837	332,655	339,476	321,000	330,000	2.8%
Telephone	11,670	11,010	11,210	10,508	11,495	9.4%
Professional Services	90,955	80,911	88,758	95,300	105,000	10.2%
General Health	2,716	3,729	2,605	3,000	4,000	33.3%
Special Supplies	18,654	22,159	23,225	25,000	28,000	12.0%
Children's Programs	83,443	54,076	66,671	67,000	70,000	4.5%
Adult Programs	37,354	30,084	41,182	38,500	40,000	3.9%
Aquatics	16,451	10,463	43,873	26,000	28,000	7.7%
Insurance	32,396	46,487	46,896	46,900	48,000	2.3%
Capital Equipment	16,200	66,098	82,753	85,000	100,000	17.6%
Capital Allocation	0	0	0	0	596,570	100.0%
Trustee Fees (Transfer to GL)	5,200	5,200	5,200	5,200	5,200	0.0%
Capital Res.(Transfer to BA)	30,000	30,000	30,000	30,000	30,000	0.0%
Debt Service (Transfer to GL)	1,480,426	1,599,537	1,601,950	1,601,550	1,604,150	0.2%
RDA SARR for Debit Service	0	0	0	0	(1,117,135)	100.0%
Transfer for Police Substation	(20,000)	(25,000)	(30,000)	(30,000)	(30,000)	0.0%
Total Fitness Center	**2,166,972**	**2,034,569**	**2,159,071**	**2,378,000**	**2,414,000**	**1.5%**

WEST VALLEY CITY HALE CENTRE THEATRE - FUND 23

REVENUE STATEMENT

	Actual 2012-2013	Actual 2013-2014	Actual 2014-2015	Adopted 2015-2016	Proposed 2016-2017	Percent Change
HALE CENTRE THEATRE:						
Rent	497,081	499,144	495,309	550,700	533,152	-3.2%
Capitalized Interest	1,600	1,566	1,887	0	0	0.0%
Total Hale Centre Theatre	**498,681**	**500,710**	**497,196**	**550,700**	**533,152**	**-3.2%**

WEST VALLEY CITY HALE CENTRE THEATRE - FUND 23

EXPENDITURE STATEMENT

	Actual 2012-2013	Actual 2013-2014	Actual 2014-2015	Adopted 2015-2016	Proposed 2016-2017	Percent Change
HALE CENTRE THEATRE:						
Building & Grounds	15,895	18,221	13,392	19,188	19,188	0.0%
Debt Serv (BA)	486,627	508,369	504,918	550,700	533,152	-3.2%
Cap Res (BA)	50,000	50,000	50,000	50,000	50,000	0.0%
Gen.Fund Transfer In	(69,188)	(69,188)	(69,188)	(69,188)	(69,188)	0.0%
Total Hale Centre Theatre	**483,334**	**507,402**	**499,122**	**550,700**	**533,152**	**-3.2%**

WEST VALLEY CITY ARENA - FUND 25

REVENUE STATEMENT

	Actual 2012-2013	Actual 2013-2014	Actual 2014-2015	Adopted 2015-2016	Proposed 2016-2017	Percent Change
ARENA REVENUES	**2,759,520**	**2,881,893**	**3,703,199**	**3,490,698**	**3,598,232**	**3.1%**

WEST VALLEY CITY ARENA - FUND 25

EXPENDITURE STATEMENT

	Actual 2012-2013	Actual 2013-2014	Actual 2014-2015	Adopted 2015-2016	Proposed 2016-2017	Percent Change
ARENA:						
Operations	3,649,657	3,419,397	4,102,932	4,005,879	4,248,232	6.0%
Transfers Out	2,896,239	2,889,605	2,839,596	2,983,915	2,848,422	-4.5%
Transfers In	(2,885,777)	(2,885,308)	(3,305,721)	(3,499,096)	(3,498,422)	0.0%
Total Arena	**3,660,119**	**3,423,694**	**3,636,807**	**3,490,698**	**3,598,232**	**3.1%**

SANITATION - FUND 27
REVENUE STATEMENT

	Actual 2012-2013	Actual 2013-2014	Actual 2014-2015	Adopted 2015-2016	Proposed 2016-2017	Percent Change
SANITATION:						
Garbage Fees	4,371,600	4,547,453	4,942,580	5,100,000	5,100,000	0.0%
Interest	6,801	23,505	33,283	0	0	0.0%
Funding Other Source	0	0	0	0	83,588	100.0%
Total	**4,378,401**	**4,570,958**	**4,975,863**	**5,100,000**	**5,183,588**	**1.6%**

SANITATION - FUND 27
EXPENDITURE STATEMENT

	Actual 2012-2013	Actual 2013-2014	Actual 2014-2015	Adopted 2015-2016	Proposed 2016-2017	Percent Change
SANITATION:						
Permanent Employees	119,427	128,766	143,304	78,882	114,242	44.8%
O.T. Employees	1,847	853	362	2,000	1,000	-50.0%
Temporary Employees	0	6,555	0	6,000	6,000	0.0%
Employee Benefits	50,290	54,488	61,041	37,954	59,282	56.2%
Books/Subscriptions	200	0	205	250	250	0.0%
Advertising	0	109	0	1,000	0	-100.0%
Travel & Training	0	1,453	1,593	2,000	2,500	25.0%
Office Supplies	2,841	5,227	7,853	6,000	9,000	50.0%
Gasoline & Diesel	8,537	9,185	7,900	9,000	7,000	-22.2%
Auto Parts	0	0	8,929	3,000	3,000	0.0%
Prof. Services Internal	603,977	625,081	610,273	732,487	742,131	1.3%
Prof. Services External	2,458,649	2,517,561	2,436,837	2,728,346	2,759,783	1.2%
Landfill Fees	1,054,783	1,168,362	1,298,753	1,275,000	1,316,250	3.2%
Special Supplies	98,605	159,463	106,201	150,000	150,000	0.0%
Capital Equipment	0	0	77,801	0	0	0.0%
Capital Building	0	0	100,050	15,000	0	-100.0%
Capital Allocation	0	0	0	39,931	0	-100.0%
Transfer Out-General Fund	6,500	6,500	0	0	0	0.0%
Transfer In	0	0	(6,329)	0	0	0.0%
Debt Service	155,325	168,282	169,276	0	0	0.0%
Clean & Beautiful Expenses	8,119	8,140	12,710	13,150	13,150	0.0%
Total	**4,569,100**	**4,860,025**	**5,036,759**	**5,100,000**	**5,183,588**	**1.6%**

WEST VALLEY CITY ROAD IMPACT FEES - FUND 31
REVENUE STATEMENT

	Actual 2012-2013	Actual 2013-2014	Actual 2014-2015	Adopted 2015-2016	Proposed 2016-2017	Percent Change
Road Impact Fees	470,410	906,115	501,947	270,000	350,000	29.6%
Funding Other Sources	0	0	0	1,387,000	0	-100.0%
Total	**470,410**	**906,115**	**501,947**	**1,657,000**	**350,000**	**-78.9%**

WEST VALLEY CITY ROAD IMPACT FEES - FUND 31
EXPENDITURE STATEMENT

	Actual 2012-2013	Actual 2013-2014	Actual 2014-2015	Adopted 2015-2016	Proposed 2016-2017	Percent Change
Professional Services	60,000	45,000	45,000	60,000	60,000	0.0%
Road Projects	258,884	4,854	239,737	1,500,000	200,000	-86.7%
Impact Fee Reimbursements	97,000	97,000	97,000	97,000	90,000	-7.2%
Total Expenditures	**415,884**	**146,854**	**381,737**	**1,657,000**	**350,000**	**-78.9%**

WEST VALLEY CITY PARK IMPACT FEES - FUND 32
REVENUE STATEMENT

	Actual 2012-2013	Actual 2013-2014	Actual 2014-2015	Adopted 2015-2016	Proposed 2016-2017	Percent Change
Park Impact Fees	431,587	1,076,525	556,527	300,000	300,000	0.0%
Total Revenue	**431,587**	**1,076,525**	**556,527**	**300,000**	**300,000**	**0.0%**

WEST VALLEY CITY PARK IMPACT FEES - FUND 32
EXPENDITURE STATEMENT

	Actual 2012-2013	Actual 2013-2014	Actual 2014-2015	Adopted 2015-2016	Proposed 2016-2017	Percent Change
Park Impact Expenses	504,959	517,192	1,043,870	300,000	300,000	0.0%
Total Expenditures	**504,959**	**517,192**	**1,043,870**	**300,000**	**300,000**	**0.0%**

WEST VALLEY CITY FIRE IMPACT FEES - FUND 33
REVENUE STATEMENT

	Actual 2012-2013	Actual 2013-2014	Actual 2014-2015	Adopted 2015-2016	Proposed 2016-2017	Percent Change
Fire Impact Fees	49,861	107,678	54,405	40,000	40,000	0.0%
Total Revenue	**49,861**	**107,678**	**54,405**	**40,000**	**40,000**	**0.0%**

WEST VALLEY CITY FIRE IMPACT FEES - FUND 33
EXPENDITURE STATEMENT

	Actual 2012-2013	Actual 2013-2014	Actual 2014-2015	Adopted 2015-2016	Proposed 2016-2017	Percent Change
Fire Station 74 Debt Transfer (GF)	28,000	40,000	40,000	40,000	40,000	0.0%
Total Expenditures	**28,000**	**40,000**	**40,000**	**40,000**	**40,000**	**0.0%**

WEST VALLEY CITY POLICE IMPACT FEES - FUND 34
REVENUE STATEMENT

	Actual 2012-2013	Actual 2013-2014	Actual 2014-2015	Adopted 2015-2016	Proposed 2016-2017	Percent Change
Police Impact Fees	32,962	77,949	47,196	30,000	30,000	0.0%
Total Revenue	**32,962**	**77,949**	**47,196**	**30,000**	**30,000**	**0.0%**

WEST VALLEY CITY POLICE IMPACT FEES - FUND 34
EXPENDITURE STATEMENT

	Actual 2012-2013	Actual 2013-2014	Actual 2014-2015	Adopted 2015-2016	Proposed 2016-2017	Percent Change
Police Subs. Debt Transfer to FFC	20,000	25,000	30,000	30,000	30,000	0.0%
Total Expenditures	**20,000**	**25,000**	**30,000**	**30,000**	**30,000**	**0.0%**

WEST VALLEY CITY FLOOD IMPACT FEES - FUND 35
REVENUE STATEMENT

	Actual 2012-2013	Actual 2013-2014	Actual 2014-2015	Adopted 2015-2016	Proposed 2016-2017	Percent Change
FLOOD IMPACT FEES:						
Redwood District	2,908	0	0	0	0	0.0%
Decker District	5,063	9,470	2,227	0	0	0.0%
Jordan District	710	971	0	0	0	0.0%
Brighton District	0	0	229	0	0	0.0%
Riter District	70,030	79,590	92,325	70,000	30,000	-57.1%
Oquirrh Shadows	0	8,778	0	0	0	0.0%
Lake Park	2,520	10,794	0	0	0	0.0%
Canal District	0	486	1,624	0	0	0.0%
West Ridge Distict	9,370	0	4,707	0	0	0.0%
Funding Other Sources	0	0	0	144,000	0	-100.0%
Total Revenue	**90,601**	**110,088**	**101,112**	**214,000**	**30,000**	**-86.0%**

WEST VALLEY CITY FLOOD IMPACT FEES - FUND 35
EXPENDITURE STATEMENT

	Actual 2012-2013	Actual 2013-2014	Actual 2014-2015	Adopted 2015-2016	Proposed 2016-2017	Percent Change
Special Projects	2,864	0	0	0	0	0.0%
Redwood	3,891	4,121	0	0	0	0.0%
Decker	0	14,490	0	0	0	0.0%
Jordan District	0	0	971	0	0	0.0%
Riter District	0	125,000	120,827	214,000	30,000	-86.0%
West Ridge District	0	42,277	0	0	0	0.0%
Transfer In	0	(117,628)	0	0	0	0.0%
Total Expenditure	**6,755**	**68,260**	**121,798**	**214,000**	**30,000**	**-86.0%**

WEST VALLEY CITY STORM WATER UTILITY - FUND 36

REVENUE STATEMENT

	Actual 2012-2013	Actual 2013-2014	Actual 2014-2015	Adopted 2015-2016	Proposed 2016-2017	Percent Change
STORM WATER UTILITY:						
Storm Water Utility Fees	3,710,099	4,004,798	4,052,509	3,750,000	3,800,000	1.3%
Interest Income	86,661	187,602	190,553	0	0	0.0%
Land Sales	0	0	100	0	0	0.0%
Gain on Sale of Assets	0	287,498	404,023	0	0	0.0%
Miscellaneous Revenue	4	0	0	0	0	0.0%
Revnue Other Sources (Fund Bal.)	0	0	0	1,512,403	2,050,000	35.5%
Total Revenue	**3,796,764**	**4,479,898**	**4,647,185**	**5,262,403**	**5,850,000**	**11.2%**

WEST VALLEY CITY STORM WATER UTILITY - FUND 36

EXPENDITURE STATEMENT

	Actual 2012-2013	Actual 2013-2014	Actual 2014-2015	Adopted 2015-2016	Proposed 2016-2017	Percent Change
OPERATIONS:						
Books/Dues	157	161	161	170	0	-100.0%
Travel & Training	1,985	1,612	1,738	5,000	5,000	0.0%
Office Supplies	1,649	1,374	3,658	2,400	2,400	0.0%
Equip Maintenance	36,298	54,483	50,948	50,000	100,000	100.0%
Fuel	60,848	62,459	61,020	60,000	50,000	-16.7%
Auto Maintenance	65,000	65,000	65,000	65,000	55,000	-15.4%
Vehicle Parts	51,754	73,228	109,713	75,000	75,000	0.0%
Utilities	17,425	18,258	24,897	20,000	30,000	50.0%
Prof./Tech (internal)	541,164	541,164	541,164	554,604	554,604	0.0%
Prof./Tech. (external)	80,476	60,455	60,060	158,320	54,000	-65.9%
Gen. Health	138	0	0	0	0	0.0%
Special Supplies	65,855	75,169	103,340	70,000	70,000	0.0%
Insurance	9,544	8,691	2,869	10,000	10,000	0.0%
Capital Building	0	0	0	30,000	0	-100.0%
Capital Equipment	150,938	2,125	(10,957)	165,000	293,750	78.0%
Depreciation	0	1,271,117	1,317,794	1,470,000	1,470,000	0.0%
Subtotal	1,083,231	2,235,295	2,331,405	2,735,494	2,769,754	**1.3%**
ENGINEERING:						
Books/Dues	0	161	201	200	0	-100.0%
Travel & Training	205	704	3,828	2,000	4,000	100.0%
Office Supplies	4,415	13,820	4,243	3,000	3,000	0.0%
Equip. Maintenance	2,066	6,344	8,264	6,500	15,000	130.8%
Fuel	9,277	4,304	3,793	5,000	5,000	0.0%
Software	12,535	15,202	16,422	6,600	6,600	0.0%
Building/Grounds	0	6,335	0	0	0	0.0%
Prof/Tech (internal)	508,000	508,000	508,000	508,000	508,000	0.0%
Prof./Tech. (external)	9,219	9,647	12,626	10,000	13,000	30.0%
Special Supplies	4,085	5,314	4,190	3,000	3,000	0.0%
Special Projects	519,897	4,106,330	1,025,061	810,000	1,350,000	66.7%
Capitalized Spec Proj	0	(4,106,330)	(894,338)	0	0	0.0%
Debt Service	0	16,888	20,325	313,232	313,302	0.0%
Subtotal	1,069,699	586,718	712,615	1,667,532	2,220,902	**33.2%**
ADMINISTRATION:						
Permanent Employees	8,911	0	0	0	0	0.0%
Employee Benefits	5,765	0	0	0	0	0.0%
Public Notices	19,154	14,673	12,592	12,000	12,000	0.0%
Travel & Training	2,179	1,442	1,051	1,500	2,000	33.3%
Office Supplies	3,906	2,931	9,276	6,000	6,000	0.0%
Fuel	0	0	0	0	0	0.0%
Prof/Tech (internal)	532,490	524,094	509,286	572,499	606,344	5.9%
Prof./Tech. (external)	143,277	196,518	245,773	252,378	233,000	-7.7%
Capital Building	0	0	0	15,000	0	-100.0%
Transfer Out	0	117,628	0	0	0	0.0%
Subtotal	715,682	857,285	777,978	859,377	859,344	0.0%
Total Expenditure	**2,868,612**	**3,679,298**	**3,821,998**	**5,262,403**	**5,850,000**	**11.2%**

THE DIVISION OF ARTS AND CULTURE - FUND 37
REVENUE STATEMENT

	Actual 2012-2013	Actual 2013-2014	Actual 2014-2015	Adopted 2015-2016	Proposed 2016-2017	Percent Change
Cultural Center:						
Miscellaneous	0	25	126	0	0	0.0%
Cultural Center Revenue	158,450	167,266	143,027	150,000	150,000	0.0%
Amphitheater	2,439	0	0	0	0	0.0%
Concessions Revenue	14,167	8,349	0	0	0	0.0%
Donations/Endow/Grants	326,332	155,068	3,000	250,000	250,000	0.0%
Membership/Season Tickets	16,079	7,831	0	0	0	0.0%
Total Revenue	**517,467**	**338,540**	**146,153**	**400,000**	**400,000**	**0.0%**

THE DIVISION OF ARTS AND CULTURE - FUND 37
EXPENDITURE STATEMENT

	Actual 2012-2013	Actual 2013-2014	Actual 2014-2015	Adopted 2015-2016	Proposed 2016-2017	Percent Change
Operations:						
Permanent Employees	414,518	581,287	634,430	635,507	587,163	-7.6%
Overtime	569	0	3,688	5,000	5,000	0.0%
Temporary Employees	31,121	30,543	27,206	30,163	31,326	3.9%
Employee Benefits	129,658	178,096	200,788	204,760	215,048	5.0%
Books & Dues	560	74	0	3,000	2,500	-16.7%
Advertising	0	0	0	2,500	2,500	0.0%
Travel & Training	1,182	76	960	3,000	2,500	-16.7%
Office Supplies	12,112	10,197	9,629	25,454	12,654	-50.3%
Equip. Maintenance	14,532	11,804	15,500	15,000	15,000	0.0%
Gasoline	737	896	2,188	2,700	2,200	-18.5%
Auto Maintenance	0	0	0	2,300	1,800	-21.7%
Auto Parts	231	2,800	743	1,800	1,800	0.0%
Software	0	0	0	5,500	500	-90.9%
Building & Grounds	16,195	13,638	10,702	26,781	26,781	0.0%
Utilities	121,109	122,763	137,900	133,000	133,000	0.0%
Telephone	15,103	12,232	12,232	9,520	9,220	-3.2%
Contigency	70,624	42,088	28,999	50,000	50,000	0.0%
Professional Services	2,529	2,616	1,538	5,800	3,000	-48.3%
General Health	71	105	0	250	250	0.0%
Special Supplies	36,486	63,711	43,872	72,942	71,542	-1.9%
Signs	0	0	0	2,500	2,500	0.0%
Insurance	20,878	0	0	1,900	1,200	-36.8%
Sold Services	0	(63,179)	(94,391)	(697,000)	0	-100.0%
Special Projects	52,418	6,552	1,517	550,000	0	-100.0%
ZAP Activities	43,049	47,007	81,722	(3,000)	0	-100.0%
Grant/Donation Funded Activities	0	0	0	122,000	0	-100.0%
Cultural Arts Board (CAB)	37,524	25,021	32,076	44,398	44,398	0.0%
Sister City	2,438	0	149	0	0	0.0%
WorldStage Concerts	0	600	9,400	0	0	0.0%
Events	0	8,324	5,150	10,000	10,000	0.0%
Transfer In From GF	(538,855)	(800,507)	(1,024,438)	(909,425)	(875,532)	-3.7%
Subtotal Operations	**484,789**	**296,741**	**141,560**	**356,350**	**356,350**	**0.0%**
Maintenance:						
Equiment Maintenance	17,688	18,902	16,421	16,450	16,450	0.0%
Gasoline	984	466	1,200	1,200	1,200	0.0%
Building & Grounds	25,528	25,990	25,770	26,000	26,000	0.0%
Subtotal Maintenance	**44,200**	**45,358**	**43,391**	**43,650**	**43,650**	**0.0%**
Total Expenditures	**528,989**	**342,099**	**184,951**	**400,000**	**400,000**	**0.0%**

ARTS FOUNDATION - FUND 38
REVENUE STATEMENT

	Actual 2012-2013	Actual 2013-2014	Actual 2014-2015	Adopted 2015-2016	Proposed 2016-2017	Percent Change
Arts Foundation:						
Grants	0	0	0	30,000	30,000	0.0%
Donations/Contributions	0	0	1,644	16,000	16,000	0.0%
Restricted Purpose Donations	0	0	13,282	0	0	0.0%
In-Kind Contributions	0	0	0	108,000	108,000	0.0%
Capital Projects Grants/Contributions	0	0	0	500,000	500,000	0.0%
Event Income	0	0	0	50,000	50,000	0.0%
Interest Income	0	0	0	1,000	1,000	0.0%
Total Revenue	**0**	**0**	**14,926**	**705,000**	**705,000**	**0.0%**

ARTS FOUNDATION - FUND 38
EXPENDITURE STATEMENT

	Actual 2012-2013	Actual 2013-2014	Actual 2014-2015	Adopted 2015-2016	Proposed 2016-2017	Percent Change
Operations:						
Memberships/Dues/Subscriptions	0	0	0	500	500	0.0%
Travel/Training	0	0	0	500	500	0.0%
Supplies	0	0	172	12,800	12,800	0.0%
Vehicle Gasoline	0	0	0	500	500	0.0%
Vehicle Maintenance	0	0	0	500	500	0.0%
Software	0	0	0	5,000	5,000	0.0%
Office Space Rent	0	0	0	8,000	8,000	0.0%
Telephone	0	0	0	300	300	0.0%
Professional/Technical	0	0	0	2,800	2,800	0.0%
Special Supplies	0	0	0	1,400	1,400	0.0%
Insurance	0	0	0	700	700	0.0%
Special Projects	0	0	0	550,000	550,000	0.0%
UCCC Events	0	0	4,054	122,000	122,000	0.0%
Transfer Out	0	0	13,188	0	0	0.0%
Total Expenditures	**0**	**0**	**17,414**	**705,000**	**705,000**	**0.0%**

CAPITAL IMPROVEMENTS FUND - FUND 45
REVENUE STATEMENT

	Actual 2012-2013	Actual 2013-2014	Actual 2014-2015	Adopted 2015-2016	Proposed 2016-2017	Percent Change
REVENUES:						
Miscellaneous	75,677	80,190	79,402	0	0	0.0%
Fed/State Capital Projects	3,543,000	4,435,561	0	0	0	0.0%
Rolling Stock Interest	1,738	140	0	0	0	0.0%
Interest - Restricted Projects	0	13,893	0	0	0	0.0%
Gain on Sale of Asset	104,013	115,785	322,102	0	0	0.0%
Total Revenues	**3,724,428**	**4,645,569**	**401,504**	**0**	**0**	**0.0%**
Other Sources	**0**	**1,430,639**	**0**	**1,003,000**	**0**	**-100.0%**
Total Revenue and Other Sources	**3,724,428**	**6,076,208**	**401,504**	**1,003,000**	**0**	**-100.0%**

CAPITAL IMPROVEMENTS FUND - FUND 45
EXPENDITURE STATEMENT

	Actual 2012-2013	Actual 2013-2014	Actual 2014-2015	Adopted 2015-2016	Proposed 2016-2017	Percent Change
EXPENDITURES:						
Rolling Stock Lease Payments	422,995	413,906	481,688	392,275	326,822	-16.7%
Sold Services	(99,550)	(26,706)	(4,122,907)	0	0	0.0%
Special Projects	216,646	77,462	15,845	320,000	0	-100.0%
Facilities Projects	162,689	41,304	393,170	343,000	0	-100.0%
Chinese Gate	98,982	0	0	0	0	0.0%
Maverik Center Parking Lot	0	327,942	0	0	0	0.0%
City Hall Roof Repairs	28,241	29,566	0	0	0	0.0%
Remodel Fire Station #73	8,634	280,319	0	0	0	0.0%
City Hall Lobby 2nd Floor	0	22,501	0	0	0	0.0%
City Center Plaza	6,930	25,150	0	0	0	0.0%
City Center Promenade	471,003	0	0	0	0	0.0%
Faribourne Station	859,503	525,287	73,230	0	0	0.0%
6400 W Extention	246,817	1,083,652	2,124,631	0	0	0.0%
6200 S Extention	0	4,501	178,621	0	0	0.0%
SR-201 Frontage Rd at Bangeter	334,714	1,068,702	63,435	0	0	0.0%
SR-201 Frontage Rd at 7200 W	4,447	913,021	0	0	0	0.0%
Jordan River Pedestrian Bridge	7,870	588,655	0	0	0	0.0%
2400 S 4800 W Extention	0	351,440	1,878,242	0	0	0.0%
5600 W Widening	0	0	202,460	0	0	0.0%
Historic Granary Relocation	0	11,900	0	0	0	0.0%
UCCC Basement Buildout	0	0	8,935	0	0	0.0%
HAWK Crosswalk	0	0	45,944	0	0	0.0%
Sidewalk Projects	0	0	962	0	0	0.0%
Shop Expansion	0	0	258,892	0	0	0.0%
Skate Park	0	0	4,155	0	0	0.0%
Admin Special Projects	0	118,875	0	75,000	0	-100.0%
Finance Special Projects	0	0	0	150,000	0	-100.0%
CED Special Projects	0	0	8,000	0	0	0.0%
Police Special Projects	0	0	9,475	35,000	0	-100.0%
Fire Spceial Porjects	0	0	367,443	80,000	0	-100.0%
Public Works Special Projects	0	0	0	0	0	0.0%
Parks Special Projects	0	189,940	23,117	0	0	0.0%
Rolling Stock	1,053,875	1,981,574	1,361,210	1,000,000	0	-100.0%
Transfers Out	607,414	26,500	0	0	0	0.0%
Transfers In	(1,635,273)	(1,542,400)	(1,094,814)	(1,392,275)	(326,822)	-76.5%
Total Expenditures	**2,795,937**	**6,513,091**	**2,281,734**	**1,003,000**	**0**	**-100.0%**

THE RIDGE GOLF CLUB FUND - FUND 55
REVENUE STATEMENT

	Actual 2012-2013	Actual 2013-2014	Actual 2014-2015	Adopted 2015-2016	Proposed 2016-2017	Percent Change
OPERATING REVENUE:						
Green Fees	14,371	726,482	696,708	460,000	460,000	0.0%
Member Programs	0	0	0	80,000	85,000	6.3%
Carts	4,440	313,818	300,659	285,000	295,000	3.5%
Driving Range	561	27,598	27,932	30,000	35,000	16.7%
Grill/Catering	3,750	323,201	298,975	340,000	340,000	0.0%
Pro Shop	1,970	87,065	102,472	115,000	120,000	4.3%
Pull Carts	0	369	536	500	500	0.0%
Rental Clubs	0	1,614	2,139	2,500	2,500	0.0%
Used Balls	0	0	0	2,000	2,000	0.0%
Facility Rental	0	0	0	40,000	40,000	0.0%
Group Tournament	0	0	0	225,000	245,000	8.9%
Gratuities	0	0	0	45,000	45,000	0.0%
Miscellaneous	1,000	0	0	5,000	5,000	0.0%
Research & Demonstration	0	3,300	800	0	0	0.0%
Interest Income	33,832	8,957	0	0	0	0.0%
Gain on Sale of Assets	1,581	1,604	0	0	0	0.0%
Funding Other Sources	0	0	0	398,630	398,930	0.1%
Total Revenue	**61,505**	**1,494,008**	**1,430,221**	**2,028,630**	**2,073,930**	**2.2%**

THE RIDGE GOLF CLUB FUND - FUND 55
EXPENSE STATEMENT

	Actual 2012-2013	Actual 2013-2014	Actual 2014-2015	Adopted 2015-2016	Proposed 2016-2017	Percent Change
OPERATING EXPENSES						
OPERATIONS:						
Personnel	205,730	314,235	336,898	301,455	317,226	5.2%
Operations	67,488	71,605	73,406	76,850	73,000	-5.0%
Professional Services	894	36,445	48,622	29,405	29,405	0.0%
Utilities	14,104	31,516	26,537	36,000	36,000	0.0%
Operations Subtotal	**288,216**	**453,801**	**485,463**	**443,710**	**455,631**	**2.7%**
MAINTENANCE:						
Personnel	304,969	309,925	338,959	347,637	366,947	5.6%
Operating Supplies	366,441	219,988	208,284	168,441	168,441	0.0%
Utilities	112,134	116,378	101,902	178,885	178,885	0.0%
Maintenance Subtotal	**783,544**	**646,291**	**649,145**	**694,963**	**714,273**	**2.8%**
GRILL/CATERING						
Personnel	102,547	188,863	213,184	250,117	246,506	-1.4%
Operating Supplies	15,863	25,787	24,481	32,840	41,940	27.7%
Snack Bar Subtotal	**118,410**	**214,650**	**237,665**	**282,957**	**288,446**	**1.9%**
COST OF SALES:						
Cost of Goods Sold	1,187	57,779	72,589	75,000	70,000	-6.7%
Grill/Snack Bar	11,309	123,464	102,327	135,000	135,000	0.0%
Depreciation	138,358	435,427	418,040	397,000	410,580	3.4%
Cost of Sales Subtotal	**150,854**	**616,670**	**592,956**	**607,000**	**615,580**	**1.4%**
Total Operating Expenses	**1,341,024**	**1,931,412**	**1,965,229**	**2,028,630**	**2,073,930**	**2.2%**
NON-OPERATING EXPENSES:						
Transfer In (Gen.Fund)	0	(38,388)	(8,599)	0	0	0.0%
Transfer Out	1,705,170	1,647	0	0	0	0.0%
Debt-Retirement (Gen. Fund)	0	0	0	0	0	0.0%
Total Non-Operating Expenses	**1,705,170**	**(36,741)**	**(8,599)**	**0**	**0**	**0.0%**
Total Expenses	**3,046,194**	**1,894,671**	**1,956,630**	**2,028,630**	**2,073,930**	**2.2%**

STONEBRIDGE GOLF COURSE FUND - FUND 57

REVENUE STATEMENT

	Actual 2012-2013	Actual 2013-2014	Actual 2014-2015	Adopted 2015-2016	Proposed 2016-2017	Percent Change
OPERATING REVENUE:						
Green Fees	838,939	763,886	794,294	489,000	495,000	1.2%
Member Programs	0	0	0	90,000	100,000	11.1%
Carts	296,972	289,803	332,927	228,500	238,500	4.4%
Driving Range	18,732	17,589	17,657	17,400	19,400	11.5%
Grill/Catering	577,697	515,371	545,434	440,000	455,000	3.4%
Pro Shop	197,035	190,050	223,539	168,000	175,000	4.2%
Pull Carts	699	661	650	500	500	0.0%
Rental Clubs	8,209	7,180	9,112	6,700	6,700	0.0%
Used Balls	0	0	0	5,000	7,000	40.0%
Facility Rental	0	0	0	40,000	55,000	37.5%
Group Tournament	0	0	0	285,000	295,000	3.5%
Gratuities	0	0	0	55,000	55,000	0.0%
Misc.	252	5,000	0	5,000	10,000	100.0%
Total Op. Revenue	**1,938,535**	**1,789,540**	**1,923,613**	**1,830,100**	**1,912,100**	**4.5%**
NON-OPERATING REVENUE:						
Int. Earnings (Res. Fund)	686	0	0	0	0	0.0%
Gain on Sale of Assets	7,533	18,095	66,757	0	43,600	100.0%
Funding Other Sources	0	0	0	0	226,740	100.0%
Total Non-Operating Rev	**8,219**	**18,095**	**66,757**	**0**	**270,340**	**100.0%**
Total Revenue	**1,946,754**	**1,807,635**	**1,990,370**	**1,830,100**	**2,182,440**	**19.3%**

STONEBRIDGE GOLF COURSE FUND - FUND 57

EXPENSE STATEMENT

	Actual 2012-2013	Actual 2013-2014	Actual 2014-2015	Adopted 2015-2016	Proposed 2016-2017	Percent Change
OPERATING EXPENSES						
OPERATIONS:						
Personnel	275,802	308,683	332,792	343,538	363,875	5.9%
Operations	65,873	74,971	140,226	102,060	182,360	78.7%
Professional Services	44,086	45,190	50,542	34,000	34,000	0.0%
Utilities	44,488	42,798	47,656	37,000	37,000	0.0%
Operations Subtotal	**430,249**	**471,642**	**571,216**	**516,598**	**617,235**	**19.5%**
MAINTENANCE:						
Personnel	344,321	354,635	376,903	382,463	409,534	7.1%
Operating Supplies	202,015	194,227	200,158	208,676	208,676	0.0%
Utilities	135,682	126,099	140,482	178,215	178,215	0.0%
Maintenance Subtotal	**682,018**	**674,961**	**717,543**	**769,354**	**796,425**	**3.5%**
GRILL/CATERING:						
Personnel	219,889	242,305	271,125	262,092	285,740	9.0%
Operating Supplies	42,219	37,235	40,105	39,400	44,400	12.7%
Snack Bar Subtotal	**262,108**	**279,540**	**311,230**	**301,492**	**330,140**	**9.5%**
COST OF SALES:						
Cost of Goods Sold	129,047	127,741	155,833	120,000	120,000	0.0%
Grill/Snack Bar	179,937	162,225	178,439	180,000	180,000	0.0%
Depreciation	130,246	133,830	226,737	227,000	226,740	-0.1%
Cost of Sales Subtotal	**439,230**	**423,796**	**561,009**	**527,000**	**526,740**	**0.0%**
Total Oper Expenses	**1,813,605**	**1,849,939**	**2,160,998**	**2,114,444**	**2,270,540**	**7.4%**
NON-OPERATING EXPENSES:						
Equipment Lease	0	0	352,218	107,078	107,078	0.0%
Fund Transfer (GF)	(1,598,801)	(1,395,439)	(358,249)	(1,540,955)	(1,346,080)	-12.6%
Debt-Retire Bond	411,537	380,382	0	1,149,533	1,150,902	0.1%
Total Non-Operating Expenses	**(1,187,264)**	**(1,015,057)**	**(6,031)**	**(284,344)**	**(88,100)**	**-69.0%**
Total Expenses	**626,341**	**834,882**	**2,154,967**	**1,830,100**	**2,182,440**	**19.3%**

GRANTS - FUND 60
REVENUE STATEMENT

	Actual 2012-2013	Actual 2013-2014	Actual 2014-2015	Adopted 2015-2016	Proposed 2016-2017	Percent Change
CDBG Projects	852,754	868,118	1,073,977	1,100,000	1,300,000	18.2%
HOME & Federal Grants	1,532,756	679,598	662,893	300,000	300,000	0.0%
PSN Grants	88,772	154,787	117,743	0	0	0.0%
State Grants	0	159,641	4,630,121	0	0	0.0%
Other Governmental Agencies	0	63,179	64,000	0	0	0.0%
Subtotal	**2,474,282**	**1,925,323**	**6,548,734**	**1,400,000**	**1,600,000**	**14.3%**

GRANTS - FUND 60
EXPENDITURE STATEMENT

	Actual 2012-2013	Actual 2013-2014	Actual 2014-2015	Adopted 2015-2016	Proposed 2016-2017	Percent Change
Personnel	240,447	248,487	211,533	157,985	125,344	-20.7%
General Operations	(53,276)	(37,763)	7,212	14,640	14,640	0.0%
CDBG Projects	665,584	660,923	855,234	927,375	1,160,016	25.1%
HOME & Federal Grants	1,532,756	679,598	519,071	300,000	300,000	0.0%
PSN Grants	88,772	154,787	117,743	0		0.0%
State Grants	0	159,641	4,649,121	0		0.0%
Other Governmental Agencies	0	63,179	64,000	0		0.0%
Transfer Out	0	360	0	0		0.0%
Transfer In	0	(3,887)	(3,572)	0		0.0%
Subtotal	**2,474,283**	**1,925,325**	**6,420,342**	**1,400,000**	**1,600,000**	**14.3%**

AMBULANCE FUND - FUND 66
REVENUE STATEMENT

	Actual 2012-2013	Actual 2013-2014	Actual 2014-2015	Adopted 2015-2016	Proposed 2016-2017	Percent Change
OPERATING REVENUE:						
Ambulance Fees	2,026,372	1,511,428	1,800,168	1,700,310	1,400,000	-17.7%
Collections Proceeds	0	166,220	175,355	200,000	200,000	0.0%
Funding Other Sources	0	0	0	0	113,361	100.0%
Total Operating Revenue	**2,026,372**	**1,677,648**	**1,975,523**	**1,900,310**	**1,713,361**	**-9.8%**

AMBULANCE FUND - FUND 66
EXPENSE STATEMENT

	Actual 2012-2013	Actual 2013-2014	Actual 2014-2015	Adopted 2015-2016	Proposed 2016-2017	Percent Change
OPERATING EXPENSES						
OPERATIONS						
Permanent Employees	927,987	871,293	822,530	894,703	762,280	-14.8%
Overtime	25,888	13,938	15,346	46,970	46,970	0.0%
Additional Pay	100	0	0	0	0	0.0%
Employee Benefits	397,730	384,160	356,187	399,301	348,914	-12.6%
Uniform Allowance	16,125	14,775	17,550	20,400	16,800	-17.6%
Travel/Training	0	0	0	5,825	5,825	0.0%
Office Supplies	0	0	0	2,390	2,390	0.0%
Equipment Maint.	379	0	0	2,987	2,987	0.0%
Gas/Diesel	29,520	32,040	25,321	30,588	30,588	0.0%
Auto Maintenance	32,340	22,144	30,296	52,974	52,974	0.0%
Auto Parts	42,458	26,645	28,254	43,000	43,000	0.0%
Billing Services	119,151	98,579	117,265	165,000	165,000	0.0%
General Health	0	0	0	7,650	7,650	0.0%
Insurance	0	0	4,332	0	0	0.0%
Public Safety Supplies	63,893	38,128	46,716	93,450	93,450	0.0%
Depreciation	186,915	193,735	200,498	106,248	108,316	1.9%
Total Operating Expenses	**1,842,486**	**1,695,437**	**1,664,295**	**1,871,486**	**1,687,144**	**-9.9%**
NON-OPERATING EXPENSES:						
Lease Agreement	1,490	738	2,246	28,824	26,217	-9.0%
Transfer Out	0	0	244,845	0	0	0.0%
Transfer In	(607,414)	(15,874)	0	0	0	0.0%
Total Non-Operating Expenses	**(605,924)**	**(15,136)**	**247,091**	**28,824**	**26,217**	**-9.0%**
Total Expenses	**1,236,562**	**1,680,301**	**1,911,386**	**1,900,310**	**1,713,361**	**-9.8%**