SALT LAKE COUNTY
TOWNSHIPS

OFFICE OF TOWNSHIP SERVICES
Planning and Development Services
2001 S. State Street N3-600 • Salt Lake City, UT 84190-4050
Phone: (385) 468-6700 • Fax: (385) 468-6674
www.pwpds.slco.org

Magna Township Planning Commission

Public Meeting Agenda

Thursday, April 14, 2016 6:30 P.M.

****AMENDED****

Location

MAGNA LIBRARY
8950 WEST MAGNA MAIN STREET
MAGNA, 84044
(385) 468-6700

UPON REQUEST, WITH 5 WORKING DAYS NOTICE, REASONABLE ACCOMMODATIONS FOR QUALIFIED INDIVIDUALS MAY BE PROVIDED. PLEASE CONTACT WENDY GURR AT 385-468-6707.
TTY USERS SHOULD CALL 711.

The Planning Commission Public Meeting is a public forum where the Planning Commission receives comment and recommendations from applicants, the public, applicable agencies and County staff regarding land use applications and other items on the Commission's agenda. In addition, it is where the Planning Commission takes action on these items. Action may be taken which may include: approval, approval with conditions, denial, continuance or recommendation to other bodies as applicable.

BUSINESS MEETING

1) Approval of Minutes from the December 17, 2015, January 14, and March 17, 2016 meetings.
2) Other Business Items (as needed)

PUBLIC HEARINGS

Administrative

29779 – Scott Wagstaff is requesting conditional use approval for a proposed automobile service station. **Location:** 3592 South 8400 West. **Zone:** C-2. **Community Council**: Magna. **Planner:** Jeff Miller

29789 – Daniel Thurgood is requesting conditional use approval for new cell tower on behalf of his client, Verizon Wireless. **Location:** 7329 West 3500 South. **Zone:** C-2. **Community Council**: Magna. **Planner:** Tom Zumbado

ADJOURN

This page intentionally left blank

SALT LAKE COUNTY
TOWNSHIPS

OFFICE OF TOWNSHIP SERVICES
Planning and Development Services
2001 S. State Street N3-600 • Salt Lake City, UT 84190-4050
Phone: (385) 468-6700 • Fax: (385) 468-6674
www.pwpds.slco.org

MEETING MINUTE SUMMARY

MAGNA TOWNSHIP PLANNING COMMISSION MEETING

Wednesday, March 17, 2016 6:30 p.m.

Approximate meeting length: 20 minutes
Number of public in attendance: 7
Summary Prepared by: Wendy Gurr
Meeting Conducted by: Commissioner Kunz

*NOTE: **Staff Reports** referenced in this document can be found on the State and County websites, or from Salt Lake County Planning & Development Services.

ATTENDANCE

Commissioners and Staff:

Commissioners	Public Mtg	Business Mtg	Absent
Dan Cripps	x		
Michael Brooks			x
Paul Kunz	x	x	
Nathan Pilcher	x		
Kim Gilbert	x	x	
Mark Eliesen	x	x	
Ammon Lockwood	x	x	

Planning Staff / DA	Public Mtg	Business Mtg
Wendy Gurr	x	x
Max Johnson	x	x
Zach Shaw (DA)	x	

BUSINESS MEETING

Meeting began at – 6:30 p.m.

1) Approval of Minutes from the December 17, 2015 meeting.
Motion: minutes were not available for review.
Motion by*:*
2nd by:
Vote*:*

2) Approval of Minutes from the January 14, 2016 meeting.
Motion: minutes were not available for review.
Motion by*:*
2nd by:
Vote*:*

3) Bylaws Adoption
County Township Services Planning Supervisor Max Johnson advised the bylaws were adopted by the County Council.

4) New email addresses

County Township Services Planning Supervisor Max Johnson provided the new email addresses, advised both personal and County emails will be used over the next few months and eventually only County emails will be used for the Planning commission purpose.

5) Other Business Items (as needed)

   No other business items to discuss.

Commissioner Pilcher arrived at 6:34 pm

PUBLIC HEARINGS

Hearings began at – 6:34 p.m.

Commissioner Cripps arrived at 6:35 pm

29748 – (Confirm Changes) - Amend Chapter 19.78 of the Salt Lake County Zoning Ordinance – Planned Unit Developments (PUD). **Presenter:** Max Johnson

Salt Lake County Township Services Planning Supervisor Max Johnson provided an overview of the summary of recommendations on the PUD ordinance amendment.

PUBLIC PORTION OF MEETING OPENED

Speaker # 1: Magna Town Council
Name: Todd Richards
Address: Not provided
Comments: Asked how wide the minor streets are compared to a regular street.

Mr. Johnson said suggest taking the sentence out, but majority is twenty-four feet. Mr. Richards said if anyone parks out on the street, it's useless. Mr. Johnson said they removed that sentence.

PUBLIC PORTION OF MEETING CLOSED

Motion: To recommend approval of file #29748 to the County Council with suggested changes.
Motion by*:* Commissioner Cripps
2nd by: Commissioner Eliesen
Vote*:* Commissioners voted unanimously in favor (of commissioners present)

MEETING ADJOURNED

Time Adjourned – 6:50 p.m.

SALT LAKE COUNTY
TOWNSHIPS

OFFICE OF TOWNSHIP SERVICES
Planning and Development Services
2001 S. State Street N3-600 • Salt Lake City, UT 84190-4050
Phone: (385) 468-6700 • Fax: (385) 468-6674
www.pwpds.slco.org

File # 29779

Conditional Use Summary and Recommendation

Public Body: Magna Township Planning Commission **Meeting Date: 04/14/2016**
Parcel ID: 14-32-126-019 **Current Zone: C-2**
Property Address: 3592 South 8400 West
Request: Conditional use approval for a proposed automobile service station on 1.51 acres.

Community Council: Magna **Township: Magna Township**
Planner: Jeff Miller
Planning Commission Recommendation: Not yet received
Magna Community Council Recommendation: Approval
Magna Town Council Recommendation: Will be received on 4/7/2016
Planning Staff Recommendation: Approval
Applicant Name: Scott Wagstaff

PROJECT DESCRIPTION

Scott Wagstaff is requesting conditional use approval for a proposed automobile service station on 1.51 acres. Automobile service stations are a permitted use in the C-2 zone. However, since the parcel is over one acre in size, the application is required to go through the conditional use approval process. Currently, the site is undeveloped. The undeveloped parcel was part of a previously approved commercial PUD. As part of the commercial PUD, an access easement was put in place to ensure continued access across the west portion of all of the parcels involved in the PUD. The development of this parcel will maintain the access easement, and improve traffic flow through the commercial PUD.

SITE & VICINITY DESCRIPTION (see attached map)

The parcel for the proposed automobile service station is located on a corner lot, which fronts 8400 West and Elk Point Drive. Directly to the north are four other parcels, which are part of the commercial PUD. A large commercial development known as Arbor Park is located directly to the east of the property. South of the property is an LDS Church. To the west is a large area of single-family homes, which are zoned R-1-7/zc.

GENERAL PLAN CONSIDERATIONS

The parcel is located in an area of "Moderate Change" according to the Magna Township General Plan. Moderate changes in land uses will occur in this area, and may represent reasonable changes to the typical land uses for the area/corridor. Changes may occur in clusters, while the land uses of the overall area/corridor will remain largely consistent. Growth in these areas will begin to trend upward, allowing for a transition to more intensive land uses. In addition, the parcel is located in an RDA project area, and the proposed use has the support of the Salt Lake County Economic Development team.

LAND USE CONSIDERATIONS (C-2 Zone)

Requirement	Standard	Proposed	Compliance Verified
Height	No building or structure shall contain more than six stories, or exceed 75 feet in height	One story, and less than 75 feet	Yes
Front Yard Setback	Other buildings: 20 feet	20 feet	Yes
Side Yard Setback	Other buildings and structures: None, except that wherever a building is located upon a lot adjacent to a residential land use, there shall be provided a side yard of not less than ten feet on the side of the building adjacent to the residential property, and on corner lots the side yard which faces on a street shall not be less than twenty feet.	The side yard is more than 10 feet adjacent to residential properties, and maintains a side yard greater than 20 feet for the side yard which faces on a street for the corner lot.	Yes
Rear Yard Setback	Other buildings and structures: None, except that on corner lots which rear upon the side yard of another lot in a residential or agricultural zone, the minimum rear yard shall be ten feet.	More than 10 feet away from the side yard of an adjacent residential property.	Yes
Lot Width	Other buildings and structures: None.	Complies	Yes
Lot Area	Other buildings and structures: None.	Complies	Yes
Parking (19.80.040)	One parking stall for every 250 square feet of gross floor area.	Proposed building is 4,000 square feet, which requires a minimum of 16 stalls. The applicant has proposed 19 stalls, which Planning Staff supports.	Yes, with Planning Commission approval for the 3 extra stalls. As part of the commercial PUD the extra stalls can be warranted.
Lot Coverage	No building or group of buildings, with their accessory buildings, shall cover more than 60 percent of the area of the lot.	The building footprint of the proposed building is less than 60 percent of the area of the lot.	Yes

Compatibility with existing buildings in terms of size, scale and height.	Yes
Compliance with Landscaping Requirements Verified.	Yes
Compliance with the General Plan.	Yes

ISSUES OF CONCERN/PROPOSED MITIGATION

Planning Staff has not identified any issues of concern with the proposed request from the applicant.

NEIGHBORHOOD RESPONSE

Planning Staff has not received any response from the neighborhood as of the completion of this report on March 7, 2016.

MAGNA COMMUNITY COUNCIL RESPONSE

This item was presented to the Magna Community Council on Thursday, March 17th. They recommended approval of the requested conditional use.

MAGNA TOWN COUNCIL RESPONSE

This item will be presented to the Magna Town Council on Thursday, April 7th. Their recommendation and any conditions of approval will be presented to the Magna Township Planning Commission at the planning commission meeting on Thursday, April 14th.

MAGNA TOWNSHIP PLANNING COMMISSIONS' RESPONSE

This item will be presented to the Magna Township Planning Commission on Thursday, April 14th.

REVIEWING AGENCIES RESPONSE

AGENCY: County Geology DATE: 03/07/16
RECOMMENDATION: Conceptual Approval – Technical Review Required – 1. Need to submit a copy of the Geotechnical Engineering Report. 2. Property is mapped as Low Liquefaction.

AGENCY: County Grading DATE: 03/07/16
RECOMMENDATION: Conceptual Approval – Technical Review Required – 1. Site is in excess of one acre and will require the Development of a Storm Water Pollution Prevention Plan (SWPPP). 2. At the time of the Building and or Grading Permit a Notice of Intent (NOI) from the State of Utah is required. 3. Fill & Cut slopes are not to exceed 2:1 (50%) without written justification by the Geotechnical engineer. 4. North property line may require the use of a retaining wall. 5. A Storm Water Maintenance Agreement and Management Plan are required as part of the development of the planned Detention pond and orifice plate, additional BMP's may be required. 6. All site Grading is to be completed under the Grading Permit process administered through Planning and Development Services. 7. Need to submit a copy of the Geotechnical Engineering report for review and comment.

AGENCY: County Hydrology DATE: 03/23/16
RECOMMENDATION: Conceptual Approval – Technical Review Required – Final Site Plan Technical Approval to be completed at time of Final Site Plan Submittal.

AGENCY: Salt Lake County Health Department DATE: 03/15/16
RECOMMENDATION: Conceptual Approval – Technical Review Required – Provide Water and Sewer Availability Letters.

AGENCY: County Traffic Engineer DATE: 02/29/16

RECOMMENDATION: Conceptual Approval – Technical Review Required – Conditions of Approval are: 1. Submit copy of UDOT approval for modification to access on 8400 West. 2. Upgrade ADA ramp at intersection of 8400 West and Elk Point Drive to current standard. 3. Repair any damaged curb, gutter, and sidewalk.

AGENCY: United Fire Authority DATE: 03/01/16
RECOMMENDATION: Conceptual Approval – Technical Review Required – 1 new Fire Hydrant required. Inside turning radius 28 degrees.

AGENCY: Building DATE: 03/28/16
RECOMMENDATION: Conceptual Approval – Technical Review Required – No issues with the site plan. Building permits are required for the construction of the new building as well as the construction of the canopy and all other related systems regulated by the building code. At time of building permit application, provide complete building plans showing compliance with current building code. At time of building permit application, provide fire flow verification for the nearest fire hydrant and show how compliance is going to be made with any Unified Fire District Guidelines.

AGENCY: Operations DATE: 03/01/16
RECOMMENDATION: Conceptual Approval – Technical Review Required.

Compliance with current building, construction, engineering, fire, health, landscape and safety standards will be verified prior to final approval.

PLANNING STAFF ANALYSIS

19.04.140 - Conditional use.

"Conditional use" means a use of land for which a conditional use permit is required pursuant to Chapter 19.84 of this title.

19.80.040 - Number of spaces required.

22. Retail stores, shops, etc., except as provided in this subsection, one space for each two hundred fifty square feet of gross floor area;

Planning Staff has thoroughly analyzed the proposed automobile service station, and has found that the request is cohesive with the surrounding uses and zones.

PLANNING STAFF RECOMMENDATION

Planning Staff has reviewed this request for compliance with the Magna Township General Plan, standards set forth in the Salt Lake County Zoning Ordinance (Title 19), and for compatibility with existing neighboring land uses and zones. Staff recommends that the requested conditional use approval for the automobile service station be approved by the Magna Township Planning Commission, subject to the following allowance.

1. The Planning Commission approves the proposed amount of parking stalls (19 stalls).

29779

Zoning Map

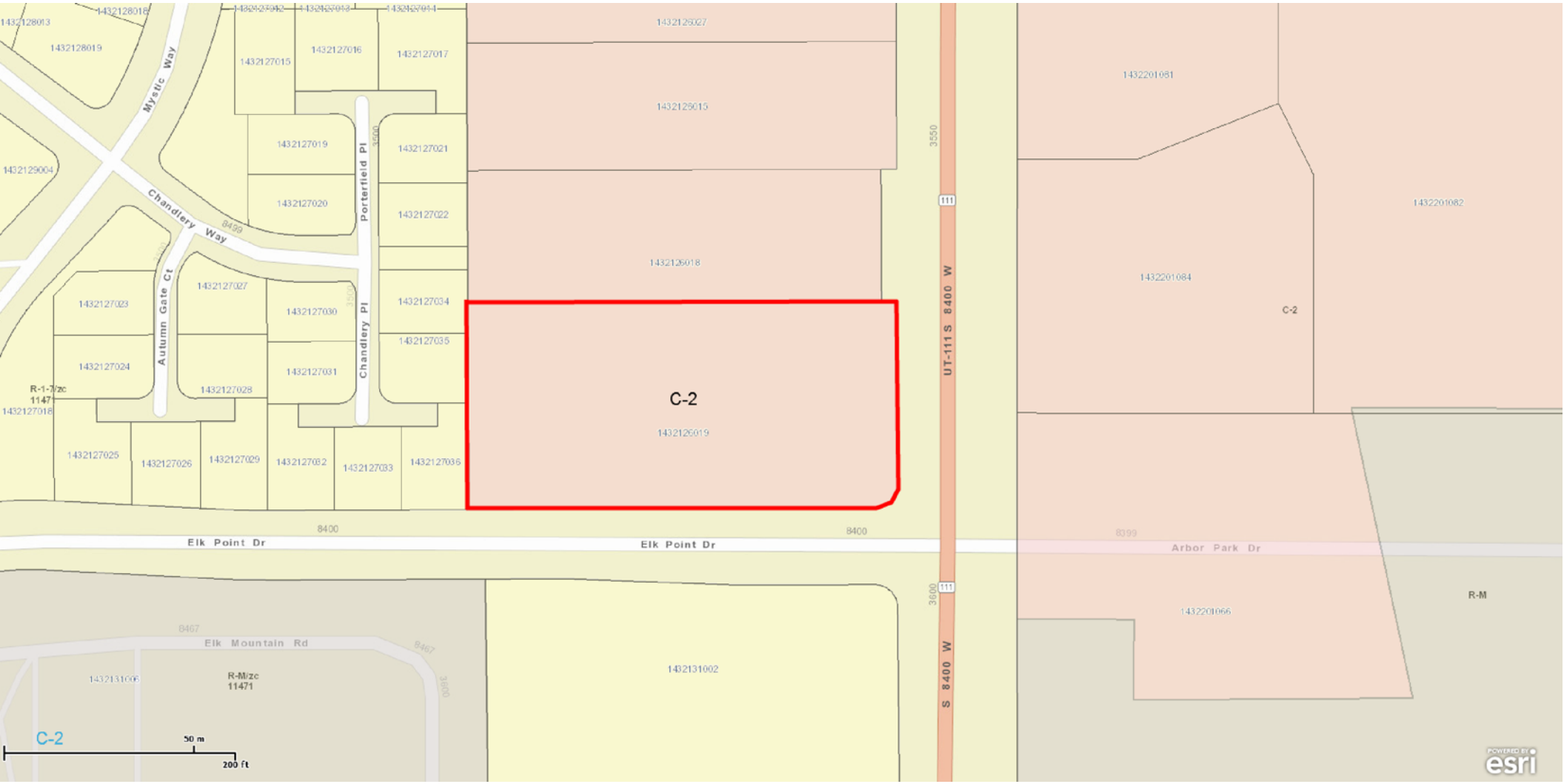

Wed Nov 25 2015 01:53:00 PM.

29779

Aerial Map

Wed Nov 25 2015 01:57:44 PM.

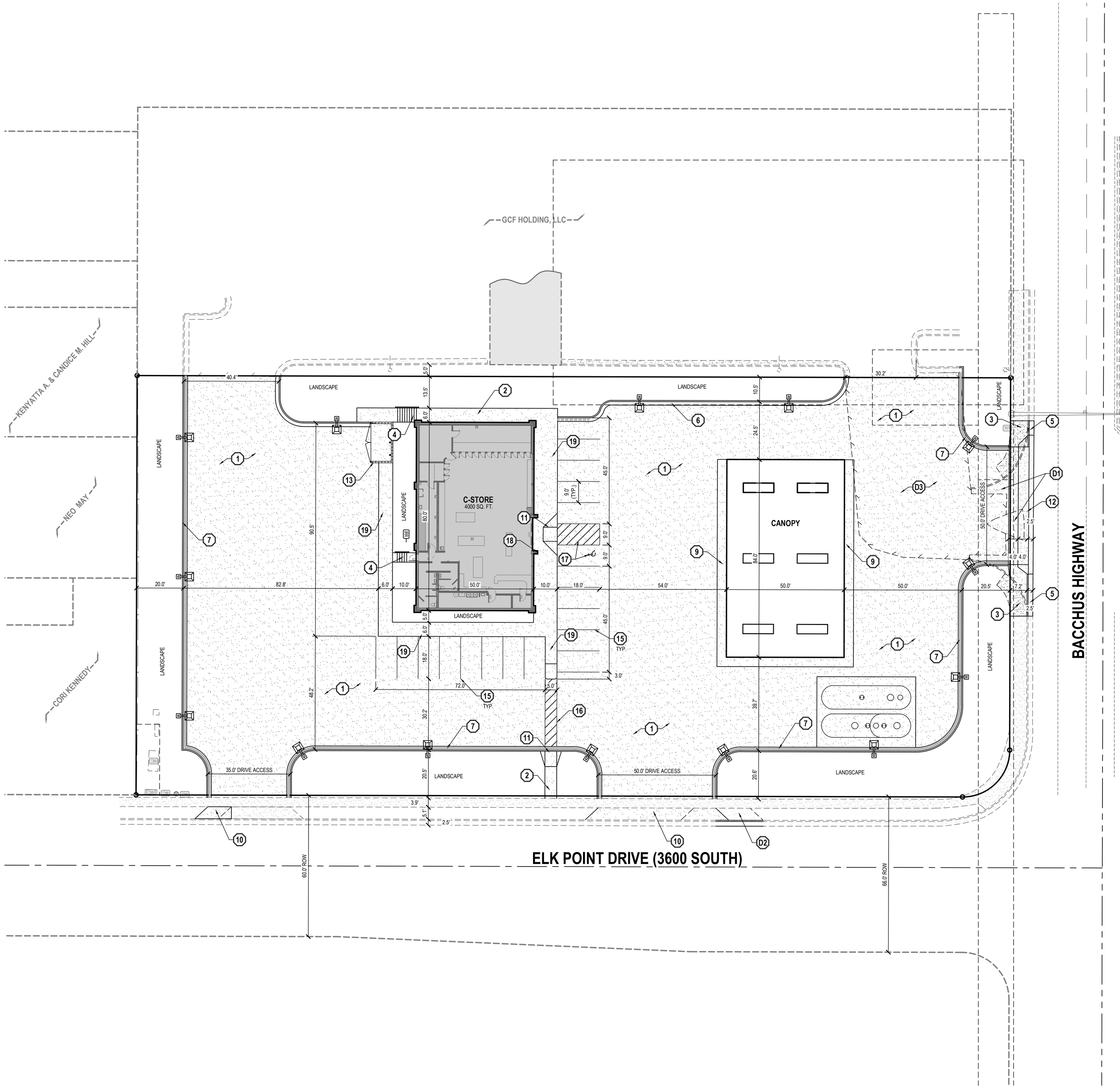

GENERAL NOTES

1. ALL WORK TO COMPLY WITH THE GOVERNING AGENCY'S STANDARDS AND SPECIFICATIONS.
2. ALL IMPROVEMENTS MUST COMPLY WITH ADA STANDARDS AND RECOMMENDATIONS.
3. SEE LANDSCAPE/ARCHITECTURAL PLANS FOR CONCRETE MATERIAL, COLOR, FINISH, AND SCORE PATTERNS THROUGHOUT SITE.
4. ALL PAVEMENT MARKINGS SHALL CONFORM TO THE LATEST EDITION OF THE M.U.T.C.D. (MANUAL ON UNIFORM TRAFFIC CONTROL DEVICES).
5. ALL SURFACE IMPROVEMENTS DISTURBED BY CONSTRUCTION SHALL BE RESTORED OR REPLACED, INCLUDING TREES AND DECORATIVE SHRUBS, SOD, FENCES, WALLS AND STRUCTURES, WHETHER OR NOT THEY ARE SPECIFICALLY SHOWN ON THE CONTRACT DOCUMENTS.
6. NOTIFY ENGINEER OF ANY DISCREPANCIES IN DESIGN OR STAKING BEFORE PLACING CONCRETE OR ASPHALT.
7. THE CONTRACTOR IS TO PROTECT AND PRESERVE ALL EXISTING IMPROVEMENTS, UTILITIES, AND SIGNS, ETC. UNLESS OTHERWISE NOTED ON THESE PLANS.

SITE SUMMARY TABLE

DESCRIPTION	AREA (SF)	PERCENTAGE
PAVEMENT	47,513	72%
ROOF	4,000	6%
LANDSCAPING	14,552	22%
TOTAL SITE	66,065 1.52 ACRES	100%

PARKING DATA TABLE

STANDARD STALLS	18
HANDICAP-ACCESSIBLE STALLS	1
TOTAL STALLS	19

SCOPE OF WORK:

PROVIDE, INSTALL AND/OR CONSTRUCT THE FOLLOWING PER THE SPECIFICATIONS GIVEN OR REFERENCED, THE DETAILS NOTED, AND/OR AS SHOWN ON THE CONSTRUCTION DRAWINGS:

DEMOLITION KEY NOTES

- D1 REMOVE EXISTING DRIVE APPROACH AND "PORK CHOP" ISLAND.
- D2 REMOVE EXISTING DRIVE APPROACH.
- D3 REMOVE EXISTING ASPHALT.

SITE PLAN KEY NOTES

1. CONCRETE PAVEMENT: 6" THICK CONCRETE WITH 6" UNTREATED BASE COURSE PER GEOTECHNICAL REPORT AND DETAIL 1/C 6.0.
2. 4" THICK CONCRETE SIDEWALK PER APWA STANDARD PLAN NO. 231 AND SPECIFICATIONS.
3. SIDEWALK PER UDOT STANDARD DRAWING NO. GW 11 AND SPECIFICATIONS.
4. STAIRS IN SIDEWALK. SEE GRADING PLAN FOR ELEVATION INFORMATION. SEE DETAIL 7/C 6.0 FOR HANDRAIL INFORMATION..
5. 30" TYPE "B1" CURB AND GUTTER PER UDOT STANDARD DRAWING NO. GW 2 AND SPECIFICATIONS.
6. 24" COLLECTION CURB AND GUTTER PER APWA STANDARD PLAN NO. 205 TYPE "E" AND SPECIFICATIONS.
7. 24" REVERSE PAN CURB AND GUTTER PER DETAIL 2/C 6.0.
8. TRANSITION BETWEEN COLLECTION CURB AND GUTTER AND REVERSE PAN CURB AND GUTTER.
9. 4" WATERWAY PER APWA STANDARD PLAN NO. 211 AND SPECIFICATIONS.
10. FLARED DRIVE APPROACH PER SALT LAKE COUNTY STANDARD PLAN NO. 125 AND SPECIFICATIONS.
11. HANDICAP ACCESS RAMP PER APWA STANDARD PLAN NO. 236 AND SPECIFICATIONS.
12. FLARED DRIVEWAY WITH ADJACENT SIDEWALK PER UDOT STD. DWG. NO. GW 4A WITH 7" THICK SIDEWALK.
13. DOUBLE TRASH ENCLOSURE PER DETAILS 3-5/C 6.0.
14. NOT USED
15. 4" WIDE SOLID WHITE PAVEMENT MARKING PER M.U.T.C.D. STANDARD PLANS.
16. WHITE CROSSWALK MARKING PER M.U.T.C.D. STANDARD PLANS
17. PAINTED ADA SYMBOL AND ASSOCIATED HATCHING PER M.U.T.C.D. STANDARD PLANS.
18. "HANDICAP PARKING" SIGN PER M.U.T.C.D. STANDARD PLANS INSTALLED ON BUILDING.
19. MONOLITHIC CURB PER DETAIL 6/C 6.0.

NORTH

HORIZONTAL GRAPHIC SCALE

20 0 10 20 40

(IN FEET)
HORZ: 1 inch = 20 ft.

ENSIGN
THE STANDARD IN ENGINEERING

SALT LAKE CITY
45 W. 10000 S., Suite 500
Sandy, UT 84070
Phone: 801.255.0529

LAYTON
Phone: 801.547.1100

TOOELE
Phone: 435.843.3590

CEDAR CITY
Phone: 435.865.1453

RICHFIELD
Phone: 435.896.2983

WWW.ENSIGNENG.COM

FOR:
HOLIDAY OIL
3115 WEST 2100 SOUTH
WEST VALLEY CITY, UTAH

CONTACT:
JERRY WAGSTAFF
PHONE: 801-973-7002

MAGNA HOLIDAY OIL

3592 SOUTH 8400 WEST
MAGNA, UTAH

LICENSED PROFESSIONAL ENGINEER
7699058
BOYD
PREECE
2/9/16
STATE OF UTAH

2016-08-09 SUBMITTAL

PRELIMINARY SITE PLAN

PROJECT NUMBER 6753	PRINT DATE 2/9/16
DRAWN BY D. COWLEY	CHECKED BY B. PREECE
PROJECT MANAGER C. DUNCAN	

C 1.0

BENCHMARK

NORTH QUARTER CORNER OF
SECTION 32
T1S, R2W
SLB&M
ELEVATION = 4411.33'

811 Know what's below. Call before you dig.

CALL BLUESTAKES
@ 811 AT LEAST 48 HOURS
PRIOR TO THE
COMMENCEMENT OF ANY
CONSTRUCTION.

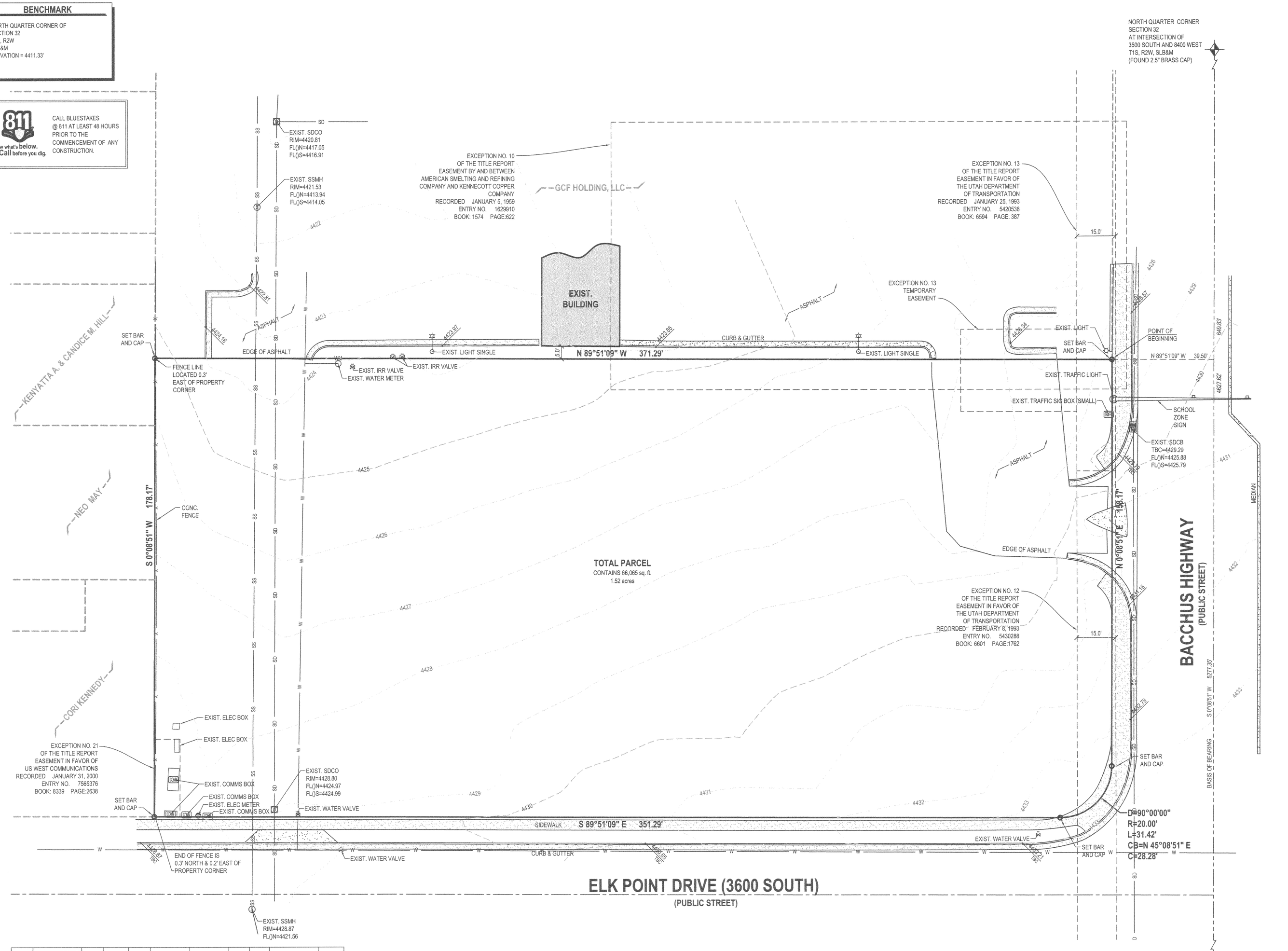

VICINITY MAP
(NOT TO SCALE)

LEGEND

ENSIGN ENG. LAND SURV.

SECTION CORNER	STORM DRAIN CATCH BASIN	MINOR CONTOURS 1' INCREMENT	DEED LINE	SW	SECONDARY WATERLINE
MONUMENT	STORM DRAIN COMBO BOX	MAJOR CONTOURS 5' INCREMENT	TANGENT LINE	IRR	IRRIGATION LINE
EXIST REBAR AND CAP	STORM DRAIN CULVERT	CONCRETE	EXIST DITCH FLOW LINE		CENTERLINE
SET ENSIGN REBAR AND CAP	SIGN	BUILDING PRIMARY	FENCE	X	PROPERTY LINE
SET RIVET	UTILITY MANHOLE	BUILDING SECONDARY	EDGE OF ASPHALT		ADJACENT PROPERTY LINE
WM WATER METER	UTILITY POLE	BUILDABLE AREA WITHIN SETBACKS	SANITARY SEWER	SS	ELECTRIC POWERLINE
W WATER MANHOLE	GAS METER	PUBLIC DRAINAGE EASEMENT	STORM DRAIN LINE	SD	TELEPHONE LINE
WV WATER VALVE	TREE	ADJACENT RIGHT OF WAY	GAS LINE	G	IRRIGATION VALVE
FIRE HYDRANT	OHP OVERHEAD POWER LINE	RIGHT OF WAY	WATER LINE	W	SANITARY SEWER MANHOLE
E ELECTRIC METER					STORM DRAIN CLEAN OUT

SURVEYOR'S NARRATIVE

I, Patrick M. Harris do hereby state that I am a Professional Land Surveyor and that I hold certificate no. 286882 as prescribed by the laws of the State of Utah and represent that I have made a survey of the following described property. The Purpose of this survey is to provide an ALTA/ACSM Land Title Survey for use by the client. The Basis of Bearing is the line between the North Quarter Corner of Section 32 and the South Quarter Corner of Section 32, Township 1 South, Range 2 West, Salt Lake Base & Meridian, measuring South 0°08'51" West 5277.35 feet.

PROPERTY DESCRIPTION

Beginning at a point South 00°08'51" West 649.83 feet along the Quarter Section Line and North 89°51'09" West 39.50 feet from the North Quarter corner of Section 32, Township 1 South, Range 2 West, Salt Lake Base and Meridian; thence North 89°51'09" West 371.29 feet; thence South 00°08'51: West 178.17 feet; thence South 89°51'09" East 351.29 feet to the point of tangency of a 20.00 foot radius curve to the left; thence Northeasterly 31.42 feet along the arc of said curve to the West right of way line of 8400 West Street (Note: central angle is 90°00'00", long chord bears North 45°08'51" East 28.28 feet); thence North 00°08'51" East 158.17 feet along said right of way line to the point of beginning.

To: First American Title Insurance Company, Surety Title Agency and Wagstaff Investments,LLC.

This is to certify that this map or plat and the survey on which it is based were made in accordance with 2011 Minimum Standard Detail Requirements for ALTA/ACSM Land Title Surveys, jointly established and adopted by ALTA and NSPS, and includes items 1, 2, 4, 5, 8, 9, 11(a), 13, 14 and 20(a) of Table A hereof.

The field work was completed on 11/05/2015

Date of Plat or Map 11/23/2015

Feb. 8, 2016
Date

Patrick M. Harris
License No. 286882

Note: For conditions of record not shown hereon as well as specific references to items in the title report, please refer to a title report supplied by, Surety Title Agency of Midvale, Utah under Commitment No. 29662-17-O, dated effective, April 17, 2007.

SCHEDULE B-2 EXCEPTIONS

10. Subject to a perpetual easement, right and privilege on the part of Kennecott Corporation; its successor, lessees, licenses and assigns, at any time and at all times hereafter, to discharge through the medium of the air, over and upon each and every portion of the herein described property, any and all gases, particulates, dust dirt, fumes and other substances and matter which may be released given, thrown or blown off, emitted or discharged in the course of, by or through the existence of operations, of any and all of the smelting plants, reduction works, mills, refineries, power plants, manufactories, tailing deposits and other works and facilities which are now or which may hereafter at any time be established or operated, as created in that certain Easement by and between American Smelting and Refining Company and Kennecott Copper Company, dated January 2, 1959, and Recorded January 5, 1959, Book 1574, Page 622, Entry No.1629910. (As Shown on Survey)

11. Subject to a mineral reservation by American Smelting and Refining Company of all minerals and mineral and mining rights, including oil and gas, but excluding sand, gravel, lime, sand and water, as more particularly described in that certain Indenture between American Smelting and Refining Company and Kennecott Copper Corporation, dated January 2, 1959, recorded January 5, 1959, Book 1574, Page 546, Entry No. 1629909.

12. Subject to a perpetual easement in favor of the Utah Department of Transportation, upon three parts of an entire tract of property, in the Northeast Quarter of the Northwest Quarter of Section 22, Township 1 South, Range 2 West, Salt lake Base and Meridian, for the purpose of constructing and maintaining an irrigation facility and appurtenant parts thereof incident to the construction of a highway known as Project No. 0200. Said parts of an entire tract are three strips of land 15 feet wide adjoining Westerly the following described portions of the Westerly right-of-way line of said property:

13. Easement; wherein Douglas K. Culley conveys to Utah Dept. of Transportation for the purpose of construction and maintaining thereon an irrigation facility and appurtenance parts thereof incident to the construction of a highway known as Project No 0200 also a temporary easement for reconstruction thereon a driveway and appurtenant parts thereof over the following property:

Easement dated December 28, 1992, recorded January 25, 1993, Book 6594, Page 387, Entry No. 5420538. (As Shown on Survey)

14. Subject to the terms and conditions of that certain Declaration of Covenants, Restrictions and Easements, executed by Arbor Commercial Properties, L.C., a Utah limited liability company, dated February 8, 1999, and recorded February 11, 1999, Book 8248, Page 6534, Entry No. 7253669. (Blanket in Nature)

15. Subject to the terms and conditions of that certain Declaration of Easements, executed by Cyprus Credit Union, a Utah corporation, and Arbor Commercial Properties, L.C., a Utah limited liability company, dated February 25, 1999, and recorded March 1, 1999, Book 8254, Page 1098, Entry No. 7272311. (Blanket in Nature)

Consent and Agreement dated May 5, 1999, by Nu-Team, Inc. Employees Pension and Profit Sharing Plan and Nu-team Pension and Profit Sharing Plan, Inc., a Utah corporation, recorded May 12, 1999, Book 8276, Page 6642, Entry No. 7352040. (Blanket in Nature)

16. Subject to the terms and conditions of that certain Amended and Restated Declaration of Covenants, Restrictions and Easements, executed by Arbor Commercial Properties, L.C., a Utah limited liability company, and Harman Management Corporation, a Utah corporation, dated April 2, 1999, and recorded April 6, 1999, and recorded April 6, 1999, Book 8266, Page 835, Entry No. 7314183. (Blanket in Nature)

17. Subject to the terms and conditions of that certain Declaration of Easements, executed by Cyprus Credit Union, a Utah corporation, and Arbor Commercial Properties, L.C., a Utah limited liability company, dated May 1999, and recorded May 12, 1999, Book 8276, Page 6646, Entry No. 7352041. (Blanket in Nature)

20. Statutory Quitclaim Deed; wherein Kennecott Utah Copper Corporation quitclaim to Elk run L.L.C., a Utah Limited Liability Company certain parcels of land, excepting and reserving all oil, gas and other minerals of every kind and description underlying the surface of the subject property; and reserving to grantor all appurtenant water and water rights and all non-appurtenant water and water rights held, owned, or used in connection with the subject property, and all stock or other evidence of ownership of water or use thereof. (See documents for description.)

Quitclaim Deed dated November 12, 1998, recorded November 13, 1998, Book 8161, Page 1634, Entry No. 7153736.

21. Easement in favor of US West Communications Inc. for a perpetual easement to construct, reconstruct, operate, maintain and remove such telecommunications facilities as they may require upon, over and across the following described property:

Easement recorded January 31, 2000 as Entry No. 7565376 in Book 8339 at Page 2683.

(Shown on Survey)

HORIZONTAL GRAPHIC SCALE

20 0 10 20 40

(IN FEET)
HORZ: 1 inch = 20 ft.

NORTH

LOCATED IN THE NORTHWEST QUARTER
OF SECTION 32
TOWNSHIP 1SOUTH, RANGE 2 WEST
SALT LAKE BASE AND MERIDIAN
MAGNA, SALT LAKE COUNTY, UTAH

ENSIGN

SALT LAKE CITY
45 W. 10000 S., Suite 500
Sandy, UT 84070
Phone: 801.255.0529
Fax: 801.255.4449

LAYTON
Phone: 801.547.1100

TOOELE
Phone: 435.843.3590

CEDAR CITY
Phone: 435.865.1453

RICHFIELD
Phone: 435.590.0187

WWW.ENSIGNUTAH.COM

FOR:
HOLIDAY OIL
3115 WEST 2100 SOUTH
WEST VALLEY CITY, UTAH 84119

CONTACT:
JERRY WAGSTAFF
PHONE: 801-973-7002
FAX:

HOLIDAY OIL
ALTA / ACSM LAND TITLE & TOPOGRAPHY SURVEY
3592 SOUTH 8400 WEST
MAGNA, UTAH

PROFESSIONAL LAND SURVEYOR
No. 286882
PATRICK M. HARRIS
STATE OF UTAH

ALTA /ACSM
LAND TITLE
& TOPOGRAPHY
SURVEY

PROJECT NUMBER 6753	PRINT DATE 11/12/2015
DRAWN BY B. HANEL	CHECKED BY
PROJECT MANAGER P. HARRIS	

1-1

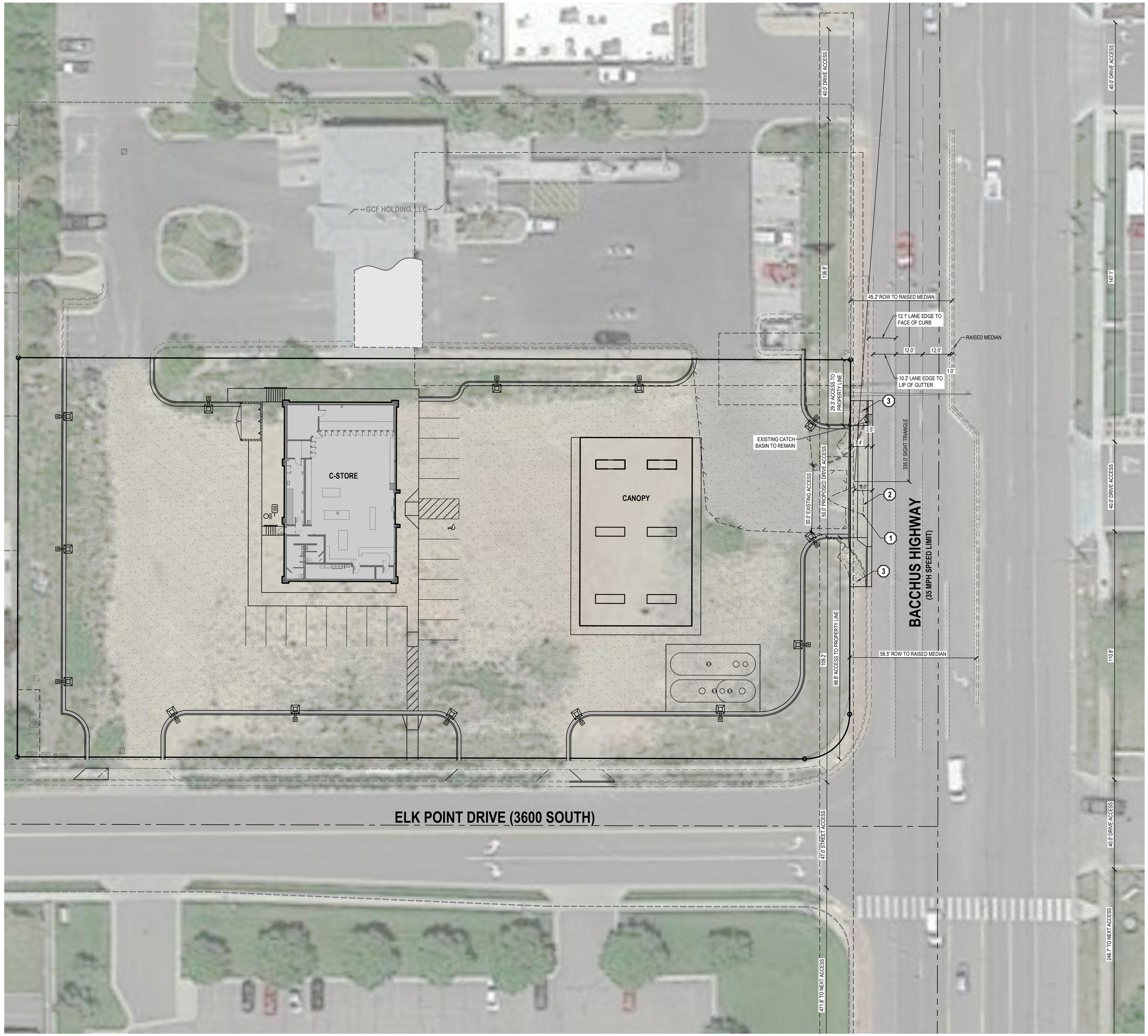

UDOT NOTES

1. UDOT RESERVES THE RIGHT, AT ITS OPTION, TO INSTALL A RAISED MEDIAN ISLAND OR RESTRICT THE ACCESS TO A RIGHT-IN OR RIGHTOUT AT ANY TIME.
2. WORK ON THE UDOT RIGHT-OF-WAY IS SEASONALLY RESTRICTED FROM OCTOBER 15 TO APRIL 15.
3. ROW WORK: WORK IS NOT ALLOWED ON THE RIGHT-OF-WAY DURING THE AM/PM PEAK TRAFFIC HOURS (6:00 – 9:00 AM AND 3:30 – 6:00 PM). ADDITIONAL WORK RESTRICTIONS OR MODIFICATIONS MAY BE IMPOSED AT THE TIME OF THE ENCROACHMENT PERMIT.
4. REPLACE ALL PAVEMENT MARKINGS IN KIND (TAPE WITH TAPE AND PAINT WITH PAINT). INSTALL ALL PAINT LINES WITH PERMANENT PAINT APPLICATION PER UDOT SPECIFICATION 02765. PAINT MUST HAVE AT LEAST 6 MONTHS LIFE AS DETERMINED BY UDOT'S PERMITS OFFICER.
5. ALL NEW PAVEMENT WORDS, ARROWS AND SYMBOLS MARKING WITHIN THE RIGHT-OF-WAY SHALL BE PRE-FORMED THERMO PLASTIC. ALL LETTERS, ARROWS, AND SYMBOLS SHALL CONFORM WITH THE "STANDARD ALPHABET FOR HIGHWAY SIGNS AND PAVEMENT MARKINGS" ADOPTED BY THE FEDERAL HIGHWAY ADMINISTRATION.
6. ALL SIGNS INSTALLED ON THE UDOT RIGHT-OF-WAY MUST BE HIGH INTENSITY GRADE (TYPE IX SHEETING) WITH A B3 SLIP BASE. INSTALL ALL SIGNS PER UDOT SN SERIES STANDARD DRAWINGS.
7. BEFORE COMMENCING WORK ON THE STATE HIGHWAY, THE GENERAL CONTRACTOR IS REQUIRED TO OBTAIN AN ENCROACHMENT PERMIT FROM THE APPLICABLE REGION'S PERMITS OFFICE BEFORE WORKING WITHIN THE STATE RIGHT-OF-WAY.
8. NO ROAD CUTS ALLOWED ON THIS JOB.
9. FOR ALL UTILITY TAPS (ROAD CUTS), USE FLOWABLE FILL PER UDOT'S CURRENT MIX DESIGN (50-150 PSI) UDOT SPEC. 03575.
10. ALL UTILITIES WITHIN THE PAVED SURFACE MUST BE BORED.
11. FOR EXCAVATIONS OUTSIDE OF THE ROADWAY, BACK FILL WITH UDOT APPROVED GRANULAR BORROW AND ROAD BASE. COMPACTION PER UDOT SPEC. 2056 AND 2721.
12. OWNER, DEVELOPER, AND/OR THE CONTRACTOR IS REQUIRED TO HIRE AN INDEPENDENT COMPANY FOR ALL TESTING WITHIN THE UDOT RIGHT-OF-WAY.
13. OWNER, DEVELOPER, AND THE CONTRACTOR ARE RESPONSIBLE FOR ANY DAMAGE TO THE UDOT RIGHT-OF-WAY THAT MAY BE DIRECTLY OR INDIRECTLY CAUSED BY THE DEVELOPMENT ACTIVITY.
14. TRAFFIC SIGNAL INSTALLATION OR MODIFICATION REQUIRES A SEPARATE WARRANTY BOND ONCE THE WORK HAS BEEN COMPLETED AND ACCEPTED. THE PERMITTEE IS RESPONSIBLE FOR HIRING AN INDEPENDENT INSPECTION COMPANY TO PERFORM INSPECTION SERVICES FOR ALL SIGNAL WORK COMPLETED. FOR A LIST OF THE UDOT APPROVED CONTRACTORS AND CONSULTANTS CONTACT THE APPROPRIATE REGIONS TRAFFIC SIGNALS ENGINEER.
15. PARTIAL CONCRETE PANEL REPLACEMENT IS NOT ALLOWED. WHEN PANELS ARE REMOVED, THE ENTIRE PANEL IS REQUIRED TO BE REPLACED PER UDOT STANDARDS, SPECIFICATIONS, AND STANDARD DRAWINGS.
16. DOUBLE SAW CUT THE CONCRETE TO PREVENT THE SPALLING OF OTHER CONCRETE PANELS AND TO AVOID OVER CUTS. OVER CUTS AND SPALLS WILL REQUIRE FULL PANEL REPLACEMENT. REFERENCES
17. ALL ABOVE GROUND FEATURES INCLUDING UTILITIES (POLES, FIRE HYDRANTS, BOXES, ETC.) MUST BE RELOCATED OUT OF THE AASHTO CLEAR ZONE OR A MINIMUM OF 18" BEHIND CURB.

SCOPE OF WORK:

PROVIDE, INSTALL AND/OR CONSTRUCT THE FOLLOWING PER THE SPECIFICATIONS GIVEN OR REFERENCED, THE DETAILS NOTED, AND/OR AS SHOWN ON THE CONSTRUCTION DRAWINGS:

1. FLARED DRIVEWAY WITH ADJACENT SIDEWALK PER UDOT STD. DWG. NO. GW 4A WITH 7" THICK SIDEWALK.
2. EXISTING ACCESS TO BE REMOVED AND REPLACED: SAW CUT AT LIP OF GUTTER , REMOVE CURB AND GUTTER, AND USE EDGE OF ASPHALT AS FRONT FORM FOR NEW TYPE B1 CURB AND GUTTER PER UDOT STD. DWG. NO. GW 2 AND SPECIFICATIONS.
3. REMOVE AND REPLACE SIDEWALK PER UDOT STANDARD DRAWING NO. GW 11 AND SPECIFICATIONS.

RIGHT TURN DECELERATION LANE CALCULATIONS

DESIRED FULL DECELERATION LENGTH FOR 35 MPH ROAD = 213'
(INTERPOLATED FROM AASHTO DESIGN MANUAL PAGE 9-126)
AVAILABLE LENGTH BETWEEN DRIVE ACCESSES = 135'
RIGHT TURN POCKET WILL NOT FIT BETWEEN THE TWO ACCESSES.

HORIZONTAL GRAPHIC SCALE

20 0 10 20 40

(IN FEET)
HORZ: 1 inch = 20 ft.

ENSIGN
THE STANDARD IN ENGINEERING

SALT LAKE CITY
45 W. 10000 S., Suite 500
Sandy, UT 84070
Phone: 801.255.0529

LAYTON
Phone: 801.547.1100

TOOELE
Phone: 435.843.3590

CEDAR CITY
Phone: 435.865.1453

RICHFIELD
Phone: 435.896.2983

WWW.ENSIGNENG.COM

FOR:
HOLIDAY OIL
3115 WEST 2100 SOUTH
WEST VALLEY CITY, UTAH

CONTACT:
JERRY WAGSTAFF
PHONE: 801-973-7002

MAGNA HOLIDAY OIL

3592 SOUTH 8400 WEST
MAGNA, UTAH

REGISTERED PROFESSIONAL ENGINEER
7699058
BOYD
PREECE
2/9/16
STATE OF UTAH

2016-08-09 SUBMITTAL

UDOT ACCESS PLAN

PROJECT NUMBER 6753	PRINT DATE 2/9/16
DRAWN BY D. COWLEY	CHECKED BY B. PREECE
PROJECT MANAGER C. DUNCAN	

C 2.0

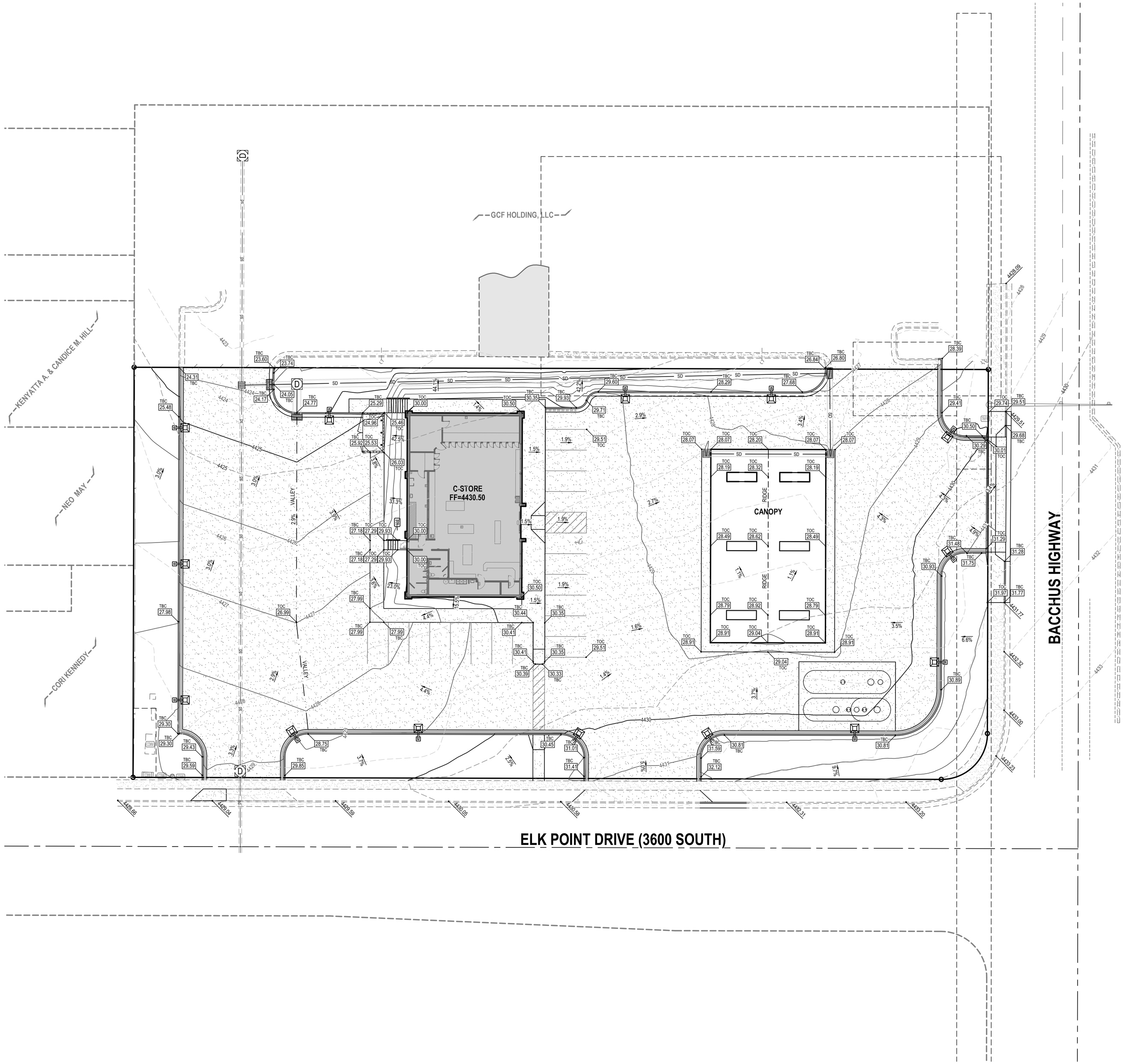

GENERAL NOTES

1. ALL WORK TO COMPLY WITH THE GOVERNING AGENCY'S STANDARDS AND SPECIFICATIONS.
2. ALL IMPROVEMENTS MUST COMPLY WITH ADA STANDARDS AND RECOMMENDATIONS.
3. ALL WORK SHALL COMPLY WITH THE RECOMMENDATIONS OF THE GEOTECHNICAL ENGINEER POSSIBLY INCLUDING, BUT NOT LIMITED TO, REMOVAL OF UNCONSOLIDATED FILL, ORGANICS, AND DEBRIS, PLACEMENT OF SUBSURFACE DRAIN LINES AND GEOTEXTILE, AND OVEREXCAVATION OF UNSUITABLE BEARING MATERIALS AND PLACEMENT OF ACCEPTABLE FILL MATERIAL.
4. THE CONTRACTOR SHALL BECOME FAMILIAR WITH THE EXISTING SOIL CONDITIONS.
5. ELEVATIONS HAVE BEEN TRUNCATED FOR CLARITY. XX.XX REPRESENTS AN ELEVATION OF 48XX.XX ON THESE PLANS.
6. LANDSCAPED AREAS REQUIRE SUBGRADE TO BE MAINTAINED AT A SPECIFIC ELEVATION BELOW FINISHED GRADE AND REQUIRE SUBGRADE TO BE PROPERLY PREPARED AND SCARIFIED. SEE LANDSCAPE PLANS FOR ADDITIONAL INFORMATION.
7. SLOPE ALL LANDSCAPED AREAS AWAY FROM BUILDING FOUNDATIONS TOWARD CURB AND GUTTER OR STORM DRAIN INLETS.
8. THE CONTRACTOR SHALL ADJUST TO GRADE ALL EXISTING UTILITIES AS NEEDED PER LOCAL GOVERNING AGENCY'S STANDARDS AND SPECIFICATIONS.
9. NOTIFY ENGINEER OF ANY DISCREPANCIES IN DESIGN OR STAKING BEFORE PLACING CONCRETE, ASPHALT, OR STORM DRAIN STRUCTURES OR PIPES.
10. THE CONTRACTOR IS TO PROTECT AND PRESERVE ALL EXISTING IMPROVEMENTS, UTILITIES, AND SIGNS, ETC. UNLESS OTHERWISE NOTED ON THESE PLANS.

ENSIGN
THE STANDARD IN ENGINEERING

SALT LAKE CITY
45 W. 10000 S., Suite 500
Sandy, UT 84070
Phone: 801.255.0529

LAYTON
Phone: 801.547.1100

TOOELE
Phone: 435.843.3590

CEDAR CITY
Phone: 435.865.1453

RICHFIELD
Phone: 435.896.2983

WWW.ENSIGNENG.COM

FOR:
HOLIDAY OIL
3115 WEST 2100 SOUTH
WEST VALLEY CITY, UTAH

CONTACT:
JERRY WAGSTAFF
PHONE: 801-973-7002

MAGNA HOLIDAY OIL

3592 SOUTH 8400 WEST
MAGNA, UTAH

LICENSED PROFESSIONAL ENGINEER
7699058
BOYD
PREECE
2/9/16
STATE OF UTAH

2016-08-09 SUBMITTAL

PRELIMINARY GRADING PLAN

NORTH

HORIZONTAL GRAPHIC SCALE
20 0 10 20 40
(IN FEET)
HORZ: 1 inch = 20 ft.

PROJECT NUMBER 6753	PRINT DATE 2/9/16
DRAWN BY D. COWLEY	CHECKED BY B. PREECE
PROJECT MANAGER C. DUNCAN	

C 3.0

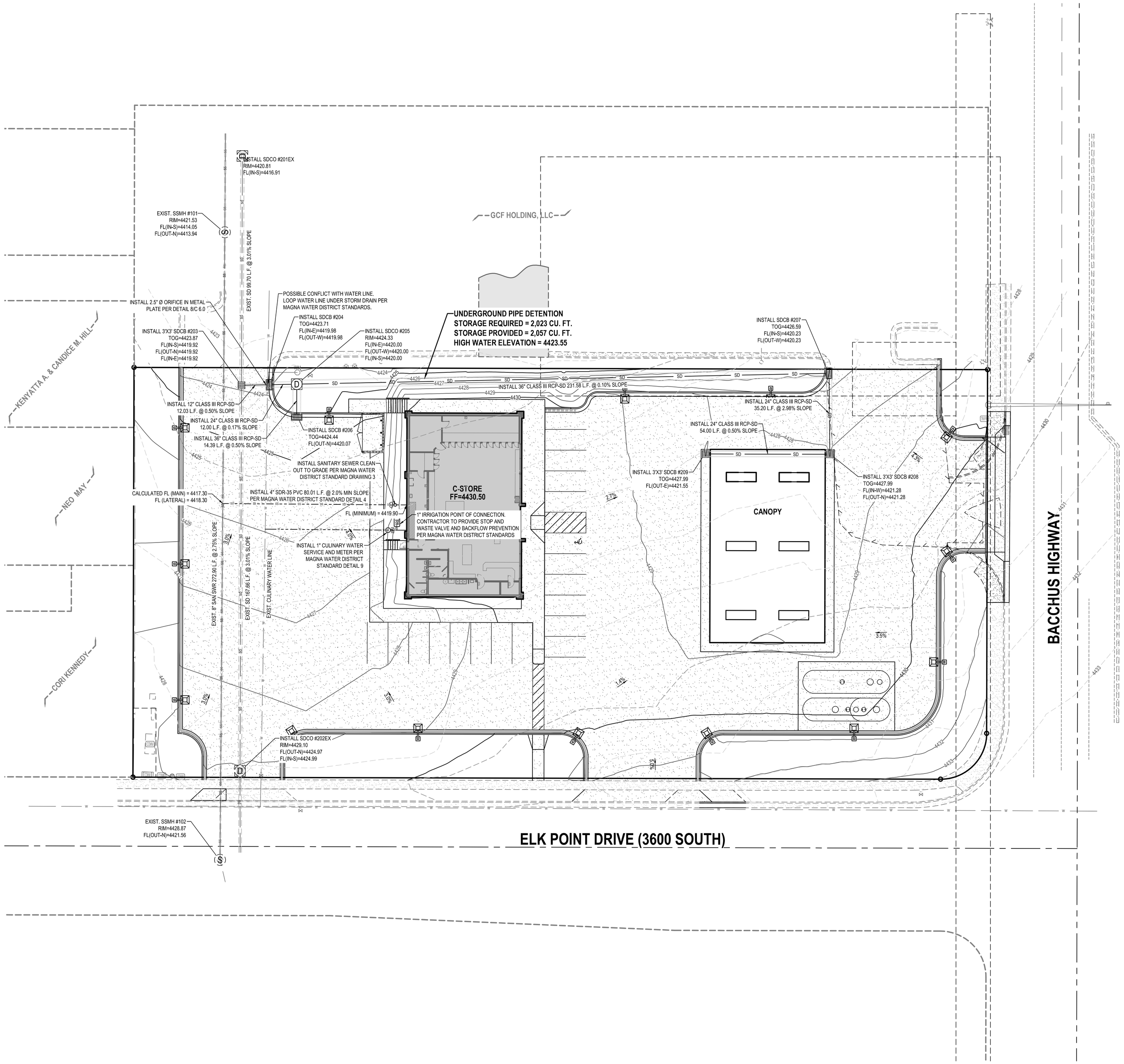

GENERAL NOTES

1. ALL WORK TO COMPLY WITH THE GOVERNING AGENCY'S STANDARDS AND SPECIFICATIONS.
2. EXISTING UNDERGROUND UTILITIES AND IMPROVEMENTS ARE SHOWN IN THEIR APPROXIMATE LOCATIONS BASED UPON RECORD INFORMATION AVAILABLE AT THE TIME OF PREPARATION OF THESE PLANS. LOCATIONS MAY NOT HAVE BEEN VERIFIED IN THE FIELD AND NO GUARANTEE IS MADE AS TO THE ACCURACY OR COMPLETENESS OF THE INFORMATION SHOWN. IT SHALL BE THE RESPONSIBILITY OF THE CONTRACTOR TO DETERMINE THE EXISTENCE AND LOCATION OF THE UTILITIES SHOWN ON THESE PLANS OR INDICATED IN THE FIELD BY LOCATING SERVICES. ANY ADDITIONAL COSTS INCURRED AS A RESULT OF THE CONTRACTOR'S FAILURE TO VERIFY THE LOCATIONS OF EXISTING UTILITIES PRIOR TO THE BEGINNING OF CONSTRUCTION IN THEIR VICINITY SHALL BE BORNE BY THE CONTRACTOR AND ASSUMED INCLUDED IN THE CONTRACT. THE CONTRACTOR IS TO VERIFY ALL CONNECTION POINTS WITH THE EXISTING UTILITIES. THE CONTRACTOR IS RESPONSIBLE FOR ANY DAMAGE CAUSED TO THE EXISTING UTILITIES AND UTILITY STRUCTURES THAT ARE TO REMAIN. IF CONFLICTS WITH EXISTING UTILITIES OCCUR, THE CONTRACTOR SHALL NOTIFY THE ENGINEER PRIOR TO CONSTRUCTION TO DETERMINE IF ANY FIELD ADJUSTMENTS SHOULD BE MADE.
3. ALL STORM DRAIN INFRASTRUCTURE TO BE INSTALLED PER APWA OR SALT LAKE COUNTY STANDARD PLANS AND SPECIFICATIONS.
4. ENSURE MINIMUM COVER OVER ALL STORM DRAIN PIPES PER MANUFACTURER'S RECOMMENDATIONS. NOTIFY ENGINEER IF MINIMUM COVER CANNOT BE ATTAINED.
5. THE CONTRACTOR SHALL ADJUST TO GRADE ALL EXISTING UTILITIES AS NEEDED PER LOCAL GOVERNING AGENCY'S STANDARDS AND SPECIFICATIONS.
6. NOTIFY ENGINEER OF ANY DISCREPANCIES IN DESIGN OR STAKING BEFORE PLACING CONCRETE, ASPHALT, OR STORM DRAIN STRUCTURES OR PIPES.
7. THE CONTRACTOR IS TO PROTECT AND PRESERVE ALL EXISTING IMPROVEMENTS, UTILITIES, AND SIGNS, ETC. UNLESS OTHERWISE NOTED ON THESE PLANS.
8. ALL SANITARY SEWER INFRASTRUCTURE TO BE INSTALLED PER MAGNA WATER DISTRICT STANDARD PLANS AND SPECIFICATIONS.
9. ALL WATER INFRASTRUCTURE TO BE INSTALLED PER MAGNA WATER DISTRICT STANDARD PLANS AND SPECIFICATIONS.
10. DEFLECT OR LOOP ALL WATERLINES TO AVOID CONFLICTS WITH OTHER UTILITIES PER GOVERNING AGENCY'S STANDARDS AND SPECIFICATIONS.
11. PROJECT SHALL COMPLY WITH ALL UTAH DIVISION OF DRINKING WATER RULES AND REGULATIONS INCLUDING, BUT NOT LIMITED TO, THOSE PERTAINING TO BACKFLOW PROTECTION AND CROSS CONNECTION PREVENTION.
12. THE CONTRACTOR IS TO COORDINATE ALL UTILITIES WITH MECHANICAL/PLUMBING PLANS.

ENSIGN engineering . planning . surveying

Project :	Holiday Oil Magna	Project No. :	6753
By :	D. Cowley	Checked By :	B. Preece
Date :	3-Feb-2016	Sheet :	1 of 1

DRAINAGE CALCULATION

Area Calculations			Area Runoff Coefficients	
Hardscaped Area (Ap):	1.18	acres	Cp :	0.85
LANDSCAPE AREA (Al):	0.33	acres	Cl :	0.15
TOTAL AREA (A):	1.52	acres	WEIGHTED C:	0.70

Runoff Calculations

				Allowable Runoff	0.2	cfs/ac
				Total Allowable Runoff	0.303	cfs
Time (min)	CA (Acres)	Intensity (in/hr)	Time (sec)	Cumulative Runoff (ft³)	Allowed Runoff (ft³)	Storage (ft³)
15	1.06	2.04	900	1,938	273	1,665
30	1.06	1.34	1,800	2,545	546	1,999
60	1.06	0.82	3,600	3,115	1,092	2,023
360	1.06	0.22	21,600	4,939	6,552	-1,613
720	1.06	0.15	43,200	6,648	13,104	-6,455
1440	1.06	0.09	86,400	7,902	26,208	-18,305
NOTE: 10 Year Storm					STORAGE REQUIRED :	2,023
					PIPE STORAGE PROVIDED :	2,057

PIPE SIZE	PIPE LENGTH	VOLUME
24"	101	318
36"	246	1739
	TOTAL	2057

Outlet Control

Q through orifice: 0.303 cfs

Gate Parameters		Gate Size		Pipe Parameters	
C =	0.6	Area (in²) =	4.80 = Q/(C(2gh)^0.5)	TYPE OF PIPE:	Concrete
g (ft/s²) =	32.2	Diameter (in) =	2.5	ROUGHNESS (n) =	0.013
HWM =	4,423.6			PIPE DIA. (d) =	12
FL @ Gate =	4,420.0			%SLOPE (s) =	0.50%
h (ft) =	3.6			Q allow =	2.53
				Unity Check of Q (cfs)	ok

PROVIDE:

12" Dia. Concrete Pipe With: 2.5" Diameter Orifice in Metal Headgate

(Orifice coefficient is taken from: McQuen, Richard / Hydrologic Design Methods /co 1998 p.424)

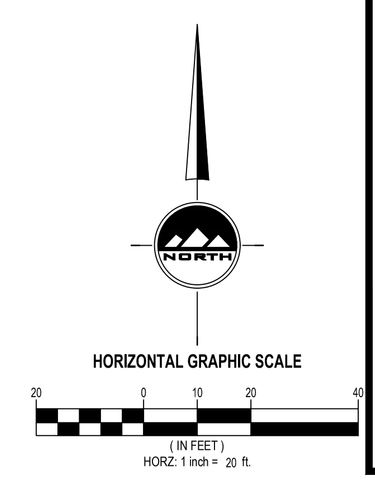

ENSIGN
THE STANDARD IN ENGINEERING

SALT LAKE CITY
45 W. 10000 S., Suite 500
Sandy, UT 84070
Phone: 801.255.0529

LAYTON
Phone: 801.547.1100

TOOELE
Phone: 435.843.3590

CEDAR CITY
Phone: 435.865.1453

RICHFIELD
Phone: 435.896.2983

WWW.ENSIGNENG.COM

FOR:
HOLIDAY OIL
3115 WEST 2100 SOUTH
WEST VALLEY CITY, UTAH

CONTACT:
JERRY WAGSTAFF
PHONE: 801-973-7002

MAGNA HOLIDAY OIL

3592 SOUTH 8400 WEST
MAGNA, UTAH

REGISTERED PROFESSIONAL ENGINEER
7699058
BOYD
PREECE
2/9/16
STATE OF UTAH

2016-08-09 SUBMITTAL

PRELIMINARY DRAINAGE PLAN

PROJECT NUMBER 6753	PRINT DATE 2/9/16
DRAWN BY D. COWLEY	CHECKED BY B. PREECE
PROJECT MANAGER C. DUNCAN	

C 4.0

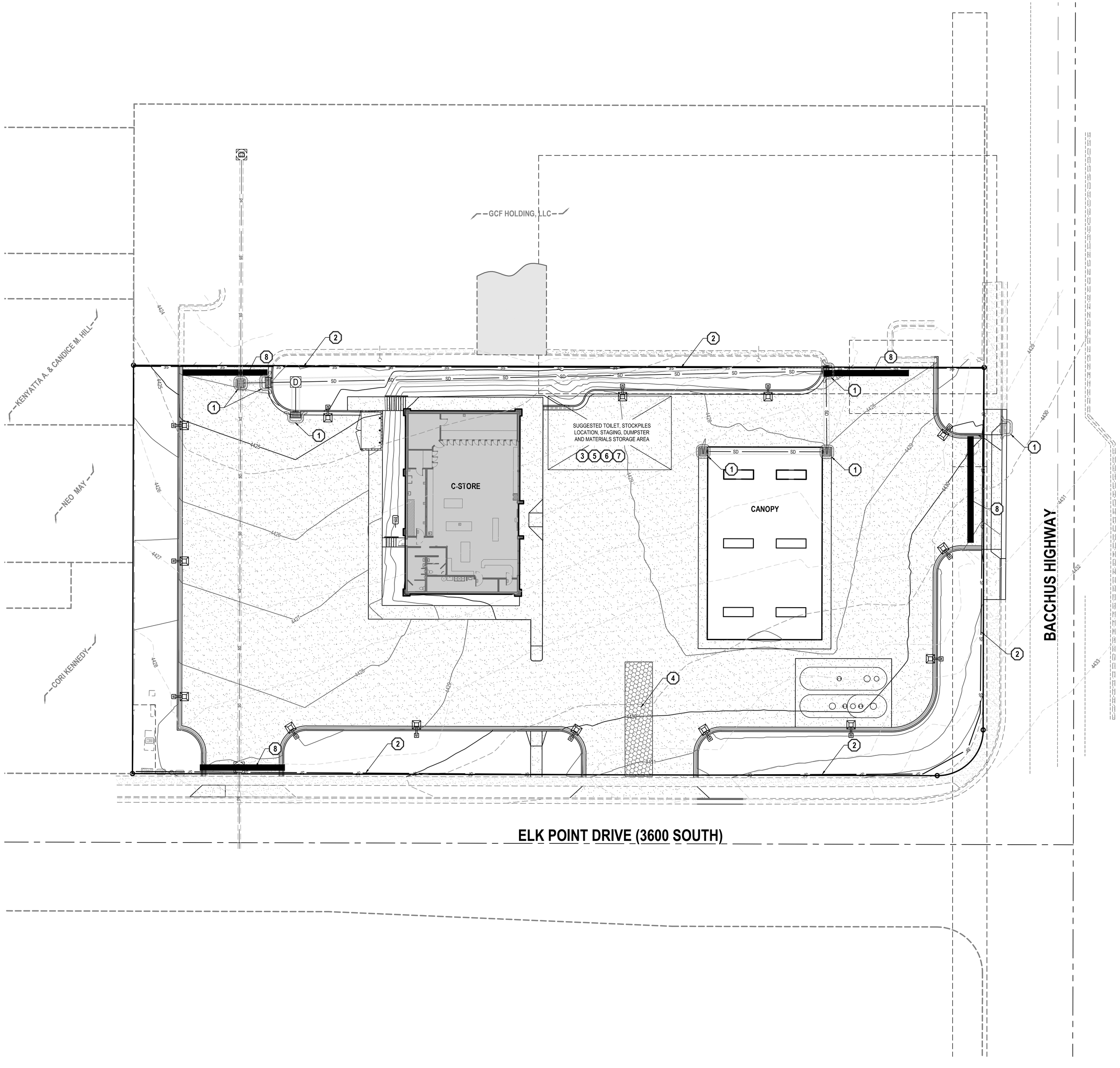

GENERAL NOTES

1. THIS PLAN IS DESIGNED AS A FIRST APPRAISAL OF NECESSARY MEANS TO PROTECT THE WATERS OF THE STATE FROM POTENTIAL POLLUTION. IT IS THE RESPONSIBILITY OF THE OWNER/OPERATOR TO ADD WARRANTED BEST MANAGEMENT PRACTICES (BMP'S) AS NECESSARY, MODIFY THOSE SHOWN AS APPROPRIATE, AND DELETE FROM THE PROJECT THOSE FOUND TO BE UNNECESSARY. FEDERAL AND STATE LAW ALLOWS THESE UPDATES TO BE MADE BY THE OWNER/OPERATOR ONSITE AND RECORDED BY THE OWNER/OPERATOR ON THE COPY OF THE SWPPP KEPT ONSITE.
2. DISTURBED LAND SHALL BE KEPT TO A MINIMUM. STABILIZATION MEASURES SHALL BE INITIATED AS SOON AS PRACTICABLE IN PORTIONS OF THE SITE WHERE CONSTRUCTION ACTIVITIES HAVE TEMPORARILY OR PERMANENTLY CEASED, BUT IN NO CASE MORE THAN 14 DAYS AFTER THE CONSTRUCTION ACTIVITY IN THAT PORTION OF THE SITE HAS TEMPORARILY OR PERMANENTLY CEASED. HOWEVER, WHERE CONSTRUCTION ACTIVITY ON A PORTION OF THE SITE IS TEMPORARILY CEASED, AND EARTH DISTURBING ACTIVITIES WILL BE RESUMED WITHIN 21 DAYS, TEMPORARY STABILIZATION MEASURES DO NOT HAVE TO BE INITIATED ON THAT PORTION OF THE SITE.
3. RESEED DISTURBED LAND WITH NATIVE GRASS MIXTURE WITHIN 14 CALENDAR DAYS OF ACHIEVEMENT OF FINISH GRADE TO STABILIZE SOILS IF LAND IS NOT TO BE RE-WORKED WITHIN 14 CALENDAR DAYS OF THE CESSATION OF CONSTRUCTION ACTIVITIES AT THAT LOCATION.
4. DETAILS SHOWN ARE TO BE EMPLOYED TO PROTECT RUNOFF AS APPROPRIATE DURING CONSTRUCTION. NOT ALL DETAILS ARE NECESSARY AT ALL PHASES OF THE PROJECT. IT SHALL BE THE RESPONSIBILITY OF THE OWNER/OPERATOR TO USE APPROPRIATE BEST MANAGEMENT PRACTICES AT THE APPROPRIATE PHASE OF CONSTRUCTION. SEE SWPPP FOR BMP IMPLEMENTATION SCHEDULE.
5. VARIOUS BEST MANAGEMENT PRACTICES HAVE BEEN SHOWN ON THE PLANS AT SUGGESTED LOCATIONS. THE CONTRACTOR MAY MOVE AND RECONFIGURE THESE BMP'S TO OTHER LOCATIONS IF PREFERRED, PROVIDED THE INTENT OF THE DESIGN IS PRESERVED.
6. NOT ALL POSSIBLE BMP'S HAVE BEEN SHOWN. THE CONTRACTOR IS RESPONSIBLE TO APPLY CORRECT MEASURES TO PREVENT THE POLLUTION OF STORM WATER PER PROJECT SWPPP.
7. A UPDES (UTAH POLLUTANT DISCHARGE ELIMINATION SYSTEM) PERMIT IS REQUIRED FOR ALL CONSTRUCTION ACTIVITIES 1 ACRE OR MORE.

SCOPE OF WORK:

PROVIDE, INSTALL AND/OR CONSTRUCT THE FOLLOWING PER THE SPECIFICATIONS GIVEN OR REFERENCED, THE DETAILS NOTED, AND/OR AS SHOWN ON THE CONSTRUCTION DRAWINGS:

1. INLET PROTECTION PER DETAIL 9/C 6.0.
2. TEMPORARY CONSTRUCTION FENCE OR SILT FENCE PER DETAIL 10/C 6.0.
3. PORTABLE TOILET PER DETAIL 11/C 6.0.
4. VEHICLE WASHDOWN AND STABILIZED CONSTRUCTION ENTRANCE PER DETAIL 12/C 6.0.
5. CONCRETE WASTE MANAGEMENT PER DETAIL 13/C 6.0.
6. SUGGESTED TEMPORARY CONSTRUCTION SITE PARKING, STAGING, DUMPSTER, AND MATERIAL STORAGE AREA.
7. SUGGESTED STOCKPILE AREA.
8. BARRICADE ENTRANCE OR PROVIDE STABILIZED CONSTRUCTION ENTRANCE.

REVISION SCHEDULE

NUMBER	DATE	AUTHOR	COMPANY REPRESENTATIVE SIGNATURE
1			
2			
3			
4			
5			
6			
7			
8			
9			
10			
11			
12			

NORTH

HORIZONTAL GRAPHIC SCALE

20 0 10 20 40

(IN FEET)
HORZ: 1 inch = 20 ft.

ENSIGN
THE STANDARD IN ENGINEERING

SALT LAKE CITY
45 W. 10000 S., Suite 500
Sandy, UT 84070
Phone: 801.255.0529

LAYTON
Phone: 801.547.1100

TOOELE
Phone: 435.843.3590

CEDAR CITY
Phone: 435.865.1453

RICHFIELD
Phone: 435.896.2983

WWW.ENSIGNENG.COM

FOR:
HOLIDAY OIL
3115 WEST 2100 SOUTH
WEST VALLEY CITY, UTAH

CONTACT:
JERRY WAGSTAFF
PHONE: 801-973-7002

MAGNA HOLIDAY OIL

3592 SOUTH 8400 WEST
MAGNA, UTAH

LICENSED PROFESSIONAL ENGINEER
7699058
BOYD
PREECE
2/9/16
STATE OF UTAH

2016-08-09 SUBMITTAL

EROSION CONTROL PLAN

PROJECT NUMBER	PRINT DATE
6753	2/9/16
DRAWN BY	CHECKED BY
D. COWLEY	B. PREECE
PROJECT MANAGER	
C. DUNCAN	

C 5.0

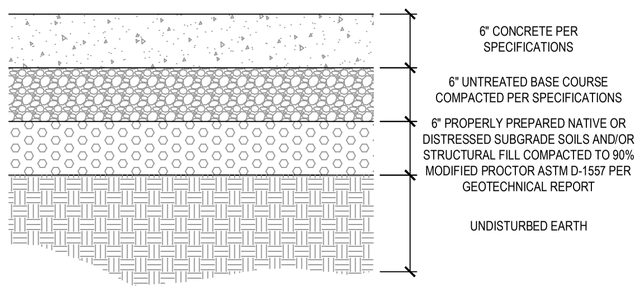

1 CONCRETE PAVEMENT SECTION

SCALE: NONE

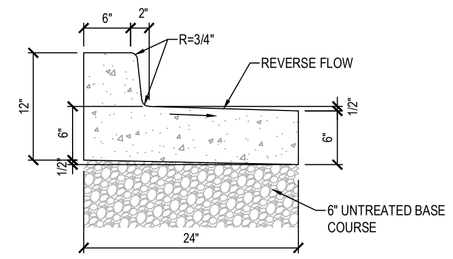

NOTE:

1. CONSTRUCT PER NOTES AND SPECIFICATIONS ASSOCIATED WITH APWA STANDARD PLAN NO. 205.

2 24" REVERSE PAN CURB AND GUTTER

SCALE: NONE

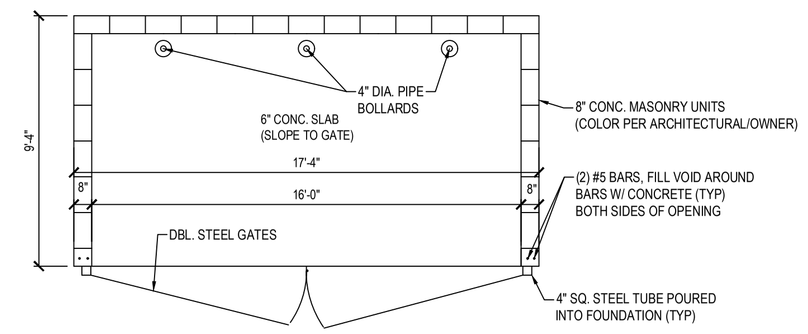

3 DOUBLE TRASH ENCLOSURE

SCALE: NONE

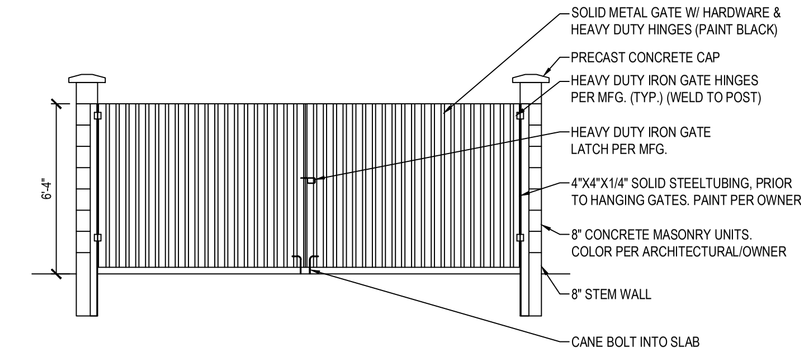

4 DOUBLE TRASH ENCLOSURE ELEVATION

SCALE: NONE

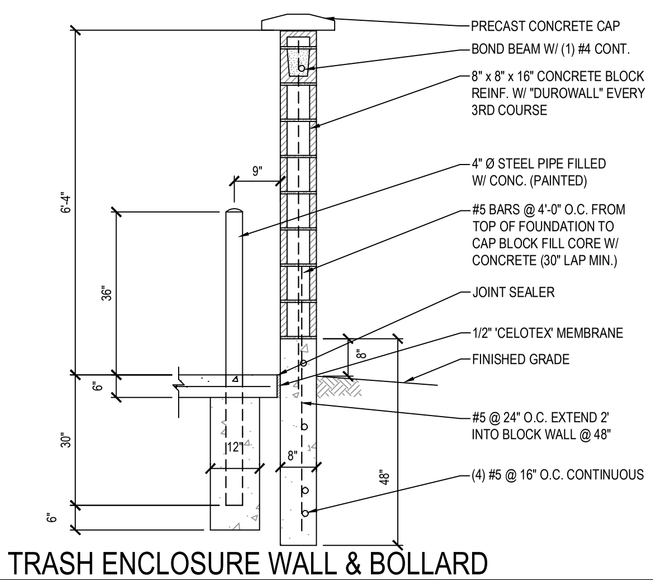

5 TRASH ENCLOSURE WALL & BOLLARD

SCALE: NONE

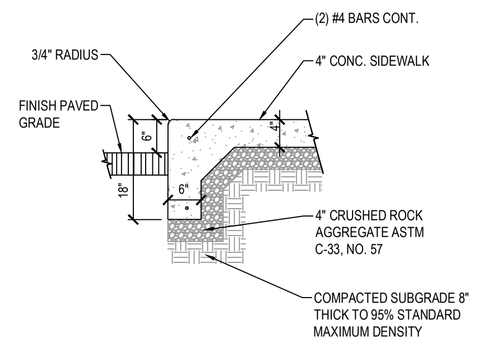

NOTE:

1. CONSTRUCT PER NOTES AND SPECIFICATIONS ASSOCIATED WITH APWA STANDARD PLAN NO. 231.

6 MONOLITHIC CURB

SCALE: NONE

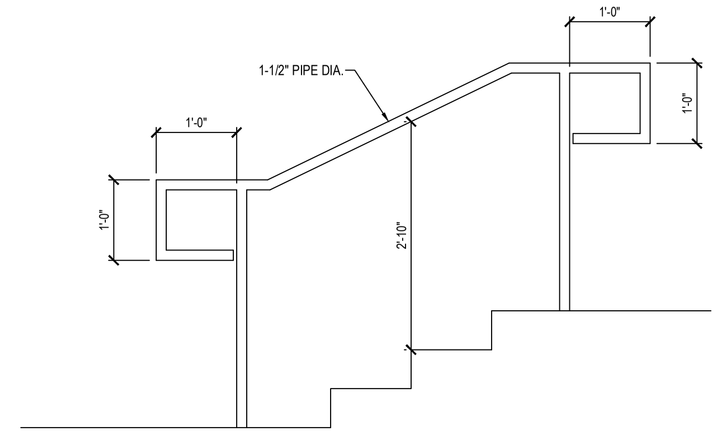

7 TYPICAL HANDRAIL

SCALE: NONE

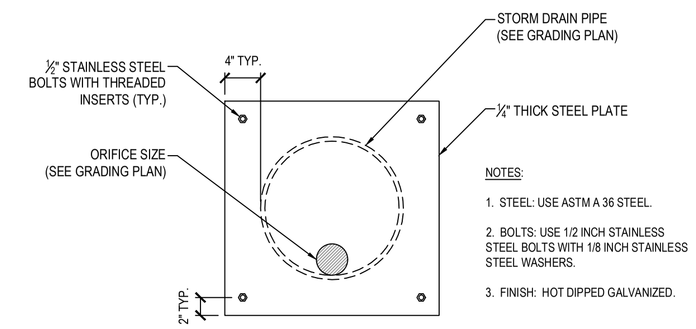

NOTES:

1. STEEL: USE ASTM A 36 STEEL.
2. BOLTS: USE 1/2 INCH STAINLESS STEEL BOLTS WITH 1/8 INCH STAINLESS STEEL WASHERS.
3. FINISH: HOT DIPPED GALVANIZED.

8 ORIFICE PLATE

SCALE: NONE

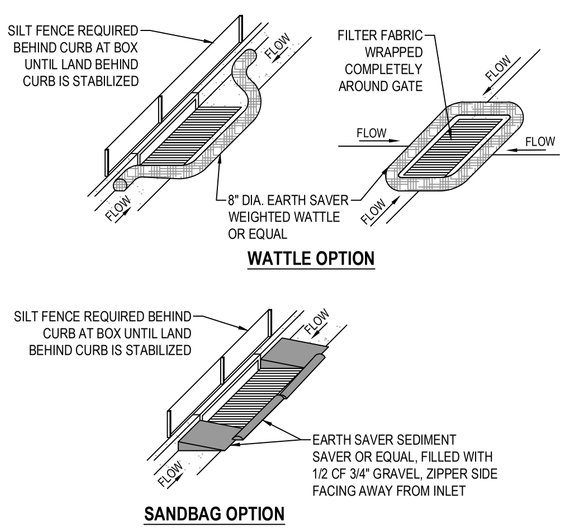

NOTES:

1. PLACE WATTLES OR GRAVEL BAGS TIGHT AGAINST CURB TO PREVENT SEDIMENT-LADEN WATER FROM GETTING BETWEEN CURB AND WATTLE/BAG.
2. PLACE WATTLES OR GRAVEL BAGS SUCH THAT FLOW DOES NOT OVERTOP CURB OR ROAD CENTERLINE.
3. INSPECT INLET PROTECTION AFTER EVERY LARGE STORM EVENT AND AT LEAST BI-WEEKLY, OR PER SWPPP REQUIREMENTS, WHICHEVER IS MORE STRINGENT, TO ENSURE THAT SEDIMENT CONTROL IS MEETING ITS DESIGN INTENT. MAINTAIN AND/OR REPLACE AS NEEDED.
4. REMOVE SEDIMENT ACCUMULATED WHEN IT REACHES 50% OF GRAVEL BAG OR WATTLE HEIGHT.
5. CONTRACTOR MAY SUBMIT AN ALTERNATIVE METHOD OF INLET PROTECTION. THE ALTERNATIVE METHOD SHALL BE APPROVED BY THE CITY INSPECTOR AND THE ENGINEER OF RECORD.
6. BEFORE PLACEMENT OF CURB, STABILIZATION OF LAND BEHIND CURB, AND/OR PAVING, MAINTAIN TOP OF INLET AT 6" ABOVE GRADE, AND SURROUND WITH SILT FENCE FOR SEDIMENTATION AROUND BOX. MAINTAIN SILT FENCE BEHIND BOX UNTIL LAND BEHIND CURB IS STABILIZED.

9 SAG INLET PROTECTION

SCALE: NONE

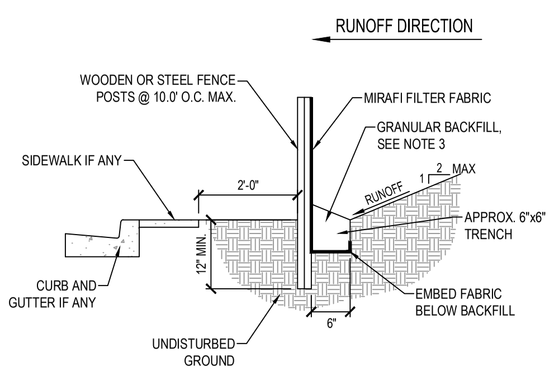

NOTES:

1. EXCAVATE 6"x6" TRENCH ALONG LIMITS OF DISTURBANCE AS SHOWN ON CONSTRUCTION DRAWINGS.
2. POSTS SHALL BE POSITIONED ON DOWNSTREAM SIDE OF FENCE.
3. LAY TOE-IN FABRIC FLAP IN BOTTOM OF TRENCH. BACKFILL TRENCH WITH FREE DRAINING GRANULAR MATERIAL. COMPACT TRENCH TO SATISFACTION OF THE ENGINEER OF RECORD.
4. SILT FENCE GEOTEXTILE SHALL MEET AASHTO M288-92 REQUIREMENTS.
5. REMOVE & DISPOSE OF SEDIMENT WHEN ACCUMULATION IS 50% OF EXPOSED FENCE HEIGHT.
6. 10' MAX. SPACING BETWEEN STAKES.
7. SILT FENCES SHALL BE INSTALLED ALONG CONTOURS, NOT UP AND DOWN SLOPES, WITH 10' OVERLAP AT BREAKS.

10 TEMPORARY SILT FENCE

SCALE: NONE

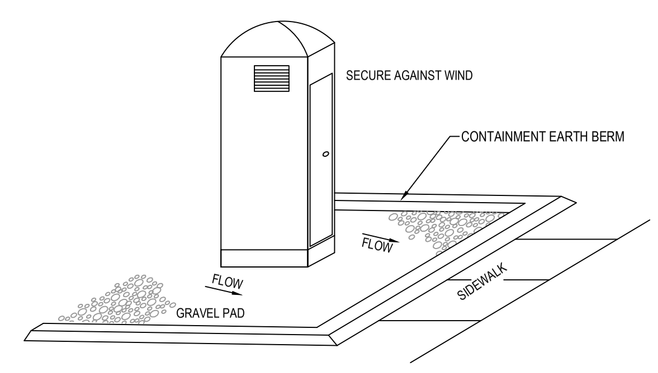

11 PORTABLE TOILET

SCALE: NONE

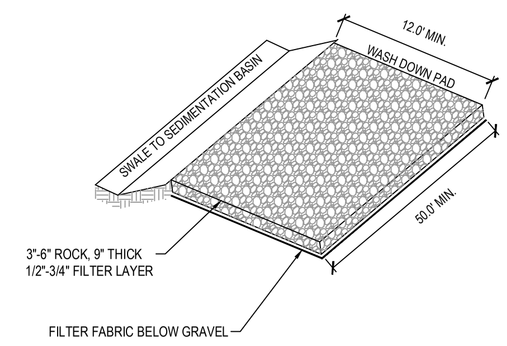

NOTE:

1. PLACE SIGN ADJACENT TO ENTRANCE " CONSTRUCTION TRAFFIC ONLY - ALL CONSTRUCTION TRAFFIC SHALL ENTER AND EXIT SITE AT THIS LOCATION"

12 STABILIZED CONSTRUCTION ENTRANCE

SCALE: NONE

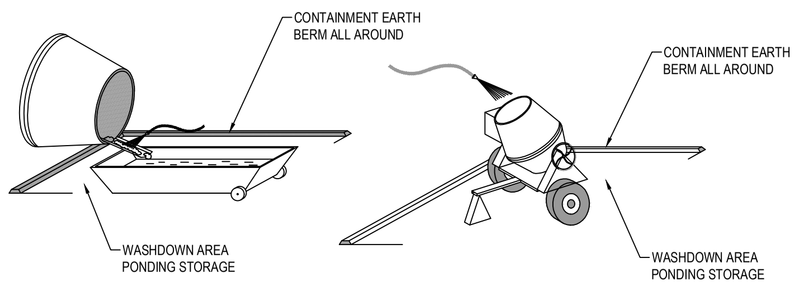

OPTION A **OPTION B**

13 CONCRETE WASTE MANAGEMENT

SCALE: NONE

ENSIGN
THE STANDARD IN ENGINEERING

SALT LAKE CITY
45 W. 10000 S., Suite 500
Sandy, UT 84070
Phone: 801.255.0529

LAYTON
Phone: 801.547.1100

TOOELE
Phone: 435.843.3590

CEDAR CITY
Phone: 435.865.1453

RICHFIELD
Phone: 435.896.2983

WWW.ENSIGNENG.COM

FOR:
HOLIDAY OIL
3115 WEST 2100 SOUTH
WEST VALLEY CITY, UTAH

CONTACT:
JERRY WAGSTAFF
PHONE: 801-973-7002

MAGNA HOLIDAY OIL

3592 SOUTH 8400 WEST
MAGNA, UTAH

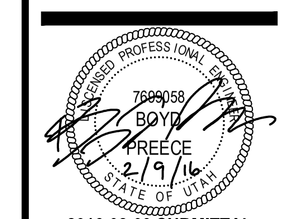

2016-08-09 SUBMITTAL

DETAILS

PROJECT NUMBER	PRINT DATE
6753	2/9/16
DRAWN BY	CHECKED BY
D. COWLEY	B. PREECE
PROJECT MANAGER	
C. DUNCAN	

C 6.0

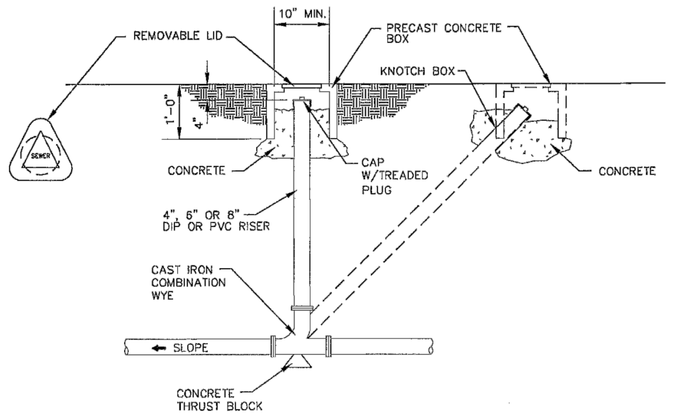

A SEWER CLEANOUT
N.T.S.

MAGNA WATER DISTRICT 2711 SOUTH 8600 WEST P.O.BOX 303 MAGNA, UTAH 84044-303 (801) 250-2118	SEWER CLEANOUT	STANDARD DETAIL 3	REVISED ARP 2011

NOTES:
CLEANOUTS WILL BE REQUIRED WHERE SERVICE LATERALS EXCEED 50' FROM
1. BUILDING TO PROPERTY LINE AND WHERE DEEMED NECESSARY BY THE INSPECTOR
2. CONNECTIONS TO EXISTING MAINS SHALL BE NOSE ON TYPE MACHINE CORE DRILLED AND GASKETED.
3. ALL NO-HUB COUPLERS WILL BE FERNCO TYPE.
4. PREFERRED ARRANGEMENT: CENTERLINE OF WYE BRANCH TO BE PLACED IN UPPER THIRD OF MAIN.
5. CONCRETE THRUST BLOCKING ON ALL BENDS REQUIRED.

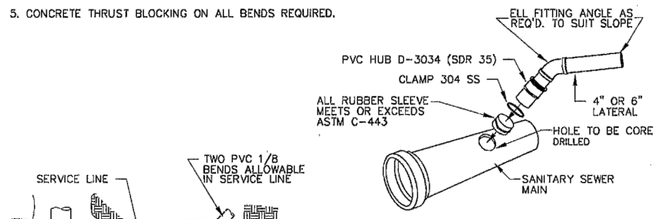

NOSE ON DETAIL

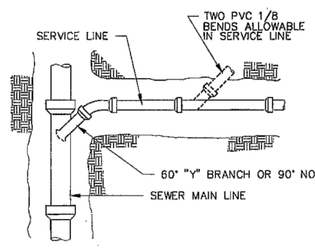

PLAN

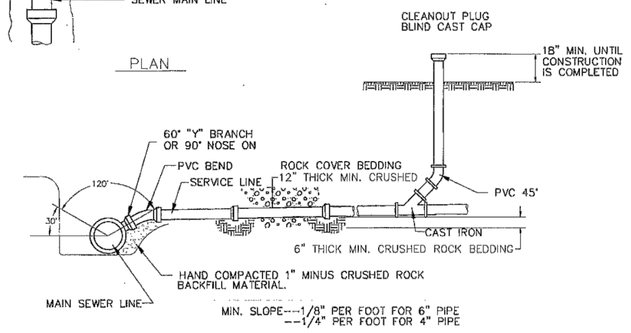

ELEVATION

MAGNA WATER DISTRICT 2711 SOUTH 8600 WEST P.O.BOX 303 MAGNA, UTAH 84044-303 (801) 250-2118	SEWER SERVICE LATERAL	STANDARD DETAIL 4	REVISED APR 2011

RELOCATED METERS

EXIST. LID, BOX, METER AND SETTER TO BE RELOCATED TO LOCATIONS SHOWN ON PLANS. CONNECTION TO THE SUPPLY MAIN, CORP. STOP, AND SERVICE PIPING FROM THE MAIN TO THE METER, AND FROM THE METER TO THE OWNERS PIPING TO BE PROVIDED BY THE CONTRACTOR MAKING SERVICE COMPLETE AND OPERATIONAL. AT THE OPTION OF THE DISTRICT NEW COMPONENTS OF THE LID, BOX, METER OR SETTER MAY BE PROVIDED, IN WHICH THE NEW COMPONENTS SHALL BE USED AS PART OF THE RELOCATION CONNECTION.

NEW METERS

NEW METERS SHALL BE INSTALLED AT THE LOCATIONS SHOWN ON THE PLANS. THE LID, BOX, METER, AND SETTER WILL BE PROVIDED BY THE CONTRACTOR. CONNECTION TO THE SUPPLY MAIN, CORP. STOP, AND SERVICE PIPING FROM THE MAIN TO THE METER AND FROM THE METER TO 10'-0" ONTO THE OWNERS PROPERTY SHALL BE PROVIDED BY THE CONTRACTOR.

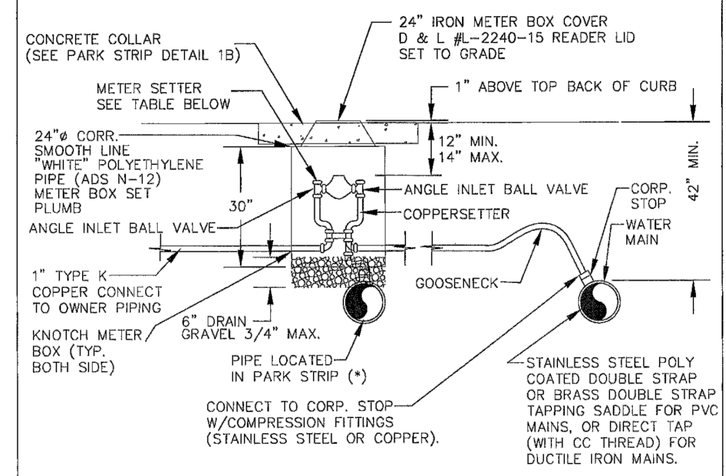

WATER METER SETTER				
APPLICATION	METER SIZE	DUAL CHECK	FORD MODEL # LONG SIDE	FORD MODEL # SHORT SIDE
RESIDENTIAL	1" x 1"	YES	VBHC-74-18W	VBHC-84-W
COMMERCIAL	1" x 1"	–	VB-74-21W	VB-84-W

MAGNA WATER DISTRICT 2711 SOUTH 8600 WEST P.O.BOX 303 MAGNA, UTAH 84044-303 (801) 250-2118	1" WATER METER SERVICE	STANDARD DETAIL 9	REVISED APR 2011

ENSIGN
THE STANDARD IN ENGINEERING

SALT LAKE CITY
45 W. 10000 S., Suite 500
Sandy, UT 84070
Phone: 801.255.0529

LAYTON
Phone: 801.547.1100

TOOELE
Phone: 435.843.3590

CEDAR CITY
Phone: 435.865.1453

RICHFIELD
Phone: 435.896.2983

WWW.ENSIGNENG.COM

FOR:
HOLIDAY OIL
3115 WEST 2100 SOUTH
WEST VALLEY CITY, UTAH

CONTACT:
JERRY WAGSTAFF
PHONE: 801-973-7002

MAGNA HOLIDAY OIL

3592 SOUTH 8400 WEST
MAGNA, UTAH

LICENSED PROFESSIONAL ENGINEER
7699058
BOYD
PREECE
2/9/16
STATE OF UTAH

2016-08-09 SUBMITTAL

DETAILS

PROJECT NUMBER 6753	PRINT DATE 2/9/16
DRAWN BY D. COWLEY	CHECKED BY B. PREECE
PROJECT MANAGER C. DUNCAN	

C 6.1

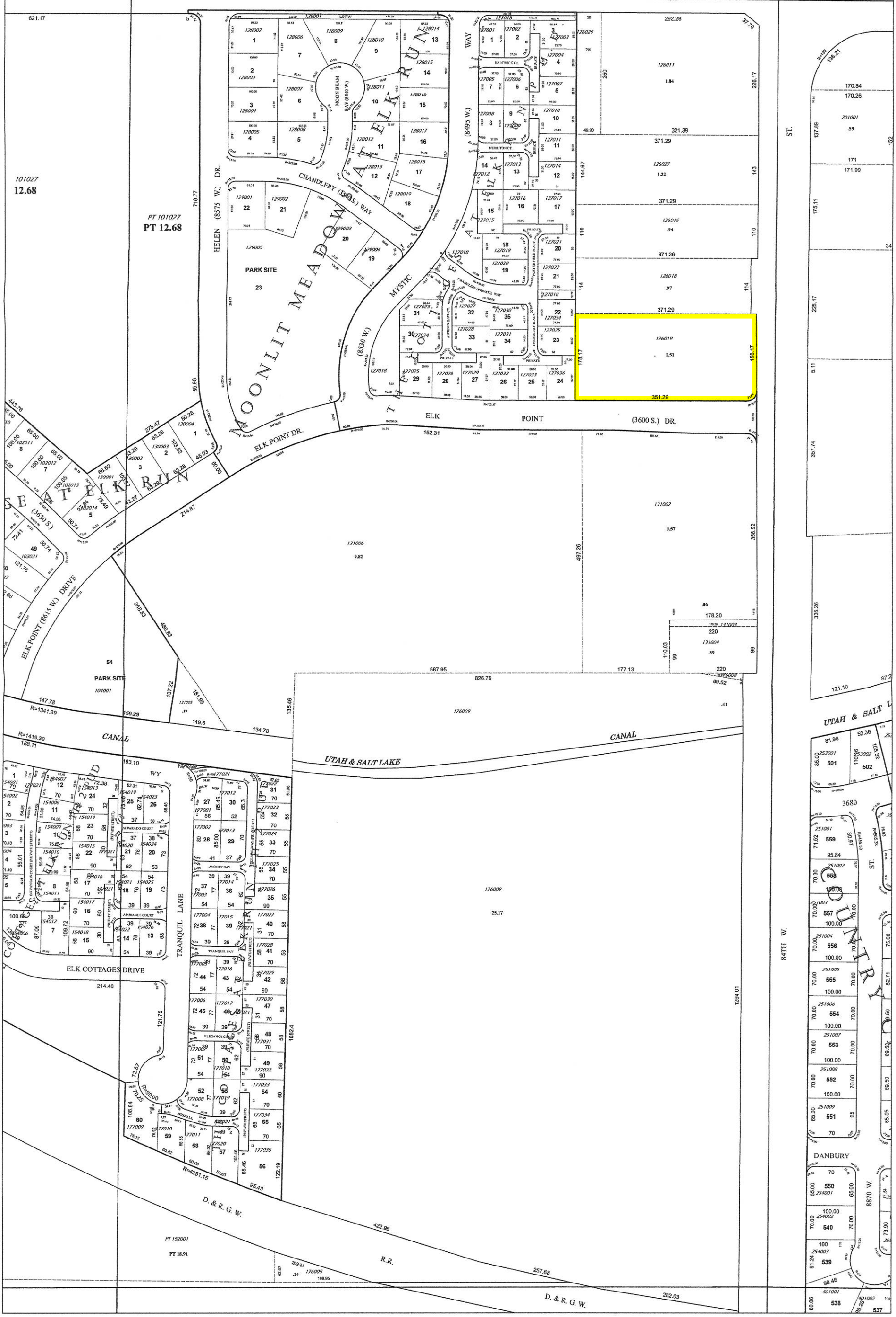

Prepared and published by
Salt Lake County Recorder
Gary Ott
2001 S. State Street #N1600
Salt Lake City, Utah 84190
801-468-3391
http://slcorecorder.siredocs.com/

E 1/2 NW 1/4 Sec 32 T1S R2W

SALT LAKE COUNTY, UTAH

Thursday, September 16, 2010

Scale 1"=100'

0 100' 200'

Feet

14-32-12

Area

Section

Page

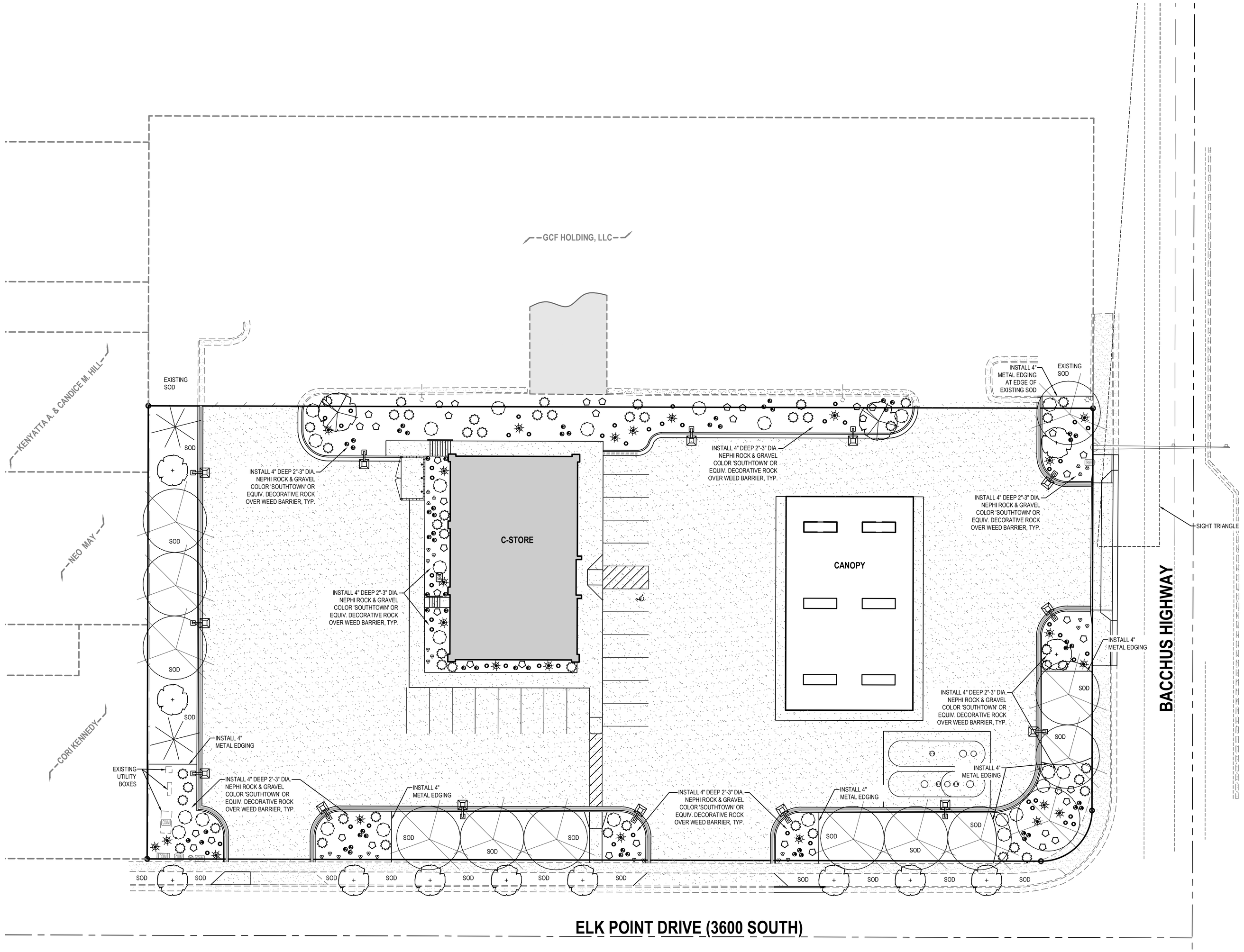

Landscape

Trees

Qty	Symbol	Common Name	Botanical Name	Plant Size
12		Redbud, Western	Cercis occidentalis	2" Cal.
2		Pear, Callery 'Chanticleer'	Pyrus calleryana 'Chanticleer'	2" Cal.
2		Pine, Austrian	Pinus nigra	6' Min.
13		Redbud, Eastern	Cercis canadensis	2" Cal.

Shrubs Under 4 Feet

Qty	Symbol	Common Name	Botanical Name	Plant Size
42		Cinquefoil	Potentilla fruticosa 'Abbotswood'	5 Gallon
24		Pine, Mugo	Pinus mugo 'Compacta'	5 Gallon
51		Currant, Alpine	Ribes alpinum	5 Gallon
25		Winged Euonymus	Euonymus alatus	5 Gallon

Ground Cover-Vines

Qty	Symbol	Common Name	Botanical Name	Plant Size
48		Fountain Grass	Pennisetum setaceum	1 Gallon
61		Blue Oat Grass	Helictotrichon sempervirens	1 Gallon

Annuals-Perennials

Qty	Symbol	Common Name	Botanical Name	Plant Size
27		Daylily	Hemerocallis	1 Gallon

LANDSCAPE AREA = 17,163
TURF AREAS = 7,702 SQ FT
ROCK AREAS = 9,461 SQ FT

STREET TREES = 1 PER 25 FT
ELK POINT DR: 351 FT / 25 = 14 TREES
BACCHUS HIGHWAY: 158 FT / 25 = 6 TREES

LANDSCAPE BUFFER = 1 PER 25 FT
BUFFER LENGTH = 178 FT
TREES REQ. = 178 FT/ 25 = 7 TREES
TREES PROVIDED = 7 TREES

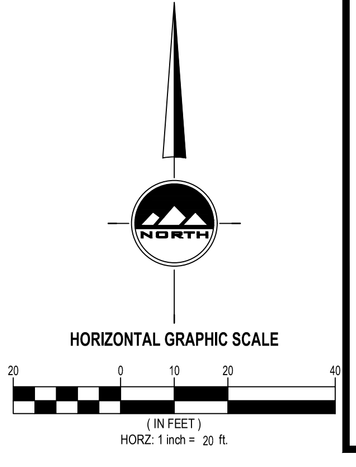

ENSIGN
THE STANDARD IN ENGINEERING

SALT LAKE CITY
45 W. 10000 S., Suite 500
Sandy, UT 84070
Phone: 801.255.0529

LAYTON
Phone: 801.547.1100

TOOELE
Phone: 435.843.3590

CEDAR CITY
Phone: 435.865.1453

RICHFIELD
Phone: 435.896.2983

WWW.ENSIGNENG.COM

FOR:
HOLIDAY OIL
3115 WEST 2100 SOUTH
WEST VALLEY CITY, UTAH

CONTACT:
JERRY WAGSTAFF
PHONE: 801-973-7002

MAGNA HOLIDAY OIL

3592 SOUTH 8400 WEST
MAGNA, UTAH

2016-08-09 SUBMITTAL

LANDSCAPE PLAN

PROJECT NUMBER 6753
PRINT DATE 2/9/16
DRAWN BY
CHECKED BY B. PREECE
PROJECT MANAGER C. DUNCAN

L 1.0

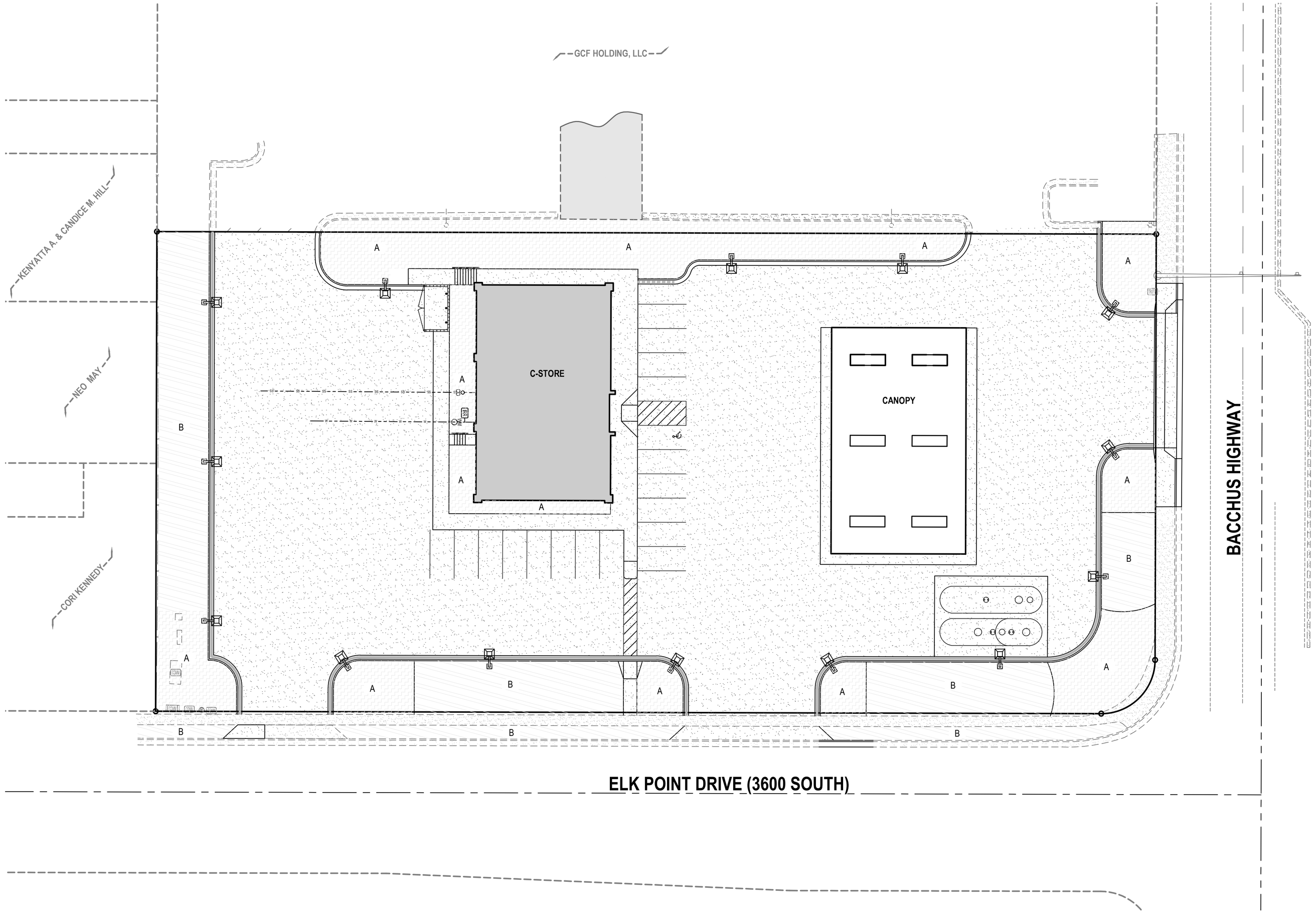

Landscape Water Allowance Calculation:
Total Irrigated Landscaped Area = 17,163 sq ft
Annual ET_0 for Landscaped Area = 31.17
Landscape Water Allowance = 17,163 x 31.17 x 0.62 = 331,682 gallons per growing season

Hydrozones

Symbol	Plant Factor Class	Area (sq ft)	Annual ETO	Plant Factor Value	Conversion to gals/s.f.	Total Gallons Annually
A	Low	9,461	31.17	0.20	0.62	36,568
B	High	7,702	31.17	1.0	0.62	148,844
	Total Area:17,163				Total Gallons:	185,412
Water Allowance: 185,412 ÷ 17,163 = 10.8 gals/s.f./year						

HORIZONTAL GRAPHIC SCALE

20 0 10 20 40

(IN FEET)
HORZ: 1 inch = 20 ft.

ENSIGN
THE STANDARD IN ENGINEERING

SALT LAKE CITY
45 W. 10000 S., Suite 500
Sandy, UT 84070
Phone: 801.255.0529

LAYTON
Phone: 801.547.1100

TOOELE
Phone: 435.843.3590

CEDAR CITY
Phone: 435.865.1453

RICHFIELD
Phone: 435.896.2983

WWW.ENSIGNENG.COM

FOR:
HOLIDAY OIL
3115 WEST 2100 SOUTH
WEST VALLEY CITY, UTAH

CONTACT:
JERRY WAGSTAFF
PHONE: 801-973-7002

MAGNA HOLIDAY OIL

3592 SOUTH 8400 WEST
MAGNA, UTAH

2016-08-09 SUBMITTAL

HYDROZONE PLAN

PROJECT NUMBER 6753
PRINT DATE 2/9/16
DRAWN BY
CHECKED BY B. PREECE
PROJECT MANAGER C. DUNCAN

L 1.1

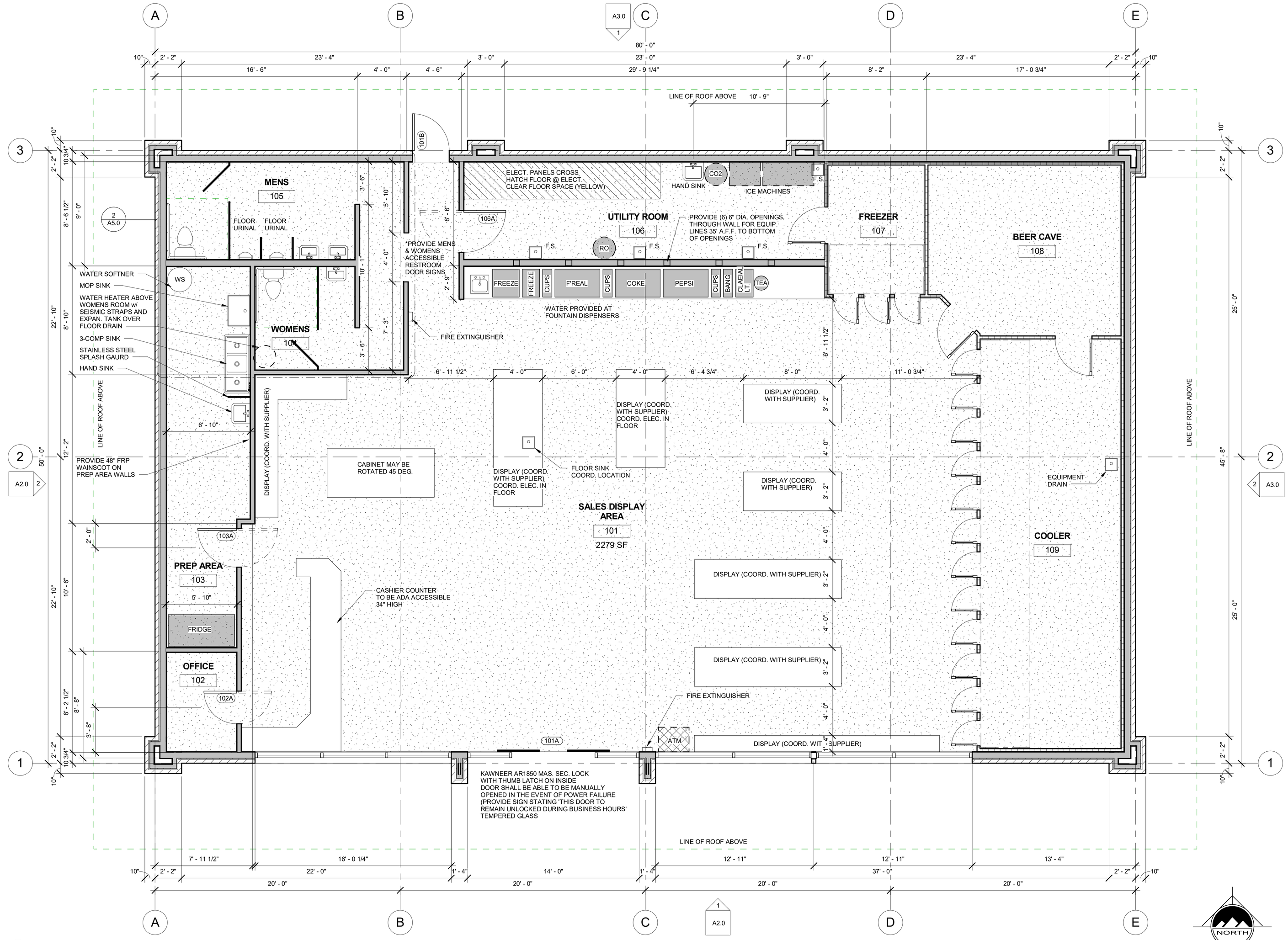

1 FLOOR PLAN
SCALE: 1/4" = 1'-0"

ROOM SCHEDULE

NUMBER	NAME	FLOOR FINISH	BASE FINISH	WALL FINISHES NORTH	EAST	SOUTH	WEST	CEILINGS HEIGHTS	FINISH	COMMENTS
101	SALES DISPLAY AREA	STAINED CONCRETE	4" RUBBER	PAINT	PAINT	PAINT	PAINT	11' - 6"	ACOUSTICAL GRID	
102	OFFICE	STAINED CONCRETE	4" RUBBER	PAINT	PAINT	PAINT	PAINT	9' - 0"	ACOUSTICAL GRID	
103	PREP AREA	STAINED CONCRETE	4" RUBBER	PAINT/FRP	PAINT/FRP	PAINT/FRP	PAINT/FRP	10' - 0"	ACOUSTICAL GRID	48" FRP WAINSCOT
104	WOMENS	CERAMIC TILE	6" TILE	PAINT/TILE	PAINT/TILE	PAINT/TILE	PAINT/TILE	9' - 0"	GYP. BOARD	48" TILE WAINSCOT
105	MENS	CERAMIC TILE	6" TILE	PAINT/TILE	PAINT/TILE	PAINT/TILE	PAINT/TILE	9' - 0"	GYP. BOARD	48" TILE WAINSCOT
106	UTILITY ROOM	STAINED CONCRETE	4" RUBBER	PAINT	PAINT	PAINT	PAINT	10' - 0"	GYP. BOARD	
107	FREEZER	SEALED CONCRETE	NA	NA	NA	NA	NA	8' - 0"	NA	
108	BEER CAVE	SEALED CONCRETE	NA	NA	NA	NA	NA	8' - 0"	NA	
109	COOLER	SEALED CONCRETE	NA	NA	NA	NA	NA	8' - 0"	NA	

DOOR SCHEDULE

MARK	WIDTH	HEIGHT	FRAME TYPE	FINISH	FIRE RATING	HARDWARE	COMMENTS
101B	3' - 0"	7' - 0"	METAL	PAINT	NONE	PANIC HARDWARE	ALARM / NO OUTSIDE LATCH
102A	2' - 8"	7' - 0"	CUSTOM	STAINLESS STEEL	NONE	PUSH	CUSTOM
103A	3' - 2"	7' - 0"	CUSTOM	STAINLESS STEEL	NONE	PUSH	CUSTOM
106A	3' - 5"	7' - 0"	CUSTOM	STAINLESS STEEL	NONE	PUSH	CUSTOM
Grand total: 4							

1. DOOR THRESHOLDS TO BE LESS THAN 1/2" ABOVE FINISH FLOOR.
2. ALL DOOR HARWARE TO BE ADA LEVER TYPE.
3. EXIT DOORS ARE TO BE OPENABLE FROM THE INSIDE WITHOUT THE USE OF A KEY, SPECIAL KNOWLEDGE OR EFFORT.

ENSIGN
THE STANDARD IN ENGINEERING

SALT LAKE CITY
45 W. 10000 S., Suite 500
Sandy, UT 84070
Phone: 801.255.0529

LAYTON
Phone: 801.547.1100

TOOELE
Phone: 435.843.3590

CEDAR CITY
Phone: 435.865.1453

RICHFIELD
Phone: 435.590.0187

COLORADO SPRINGS
Phone: 719.476.0119

WWW.ENSIGNENG.COM

CLIENT INFORMATION:

CLIENT INFORMATION:
HOLIDAY OIL CORP.
c/o JERRY WAGSTAFF
3115 WEST 2100 SOUTH
WEST VALLEY CITY, UTAH
(801)973-7002

THE NEW HOLIDAY OIL MAGNA

3592 SOUTH 8400 WEST MAGNA UTAH 84044

CONCEPT 2/2/16

NO.	DATE	REVISION

FLOOR PLAN

PROJECT NUMBER
6753
DATE
12/14/16
DRAWN BY
Author
PROJECT ENGINEER
Designer
PROJECT MANAGER
Approver

A1.0

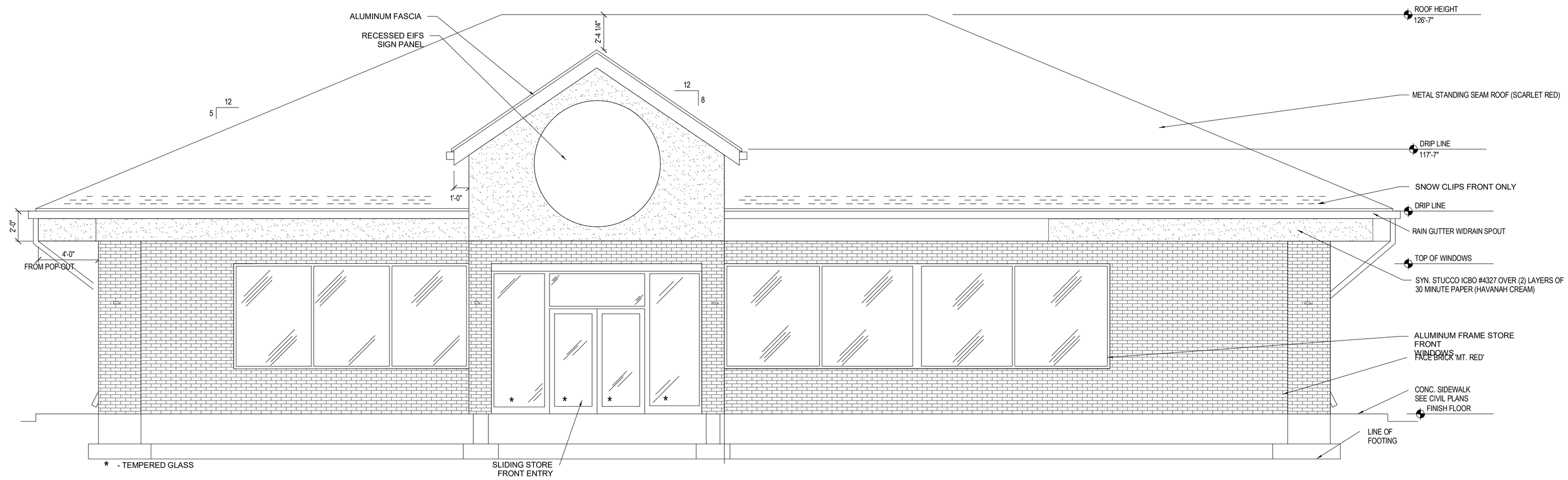

1 ELEVATION FRONT
SCALE: 1/4" = 1'-0"

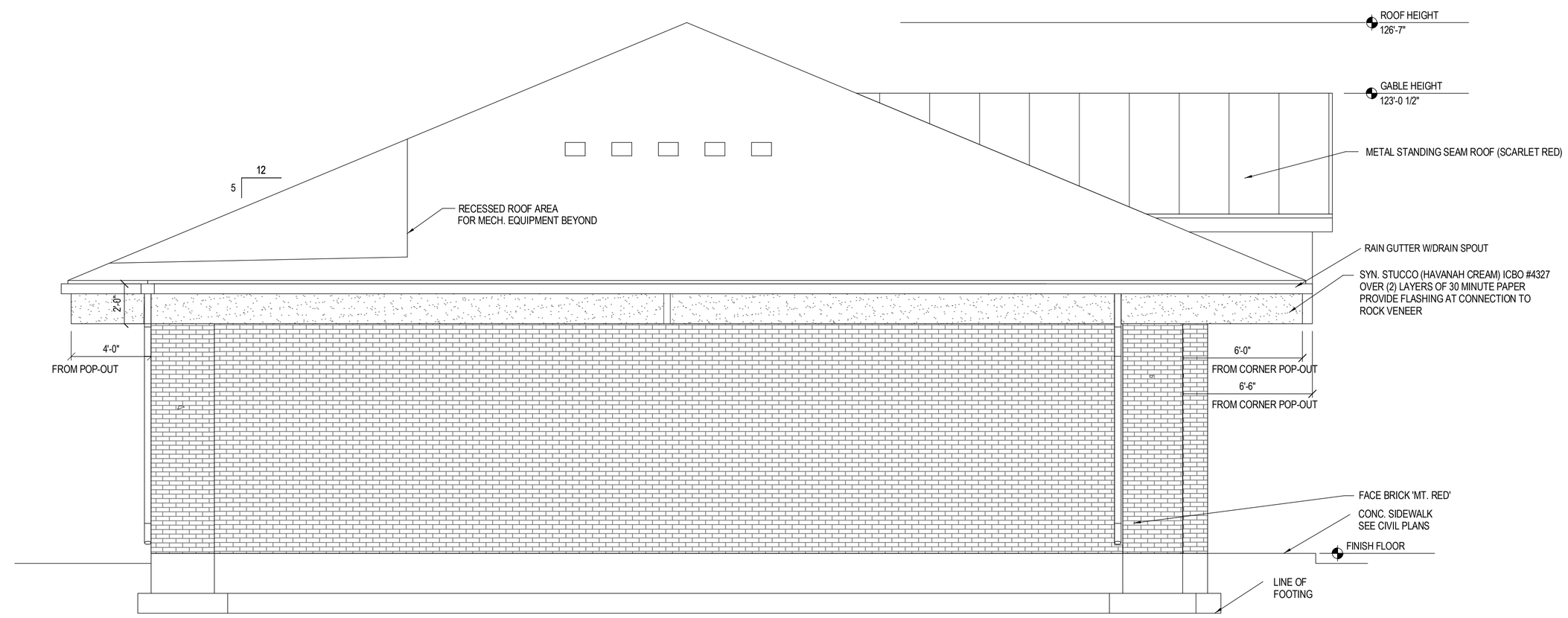

2 ELEVATION - LEFT
SCALE: 1/4" = 1'-0"

ENSIGN
THE STANDARD IN ENGINEERING

SALT LAKE CITY
45 W. 10000 S., Suite 500
Sandy, UT 84070
Phone: 801.255.0529

LAYTON
Phone: 801.547.1100

TOOELE
Phone: 435.843.3590

CEDAR CITY
Phone: 435.865.1453

RICHFIELD
Phone: 435.590.0187

COLORADO SPRINGS
Phone: 719.476.0119

WWW.ENSIGNENG.COM

CLIENT INFORMATION:

CLIENT INFORMATION:
HOLIDAY OIL CORP.
c/o JERRY WAGSTAFF
3115 WEST 2100 SOUTH
WEST VALLEY CITY, UTAH
(801)973-7002

Holiday

THE NEW HOLIDAY OIL MAGNA

3592 SOUTH 8400 WEST MAGNA UTAH 84044

CONCEPT 2/2/16

NO.	DATE	REVISION

EXTERIOR ELEVATIONS

PROJECT NUMBER
6753
DATE
12/14/16
DRAWN BY
Author
PROJECT ENGINEER
Designer
PROJECT MANAGER
Approver

A2.0

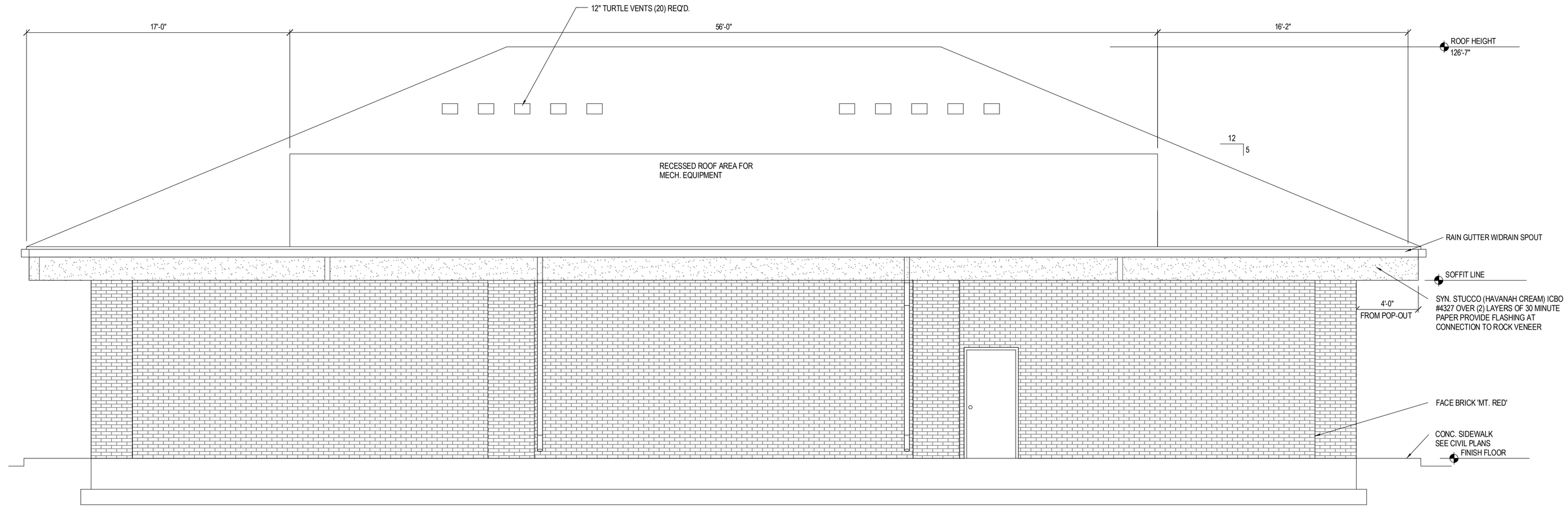

1 ELEVATION BACK
SCALE: 1/4" = 1'-0"

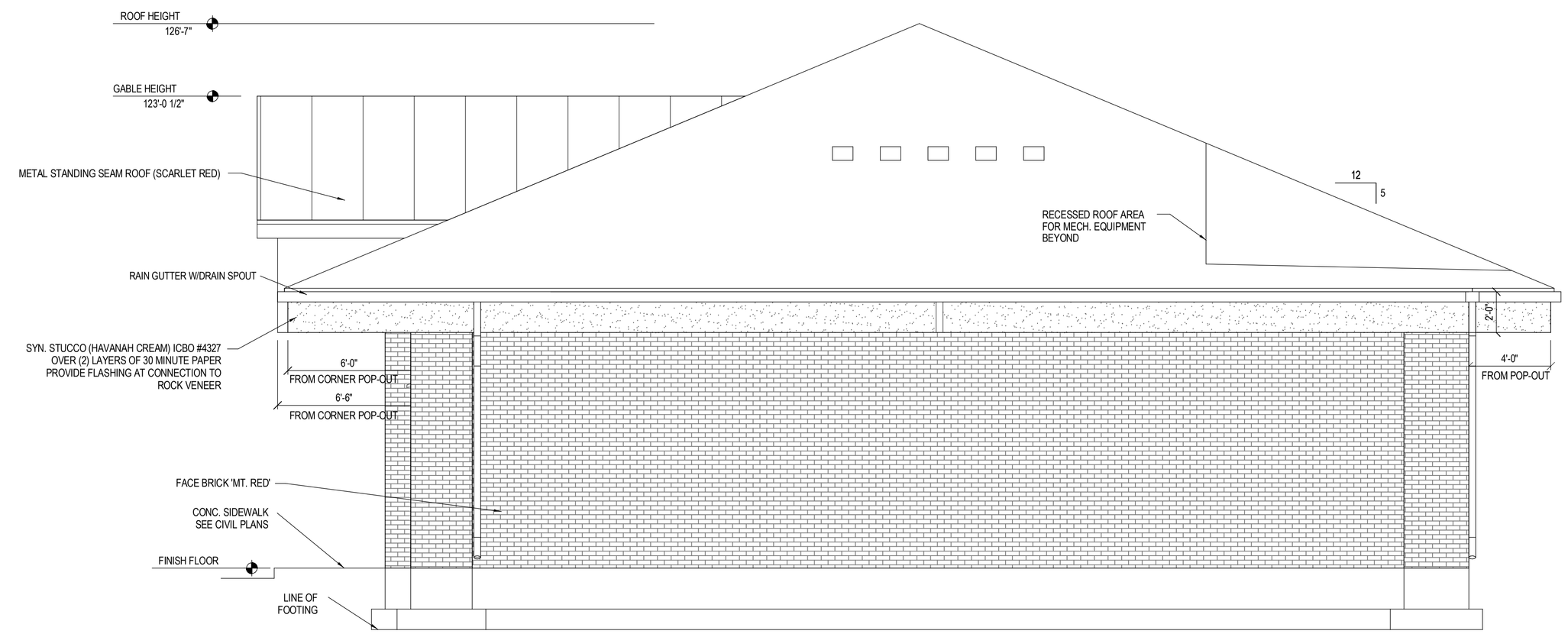

2 ELEVATION - RIGHT
SCALE: 1/4" = 1'-0"

ENSIGN
THE STANDARD IN ENGINEERING

SALT LAKE CITY
45 W. 10000 S., Suite 500
Sandy, UT 84070
Phone: 801.255.0529

LAYTON
Phone: 801.547.1100

TOOELE
Phone: 435.843.3590

CEDAR CITY
Phone: 435.865.1453

RICHFIELD
Phone: 435.590.0187

COLORADO SPRINGS
Phone: 719.476.0119

WWW.ENSIGNENG.COM

CLIENT INFORMATION:

CLIENT INFORMATION:
HOLIDAY OIL CORP.
c/o JERRY WAGSTAFF
3115 WEST 2100 SOUTH
WEST VALLEY CITY, UTAH
(801)973-7002

Holiday

THE NEW HOLIDAY OIL MAGNA

3592 SOUTH 8400 WEST
MAGNA UTAH 84044

CONCEPT 2/2/16

NO.	DATE	REVISION

EXTERIOR ELEVATIONS

PROJECT NUMBER
6753
DATE
12/14/16
DRAWN BY
Author
PROJECT ENGINEER
Designer
PROJECT MANAGER
Approver

A3.0

KFC

KFC
CAR WASH
ENTER

From: Rolen Yoshinaga
Sent: Friday, April 08, 2016 10:47 AM
To: Wendy Gurr
Cc: Bennion Gardner[redacted]
Subject: FW: 29779 - 3592 S 8400 W

Wendy:

Can you place the comments below in the materials for the Magna Planning Commission? Thanks.

RY

From: Bennion Gardner[redacted]
Sent: Thursday, April 07, 2016 4:36 PM
To: Rolen Yoshinaga
Subject: Fwd: 29779 - 3592 S 8400 W

Rolen,

I guess I didn't have the right email for the planner on this application. I wasn't sure, which is why I copied you. Would you mind forwarding my comment on so it makes it into the file? Thanks!

Bennion Gardner

---------- Forwarded message ----------
From: "Bennion Gardner"[redacted]
Date: Apr 7, 2016 4:20 PM
Subject: 29779 - 3592 S 8400 W
To: <jmiller@slco.org>
Cc: <ryoshinaga@slco.org>

I am writing to comment on the conditional use application for a service station at 3592 S 8400 W, Magna UT. I live just west of the site at [redacted] Magna UT.

My concern is that the new station use light fixtures that fully shield the light source, reduce glare, limit the height of and light poles or signage, and direct light downward to prevent light trespass into neighboring properties.

This concern stems from the poor lighting used at the neighboring McDonalds location. The light poles there are much taller than is necessary and the light fixtures are directed toward neighboring homes such as mine in some instances, rather than at the ground.

Poor lighting installation can reduce safety by causing unwanted glare. Misdirected light is also a waste of money for the property owner. Studies have also shown negative effects caused by light pollution on the natural environment.

Please ensure the applicant's lighting plan retains light on the property and does not impact the surrounding homes.

Thank you.

Bennion Gardner

SALT LAKE COUNTY
TOWNSHIPS

OFFICE OF TOWNSHIP SERVICES
Planning and Development Services
2001 S. State Street N3-600 • Salt Lake City, UT 84190-4050
Phone: (385) 468-6700 • Fax: (385) 468-6674
www.pwpds.slco.org

File # 29789

Conditional Use Summary and Recommendation

Public Body: Magna Township Planning Commission
Meeting Date: April 14, 2016
Parcel ID: 1433227064
Current Zone: C-2
Property Address: 7329 West 3500 South, Magna
Request: Conditional Use

Community Council: Magna Community Council
Township/Unincorporated: Magna Township
Planner: Tom C. Zumbado
Community Council Recommendation: Approval
Planning Staff Recommendation: Approval
Applicant Name: Daniel Thurgood

PROJECT DESCRIPTION

Daniel Thurgood is requesting conditional use approval for new cell tower on behalf of his client, Verizon Wireless.

SITE & VICINITY DESCRIPTION (see attached map)

The parcel is located on the corner of 3500 South and Mason Vista Way directly across the street from Patrick Drive. The proposed new cell tower will be tucked into the southwest corner of the property and will share the land with an O'Reilly Auto Parts, which is situated in the northeast corner of the property.

File #29789: New Verizon Cell Tower
7329 West 3500 South, Magna UT 84044

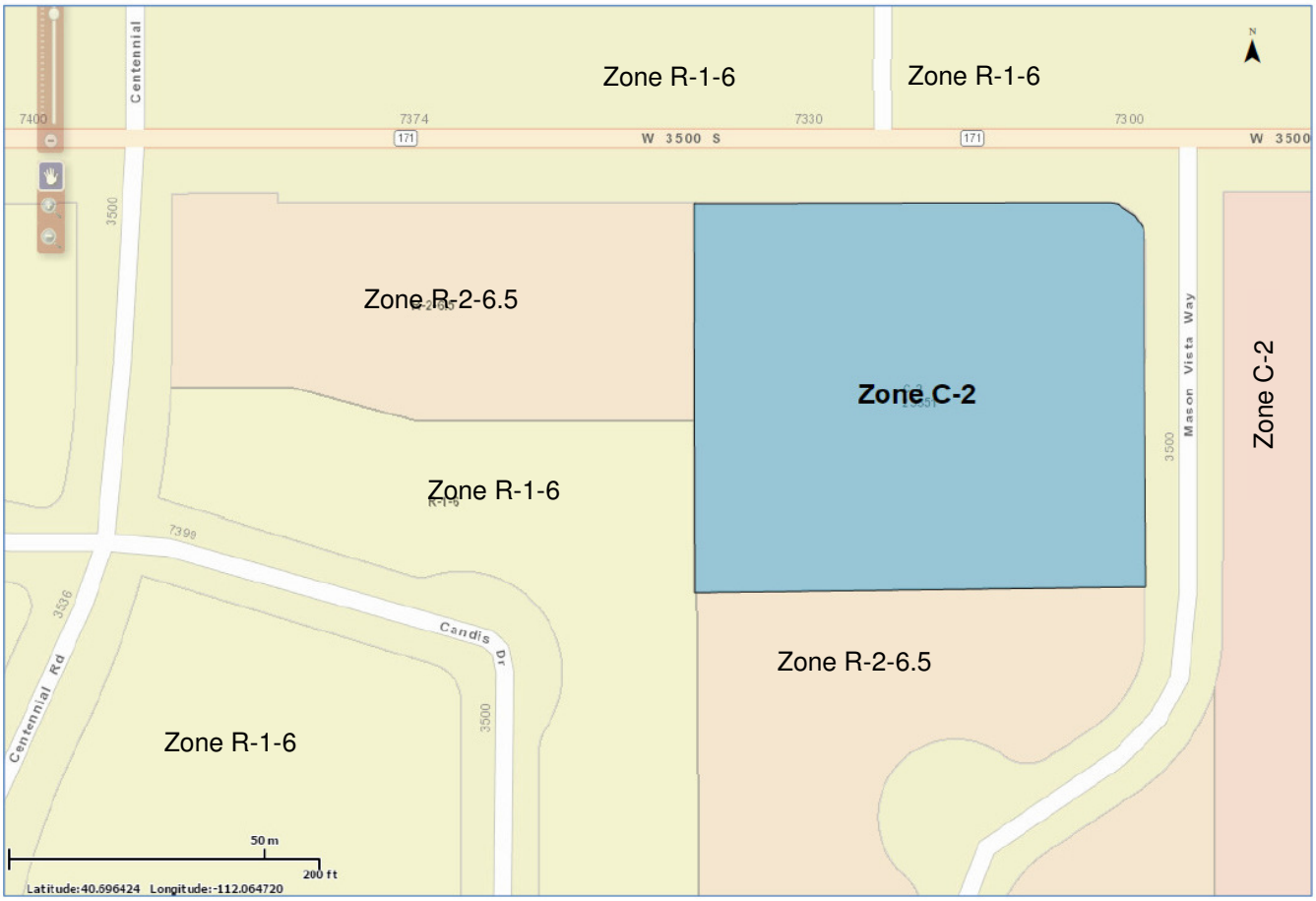

NEIGHBORHOOD RESPONSE

As of April 6 2016, there has been no neighborhood response to File #29789.

COMMUNITY COUNCIL RESPONSE

At their regularly scheduled meeting on March 17 2016, the Magna Community Council unanimously voted to provide a positive recommendation to the Magna Planning Commission.

TOWNSHIP COUNCIL RESPONSE

File #29789 is scheduled to appear before the Magna Township Council on April 7 2016, after the deadline for staff report preparation. Staff will provide a verbal account of the Township Council response at the Planning Commission meeting.

REVIEWING AGENCIES RESPONSE

AGENCY: Geology DATE: January 11 2016
RECOMMENDATION: Approved With Comments

1. Need to submit a copy of the Geotechnical report and liquefaction analysis
2. per SLCO Ordinance 19.75.050 Cell towers are considered critical structures

AGENCY: Grading DATE: December 21 2015
RECOMMENDATION: Approved With Comments

1. Need to provide a copy of the Geotechnical engineer report for review and comment.
2. Need to provide Erosion Control plans for the construction of the tower on the plans, including BMP's (Best Management Practices) for but not limited to storm water runoff, concrete washout, tracking, and restroom facilities etc.

AGENCY: Health Department DATE: January 2016
RECOMMENDATION: Approved With Comments
A water and sewer availability letter will be required if there is a building on site that will house employees or if there is a restroom on site.

AGENCY: Traffic DATE: January 2016
RECOMMENDATION: Approved With Comments
UDOT approval required for access onto 3500 South Street. Submit proof of UDOT approval or use existing approved access. (*Planner Note: UDOT Approval Submitted on March 9 2016*.)

AGENCY: Building DATE: January 2016
RECOMMENDATION: Approved With Comments
Building permits are required for the construction and installation of the new equipment shelter as well as the cell tower. At time of building permit application, provide complete building plans showing compliance with current building code.

Compliance with current building, construction, engineering, fire, health, landscape and safety standards will be verified prior to final approval.

PLANNING STAFF ANALYSIS

<u>Chapter 19.83 - WIRELESS TELECOMMUNICATIONS FACILITIES</u>

19.83.020 – Definitions
"Monopole facility" means an antenna or series of individual antennas mounted on a single cylindrical pole. Also includes associated equipment. For the purposes of this chapter, if a facility does not fit the definition of a roof or wall mounted facility it shall be considered a monopole facility.
"Wireless telecommunications facility" means an unmanned structure which consists of equipment used primarily for the transmission, reception or transfer of voice or data through radio wave or wireless transmissions. Such sites typically require the construction of transmission support structures to which antenna equipment is attached.
(Ord. 1394 § 1 (part), 1997)

19.83.050 - Allowable Uses
Staff has verified that a monopole facility is a conditional use in the C-2 Zone.

19.83.060 - Facility Types & Standards: Monopole
The following provisions apply to monopoles:
1. The height limit for monopoles is sixty feet except the planning commission may allow a monopole up to eighty feet in the C-2, C-3, M-1, and M-2 zones if it finds: (1) that the monopole will blend in with surrounding structures, poles, or trees and is compatible with surrounding uses, (2) the monopole will be available for co-location with other companies, and (3) the monopole will be setback at least three hundred feet from any residential zone boundary. The height shall be measured from the top of the structure including antennas, to the original grade directly adjacent to the monopole.

Staff has verified that the proposed monopole height is 60 feet with an additional 6 feet for a lightning rod. In addition, the County Zoning Administrator has informed Staff that appendages (like lightning rods) are not calculated in the heights of monopoles, only the pole and antenna fixtures.

3. No monopoles shall be allowed in the front yard setback of any lot.

Staff has verified that the proposed monopole is not in a front yard setback.

4. Monopoles shall be setback from any residential structure a distance equal to its height.

Staff has verified that the proposed monopole is 82′6″ away from the nearest residential structure.

5. Stealth monopole facilities are encouraged and shall be allowed to vary from the provisions of this section as determined by development services division for permitted uses and the planning commission for conditional uses. Stealth monopoles are not required to be located with public or quasi-public uses in all R-1, R-2, and R-4-8.5 zones (see Table 19.83.050).

19.83.070 - Color
Monopoles, antennas, and any associated buildings or equipment shall be painted to blend with the surroundings which they are most commonly seen. The color shall be determined on a case-by-case basis by the planning commission for conditional uses and development services division for permitted uses. Within six months after the facility has been constructed, the planning commission or the development services division may require the color be changed if it is determined that the original color does not blend with the surroundings.
(Ord. 1394 § 1 (part), 1997)

<u>Chapter 19.77 - WATER EFFICIENT LANDSCAPE DESIGN AND DEVELOPMENT STANDARDS</u>

19.77.070 - Screening of Service and Mechanical Equipment
A. Screening Required. Service areas and on-grade mechanical equipment shall be screened from public view by plants, solid opaque fencing, berms, or a combination thereof. These elements shall also be sited to minimize their visibility and impact or enclosed so as to appear to be an integral part of the architectural design of the building. Site elements that are subject to this provision include but are not limited to the following:
1. Air conditioning units;
2. Electrical transformers;
3. Loading areas and docks;
<u>4. Mechanical equipment;</u>
5. Outdoor storage areas;
6. Public utility transformers;
7. Service yards;
8. Telephone transformers;
9. Trash collection areas;
10. Trash dumpsters.

(Ord. 1609 § 2 (part), 2007)

Staff has concluded that the mechanical equipment located at the base of the monopole will have to be screened from public view by plants, solid opaque fencing, berms, or a combination thereof.

PLANNING STAFF RECOMMENDATION

"Unless otherwise designated, a decision approving a conditional use application shall be a preliminary approval of the application." [19.84.095] "…the [Development Services] director…shall issue a final approval letter upon satisfaction of the planning commission's conditions of approval." [19.84.050]

Staff has reviewed this request for compliance with the standards set forth in Section 19.84.060 of the Zoning Ordinance and recommends the following considerations to the Planning Commission:

Staff recommends approval of File #29879 subject to the following conditions:

1. Applicant discloses the color of the monopole to the planning commission and acknowledges that the planning commission or SLCo Township Services may require the color be changed up to six months after the facility has been constructed.
2. Applicant complies with Ordinance 19.77.070 calling for the screening (from public view) of all mechanical equipment located at the base of the monopole.

File #29789: Aerial Map

New Cell Tower Conditional Use

7329 West 3500 South, Magna UT

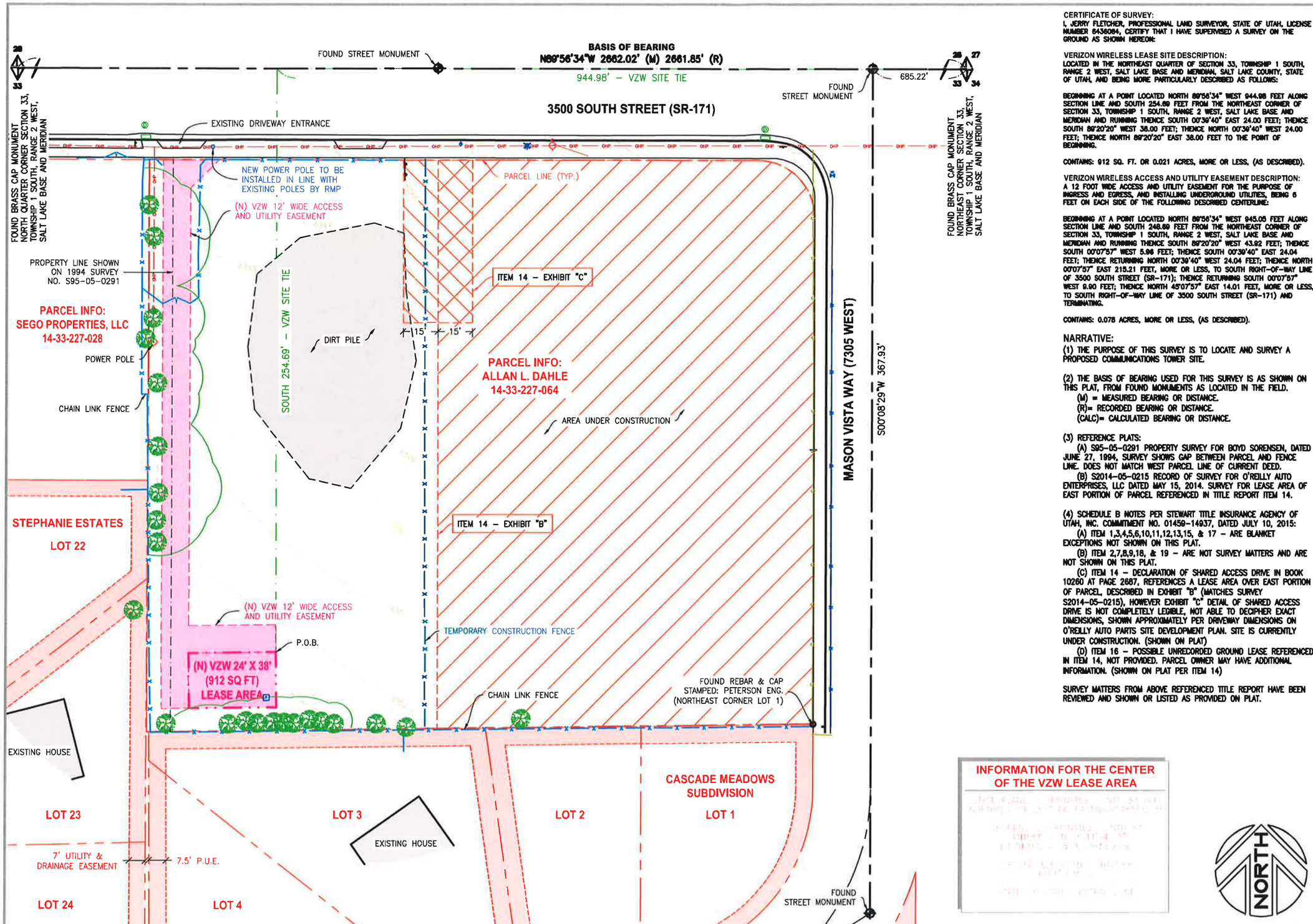

CERTIFICATE OF SURVEY:
I, JERRY FLETCHER, PROFESSIONAL LAND SURVEYOR, STATE OF UTAH, LICENSE NUMBER 6436064, CERTIFY THAT I HAVE SUPERVISED A SURVEY ON THE GROUND AS SHOWN HEREON:

VERIZON WIRELESS LEASE SITE DESCRIPTION:
LOCATED IN THE NORTHEAST QUARTER OF SECTION 33, TOWNSHIP 1 SOUTH, RANGE 2 WEST, SALT LAKE BASE AND MERIDIAN, SALT LAKE COUNTY, STATE OF UTAH, AND BEING MORE PARTICULARLY DESCRIBED AS FOLLOWS:

BEGINNING AT A POINT LOCATED NORTH 89°56'34" WEST 944.98 FEET ALONG SECTION LINE AND SOUTH 254.69 FEET FROM THE NORTHEAST CORNER OF SECTION 33, TOWNSHIP 1 SOUTH, RANGE 2 WEST, SALT LAKE BASE AND MERIDIAN AND RUNNING THENCE SOUTH 00°39'40" EAST 24.00 FEET; THENCE SOUTH 89°20'20" WEST 38.00 FEET; THENCE NORTH 00°39'40" WEST 24.00 FEET; THENCE NORTH 89°20'20" EAST 38.00 FEET TO THE POINT OF BEGINNING.

CONTAINS: 912 SQ. FT. OR 0.021 ACRES, MORE OR LESS, (AS DESCRIBED).

VERIZON WIRELESS ACCESS AND UTILITY EASEMENT DESCRIPTION:
A 12 FOOT WIDE ACCESS AND UTILITY EASEMENT FOR THE PURPOSE OF INGRESS AND EGRESS, AND INSTALLING UNDERGROUND UTILITIES, BEING 6 FEET ON EACH SIDE OF THE FOLLOWING DESCRIBED CENTERLINE:

BEGINNING AT A POINT LOCATED NORTH 89°56'34" WEST 945.05 FEET ALONG SECTION LINE AND SOUTH 248.69 FEET FROM THE NORTHEAST CORNER OF SECTION 33, TOWNSHIP 1 SOUTH, RANGE 2 WEST, SALT LAKE BASE AND MERIDIAN AND RUNNING THENCE SOUTH 89°20'20" WEST 43.92 FEET; THENCE SOUTH 00°07'57" WEST 5.06 FEET; THENCE SOUTH 00°39'40" EAST 24.04 FEET; THENCE RETURNING NORTH 00°39'40" WEST 24.04 FEET; THENCE NORTH 00°07'57" EAST 215.21 FEET, MORE OR LESS, TO SOUTH RIGHT-OF-WAY LINE OF 3500 SOUTH STREET (SR-171); THENCE RETURNING SOUTH 00°07'57" WEST 9.90 FEET; THENCE NORTH 45°07'57" EAST 14.01 FEET, MORE OR LESS, TO SOUTH RIGHT-OF-WAY LINE OF 3500 SOUTH STREET (SR-171) AND TERMINATING.

CONTAINS: 0.078 ACRES, MORE OR LESS, (AS DESCRIBED).

NARRATIVE:
(1) THE PURPOSE OF THIS SURVEY IS TO LOCATE AND SURVEY A PROPOSED COMMUNICATIONS TOWER SITE.

(2) THE BASIS OF BEARING USED FOR THIS SURVEY IS AS SHOWN ON THIS PLAT, FROM FOUND MONUMENTS AS LOCATED IN THE FIELD.
(M) = MEASURED BEARING OR DISTANCE.
(R)= RECORDED BEARING OR DISTANCE.
(CALC)= CALCULATED BEARING OR DISTANCE.

(3) REFERENCE PLATS:
(A) S95-05-0291 PROPERTY SURVEY FOR BOYD SORENSEN, DATED JUNE 27, 1994, SURVEY SHOWS GAP BETWEEN PARCEL AND FENCE LINE. DOES NOT MATCH WEST PARCEL LINE OF CURRENT DEED.
(B) S2014-05-0215 RECORD OF SURVEY FOR O'REILLY AUTO ENTERPRISES, LLC DATED MAY 15, 2014. SURVEY FOR LEASE AREA OF EAST PORTION OF PARCEL REFERENCED IN TITLE REPORT ITEM 14.

(4) SCHEDULE B NOTES PER STEWART TITLE INSURANCE AGENCY OF UTAH, INC. COMMITMENT NO. 01459-14937, DATED JULY 10, 2015:
(A) ITEM 1,3,4,5,6,10,11,12,13,15, & 17 – ARE BLANKET EXCEPTIONS NOT SHOWN ON THIS PLAT.
(B) ITEM 2,7,8,9,18, & 19 – ARE NOT SURVEY MATTERS AND ARE NOT SHOWN ON THIS PLAT.
(C) ITEM 14 – DECLARATION OF SHARED ACCESS DRIVE IN BOOK 10260 AT PAGE 2687, REFERENCES A LEASE AREA OVER EAST PORTION OF PARCEL, DESCRIBED IN EXHIBIT "B" (MATCHES SURVEY S2014-05-0215), HOWEVER EXHIBIT "C" DETAIL OF SHARED ACCESS DRIVE IS NOT COMPLETELY LEGIBLE, NOT ABLE TO DECIPHER EXACT DIMENSIONS, SHOWN APPROXIMATELY PER DRIVEWAY DIMENSIONS ON O'REILLY AUTO PARTS SITE DEVELOPMENT PLAN. SITE IS CURRENTLY UNDER CONSTRUCTION. (SHOWN ON PLAT)
(D) ITEM 16 – POSSIBLE UNRECORDED GROUND LEASE REFERENCED IN ITEM 14, NOT PROVIDED. PARCEL OWNER MAY HAVE ADDITIONAL INFORMATION. (SHOWN ON PLAT PER ITEM 14)

SURVEY MATTERS FROM ABOVE REFERENCED TITLE REPORT HAVE BEEN REVIEWED AND SHOWN OR LISTED AS PROVIDED ON PLAT.

INFORMATION FOR THE CENTER OF THE VZW LEASE AREA

verizon wireless
VERIZON WIRELESS
9656 SOUTH PROSPERITY ROAD
WEST JORDAN, UTAH 84088

TAEC
Technology Associates Engineering Corporation Inc.
TECHNOLOGY ASSOCIATES
UTAH MARKET OFFICE
5710 SOUTH GREEN STREET
SALT LAKE CITY, UTAH 84123
CORPORATE OFFICE
3115 SOUTH MELROSE DRIVE, SUITE #110
CARLSBAD, CALIFORNIA 92010

SURVEY PREPARED BY:
SUPERIOR SURVEYING, LLC
PHONE: 801-230-8968
EMAIL: JERRY@SUPERIOR-SURVEYING.COM

DRAWN BY:	JERRY F.
CHECKED BY:	JERRY F.

REV	DATE	DESCRIPTION
0	10.23.2015	SITE SURVEY

PROFESSIONAL LAND SURVEYOR
10-23-15
No. 6436064
JERRY FLETCHER
STATE OF UTAH

SAL – CHULA
NE SEC 33, T1S, R2W
7329 WEST 3500 SOUTH
MAGNA, UTAH 84044
-- RAWLAND SITE --

SHEET TITLE
SITE SURVEY

SHEET NUMBER
SURV

SITE SURVEY | SCALE: 1" = 40'-0" | 1

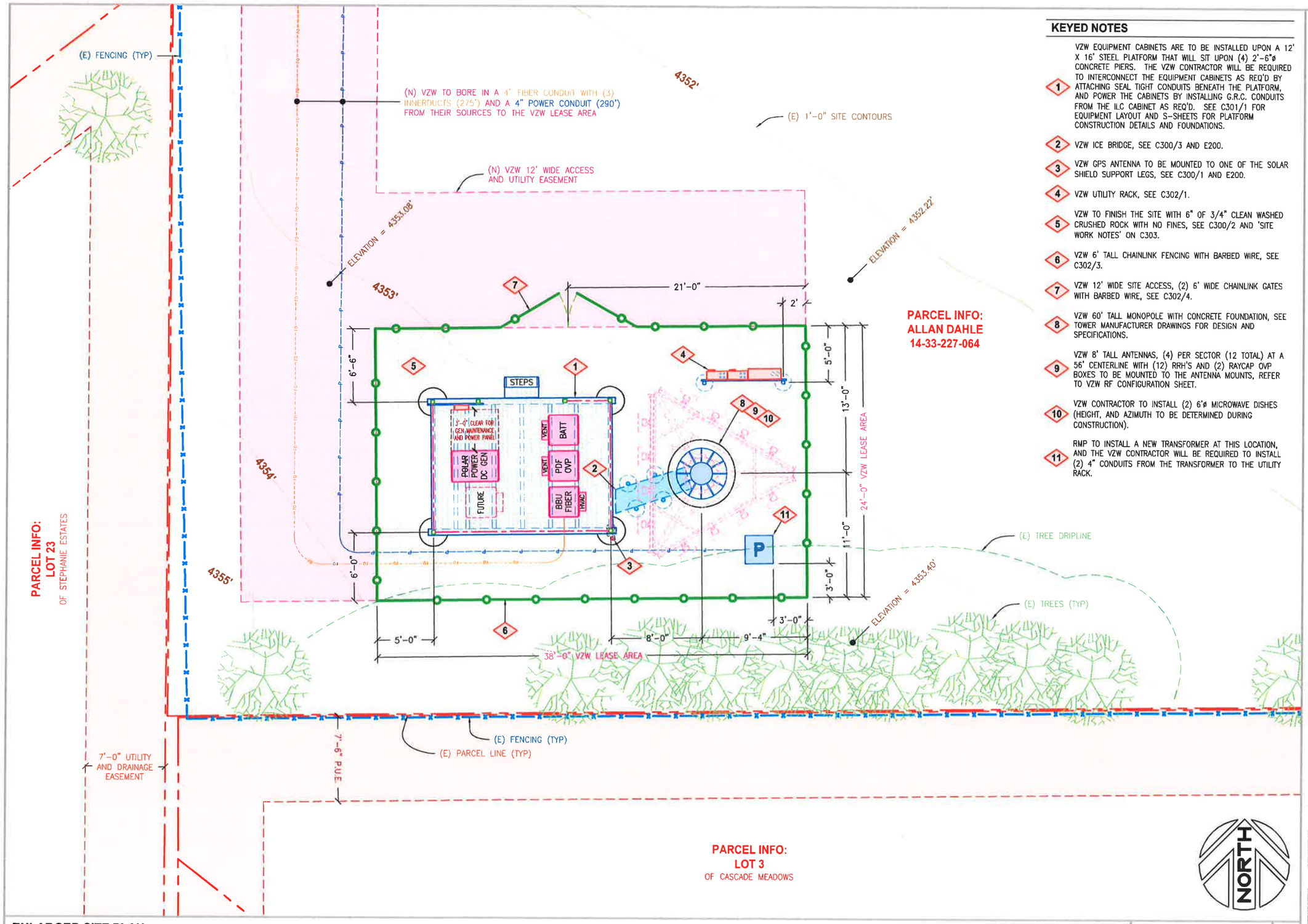

KEYED NOTES

1. VZW EQUIPMENT CABINETS ARE TO BE INSTALLED UPON A 12' X 16' STEEL PLATFORM THAT WILL SIT UPON (4) 2'-6"ø CONCRETE PIERS. THE VZW CONTRACTOR WILL BE REQUIRED TO INTERCONNECT THE EQUIPMENT CABINETS AS REQ'D BY ATTACHING SEAL TIGHT CONDUITS BENEATH THE PLATFORM, AND POWER THE CABINETS BY INSTALLING G.R.C. CONDUITS FROM THE ILC CABINET AS REQ'D. SEE C301/1 FOR EQUIPMENT LAYOUT AND S-SHEETS FOR PLATFORM CONSTRUCTION DETAILS AND FOUNDATIONS.
2. VZW ICE BRIDGE, SEE C300/3 AND E200.
3. VZW GPS ANTENNA TO BE MOUNTED TO ONE OF THE SOLAR SHIELD SUPPORT LEGS, SEE C300/1 AND E200.
4. VZW UTILITY RACK, SEE C302/1.
5. VZW TO FINISH THE SITE WITH 6" OF 3/4" CLEAN WASHED CRUSHED ROCK WITH NO FINES, SEE C300/2 AND 'SITE WORK NOTES' ON C303.
6. VZW 6' TALL CHAINLINK FENCING WITH BARBED WIRE, SEE C302/3.
7. VZW 12' WIDE SITE ACCESS, (2) 6' WIDE CHAINLINK GATES WITH BARBED WIRE, SEE C302/4.
8. VZW 60' TALL MONOPOLE WITH CONCRETE FOUNDATION, SEE TOWER MANUFACTURER DRAWINGS FOR DESIGN AND SPECIFICATIONS.
9. VZW 8' TALL ANTENNAS, (4) PER SECTOR (12 TOTAL) AT A 56' CENTERLINE WITH (12) RRH'S AND (2) RAYCAP OVP BOXES TO BE MOUNTED TO THE ANTENNA MOUNTS, REFER TO VZW RF CONFIGURATION SHEET.
10. VZW CONTRACTOR TO INSTALL (2) 6'ø MICROWAVE DISHES (HEIGHT, AND AZIMUTH TO BE DETERMINED DURING CONSTRUCTION).
11. RMP TO INSTALL A NEW TRANSFORMER AT THIS LOCATION, AND THE VZW CONTRACTOR WILL BE REQUIRED TO INSTALL (2) 4" CONDUITS FROM THE TRANSFORMER TO THE UTILITY RACK.

verizon wireless

VERIZON WIRELESS
9656 SOUTH PROSPERITY ROAD
WEST JORDAN, UTAH 84088

TAEC
Technology Associates Engineering Corporation Inc.
TECHNOLOGY ASSOCIATES

UTAH MARKET OFFICE
5710 SOUTH GREEN STREET
SALT LAKE CITY, UTAH 84123

CORPORATE OFFICE
3115 SOUTH MELROSE DRIVE, SUITE #110
CARLSBAD, CALIFORNIA 92010

DRAWN BY:	JAY C
CHECKED BY:	DAN T

REV	DATE	DESCRIPTION
0	11.03.2015	ZONING DRAWINGS

SALT LAKE COUNTY TOWNSHIPS

Conceptual Site Plan Approval

Planning	Approved tzumbado: 29789_SitePlan 01/15/2016
Grading	Approved- See Comments Sheet bstephenson: 29789_SitePlan 12/21/2015
Geology	Approved- See Comments Sheet GBaptist: 29789_SitePlan 01/11/2016
Hydrology	Approved mfranciosco: 29789_SitePlan 12/22/2015
Boundary	Review Waived djeffreys: 29789_SitePlan 12/17/2015
Traffic	Denied jcarver: 29789_SitePlan 12/22/2015 1:03:01 PM
UFA	Approved TSmoka: 29789_SitePlan 12/17/2015
Health	Approved- See Comments Sheet adde: 29789_SitePlan 12/29/2015
Building	Approved - See Comments Sheet T Sorensen: 29789_SitePlan 12/17/2015
Operations	Approved ksmeltzer: 29789_SitePlan 12/17/2015

SAL - CHULA
NE SEC 33, T1S, R2W
7329 WEST 3500 SOUTH
MAGNA, UTAH 84044
-- RAWLAND SITE --

SHEET TITLE
ENLARGED SITE PLAN

SHEET NUMBER
C101

ENLARGED SITE PLAN

SCALE: 1/8" = 1'-0"

KEYED NOTES

1. VZW EQUIPMENT CABINETS ARE TO BE INSTALLED UPON A 12' X 16' STEEL PLATFORM THAT WILL SIT UPON (4) 2'-6"ø CONCRETE PIERS. THE VZW CONTRACTOR WILL BE REQUIRED TO INTERCONNECT THE EQUIPMENT CABINETS AS REQ'D BY ATTACHING SEAL TIGHT CONDUITS BENEATH THE PLATFORM, AND POWER THE CABINETS BY INSTALLING G.R.C. CONDUITS FROM THE ILC CABINET AS REQ'D. SEE C301/1 FOR EQUIPMENT LAYOUT AND S-SHEETS FOR PLATFORM CONSTRUCTION DETAILS AND FOUNDATIONS.
2. VZW 6' TALL CHAINLINK FENCING WITH BARBED WIRE, SEE C302/3.
3. VZW 12' WIDE SITE ACCESS, (2) 6' WIDE CHAINLINK GATES WITH BARBED WIRE, SEE C302/4.
4. VZW 60' TALL MONOPOLE WITH CONCRETE FOUNDATION, SEE TOWER MANUFACTURER DRAWINGS FOR DESIGN AND SPECIFICATIONS.
5. VZW 8' TALL ANTENNAS, (4) PER SECTOR (12 TOTAL) AT A 56' CENTERLINE WITH (12) RRH'S AND (2) RAYCAP OVP BOXES TO BE MOUNTED TO THE ANTENNA MOUNTS, REFER TO VZW RF CONFIGURATION SHEET.
6. VZW CONTRACTOR TO INSTALL (2) 6'ø MICROWAVE DISHES (HEIGHT, AND AZIMUTH TO BE DETERMINED DURING CONSTRUCTION).
7. VZW CONTRACTOR TO INSTALL THE 6' TALL LIGHTNING ROD AS SUPPLIED BY TOWER MANUFACTURER.

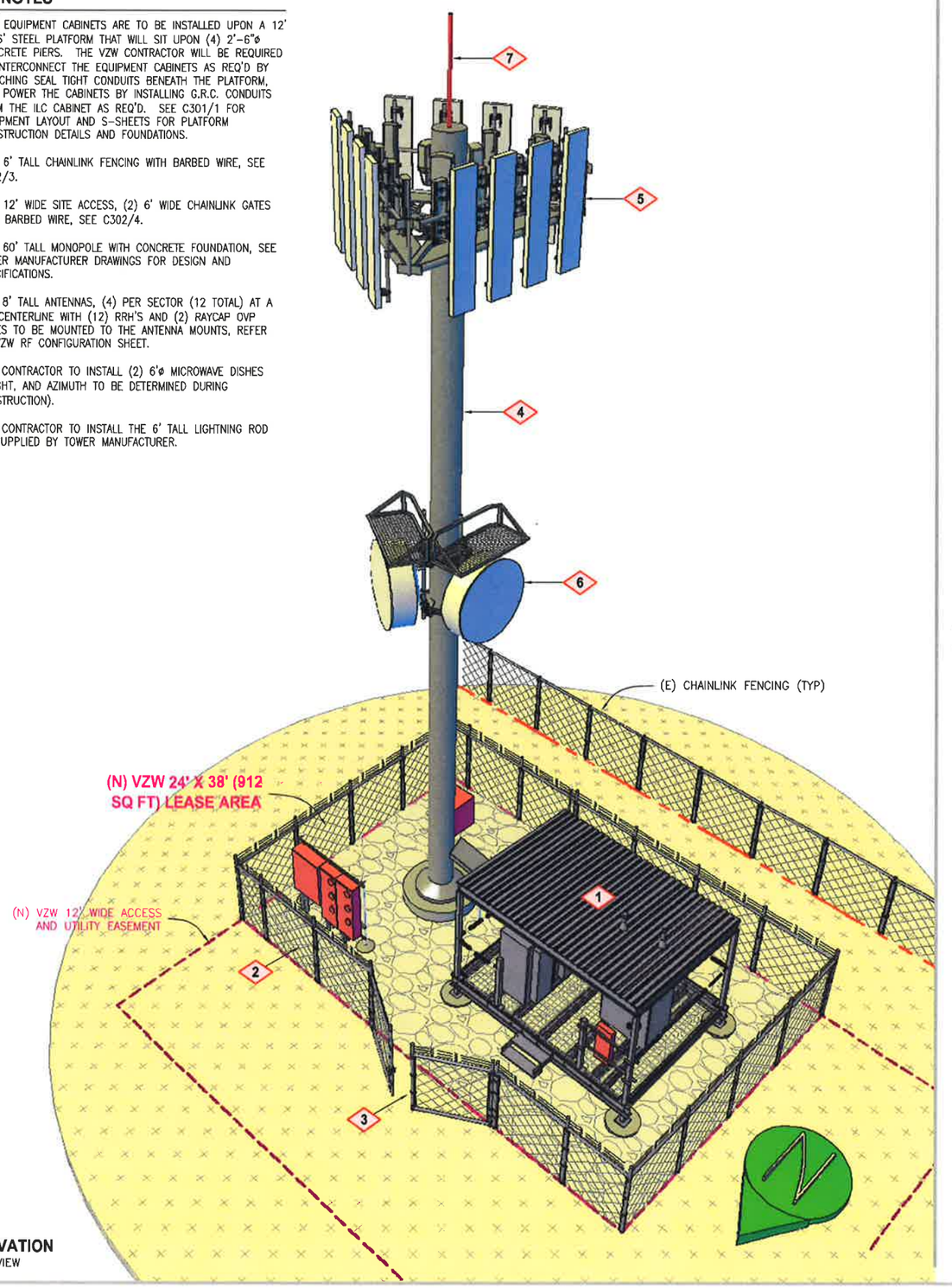

SITE ELEVATION
SOUTHEAST VIEW

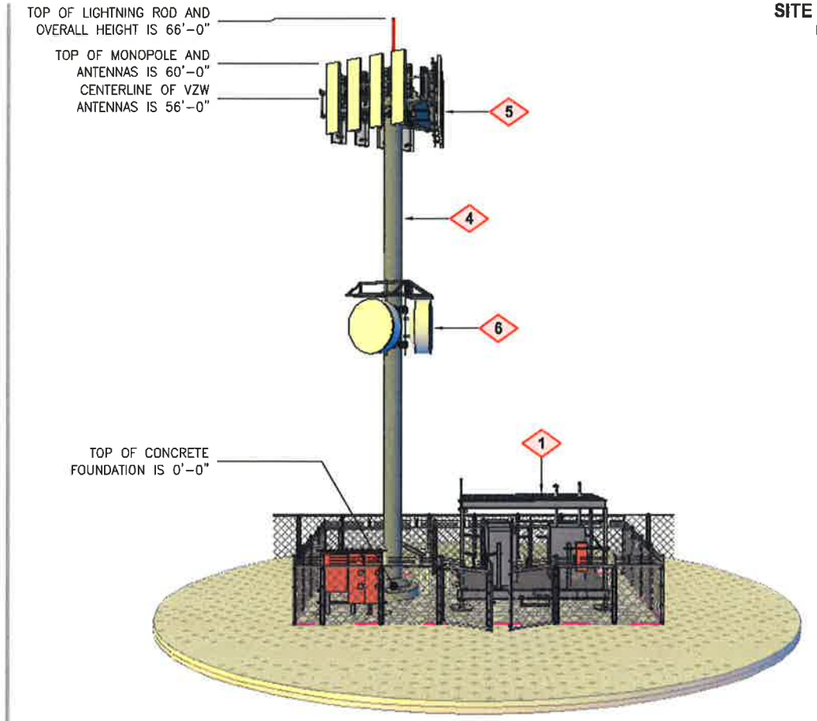

SITE ELEVATION
LOOKING SOUTH

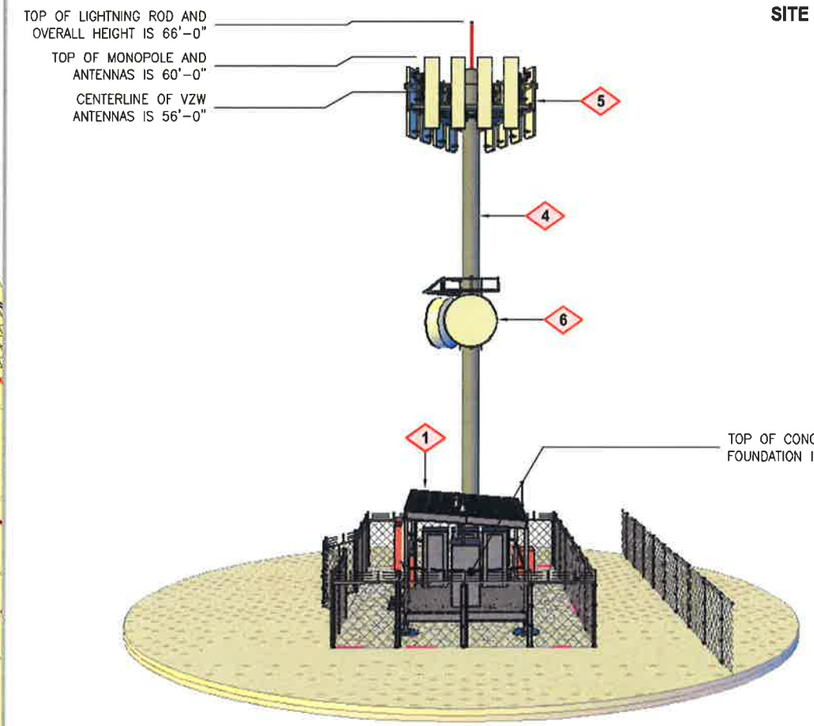

SITE ELEVATION
LOOKING EAST

verizon wireless
VERIZON WIRELESS
9656 SOUTH PROSPERITY ROAD
WEST JORDAN, UTAH 84088

TAEC
Technology Associates Engineering Corporation Inc.
TECHNOLOGY ASSOCIATES

UTAH MARKET OFFICE
5710 SOUTH GREEN STREET
SALT LAKE CITY, UTAH 84123

CORPORATE OFFICE
3115 SOUTH MELROSE DRIVE, SUITE #110
CARLSBAD, CALIFORNIA 92010

DRAWN BY:	JAY C
CHECKED BY:	DAN T

REV	DATE	DESCRIPTION
0	11.03.2015	ZONING DRAWINGS

SAL - CHULA
NE SEC 33, T1S, R2W
7329 WEST 3500 SOUTH
MAGNA, UTAH 84044
-- RAWLAND SITE --

SHEET TITLE
SITE ELEVATIONS

SHEET NUMBER
C200