HARRISON HEIGHTS PHASE 7

A RESIDENTIAL SUBDIVISION
ELK RIDGE, UTAH
FINAL PLAN SET
SEPTEMBER 2015

-SHEET INDEX-

SHEET	SHEET NAME
1	COVER
2	FINAL PLAN SHEET
3	EROSION CONTROL PLAN SHEET
4	UTILITY PLAN SHEET/INDEX
5	RE-VEGETATION/RETENTION PLAN SHEET
6	FINAL PLAT
7	DETAIL SHEET
8	DETAIL SHEET
9	DETAIL SHEET
PP-01	CHRISTLEY LANE - STREET PLAN & PROFILE - STA. 28+70.03 TO STA. 33+32.69
PP-02	ARMSTRONG DRIVE - STREET PLAN & PROFILE - STA. 10+00 TO STA. 11+98.69

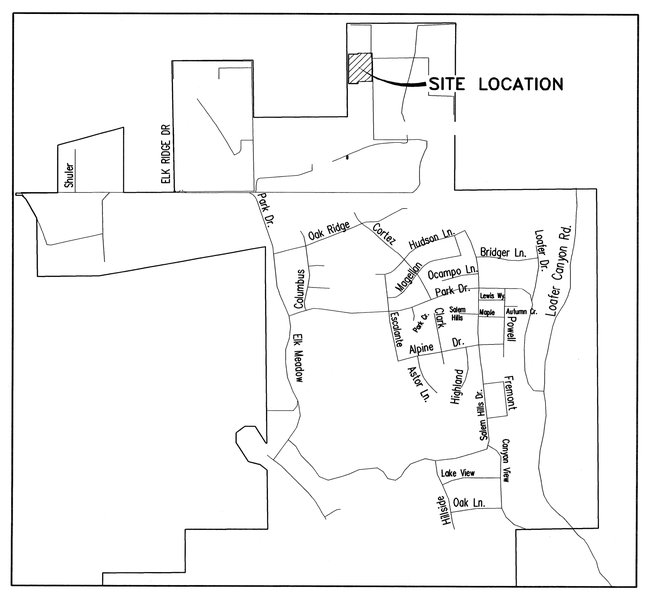

VICINITY MAP
-NTS-

NOTE:
ALL POTABLE WATER IMPROVEMENTS TO COMPLY WITH NSF61. THE DESIGN OF THE DRINKING WATER SYSTEM COMPLIES WITH THE UTAH DIVISION OF DRINKING WATER ADMINISTRATIVE RULE R-309-500-5 DESIGN STANDARDS.

REGISTERED PROFESSIONAL ENGINEER
SCOTT D. PETERSON
No. 362274
9/23/15
STATE OF UTAH

ATLAS ENGINEERING L.L.C.

OWNER/DEVELOPER
ARIVE HOMES
DEAN INGRAM
733 N. MAIN STREET
SPANISH FORK, UTAH
801-318-9569

PHONE: 801-655-0566
FAX: 801-655-0109
95 WEST 200 NORTH #2
SPANISH FORK, UT 84660

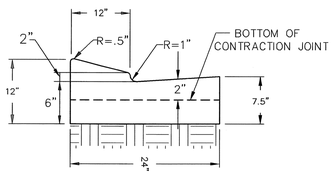

TYPE B-CURB DETAIL

-NTS-

CURVE TABLE					
CURVE	RADIUS	LENGTH	CHORD DIST.	CHORD BRG.	DELTA
C1	15.00	23.51	21.18	S 44°40'09" W	89°47'39"
C2	15.00	23.62	21.25	S 45°19'51" E	90°12'21"

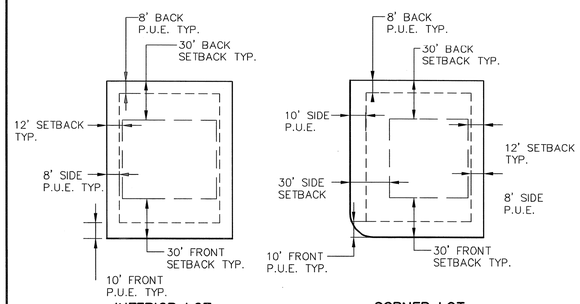

INTERIOR LOT CORNER LOT

DETAIL - TYPICAL BUILDING SETBACK AND EASEMENT

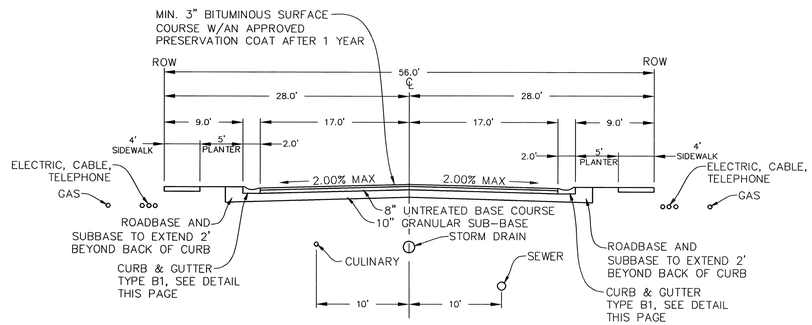

*BASED ON THE REPORT, ONCE TOPSOIL IS STRIPPED, MOST OF THE NATIVE SOILS ARE SUITABLE TO BE USED AS SUB-BASE WHEN PROPERLY SCARIFIED AND COMPACTED. HOWEVER, LEAN CLAYS WERE ENCOUNTERED AT THE WEST SIDE OF THE PROJECT. LEAN CLAYS ARE NOT SUITABLE FOR SUB-BASE AND SHOULD BE REMOVED AND REPLACED WITH SUITABLE SUB-BASE MATERIAL PRIOR TO PLACING UNTREATED BASE COURSE.

DETAIL - TYPICAL 56' RIGHT-OF-WAY STREET SECTION

-NTS-

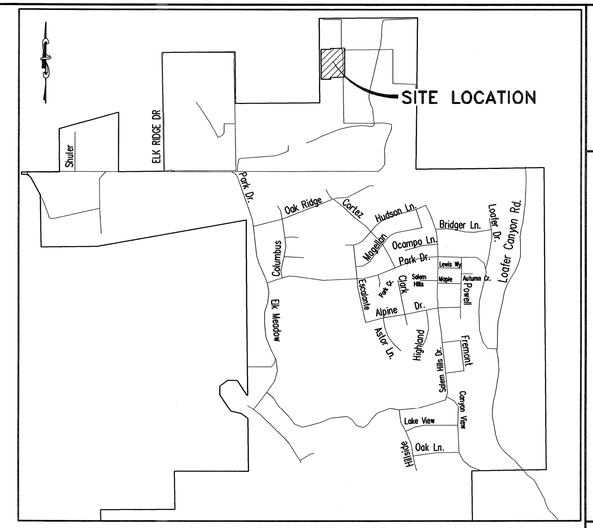

VICINITY MAP

-NTS-

SHEET NO. 2

FINAL PLAN SHEET
SEPTEMBER 2015

ELK RIDGE, UTAH
COUNTY, UTAH

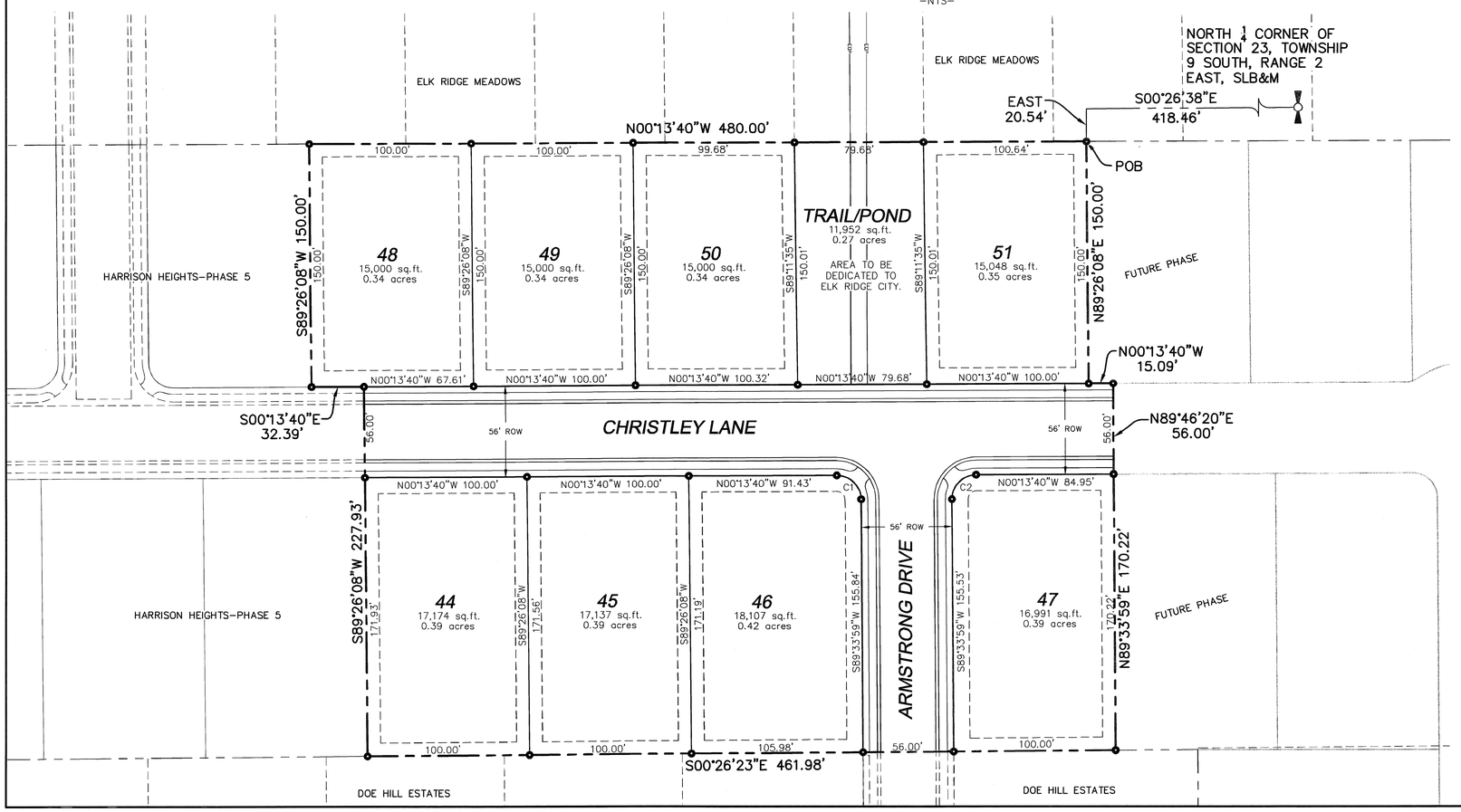

LEGAL DESCRIPTION:

BEGINNING AT A POINT WHICH LIES S00°26'38"E 418.46 FEET ALONG THE QUARTER SECTION LINE AND EAST 20.54 FEET FROM THE NORTH 1/4 CORNER OF SECTION 23, TOWNSHIP 9 SOUTH, RANGE 2 EAST, SALT LAKE BASE AND MERIDIAN;
THENCE N89°26'08"E 150.00 FEET; THENCE N00°13'40"W 15.09 FEET; THENCE N89°46'20"E 56.00 FEET; THENCE N89°33'59"E 170.22 FEET; THENCE S00°26'23"E 461.98 FEET; THENCE S89°26'08"W 227.93 FEET; THENCE S00°13'40"E 32.39 FEET; THENCE S89°26'08"W 150.00 FEET; THENCE N00°13'40"W 480.00 FEET TO THE POINT OF BEGINNING. CONTAINING 4.06 ACRES OF LAND.

OWNER/DEVELOPER
ARIVE HOMES
DEAN INGRAM
733 N. MAIN STREET
SPANISH FORK, UTAH
801-318-9569

0 10 40 120
5 20 80

(24"x36")
SCALE 1" = 40'
(11"x17")
SCALE 1" = 80'

HARRISON HEIGHTS PHASE 7
A SINGLE FAMILY DEVELOPMENT

ATLAS ENGINEERING L.L.C.
PHONE: 801-655-0566
FAX: 801-655-0109
95 WEST 200 NORTH #2
SPANISH FORK, UT 84660

NO.	REVISIONS	BY	DATE
1			
2			
3			
4			
5			
6			
7			
8			
9			
10			
11			
12			

Z:\2013\13-072 Elk Ridge Cleared Ingram\CADD\FINAL\PHASE 7\02-FINAL PLAN.dwg 9/23/2015 3:30:22 PM MDT

SILT FENCE

VEGETATIVE BUFFER

NOTES:
1. UNDISTURBED AREAS OF LOT MAY REMAIN WITH UNCHANGED HISTORICAL DRAINAGE. ANY LOT AREA DISTURBED FOR RESIDENCE, HARDSCAPES, LANDSCAPING, ETC, TO BE GRADED SO RUNOFF DOES NOT LEAVE LOT. THIS MAY REQUIRE THE HOMEOWNER TO CONSTRUCT BERMS AT LOW END OF LOTS. THIS WILL BE REQUIRED OF INDIVIDUAL HOMEOWNERS AT TIME OF CONSTRUCTION.
2. CONSTRUCTION PERIOD BEST MANAGEMENT PRACTICES ARE TO BE INSPECTED AT LEAST WEEKLY, ALSO BEFORE AND AFTER EACH STORM EVENT.
3. DUST CONTROL– CONTRACTOR TO SPRAY CONSTRUCTION SITE WITH WATER AS REQUIRED TO PREVENT AIRBORNE DUST.
4. CATCH BASINS TO HAVE FILTER FABRIC OVER GRATES WITH STRAW WATTLES UNTIL CONSTRUCTION IS COMPLETE.
5. THE DUST, MUD, AND EROSION CONTROL PLAN SHALL BE ADJUSTED AS NEEDED. IF THE CONTROL PLAN DOES NOT FUNCTION AS INTENDED, A REPRESENTATIVE OF THE ELK RIDGE CITY PUBLIC WORKS DEPARTMENT MAY MAKE SUGGESTIONS, BUT THE DEVELOPER/CONTRACTOR SHALL BE FULLY RESPONSIBLE FOR THE EFFECTIVENESS OF THE PLAN AND COMPLIANCE WITH ALL PERMITS AND REGULATIONS.
6. ALL DUST, MUD AND EROSION CONTROL DEVICES SHALL BE CHECKED BY THE CONTRACTOR AS NEEDED. NEEDED CLEANING AND REPAIRS SHALL BE DONE IMMEDIATELY UPON DISCOVERY.
7. ALL STORM DRAIN FACILITIES ON SITE AND ADJACENT TO THE SITE SHALL BE PROTECTED FROM SOIL EROSION FLOWS. INLET PROTECTION DEVICES SHALL BE INSTALLED IMMEDIATELY AS INDIVIDUAL INLETS ARE INSTALLED. ALL PIPE LINES THAT ARE CONNECTED TO THE PUBLIC SYSTEM SHALL BE KEPT FREE OF DIRT AND DEBRIS.
8. EROSION CONTROL METHODS AND STRUCTURES SHALL REMAIN IN PLACE AND SHALL BE MAINTAINED BY THE CONTRACTOR AS LONG AS NEEDED TO PREVENT EROSION.
9. CUT/FILL SLOPES WILL REVEGETATE NATURALLY WITH SEED FROM ADJACENT NATIVE GRASSES. RESEEDING WILL NOT BE REQUIRED.
10. THE CONSTRUCTION OF THIS OVERFLOW NEEDS TO BE COORDINATED WITH ELK RIDGE TO CONSTRUCT AN APPROPRIATE WATER COURSE TO THE POND. INCLUDE A SMALL CUT FILLED WITH RIPRAP ALONG THE FLOW PATH DOWN TO THE POND FOR EROSION CONTROL.

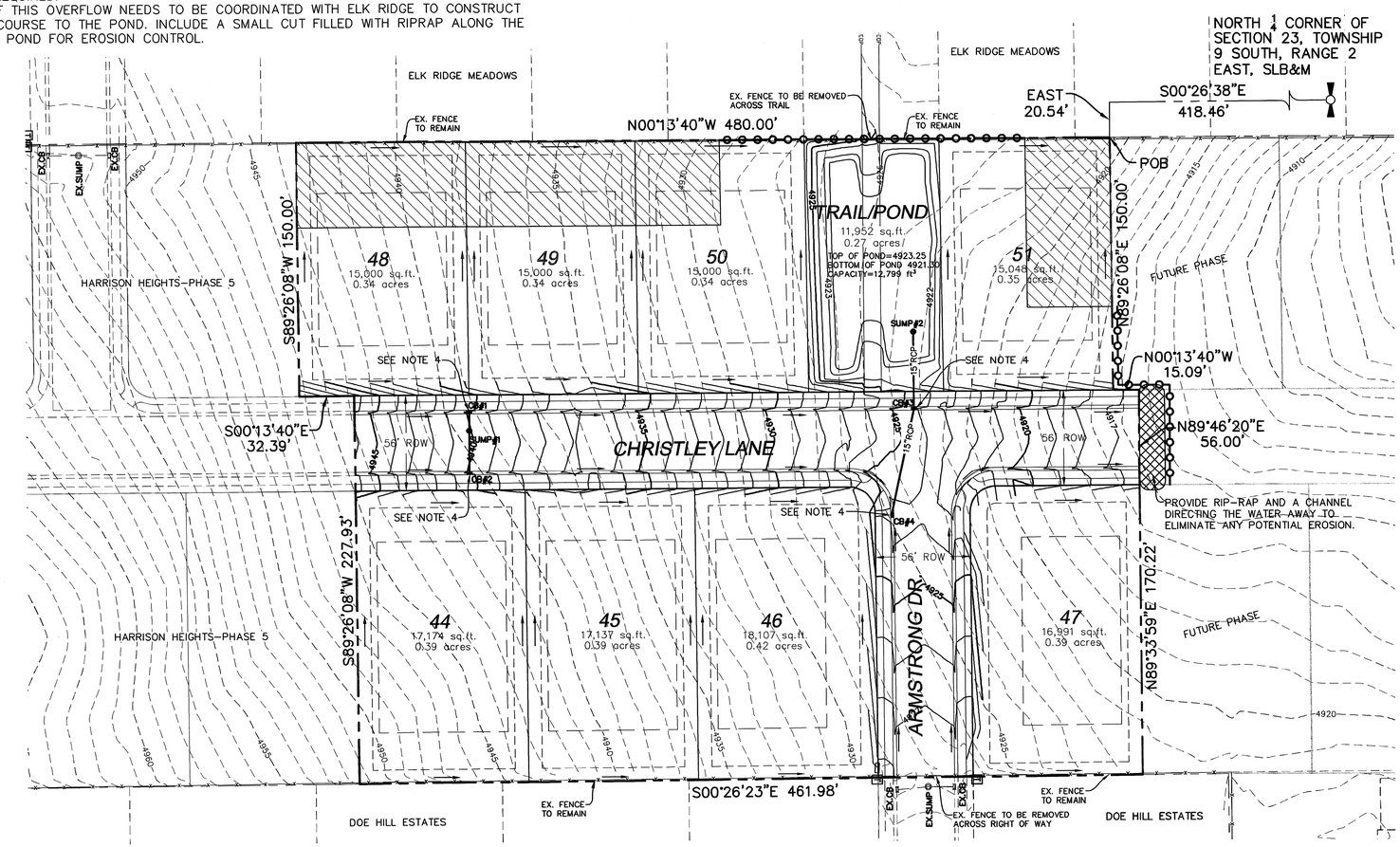

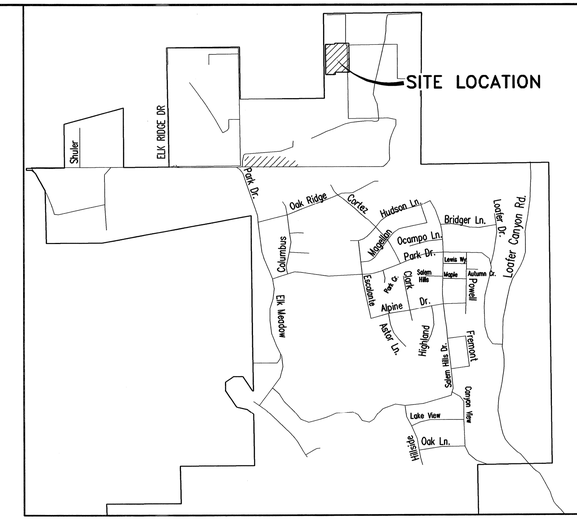

VICINITY MAP
–NTS–

SHEET NO. 3

EROSION CONTROL PLAN SHEET
SEPTEMBER 2015

ELK RIDGE, UTAH
COUNTY, UTAH

HARRISON HEIGHTS PHASE 7
A SINGLE FAMILY DEVELOPMENT

ATLAS ENGINEERING L.L.C.
PHONE:801-655-0566
FAX:801-655-0109
95 WEST 200 NORTH #2
SPANISH FORK, UT 84660

REGISTERED PROFESSIONAL ENGINEER
SCOTT D. PETERSON
No. 362274
9/23/15
STATE OF UTAH

NO.	REVISIONS	BY	DATE
1			
2			
3			
4			
5			
6			
7			
8			
9			
10			
11			
12			

Z:\2013\13-072 Elk Ridge Cleared Ingram\CADD\FINAL\PHASE 7\03-EROSION.dwg 9/22/2015 3:32:26 PM MDT

OWNER/DEVELOPER
ARIVE HOMES
DEAN INGRAM
733 N. MAIN STREET
SPANISH FORK, UTAH
801-318-9569

(24"x36")
SCALE 1" = 40'
(11"x17")
SCALE 1" = 80'

LEGEND

EXISTING POWER POLE	SECTION LINE
PROPOSED STREET LIGHT	EASEMENT
EXISTING FIRE HYDRANT	EXISTING DEED LINE
EXISTING WATER VALVE	EDGE OF PAVEMENT
EXISTING STREET LIGHT	EXISTING OVER HEAD POWER
EXISTING SIGN	EXISTING FENCE LINE
EXISTING MANHOLE	EXISTING SANITARY SEWER W/MANHOLE
PROPOSED FIRE HYDRANT	EXISTING STORM DRAIN W/MH
PROPOSED WATER VALVE	EXISTING WATER
PROPERTY BOUNDARY	PROPOSED SEWER
CENTERLINE	PROPOSED STORM DRAIN
RIGHT-OF-WAY LINE	PROPOSED CULINARY WATER (C900 PVC)
LOT LINE	

NOTES

1. LOCATE AND TIE TO EXISTING 10" CULINARY WATERLINE.
2. EXISTING FENCE TO BE REMOVED ACROSS RIGHT OF WAY.
3. CONSTRUCT FIRE HYDRANT ASSEMBLY PER ELK RIDGE CITY STANDARDS.
4. LOCATE AND TIE TO EXISTING 8" CULINARY WATERLINE.
5. CAP/PLUG & MARK TO SURFACE PROPOSED 10" CULINARY WATERLINE, EXTEND PIPE MINIMUM OF 10' PAST ASPHALT.
6. EXISTING FENCE TO BE REMOVED ACROSS TRAIL.
7. EXISTING FENCE TO REMAIN.
8. INSTALL 10" CULINARY WATER VALVE PER ELK RIDGE CITY STANDARDS.
9. INSTALL 8" CULINARY WATER VALVE PER ELK RIDGE CITY STANDARDS.

0 10 20 40 5 80 120

(24"x36")
SCALE 1" = 40'
(11"x17")
SCALE 1" = 80'

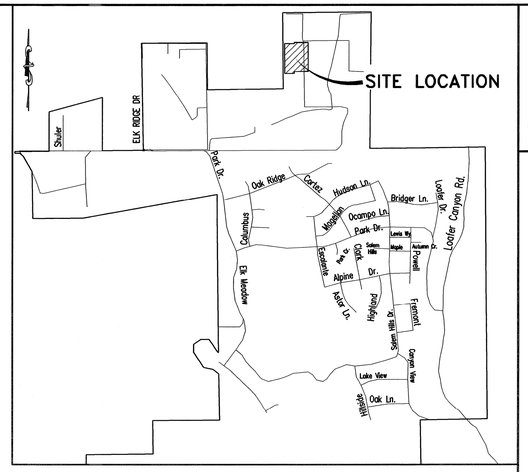

VICINITY MAP
-NTS-

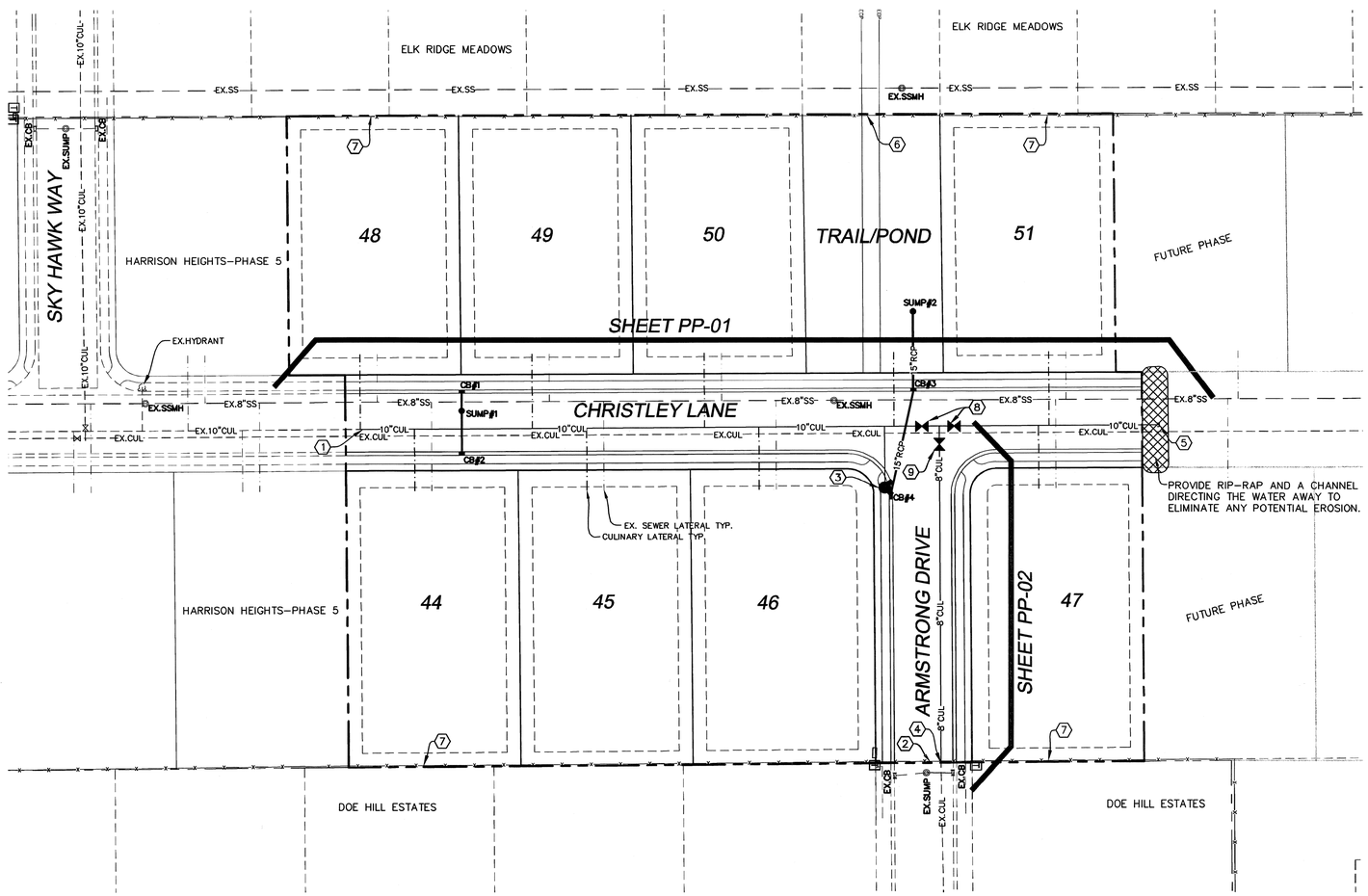

SHEET NO. 4

UTILITY PLAN SHEET
SEPTEMBER 2015

ELK RIDGE, UTAH
COUNTY, UTAH

HARRISON HEIGHTS PHASE 7
A SINGLE FAMILY DEVELOPMENT

ATLAS ENGINEERING L.L.C.
PHONE: 801-655-0566
FAX: 801-655-0109
99 WEST 200 NORTH #2
SPANISH FORK, UT 84660

REGISTERED PROFESSIONAL ENGINEER
SCOTT D. PETERSON
No. 362274
9/23/15
STATE OF UTAH

NO.	REVISIONS	BY	DATE
1			
2			
3			
4			
5			
6			
7			
8			
9			
10			
11			
12			

Z:\2013\13-072 Elk Ridge Cloward Ingram\CADD\FINAL\PHASE 7\04-UTILITY PLAN.dwg 9/22/2015 3:33:33 PM MDT

SILT FENCE

VEGETATIVE BUFFER

NOTES:
1. THERE ARE NO AREAS GREATER THAN 30% SLOPE.
2. IN ORDER TO KEEP PLAN READABLE, DISTURBED AREAS HAVE NOT BEEN HATCHED. THEY ARE DELINEATED BY THE FINISHED CONTOURS.
3. BENCHMARK TO BE NORTH ¼ CORNER OF SECTION 23 AS SHOWN.

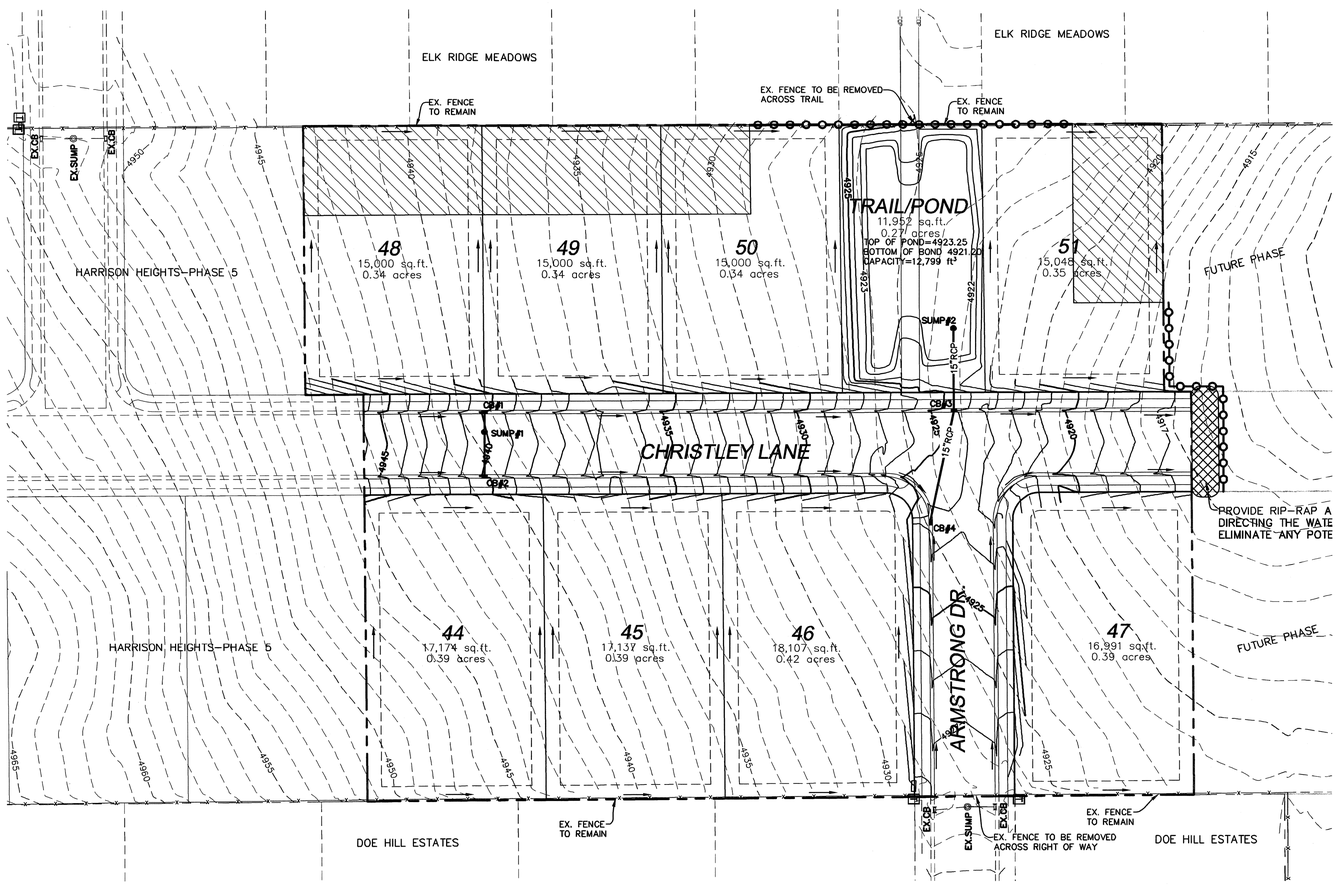

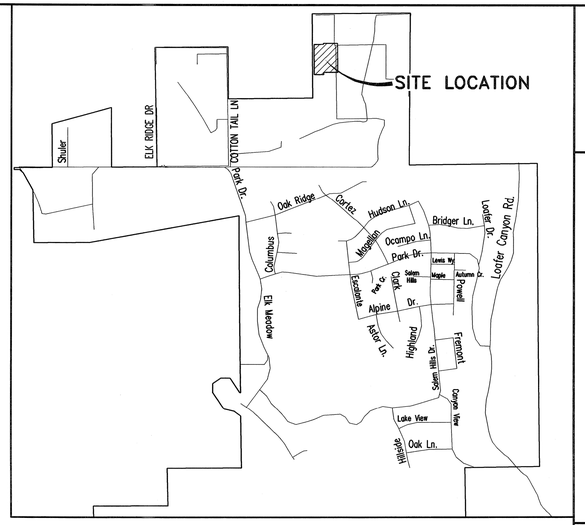

VICINITY MAP
-NTS-

SHEET NO. 5

RE-VEGETATION/RETENTION PLAN
SEPTEMBER 2015

ELK RIDGE, UTAH
COUNTY, UTAH

HARRISON HEIGHTS PHASE 7
A SINGLE FAMILY DEVELOPMENT

ATLAS ENGINEERING L.L.C.
PHONE:801-655-0566
FAX:801-655-0109
95 WEST 200 NORTH #2
SPANISH FORK, UT 84660

REGISTERED PROFESSIONAL ENGINEER
SCOTT D. PETERSON
No. 362274
9/23/15
STATE OF UTAH

OWNER/DEVELOPER
ARIVE HOMES
733 N. MAIN STREET
SPANISH FORK, UTAH
801-318-9569

5 20 80
0 10 40 120

(24"x36")
SCALE 1" = 40'
(11"x17")
SCALE 1" = 80'

NO.	REVISIONS	BY	DATE
1			
2			
3			
4			
5			
6			
7			
8			
9			
10			
11			
12			

Z:\2013\13-072 Elk Ridge Cloward Ingram\CADD\FINAL\PHASE 7\05-REVEGETATION PLANS.dwg 9/22/2015 3:34:36 PM MDT

CURVE TABLE					
CURVE	RADIUS	LENGTH	CHORD DIST.	CHORD BRG.	DELTA
C1	15.00	23.51	21.18	S 44°40'09" W	89°47'39"
C2	15.00	23.62	21.25	S 45°19'51" E	90°12'21"

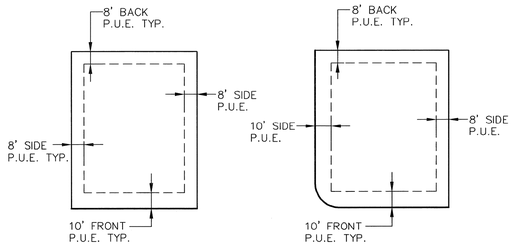

DETAIL - TYPICAL BUILDING SETBACK AND EASEMENT

LEGEND

- CALCULATED POINT
- SET 5/8 REBAR AND CAP
- SET 1/2" PIN
- PROPERTY BOUNDARY
- RIGHT-OF-WAY LINE
- LOT LINE
- SECTION LINE
- EXISTING DEED LINE
- EXISTING STREET CENTERLINE
- 1 — PROPOSED LOT NUMBERS
- 1855 S. — ADDRESS
- SET STREET MONUMENT

5 20 80
0 10 40 120

(24"x36")
SCALE 1" = 40'
(11"x17")
SCALE 1" = 80'

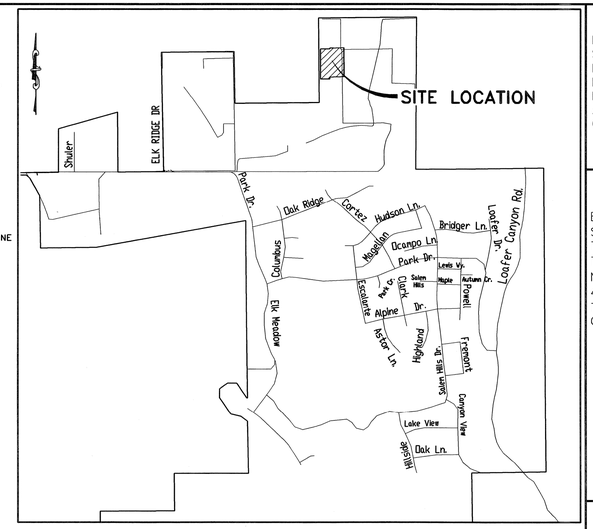

VICINITY MAP
-NTS-

SURVEYORS CERTIFICATE

I, BARRY L. PRETTYMAN DO HEREBY CERTIFY THAT I AM A PROFESSIONAL LAND SURVEYOR, AND THAT I HOLD CERTIFICATE NO. 166406 AS PRESCRIBED UNDER THE LAWS OF THE STATE OF UTAH. I FURTHER CERTIFY BY AUTHORITY OF THE OWNERS, I HAVE MADE A SURVEY OF SAID TRACT OF LAND SHOWN ON THIS PLAT AND DESCRIBED BELOW, AND HAVE SUBDIVIDED SAID TRACT OF LAND INTO LOTS, STREETS, AND EASEMENTS AND THAT THE SAME HAS BEEN CORRECTLY SURVEYED AND STAKED ON THE GROUND AS SHOWN ON THIS PLAT AND THAT THIS IS TRUE AND CORRECT.

DATE

BOUNDARY DESCRIPTION

BEGINNING AT A POINT WHICH LIES S00°26'38"E 418.46 FEET ALONG THE QUARTER SECTION LINE AND EAST 20.54 FEET FROM THE NORTH 1/4 CORNER OF SECTION 23, TOWNSHIP 9 SOUTH, RANGE 2 EAST, SALT LAKE BASE AND MERIDIAN; THENCE N89°26'08"E 150.00 FEET; THENCE N00°13'40"W 15.09 FEET; THENCE N89°46'20"E 56.00 FEET; THENCE N89°33'59"E 170.22 FEET; THENCE S00°26'23"E 461.98 FEET; THENCE S89°26'08"W 227.93 FEET; THENCE S00°13'40"E 32.39 FEET; THENCE S89°26'08"W 150.00 FEET; THENCE N00°13'40"W 480.00 FEET TO THE POINT OF BEGINNING. CONTAINING 4.06 ACRES OF LAND.

OWNER'S DEDICATION

KNOW ALL MEN BY THESE PRESENTS THAT WE, ALL OF THE UNDERSIGNED OWNERS OF ALL THE PROPERTY DESCRIBED IN THE SURVEYOR'S CERTIFICATE HEREON AND SHOWN ON THIS MAP, HAVE CAUSED THE SAME TO BE SUBDIVIDED INTO LOTS, STREETS, AND EASEMENTS AND DO HEREBY DEDICATE THE STREETS AND OTHER PUBLIC AREAS AS INDICATED HEREON FOR PERPETUAL USE OF THE PUBLIC.

IN WITNESS HEREOF WE HAVE HEREUNTO SET OUR HANDS THIS _____ DAY OF _____. A.D. 2015.

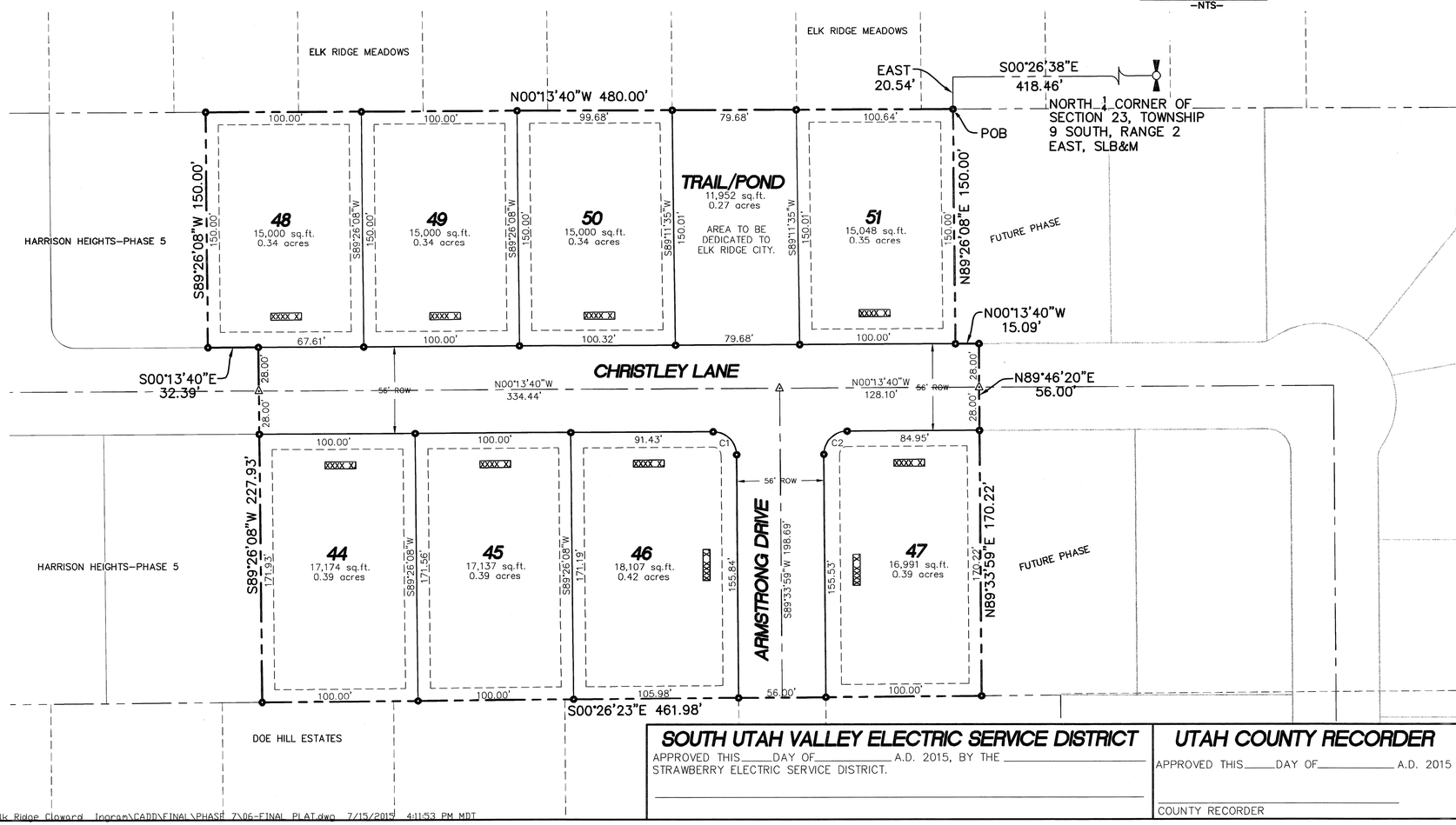

ACKNOWLEDGEMENT

STATE OF UTAH
COUNTY OF UTAH } S.S.

ON THE _____ DAY OF _____, A.D. 2015 PERSONALLY APPEARED BEFORE ME THE SIGNERS OF THE FOREGOING DEDICATION WHO DULY ACKNOWLEDGE TO ME THAT THEY DID EXECUTE THE SAME.

MY COMMISION EXPIRES — NOTARY PUBLIC (SEAL)

LEGISLATIVE BODY

THE CITY COUNCIL OF ELK RIDGE CITY, COUNTY OF UTAH, APPROVES THIS SUBDIVISION AND HEREBY ACCEPTS THE DEDICATION OF ALL STREETS, EASEMENTS, AND OTHER PARCELS OF LAND INTENDED FOR PUBLIC PURPOSES FOR THE PERPETUAL USE OF THE PUBLIC THIS _____ DAY OF _____ A.D. 2015.

CITY RECORDER

PLANNING COMMISION APPROVAL

APPROVED THIS _____ DAY OF _____ A.D. 2015, BY THE _____ PLANNING COMMISSION.

DIRECTOR-SECRETARY — CHAIRMAN, PLANNING COMMISSION

SOUTH UTAH VALLEY ELECTRIC SERVICE DISTRICT

APPROVED THIS _____ DAY OF _____ A.D. 2015, BY THE _____ STRAWBERRY ELECTRIC SERVICE DISTRICT.

UTAH COUNTY RECORDER

APPROVED THIS _____ DAY OF _____ A.D. 2015

COUNTY RECORDER

HARRISON HEIGHTS PHASE 7

A RESIDENTIAL DEVELOPMENT
ELK RIDGE, UTAH COUNTY, UTAH
CONTAINING 8 LOTS AND 4.06 ACRES

SURVEYOR'S SEAL	NOTARY PUBLIC SEAL	CITY ENGINEER SEAL	CLERK-RECORDER SEAL

Z:\2013\13-072 Elk Ridge Cloward Ingram\CADD\FINAL\PHASE 7\06-FINAL PLAT.dwg 7/15/2015 4:11:53 PM MDT

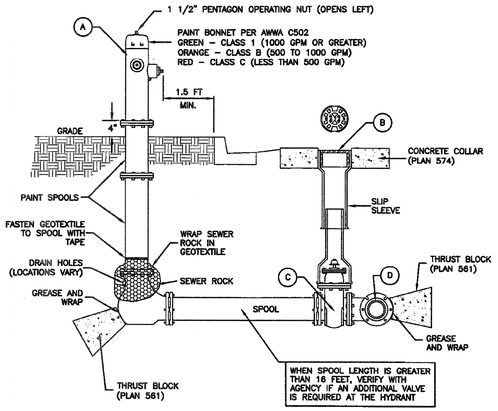

LEGEND			
No.	*	ITEM	DESCRIPTION
A		FIRE HYDRANT	AWWA C502
B		VALVE BOX WITH LID	2-PIECE CAST IRON
C		GATE VALVE WITH 2" X 2" NUT	AWWA C509
D		TEE WITH 125 # FLANGE	AWWA C110

* FURNISHED BY UTILITY AGENCY

SECTION

Fire hydrant with valve

February 2011 237 Plan 511

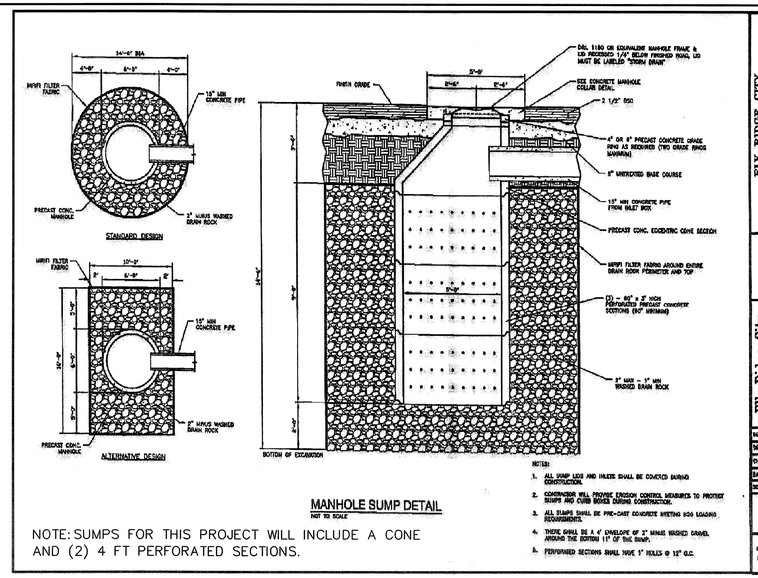

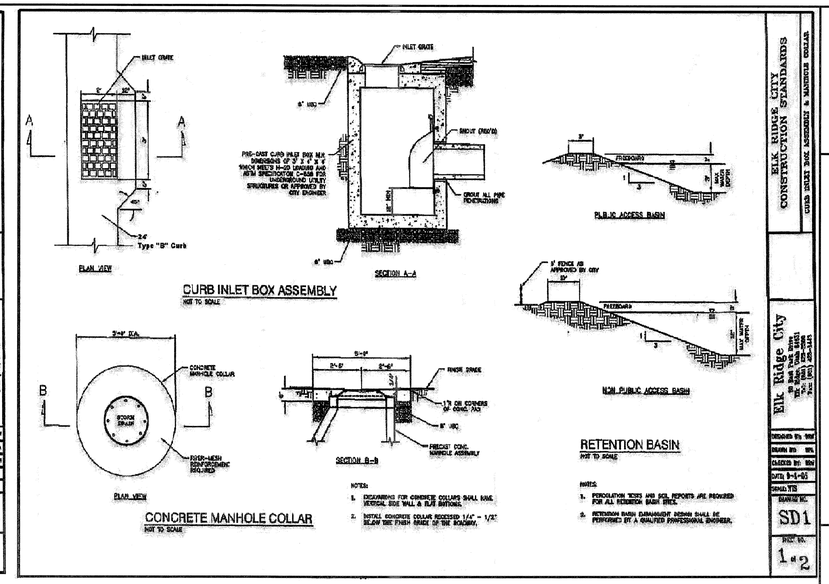

Fire Hydrants: The detail provided in the plan set is not up to date. Please use the attached APWA (2012) detail. The AWWA C502 fire hydrant shall be provided with one (1) 4–1/2" pumper nozzle and two (2) 2–1/2" hose nozzles. Connection shall be via FLxMJ valve to a FL lateral off the main as shown on the detail.
Water Services: All service laterals shall be 1" CTS HDPE SDR 9 with NSF 61 Certification. All meter barrels shall be "white" HDPE. Tapping saddles shall be epoxy coated and double strapped with stainless steel hardware.
Water Valves: All valves shall be FLxMJ connected directly to FL tees and crosses.

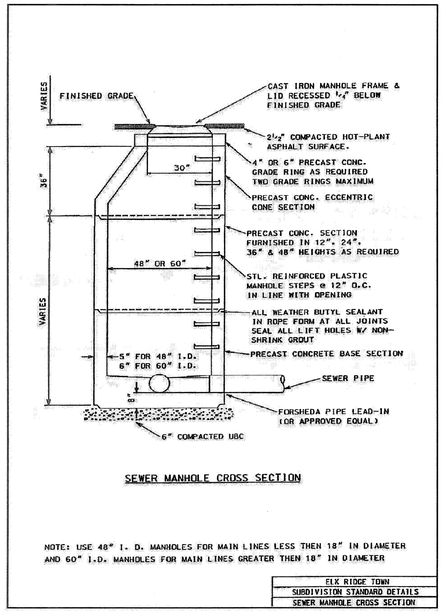

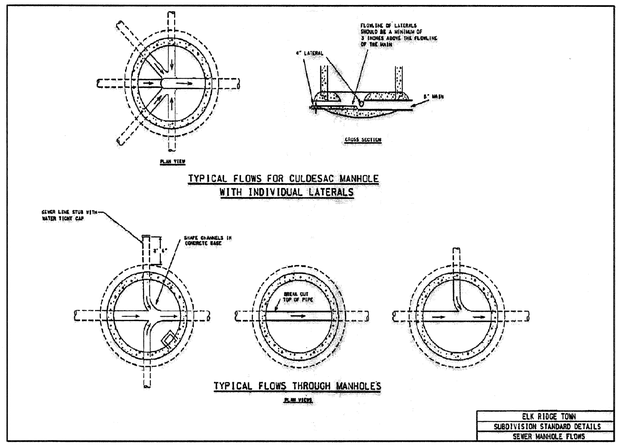

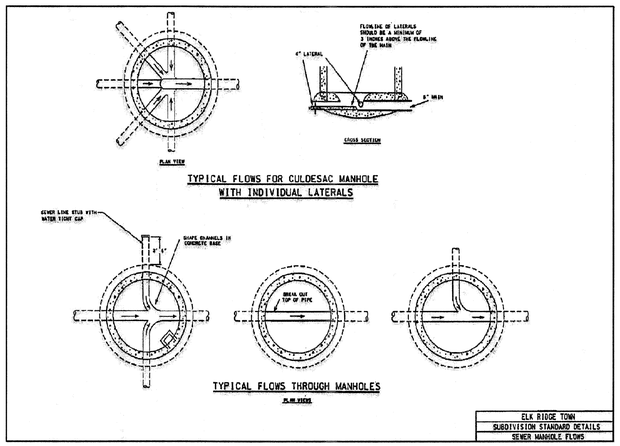

REGISTERED PROFESSIONAL ENGINEER SCOTT D. PETERSON No. 362274 9/23/15 STATE OF UTAH

HARRISON HEIGHTS PHASE 7
A SINGLE FAMILY DEVELOPMENT
ATLAS ENGINEERING L.L.C.
PHONE:801-655-0566
FAX:801-655-0109
995 WEST 200 NORTH #2
SPANISH FORK, UT 84660

NO.	REVISIONS	BY	DATE
1			
2			
3			
4			
5			
6			
7			
8			
9			
10			
11			
12			

Z:\2013\13-072 Elk Ridge Cloward Ingram\CADD\FINAL\PHASE 7\07-DETAIL SHEET.dwg 9/22/2015 3:39:46 PM MDT

SHEET NO. 7

DETAIL SHEET

ELK RIDGE, UTAH
COUNTY, UTAH

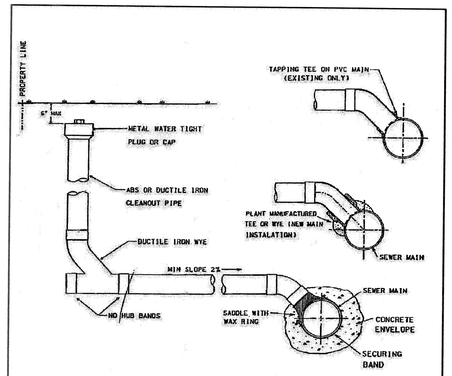

SEWER SERVICE LINE

ELK RIDGE TOWN
SUBDIVISION STANDARD DETAILS
SEWER SERVICE LINE DETAILS

~D~

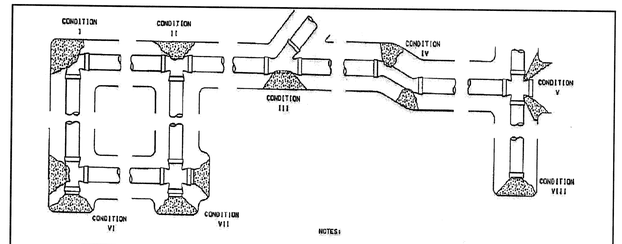

THRUST BLOCK BEARING AREA IN SQUARE FEET								
PIPE SIZE	CONDITION							
	I	II	III	IV	V	VI	VII	VIII
6	11.0	7.8	5.9	3.3	3.9	5.9	11.0	7.8
8	17.5	12.4	9.8	5.2	6.5	9.1	17.5	12.4
10	24.8	17.5	13.6	7.8	9.1	12.3	24.8	17.5
12	33.0	24.0	18.2	9.7	12.3	16.9	33.0	24.0
14	44.0	31.1	23.8	12.1	15.6	23.2	44.0	31.1

NOTES:

1. ALL THRUST BLOCK BEARING FACES SHALL BE POURED AGAINST UNDISTURBED SOIL OR APPROVED COMPACTED BACKFILL.
2. CONCRETE SHALL BE CLASS 564-C-3000
3. THRUST BLOCKS SHALL NOT INTERFERE WITH ACCESS TO THE JOINT.
4. ALL BOLTS ON MECHANICAL JOINT FITTINGS SHALL BE FREE FROM CONCRETE AND FULLY ACCESSIBLE.

THRUST BLOCK DETAILS

ELK RIDGE TOWN
SUBDIVISION STANDARD DETAILS
THRUST BLOCK DETAILS

~K~

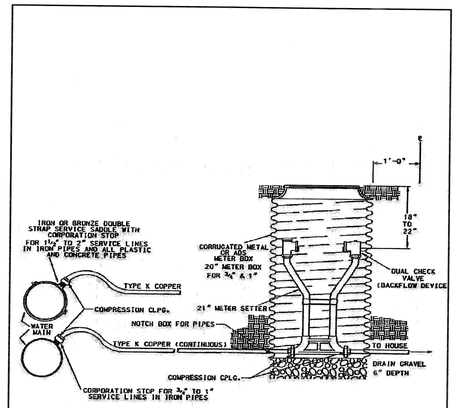

WATER SERVICE LINES AND METER BOX

NOTE: 1½" AND LARGER WATER METER SHALL CONFORM TO STANDARD FOR LARGE METERS.

ELK RIDGE TOWN
SUBDIVISION STANDARD DETAILS
WATER LINE DETAILS

*1" POLY PIPE PER ELK RIDGE CITY, NOT TYPE K COPPER.

~J~

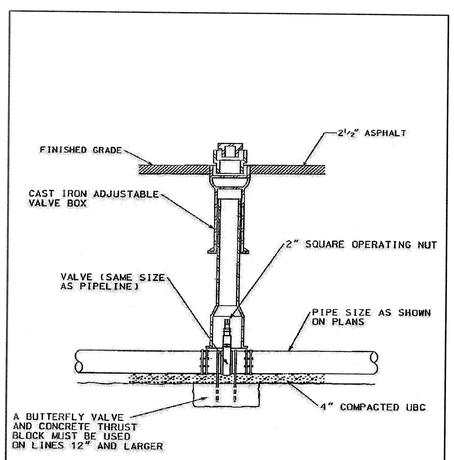

WATER VALVE DETAIL

ELK RIDGE TOWN
SUBDIVISION STANDARD DETAILS
WATER VALVE DETAILS

~I~

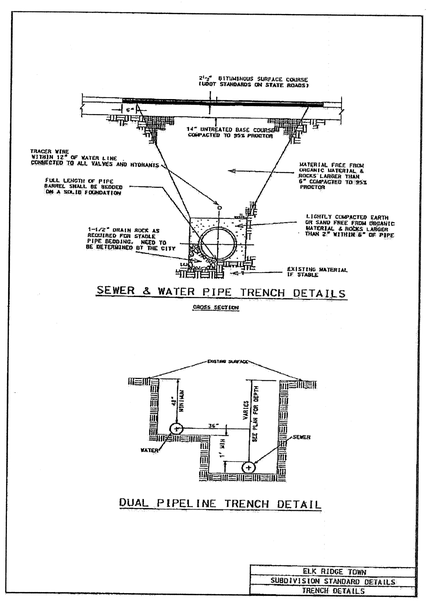

SEWER & WATER PIPE TRENCH DETAILS

CROSS SECTION

DUAL PIPELINE TRENCH DETAIL

ELK RIDGE TOWN
SUBDIVISION STANDARD DETAILS
TRENCH DETAILS

~Q~

Fire Hydrants: The detail provided in the plan set is not up to date. Please use the attached APWA (2012) detail. The AWWA C502 fire hydrant shall be provided with one (1) 4-1/2" pumper nozzle and two (2) 2-1/2" hose nozzles. Connection shall be via FLxMJ valve to a FL lateral off the main as shown on the detail.
Water Services: All service laterals shall be 1" CTS HDPE SDR 9 with NSF 61 Certification. All meter barrels shall be "white" HDPE. Tapping saddles shall be epoxy coated and double strapped with stainless steel hardware.
Water Valves: All valves shall be FLxMJ connected directly to FL tees and crosses.

REGISTERED PROFESSIONAL ENGINEER
SCOTT D. PETERSON
No. 362274
9/23/15
STATE OF UTAH

SHEET NO. 8

DETAIL SHEET

ELK RIDGE, UTAH
COUNTY, UTAH

HARRISON HEIGHTS PHASE 7
A SINGLE FAMILY DEVELOPMENT

ATLAS ENGINEERING L.L.C.
PHONE:801-655-0566
FAX:801-655-0109
95 WEST 200 NORTH #2
SPANISH FORK, UT 84660

NO.	REVISIONS	BY	DATE
1			
2			
3			
4			
5			
6			
7			
8			
9			
10			
11			
12			

Z:\2013\13-072 Elk Ridge Cleaward Ingram\CADD\FINAL\PHASE 7\07-DETAIL SHEET.dwg 9/23/2015 3:39:46 PM MDT

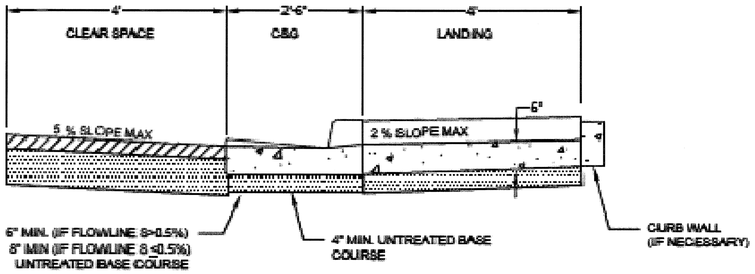

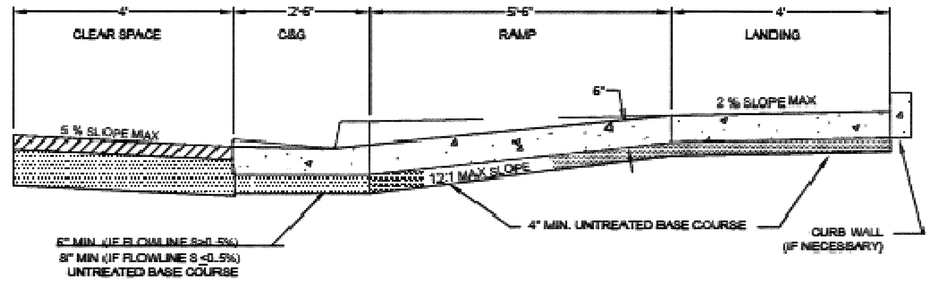

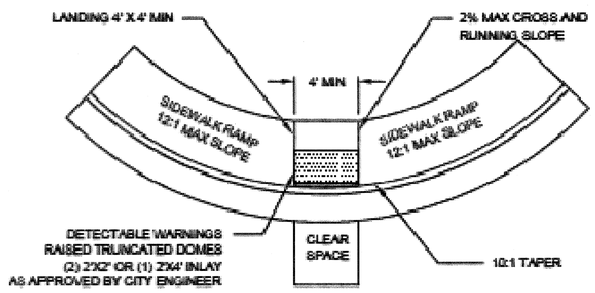

ADA ACCESS RAMP WITHOUT A PARK STRIP

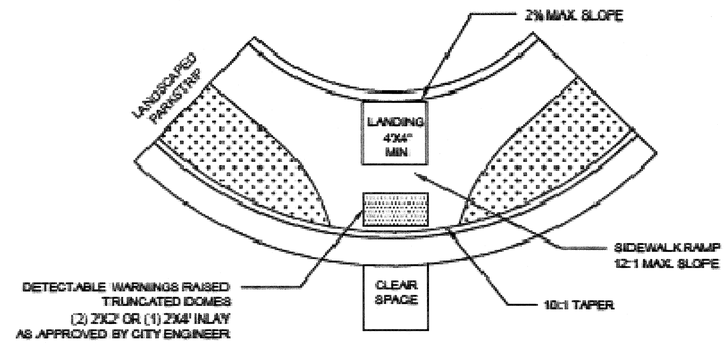

ADA ACCESS RAMP WITH A PARK STRIP

GENERAL NOTES

1. ALL CURB, GUTTER, SIDEWALK AND DRIVE APPROACHES SHALL BE DESIGNED AND STAKED BY A LICENSED ENGINEER OR LAND SURVEYOR AND SHALL SUBMIT A PLAN AND PROFILE DRAWING TO THE CITY ENGINEER FOR APPROVAL.
2. THE CITY ENGINEER WILL REQUIRE A LAYOUT INSPECTION.
3. 24 HR. NOTICE WILL BE REQUIRED FOR ALL CONCRETE INSPECTIONS. THE INSPECTOR MAY TIME FOLLOWING:
   A) DENSITY TESTS
   B) GRADE VERIFICATION
   C) SLUMP TESTS
   D) AIR ENTRAINMENT TESTS
   E) EXPANSION JOINT PLACEMENT
   F) COMPRESSION CYLINDER TESTS
4. CONCRETE
   A) CONCRETE SHALL BE CLASS 4000 AS PER APWA SECTION 03 30 04
   B) CONCRETE SHALL BE 6.5 BAG MIX
   C) SLUMP SHALL BE LESS THAN 4"
   D) AIR ENTRAINMENT SHALL BE 6% +/- 1%
5. CURB AND GUTTER SHALL BE APWA STANDARD PLAN NO. 205 TYPE A.
6. SIDEWALK SHALL ADHERE TO APWA STANDARD PLAN 231. SIDEWALK SHALL BE 5" THICK FOR ALL SIDEWALK IN RESIDENTIAL AREAS AND 5" IN COMMERCIAL. DRIVE APPROACHES SHALL BE 6" THICK FOR RESIDENTIAL AND 8" FOR COMMERCIAL, OR SPECIFIED BY PROJECT ENGINEER.
7. FLARED DRIVE APPROACH SHALL BE APWA STANDARD PLAN NO. 231.
8. WATERWAY SHALL BE APWA STANDARD PLAN NO. 211.
9. REINFORCEMENT STEEL SHALL MEET REQUIREMENTS OF APWA SECTION 03 20 00.
10. SIDEWALK RAMP DETECTABLE WARNINGS SHALL BE RED RAISED TRUNCATED DOMES.
11. SIDEWALK RAMP DETECTABLE WARNINGS SHALL BE 2'X4' INLAYS AND SHALL BE APPROVED BY THE CITY ENGINEER PRIOR TO INSTALLATION.
12. CONCRETE PLACED IN COLD WEATHER CONDITIONS WILL BE PLACED IN ACCORDANCE WITH ACI 306R REQUIREMENTS.

MAXIMUM SLOPES

	RUNNING SLOPE	CROSS SLOPE
LANDING	1:48 (2%)	1:48 (2%)
RAMP	1:12 (8.33%)	1:48 (2%)
CLEAR SPACE	1:20 (5%)	1:48 (2%)

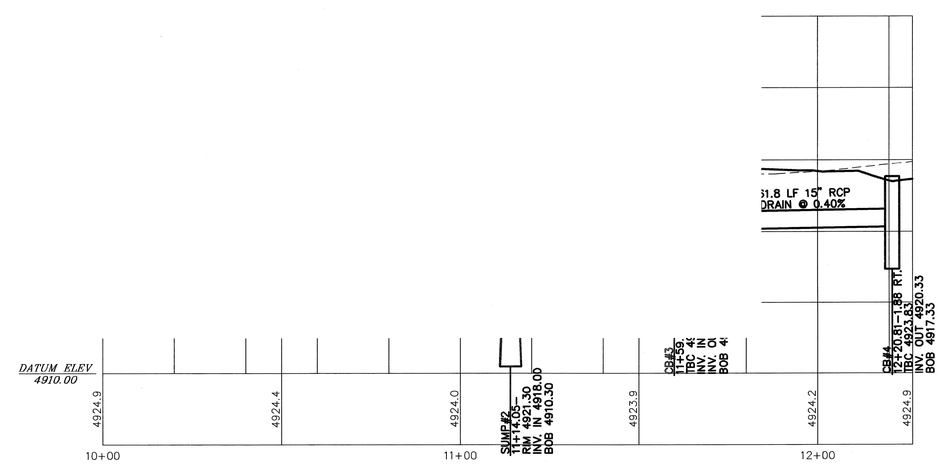

TRAIL/POND DETAIL

REGISTERED PROFESSIONAL ENGINEER
SCOTT D. PETERSON
No. 362274
9/23/15
STATE OF UTAH

SHEET NO. 9

DETAIL SHEET

ELK RIDGE, UTAH
COUNTY, UTAH

HARRISON HEIGHTS PHASE 7
A SINGLE FAMILY DEVELOPMENT
ATLAS ENGINEERING L.L.C.
PHONE: 801-655-0566
FAX: 801-655-0109
95 WEST 200 NORTH #2
SPANISH FORK, UT 84660

NO.	REVISIONS	BY	DATE
1			
2			
3			
4			
5			
6			
7			
8			
9			
10			
11			
12			

Z:\2013\13-072 Elk Ridge Cloverd Ingram\CADD\FINAL\PHASE 7\07-DETAIL SHEET.dwg 9/23/2015 3:39:46 PM MDT

CONSTRUCTION NOTES

1. CONST. FIRE HYDRANT ASSEMBLY PER ELK RIDGE CITY STANDARDS.
2. INSTALL 8" CULINARY WATER VALVE PER ELK RIDGE CITY STANDARDS.
3. CONST. PEDESTRIAN ACCESS RAMP PER ELK RIDGE CITY STANDARDS, 2% SLOPE MAXIMUM ACROSS RAMP.
4. LOCATE AND TIE TO EXISTING 10" CULINARY WATERLINE.
5. INSTALL 10" CULINARY WATER VALVE PER ELK RIDGE CITY STANDARDS.
6. CAP/PLUG & MARK TO SURFACE PROPOSED 10" CULINARY WATERLINE, EXTEND MINIMUM OF 10' PAST ASPHALT.
7. CONST. 10.4 LF 15" RCP STORM DRAIN @ 0.96%
8. CONST. 24.4 LF 15" RCP STORM DRAIN @ 0.40%
9. CONST. 61.8 LF 15" RCP STORM DRAIN @ 0.40%
10. INSTALL (3) OM4-3 SIGNS AT END OF ASPHALT.

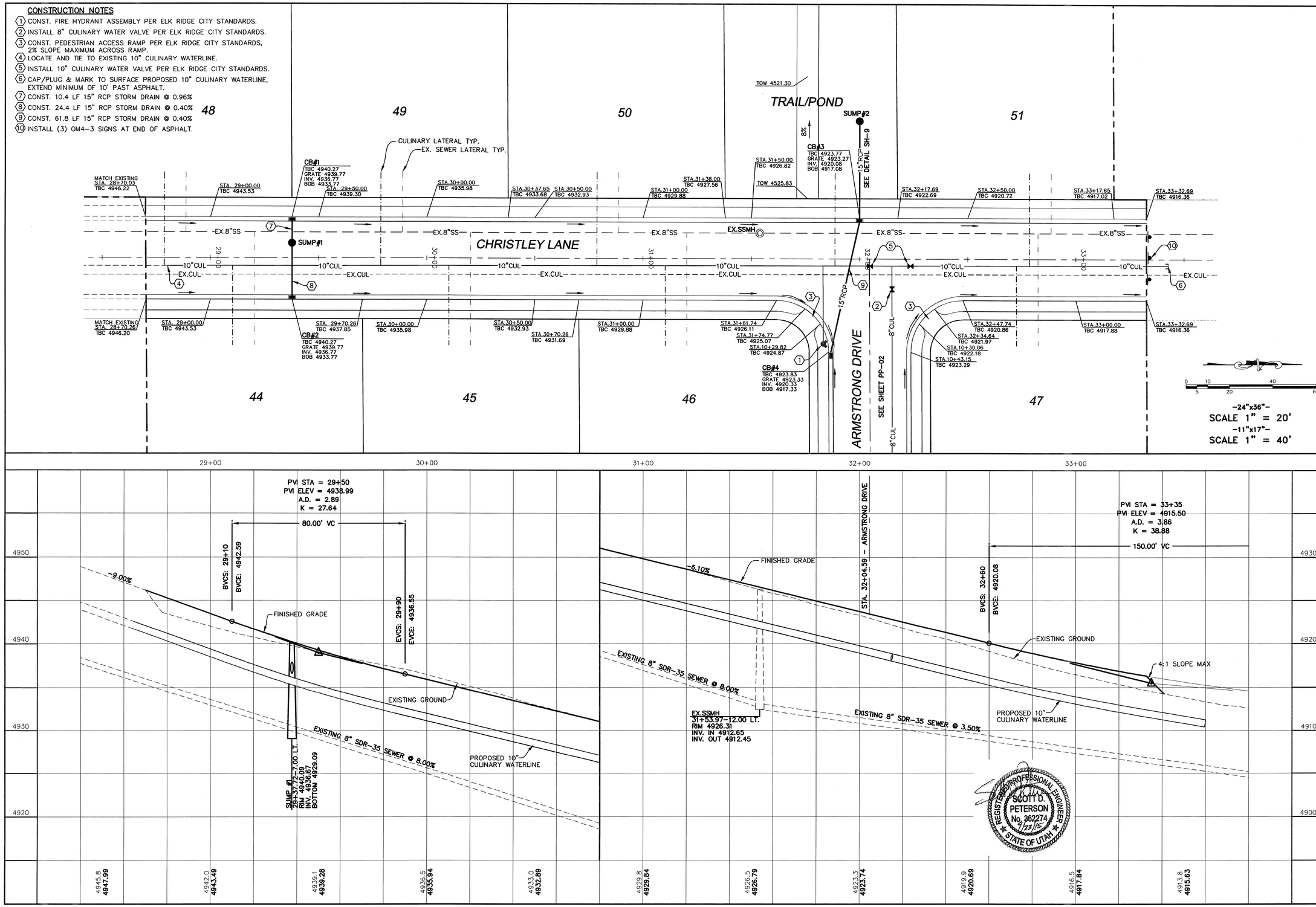

REGISTERED PROFESSIONAL ENGINEER
SCOTT D. PETERSON
No. 362274
7/23/15
STATE OF UTAH

SHEET NO.
PP-01

CHRISTLEY LANE
STA. 28+70.03 TO STA. 33+32.69

STREET PLAN & PROFILE

HARRISON HEIGHTS PHASE 7
A SINGLE FAMILY DEVELOPMENT

ATLAS ENGINEERING L.L.C.
PHONE: 801-655-0566
FAX: 801-655-0109
95 WEST 200 NORTH #2
SPANISH FORK, UT 84660

NO.	REVISIONS	BY	DATE
1			
2			
3			
4			
5			
6			
7			
8			
9			
10			
11			
12			

Z:\2013\13-072 Elk Ridge Cloward Ingram\CADD\FINAL\PHASE 7\PP-01.dwg 7/16/2015 2:02:59 PM MDT

CONSTRUCTION NOTES

1. CONST. FIRE HYDRANT ASSEMBLY PER ELK RIDGE CITY STANDARDS.
2. LOCATE AND TIE TO EXISTING CULINARY WATERLINE.
3. CONST. PEDESTRIAN ACCESS RAMP PER ELK RIDGE CITY STANDARDS, 2% SLOPE MAXIMUM ACROSS RAMP.
4. CONST. 61.8 LF 15" RCP STORM DRAIN @ 0.40%
5. INSTALL 8" CULINARY WATER VALVE PER ELK RIDGE CITY STANDARDS.
6. INSTALL 10" CULINARY WATER VALVE PER ELK RIDGE CITY STANDARDS.

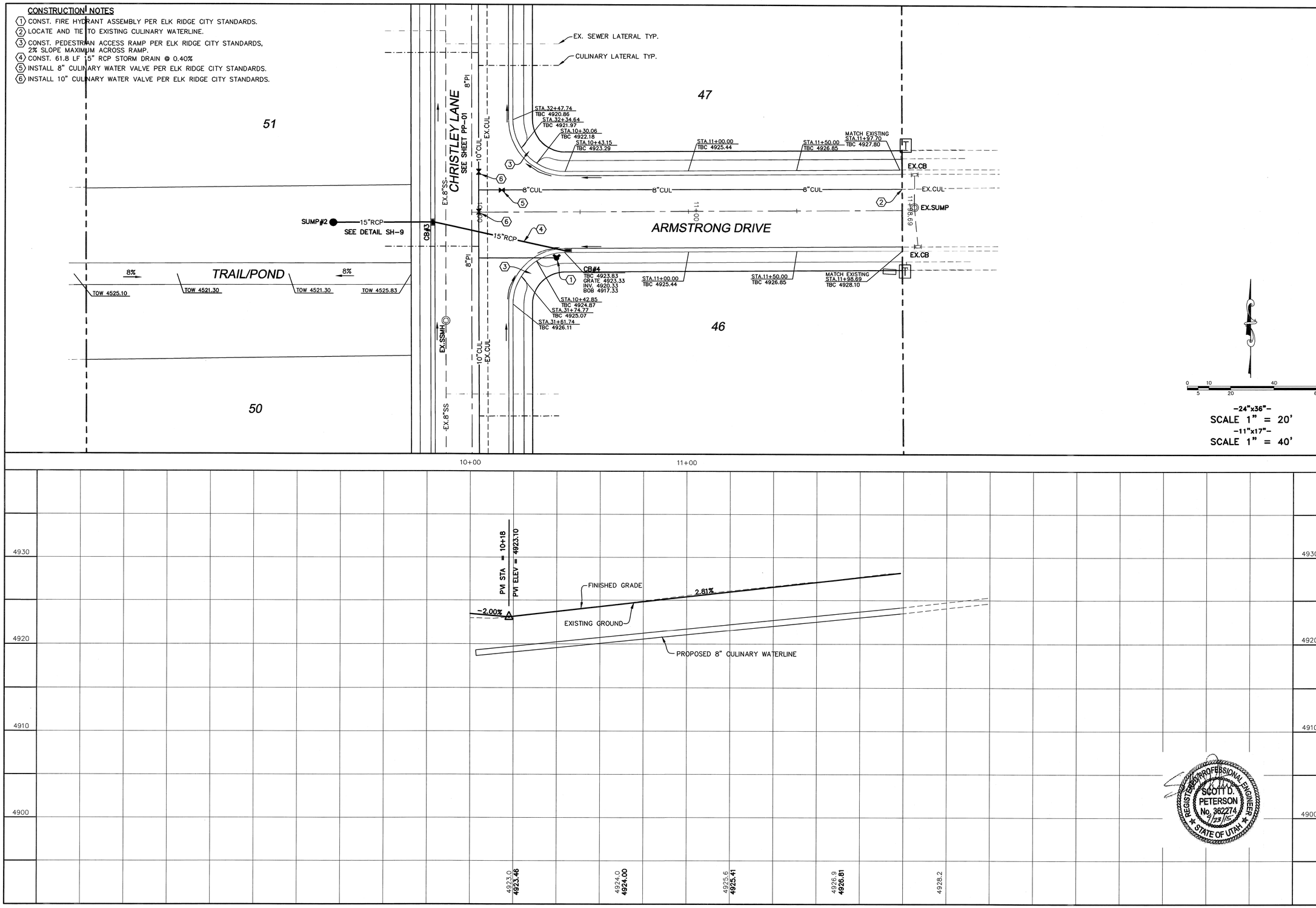

REGISTERED PROFESSIONAL ENGINEER
SCOTT D. PETERSON
No. 362274
9/23/15
STATE OF UTAH

SHEET NO.
PP-02

ARMSTRONG DRIVE
STA. 10+00 TO STA. 11+98.69

STREET PLAN & PROFILE

HARRISON HEIGHTS PHASE 7
A SINGLE FAMILY DEVELOPMENT

ATLAS ENGINEERING L.L.C.
PHONE: 801-655-0566
FAX: 801-655-0109
95 WEST 200 NORTH #2
SPANISH FORK, UT 84660

NO.	REVISIONS	BY	DATE
12			
11			
10			
9			
8			
7			
6			
5			
4			
3			
2			
1			

Z:\2013\13-072 Elk Ridge Cloward Ingram\CADD\FINAL\PHASE 7\PP-02.dwg 7/16/2015 4:58:54 PM MDT