Specialists in Electromechanical and Fluid Management Design

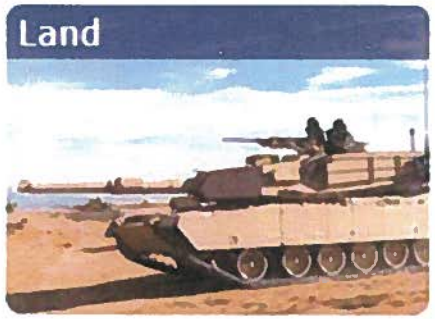

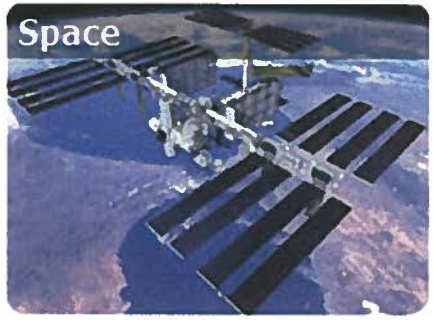

RAM Company

Your Design Solution

RAM COMPANY RAM COMPANY RAM COMPANY

Overview

- Product Lines
- Major Customers
- Design Pedigree
- Engineering and Quality Overview
- Building Overview
- Approvals
- Annual Wage, Employee, Sales, and R&D Growth
- Local Economic Impact
- Looking to the Future

Product Lines

- Solenoids
  - Pressurized
  - Non-Pressurized
  - Push, pull
  - Rotary
  - Proportional
  - Extreme Environments
  - Latching
- Pressure Switches
- Valves
  - Check & Relief
  - Solenoid Operated
    - 4-Way
    - 3-Way
    - 2-Way
    - Pilot Operated
- Manifolds
  - Multiple Solenoid Valve Manifold Bank

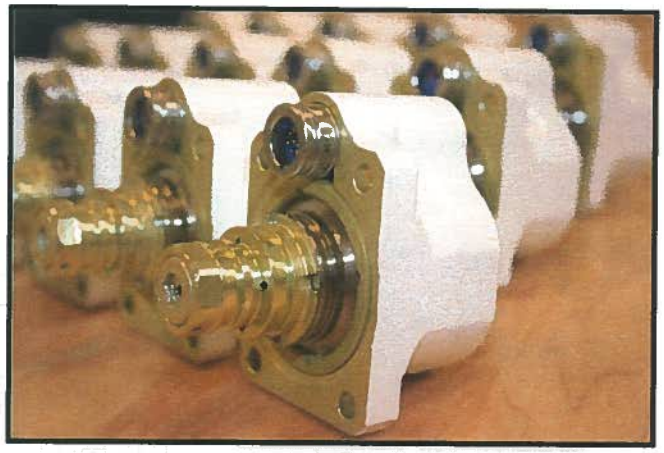

Specialty Solenoids

- Linear Solenoids, Push/Pull
- Extreme life rotary solenoids, 100 million cycles
- Magnetic latching
- Position indication
- Mechanical detents
- Manual override
- Hall effect sensors
- Multiple coils
- Proportional solenoids

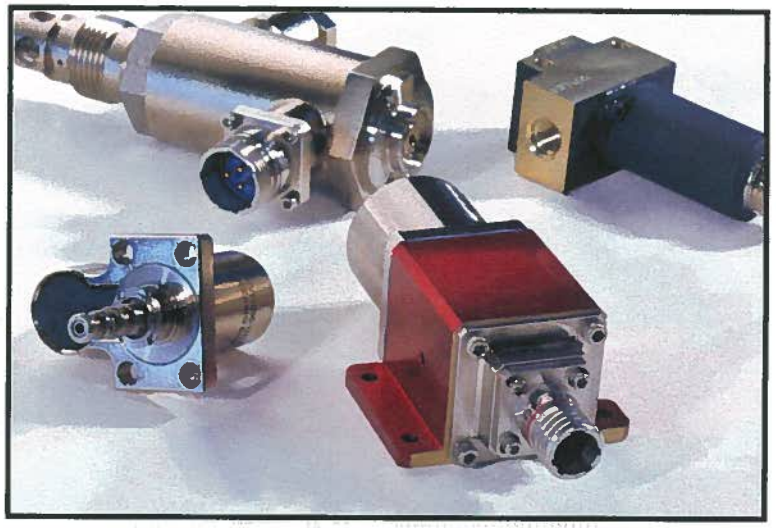

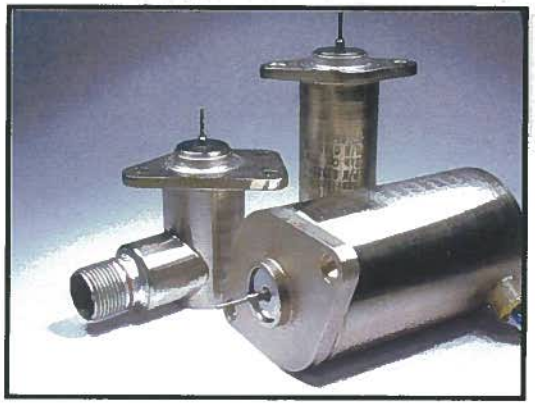

Rotary Solenoids & Butterfly Valves

- Capable of 100 million cycles
- Balanced armature, impervious to shock
- Fast response time
- Bi-directional (permanent magnet latching)
- Proportional movement
- Valves capable of pressures up to 10 PSIG
- 1”, 1 ½”, 2”, and 3” standard butterfly valves.

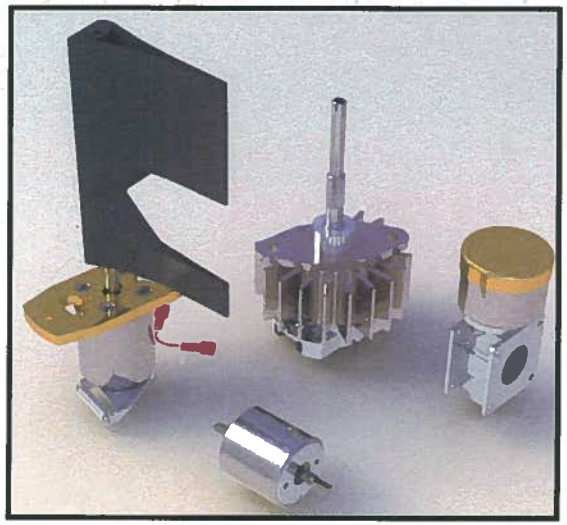

Hydraulic Valves

- Hydraulic Manifolds
- Miniature Solenoid valves (3 Way, 2 position and 2 Way, 2 position)
- Cartridge, inline and coaxial valve constructions
- Up to 5,000 PSI operating pressure.
- Fast Response Time, under 20 mS
- Low leakage, less than 1 cc/Hr
- Standard EB welded designs to reduces parts and eliminates o-rings
- 1 and 2 ball designs allow the option of normally closed or open with the same solenoid design

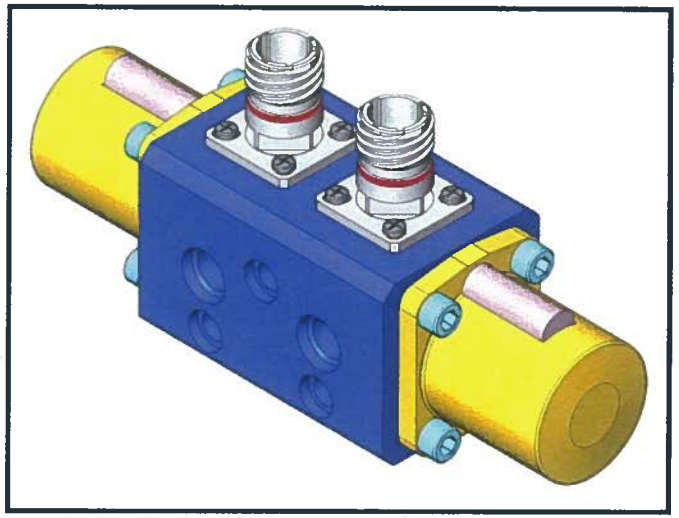

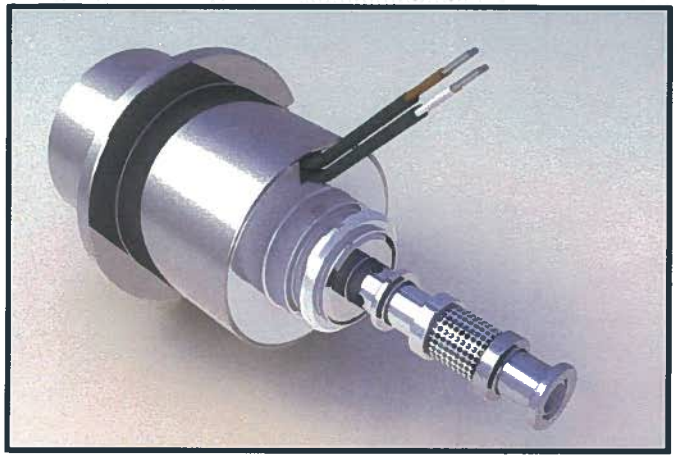

Space-X

Crew Dragon Active Pressure Control Latching Solenoid Valve

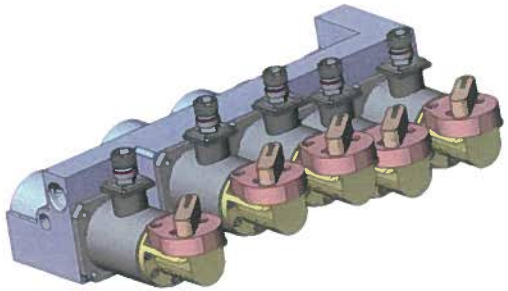

51SV11352

Elon Musk Unveiling the Dragon V2

Space Exploration Technologies Corporation (or SpaceX) was founded in 2002 by Elon Musk. SpaceX specializes in space transportation services and is headquartered in Hawthorn, California. The company has developed two launch vehicles, the Falcon 1 and Falcon 9, and the Dragon Capsule, which initially only took cargo into space, but is planned as a transportation vehicle for astronauts, initially transporting to the International space station (first manned flight is planned for 2016). SpaceX currently employs around 4,000 people, and two of its founding goals are to create reusable rockets and to eventually colonize Mars.

The Dragon Capsule is a spacecraft that is launched into orbit by the Falcon 9 rocket. It is reusable to some degree, and is the first privately built spacecraft to be successfully recovered from orbit. In May of 2014, Elon Musk unveiled the Dragon V2, the planned crewed version of the Dragon, which will carry up to seven astronauts.

RAM's 1352 are to be used for pressure control of the Dragon crew cabin. The Cabin Vent Latching Valves are required to vent cabin air overboard when commanded opened, and to isolate the cabin from the vacuum of space when commanded closed.

Embraer E2: ***Hydraulic Check and Relief Valves***

RAM P/N's V11346-001 and RV11347-001

The Embraer E2 Series represents the second generation of the Embraer E-Jet family, and is comprised of the E175, E190, and E195. These variants seat between 80-144 passengers and will compete directly with the Bombardier C-Series. These narrow-body, twin-jet, medium-range airliners are scheduled for first delivery in 2018. First developed in 2011, Embraer's first customer for the E2 was St. George-based Sky West Airlines, with a commitment for 100 planes. Embraer now has commitments for over 300 planes, and that total is growing.

RAM's 1346 and 1347 are hydraulic check and relief valves that are found in multiple locations throughout these aircraft. Check and relief valves only flow one way, and as the pressure builds within a system, at a certain point, the valves crack and let hydraulic fluid through to relieve that pressure to a certain degree.

Bombardier C-Series, Mitsubishi MRJ, Irkut MS-21, Embraer E2, Airbus A320 Neo: ***Pratt and Whitney PW1000G PurePower Engines, Fuel Metering Valves***

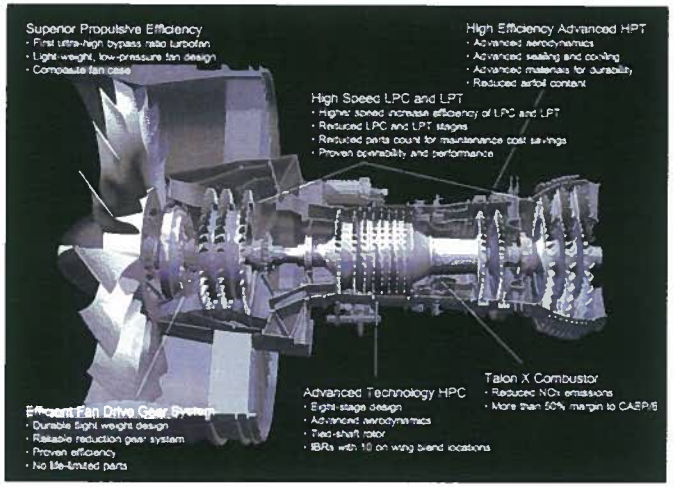

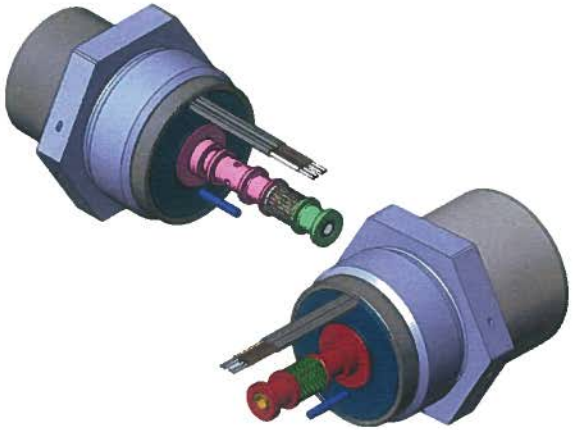

RAM P/N's 30SV11235 and 30SV11236

The Bombardier C-Series is a family of twin-engine, mid-range, narrow body jets that seat between 110-135 people. Bombardier claims the new C-Series will burn 20% less fuel than its competition.

The Mitsubishi MRJ is a passenger jet aircraft, which seats 70-90 people. It is the first airliner designed and manufactured domestically in Japan since the 1960's, and is scheduled to take its maiden flight in 2013.

The Irkut MS-21 is a series of three twin engine, short and mid-range aircraft, seating between 150-212 passengers. Initial deliveries are currently scheduled for 2017.

The Embraer E2 Series represents the second generation of the Embraer E-Jet family, and is comprised of the E175, E190, and E195. These variants seat between 80-144 passengers and will compete directly with the Bombardier C-Series.

The Airbus A320 Neo is the latest version of the extremely popular A320 series, and includes the latest versions of the A319, A320, and A321. These aircraft seat between 124 and 236 people, and will offer 15% increased fuel efficiency over the older models.

RAM's 1235 and 1236 are fuel metering valves found in the PW1000G or PurePower (NGPF) engine. The Purepower engine is a multi-platform , high bypass, geared turbofan jet engine. It is the primary engine on the C-Series, MRJ, and G2 aircraft, and is an option on the MS-21 and A320 NEO. The geared turbofan design has a reduction gearbox between the fan and the shaft. This allows the shaft to run at a higher rotational speed, which in turn enables fewer stages to be used on the turbine and compressor. This system requires less fuel, saving 10-15% in fuel costs over the course of a normal flight.

Major Customer Listing

- More than 35 key customers in 2015
- Top customers in terms of sales in 2014
  - Parker Aerospace (4 sites)
  - Meggitt (3 sites)
  - Post Office
  - Honeywell (4 sites)
  - BE Aerospace
  - Triumph (3 sites)

Commercial Aircraft

- Boeing 700 Series
- Airbus 300 Series
- Gulfstream G650
- Bombardier C-Series
- Embraer 170/190
- Cessna

Commercial Engines

- PW 500
- Europrop TP400
- Trent 500
- Trent 900
- Trent 1000
- Trent XWB
- GE90
- BR725

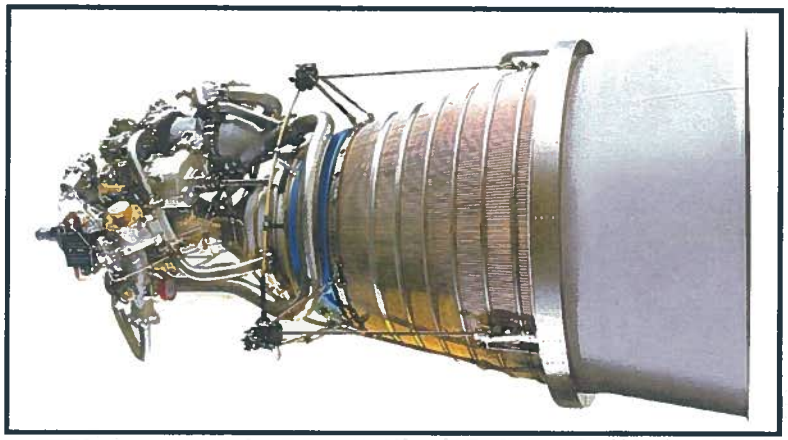

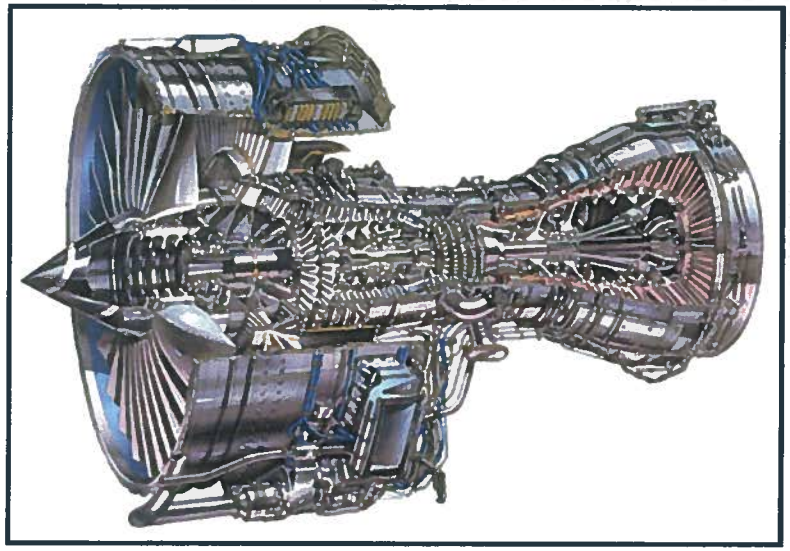

Commercial & Marine Equipment

- Mail sorting
- Engine brakes
- Submarines
- Oil rigs
- Ships

Engineering Capabilities

- Engineering:
  - 1 Chief Engineer
  - 3 Senior Design Engineers
  - 5 Project Engineers
  - 2 Designer / Drafters
- Manufacturing:
  - 3 Manufacturing Engineers
  - 1 Tooling Designer
- Proto Machine / Lab
  - 3 Technicians
  - 3 Machinists
    - 2 CNC Lathe
    - 1 CNC Mill
    - 2 Manual Mills
    - 2 Manual Lathes
    - 1 Grinder
    - 1 Hone
    - 1 Wire EDM

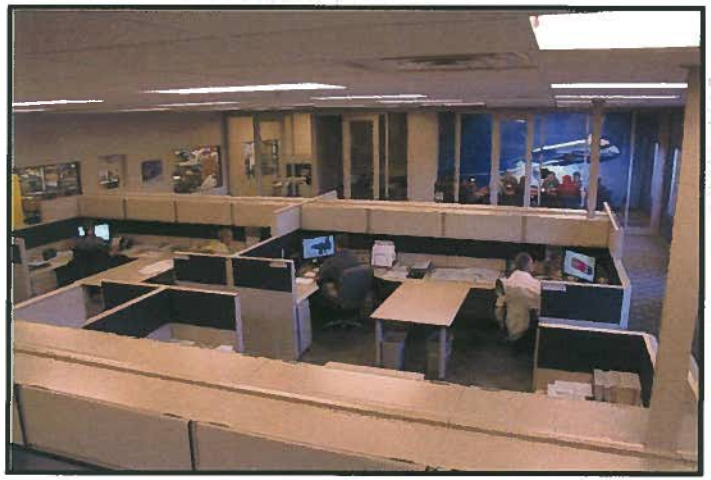

Quality Assurance & Inspection

- Quality Assurance
  - 1 Q.A. Manager
  - 2 Quality Engineers
  - 2 Specialist
  - 1 Support
- Inspection
  - 1 QC Manager
  - 1 Calibration Specialist
  - 11 Inspectors
    - 4 Optical Comparators
    - 1 Digital Optical Comparator
    - 1 CMM
    - In-Process and Final Inspection Locations.

Specializing in Electromechanical Design

RAM COMPANY RAM COMPANY RAM COMPANY

Modern 55,000 Square Foot Facility

435-673-4603 3172 E. Deseret Drive South, St. George, Utah USA www.ramcompany.com

Machine Shop

- 34 total CNC Machines
  - 17 with live tooling and multiple spindles
  - 1 Mazak Integrex (9-axis)
  - 3 Mazak Multiplex (two-turret)
  - 5 Swiss-screw type
- Support machines include:
  - 3 HAAS office lathes
  - 1 HAAS office mill
  - 1 Extrude Hone
- Brazing to AWS-C 3.5, 3.6 (Silver, Copper & Nickel)
- Zinc Die-Casting

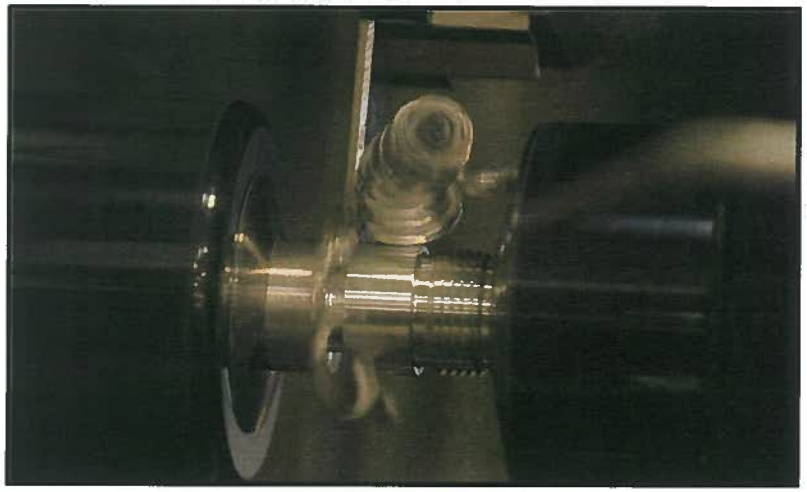

Approvals

Parker

ANAB ACCREDITED

ISO9001 CERTIFIED

Accredited Nadcap™

REGISTERED AS 9100

Thank You For Your Time

Average Annual Wage Growth 2005-2014

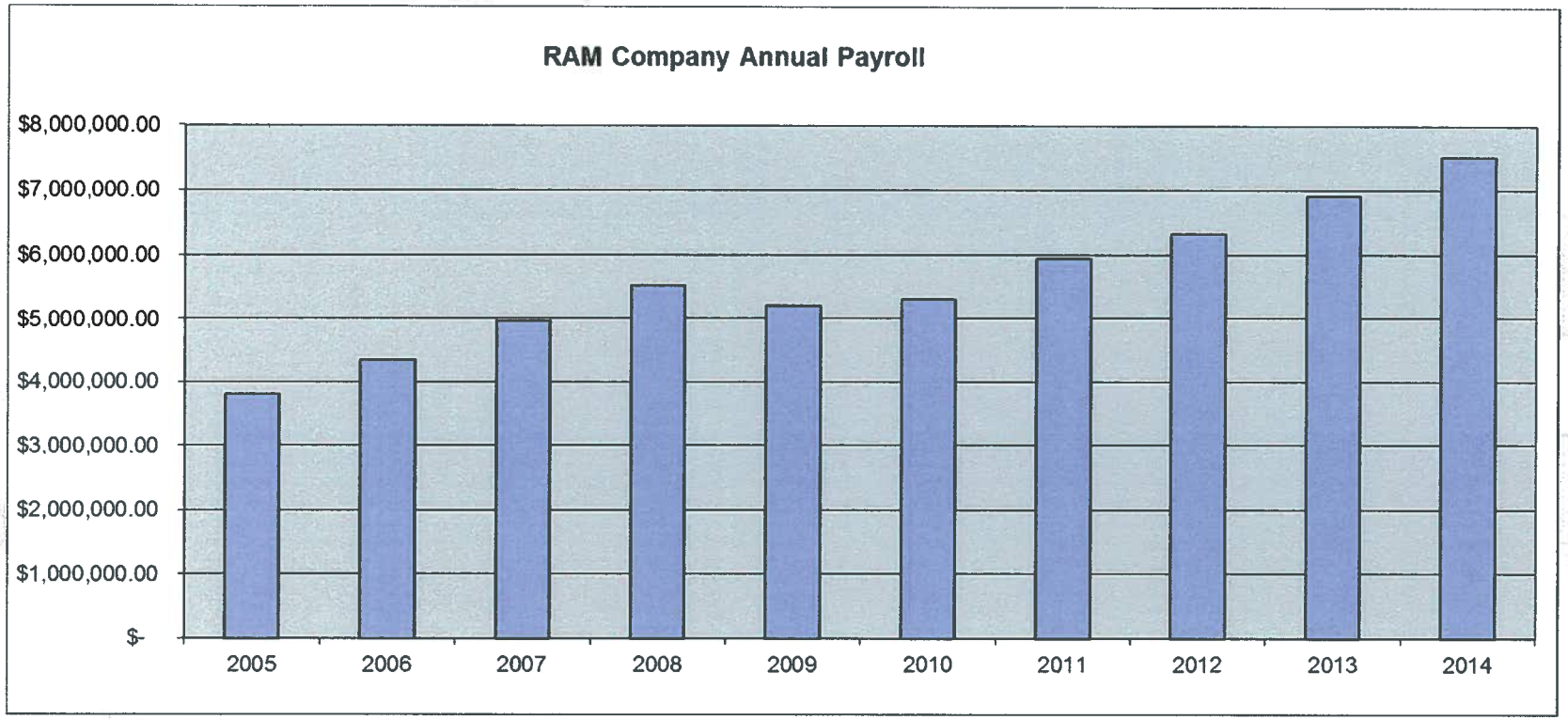

Average Annual Wage Growth 2005-2014

- Cumulative payroll exceeds $55,000,000 (2005-2014).
- Direct employee count rose from 107 in 2005 to 195 in 2014.
- Average wage was $17.12 in 2005. $18.51in 2014.

RAM Employee Benefits

- In addition to average wage of $18.51 per hour, RAM pays an average of $7.16 per hour in benefit pay.
  - Qualified 401k with match.
  - Paid health and dental for employee with options for family plans.
  - Holiday pay and bonuses.
  - Life insurance plan.
  - Paid vacation.
  - Bereavement.

Projected Employee Growth 2015-2025

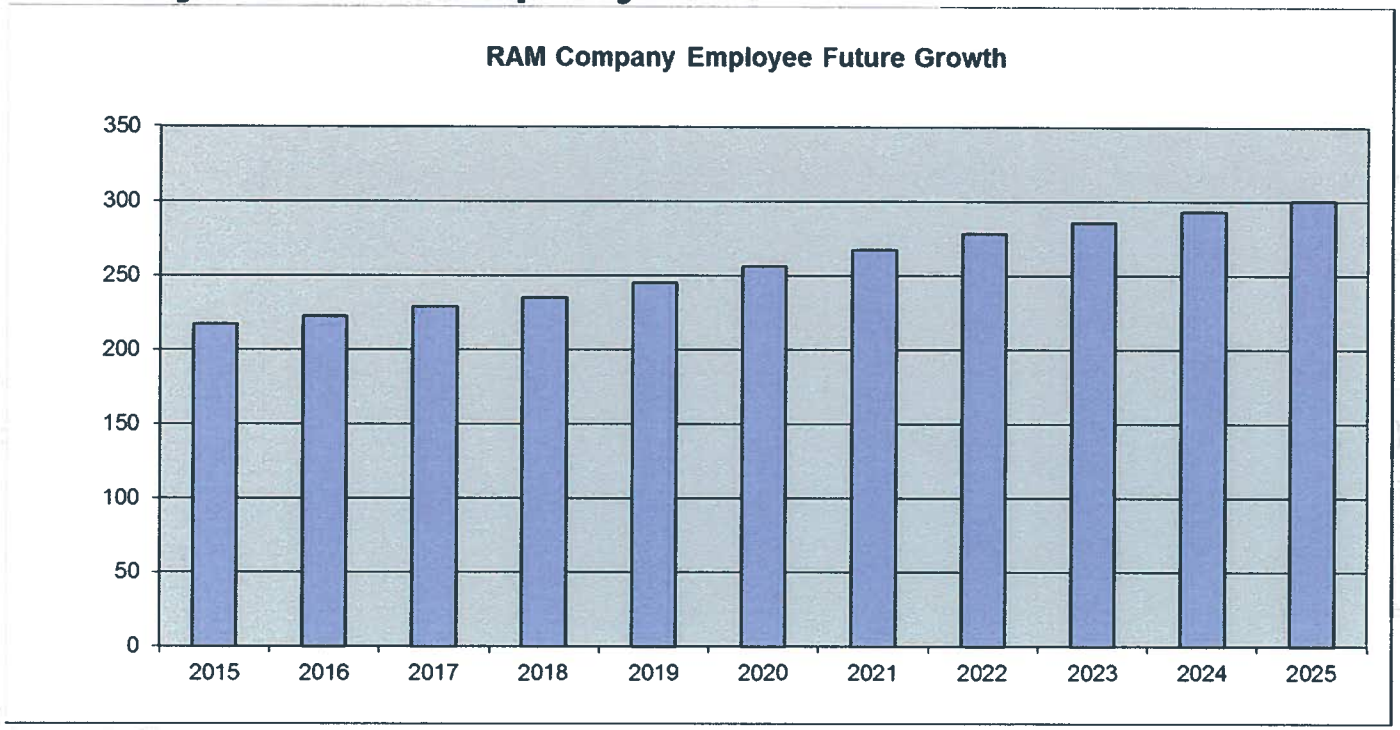

- 4-8% annual job growth CY2015 to CY2025
- Over 100 new jobs between CY2014 and CY2025

Annual Sales, 2005-2014

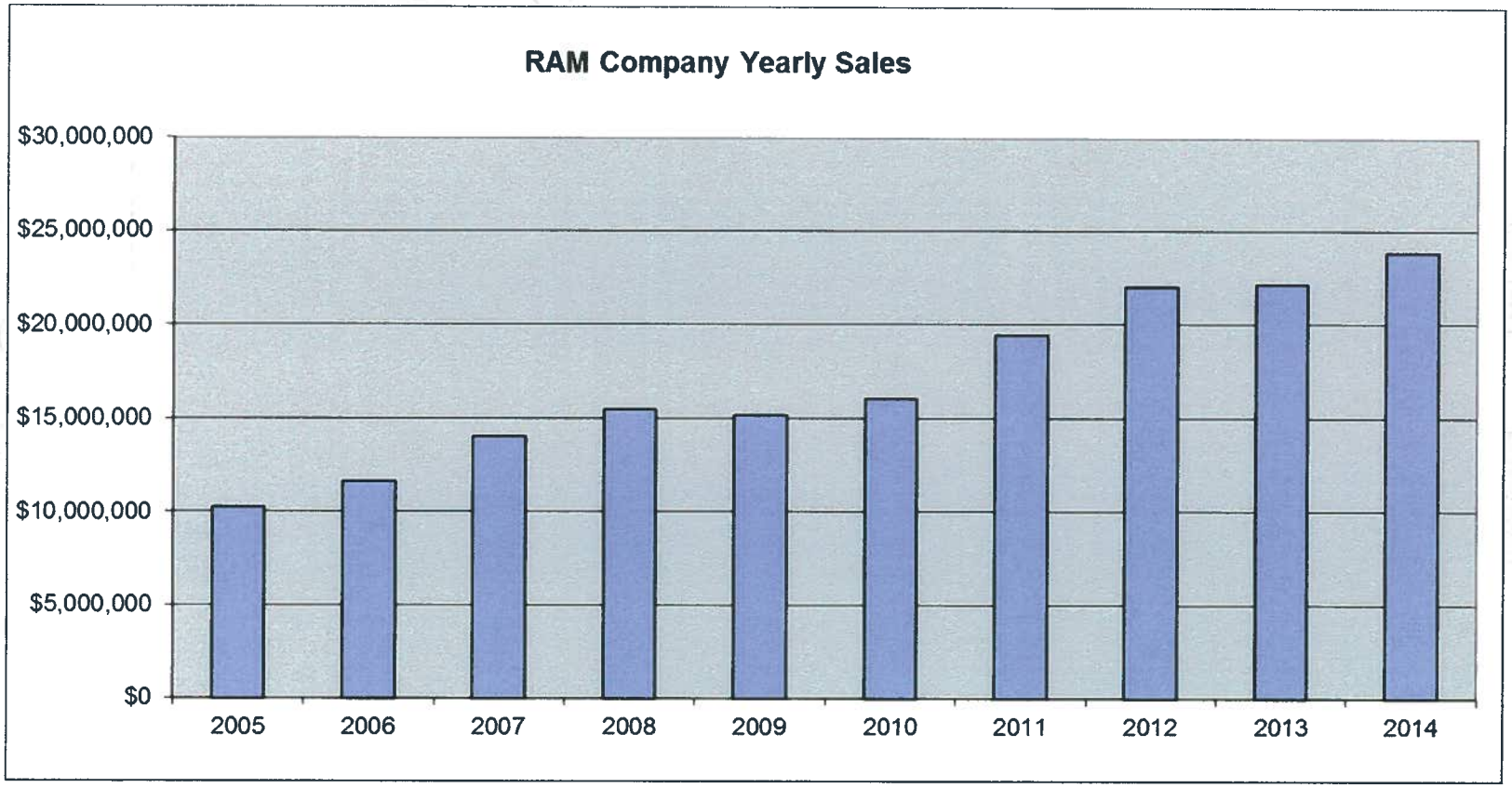

Annual Sales, 2005-2014

- Cumulative sales from 2005-2014 equates to $170MM (up 281% from the previous ten years).
- 2015 projected sales of $25MM.
- RAM expects yearly sales to grow at roughly 8% per year for the next ten years.

Projected Annual Sales, 2015-2025

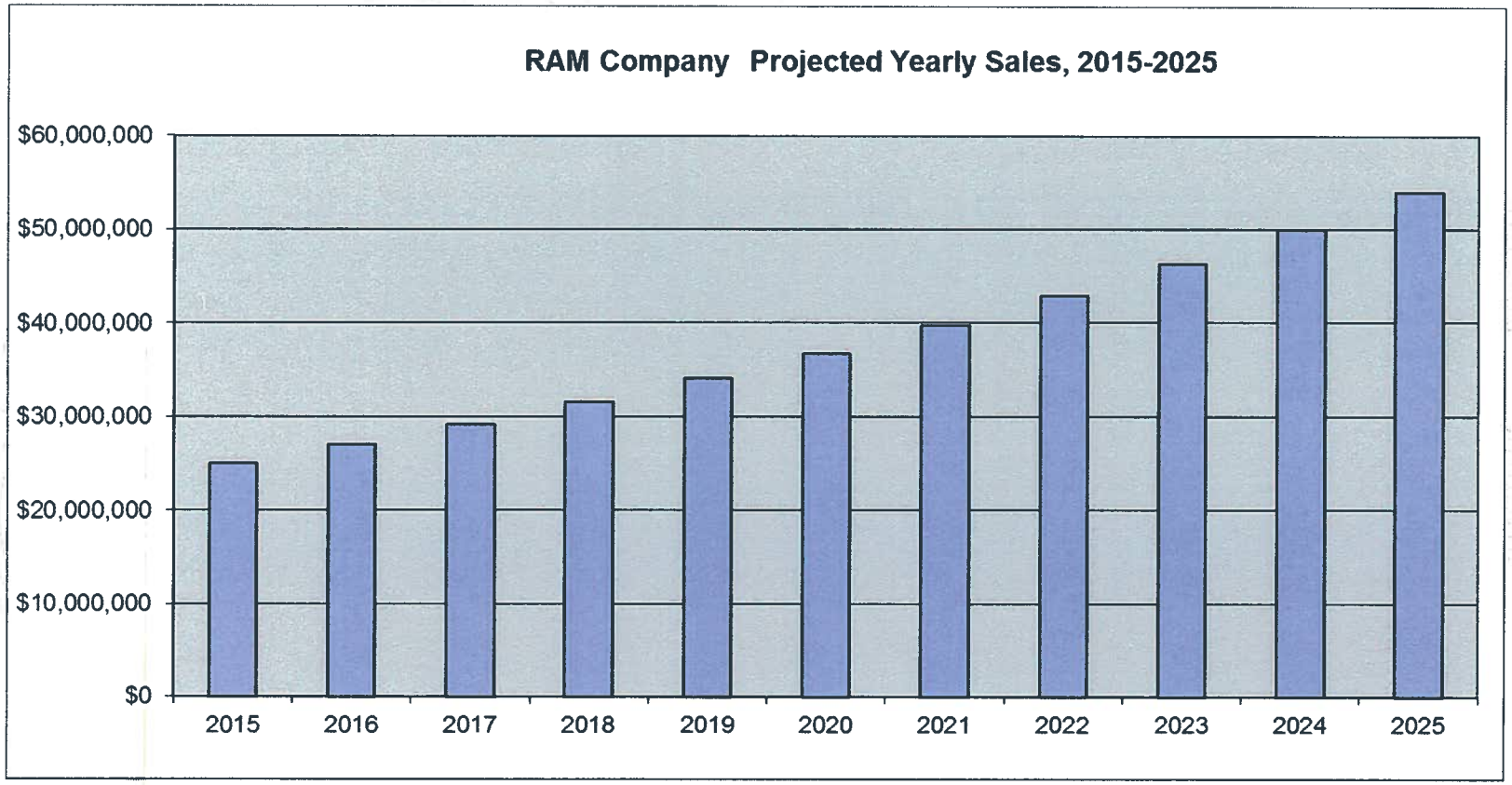

Projected Annual Sales, 2015-2025

- $50MM in sales by 2024.
- More than double 2015 sales by 2025.

Annual R&D Spending, 2010-2015

- As a tech company, RAM spends a large amount of capital on Research and Development.
  - Total $8,730,359 R&D spend 2010-2015 (2015 is estimated at $1,750,000, 2010-2014: Reported Federal Tax Credit).
  - $1,455,060 average R&D spend (2010-2015).
  - R&D spend growing at a 5% annual rate.

Local Spending-2010-2015

- **In addition to an annual payroll of $7.5MM+…**
  - RAM has spent $5.5MM to local, Washington County vendors (machined components, supplies, etc…).
  - RAM has contracted $2.5MM to local, Washington County companies for building improvements and purchases.
  - RAM has invested $4.5MM in capital equipment, primarily with Utah based machinery and equipment distributers.
  - RAM invested $842,000 in one of the largest privately owned solar-power generating systems in Utah. RAM donates thousands of dollars annually in free power back to the city.
  - RAM donates money, machinery, and personnel to DXATC, and has an active, working relationship with DSU.

Looking to the Future: 2016-2025

- RAM has the potential to grow fairly rapidly, but we do not have the facility space and equipment to achieve the following:
  - Potential for 8-15% annual revenue growth.
  - Potential for 4-8% annual job growth.
  - Potential for 8-12% annual spending growth.
  - Potential for 5-10% annual R&D growth.

Questions??

The Olde World Historical Council Presents:

ROUND-UP DAYS

GAMES

Sawdust Scramble

Crossfit Games

3 Legged Races

- WHEN: September 18 & 19, 2015
  10am – 7pm
- WHERE: Vernon Worthen Park

In conjunction with The Round Up Days Rodeo

CONTESTS

Pie Eating

Watermelon

EVENTS

Petting Zoo

Bounce Houses

Mechanical Bull Riding

Climbing Wall

ENTERTAINMENT

VENDORS

BROWNING

FOOD

MORE CRAFTS

FARMERS MARKET

Thanks to our Sponsors!