Lindon City Planning Commission Staff Report

August 25, 2026

Notice of Meeting
Lindon City Planning Commission

The Lindon City Planning Commission will hold a regularly scheduled meeting on **Tuesday, August 25, 2026,** in the Council Room of Lindon City Hall, 100 North State Street, Lindon, Utah. The meeting will begin at **6:00 p.m.** This meeting may be held electronically to allow a commissioner to participate by video or teleconference. Meetings are broadcast live at www.youtube.com/LindonCity. The agenda will consist of the following items:

Agenda
Invocation: By Invitation
Pledge of Allegiance: By Invitation

Scan or click here for link to download agenda & staff report materials.

1. **Call to Order**

2. **Approval of minutes -** Planning Commission 07/14/2026

3. **Public Comment**

4. **Conditional Use Permit – Lindon Collision, LLC**
   Eric Read requests Conditional Use Permit approval to operate an auto parts manufacturing business specializing in fabrication and production for classic vehicle parts at 503 N. Geneva Road.
   (10 minutes)

5. **Site Plan Approval – JZ Styles**
   John Clark with Building by John is requesting site plan approval to construct a 31,410-square-foot building to accommodate a variety of uses such as a salon, retail space, office, and warehouse, and fulfillment.
   (20 minutes)

6. **Plat Amendments– Lindon's Edge**
   Praus, LLC is requesting to amend the lot lines of the existing three-lot subdivision while maintaining three lots within the development. This request is also amending the previously approved condominium plat from 14 buildings with 3 condominium units in each building, down to a total of 5 buildings with 3 condominium units in each building. (20 minutes)

7. **Public Hearing - General Plan Amendment – 1200 E. Street Master Plan**
   Dave Gardner filed a land use application to amend the Lindon City General Plan Street Master Plan Map to reduce the width of the future 800 N/1200 E. connector road behind the four residential properties at 663 E. 770 N., 677 E. 770 N., 689 E. 770 N., 771 E. 770 N. (20 minutes)

8. **Public Hearing - Development Manual & Water Shares Ordinance – Lindon City**
   Lindon City is proposing amendments to Lindon City Code Title 17 and the Lindon City Land Development Policies, Standard Specifications and Drawings Manual to revise the types and amounts of water shares/irrigation water stock accepted by the City for development, permitting, and connecting to the City's water system. The proposed amendments would discontinue the acceptance of North Union Canal water shares and certain equivalent water shares and authorize the acceptance of Alpine Full water shares and equivalent water shares. The proposed amendments to Title 17 also provide clarifying language for accepting water shares or a fee in lieu of shares to the city. (20 minutes)

9. **Cottonwood Healthcare Corporate Headquarters – Ordinance Amendment – CANCELLED**
   Brian Swendsen with Cottonwood Healthcare is requesting to amend Lindon City Code §17.48.025, Figure 1, to remove the sales tax production requirement as found in §17.48.025(3) from District 8 of the Lindon Village zone.

10. Community Development Director Report - General City Updates

Adjourn

Staff Reports and application materials for the agenda items above are available for review at the Lindon City Community Development Department, located at 100 N. State Street, Lindon, UT. For specific questions on agenda items our Staff may be contacted directly at (801) 785-7687. City Codes and ordinances are available on the City web site found at www.lindon.gov. The City of Lindon, in compliance with the Americans with Disabilities Act, provides accommodations and auxiliary communicative aids and services for all those citizens in need of assistance. Persons requesting these accommodations for City-sponsored public meetings, services programs or events should call Britni Laidler at 785-1971, giving at least 24 hours' notice.

The above notice/agenda was posted in three public places within Lindon City limits and on the State http://www.utah.gov/pmn/index.html and City www.lindon.gov websites.

****The duration of each agenda item is approximate only***
Posted By: Britni Laidler, City Recorder
Date: 08/21/2026 **Time:** 5:00 pm
Place: Lindon City Center, Lindon Police Station, Lindon Community Center

Notice of Meeting
Lindon City Planning Commission

Item 1 – Call to Order

Sharon Call
Mike Marchbanks
Rob Kallas
Steve Johnson
Scott Thompson
Jared Schauers
Karen Danielson
Ryan Done

The Lindon City Planning Commission held a regularly scheduled meeting on **Tuesday, July 14, 2026 beginning at 6:00 p.m**. at the Lindon City Center, City Council Chambers, 100 North State Street, Lindon, Utah.

REGULAR SESSION – 6:00 P.M.

Conducting:	Rob Kallas, Chairperson
Invocation:	Mike Marchbanks, Commissioner
Pledge of Allegiance:	Scott Thompson, Commissioner

PRESENT	**EXCUSED**
Rob Kallas, Chairperson	Ryan Done, Commissioner
Sharon Call, Commissioner	Brian Haws, City Attorney
Jared Schauers, Commissioner	
Karen Danielson, Commissioner	
Scott Thompson, Commissioner	
Mike Marchbanks, Commissioner	
Steve Johnson, Commissioner	
Michael Florence, Community Dev. Director	
Brittany Wilde, City Planner	
Britni Laidler, Recorder	
Aubrie Ivie, Deputy Recorder	

1. **CALL TO ORDER** – The meeting was called to order at 6:00 p.m.

2. **APPROVAL OF MINUTES** –The minutes of the regular meeting of the Planning Commission meeting of June 23, 2026, were reviewed.

COMMISSIONER DANIELSON MOVED TO APPROVE THE MINUTES OF THE REGULAR MEETING OF JUNE 23, 2026 AS PRESENTED. COMMISSIONER MARCHBANKS SECONDED THE MOTION. ALL PRESENT VOTED IN FAVOR. THE MOTION CARRIED.

3. **PUBLIC COMMENT** – Chairperson Kallas called for comments from any audience member who wishes to address any issue not listed as an agenda item. There were no comments.

CURRENT BUSINESS

4. **Public Hearing - Amendment and Termination of the Development Agreement - Lindon City and MS Industrial Properties.** MS Industrial Properties, LLC is requesting approval of an ordinance amending and terminating the Development Agreement between Lindon City and MS Industrial Properties, LLC.

Community Development Director Michael Florence presented the item. He provided background on the 2008 Development Agreement between Lindon City and MS Industrial

Properties, LLC (Martin Snow), which was originally established in connection with a planned extension of 1200 West. At the time, the road was not yet continuous to the south, so rather than accept a dedication of the road, the city entered into an agreement requiring MS Industrial to construct the road segment, place funds in escrow, and dedicate the road to the city at a future date.

Director Florence explained that the City Council had since removed the southward extension of that road segment from the Street Master Plan, eliminating the basis for the original agreement. With the road no longer planned as a public through-street, the development agreement can now be terminated. He confirmed that the road as built serves as a functional driveway between the buildings on the 10.3-acre property, that fire access to all buildings is maintained, and that utility easements—including sewer, storm drain, and water—will be preserved as part of a related settlement agreement to be considered by the City Council. The settlement also addresses a dispute regarding the alignment of Anderson Lane relative to the adjacent property boundary.

COMMISSIONER JOHNSON MOVED TO OPEN THE PUBLIC HEARING. COMMISSIONER CALL SECONDED THE MOTION. ALL PRESENT VOTED IN FAVOR. THE MOTION CARRIED.

Chairperson Kallas called for Any public comment. Hearing none, he called for a motion to close the public hearing.

COMMISSIONER MARCHBANKS MOVED TO CLOSE THE PUBLIC HEARING. COMMISSIONER CALL SECONDED THE MOTION. ALL PRESENT VOTED IN FAVOR. THE MOTION CARRIED.

Commissioners asked clarifying questions about the looping of utilities. Director Florence confirmed that the storm sewer connects to Anderson Lane, that the water line serves the buildings without looping, and that public works had determined no looping was required.

Chairperson Kallas called for further comments or discussion from the Commissioners. Hearing none, he called for a motion.

COMMISSIONER DANIELSON MOVED TO RECOMMEND APPROVAL OF ORDINANCE NO. 2026-13-O AMENDING AND TERMINATING THE DEVELOPMENT AGREEMENT BETWEEN LINDON CITY AND MS INDUSTRIAL PROPERTIES, LLC, THAT WAS RECORDED WITH THE UTAH COUNTY RECORDER'S OFFICE ON JUNE 16, 2008. COMMISSIONER MARCHBANKS SECONDED THE MOTION. THE VOTE WAS RECORDED AS FOLLOWS:

CHAIRPERSON KALLAS	AYE
COMMISSIONER CALL	AYE
COMMISSIONER SCHAUERS	AYE
COMMISSIONER DANIELSON	AYE
COMMISSIONER MARCHBANKS	AYE
COMMISSIONER JOHNSON	AYE

COMMISSIONER THOMPSON AYE
THE MOTION CARRIED UNANIMOUSLY.

5. **Public Hearing - Zone Amendment North Pointe Solid Waste Special Service .** District North Pointe Solid Waste Special Service District is requesting to amend the Lindon City Zoning Map from Regional Commercial (RC), Light Industrial (LI), and Light Industrial West Overlay (LI-W) to General Commercial.

City Planner Brittany Wilde presented the application from North Pointe Solid Waste Special Service District, represented by Neil Schwendiman, requesting an amendment to the Lindon City Zoning Map. The affected parcels are located west of I-15 near 2000 West and are currently zoned Regional Commercial (RC), Light Industrial (LI), and Light Industrial West Overlay (LI-W). The applicant requests that all parcels be rezoned to Commercial General (CG).

Planner Wilde noted that one parcel—the Light Industrial West Overlay parcel—was inadvertently omitted from the public notice mailing, though it was included in both the application and the staff report.

Planner Wilde explained that the City's General Plan already identifies these properties as Commercial General. The primary rationale for staff's support of the rezone is the property's strategic location within an area anticipated to experience significant transportation improvements, including new I-15 frontage roads, a new partial Lindon interchange at 2000 West, and the planned Vineyard Connector, an east-west corridor linking Orem, Vineyard, Lindon, Pleasant Grove, American Fork, and Lehi. Staff concluded that Commercial General zoning better reflects the General Plan's vision for directing commercial development along major transportation corridors.

Representative, Neil Schwendiman addressed the Commission to explain the district's plans. He stated that North Pointe intends to sell the subject property, with proceeds funding a major capital improvement at their existing transfer station facility—specifically, the construction of a new 70,000 square-foot transfer station building. He described planned phased improvements including reconstruction of the eastern entrance, a new internal road to separate traffic from the construction zone, an automated commercial scale house system, and plans for an education area in the new building where tours will be allowed. The full project is estimated to take approximately two to three years to complete. Commissioner Marchbanks and others expressed appreciation for the overview of North Pointe’s operations.

COMMISSIONER CALL MOVED TO OPEN THE PUBLIC HEARING. COMMISSIONER DANIELSON SECONDED THE MOTION. ALL PRESENT VOTED IN FAVOR. THE MOTION CARRIED.

Chairperson Kallas called for any public comment. The following comments were made:

<u>Conner and Lauren Weldon</u> – from WICP, a major landowner with about 70 tenants in Lindon, addressed the Commission without opposing North Pointe's rezoning while raising concerns. They highlighted severe congestion issues, especially at a two-way stop near the interchange,

and questioned whether the promised traffic improvements, including the Vineyard Connector, would be timely. The Weldons mentioned an unfulfilled eight-year-old promise for a traffic signal at 600 North and 2800 West, expressing the need for future development traffic studies. They described issues where damage over $2,500 is labeled as civil rather than criminal, suggesting a revisit of these legal thresholds. Additionally, they raised concerns over an unfavorable land swap that affected adjacent properties managed by UDOT.

Commissioners acknowledged concerns. Director Florence explained city progress on traffic signals, citing delays due to American Fork needing to move power poles, with UDOT urging action to complete by spring. Future traffic studies would be required at development. The property damage issue is considered a state-level matter but would be communicated to the relevant department.

Chairperson Kallas called for any further public comment. Hearing none, he called for a motion to close the public hearing.

COMMISSIONER MARCHBANKS MOVED TO CLOSE THE PUBLIC HEARING. COMMISSIONER CALL SECONDED THE MOTION. ALL PRESENT VOTED IN FAVOR. THE MOTION CARRIED.

Commissioner Johnson asked why the subject parcels were being rezoned to Commercial General rather than Regional Commercial, as the surrounding area is primarily zoned RC. Director Florence explained that the city does not generate meaningful sales tax revenue from Regional Commercial, whereas Commercial General—which reflects a State Street-style retail designation—better positions the interchange area as a commercial gateway and aligns with the General Plan's goal of fostering retail development at major transportation nodes.

Chairperson Kallas called for further comments or discussion from the Commissioners. Hearing none, he called for a motion.

COMMISSIONER JOHNSON MOVED TO RECOMMEND APPROVAL OF ORDINANCE NO. 2026-14-O AMENDING THE LINDON CITY ZONING MAP FROM REGIONAL COMMERCIAL (RC), LIGHT INDUSTRIAL (LI), AND LIGHT INDUSTRIAL WEST OVERLAY TO COMMERCIAL GENERAL (CG), SUBJECT TO THE FOLLOWING CONDITION: 1. ALL ITEMS OF THE STAFF REPORT. COMMISSIONER SHARON SECONDED THE MOTION. THE VOTE WAS RECORDED AS FOLLOWS:

CHAIRPERSON KALLAS	AYE
COMMISSIONER CALL	AYE
COMMISSIONER MARCHBANKS	AYE
COMMISSIONER JOHNSON	AYE
COMMISSIONER THOMSON	AYE
COMMISSIONER DANIELSON	AYE

THE MOTION CARRIED UNANIMOUSLY.

6. Community Development Director Report-

- Alpine School District Bus Yard Proposal

- Upcoming Applications
- Water Share Ordinance Update
- General City Updates

ADJOURN-

COMMISSIONER CALL MOVED TO ADJOURN THE MEETING AT 7:15 PM. COMMISSIONER DANIELSON SECONDED THE MOTION. ALL PRESENT VOTED IN FAVOR. THE MOTION CARRIED.

Approved, August 25, 2026

_____
Rob Kallas, Chairperson

_____
Michael Florence, Community Development Director

Item 4: Lindon Collision, LLC – Conditional Use Permit

Date: August 25, 2026
Applicant: Eric Read
Presenting Staff: Brittany Wilde

General Plan: Mixed Commercial
Current Zone: Mixed Commercial

Property Owner: MS Business Properties Group 1, LLC
Address: 503 N Geneva Rd
Parcel ID: 14:064:0068
Lot Size: 1.0586 acre

Type of Decision: Administrative
Council Action Required: No

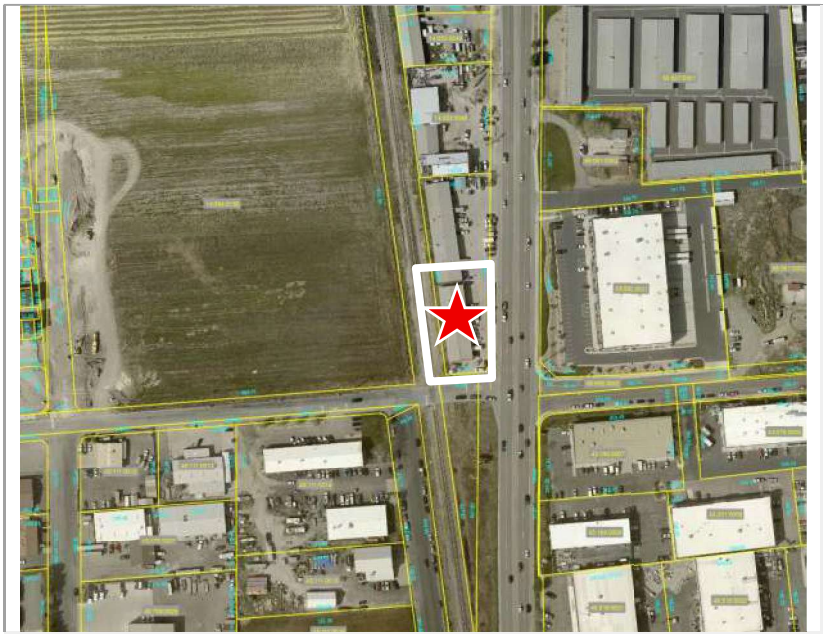

SUMMARY OF KEY ISSUES
The applicant is requesting a conditional use permit to operate an auto parts manufacturing business specializing in fabrication and production for classic vehicle parts at 503 N. Geneva Road.

OVERVIEW
1. The applicant requests conditional use permit approval to operate an auto parts manufacturing business specializing in fabrication and production for classic vehicle parts at 503 N. Geneva Rd.
2. All work on the vehicles will be done entirely indoors with the outdoor space used only for employee and customer parking or temporary storage of the vehicles that are waiting to be serviced.

MOTION
I move to (*approve, deny, continue*) the applicant's request for a conditional use permit to use the property located at 503 N Geneva Rd for an auto servicing business, with the following conditions:

1. Vehicles may not be stored outdoors for longer than 72 hours unless the owner is waiting on delivery of parts;
2. No vehicle parts will be stored outside of the building;
3. No autobody work such as replacing metal panels, priming, painting;
4. Only the fabrication and production of auto parts is approved for this business;
5. The applicant will comply with all the Mixed Commercial Special Provisions requirements found in section 17.50.120 of the Lindon City Code; and
6. All items of the staff report.

SURROUNDING ZONING AND LAND USE
North: Mixed Commercial – Warehouse/Office space
East: Mixed Commercial – Warehouse/Office space
South: Light Industrial – Warehouse/Office space
West: Anderson Farms Planned Development – Vacant lot

STAFF ANALYSIS

City Staff find that this business will have a minimal impact on surrounding properties and will be compatible with other uses in the Mixed Commercial zone.

EXHIBITS

1. Aerial Image
2. Letter of Intent

Exhibit 1: Aerial Image

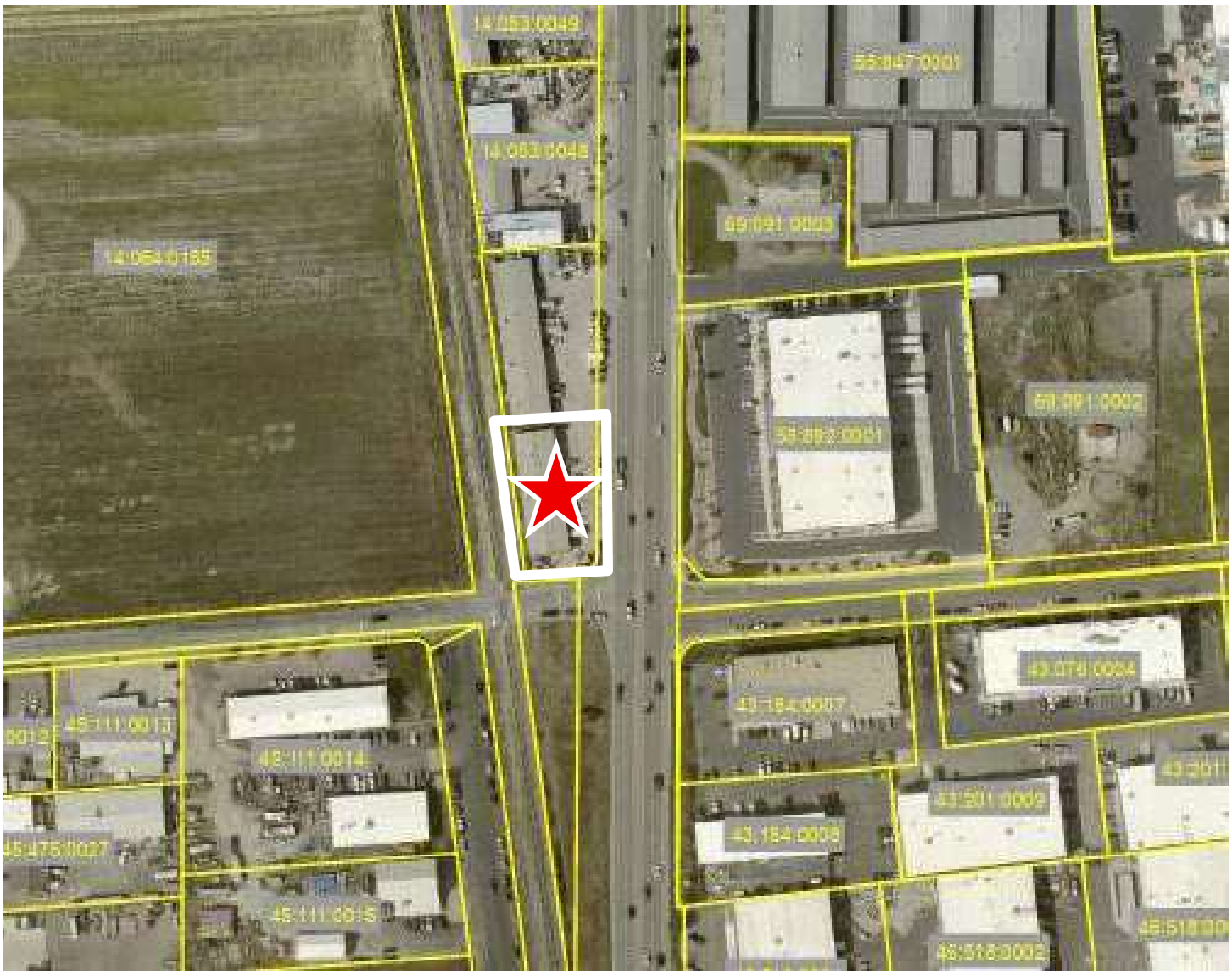

LETTER OF INTENT

To: Lindon City Council

Re: Fabrication and Indoor Storage Use

Dear Members of the Lindon City Council:

We are submitting this Letter of Intent to clarify the nature and intended use of our business operations in Lindon City.

Our business activities will be limited to **fabrication work and indoor storage** associated with our operations. Fabrication will be performed **inside the building**, and materials, equipment, projects, and other business-related items will be stored **indoors**.

Our intent is to operate a clean, organized, and professional facility while being respectful of the surrounding businesses, properties, and community. We understand the importance of maintaining an appropriate appearance and minimizing any potential impact on neighboring properties.

Specifically, our operations will consist of:

- Custom fabrication and related shop work conducted inside the facility.
- Indoor storage of materials, equipment, parts, and projects associated with the fabrication business.
- No outdoor storage of vehicles, materials, parts, equipment, or unfinished projects as part of our normal business operations.
- No outdoor fabrication or repair work.
- Maintaining the property in a clean, orderly, and professional condition.
- Operating in accordance with applicable Lindon City requirements and conditions of approval.

Our goal is to maintain a straightforward fabrication operation that is compatible with the surrounding area. The facility is intended to provide the enclosed workspace and storage necessary for our business while keeping business activities contained within the building.

We appreciate the opportunity to operate our business in Lindon and respectfully request the City Council's consideration and approval of our proposed use.

Thank you for your time and consideration. We are happy to provide any additional information or clarification the Council may require.

Sincerely,

Eric Read
Lindon Collision Center, LLC

Item 5: Site Plan Approval – JZ Styles – 550 Hawks Rise Lane

Date: August 25, 2026

Applicant: John Clark
Presenting Staff: Brittany Wilde

Project Address: 550 Hawks Rise Lane
Property Owner: House of JZ LLC

General Plan: General Commercial
Current Zone: Commercial General (CG) in the Planned Residential Development Overlay (PRD)

Parcel ID: 45:819:0002
Lot Size: 2.0922 acres

Type of Decision: Administrative
Council Action Required: No

Summary of Key Issues

1. The applicant is requesting site plan approval to construct a 31,410-square-foot building to accommodate a variety of uses, primarily consisting of a salon, retail space, office, film/photography studio, warehouse, and fulfillment areas.

Site Plan Motion

I move to (*approve, deny, continue*) the applicant's request for site plan approval with the following conditions:

1. The applicant will continue to work with the City Engineer to make all final corrections to the engineering documents;
2. The plans will meet development specifications as found in the Lindon City Development Manual and city code;
3. The landscape plan and percentages will meet city code requirements;
4. Final exterior material design will meet the Commercial Design Standards for commercial sites and buildings;
5. The roof design is approved as designed;
6. The applicant will complete the Floodplain Development Permit;
7. An updated photometric study will be provided and approved by city staff;
8. No deep-rooted trees or structures shall be placed in the storm drain easement;
9. The applicant will comply with all bonding requirements, if applicable; and
10. All items of the staff report.

Surrounding Zoning and Land Use

North: Commercial General (CG) / Planned Residential District (PRD) Overlay– Bank of America/Multifamily Residential
East: Planned Residential District (PRD) Overlay – Multifamily Residential
South: Commercial General (CG) / Planned Residential District (PRD) Overlay– Commercial property/Single-Family Residential
West: Commercial General A (CG-A) – Retail

Site Development Standards

Parking

Parking standards are based on the zone and the different uses in the building and their respective square footage.

Requirement	Provided	Compliant?
Salon/Retail: 1/200 square feet	31 stalls	Yes
Office: 1/350 square feet	37 stalls	Yes
Warehouse: 1/500 square feet	24 stalls	Yes
Total parking: 92 stalls	103 total stalls provided (98 standard stalls and 5 ADA stalls)	Yes
Drive aisle 24' width; Fire access route installed with crash gate	Ranges from 24'-26' drive aisles; Fire access route is 26' in width and meets fire code requirements	Yes
Bicycle parking. 8 required	8	Yes

Traffic Circulation

Access to the subject property will be from Songbird Lane. UDOT required the developer to the north-west of the subject property (Bank of America) to install a deceleration lane on State Street. The subject property will benefit from the installation of the deceleration lane. The drive approach into the salon is 208' from the right-of-way line on State Street.

Landscaping Standards

Landscaping standards are based on the zone and the number of parking stalls.

Interior Parking Lot Landscaping Standards	Compliant?
A parking lot with 10 or more required parking spaces shall provide at least 40 sq ft of interior landscaped area for each parking space. 103 x 40= 4120 sq ft required.	Staff needs to confirm with the applicant, although it seems that there is enough interior landscaping to meet the parking lot landscaping standards.
The landscape materials shall consist of at least 75% living vegetation, and 25% of xeriscape materials.	Staff needs to confirm with the applicant on the required amount of landscape materials as this calculation was not included in the plans.
The interior layout must meet one or a combination of the multiple interior landscape layout standards found in the parking code	Yes, the project provides both landscape islands and perimeter parking lot landscaping.
Trees must be installed within the interior parking lot landscaping areas at a ratio of 1 tree for every 10 required parking stalls.	Yes, the project exceeds this requirement and provides additional trees.
Any off-street parking lot adjacent to a residential use or residential zone shall provide a minimum ten-foot (10') landscape buffer from the parking lot to the adjacent residential use or zone.	No. However, the applicant would like to request the Planning Commission reduce the landscaping requirement from 10' to 5' on the northeast and south property line along fence.

Required Site Landscaping	Provided	Compliant?
20-foot landscaping strip along public street frontages	Ranges from 20' – 40'	Yes
Trees shall be planted at least every 30' along State Street	Tree plantings meet the spacing requirements	Yes
Landscaping must be 70% vegetation and 30% other ground covers.	Vegetative cover = 70% Other ground covers = 21%	No. The plans do not state the other ground cover percentage. Staff needs to confirm with applicant.

Other Site Requirements

Site requirements are based on the development standards for the indicated zone.

Requirements	Provided	Compliant?
Minimum Lot Size of Zone is 20,000 sq ft	2.0922 acres (91,136 sf)	Yes
Building Setback • Front: 20' • Rear: 40' • Side: 0' • Side: 0'	The building meets both the front and rear setbacks; see additional setback requirement for height transition below	Yes
Building Height Max: 48'	36'	Yes
Two additional feet of building setback for every one foot in height over 30' • 52' rear yard setback when abutting a residential use or zone	Residential to the east • Distance from back of building to street (includes sidewalk measurement) = 20' • Total distance from the building setback to front residential property line = 53' Residential to the South • Total Distance from the building setback to the side residential property line: 55'	Yes

<u>Building Design and Architectural Standards</u>

Architectural Design

Design Element	Design Standard Requirement	Applicants Proposal
Massing and Form	A significant amount of the primary ground story façade facing public streets should be transparent glazing. The ground floor of the primary façade shall be 60% fenestration at the pedestrian level.	The design meets the 60% fenestration at the pedestrian level.
Façade Articulation	Building articulation is important to visually engage the populace. This can be accomplished through façade modulation, use of engaged columns or other expressions of the structural system, horizontal and vertical divisions through differing textures and materials.	The façade does include horizontal and vertical divisions through differing textures and materials such as stone, metal, and large storefront windows. The building features large columns at the southwest entrance, along the northwest side, and by the balcony on the northeast side of the building.
Façade Articulation	Avoid flat looking walls/façades and large, boxy buildings. Break up the flat front effect by introducing projecting elements such as wings, porticos, bay windows, trellises, pergolas, port-cocheres, awnings, recessed balconies and/or alcoves, cornices, or other offsets, changes in plane, and changes in height. On smaller buildings, the break in façade should be every 15' to 25'.	The façade does include an alcove and canopy over the entrance for the salon and a canopy for the retail storefront. A balcony is proposed on the northeast and northwest sides. The building also features changes in height and decorative parapet. There is a change in materials or decorative features every 15'-20'.
Color	Avoid large areas of the same color and/or materials with no relief. Conversely, avoid the use of too many materials and/or colors, which may create busy or incongruous facades.	The applicant is proposing four different color variations. The four colors meet the Lindon Color Palette.

	Earth tones are generally preferred over harsh or loud colors, except where more vibrant colors are used as accents to the primary colors.	
Roofing	Sloped roofs should be the primary roof form and should use a material that is compatible in material and color with the exterior material of the building. Flat roofs can be used but should always be used with a parapet and/or decorative cornice.	The roof to the main entrance of the salon has a sloped roof but a majority of the building has a flat roof with a decorative parapet.
Exterior Walls and Surfacing (Building Materials)	Brick, stone, or colored decorative block should be utilized as the primary building material (60% or greater of the building), especially on street-facing facades. Stucco, wood, architectural metals, colored decorative concrete and cement board siding may be used as secondary (less than 40%) building materials, and on less visible facades.	The proposed design has a stone façade and stucco material with windows that are oriented towards the street. The stone and windows meet the 60% material requirement. The design has both window fenestration, changes in materials, alcoves, and canopies with architectural detailing such as metal, windows, and stone.
Buffer Zone and Fence	Buffer between commercial and residential properties	A minimum seven-foot concrete masonry wall will be constructed as noted on the plans. The applicant is requesting a reduction in the required landscaping buffer along the commercial side of the 7-foot concrete masonry fence near the northeast and south property lines, reducing the required buffer from 10 feet to a 5-foot landscape strip. A crash gate for the Fire Department will also be installed on the property. Applicant is to work with staff and the Fire Department to meet code requirements for the crash gate.
Fenestration (Windows and Doors)	Storefront windows should be framed with a material complementary to the primary building material(s). Wood or metal are framing materials that work well with brick or stone. If storefront windows do not reach the ground, a projecting sill should be used at the bottom.	The plans show storefront windows that are oriented towards State Street and along Songbird Lane. A projecting sill is located on the southwest side of the building for the windows near the retail entrance. All windows and doors are framed in metal.
Site Lighting (Building Lighting)	Lighting styles within individual developments should complement the architecture and landscape design as well as the overall Commercial District streetscape lighting scheme. Avoid selecting different types of lighting for individual developments.	The photometric plan provides lighting information for the site but does not include the proposed building-mounted lighting. The building rendering shows exterior lighting along the State Street façade; however, additional building-mounted lighting may be needed to adequately illuminate and enhance the building façade while also providing a safe and well-lit environment for pedestrians.

Exterior Trim and Detailing	Molding or trim around the windows can be used to enhance a simple window shape. Brick should appear self-supporting and three-dimensional. Use the range of decorative patterns brick offers. Use combinations of soldiers, headers, stringers, etc. to form patterns that create cornices, wall caps, water tables, and other details. Use patterns in a manner consistent with the material. Materials for trim and details shall be compatible with the primary exterior material. Detailing should be authentic with the characteristics and capabilities of the materials.	A decorative parapet encompasses the building. Earth tone colors are used around the windows to enhance the window shape.

Engineering Requirements

The City Engineer is working through technical issues related to the civil engineering plans and will ensure all engineering related issues are resolved before final approval is granted.

Storm Drain Easement

There is a storm drain easement to the south-west of the property line that needs to be maintained. The building is setback from the easement approximately 41'. No deep-rooted trees or structures shall be placed in the easement. Staff reviewed the plans and have determined that no structure will be constructed within the easement.

Floodplain Approval

The property is in a flood zone. According to floodplain regulations, buildings must have a 1-foot above base flood elevation. According to Lindon City Code §17.62.140 and §17.62.170, the floodplain administrator reviews and makes the final decision on floodplain development permits and procedures.

Staff Analysis

Staff believes the building meets the architectural requirements of the General Commercial zone with the exception of two items:

1. Exterior building lighting. See below the Lindon City Commercial Design Standard requirements.
2. The applicant is requesting a reduction in the required landscaping buffer along the 7-foot concrete masonry fence near the south property lines, reducing the required buffer from 10 feet to a 5-foot landscape strip. Staff finds that reducing the landscaping requirement will not adversely affect the overall percentage of landscaping on the site and still creates a buffer between residential and the commercial use with the 7' masonry fence.

Lindon City Commercial Design Standards – **Site Lighting**

"Lighting styles within individual developments should complement the architecture and landscape design as well as the overall Commercial District streetscape lighting scheme. Avoid selecting different types of lighting for individual developments."

- 3.4.1 – Building Lighting
  - Lighting may be used to highlight and articulate building facades.
  - Building facades should be lit primarily at street level.
  - Above the first floor, light should only be used to selectively highlight unique building features without lighting the entire structure.
- 3.4.2 – Landscape Lighting
  - Reserve special architectural lighting for individual plaza areas to emphasize focal points

Exhibits

1. Aerial photo
2. Site Plan
3. Landscaping Plan
4. Building Elevations/Renderings
5. Floodplain Map

Exhibit 1: Aerial photo

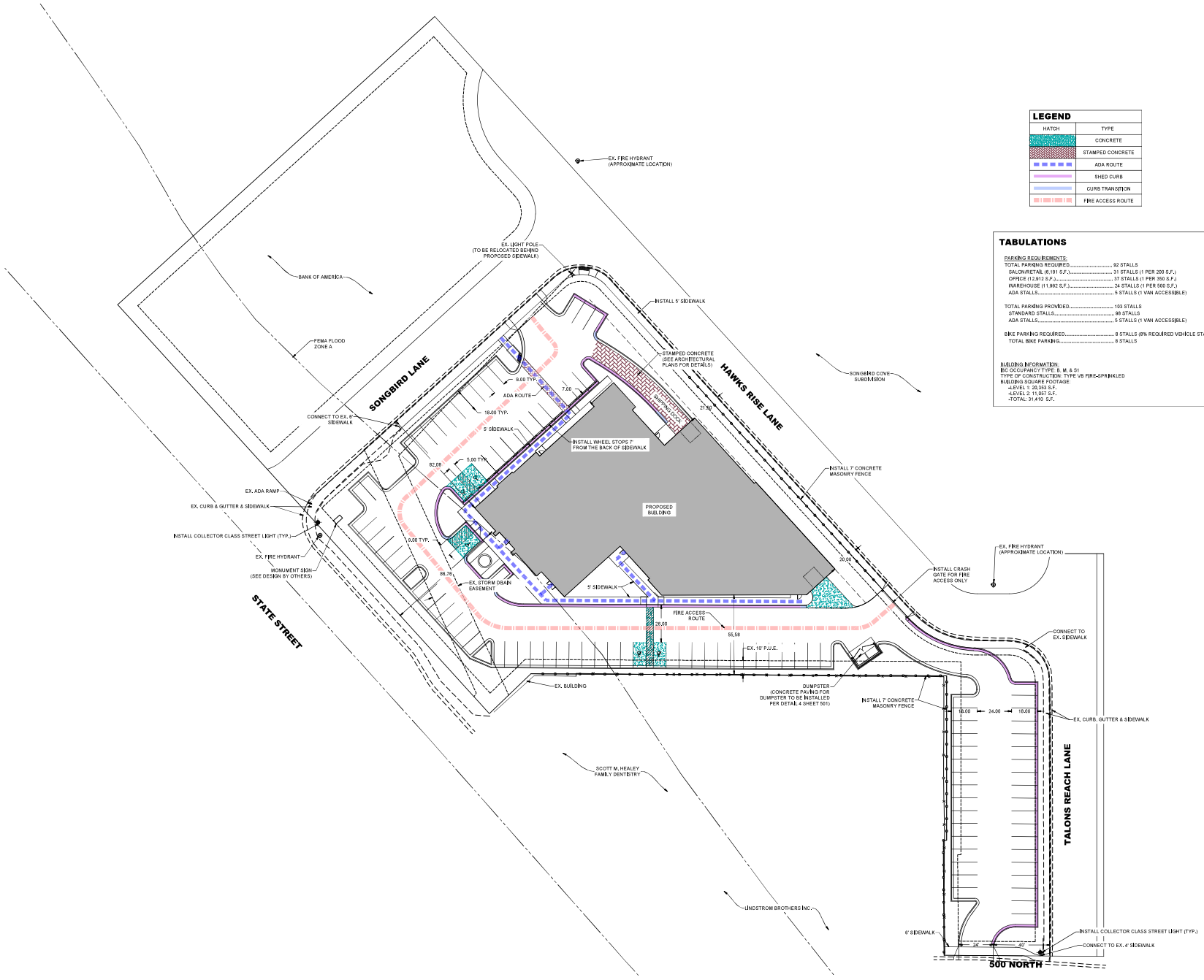

LEGEND

HATCH	TYPE
	CONCRETE
	STAMPED CONCRETE
	ADA ROUTE
	SHED CURB
	CURB TRANSITION
	FIRE ACCESS ROUTE

TABULATIONS

PARKING REQUIREMENTS:
TOTAL PARKING REQUIRED..... 92 STALLS
SALON/RETAIL (6,191 S.F.)..... 31 STALLS (1 PER 200 S.F.)
OFFICE (12,912 S.F.)..... 37 STALLS (1 PER 350 S.F.)
WAREHOUSE (11,992 S.F.)..... 24 STALLS (1 PER 500 S.F.)
ADA STALLS..... 5 STALLS (1 VAN ACCESSIBLE)

TOTAL PARKING PROVIDED..... 103 STALLS
STANDARD STALLS..... 98 STALLS
ADA STALLS..... 5 STALLS (1 VAN ACCESSIBLE)

BIKE PARKING REQUIRED..... 8 STALLS (8% REQUIRED VEHICLE STALLS)
TOTAL BIKE PARKING..... 8 STALLS

BUILDING INFORMATION:
IBC OCCUPANCY TYPE: B, M, & S1
TYPE OF CONSTRUCTION: TYPE VB FIRE-SPRINKLED
BUILDING SQUARE FOOTAGE:
-LEVEL 1: 20,353 S.F.
-LEVEL 2: 11,057 S.F.
-TOTAL: 31,410 S.F.

SCALE 1"=30'
30 15 0 30
NORTH

LEI
CIVIL
STRUCTURAL
SURVEY
801-798-0555
www.lei-eng.com

STATE OF UTAH
NATHAN K. WALTER
No. 7973888-2202
REGISTERED PROFESSIONAL ENGINEER

JZ STYLES
LINDON, UTAH

SITE PLAN

REVISIONS
1 -
2 -
3 -
4 -
5 -

LEI PROJECT #: 2026-0026
DRAWN BY: CJI/BAP
DESIGNED BY: NKW
SCALE: 1"=30'
DATE: 8/18/2026

SHEET 104

U:\0_LEI PROJECTS\2026\2026-0026 CLARK, JOHN SITE PLAN-LINDON\CAD\CIVIL\SITE PLAN\26-0026 JZ STYLES SITE PLAN.DWG 8/18/2026 3:53 PM

PLANT MATERIALS

(NOTE: PLANT QUANTITIES ARE PROVIDED FOR CONVENIENCE ONLY. IN CASE OF DISCREPANCY, THE DRAWING SHALL TAKE PRECEDENCE)

SYMBOL	CODE	QTY	BOTANICAL / COMMON NAME	CONT	CAL	SIZE	DETAIL
CONIFERS							
	Tyt	48	Taxpenis tinginiana 'Taylor' Taylor Baffaro Juniper T+2, low water, 30 x 5', sun, Z4, Utah Lake water tolerant	B & B		6'	
	Pan	17	Pinus aristata 'Vanderbrian' Vanderbrian Ridge Pine Low water, 10' x 6', sun to part shade, Z3-8, Utah Lake water tolerant	B & B		8'-10'	
DECIDUOUS TREES							
	Sr b	37	Syringa reticulata 'Bailtree' Snowdance Tree Lilac T+0, 18x20, AV 2-4, sun, Z3	B & B	2" Cal		
SYMBOL	CODE	QTY	BOTANICAL / COMMON NAME	CONT			DETAIL
DECIDUOUS SHRUBS							
	Hlp1	20	Hydrangea paniculata 'Limelight' Limelight Hydrangea moderate, 6-8 x 6-8, full to part sun, z3, Utah Lake water tolerant	5 gal			
	Hlsf	39	Hydrangea quercifolia 'Ruby' Snowflake Oakleaf Hydrangea moderate, 8x8, part shade, z5	5 gal			
EVERGREEN SHRUBS							
	Bl	80	Buxus microphylla 'Little Missy' Little Missy Littleleaf Boxwood 2' x 2' 'O'	5 gal			
	Bgr	207	Buxus x 'Green Velvet' Green Velvet Boxwood 7x6', part sun to shade, moderate water, z4, Utah Lake water tolerant	5 gal			
PERENNIALS							
	G wn	65	Gaura lindheimeri 'Whirling Butterflies' Whirling Butterflies Wandflower P1, 36x24, AV 4-8, sun z6, Utah Lake water tolerant	1 gal			
	Ds	40	Deutzia x 'Nantes Snowcraft' Nantes Snowcraft Candytuft 6" TALL 3' WIDE	5 gal			
ROSES							
	R wn	301	Rosa x 'Meicoublan' White Meidiland Rose 5x5, 2-3 x 3, AV 28, sun, z5, Utah Lake water tolerant	5 gal			

SITE MATERIALS

(NOTE: SITE MATERIALS QUANTITIES ARE PROVIDED FOR CONVENIENCE ONLY. IN CASE OF DISCREPANCY, THE DRAWING SHALL TAKE PRECEDENCE)

SYMBOL	CODE	DESCRIPTION	QTY	DETAIL
1 LANDSCAPE				
	LP-01	SOD/EC LAWN AREA LAWN AREAS SHALL BE SOD. NEW TURF AREAS TO BE SODDED WITH DROUGHT TOLERANT KENTUCKY BLUE GRASS OR APPROVED EQUAL. SEE SOD LANDSCAPE NOTES FOR FURTHER INFORMATION. SHEET LP-101.	3,828 sf	
	LP-02	1" MEDIUM WHITE CRUSHED ROCK SUBMIT SAMPLES FOR LANDSCAPE ARCHITECT AND OWNER APPROVAL. PROVIDE 3" DEPTH OF ROCK MULCH TOP LAYERING. SEE INORGANIC MULCH LANDSCAPE NOTES FOR ADDITIONAL INFORMATION. SHEET LP-101.	15,223 sf	
2 HARDSCAPE				
	LP-03	6" CONCRETE MOW CURB SEE DETAIL SHEET FOR ADDITIONAL INFORMATION. SHEET LP-501.	262 lf	
9 SITE FURNISHINGS				
	LP-04	EUROPEAN STYLE OUTDOOR PLANTER: APPROX. 2' W X 2' W X 4' H OR A 2' X 2' X 3' H PEDESTAL	3	

ISSUE DATE	PROJECT NUMBER
8/6/2026	UT26101

NO.	REVISION	DATE
1	CITY COMMENTS	08-08-2026
2		
3		
4		

PLAN INFORMATION

** THIS PRINT FROM PKJ DESIGN GROUP IS BASED ON CIVIL AND ARCHITECT INFORMATION ISSUED ON 07/08/26

811 BLUE STAKES OF UTAH
UTILITY NOTIFICATION CENTER, INC.
1-800-662-4111
www.bluestakes.org

NORTH

0' 15' 30' 60' 120'
GRAPHIC SCALE: 1" = 30'

PROJECT INFORMATION

JZ STYLES LINDON
550 N HAWKS RISE LN
LINDON, UTAH

DEVELOPER / PROPERTY OWNER / CLIENT

TIM DRAPER
(801)404-6747
TIM@JZSTYLES.COM

COPYRIGHT:
PKJ DESIGN GROUP

THIS DOCUMENT AND THE IDEAS AND DESIGNS INCORPORATED HEREIN AS AN INSTRUMENT OF PROFESSIONAL SERVICE IS PROPERTY OF PKJ DESIGN GROUP. IT IS NOT TO BE USED IN WHOLE OR IN PART FOR ANY OTHER PROJECT WITHOUT THE WRITTEN AUTHORIZATION OF PKJ DESIGN GROUP.

LANDSCAPE ARCHITECT / PLANNER

PKJ DESIGN GROUP
Landscape Architecture / Planning & Visualization
3450 N. TRIUMPH BLVD, SUITE 102
LEHI, UTAH 84043 (801) 995-2217
www.pkjdesigngroup.com

LICENSE STAMP

DAVID A. KAUFFMAN
STATE OF UTAH
8/6/2026

DRAWING INFO

DR:	JTA
DRAWN:	ACP
CHECKED:	KBA
PLOT DATE	8/6/2026

COLOR ILLUSTRATION

CITY PERMIT SET
LP-COLOR

HARRIS ARCHITECTURE
jz styles
SALON
RETAIL

JZ STYLES - LINDON, UTAH

HARRIS ARCHITECTURE

THESE DRAWINGS, OR ANY PARTS THEREOF, AS INSTRUMENTS OF SERVICE, REMAIN THE PROPERTY OF THE ARCHITECTS AND MAY NOT BE REPRODUCED OR USED ON OTHER WORK WITHOUT THEIR WRITTEN CONSENT.

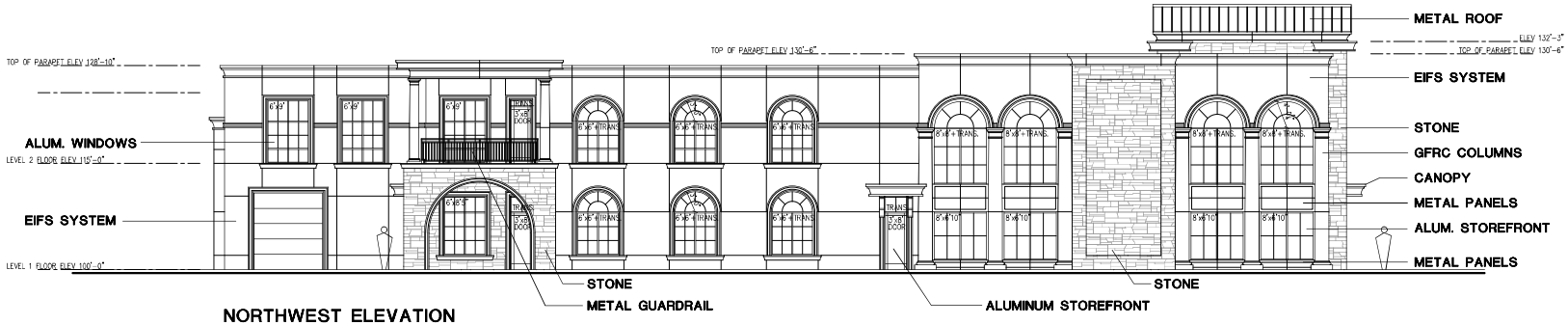

NORTHWEST ELEVATION

1/8" = 1'-0"

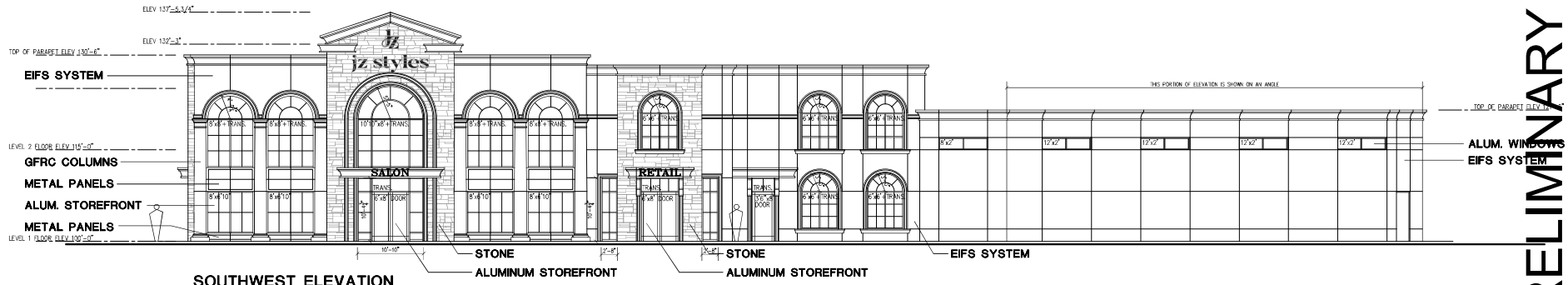

SOUTHWEST ELEVATION

1/8" = 1'-0"

PRELIMINARY - NOT FOR CONSTRUCTION

REVISIONS

DRAWN BY

HARRIS ARCHITECTURE

3520 N UNIVERSITY AVENUE #200, PROVO, UT 84604 | 801-377-9393 | WWW.HARRIS-ARCHITECTURE.COM

A NEW OFFICE BUILDING IN LINDON, UTAH

jz styles

EXTERIOR ELEVATIONS

AUGUST 14, 2026

A2.1

THESE DRAWINGS OR ANY PARTS THEREOF, AS INSTRUMENTS OF SERVICE, REMAIN THE PROPERTY OF THE ARCHITECTS AND MAY NOT BE REPRODUCED OR USED ON OTHER WORK WITHOUT THEIR WRITTEN CONSENT

PLOT DATE: 8/14/2026 X:\ACAD\FILES\JZ STYLES BUILDING\DRAWINGS\PRELIMS\jzstylebldg_A2-01-ELEV.dwg

NORTHEAST ELEVATION

1/8" = 1'-0"

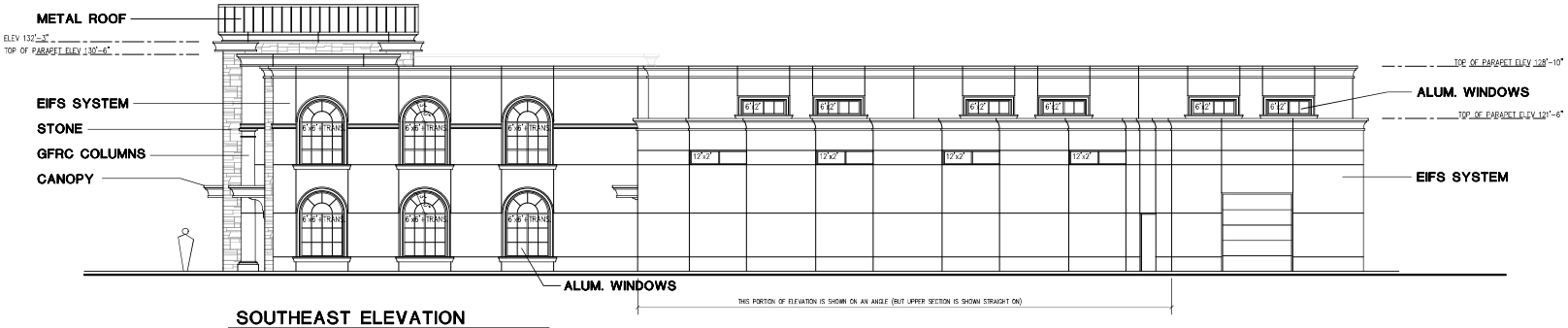

SOUTHEAST ELEVATION

1/8" = 1'-0"

PRELIMINARY - NOT FOR CONSTRUCTION

REVISIONS

DRAWN BY

HARRIS ARCHITECTURE

3520 N UNIVERSITY AVENUE #200, PROVO UT 84604 | 801-377-9393 | WWW.HARRIS-ARCHITECTURE.COM

A NEW OFFICE BUILDING IN LINDON, UTAH

jz styles

EXTERIOR ELEVATIONS

AUGUST 14, 2026

A2.2

THESE DRAWINGS OR ANY PARTS THEREOF, AS INSTRUMENTS OF SERVICE, REMAIN THE PROPERTY OF THE ARCHITECTS AND MAY NOT BE REPRODUCED OR USED ON OTHER WORK WITHOUT THEIR WRITTEN CONSENT

PLOT DATE: 8/14/2026 X:\ACADFILE\JZ STYLES BUILDING\DWG\PRELIM\STANDARD_A-ARCH-ELEV.dwg

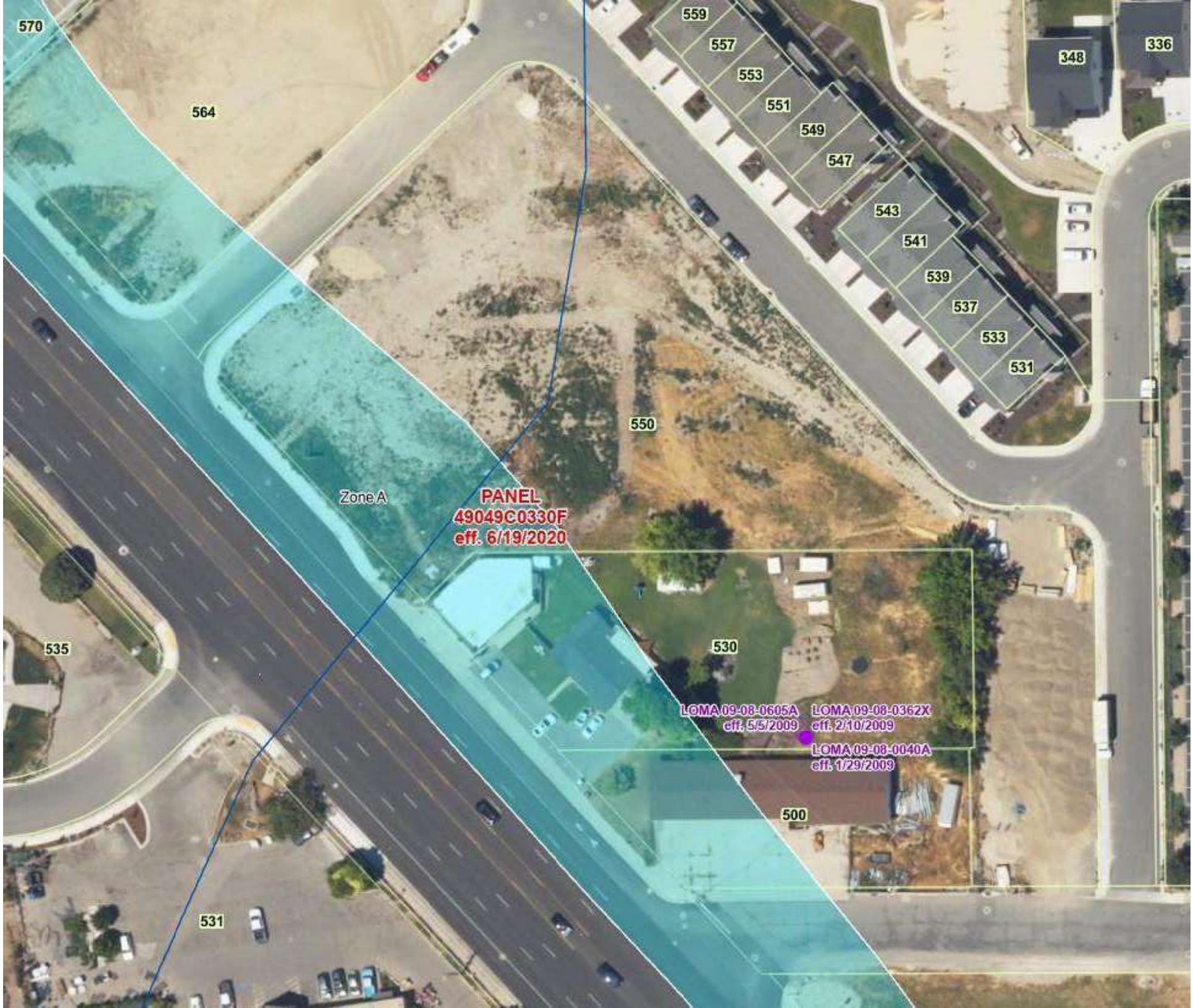
570
564
559
557
553
551
549
547
543
541
539
537
533
531
348
336
550
Zone A
PANEL
49049C0330F
eff. 6/19/2020
535
530
LOMA 09-08-0605A
eff. 5/5/2009
LOMA 09-08-0362X
eff. 2/10/2009
LOMA 09-08-0040A
eff. 1/29/2009
500
531

Item 6: Lindon's Edge – Major Subdivision Condominium Amendment and Plat Amendment

Date: August 25, 2026

Applicant: Praus LLC
Presenting Staff: Michael Florence

General Plan: General Commerial
Current Zone: Commercial General

Property Owners: Lindon's Edge LLC, and Castle Park Properties LLC

Council Action Required: No

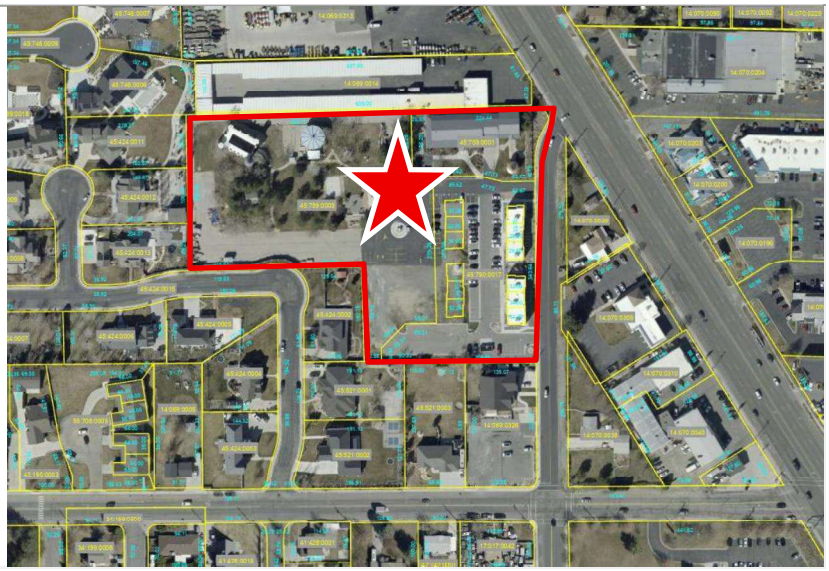

SUMMARY OF KEY ISSUES

The original development received site plan approval from the planning commission in 2019. Approval to divide the property into three lots was granted in 2020. Condominium approval for the first four buildings was approved in 2021. At this point, only the front two buildings have been constructed. Over the past few years, there has been a lawsuit regarding the development. Everything from the lawsuit has now been settled, and new developers are requesting to move forward on the project. One major modification to the project is that only 5 of the 14 office buildings will now be constructed.

The applicant is petitioning the planning commission for two plat amendments

1. To amend the existing condominium plat. The developer will reduce the number of buildings from 14 to 5 that will be constructed. The first condo plat was approved with four condominium buildings. The developer is requesting to amend the condo plat to include one additional building. Each building will still contain three office condominium units.
2. To amend the existing property lot lines. The property will remain divided into three lots, but the lot configuration is proposed to be modified.

MOTION

I move to recommend (approval, denial, or continuance) of the applicant's request for preliminary approval of the Lindon's Edge Office Condominium Plat "A" – 1st Amendment and Lindon's Edge Plat "A" – 1st Amendment with the following conditions:

1. The applicant will continue to work with city staff to make all final corrections to the plat for recording;
2. Prior to plat recording, the applicant will provide staff with a final plat mylar to include notarized signatures of owner's consent to dedication as identified on the attached subdivision plat;
3. Prior to recording, the applicant will provide staff with a final set of CC&R's and bylaws to include notarized signatures;
4. The plat will meet the applicable requirements as found in the Lindon City Development Manual;
5. Final Covenants, Conditions and Restrictions will be recorded with the subdivision plat;
6. All items of the staff report.

SURROUNDING ZONING AND LAND USES

Direction	Zoning	Existing Land Use
North	General Commercial (GC)	Office/Warehouse
South	Residential and Residential Business Overlay (R1-20 & RBO)	Single Family and Commercial
East	General Commercial (GC)	Single Family and Commercial
West	Residential (R1-20)	Single-family

Lot Requirements – General Commercial

Required	Compliant
Minimum property lot size: 20,000 sq/ft	Yes; the three property lots are as follows: • Lot 1 = 66,160 sf. • Lot 2 = 94,032 • Lot 3 = 96,416 sf.
Parking	With the original site plan approval, the development was approved with 315 parking stalls to be shared between the reception center and office park. Now that the number of units has been reduced, that affects the parking count. The site plan shows 245 total stalls over the 3 lots. In 2011, when the reception center received site plan approval, the reception center was required to have 228 parking stalls. Currently, there should be sufficient parking for the development. There has been some discussion about selling Lot 3 and changing the zoning to residential for two residential lot. The city would need to evaluate the parking requirements to ensure sufficient parking existing for the office and reception center uses.

Subdivision Requirements

Required	Compliant
For condominiums, three-dimensional drawings of unit areas and property surface description	Yes
Conditions, Covenants and Restrictions and bylaws for the condominium subdivision	Yes

Engineering Requirements

City staff are working through technical issues related to the plat and will ensure all engineering-related issues are resolved before final approval is granted.

EXHIBITS

1. Aerial Map
2. Site Plan
3. Three Lot Plat Amendment
4. Condominium Plat Amendment
5. Original Property Plat Amendment
6. Original Condominium Plat

Exhibit 1 – Aerial Map

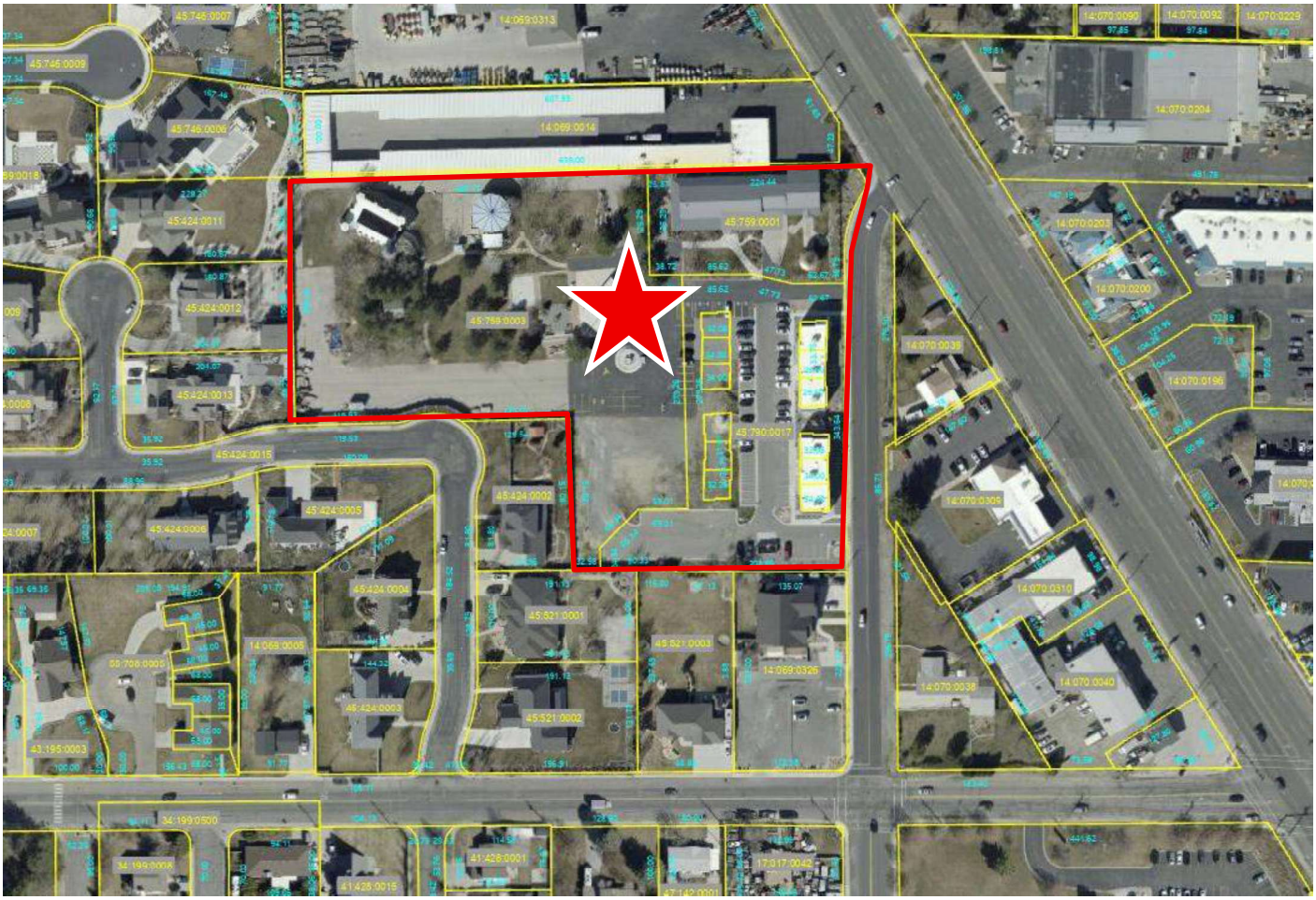

Exhibit 2 - Site Plan

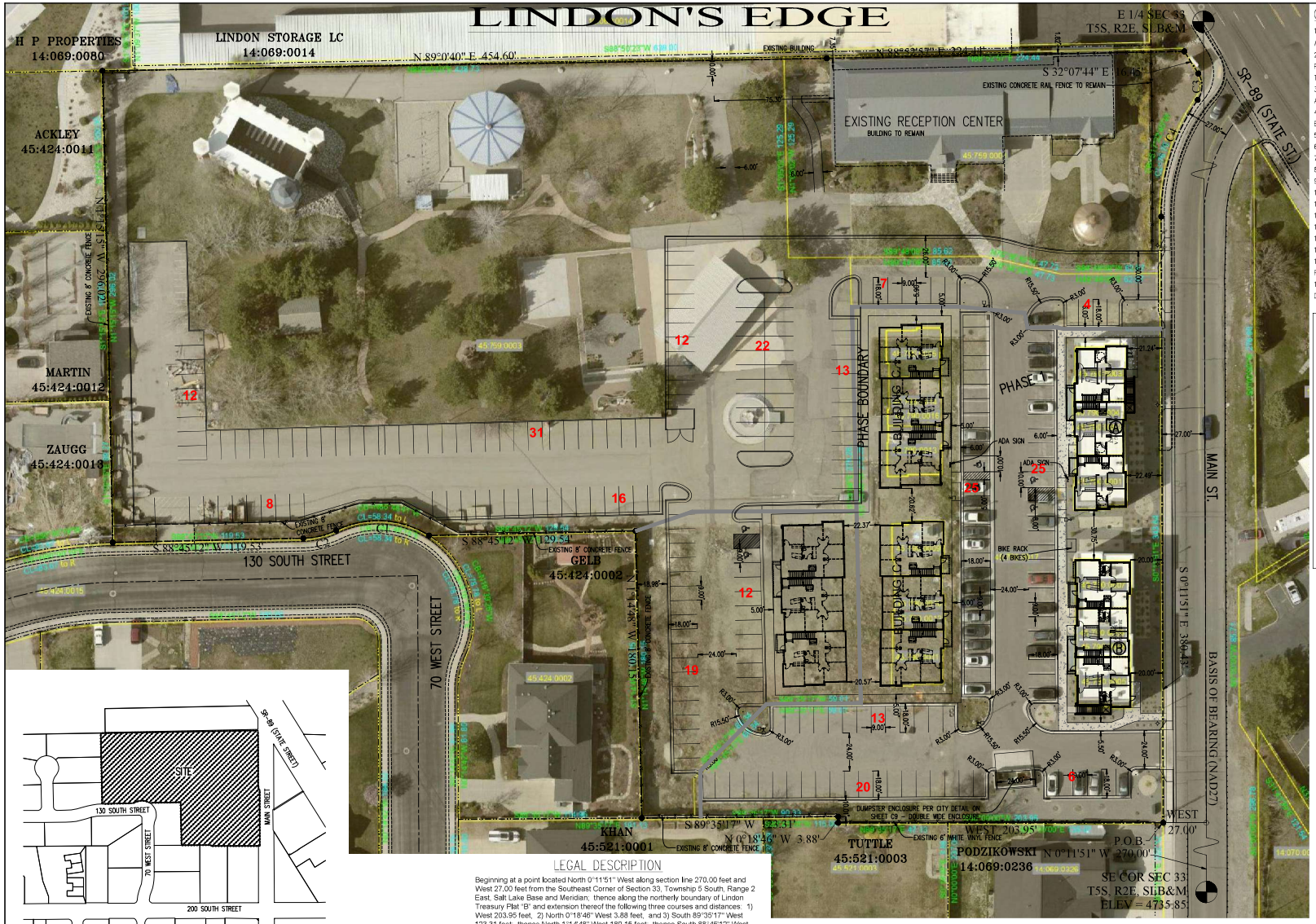

VICINITY MAP

CURVE TABLE

CURVE	RADIUS	LENGTH	DELTA	CHORD	BEARING
C1	60.00	60.92	58°10'38"	58.34	N 86°46'41" W
C2	50.00	21.48	24°37'12"	21.32	S 76°26'36" W
C3	15.00	17.57	67°6'1"	16.58	S 1°24'49" W
C4	127.00	77.92	35°9'12"	76.70	S 17°22'45" W

LEGAL DESCRIPTION

Beginning at a point located North 0°11'51" West along section line 270.00 feet and West 27.00 feet from the Southeast Corner of Section 33, Township 5 South, Range 2 East, Salt Lake Base and Meridian; thence along the northerly boundary of Lindon Treasury Plat "B" and extension thereof the following three courses and distances: 1) West 203.95 feet, 2) North 0°18'46" West 3.88 feet, and 3) South 89°35'17" West 123.31 feet; thence North 1°11'48" West 180.15 feet; thence South 88°45'12" West 129.54 feet; thence along the arc of a 60.00 foot radius curve to the left 60.92 feet through a central angle of 58°10'38" (chord bears North 86°46'41" West 58.34 feet); thence along the arc of a 50.00 foot radius curve to the right 21.48 feet through a central angle of 24°37'12" (chord bears South 76°26'36" West 21.32 feet); thence South 88°45'12" West 119.53 feet; thence North 1°15'15" West 296.02 feet; thence North 89°00'40" East 454.60 feet; thence North 88°52'57" East along a fence line and extension thereof a distance of 224.44 feet; thence South 32°07'44" East 16.45 feet; thence along the arc of a 15.00 foot radius curve to the right through a central angle of 67°06'01" for 17.57 feet (chord bears South 01°24'49" West 16.58 feet); thence along the arc of a 127.00 foot radius curve to the left through a central angle of 35°09'12" for 77.92 feet (chord bears South 17°22'45" West 76.70 feet); thence South 0°11'51" East 380.43 feet to the point of beginning.

Area = 5.8907 Acres

GENERAL NOTES:

1. THE APPLICANT IS RESPONSIBLE FOR COMPLIANCE WITH ALL REQUIREMENTS OF THE AMERICANS WITH DISABILITIES ACT" (ADA).
2. ALL LANDSCAPED AREAS SHALL HAVE AN AUTOMATIC, UNDERGROUND SPRINKLING SYSTEM WITH A BACKFLOW PREVENTION DEVICE AND A BACKFLOW PREVENTION DEVICE TO THE BUILDING, UNLESS LANDSCAPING IS SERVED BY THE SECONDARY WATER SYSTEM.
3. WATER METERS ARE TO BE LOCATED BEHIND BACK OF WALK OR BACK OF CURB IN AN AREA THAT IS ACCESSIBLE, NOT LOCATED BEHIND FENCED AREAS OR UNDER COVERED PARKING.
4. LINDON STANDARD SPECIFICATIONS AND DRAWINGS APPLY TO CONSTRUCTION OF PUBLIC IMPROVEMENTS THAT WILL BE OWNED OR MAINTAINED BY LINDON CITY AND TAKE PRECEDENCE OVER OTHER STANDARDS.
5. NO PRESSURE REDUCING VALVES ARE PROPOSED ON THIS SITE.
6. ZONE=CG
7. IBC CONSTRUCTION TYPE: 5-B, OCCUPANCY CLASSIFICATION: B
8. INTERNATIONAL FIRE CODE CONSTRUCTION TYPE: 5-B, OCCUPANCY CLASSIFICATION: B
9. THE EXISTING RECEPTION CENTER IS TO REMAIN. ALL OTHER BUILDINGS ARE TO BE REMOVED.
10. ALL PUBLIC UTILITIES ARE ALREADY CONSTRUCTED IN THE STREET IN FRONT OF THE SITE.
11. SEE SEPARATE SUBMITTALS ON STORM DRAINAGE CALCULATIONS AND GEOTECHNICAL REPORT
12. ALL BUILDINGS WILL BE FIRE SPRINKLED.
13. SEE UTILITY PLAN FOR SITE LIGHTING LOCATIONS. SEE DETAIL ON DETAIL SHEET C9.
14. ALL PROPOSED UTILITIES ON-SITE ARE PRIVATE UNLESS OTHERWISE NOTED.
15. NO FLOOR DRAINS ARE PROPOSED FOR THIS SITE.
16. THIS LOT IS LOCATED IN ZONE C, FEMA FIRM COMMUNITY PANEL NUMBER 490210 0005 C, EFFECTIVE DATE FEBRUARY 19, 1986.
17. THE DEVELOPER IS RESPONSIBLE FOR PROVIDING USABLE POWER TO ENERGIZE ALL STREET LIGHTS FOR THE DEVELOPMENT.

PARKING TABULATIONS:

OFFICE AREA: 47,919 S.F. @ 1/350 S.F. = 137 STALLS

STORAGE AREA: 6,000 S.F. @ 1/500 S.F. = 12 STALLS

TOTAL PARKING STALLS REQUIRED: 149

TOTAL PARKING STALLS PROVIDED INCLUDING ADA: 248

ADA STALLS REQUIRED AND PROVIDED: 6

BICYCLE PARKING: 5% X 313 STALLS = 25, HOWEVER ONLY A MAXIMUM OF 16

BICYCLE PARKING ARE REQUIRED. 16 BIKE PARKING ARE PROVIDED.

RECEPTION CENTER REQUIRED PARKING: 350 MAX ALLOWABLE OCCUPANTS WITH PARKING REQUIRED 1 SPACE PER 3.5 PERSONS. REQUIRED PARKING: 100

THE RECEPTION CENTER USE WILL OCCUR IN THE EVENINGS SO THE 100 PARKING STALLS WILL BE SHARED WITH OFFICE PARKING REQUIREMENT.

SHEET INDEX

C1 SITE PLAN
C2 DEMOLITION PLAN
C3 UTILITY PLAN
C4 GRADING PLAN (NORTH)
C5 GRADING PLAN (SOUTH)
C6 EROSION CONTROL PLAN
C7 BMP DETAILS
C8 BMP DETAILS
C9 DETAIL SHEET
C10 DETAIL SHEET
C11 MAIN STREET TBC PLAN/PROFILE
C12 LONG TERM STORM WATER POLLUTION PREVENTION AND MAINTENANCE PLAN

30 15 0 30 60 90

Scale 1" = 30'

REVISIONS

Rev.	Date	Description
1	01/10/19	REVISED AS PER CITY COMMENTS FROM REVIEW 1
2	02/04/19	MODIFIED BUILDING FRONTING MAIN STREET
3	03/05/19	RELOCATED AND COMBINED DUMPSTER ENCLOSURES & FIXED CITY REDLINES

Surveyor: Aztec Engineering, Inc.
c/o Aaron Thomas
801-592-2693

BENCH MARK

SOUTHEAST CORNER, SECTION 33, TOWNSHIP 5 SOUTH, RANGE 2 EAST, SALT LAKE BASE AND MERIDIAN
ELEVATION = 4735.85

Castle Park Properties, LLC
110 South Main, Lindon, UT 84042

EXCEL ENGINEERING
David W. Peterson, P.E., License #270393
12 West 100 North, Suite 201, American Fork, UT 84003
P: (801) 756-4504; david@excelcivil.com

LINDON'S EDGE
LINDON 126 S. MAIN UTAH

Drawn by: D.W.P.
Designed by: D.W.P.
Checked by: D.W.P.

SITE PLAN

Scale: 1"=30'
Date: 11/05/18

C1

Exhibit 3 - Proposed 3 Lot Plat Amendment

LINDON'S EDGE PLAT "A" - 1st AMENDMENT

LOCATED IN THE SOUTHEAST 1/4 OF SECTION 33, TOWNSHIP 5 SOUTH, RANGE 2 EAST, SALT LAKE BASE & MERIDIAN.
CITY OF LINDON, COUNTY OF UTAH,
STATE OF UTAH

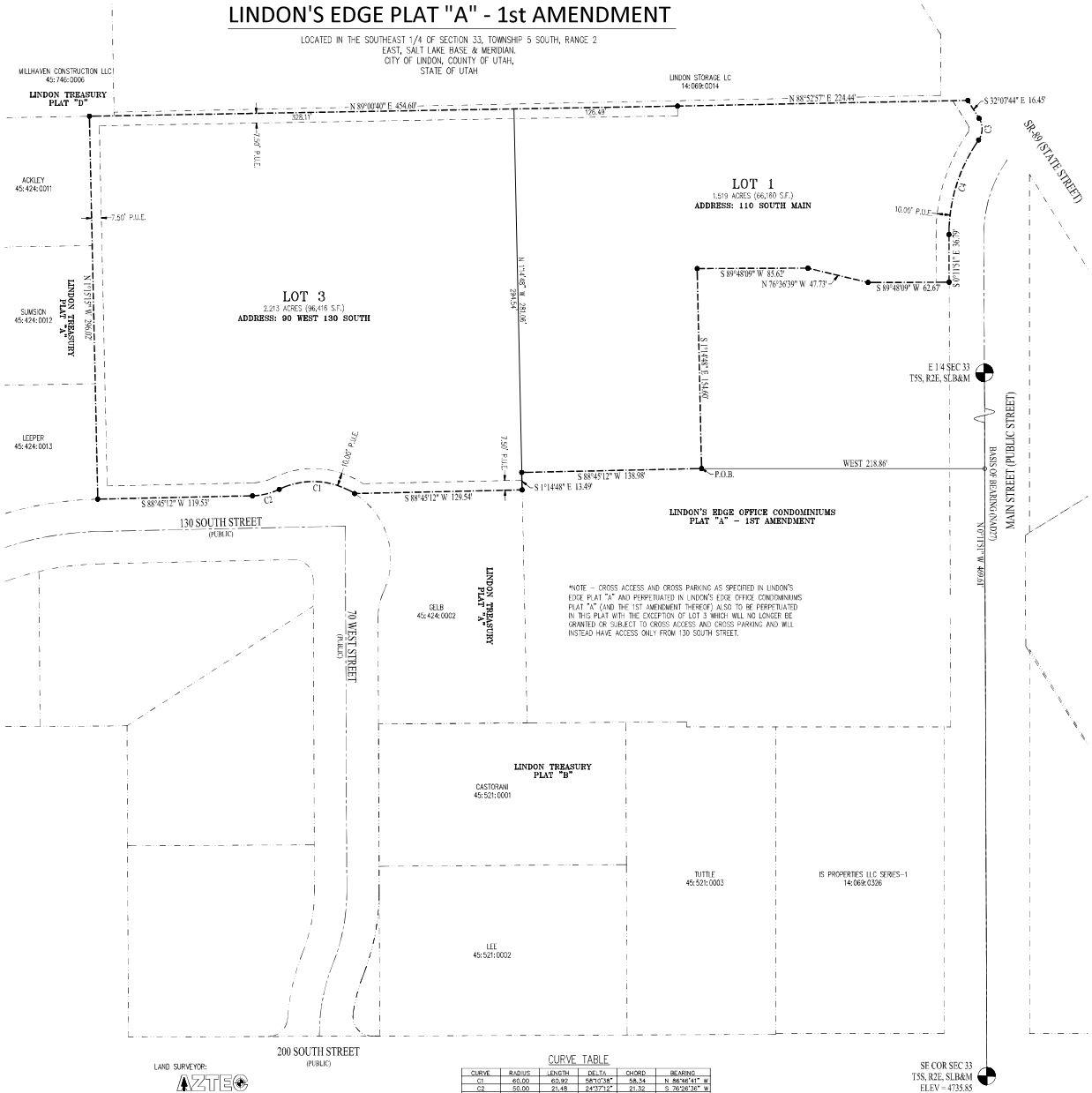

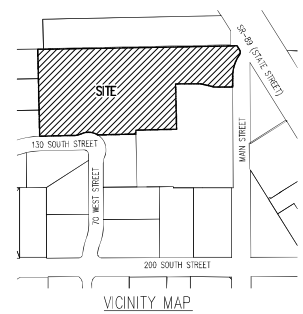

VICINITY MAP

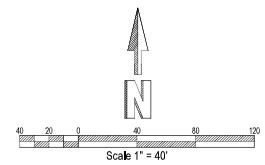

PLAT NOTES:
Lot 1 of Lindon's Edge Plat "A" – 1st Amendment subdivision is hereby declared to have, together with its owners, tenants, occupants, employees, agents, customers, invitees, licensees, successors, and assigns, nonexclusive reciprocal easements over, across, and through the private drive aisles, internal accessways, curb cuts, pedestrian routes, parking areas, and other common circulation areas located on Lindon's Edge Office Condominiums Plat "A" 1st Amendment, for the purposes of vehicular access, pedestrian access, ingress, egress, and parking. All parking stalls, maneuvering areas, drive aisles, and internal circulation routes located within the easement areas may be used in common by the owners and lawful users of the benefited lots, subject to reasonable rules that do not materially impair access, parking availability, emergency access, or compliance with applicable law and land use approvals. The reciprocal easement herein is also intended to benefit Lindon's Edge Office Condominiums Plat "A," 1st Amendment as a grantee of the easements herein described.
Lot 1 of Lindon's Edge Plat "A" – 1st Amendment and Lindon's Edge Office Condominiums Plat "A" – 1st Amendment shall be responsible for and shall pay its proportional share of all costs and expenses for the maintenance, repair, replacement, striping, lighting, snow removal, cleaning, drainage upkeep, and general operation of the shared areas, whether such costs are incurred periodically or as needed. The owners of the affected lots shall maintain their shared areas in good, safe, clean, and functional condition and in compliance with all applicable laws, ordinances, and approved site development requirements. No lot owner may obstruct, damage, or interfere with the intended common use of the shared areas. Notwithstanding the foregoing, nothing shall prohibit the owners of the Lots from negotiating the relocation or revision of cross easements described herein.

SURVEYOR'S CERTIFICATE

I, AARON D. THOMAS, DO HEREBY CERTIFY THAT I AM A PROFESSIONAL LAND SURVEYOR, AND THAT I HOLD CERTIFICATE NO. 6418780 AS PRESCRIBED UNDER THE LAWS OF THE STATE OF UTAH. I FURTHER CERTIFY BY AUTHORITY OF THE OWNER, I HAVE MADE A SURVEY OF THE TRACT OF LAND SHOWN ON THIS PLAT AND DESCRIBED BELOW, AND HAVE SUBDIVIDED SAID TRACT OF LAND IN TO LOTS, STREETS, AND EASEMENTS AND THE SAME HAS BEEN CORRECTLY SURVEYED AND STAKED ON THE GROUND AS SHOWN ON THIS PLAT AND THAT THIS PLAT IS TRUE, CORRECT AND ACCURATE.

AARON D. THOMAS (See Seal Below) — DATE

BOUNDARY DESCRIPTION

Beginning at a point located North 0°11'51" West along section line 469.61 feet and West 218.86 feet from the Southeast Corner of Section 33, Township 5 South, Range 2 East, Salt Lake Base and Meridian; thence South 88°45'12" West 136.98 feet; thence South 1°14'48" East 13.49 feet; thence South 88°45'12" West 129.54 feet; thence along the arc of a 60.00 foot radius non-tangent curve to the left 60.92 feet through a central angle of 58°10'38" (chord bears North 86°46'41" West 58.34 feet); thence along the arc of a 50.00 foot radius curve to the right 21.48 feet through a central angle of 24°37'12" (chord bears South 76°26'36" West 21.32 feet); thence South 88°45'12" West 119.53 feet; thence North 1°15'15" West 296.02 feet; thence North 89°00'40" East 454.60 feet; thence North 88°52'57" East along a fence line and extension thereof a distance of 224.44 feet; thence South 32°07'44" East 16.45 feet; thence along the arc of a 15.00 foot radius curve to the right 17.57 feet through a central angle of 67°06'01" (chord bears South 01°24'49" West 16.58 feet); thence along the arc of a 127.00 foot radius curve to the left 77.92 feet through a central angle of 35°09'12" (chord bears South 17°22'45" West 76.70 feet); thence South 0°11'51" East 36.79 feet; thence South 89°48'09" West 62.67 feet; thence North 76°36'39" West 47.73 feet; thence South 89°48'09" West 85.62 feet; thence South 1°14'48" East 154.60 feet to the point of beginning.

Area = 3.732 Acres

OWNER'S DEDICATION

KNOW ALL MEN BY THESE PRESENTS THAT THE UNDERSIGNED OWNER OF ALL OF THE PROPERTY DESCRIBED IN THE SURVEYOR'S CERTIFICATE HEREON AND SHOWN ON THIS PLAT, HAVE CAUSED A SURVEY AND THIS PLAT TO BE MADE OF THE PROPERTY AND HAVE CAUSED THE SAME TO BE SUBDIVIDED INTO LOTS, BLOCKS, STREETS AND EASEMENTS, AND DO HEREBY DEDICATE THE STREETS AND OTHER PUBLIC AREAS AS INDICATED HEREON FOR PERPETUAL USE OF THE PUBLIC. THE UNDERSIGNED OWNERS CONSENTS TO RECORDATION OF THIS PLAT .

IN WITNESS HEREOF WE HAVE HEREUNTO SET OUR HANDS THIS _____DAY OF _____, A.D. 20___

BY: _____
BY: _____
BY: _____
BY: _____

ACKNOWLEDGMENT

STATE OF UTAH }
COUNTY OF UTAH } S.S.

ON THE _____ DAY OF _____, A.D. 20_____, PERSONALLY APPEARED BEFORE ME THE SIGNERS OF THE FOREGOING CERTIFICATE AND DEDICATION WHO DULY ACKNOWLEDGED TO ME THAT THEY DID EXECUTE THE SAME IN THE CAPACITY INDICATED.

Commission Number _____ Signed (A Notary Public Commissioned in Utah)

Commission Expires _____ Print Name of Notary

ACCEPTANCE BY LEGISLATIVE BODY

THE CITY OF LINDON, COUNTY OF UTAH, APPROVES THIS SUBDIVISION SUBJECT TO THE CONDITIONS AND RESTRICTIONS STATED HEREON, AND HEREBY ACCEPTS THE DEDICATION OF ALL STREETS, EASEMENTS, AND OTHER PARCELS OF LAND INTENDED FOR PUBLIC PURPOSES FOR THE PERPETUAL USE OF THE PUBLIC THIS _____DAY OF_____, A.D. 20___

MAYOR — CITY ATTORNEY
PLANNING COMMISSION CHAIR — COMMUNITY DEVELOPMENT DIRECTOR
CITY ENGINEER (See Seal Below) — CITY RECORDER (See Seal Below)

OCCUPANCY RESTRICTION NOTICE

IT IS UNLAWFUL TO OCCUPY ANY BUILDING LOCATED WITHIN THIS SUBDIVISION WITHOUT FIRST HAVING OBTAINED A CERTIFICATE OF OCCUPANCY ISSUED BY THE CITY OF LINDON.

CONDITIONS OF APPROVAL

_____
_____
_____

PLAT "A" - 1st AMENDMENT

LINDON'S EDGE

INCLUDING A VACATION OF LOTS 1 & 3 OF LINDON'S EDGE PLAT "A"

LINDON CITY — UTAH COUNTY, UTAH
SCALE 1" = 40' FEET

SURVEYOR SEAL	NOTARY PUBLIC SEAL	CITY ENGINEER SEAL	CITY RECORDER SEAL	COUNTY RECORDER

LAND SURVEYOR:
AZTEC ENGINEERING
732 N. 780 W. AMERICAN FORK, UT 84003
aztecengineering@gmail.com

CURVE TABLE

CURVE	RADIUS	LENGTH	DELTA	CHORD	BEARING
C1	60.00	60.92	58°10'38"	58.34	N 86°46'41" W
C2	50.00	21.48	24°37'12"	21.32	S 76°26'36" W
C3	15.00	17.57	67°06'01"	16.58	S 17°24'49" W
C4	127.00	77.92	35°09'12"	76.70	S 17°22'45" W

Exhibit 4 - Proposed Condominium Plat Amendment

LINDON'S EDGE OFFICE CONDOMINIUMS PLAT "A" - 1ST AMENDMENT

LOCATED IN THE SOUTHEAST 1/4 OF SECTION 33, TOWNSHIP 5 SOUTH, RANGE 2 EAST, SALT LAKE BASE & MERIDIAN, CITY OF LINDON, COUNTY OF UTAH, STATE OF UTAH

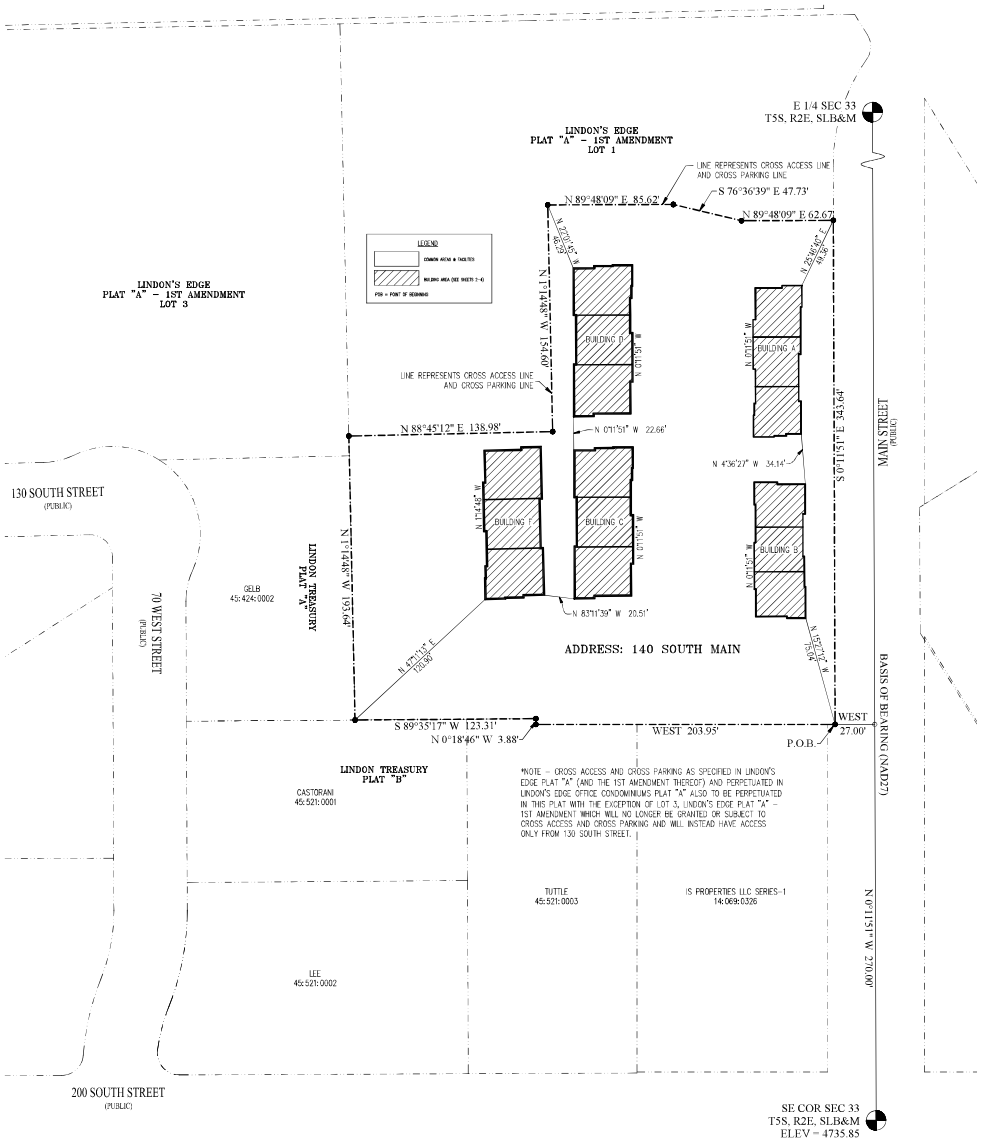

VICINITY MAP

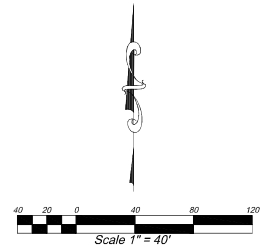

PUBLIC UTILITY EASEMENT NOTE

ALL COMMON AREA SHOWN ON THIS PLAT IS DESIGNATED AS A PUBLIC UTILITY EASEMENT.

RESERVATION OF COMMON AREAS

THE OWNERS IN RECORDING THIS CONDOMINIUM PLAT OF LINDON'S EDGE OFFICE CONDOMINIUMS PLAT "A" - 1ST AMENDMENT, A UTAH CONDOMINIUM PROJECT, HAVE DESIGNATED CERTAIN AREAS OF LAND AS PRIVATE, COMMON AREAS AND COMMON AREAS FOR PUBLIC UTILITY EASEMENTS, INTENDED FOR THE USE BY THE CONDOMINIUM OWNERS IN LINDON'S EDGE OFFICE CONDOMINIUMS PLAT "A" - 1ST AMENDMENT FOR INGRESS, BUSINESS AND OTHER RELATED ACTIVITIES. THE DESIGNATED AREAS ARE NOT DEDICATED HEREBY FOR USE BY THE GENERAL PUBLIC BUT ARE RESERVED FOR THE COMMON USE AND ENJOYMENT OF THE CONDOMINIUM OWNERS IN THE LINDON'S EDGE OFFICE CONDOMINIUMS PLAT "A" - 1ST AMENDMENT. SAID DECLARATION OF COVENANTS, CONDITIONS AND RESTRICTION IS HEREBY INCORPORATED AND MADE A PART OF THIS CONDOMINIUM PLAT AND BECOMES EFFECTIVE UPON THE DATE THAT THIS CONDOMIMIUM PLAT IS RECORDED IN THE OFFICIAL RECORDS OF UTAH COUNTY, UTAH.

NOTICE OF DECLARATION OF COVENANTS, CONDITIONS, AND RESTRICTIONS

NOTICE OF DECLARATION OF COVENANTS, CONDITIONS, AND RESTRICTIONS. THIS PROJECT, WITH ITS UNITS AND COMMON AREAS ARE SUBJECT TO CERTAIN COVENANTS, CONDITIONS, AND RESTRICTIONS AS CONTAINED IN THE DECLARATION OF COVENANTS, CONDITIONS AND RESTRICTIONS FOR THE LINDON'S EDGE OFFICE CONDOMINIUMS PLAT "A" - 1ST AMENDMENT , WHICH ARE RECORDED IN THE OFFICES OF THE UTAH COUNTY RECORDER, SAID COVENANTS, CONDITIONS, AND RESTRICTIONS ARE INTENDED TO RUN WITH THE LAND AND TO BE BINDING UPON ALL HEIRS, SUCCESSORS, OR ASSIGNS OF THE DECLARANT IN ACCORDANCE WITH THE RECORDED DECLARATION.

OCCUPANCY RESTRICTION NOTICE

IT IS UNLAWFUL TO OCCUPY ANY BUILDING LOCATED WITHIN THIS SUBDIVISION WITHOUT FIRST HAVING OBTAINED A CERTIFICATE OF OCCUPANCY ISSUED BY THE CITY.

SHEET 1 OF 4

SURVEYOR'S CERTIFICATE

I, AARON D. THOMAS, DO HEREBY CERTIFY THAT I AM A PROFESSIONAL LAND SURVEYOR, AND THAT I HOLD CERTIFICATE NO. 6418780 AS PRESCRIBED UNDER THE LAWS OF THE STATE OF UTAH. I FURTHER CERTIFY THAT AT THE REQUEST OF THE OWNERS OF THE BELOW DESCRIBED LAND, I PERFORMED A SURVEY OF SAID LAND, AND A CONDOMINIUM PLAT FOR LINDON'S EDGE OFFICE CONDOMINIUMS PLAT "A" - 1ST AMENDMENT. THAT THE DESCRIPTION BELOW CORRECTLY DESCRIBES THE LAND SURFACE UPON WHICH SAID CONDOMINIUM PROJECT HAS BEEN CONSTRUCTED, THAT SAID CONDOMINIUM PLAT COMPRISES FOUR (4) PAGES, IS ACCURATE, AND COMPLIES WITH THE PROVISIONS OF SECTION 57-8-13(1) OF THE UTAH CONDOMINIUM OWNERSHIP ACT. I FURTHER CERTIFY THAT THE REFERENCE MARKERS SHOWN ON THIS PLAT ARE LOCATED AS SHOWN AND ARE SUFFICIENT TO READILY RETRACE OR REESTABLISH THIS SURVEY.

DATE _____ (SEE SEAL BELOW)

BOUNDARY DESCRIPTION

Beginning at a point located North 0°11'51" West along section line 270.00 feet and West 27.00 feet from the Southeast Corner of Section 33, Township 5 South, Range 2 East, Salt Lake Base and Meridian;

thence along the northerly boundary of Lindon Treasury Plat "B" and extension thereof the following three courses and distances: 1) West 203.95 feet, 2) North 0°18'46" West 3.88 feet, and 3) South 89°35'17" West 123.31 feet; thence North 1°14'48" West along the easterly boundary of Lindon Treasury Plat "A" a distance of 193.64 feet; thence North 88°45'12" East 138.98 feet; thence North 01°14'48" West 154.60 feet; thence North 89°48'09" East 85.62 feet; thence South 76°36'39" East 47.73 feet; thence North 89°48'09" East 62.67 feet; thence South 00°11'51" East 343.64 feet to the point of beginning.

Area = 2.158 acres (94,023 s.f.)

OWNER'S CERTIFICATE AND DEDICATION

THE UNDERSIGNED OWNER(S) OF THE TRACT OF LAND DESCRIBED HEREON AS LINDON'S EDGE OFFICE CONDOMINIUMS PLAT "A" - 1ST AMENDMENT, A UTAH CONDOMINIUM PROJECT LOCATED ON SAID TRACT OF LAND, HAS CAUSED A SURVEY TO BE MADE AND THIS CONDOMINIUM PLAT CONSISTING OF FOUR (4) SHEETS TO BE PREPARED, SAID OWNER(S) HEREBY CONSENTS TO THE RECORDATION OF THIS CONDOMINIUM PLAT AND SUBMITS THIS PROPERTY TO THE UTAH CONDOMINIUM OWNERSHIP ACT, AND DOES HEREBY DESIGNATE ALL COMMON AREA FOR THE USE OF THE CONDOMINIUM OWNERS OF ALL COMMON UNITS WITHIN THIS UTAH CONDOMINIUM PROJECT, FOR INGRESS AND EGRESS.

THE SAME TRACT OF LAND HAS BEEN SUBDIVIDED INTO CONDOMINIUM UNITS, COMMON AREA, AND EASEMENTS, AND THE OWNER(S) HEREBY DEDICATES THOSE AREAS LABELED AS EASEMENTS FOR THE CONSTRUCTION AND MAINTENANCE OF PUBLIC UTILITIES.

IN WITNESS HEREOF, THE OWNER(S) HAS SIGNED THIS _____ DAY OF _____ 20___

BY: _____
BY: _____
BY: _____
BY: _____

ACKNOWLEDGMENT

STATE OF UTAH }
COUNTY OF UTAH } S.S.

ON THE _____ DAY OF _____, A.D. 20 _____, PERSONALLY APPEARED BEFORE ME THE SIGNERS OF THE FOREGOING CERTIFICATE AND DEDICATION WHO DULY ACKNOWLEDGED TO ME THAT THEY DID EXECUTE THE SAME IN THE CAPACITY INDICATED.

Commission Number_____ Signed (A Notary Public Commissioned in Utah)

Commission Expires _____ Print Name of Notary

ACCEPTANCE BY LEGISLATIVE BODY

THE CITY COUNCIL OF LINDON CITY, COUNTY OF UTAH, STATE OF UTAH, APPROVES THIS SUBDIVISION SUBJECT TO THE CONDITIONS AND RESTRICTIONS STATED HEREON, AND HEREBY ACCEPTS LINDON'S EDGE OFFICE CONDOMINIUMS PLAT "A" - 1ST AMENDMENT, A UTAH CONDOMINIUM PROJECT, IN ACCORDANCE WITH THE UTAH CONDOMINIUM OWNERSHIP ACT, THIS _____ DAY OF _____, 20____

MAYOR	CITY ATTORNEY
PLANNING COMMISSION CHAIR	COMMUNITY DEVELOPMENT DIRECTOR
CITY ENGINEER (See Seal Below)	CITY RECORDER (See Seal Below)

OCCUPANCY RESTRICTION NOTICE

IT IS UNLAWFUL TO OCCUPY ANY BUILDING LOCATED WITHIN THIS SUBDIVISION WITHOUT FIRST HAVING OBTAINED A CERTIFICATE OF OCCUPANCY ISSUED BY THE CITY OF LINDON.

CONDITIONS OF APPROVAL

PLAT "A" – 1ST AMENDMENT

LINDON'S EDGE

OFFICE CONDOMINIUMS

INCLUDING A VACATION OF BUILDINGS C & D OF LINDON'S EDGE OFFICE CONDOMINIUMS PLAT "A"

LINDON CITY, UTAH COUNTY, UTAH
SCALE: 1" = 40 FEET

LAND SURVEYOR:
AZTEC ENGINEERING
732 N. 780 W. AMERICAN FORK, UT. 84003
aztecengineering@gmail.com

SURVEYOR SEAL	NOTARY PUBLIC SEAL	CITY ENGINEER SEAL	CITY RECORDER SEAL	COUNTY RECORDER
PROFESSIONAL LAND SURVEYOR No. 6418780 AARON D. THOMAS STATE OF UTAH				

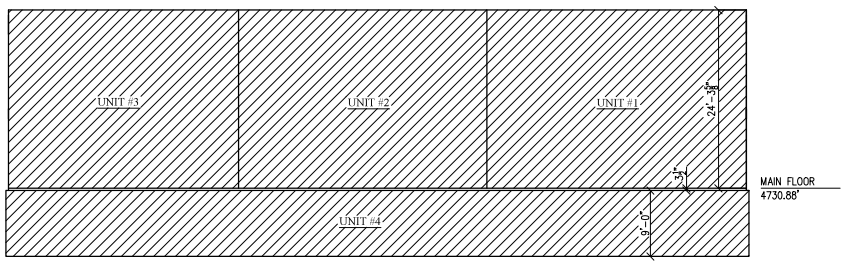

CROSS SECTION

LEGEND

COMMON AREAS & FACILITIES

PRIVATE AREA

GENERAL NOTES

1. ALL ANNOTATED BUILDING WALLS ARE PARALLEL WITH OR PERPENDICULAR TO EACH OTHER.
2. ALL BUILDING DIMENSIONS ARE TYPICAL.
3. UNIT AREAS SHOWN INCLUDE PRIVATE AREAS ONLY.
4. UNIT #4 (BASEMENT) IS APPROVED ONLY AS STORAGE.

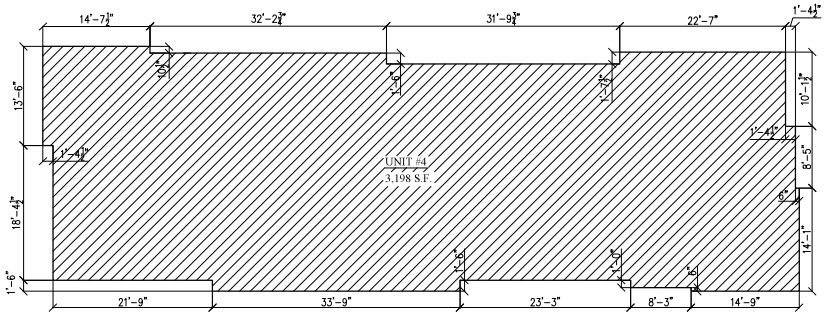

BASEMENT DIMENSIONED PLAN

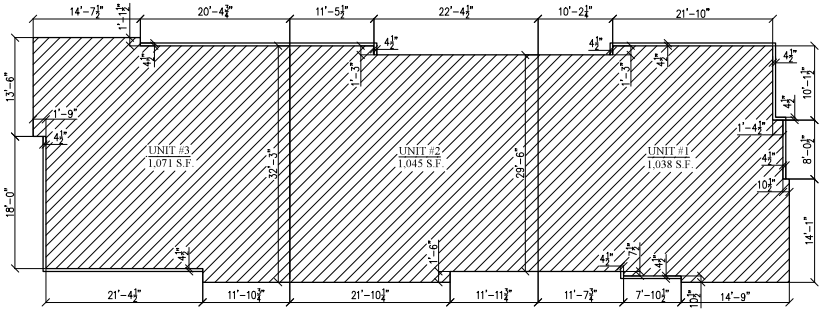

MAIN AND UPPER FLOOR DIMENSIONED PLAN

BUILDING A

Scale 1" = 8'

SHEET 2 OF 4

PLAT "A" – 1ST AMENDMENT

LINDON'S EDGE

OFFICE CONDOMINIUMS

LINDON CITY, UTAH COUNTY, UTAH

SCALE: 1" = 8 FEET

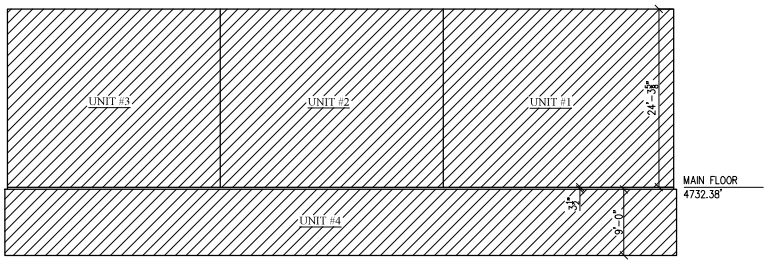

CROSS SECTION

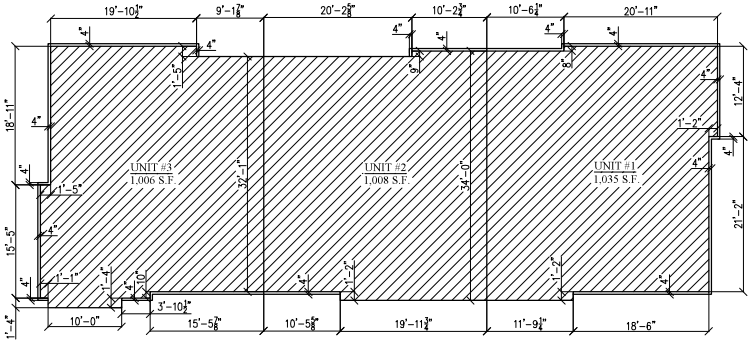

UPPER FLOOR DIMENSIONED PLAN

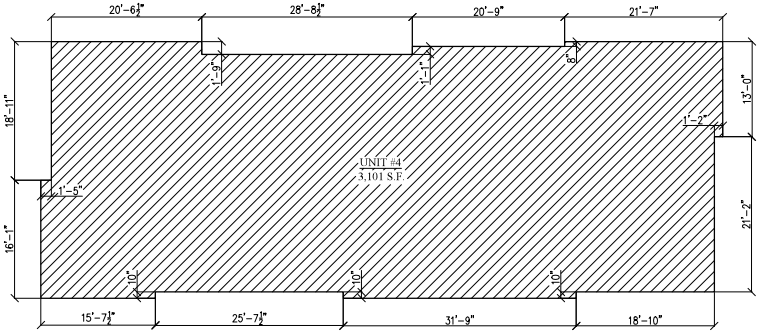

BASEMENT DIMENSIONED PLAN

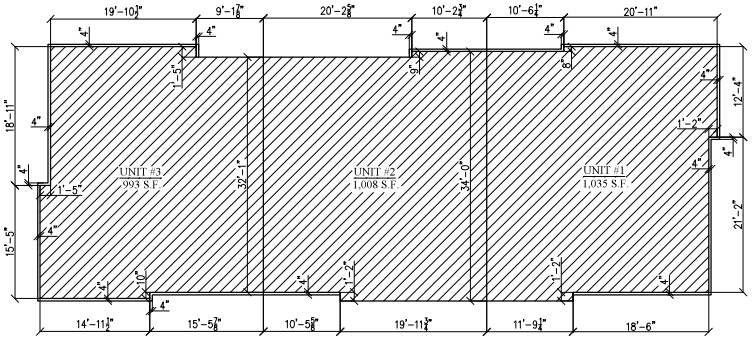

MAIN FLOOR DIMENSIONED PLAN

BUILDING B

LEGEND

COMMON AREAS & FACILITIES

PRIVATE AREA

GENERAL NOTES

1. ALL ANNOTATED BUILDING WALLS ARE PARALLEL WITH OR PERPENDICULAR TO EACH OTHER.
2. ALL BUILDING DIMENSIONS ARE TYPICAL.
3. UNIT AREAS SHOWN INCLUDE PRIVATE AREAS ONLY.
4. UNIT #4 (BASEMENT) IS APPROVED ONLY AS STORAGE.

8 4 0 8 16 24

Scale 1" = 8'

SHEET 3 OF 4

PLAT "A" – 1ST AMENDMENT

LINDON'S EDGE

OFFICE CONDOMINIUMS

LINDON CITY, UTAH COUNTY, UTAH

SCALE: 1" = 8 FEET

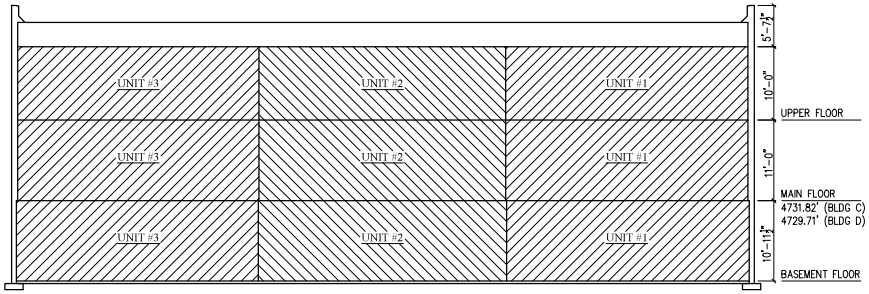

CROSS SECTION

LEGEND

COMMON AREAS & FACILITIES

PRIVATE AREA

GENERAL NOTES

1. ALL ANNOTATED BUILDING WALLS ARE PARALLEL WITH OR PERPENDICULAR TO EACH OTHER.
2. ALL BUILDING DIMENSIONS ARE TYPICAL.
3. UNIT AREAS SHOWN INCLUDE PRIVATE AREAS ONLY.

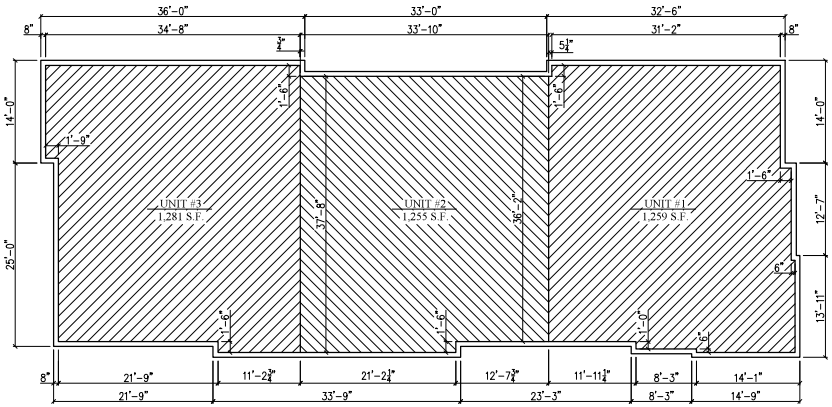

BASEMENT DIMENSIONED PLAN

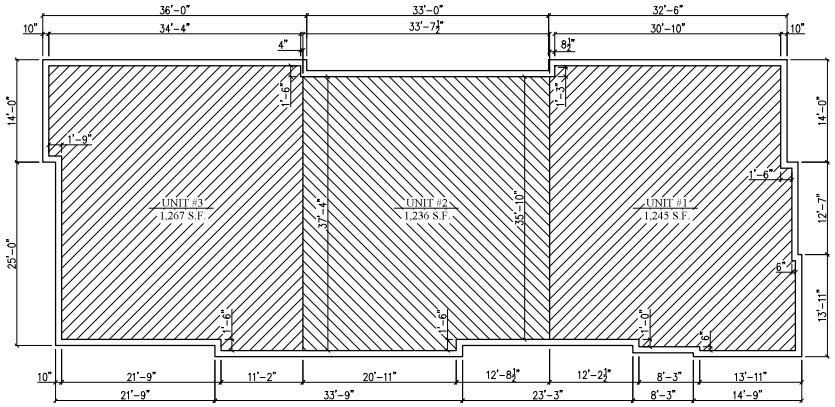

MAIN AND UPPER FLOOR DIMENSIONED PLAN

BUILDINGS C, D & F

8 4 0 8 16 24

Scale 1" = 8'

SHEET 4 OF 4

PLAT "A" – 1ST AMENDMENT

LINDON'S EDGE

OFFICE CONDOMINIUMS

LINDON CITY, UTAH COUNTY, UTAH

SCALE: 1" = 8 FEET

Exhibit 5 - Original Property Plat Amendment

LINDON'S EDGE PLAT "A"

LOCATED IN THE SOUTHEAST 1/4 OF SECTION 33, TOWNSHIP 5 SOUTH, RANGE 2 EAST, SALT LAKE BASE & MERIDIAN.
CITY OF LINDON, COUNTY OF UTAH,
STATE OF UTAH

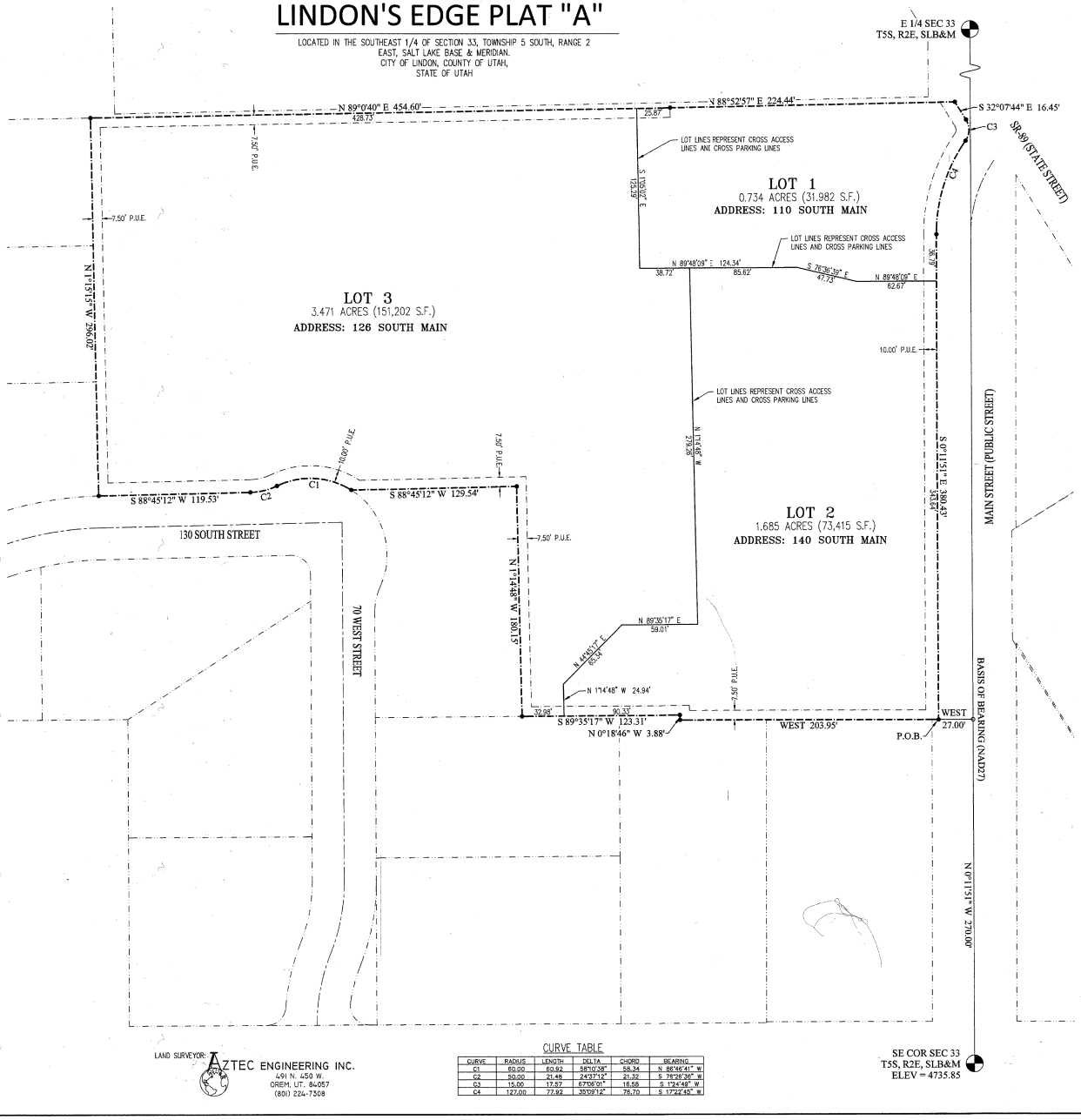

VICINITY MAP

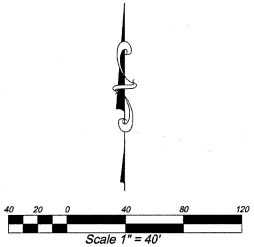

SURVEYOR'S CERTIFICATE

I, AARON D. THOMAS, DO HEREBY CERTIFY THAT I AM A PROFESSIONAL LAND SURVEYOR, AND THAT I HOLD CERTIFICATE NO. 6415780 AS PRESCRIBED UNDER THE LAWS OF THE STATE OF UTAH. I FURTHER CERTIFY BY AUTHORITY OF THE OWNER, I HAVE MADE A SURVEY OF THE TRACT OF LAND SHOWN ON THIS PLAT AND DESCRIBED BELOW, AND HAVE SUBDIVIDED SAID TRACT OF LAND IN TO LOTS, STREETS, AND EASEMENTS AND THE SAME HAS BEEN CORRECTLY SURVEYED AND STAKED ON THE GROUND AS SHOWN ON THIS PLAT AND THAT THIS PLAT IS TRUE, CORRECT AND ACCURATE.

BOUNDARY DESCRIPTION

Beginning at a point located North 0°11'51" West along section line 270.00 feet and West 27.00 feet from the Southeast Corner of Section 33, Township 5 South, Range 2 East, Salt Lake Base and Meridian; thence along the northerly boundary of Lindon Treasury Plat "B" and extension thereof the following three courses and distances: 1) West 203.95 feet, 2) North 0°18'46" West 3.88 feet, and 3) South 89°35'17" West 123.31 feet; thence North 1°14'48" West 180.15 feet; thence South 88°45'12" West 129.54 feet; thence along the arc of a 60.00 foot radius curve to the left 60.92 feet through a central angle of 58°10'38" (chord bears North 86°46'41" West 58.34 feet); thence along the arc of a 50.00 foot radius curve to the right 21.46 feet through a central angle of 24°37'12" (chord bears South 76°26'38" West 21.32 feet); thence South 88°45'12" West 119.53 feet; thence North 1°15'15" West 296.02 feet; thence North 89°00'40" East 454.60 feet; thence North 88°52'57" East along a fence line and extension thereof a distance of 224.44 feet; thence South 32°07'44" East 16.45 feet; thence along the arc of a 15.00 foot radius curve to the right through a central angle of 67°06'01" for 17.57 feet (chord bears South 01°24'49" West 16.58 feet); thence along the arc of a 127.00 foot radius curve to the left through a central angle of 35°09'12" for 77.92 feet (chord bears South 17°22'45" West 76.70 feet); thence South 0°11'51" East 380.43 feet to the point of beginning.

Area = 5.8907 Acres

AARON D. THOMAS (See Seal Below) — DATE: SEPT. 15, 2020

OWNER'S DEDICATION

KNOW ALL MEN BY THESE PRESENTS THAT THE UNDERSIGNED OWNER OF ALL OF THE PROPERTY DESCRIBED IN THE SURVEYOR'S CERTIFICATE HEREON AND SHOWN ON THIS PLAT, HAVE CAUSED A SURVEY AND THIS PLAT TO BE MADE OF THE PROPERTY AND HAVE CAUSED THE SAME TO BE SUBDIVIDED INTO LOTS, BLOCKS, STREETS AND EASEMENTS, AND DO HEREBY DEDICATE THE STREETS AND OTHER PUBLIC AREAS AS INDICATED HEREON FOR PERPETUAL USE OF THE PUBLIC. THE UNDERSIGNED OWNERS CONSENTS TO RECORDATION OF THIS PLAT.

IN WITNESS HEREOF WE HAVE HEREUNTO SET OUR HANDS THIS 29th DAY OF September, A.D. 2020

LINDON'S EDGE LLC — Eric Barcelo — BY: Manager
Steve Davis — BY: Manager
CASTLE PARK PROPERTIES, LLC — BY: Eric Barcelo, Manager
BY:
BY:

ACKNOWLEDGMENT

STATE OF UTAH } S.S.
COUNTY OF UTAH

ON THE 29th DAY OF September, A.D. 2020 PERSONALLY APPEARED BEFORE ME THE SIGNERS OF THE FOREGOING CERTIFICATE AND DEDICATION WHO DULY ACKNOWLEDGED TO ME THAT THEY DID EXECUTE THE SAME IN THE CAPACITY INDICATED.

Commission Number 702360 — Signed (A Notary Public Commissioned in Utah)

Commission Expires 09/18/2022 — Tamara Davies, Print Name of Notary

ACCEPTANCE BY LEGISLATIVE BODY

THE CITY OF LINDON, COUNTY OF UTAH, APPROVES THIS SUBDIVISION SUBJECT TO THE CONDITIONS AND RESTRICTIONS STATED HEREON, AND HEREBY ACCEPTS THE DEDICATION OF ALL STREETS, EASEMENTS, AND OTHER PARCELS OF LAND INTENDED FOR PUBLIC PURPOSES FOR THE PERPETUAL USE OF THE PUBLIC THIS 19 DAY OF October, A.D. 2020

MAYOR — CITY ATTORNEY
PLANNING COMMISSION CHAIR — PLANNING DIRECTOR
CITY ENGINEER (See Seal Below) — CITY RECORDER (See Seal Below)

OCCUPANCY RESTRICTION NOTICE

IT IS UNLAWFUL TO OCCUPY ANY BUILDING LOCATED WITHIN THIS SUBDIVISION WITHOUT FIRST HAVING OBTAINED A CERTIFICATE OF OCCUPANCY ISSUED BY THE CITY OF LINDON.

CONDITIONS OF APPROVAL

17542

LINDON'S EDGE
PLAT "A"
INCLUDING A VACATION OF LOT 1 OF LINDON TREASURY PLAT "A"
LINDON CITY — UTAH COUNTY, UTAH
SCALE: 1" = 40' FEET

SURVEYOR SEAL — NOTARY PUBLIC SEAL — CITY ENGINEER SEAL — CITY RECORDER SEAL

COUNTY RECORDER
ENT 24622:2021 Rec # 17542
ANDREA ALLEN
UTAH COUNTY RECORDER
2021 Feb 11 11:45 am FEE 56.00 BY RA
RECORDED FOR LINDON CITY CORPORATION

LAND SURVEYOR: AZTEC ENGINEERING INC.
491 N. 450 W.
OREM, UT. 84057
(801) 224-7308

CURVE TABLE

CURVE	RADIUS	LENGTH	DELTA	CHORD	BEARING
C1	60.00	60.92	58°10'38"	58.34	N. 86°46'41" W
C2	50.00	21.46	24°37'12"	21.32	S. 76°26'38" W
C3	15.00	17.57	67°06'01"	16.58	S. 1°24'49" W
C4	127.00	77.92	35°09'12"	76.70	S. 17°22'45" W

SEC 33, T5S, R2E, SLB&M TU-080 BM
(Lot 1, Lindon Treasury Plat A)

Exhibit 6 - Original Condominium Plat

LINDON'S EDGE OFFICE CONDOMINIUMS PLAT "A"

LOCATED IN THE SOUTHEAST 1/4 OF SECTION 33, TOWNSHIP 5 SOUTH, RANGE 2
EAST, SALT LAKE BASE & MERIDIAN.
CITY OF LINDON, COUNTY OF UTAH,
STATE OF UTAH

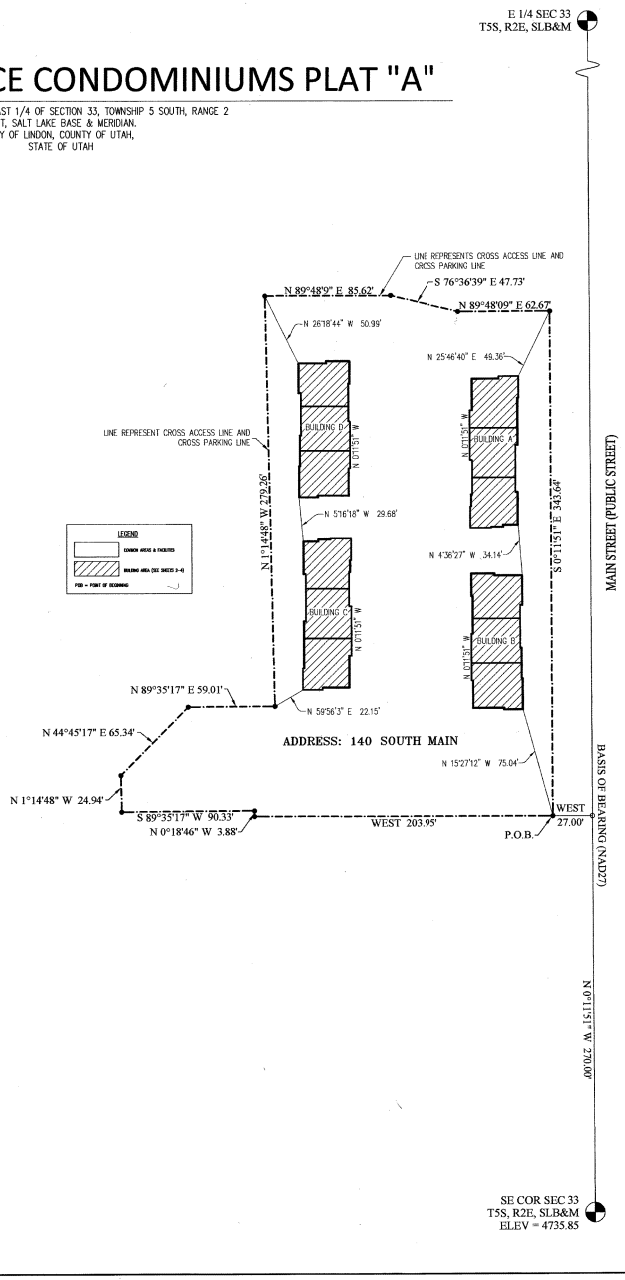

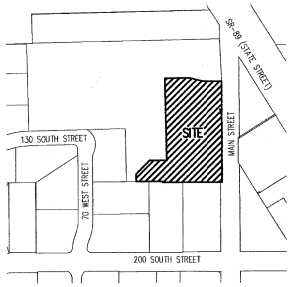

VICINITY MAP

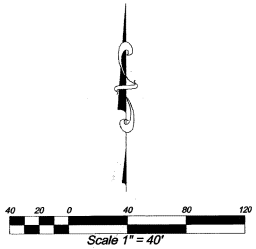

PUBLIC UTILITY EASEMENT NOTE

ALL COMMON AREA SHOWN ON THIS PLAT IS DESIGNATED AS A PUBLIC UTILITY EASEMENT.

RESERVATION OF COMMON AREAS

THE OWNERS IN RECORDING THIS CONDOMINIUM PLAT OF LINDON'S EDGE OFFICE CONDOMINIUMS PLAT "A", A UTAH CONDOMINIUM PROJECT, HAVE DESIGNATED CERTAIN AREAS OF LAND AS PRIVATE, COMMON AREAS AND COMMON AREAS FOR PUBLIC UTILITY EASEMENTS, INTENDED FOR THE USE BY THE CONDOMINIUM OWNERS IN LINDON'S EDGE OFFICE CONDOMINIUMS PLAT "A" FOR INGRESS, BUSINESS AND OTHER RELATED ACTIVITIES. THE DESIGNATED AREAS ARE NOT DEDICATED HEREBY FOR USE BY THE GENERAL PUBLIC BUT ARE RESERVED FOR THE COMMON USE AND ENJOYMENT OF THE CONDOMINIUM OWNERS IN THE LINDON'S EDGE OFFICE CONDOMINIUMS PLAT "A", SAID DECLARATION OF COVENANTS, CONDITIONS AND RESTRICTION IS HEREBY INCORPORATED AND MADE A PART OF THIS CONDOMINIUM PLAT AND BECOMES EFFECTIVE UPON THE DATE THAT THIS CONDOMINIUM PLAT IS RECORDED IN THE OFFICIAL RECORDS OF UTAH COUNTY, UTAH.

NOTICE OF DECLARATION OF COVENANTS, CONDITIONS, AND RESTRICTIONS

NOTICE OF DECLARATION OF COVENANTS, CONDITIONS, AND RESTRICTIONS. THIS PROJECT, WITH ITS UNITS AND COMMON AREAS ARE SUBJECT TO CERTAIN COVENANTS, CONDITIONS, AND RESTRICTIONS AS CONTAINED IN THE DECLARATION OF COVENANTS, CONDITIONS AND RESTRICTIONS FOR THE LINDON'S EDGE OFFICE CONDOMINIUMS PLAT "A", WHICH ARE RECORDED IN THE OFFICES OF THE UTAH COUNTY RECORDER, SAID COVENANTS, CONDITIONS, AND RESTRICTIONS ARE INTENDED TO RUN WITH THE LAND AND TO BE BINDING UPON ALL HEIRS, SUCCESSORS, OR ASSIGNS OF THE DECLARANT IN ACCORDANCE WITH THE RECORDED DECLARATION.

OCCUPANCY RESTRICTION NOTICE

IT IS UNLAWFUL TO OCCUPY ANY BUILDING LOCATED WITHIN THIS SUBDIVISION WITHOUT FIRST HAVING OBTAINED A CERTIFICATE OF OCCUPANCY ISSUED BY THE CITY.

SHEET 1 OF 4

LAND SURVEYOR: AZTEC ENGINEERING INC.
732 N. 780 W.
AMERICAN FORK, UT. 84003
(801) 224-7308

SURVEYOR'S CERTIFICATE

I, AARON D. THOMAS, DO HEREBY CERTIFY THAT I AM A PROFESSIONAL LAND SURVEYOR, AND THAT I HOLD CERTIFICATE NO. 6418780 AS PRESCRIBED UNDER THE LAWS OF THE STATE OF UTAH. I FURTHER CERTIFY THAT AT THE REQUEST OF THE OWNERS OF THE BELOW DESCRIBED LAND, I PERFORMED A SURVEY OF SAID LAND, AND A CONDOMINIUM PLAT FOR LINDON'S EDGE OFFICE CONDOMINIUMS PLAT "A". THAT THE DESCRIPTION BELOW CORRECTLY DESCRIBES THE LAND SURFACE UPON WHICH SAID CONDOMINIUM PROJECT HAS BEEN CONSTRUCTED. THAT SAID CONDOMINIUM PLAT COMPRISES FOUR (4) PAGES, IS ACCURATE, AND COMPLIES WITH THE PROVISIONS OF SECTION 57-8-13(1) OF THE UTAH CONDOMINIUM OWNERSHIP ACT. I FURTHER CERTIFY THAT THE REFERENCE MARKERS SHOWN ON THIS PLAT ARE LOCATED AS SHOWN AND ARE SUFFICIENT TO READILY RETRACE OR REESTABLISH THIS SURVEY.

Nov. 17, 2021
DATE

(SEE SEAL BELOW)

BOUNDARY DESCRIPTION

Beginning at a point located North 0°11'51" West along section line 270.00 feet and West 27.00 feet from the Southeast Corner of Section 33, Township 5 South, Range 2 East, Salt Lake Base and Meridian;

thence along the northerly boundary of Lindon Treasury Plat "B" and extension thereof the following three courses and distances: 1) West 203.95 feet, 2) North 0°18'46" West 3.88 feet, and 3) South 89°35'17" West 90.33 feet; thence North 01°14'48" West 24.94 feet; thence North 44°45'17" East 65.34 feet; thence North 89° 35'17" East 59.01 feet; thence North 01°14'48" West 279.26 feet; thence North 89°48'09" East 85.62 feet; thence South 76°36'39" East 47.73 feet; thence North 89°48'09" East 62.67 feet; thence South 00°11'51" East 343.64 feet to the point of beginning.

Area = 1.6854 acres (73,415 s.f.)

AARON D. THOMAS
(See Seal Below)

Nov. 17, 2021
DATE

OWNER'S CERTIFICATE AND DEDICATION

THE UNDERSIGNED OWNER(S) OF THE TRACT OF LAND DESCRIBED HEREON AS LINDON'S EDGE OFFICE CONDOMINIUMS PLAT "A", A UTAH CONDOMINIUM PROJECT LOCATED ON SAID TRACT OF LAND, HAS CAUSED A SURVEY TO BE MADE AND THIS CONDOMINIUM PLAT CONSISTING OF FOUR (4) SHEETS TO BE PREPARED, SAID OWNER(S) HEREBY CONSENTS TO THE RECORDATION OF THIS CONDOMINIUM PLAT AND SUBMITS THIS PROPERTY TO THE UTAH CONDOMINIUM OWNERSHIP ACT, AND DOES HEREBY DESIGNATE ALL COMMON AREA FOR THE USE OF THE CONDOMINIUM OWNERS OF ALL COMMON UNITS WITHIN THIS UTAH CONDOMINIUM PROJECT, FOR INGRESS AND EGRESS.

THE SAME TRACT OF LAND HAS BEEN SUBDIVIDED INTO CONDOMINIUM UNITS, COMMON AREA, AND EASEMENTS, AND THE OWNER(S) HEREBY DEDICATES THOSE AREAS LABELED AS EASEMENTS FOR THE CONSTRUCTION AND MAINTENANCE OF PUBLIC UTILITIES.

IN WITNESS HEREOF, THE OWNER(S) HAS SIGNED THIS 18th DAY OF NOVEMBER 2021

LINDON'S EDGE, LLC — BY: Steve Davis, MANAGER Steve Davis

BY:

BY:

BY:

ACKNOWLEDGMENT

STATE OF UTAH
COUNTY OF UTAH } S.S.

ON THE 18th DAY OF November, A.D. 2021 PERSONALLY APPEARED BEFORE ME THE SIGNERS OF THE FOREGOING CERTIFICATE AND DEDICATION WHO DULY ACKNOWLEDGED TO ME THAT THEY DID EXECUTE THE SAME IN THE CAPACITY INDICATED.

Commission Number 717875

Signed (A Notary Public Commissioned in Utah)

Commission Expires June 15, 2025

Amber Burke
Print Name of Notary

AMBER BURKE
Notary Public - State of Utah
Comm. No. 717875
My Commission Expires on June 15, 2025

ACCEPTANCE BY LEGISLATIVE BODY

THE CITY COUNCIL OF LINDON CITY, COUNTY OF UTAH, STATE OF UTAH, APPROVES THIS PLAT SUBJECT TO THE CONDITIONS AND RESTRICTIONS STATED HEREON, AND HEREBY ACCEPTS LINDON'S EDGE OFFICE CONDOMINIUMS PLAT "A", A UTAH CONDOMINIUM PROJECT, IN ACCORDANCE WITH THE UTAH CONDOMINIUM OWNERSHIP ACT, THIS 2 DAY OF December 20 21

MAYOR

CITY ATTORNEY

PLANNING COMMISSION CHAIR

PLANNING DIRECTOR

CITY ENGINEER
(See Seal Below)

CITY RECORDER
(See Seal Below)

OCCUPANCY RESTRICTION NOTICE

IT IS UNLAWFUL TO OCCUPY ANY BUILDING LOCATED WITHIN THIS SUBDIVISION WITHOUT FIRST HAVING OBTAINED A CERTIFICATE OF OCCUPANCY ISSUED BY THE CITY OF LINDON.

CONDITIONS OF APPROVAL

PLAT "A"

LINDON'S EDGE
OFFICE CONDOMINIUMS

INCLUDING A VACATION OF LOT 2 OF LINDON'S EDGE PLAT "A"

LINDON CITY — UTAH COUNTY, UTAH
SCALE: 1" = 40 FEET

SURVEYOR'S SEAL — PROFESSIONAL LAND SURVEYOR, AARON D. THOMAS, No. 6418780, 11-17-21, STATE OF UTAH

NOTARY PUBLIC SEAL

CITY ENGINEER SEAL — CITY LINDON ENGINEER

CITY RECORDER SEAL — LINDON CITY Seal UTAH COUNTY, UTAH

COUNTY RECORDER
ENT 214028:2021 Fee: $ 180.00
ANDREA ALLEN
UTAH COUNTY RECORDER
2021 Dec 29 12:44 pm FEE 332.00 BY BR
RECORDED FOR LINDON CITY CORPORATION

Sec. 33, T5S, R2E BM (Vacation of Lot 2 Of Lindon's Edge Plat A) TU 080

18098 1 of 4

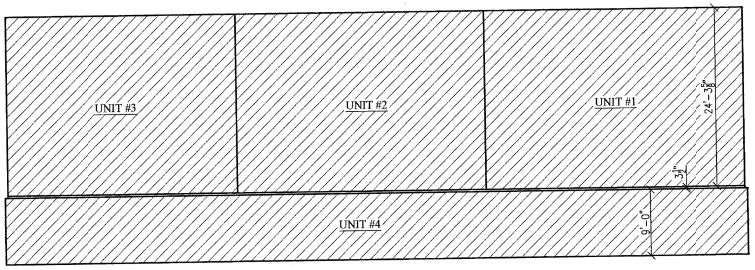

CROSS SECTION

LEGEND

COMMON AREAS & FACILITIES

PRIVATE AREA

GENERAL NOTES

1. ALL ANNOTATED BUILDING WALLS ARE PARALLEL WITH OR PERPENDICULAR TO EACH OTHER.
2. ALL BUILDING DIMENSIONS ARE TYPICAL.
3. UNIT AREAS SHOWN INCLUDE PRIVATE AREAS ONLY.

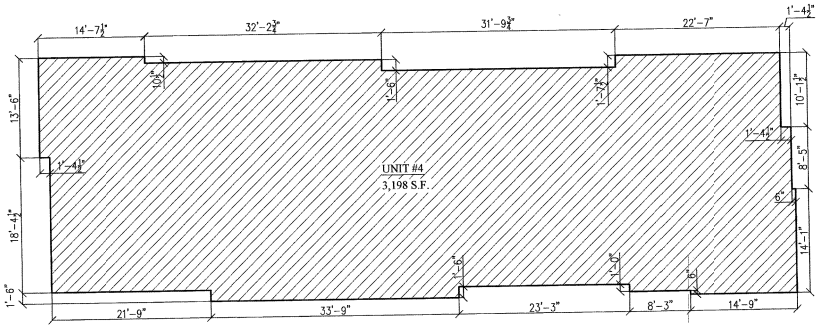

BASEMENT DIMENSIONED PLAN

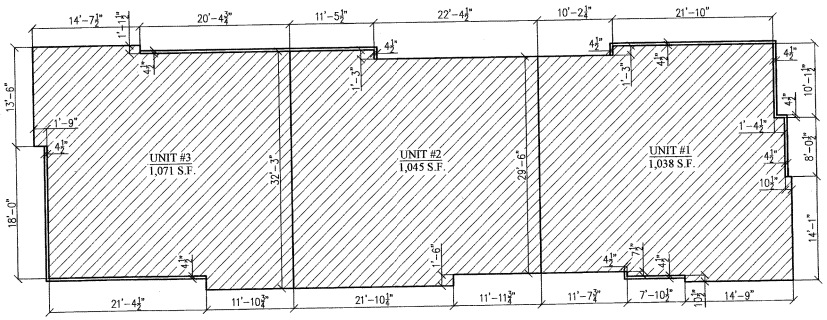

MAIN AND UPPER FLOOR DIMENSIONED PLAN

BUILDINGS A & C

ENT 214028:2021 Mon 8 Nov 08
ANDREA ALLEN
UTAH COUNTY RECORDER
2021 Dec 29 12:44 pm FEE 232.00 BY JR
RECORDED FOR LINDON CITY CORPORATION

18098

18098 2 of 4

SHEET 2 OF 4

8 4 0 8 16 24
Scale 1" = 8'

PLAT "A"

LINDON'S EDGE

OFFICE CONDOMINIUMS

LINDON CITY, UTAH COUNTY, UTAH

SCALE: 1" = 8 FEET

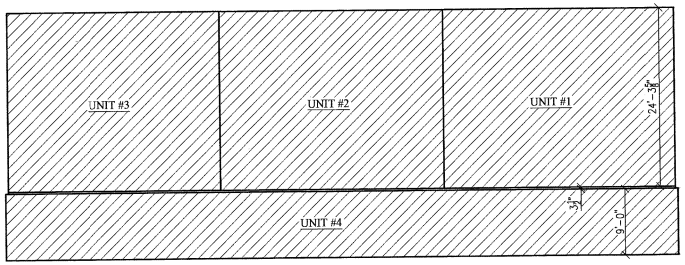

CROSS SECTION

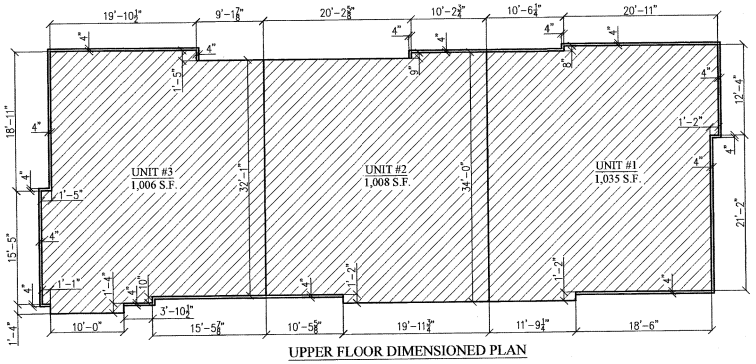

UPPER FLOOR DIMENSIONED PLAN

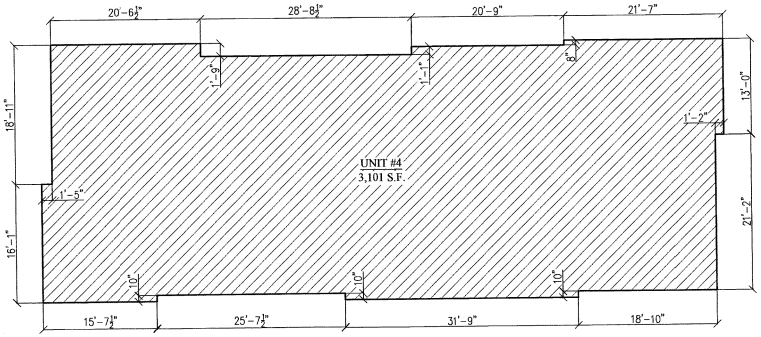

BASEMENT DIMENSIONED PLAN

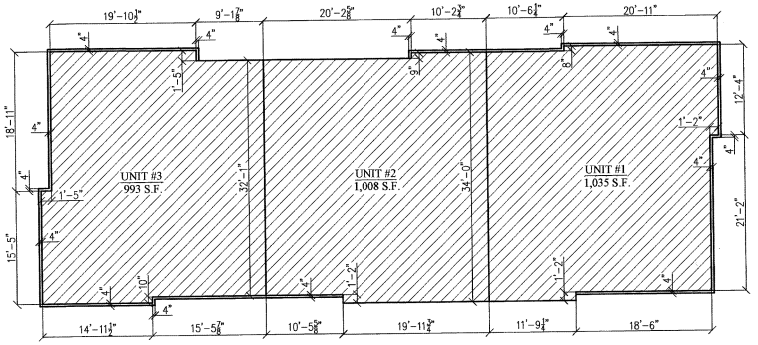

MAIN FLOOR DIMENSIONED PLAN

BUILDING B

LEGEND

COMMON AREAS & FACILITIES

PRIVATE AREA

GENERAL NOTES

1. ALL ANNOTATED BUILDING WALLS ARE PARALLEL WITH OR PERPENDICULAR TO EACH OTHER.
2. ALL BUILDING DIMENSIONS ARE TYPICAL.
3. UNIT AREAS SHOWN INCLUDE PRIVATE AREAS ONLY.

ENT 214028:2021 Map # 13078
ANDREA ALLEN
UTAH COUNTY RECORDER
2021 Dec 29 12:44 pm FEE 222.00 BY JR
RECORDED FOR LINDON CITY CORPORATION

18098

8 4 0 8 16 24
Scale 1" = 8'

18098 3 OF 4

SHEET 3 OF 4

PLAT "A"

LINDON'S EDGE

OFFICE CONDOMINIUMS

LINDON CITY, UTAH COUNTY, UTAH

SCALE: 1" = 8 FEET

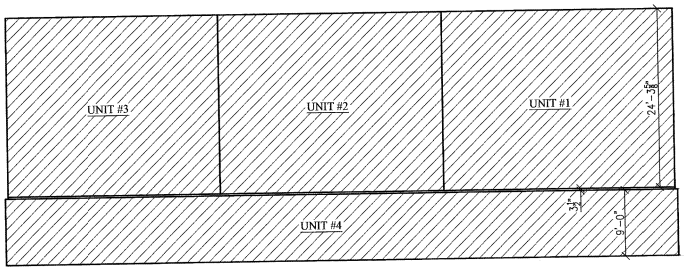

CROSS SECTION

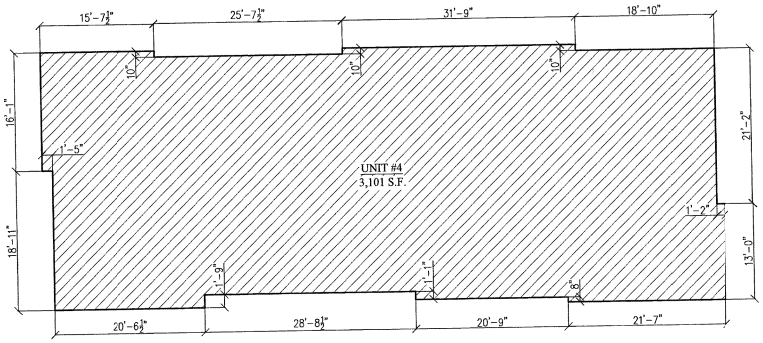

BASEMENT DIMENSIONED PLAN

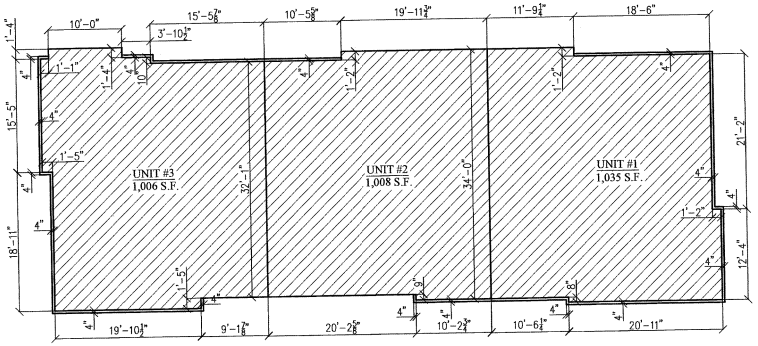

UPPER FLOOR DIMENSIONED PLAN

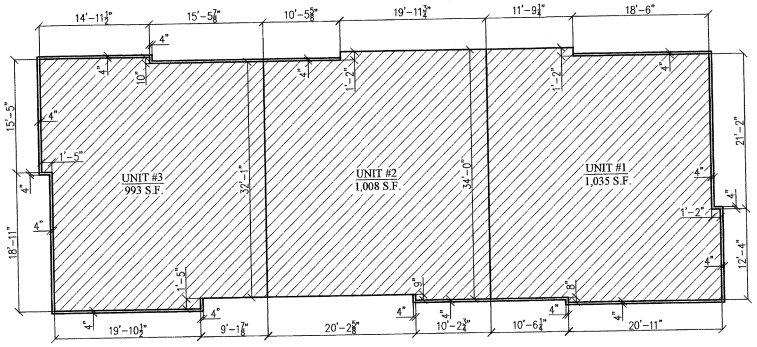

MAIN FLOOR DIMENSIONED PLAN

LEGEND

COMMON AREAS & FACILITIES

PRIVATE AREA

GENERAL NOTES

1. ALL ANNOTATED BUILDING WALLS ARE PARALLEL WITH OR PERPENDICULAR TO EACH OTHER.
2. ALL BUILDING DIMENSIONS ARE TYPICAL.
3. UNIT AREAS SHOWN INCLUDE PRIVATE AREAS ONLY.

BUILDING D

ENT 214025:2021 Page 4 OF 8
ANDREA ALLEN
UTAH COUNTY RECORDER
2021 Dec 29 12:44 pm FEE 232.00 BY JR
RECORDED FOR LINDON CITY CORPORATION

180984

8 4 0 8 16 24
Scale 1" = 8'

180984 of 4

SHEET 4 OF 4

PLAT "A"

LINDON'S EDGE

OFFICE CONDOMINIUMS

LINDON CITY, UTAH COUNTY, UTAH

SCALE: 1" = 8 FEET

Item 7: A request to amend the Lindon City General Plan Street Master Plan Map by reducing the width of the future 1200 E. road expansion behind the homes located at: 663 E. 770 N., 677 E. 770 N., 689 E. 770 N., 771 E. 770 N.

Date: August 25, 2026

Parcels 17:015:0141

Applicant: David Gardner

City File Number: 26-013-6

Type of Decision: Legislative
Council Action Required: Yes, the planning commission is the recommending authority to the city council for this application

Presenting Staff: Michael Florence

Summary of Key Issues

Whether to approve a request to amend the Lindon City General Plan Street Master Plan Map by reducing the future 800 N./1200 E road segment width behind the four homes at 663 E. 770 N., 677 E. 770 N., 689 E. 770 N., 771 E. 770 N.

The land use application submitted by the applicant does not identify which street designation, as established in the Lindon City General Plan and the Lindon City Land Development Policies, Standard Specifications and Drawings Manual (Development Manual), is being requested for the reduced-width section of the future roadway.

Overview

The Lindon City General Plan Street Master Plan Map and the Lindon City Land Development Policies, Standard Specifications and Drawings Manual identify the below classifications for city-owned and maintained streets and establish the corresponding standard cross-section widths. The applicable cross-sections are also included as Exhibit 3.

- Major Arterial: 66’
- Minor Arterial: 66’
- Major Collector: 66’
- Minor Collector: 66’
- Local: 50’

A majority of the concerns expressed by the adjacent property owners regarding the future roadway relate to the partial right-of-way that was dedicated to Lindon City as part of the Highlands at Bald Mountain subdivision. Directly behind the four homes that are the subject of this General Plan amendment request, approximately 14 feet of right-of-way was dedicated to the City for the future roadway. The subdivision plats also include slope and construction easements on portions of the adjacent residential properties to accommodate construction of the future roadway.

The future 800 N./1200 E. roadway is currently designated as a Minor Arterial on the Lindon City General Plan Street Master Plan Map. This designation was adopted by the Planning Commission and City Council in July 2025. Prior to that change, the roadway was designated as a Major Collector. Both classifications have an adopted 66-foot cross-section.

Last year, Lindon City engineers evaluated the General Plan Street Master Plan Map and determined that several roadways within Lindon City that are currently classified as Major Collectors are more regionally significant roadways as they carry larger volumes of traffic and provide connections between multiple jurisdictions, and/or provide connections between two or more state highways, and those roads would more appropriately be classified as arterials.

Another reason for the change was to enable these roadways to potentially be eligible for State or Federal funding as needed for construction, intersection improvements, congestion relief projects, etc. Lindon City coordinated with Mountainland Association of Governments (MAG) and determined that regionally significant roadways may be eligible for road construction and traffic congestion relief, but only if such roadways are classified as arterial roads (minor or major).

Historical Background

- 1963: the Utah State Highway Department, in cooperation with Utah County and other municipalities within the county (including Lindon), began a study of the highway and street circulation system throughout the entire county. This study was published as the Provo Area Transportation Study.
- 1968 - Lindon City adopted, as part of the general plan, the future alignment of Bonneville Drive along the foothills, later to be identified as 800 N./1200 E.
- 1976, 1995, 2000, 2011, 2023 –Lindon City readopted its general plan, making minor adjustments to the 800 N./1200 E. alignment.
- The future Minor Arterial Street is also included on Pleasant Grove's General Plan Roadway Master Plan as 1000 S.
- The southern segment of 1200 E. was dedicated and constructed as part of the Canberra Hills development. 1200 E, began to be platted in 1992 with construction beginning shortly after.
- 1995 & 2004, Lindon City hired an engineering consultant to draft preliminary road designs for the 800 N./1200 E. Major Connector Street.
- 2025 – the Lindon City Council and Planning Commission voted in favor of keeping the future 800 N./1200 E. roadway on the General Plan Street Master Plan Map.

Previous Consideration and Coordination with Pleasant Grove

In late 2024, David Gardner submitted an application requesting that the future 800 N./1200 E. roadway be removed from the Lindon City General Plan Street Master Plan Map. Following a public engagement meeting, public hearing, and public meetings regarding the application, both the Planning Commission and City Council determined in early 2025 that the future roadway should remain on the Street Master Plan Map.

Following the City Council's decision to retain 800 N./1200 E. on the Street Master Plan Map, City representatives met with Pleasant Grove City to discuss the possibility of developing a modified cross-section for the future roadway. Both cities expressed support for exploring a narrower asphalt width while maintaining the existing 66-foot right-of-way and overall cross-section width. The 66' modified right-of-way width discussed between the two cities still uses the same established right-of-way.

The alternative concept cross-section discussed between the two cities has not been formally adopted. At the time, Pleasant Grove City was working with a developer who was supportive of the proposed cross-section modification; however, that developer has since withdrawn from the project.

A significant consideration for any modification to the future roadway is that approximately 80 percent of the future 800 N. roadway is located within Pleasant Grove City's jurisdiction. Consequently, Lindon City cannot establish a modified roadway cross-section for the entire future roadway without coordinating with and obtaining the necessary approval from Pleasant Grove City.

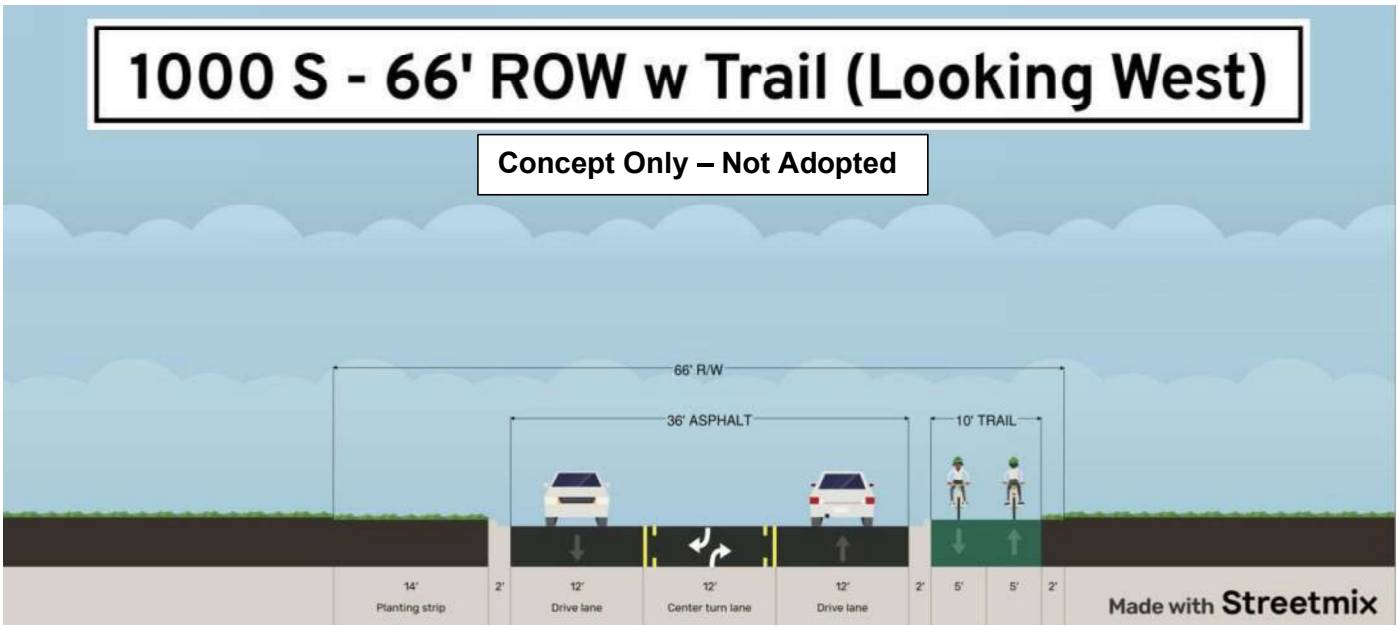

Lindon City General Plan

When considering amendments to the General Plan or zoning modifications, decision-makers should review relevant policy recommendations found in the General Plan. The Transportation Chapter of the General Plan outlines:

- Policy 1.2 – Ensure that the city retains overall control over the design and location of the major street system within future growth areas.
  - Implementation Measure - Require adequate thoroughfare systems within future growth areas and designate sufficient rights-of-way prior to land development or through the plan approval process.
  - Implementation Measure - Secure rights-of-way prior to or concurrent with land development.
  - Implementation Measure – Require traffic impact analysis when deemed necessary by the city engineer.
- Goal 3 Implementation Measure – Design and install local streets to discourage through-traffic in residential neighborhoods, directing traffic to higher-capacity classifications.

Staff Analysis

Lindon City's General Plan and Development Manual establish standard street classifications and cross-sections for city-owned and maintained streets. Major and Minor Arterials and Major and Minor Collectors all have an adopted 66-foot cross-section, while Local Streets have an adopted 50-foot cross-section.

The applicant's request does not identify a proposed street classification or cross-section for the portion of the future 800 N./1200 E. roadway that the applicant is requesting to reduce. As a result, the City is unable to determine what specific amendment to the General Plan Street Master Plan Map is being requested or evaluate the proposal against an identified street standard.

City staff met with Mr. Gardner and his neighbors on July 20, 2026, and explained the general plan and development manual street designations and that the application was missing information on how they wanted to see the future street reduced in width and what designation they were requesting. At the meeting, City Staff suggested that the submitted application was premature and to continue letting the two cities work on the modified cross-section. City staff reached out on July 30th about a response to the application question. City staff did not receive a response about the street designation, but the application was paid for, so the city scheduled this item for a public hearing on August 25, 2026.

Staff Recommendation

Based on the information submitted with the application and the issues outlined above, City staff recommends that the Planning Commission make a recommendation of denial to the City Council to amend the General Plan Street Master Plan Map and Development Manual to reduce the width of the future 800 N./1200 E. roadway.

The application does not identify the proposed street classification or cross-section necessary for the Planning Commission to evaluate the requested amendment. Additionally, the future roadway is currently designated as a Minor Arterial with a 66-foot cross-section, and any reduction in the planned cross-section should be coordinated with Pleasant Grove City because the majority of the future roadway is located within its jurisdiction.

Staff recognizes that there may be opportunities to develop a modified roadway design that addresses concerns of the adjacent property owners while maintaining the transportation function of 800 N./1200 E. Lindon City has previously discussed such alternatives with Pleasant Grove City.

Exhibits

1. Aerial Photo with Future 800 N./1200 E. Road Alignment
2. Applicant request
3. Arterial, Collector, and Local Street Cross-sections
4. Current Street Master Plan Map

Exhibit 1

Exhibit 2 – Applicant's Request

We are requesting a proposed amendment to the Lindon General Master Plan. We would like to request that the plan be amended to shrink the size of the connector road behind the following homes:
- 663 E. 770 N. (Gardner)
- 677 E. 770 N. (Gardner)
- 689 E. 770 N. (Svendsen)
- 771 E. 770 N. (Harsh)

Last year, we requested that the entire collector road be removed from the general plan. This time we ask only that a 10-15' strip be removed from approximately 650 E. to 747 E. - and the east bench collector is not eliminated. See attached charts and visuals. No plat amendment or removal of existing slope easements is requested at this time. Only a narrow strip sitting in Lindon will be removed to allow that portion of the major collector to be developed, managed, and maintained under the jurisdiction of Pleasant Grove City, which is consistent with the Pleasant Grove 2040 Roadway Master Plan.

We believe this amendment should be made for the following reasons:
1. Lack of necessity. The Feb. 13th Hales engineering traffic study concluded that both the No Build and Build scenarios are anticipated to keep 400 east and 1200 east at acceptable LOS. "It is not anticipated that the completion of the 1200 East connection is necessary from a traffic and operations perspective." The proposed road fails to connect vital infrastructure, and Lindon does not have significant traffic congestion anywhere, certainly not on the east side.
2. By amending the plan, there is better alignment with Pleasant Grove City's roadway master plan.
3. The proposed amendment results in better, more practical management with PG city. If the narrow strip is kept within Lindon City, there would need to be an interlocal agreement of some sort with PG City. This would mean PG and Lindon would have to constantly coordinate maintenance, repair, and upkeep, which could lead to friction, disputes, and higher management and administrative costs.
4. Shrinking the collector road would be consistent with the Lindon City General Master Plan goals, policies, and objectives. Policy 3.1 in the Lindon General Plan states "Minimize non-local and commercial traffic within our residential neighborhoods" and "to discourage through-traffic in residential neighborhoods".
5. The proposed amendment avoids the challenges the City faced in the prior application request to remove the entire corridor. In those meetings, Lindon staff reported that one of the challenges of removing the major collector road was "if the land is not used for the intended transportation corridor, then the Corridor Preservation Fund must be repaid at the current appraised value. This also includes any surplus land if the road were to be shifted or realigned". After requesting and reviewing all documentation regarding these transactions referred to in prior meetings, it has come to our attention that there is no evidence or legal authority of which we are aware of that would require the City to repay the Corridor Preservation Fund for the small realignment that does not entirely abandon the project.

In short, we believe this amendment to shrink the size of the major connector road in the northeast of Lindon city aligns with the city's stated development goals and allows the residents in these homes and neighborhoods to avoid a road running so closely to their homes. We believe this to be a strong compromise between keeping Lindon City and the applicants.

Exhibit 3

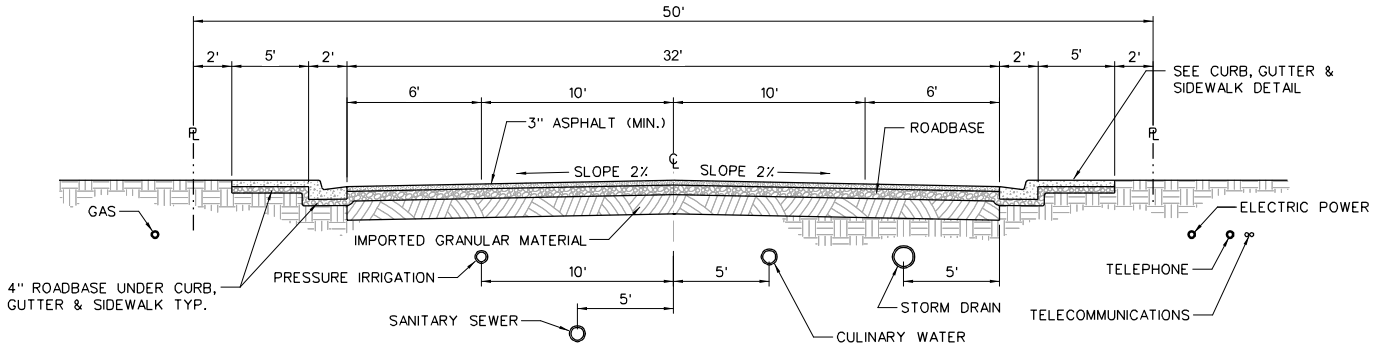

LOCAL RESIDENTIAL
50' STREET CROSS-SECTION
LOOKING NORTH OR WEST

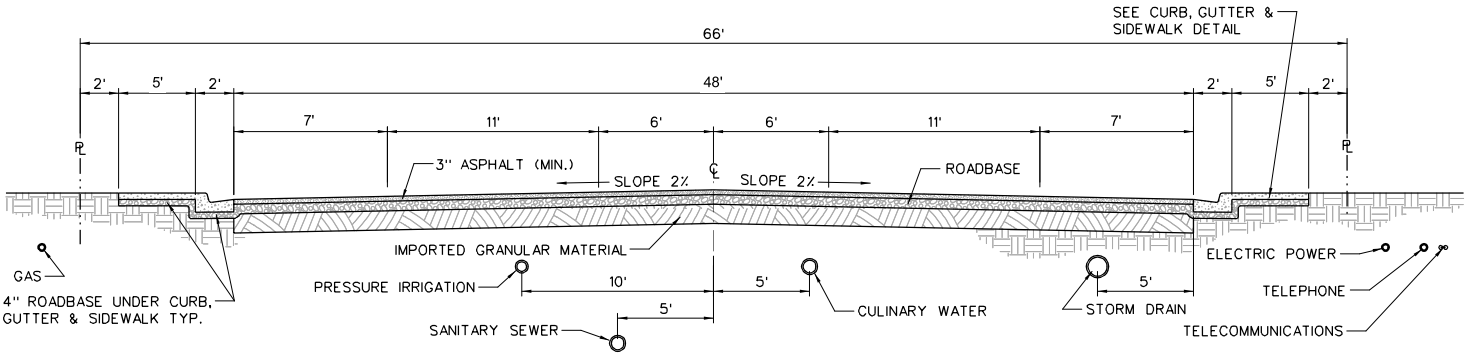

MINOR ARTERIAL, COLLECTOR & LOCAL COMMERCIAL
66' STREET CROSS-SECTION
LOOKING NORTH OR WEST

NOTES:

1. IMPORTED GRANULAR MATERIAL (SUB-BASE), ROADBASE, AND ASPHALT THICKNESSES SHALL BE DETERMINED BY PAVEMENT DESIGN.
2. DRINKING WATER PIPELINES SHALL BE INSTALLED ON THE NORTH AND EAST SIDE OF THE STREET, UNLESS APPROVED OTHERWISE BY THE CITY ENGINEER.
3. FIRE HYDRANTS SHALL BE LOCATED EVERY 400 FEET AND ON THE SAME SIDE OF THE STREET AS THE DRINKING WATER PIPELINES, UNLESS APPROVED OTHERWISE BY THE CITY ENGINEER.
4. WATER VALVES SHALL BE CLUSTERED AT THE FITTING ON THE MAIN, UNLESS APPROVED OTHERWISE BY THE CITY ENGINEER.
5. ALL DRINKING WATER MAIN PIPELINES SHALL BE 8-INCH MINIMUM.
6. ALL PRESSURE IRRIGATION MAIN PIPELINES SHALL BE 6-INCH MINIMUM, UNLESS APPROVED OTHERWISE BY THE CITY ENGINEER.
7. TELECOMMUNICATIONS CONDUIT SHALL BE LAID WHERE TELEPHONE CONDUIT IS LAID.
8. REQUIRED COVER OVER UTILITY LINES SHALL BE AS FOLLOWS:
   CULINARY WATER = 48" MINIMUM
   PRESSURE IRRIGATION = 24" MINIMUM
   SANITARY SEWER = PER DESIGN
   STORM DRAIN = PER DESIGN
   TELECOMMUNICATIONS = 24" MINIMUM
   ALL OTHERS = PER UTILITY REQUIREMENTS
9. SIDEWALK NOT REQUIRED IN INDUSTRIAL ZONES WEST OF GENEVA ROAD.

LINDON 100 NORTH STATE (801) 785-7687	STANDARD STREET CROSS SECTIONS AND UTILITY LOCATIONS	DRAWN: NDG DESIGN: NDG REVISION: ADOPTED: 07/07/2025	2a

Exhibit 4

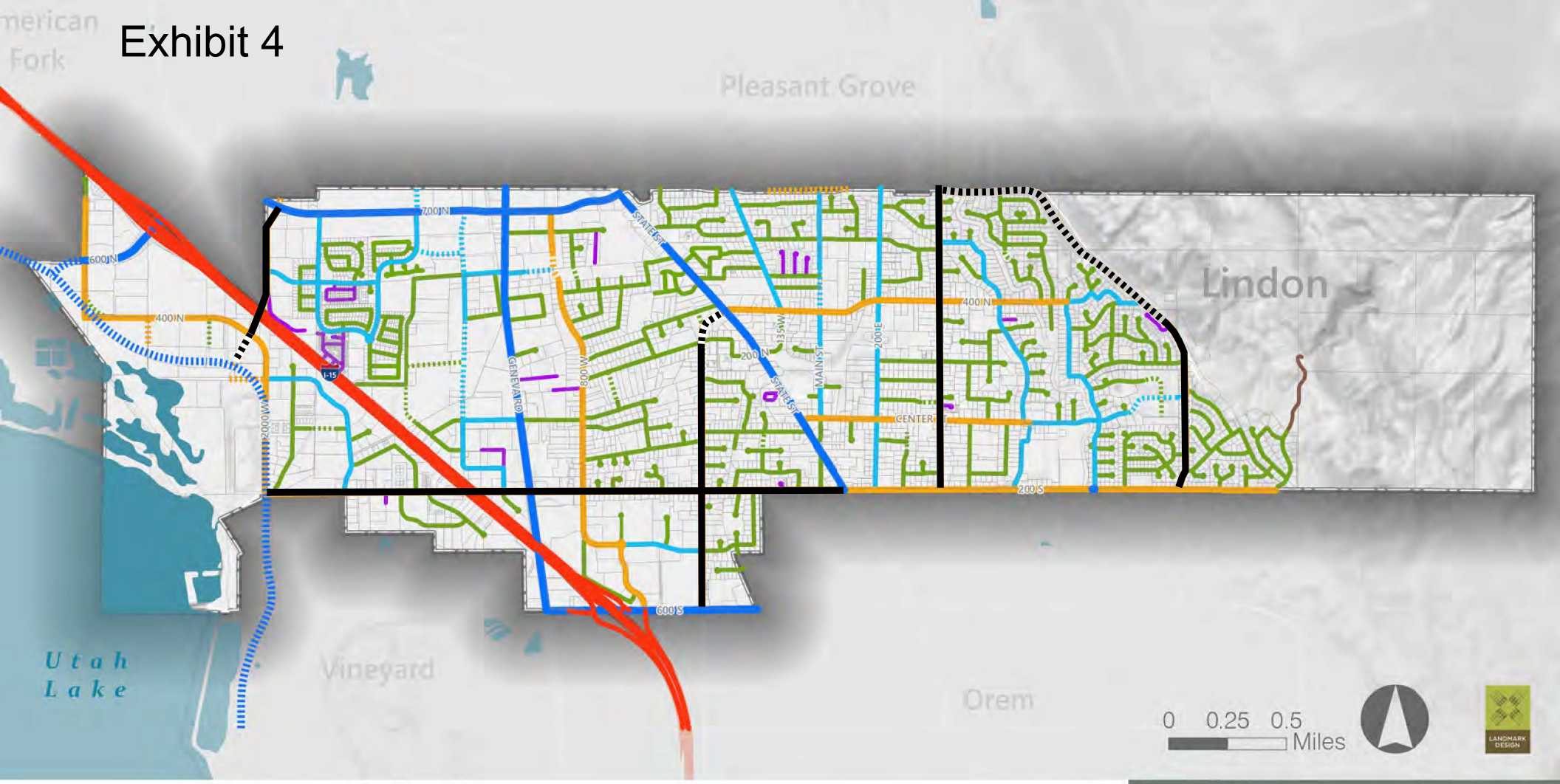

Functional Classification

- Freeway(UDOT)
- Major Arterial (UDOT)
- Future Major Arterial (UDOT)
- Major Collector
- Future Major Collector
- Minor Collector
- Future Minor Collector
- Local
- Future Local
- Other Public
- Private
- Lindon City Boundary
- Minor Arterial
- Future Minor Arterial

Map 6
Street Master Plan

ADOPTED JULY 3, 2023

Lindon City General Plan

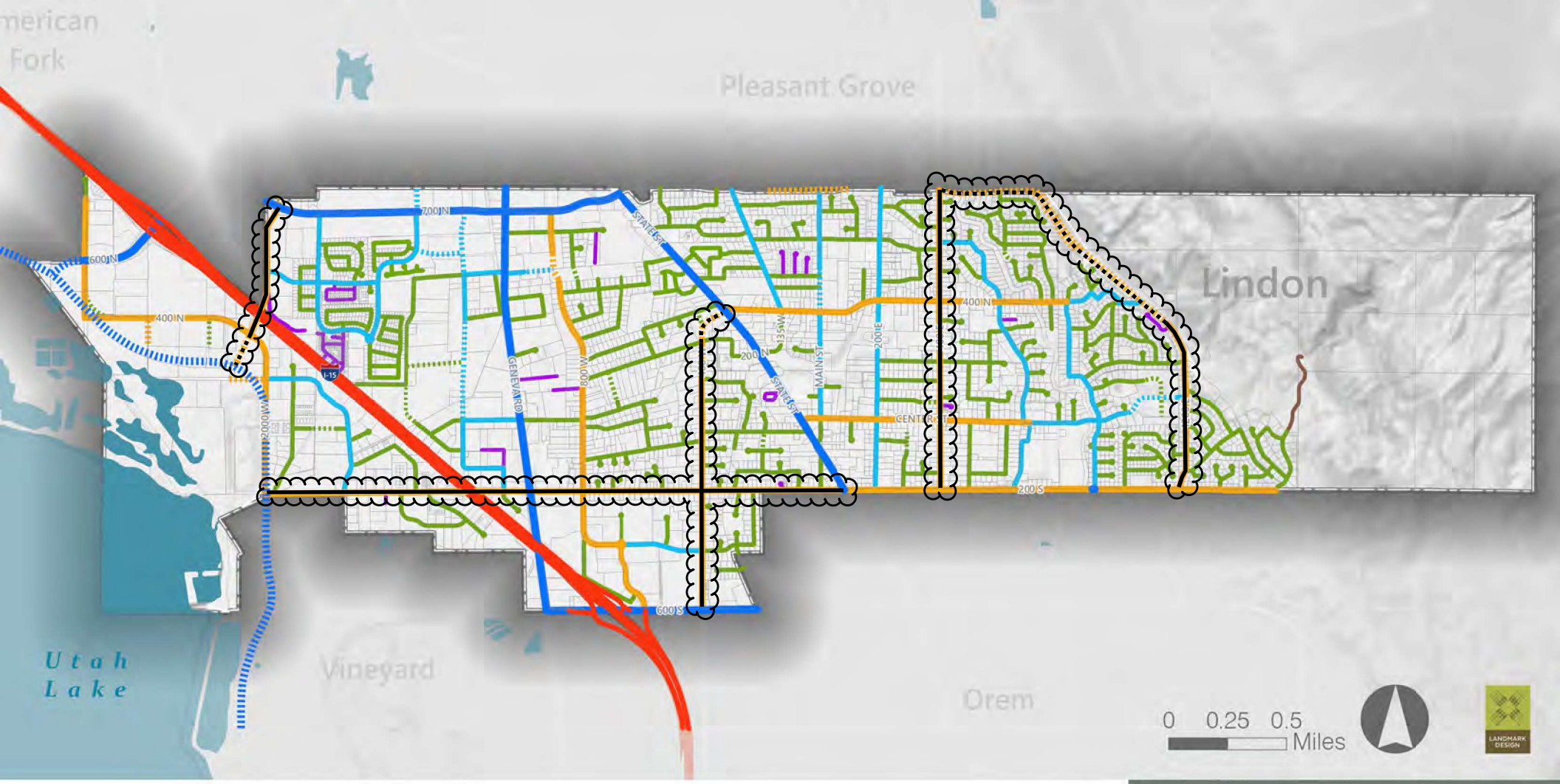

Functional Classification

- Freeway(UDOT)
- Major Arterial (UDOT)
- Future Major Arterial (UDOT)
- Major Collector
- Future Major Collector
- Minor Collector
- Future Minor Collector
- Local
- Future Local
- Other Public
- Private
- Lindon City Boundary
- Minor Arterial
- Future Minor Arterial

Map 6
Street Master Plan

ADOPTED JULY 3, 2023

Lindon City General Plan

Item 8 - Ordinance Amendment – Water Shares Title 17 and Land Development Policies, Standard Specifications and Drawings Manual

Date: August 25, 2026 **Applicant**: Lindon City **Presenting Staff**: Michael Florence **Type of Decision**: Legislative **Council Action Required**: Yes, the Planning Commission is the recommending body on this application.	MOTION I move to recommend to (approve, deny, continue) ordinance amendment 2026-15-O (as presented, or with changes).

Overview:

- Lindon City is proposing amendments to Lindon City Code Title 17 and the Lindon City Land Development Policies, Standard Specifications and Drawings Manual to revise the types and amounts of water shares/irrigation water stock accepted by the City for development, permitting, and connecting to the City's water system.
- The proposed amendments discontinue the acceptance of North Union Canal water shares and certain equivalent water shares and instead authorize the acceptance of Alpine District Full water shares and certain equivalent water shares.
- The proposed amendments to Title 17 also provide clarifying language for accepting water shares or a fee in lieu of shares to the city.

Staff Analysis:

North Union Canal was constructed in 1865 and for over 150 years provided irrigation water to residents of Lindon City and surrounding communities. Due to long-term maintenance and inefficient delivery of irrigation water, Lindon City made the decision to work with City water partners and transfer the delivery of irrigation water to the Provo River Aqueduct. With the change to deliver irrigation water through the Provo River Aqueduct, Lindon City needs to amend the type and amount of water shares that will be accepted by Lindon City for subdivision of property, land use applications, building permits, and property owners desiring to connect to the city secondary water system.

Previously Accepted Water Shares

Residential: 1 Share North Union
Industrial or Commercial: minimum ½ share North Union

Accepted equivalents of 1 share North Union

- 1.2 shares of Murdock/Provo Reservoir – Full
- ½ share Provo Bench Canal

Shares from the following water companies will only be accepted by the city for development in each company's respective service area as shown on the maps at the end of the Fee Schedule.

- 2 shares of Hollow Water Whole Stream
- 3 shares of Hollow Water Half Stream
- 2 shares of Cobbley Ditch

- 1.1 shares of Southfield & Spring Ditch

Proposed Accepted Water Shares

Residential: 1 Share Provo River Water Users Association (PRWUA) Alpine District Full

Industrial or Commercial: minimum ½ share Provo River Water Users Association (PRWUA) Alpine District Full

Accepted equivalents of 1 share Provo River Water Users Association (PRWUA) Alpine District Full

- 2 shares PRWUA Alpine District Late
- 1 share PRWUA Orem District Late share plus $12,000 per acre
- 9 shares PRWUA Alpine Contained
- 5 shares PRWUA Deer Creek Storage
- 3 shares Pleasant Grove Irrigation Company (PGIC)

Shares from the following water companies will only be accepted by the city for development in each company's respective service area as shown on the maps at the end of the Fee Schedule.

- 2 shares Hollow Water Whole Stream
- 3 shares Hollow Water Half Stream
- 2 shares Cobley Ditch
- 1 share Southfield & Spring Ditch

*Lindon City will continue to accept a fee in lieu of water shares. Lindon City charges 95% of the market rate, which is evaluated quarterly.

Exhibits

1. Draft Ordinance

ORDINANCE NO. 2026-15-O

AN ORDINANCE OF THE CITY COUNCIL OF LINDON CITY, UTAH COUNTY, UTAH, AMENDING LINDON CITY ORDINANCES 13.19.010, 17.32.250, 17.66.005, 17.66.010 AND CHAPTER 2 SECTION 1.07 OF THE LINDON CITY LAND DEVELOPMENT, POLICIES, STANDARD SPECIFICATIONS AND DRAWINGS AND PROVIDING FOR AN EFFECTIVE DATE.

WHEREAS, the Lindon City Council is authorized by state law to enact and amend ordinances establishing land use regulations; and

WHEREAS, the proposed amendments are consistent with the goal of the Lindon City General Plan to continue to plan for future growth and change; and

WHEREAS, the proposed amendment is consistent with the goal of the Lindon City General plan to conserve water resources and to protect and enhance the Lindon City irrigation water system for future needs; and

WHEREAS, the North Union Canal was constructed in 1865 and for over 150 years provided irrigation water to residents of Lindon City and surrounding communities; and

WHEREAS, due to long-term maintenance and inefficient delivery of irrigation water, Lindon City decided to work with City water partners and transfer the delivery of irrigation water to the Provo River Aqueduct; and

WHEREAS, with the change to deliver irrigation water through the Provo River Aqueduct, Lindon City needs to amend the type and amount of water shares that will be accepted by Lindon City for subdivision of property, land use applications, building permits, and property owners desiring to connect to the city secondary water system; and

WHEREAS, the Lindon City Council finds that it is necessary to amend the Lindon City ordinances and Land Development, Policies, Standard Specifications and Drawings as referenced in this ordinance; and

WHEREAS, on August 25, 2026, the Planning Commission held a properly noticed public hearing to hear testimony regarding the ordinance amendment; and

WHEREAS, after the public hearing, the Planning Commission further considered the proposed ordinance amendment and recommended that the City Council adopt the attached ordinance; and

WHEREAS, the Council held a public meeting on _____, 2026, to consider the recommendation and the Council received and considered all public comments that were made therein.

NOW, THEREFORE, BE IT ORDAINED by the City Council of the City of Lindon, Utah County, State of Utah, as follows:

SECTION I: Amend Lindon City Code Sections 13.19.010, 17.32.250, 17.66.005, 17.66.010 as follows:

13.19.010 Connection Fee.
The Connection Fee is satisfied by submitting and transferring ownership of the appropriate type and amount of water shares or paying a fee in lieu of water shares to Lindon City, as listed in the Lindon City Fee Schedule.

17.32.250 Water – Subdivider Obligation to Provide Sufficient Quantity.
The procurement of water shall be the responsibility of the subdivider; and water shall be provided for the exclusive use of Lindon City according to Chapter 17.66. In residential zones one (1) share of ~~North Union~~ Provo River Water Users Association (PRWUA) Alpine District Full Water or its equivalent per net acre shall be submitted and rounded to the nearest one-tenth (1/10) share per acre and in nonresidential zone one-half (1/2) share of ~~North Union~~ PRWUA Alpine District Full water or its equivalent per net acre shall be submitted (rounded to the nearest one-tenth (1/10) share per acre). Water shares other than ~~North Union~~ PRWUA Alpine District Full shall be accepted as per the Lindon City fee schedule and Chapter 17.66.

17.66.005 Purpose.
The purpose of this ordinance is to require the submittal of water stock (water shares) so that Lindon City can provide and ensure an adequate public water supply (both culinary and secondary water while maintaining and developing adequate distribution of systems to serve the needs of the City for present and future generations. Water submittal requirements described in this ordinance are consistent with goals and guidelines found in the ~~Public Facilities~~ Water Use and Preservation Element of the Lindon City general plan. At the direction of the City Council, implementation of this ordinance and acceptance of water stock may be handled administratively.

17.66.010 Transfer of Water.
No subdivision of land, pending land use application, or building permit shall be approved or issued, where such subdivision or permit is for residential, commercial, or industrial use where the supply of water is to be from the City water system, unless and until the subdivider shall first deliver to the City irrigation water stock as listed in the Lindon City Fee Schedule and further described in Section 17.32.250.

Applicants desiring building permits for parcels that have existing culinary water service that has previously served a residential, commercial, industrial building shall not be required to turn in water share for the property unless connection to the pressure irrigation system is desired. If connection to the pressure irrigation system is desired then water shares, or the fee in lieu of shares, shall be submitted to the City. Vacant parcels with culinary water service connections that have not been utilized for previous residential, commercial or industrial structures shall be required to turn in water shares at the time a building permit is issued for the property.

The City Council shall have the authority to require the transfer of more water than required herein when a proposed land use will have a water-intensive use which proposes to consume large quantities of water uncharacteristic of the area. Said water stock shall be held ~~in trust~~ by Lindon City for present and future water demands. Lindon City may use the water for any purpose in any area of the City which it deems appropriate so long as water from other sources is made available to the land so subdivided or developed. Upon delivery of the water stock provided for above, the subdivider, land use applicant, property owner, or building permit applicant, as the case may be, shall have no further interest of any kind or nature in and to said water stock.

~~In the event the~~ In lieu of conveying the required water shares to the city, an ~~subdivider~~ applicant with a pending land use application, ~~or~~ building permit application, or a property owner ~~permit applicant is unable to obtain the requisite water stock for transfer to Lindon City and demonstrates said inability to obtain said water stock to the satisfaction of Lindon City, the subdivider shall~~ may ~~then be allowed by Lindon City~~ elect to pay ~~to~~ the City ~~in cash the equivalent cost~~ a fee in an amount determined by the City from time to time. The fee shall be equal to ninety-five percent (95%) of the average equivalent market value of the water shares ~~of said water stock required to be delivered to the City, as set forth above~~ otherwise required to be conveyed to the City under this Section. ~~This money shall be placed by~~ Funds received by the City in lieu of water shares shall be used by Lindon City ~~in a fund to develop water within the City limits of Lindon City~~ for purposes associated with supplying water to the City and/or operating, maintaining, or replacing the water systems of the City.

SECTION II: Amend the Lindon City Land Development, Policies, Standard Specifications and Drawings Chapter 2 Section 1.07 as follows:

SECTION 1.07 DEDICATION AND FEE IN LIEU OF WATER SHARES

Dedication and fee in lieu of water shares ~~is~~ are described in Lindon City Code Sections 17.32.~~270~~ 250 and 17.66.010. Water share types and amounts, and equivalents accepted by Lindon City, are found in the Lindon City Fee Schedule.

SECTION III: The provisions of this ordinance and the provisions adopted or incorporated by reference are severable. If any provision of this ordinance is found to be invalid, unlawful, or unconstitutional by a court of competent jurisdiction, the balance of the ordinance shall nevertheless be unaffected and continue in full force and effect.

SECTION IV: Provisions of other ordinances in conflict with this ordinance and the provisions adopted or incorporated by reference are hereby repealed or amended as provided herein.

SECTION V: This ordinance shall take effect immediately upon its passage and posting as provided by law.

PASSED and ADOPTED and made EFFECTIVE by the City Council of Lindon City, Utah, this _____day of _____, 2026.

_____
Carolyn O. Lundberg, Mayor

ATTEST:

_____
Britni Laidler,
Lindon City Recorder

SEAL