Cedar City

10 North Main Street • Cedar City, UT 84720
435-586-2950 • FAX 435-586-4362
www.cedarcityut.gov

CITY COUNCIL WORK MEETING
MAY 20, 2026
5:30 P.M.

The City Council meeting will be held in the Council Chambers at the City Office, 10 North Main Street. The City Council Chambers may be an anchor location for participation by electronic means. The agenda will consist of the following items:

I. Call to Order

II. Agenda Order Approval

III. Administration Agenda
- Mayor and Council Business
- Staff Comments
  - Swear in Amber Ray as City Recorder
  - Update on the Torus Energy agreement. Paul Bittmenn

IV. Business Agenda

Public

1. Public hearing to consider waving a water bill late fee. Debbie Forsyth/Rhean Carlson
2. Consider a franchise agreement with Forged Fiber 37 LLC. Garrett Marshall/Randall McUne
3. Donation Advertisement on City Equipment. Cedar City Fireman Relief Association. Erick Cox/LaNor Warby
4. Public hearing to consider an ordinance modifying City Ordinance 26-V-18 regarding driveway requirements. Perasic/Radiant Blue Construction/Kent Fugal
5. Public hearing to consider an ordinance modifying Engineering Standards Section 5 regarding driveway requirements. Kent Fugal
6. Consider approving an Ordinance for a Residential Development Overly (RDO) and Development Agreement for the Cross Hollow RDO located in the vicinity of Cody Drive and Cross Hollow Road. Go Civil/Randall McUne

V. Staff

7. Consider blanket contracts for FY 2027. Eric Witzke
8. Consider declaring the old Cedar Canyon water tank as surplus property. Matt Baker
9. Consider a resolution to amend the Consolidated Fee Schedule. Lester Ross
10. Consider bids for the Fiddlers Park Project. Bill Maxwell
11. Consider Bids for the 600 S/1100 W Traffic Signal Project. Shane Johnson
12. Consider proposals for engineering design of the Cedar Canyon Springs Filtration Treatment Plant Project. Jonathan Stathis
13. Consider awarding engineering contract for AIP 055. Tyler Galetka
14. Consider Fire Department Policy Manual changes regarding comp time. Mike Phillips
15. Consider an amendment to City Ordinance 35-10(B) to establish No Parking zones in the vicinity of 200 North and 100 East. Kent Fugal/Randall McUne
16. Consider releasing Keith Naylor and appointing David Westwood to the Board of Adjustments and consider the appointment of Donna Christensen to the Cross Hollow Arena Committee. Mayor Nelson
17. Consider improvements of chip seal and striping to city owned vacant lot at 270 N 100 E. Phil Schmidt

Dated this 18th day of May 2026.

Renon Savage

Renon Savage
City Recorder

CERTIFICATE OF DELIVERY:

The undersigned duly appointed and acting recorder for the municipality of Cedar City, Utah, hereby certifies that a copy of the foregoing Notice of Agenda was delivered to the Daily News, and each member of the governing body this 18th day of May 2026.

Renon Savage

Renon Savage
City Recorder

Cedar City Corporation does not discriminate on the basis of race, color, national origin, sex, religion, age or disability in employment or the provision of services.

If you are planning to attend this public meeting and, due to a disability, need assistance in accessing, understanding or participating in the meeting, please notify the city not later than the day before the meeting and we will try to provide whatever assistance may be required.

#1

ASSET MANAGEMENT REAL ESTATE, LLC
365 WEST 200 NORTH
CEDAR CITY, UT 84720
(435) 586-7133

May 8, 2026

Dear Mayor & Council,

I am writing to respectfully request that the late fee assessed on the Country Meadows HOA water account in the amount of $108.78 be removed.

My office processes multiple HOA payments at the same time each month, and all checks are placed in an envelope in alphabetical order prior to depositing into the payment box. Unfortunately, it appears that one payment was misplaced or lost in transit and was therefore not posted to the account on time. As soon as I became aware of the issue, I took immediate steps to address the missing payment.

This was an isolated incident and not a result of intentional nonpayment or neglect. I value my relationship with the City and have consistently worked to keep all accounts current and in good standing.

Given the circumstances, I kindly ask for consideration in waiving the late fee associated with this occurrence. Your understanding and assistance would be greatly appreciated.

Thank you for your time and consideration. Please let me know if any additional information is needed.

Sincerely,

Debbie M Forsyth

Debbie M. Forsyth
Broker/Owner
Asset Management Real Estate

Cedar City

10 North Main Street • Cedar City, UT 84720
435-586-2950 • FAX 435-586-4362
to www.cedarcityut.gov

May 12, 2026

Mayor & Council Members,

Regarding: ASSET MANAGEMENT'S REQUEST FOR WAIVING LATE FEES

Debbie Forsyth from Asset Management contacted our utility department on May 7, indicating she was working on paying the utility bills. She observed there was a prior balance on a particular account #25.11890.0 for Country Quality Development (Country Meadows HOA).

Natalie (our utility clerk) and Kaylie (our cash receipting clerk) did an extensive search through the checks that were received that day to try and locate the check and stub. Every other check that was sent from Asset Management was received and applied to the respective accounts. (I have attached the email thread between Natalie Cooley, our utilities clerk, and Debbie Forsyth.)

Kaylie remembers retrieving the envelopes from the drop box on April 21, 2026 and does remember the Asset Management envelopes. Her method for processing the checks and stubs was as follows:

- #15053 was for 71 accounts. When a check is received for multiple accounts, she will verify that the stubs match the amount on the check.
- Check numbers 252, 640, 249, 460, 265, 1194, 1005, 837, 181, 1656, 632, 1466, 2372, 1927, and 5408 all had one check for one stub.
- Check #419 was for two stubs
- Check #1883 was for three stubs.

There were no other checks or stubs inside this envelope.

To further explain the overall process:

- The envelope is opened and the check goes in one pile and the corresponding stub(s) in an adjacent pile.
- If a check includes multiple stubs, the stub totals are added to confirm they match the check amount.
- We create adding machine tapes for both the checks and the stubs, keeping them in the same order they were removed from the envelopes so amounts can be verified if needed.
- The tapes are compared to make sure the totals match. Kaylie then gives the stubs to Natalie who inputs them into the system, applying them to the various accounts.

I am confident in our process and the individuals who perform these tasks.

Rhean Carlson

Rhean Carlson
Treasurer

CEDAR CITY CORPORATION

25.11890.0, COUNTRY QUALITY DEV INC, 1475 N NORTHFIELD RD (52)

Page 1

Date	Type	Ref		Service	Qty Billed	Description	Amount	Balance
12/23/25	Pmt	899		*	-	Online Payment	2,246.60-	0.00
12/31/25	Billing	10214		WATER*	160.00	Import Readings	194.00	194.00
12/31/25	Billing	17908		STORM	34.60	Automatic Billing	214.60	408.60
12/31/25	Billing	17908		SEWER	52.00	Automatic Billing	1,196.00	1604.60
12/31/25	Billing	17908		GARB	53.00	Automatic Billing	424.00	2028.60
12/31/25	Billing	17908		LFILL	53.00	Automatic Billing	212.00	2240.60
1/20/26	Billing	4		WATER	50.00	Meter Removal	67.00	2307.60
1/23/26	Pmt	897	Brian Wr	*	-	Online Payment	(2,240.60)	67.00
1/31/26	Billing	10351		WATER	27.00	Import Readings	44.00	111.00
1/31/26	Billing	17971		STORM	34.60	Automatic Billing	214.60	325.60
1/31/26	Billing	17971		SEWER	52.00	Automatic Billing	1,196.00	1521.60
1/31/26	Billing	17971		GARB	53.00	Automatic Billing	424.00	1945.60
1/31/26	Billing	17971		LFILL	53.00	Automatic Billing	212.00	2157.60
2/23/26	Pmt	2097	#2557	*	-	PAYMENT ON ACCOUNT	(2,157.60)	0.00
2/28/26	Billing	6525		WATER	66.00	Import Readings	83.00	83.00
2/28/26	Billing	18106		STORM	34.60	Automatic Billing	214.60	297.60
2/28/26	Billing	18106		SEWER	52.00	Automatic Billing	1,196.00	1493.60
2/28/26	Billing	18106		GARB	53.00	Automatic Billing	424.00	1917.60
2/28/26	Billing	18106		LFILL	53.00	Automatic Billing	212.00	2129.60
3/16/26	Pmt	158	#2562	*	-	PAYMENT ON ACCOUNT	(2,129.60)	0.00
3/31/26	Billing	6562		WATER	112.00	Import Readings	129.00	129.00
3/31/26	Billing	17894		STORM	34.60	Automatic Billing	214.60	343.60
3/31/26	Billing	17894		SEWER	52.00	Automatic Billing	1,196.00	1539.60
3/31/26	Billing	17894		GARB	53.00	Automatic Billing	424.00	1963.60
3/31/26	Billing	17894		LFILL	53.00	Automatic Billing	212.00	2175.60
4/30/26	Billing	6585		WATER	249.00	Import Readings	266.00	2441.60
4/30/26	Billing	11161		PNLTY	-	Penalty Billing	108.78	2550.38
4/30/26	Billing	17856		STORM	34.60	Automatic Billing	214.60	2764.98
4/30/26	Billing	17856		SEWER	52.00	Automatic Billing	1,196.00	3960.98
4/30/26	Billing	17856		GARB	53.00	Automatic Billing	424.00	4384.98
4/30/26	Billing	17856		LFILL	53.00	Automatic Billing	212.00	4596.98
5/31/26	Billing	6596		WATER	258.00	Import Readings	275.00	4871.98

Summarize options: Adjustment, Billings, Interest, Payments

From: Debbie Forsyth <dforsyth@assetmre.com>
Sent: Thursday, May 7, 2026 12:56 PM
To: Natalie Cooley <cnatalie@cedarcityut.gov>
Subject: [EXTERNAL]: Country Meadows

Hey Natalie
Just me again. I just went to pay the bill for Country Meadows (Account # 25.11890.0) and it shows that there was a prior balance in the amount of our last billing. I paid that bill with check #2567 with all of the other bills last month. I also just checked my bank account and that check has not cleared but all of the others around it have. Can you look into this for me? Thanks.

DEBBIE FORSYTH | OWNER, BROKER & REALTOR
PHONE: (435) 586-7133 | FAX: 435-586-2367
WWW.ASSETMRE.COM
365 WEST 200 NORTH, CEDAR CITY UT 84720
ASSET MANAGEMENT REAL ESTATE

On 5/7/2026 1:18 PM, Natalie Cooley wrote:
Did you put it in the drop box with all your other payments? Do you remember what day it would have been? We just looked through the month of April and we don't see a check in our system with that number.

Natalie Cooley
Utility Billing Clerk
Cedar City Corporation
10 N. Main Street
Cedar City, UT 84720
435-586-2951

From: Debbie Forsyth <dforsyth@assetmre.com>
Sent: Thursday, May 7, 2026 2:07 PM
To: Natalie Cooley <cnatalie@cedarcityut.gov>
Subject: Re: [EXTERNAL]: Country Meadows

I put all of the HOA's in one envelope and all of the rentals in another envelope. That is the only one that seems to be missing???

DEBBIE FORSYTH | OWNER, BROKER & REALTOR
PHONE: (435) 586-7133 | FAX: 435-586-2367
WWW.ASSETMRE.COM
365 WEST 200 NORTH, CEDAR CITY UT 84720
ASSET MANAGEMENT REAL ESTATE

On 5/7/2026 2:08 PM, Natalie Cooley wrote:
Ya that's weird and if it hasn't cleared then it doesn't sound like we received it.

Natalie Cooley
Utility Billing Clerk
Cedar City Corporation
10 N. Main Street
Cedar City, UT 84720
435-586-2951

From: Debbie Forsyth <dforsyth@assetmre.com>
Sent: Thursday, May 7, 2026 2:10 PM
To: Natalie Cooley <cnatalie@cedarcityut.gov>
Subject: Re: [EXTERNAL]: Country Meadows

All of the checks are in the same envelope when I drop them in the slot. I drop two envelopes off at the same time. I don't understand how it is missed.

DEBBIE FORSYTH | OWNER, BROKER & REALTOR
PHONE: (435) 586-7133 | FAX: 435-586-2367
WWW.ASSETMRE.COM
365 WEST 200 NORTH, CEDAR CITY UT 84720
ASSET MANAGEMENT REAL ESTATE

On 5/7/2026 2:20 PM, Natalie Cooley wrote:
I wonder if it didn't make it in the envelope. I'm not really sure. I'm sorry.

Natalie Cooley
Utility Billing Clerk
Cedar City Corporation
10 N. Main Street
Cedar City, UT 84720
435-586-2951

From: Debbie Forsyth <dforsyth@assetmre.com>
Sent: Thursday, May 7, 2026 2:24 PM
To: Natalie Cooley <cnatalie@cedarcityut.gov>
Subject: Re: [EXTERNAL]: Country Meadows

I put all of the checks into the envelope as I'm writing them for each. It was in there. I don't mind bringing in the check for last and this month today but I don't feel that the penalty should be assessed.

DEBBIE FORSYTH | OWNER, BROKER & REALTOR
PHONE: (435) 586-7133 | FAX: 435-586-2367
WWW.ASSETMRE.COM
365 WEST 200 NORTH, CEDAR CITY UT 84720
ASSET MANAGEMENT REAL ESTATE

On 5/7/2026 2:35 PM, Natalie Cooley wrote:
Do you remember what day you dropped the checks off and we can look in our records again?

Natalie Cooley
Utility Billing Clerk
Cedar City Corporation
10 N. Main Street
Cedar City, UT 84720
435-586-2951

From: Debbie Forsyth <dforsyth@assetmre.com>
Sent: Thursday, May 7, 2026 2:36 PM
To: Natalie Cooley <cnatalie@cedarcityut.gov>
Subject: Re: [EXTERNAL]: Country Meadows

It would be the same day as all of the others were posted.

DEBBIE FORSYTH | OWNER, BROKER & REALTOR
PHONE: (435) 586-7133 | FAX: 435-586-2367
WWW.ASSETMRE.COM
365 WEST 200 NORTH, CEDAR CITY UT 84720
ASSET MANAGEMENT REAL ESTATE

On 5/7/2026 2:36 PM, Natalie Cooley wrote:
What is another account we can look up and see the date?

Natalie Cooley
Utility Billing Clerk
Cedar City Corporation
10 N. Main Street
Cedar City, UT 84720
435-586-2951

From: Debbie Forsyth <dforsyth@assetmre.com>
Sent: Thursday, May 7, 2026 2:38 PM
To: Natalie Cooley <cnatalie@cedarcityut.gov>
Subject: Re: [EXTERNAL]: Country Meadows

I'm doing Eastgate right now. It is 3.09850.0

DEBBIE FORSYTH | OWNER, BROKER & REALTOR
PHONE: (435) 586-7133 | FAX: 435-586-2367
WWW.ASSETMRE.COM
365 WEST 200 NORTH, CEDAR CITY UT 84720
ASSET MANAGEMENT REAL ESTATE

On 5/7/2026 2:41 PM, Natalie Cooley wrote:
We found the stack with those checks for that date but there isn't a check for $2175.60 ck #2567.

Natalie Cooley
Utility Billing Clerk
Cedar City Corporation
10 N. Main Street
Cedar City, UT 84720
435-586-2951

From: Debbie Forsyth <dforsyth@assetmre.com>
Sent: Thursday, May 7, 2026 2:45 PM
To: Natalie Cooley <cnatalie@cedarcityut.gov>
Subject: Re: [EXTERNAL]: Country Meadows

Then I'm dumbfounded because it was in there. I process the checks in alphabetical order and start with one HOA and then move through them one at a time. I didn't just write the check, process in the system and then not put in the envelope. That doesn't make any sense.

DEBBIE FORSYTH | OWNER, BROKER & REALTOR
PHONE: (435) 586-7133 | FAX: 435-586-2367
WWW.ASSETMRE.COM
365 WEST 200 NORTH, CEDAR CITY UT 84720
ASSET MANAGEMENT REAL ESTATE

On 5/7/2026 2:46 PM, Natalie Cooley wrote:
Ya we aren't really sure either, it doesn't make sense but we don't have it.

Natalie Cooley
Utility Billing Clerk
Cedar City Corporation
10 N. Main Street
Cedar City, UT 84720
435-586-2951

From: Debbie Forsyth <dforsyth@assetmre.com>
Sent: Thursday, May 7, 2026 2:49 PM
To: Natalie Cooley <cnatalie@cedarcityut.gov>
Subject: Re: [EXTERNAL]: Country Meadows

So my only option is to go before all of city council to request the penalty be waived? Like I said I can bring in the check today. There are ample funds in the account. I wouldn't have just wrote out the check and not put in the envelope. It's truly a mystery to me.

DEBBIE FORSYTH | OWNER, BROKER & REALTOR
PHONE: (435) 586-7133 | FAX: 435-586-2367
WWW.ASSETMRE.COM
365 WEST 200 NORTH, CEDAR CITY UT 84720
ASSET MANAGEMENT REAL ESTATE

On 5/7/2026 2:52 PM, Natalie Cooley wrote:
Yes, you would have to go to council. We can definitely process the payment today if you bring in the check. I understand your frustration but we just don't show any record of it. I'm sorry.

Natalie Cooley
Utility Billing Clerk
Cedar City Corporation
10 N. Main Street
Cedar City, UT 84720
435-586-2951

From: Debbie Forsyth <dforsyth@assetmre.com>
Sent: Thursday, May 7, 2026 3:12 PM
To: Natalie Cooley <cnatalie@cedarcityut.gov>
Subject: Re: [EXTERNAL]: Country Meadows

How do I get on the agenda and when do they meet?

DEBBIE FORSYTH | OWNER, BROKER & REALTOR
PHONE: (435) 586-7133 | FAX: 435-586-2367
WWW.ASSETMRE.COM
365 WEST 200 NORTH, CEDAR CITY UT 84720
ASSET MANAGEMENT REAL ESTATE

CEDAR CITY COUNCIL
AGENDA ITEMS - 2
DECISION PAPER

TO: Mayor and City Council

FROM: Randall McUne

DATE: May 4, 2026

SUBJECT: Forged Fiber 37 LLC Franchise Agreement

DISCUSSION:

This item was on the agenda for the last work meeting, but there were questions staff didn't know the answers to, and no one from Forged Fiber 37 LLC appeared. Staff have been able to obtain more answers, and Forged Fiber apologized for not appearing, noting that some cities ask them to appear and some do not.

Of most importance for our discussion, Forged Fiber is handling the fiber optic systems for AT&T in its relatively recent purchase of Lumen's (formerly CenturyLink) mass market fiber business. While Lumen kept some of its fiber network, Forged Fiber will take over the fiber to individual customers throughout Cedar City, meaning this is not a new competitor but the replacement of one competitor with another.

The terms of the Franchise Agreement remain the same, and I'll repeat the basic terms here. This is a non-exclusive franchise agreement. Some of the highlights of the agreement are as follows:

- Forged Fiber will pay the City's municipal telecommunication license tax at the rate of 3.5% (rate set by State law).
- Forged Fiber intends on building a network to provide telecommunication services to customers within the City.
- The agreement is for 10 years with a renewal option of another 10 years.
- Forged Fiber has to work with the City to obtain a permit before cutting into the City's right-of-way. They must also repair and restore any right-of-way to City standards. Repairs must be guaranteed for 18 months.
- Any Forged Fiber equipment must be located in a manner to minimize interference with streets, alleys, and rights-of-way.

Please consider whether to enter this franchise agreement with Forged Fiber 37 LLC.

FIBER-OPTIC TELECOMMUNICATIONS FRANCHISE AGREEMENT BETWEEN THE CITY OF CEDAR CITY, UTAH AND FORGED FIBER 37 LLC

THIS TELECOMMUNICATIONS FRANCHISE AGREEMENT (this "Agreement") is entered into this _____ day of _____, 2026 (the "Effective Date") by and between the City of Cedar City, a municipal corporation and political subdivision of the State of Utah, with principal offices at 10 North Main Street, Cedar City, Utah, 84721 (the "City") and Forged Fiber 37 LLC, a telecommunications corporation with its principle offices at _____ _____ (the "Provider"). The CITY and the PROVIDER may sometimes be referred to herein collectively as the "Parties".

RECITALS

WHEREAS, the Provider desires to provide telecommunications services within the City and, in connection therewith, to establish a telecommunications network in, under, along, over and across present and future rights-of-way of the City which consists of telecommunication lines, cables, and all other necessary appurtenances (the "System"); and

WHEREAS, after extensive consideration, the City, in exercising its management of public rights-of-way, has determined that it is in the best interest of the public to provide the Provider a non-exclusive franchise agreement to operate a telecommunications network within the City; and

WHEREAS, the City and the Provider have negotiated an arrangement whereby the Provider may provide its services within the City pursuant to the terms and conditions outlined in the Agreement and all applicable City ordinances, and subject to the further reasonable regulation under the City's police and other regulatory power.

AGREEMENT

NOW, THEREFORE, in consideration of the mutual covenants and agreements of the Parties contained herein, and for other good and valuable consideration, the receipt and legal sufficiency of which is hereby acknowledged, the City and the Provider hereby agree as follows:

ARTICLE I
FRANCHISE AGREEMENT

1.1 Agreement. Upon approval by the City Council and execution by both Parties, this Agreement shall be deemed to constitute a binding contract by and between the City and the Provider.

1.2 Grant of Franchise. The City, through this Agreement, hereby grants to the Provider the non-exclusive right, privilege, and franchise to install, repair, maintain, remove and replace its telecommunications system on, in, under, over and across the present and future public rights-of-way in the City in order to provide services.

1.3 Licenses. The Provider hereby acknowledges that it has, or will, obtained any and all necessary approvals, licenses or permits required by federal, state and local law to provide telecommunication services consistent with the provisions of this Agreement.

1.4 Financial Capability. The Provider hereby warrants that it has the financial capability to construct, maintain, and operate a telecommunications network and to otherwise comply with the provisions of this Agreement.

1.5 Relationship of Parties. Nothing herein shall be deemed to create a joint venture or principal-agent relationship between the Parties, and neither Party is authorized to nor shall either Party act toward third persons or the public in a manner that would indicate any such relationship.

1.6 Pole Attachments. This franchise does not grant to the Provider the right to use City poles, conduit, or other facilities. The use of such facilities shall be governed by separate agreement.

ARTICLE II
FRANCHISE FEE

2.1 Franchise Fee.

a. This agreement is subject to the Utah Municipal Telecommunications License Tax Act Title 10, Chapter 1, Sections 401 through 410, Utah Code Annotated, 1953 as amended, enrolled at the time this agreement is signed or as may be amended. Provider shall pay the City's municipal telecommunications license tax at the rate of **3.5%** of the gross receipts from

telecommunications service attributed to the municipality. Said tax shall be paid through the Utah State Tax Commission.

b. All payments shall be made to the Utah State Tax Commission, whose current address is as follows:

Utah State Tax Commission
210 North 1950 West
Salt Lake City, Utah 84134

c. Payments are due to the Utah State Tax Commission within forty-five (45) days after receipt by the Provider. Interest shall accrue on late payments at the rate of **1 ½%** per month until paid. Compliance by the Provider with the terms and provisions of the Municipal Telecommunications Tax Act, and any rules and regulations promulgated thereunder, shall satisfy all requirements of this Agreement with respect to the calculation and payment of the Franchise Fee.

d. The City and the Provider hereby agree to negotiate in good faith any amendments to this Agreement as shall be necessary to accommodate changes in the Franchise Fee including payment provisions; provided, however, such new or changed provisions shall substantially confirm with the provisions contained in any permits held by other similarly situated companies.

e. City shall have access to any and all of Provider's business records upon reasonable notice for the purpose of auditing compliance with the above tax provisions.

f. The Provider hereby represents to the City that one of the purposes for entering into this Agreement is to obtain authority to build a network within the City to provide telecommunication services to customers within the City.

2.2 Equal Treatment. The City hereby agrees that if any service forming part of the base for calculating the Franchise Fee under this Agreement is, or becomes, subject to competition from a third party, the City will either impose and collect from any such third party a fee or tax on gross revenues from such competing service in the same percentage identified herein, plus the percentage specified as a utility revenue tax or license fee in the then-current ordinances of the City, or to waive collection of the fee(s) provided for herein that are subject to such competition.

ARTICLE III
TERM AND RENEWAL

3.1 Term and Renewal. The franchise granted to the Provider herein shall be for a period of ten (10) years commencing on the Effective Date first set forth above in this Agreement unless this Agreement is terminated sooner as provided herein. At the end of the initial ten (10) year term of this Agreement, the franchise granted herein may be renewed by the City and the Provider upon the same terms and conditions as contained in this Agreement for an additional ten (10) year term, by the Provider providing to the City's representative designated herein written notice of the Provider' s intent to renew not less than ninety (90) calendar days before the expiration of the initial franchise term.

3.2 Rights of Provider upon Expiration or Revocation. Upon expiration of this Agreement, whether by lapse of time, by agreement between the Parties, or by revocation or forfeiture, the Provider shall have the right to remove from the City' s rights-of-way any and all of its system; however, in such an event, it shall be the duty of the Provider, immediately upon such removal, to restore the rights-of-way for which such system is removed to as good a condition as the same was before the removal was affected.

3.3 Rights of City upon Expiration or Revocation. Upon expiration of the term of this Agreement, forfeiture, or lawful revocation of this Agreement, and if no renewal or extension thereof is agreed upon, the Provider may, at the discretion of the City Council, be required, in part or entirely, to remove all its wires, poles, fixtures, and other facilities or equipment installed or used in the enjoyment of the franchise. Alternatively, the removal or sale of such facilities and equipment may be directed, limited, or conditioned by the City by agreement between the Parties or through means of other lawful municipal power or right. The City may continue to invoke any or all provisions of this franchise Agreement against the Provider or any successor entity enjoying de facto franchise privileges after expiration or revocation. The City and the Provider shall work together to take all other actions deemed by the City as necessary and proper to accommodate the transition to any successor as may be in the best interest of the City or its inhabitants and the Provider.

ARTICLE IV
USE AND RELOCATION OF FACILITIES IN THE PUBLIC RIGHTS-OF-WAY

4.1 Franchise Rights to Use the Public Rights-of-Way. The Provider shall have the right to use the public rights-of-way within the City to construct and maintain its network subject to the conditions set forth in this Agreement; provided, however, that the Provider shall not, pursuant to this Agreement, place any new poles, mains, cables, structures, pipes, conduits, or

wires on, in, under, along, over, across or within any right-of-way, City park, pleasure ground, or other recreational area currently existing or developed in the future without a permit from the City. Nothing contained herein shall preclude the City from granting a revocable permit for such purpose. In addition, the Provider shall have the right to utilize any easements across private property granted to the City for utility purposes; provided, however, that the Provider obtain the City' s prior written permission in each case and the documents granting any such easements to the City to authorize such use. The Provider specifically understands and acknowledges that certain City easements and rights-of-way may be prescriptive in nature, and that nothing in this Agreement extends permission to use the easement or right-of-way beyond the extent that the City may have acquired, and such easements and rights-of-way may be subject to third party prior or after-acquired interests. The Provider is cautioned to examine each individual easement and right-of-way and the legal arrangement between the City and adjacent property owners. The City assumes no duty or obligation to defend any interest in any easement or right of-way, and the Provider remains solely responsible to make any arrangements required as a result of other persons claiming an interest in the City easement or right-of-way.

4.2 Provider Duty to Relocate; Subordination to City Use. Whenever the City, for any lawful public purpose, shall require the relocation or reinstallation of any property of the Provider or the Provider' s successors in any of the streets, alleys, rights-of-way, or public property of the City, it shall be the obligation of the Provider, upon notice of such requirement and written demand made of the Provider, and within a reasonable time thereof, but not less than thirty (30) calendar days, to remove and relocate or reinstall such facilities as may be reasonably necessary to meet the requirements of the City. Such relocation, removal, or reinstallation by the Provider shall be at no cost to the City; provided, however, that the Provider and its successors and assigns may maintain and operate such facilities, with the necessary appurtenances, in the new location or locations without additional payment, if the new location is a public place. Notwithstanding the foregoing, the duty of the Provider to install or relocate its lines underground shall be subject to the provisions of Article IV, Paragraph 4.4 below. Any money and all rights to reimbursement from the State of Utah or the federal government to which the Provider may be entitled for work done by the Provider pursuant to this Paragraph shall be the property of the Provider. The City shall assign or otherwise transfer to the Provider all rights the City may have to recover costs for such work performed by the Provider and shall reasonably cooperate with the Provider' s efforts to obtain reimbursement. In the event the City has required the Provider to relocate its facilities to accommodate a private third party, the City shall use good faith to require such third party to pay the costs of any such relocation. Notwithstanding anything to the contrary herein, the Provider' s use of the right-of-way shall in all matters be subordinate to the City' s use of the right-of-way for any public purpose. The City and the Provider shall coordinate the placement of their respective facilities and improvements in a manner which minimizes adverse impact on each other. Where placement is not otherwise regulated, the

facilities shall be placed with adequate clearance from such public improvements so as not to impact or be impacted by such public improvements.

4.3 Duty to Obtain Approval to Move Provider Property; Emergencies. Except as otherwise provided herein, the City, without the prior written approval of the Provider, shall not intentionally alter, remove, relocate, or otherwise interfere with any Provider facilities. Approval by Provider will not be unreasonable withheld. However, if it becomes necessary (in the judgment of the Mayor, City Council, City Engineer, Fire Chief, Police Chief, or their designees) to cut, move, remove, or damage any of the cables, appliances, or other fixtures of the Provider because of a fire, emergency, disaster, or other imminent threat thereof, these acts may be done without prior written approval of the Provider, and the repairs thereby rendered necessary shall be made by the Provider, without charge to the City. Should the City take actions pursuant to this section, the Provider shall indemnify, defend, and hold the City harmless from and against any and all claims, demands, liens, or liability for (a) loss or damage to the Provider' s property; and/or (b) interruptions of telecommunications services provided by the use of or through the Provider' s property (including telecommunications services provided by the Provider to the Provider' s customers), whether such claims, demands, liens, or liability arise from or are brought by the Provider, its insurers, the Provider' s customers, or third parties. If, however, the City requests emergency funding reimbursement from federal, state or other governmental sources, the City shall include in its request the costs incurred by the Provider to repair facilities damaged by the City in responding to the emergency. Any funds received by the City on behalf of the Provider shall be paid to the Provider within thirty (30) business days.

4.4 Location to Minimize Interference. All lines, poles, towers, pipes, conduits, equipment, property, structures, and assets of the Provider shall be located so as to minimize interference with the use of streets, alleys, rights-of-way, and open property by others and shall reasonably avoid interference with the rights of owners of property that abuts any of said streets, alleys, rights-of-way, or public property.

4.5 Repair of Damage. If, during the course of work on its facilities, the Provider causes damage to or alters any street, alley, right-of-way, sidewalk, utility, public improvement, or other public property, the Provider, at its own cost and expense and in a manner approved by the City, shall promptly and completely restore such street, alley, right-of-way, sidewalk, utility, public improvement, or other public property to its previous condition in accordance with applicable City ordinances, policies and regulations relating to repair work of similar character to the reasonable satisfaction of the City. Except in cases of emergency, the Provider, prior to commencing work in the public way, street or public property, shall make application for a permit to perform such work from the City Engineer or other department or division designated by the City. Provider shall also be required to obtain a road break permit from the Public Works

Department. Such permit shall not be unreasonably withheld. The Provider shall abide by all reasonable regulations and requirements of the City for such work.

4.6 Guarantee of Repairs. For a period of eighteen (18) months following the completion of the repair work performed pursuant to Paragraph 4.5 above, the provider shall maintain, repair, and keep in good condition those portions of said streets, alleys, rights-of-way, or public property restored, repaired or replaced to the satisfaction of the City. Provider will comply with all applicable City Ordinances related to the posting of bonds and guarantee of repairs.

4.7 Safety Standards. It shall be the Provider' s responsibility to ensure that the Provider' s work, while in progress, be properly protected at all times with suitable barricades, flags, lights, flares, or other devices as are reasonably required by applicable safety regulations or standards imposed by law including, but not limited to, signage in conformance with the Federal and State of Utah manuals on Uniform Traffic Control Devices.

4.8 City Supervision. The Provider shall construct, operate, and maintain its network within the City in strict compliance with all laws, ordinances, rules, and regulations of the City and any other agency having jurisdiction over the operations of the Provider. The Provider' s network and all parts thereof within the City shall be subject to the right of periodic inspection by the City; provided, however, that such inspection shall be conducted at reasonable times and upon reasonable notice to the Provider.

4.9 Provider's Duty to Remove Network.

a. The Provider shall promptly remove, at its own cost and expense, from any public property within the City, all or any part of the network when one or more of the following conditions occur:

i. This franchise grant is terminated or revoked pursuant to notice as provided herein; or

ii. This franchise grant expires pursuant to the terms of this Agreement.

b. The removal of any or all of the network by the Provider that requires trenching or other opening of the City's streets shall be done only after the Provider complies with applicable City Ordinances related to opening City Streets.

c. The Provider shall receive notice in writing from the City setting forth one (1) or more of the occurrences specified in Subsection 4.9 (a) above and shall have ninety (90) calendar days from the date upon which said notice is received to remove or abandon such facilities.

4.10 Notice of Closure of Streets. Except in cases of emergency, the Provider shall notify the City not less than three (3) business days in advance of any construction, reconstruction, repair, or relocation of facilities which would require any street closure which reduces traffic flow to less than two (2) lanes of moving traffic. Except in the event of an emergency, as reasonably determined by the Provider, no such closure shall take place without prior authorization from the City. In addition, all work performed in the traveled way or which in any way impacts vehicular or pedestrian traffic shall be properly signed, barricaded, and otherwise protected as required by Paragraph 4.7 above, and the City shall receive no less than 48 hours' notice of said closure.

4.11 Agreement to Abide by Construction and Technical Requirements. In addition to the provisions of this Article 4, the Provider expressly agrees to comply with all other provisions of City governing the construction and technical requirements of the Provider' s network and system.

ARTICLE V
POLICE POWERS

5.1 Police Powers. The City hereby expressly reserves, and the Provider hereby expressly recognizes, the City's right and duty to adopt, from time to time, in addition to provisions herein contained, such ordinances and rules and regulations as the City may deem necessary in the exercise of its police power for the protection of the health, safety and welfare of its citizens and their properties.

ARTICLE VI
SEVERABILITY

6.1 Severability. If any section, sentence, paragraph, term or provision of this Agreement is for any reason determined to be or rendered illegal, invalid or superseded by other lawful authority, including any state or federal, legislative, regulatory or administrative authority having jurisdiction thereof, or is determined to be unconstitutional, illegal or invalid by any court of competent jurisdiction, such portion shall be deemed a separate, distinct and independent provision, and such determination shall have no effect on the validity of any other section, sentence, paragraph, term or provision, all of which shall remain in full force and effect for the term of this Agreement or any renewal or renewals thereof. Provided that if the invalidated portion is considered a material consideration for entering into this Agreement, the Parties shall negotiate, in good faith, an amendment to this Agreement. As used herein, "material consideration" for the City is its ability to collect the Franchise Fee during the term of this

Agreement and its ability to manage its rights-of-way in a manner similar to that provided in this Agreement and the City's excavation ordinance (see City Ordinance Chapter 31). For the Provider, " material consideration" is its ability to use the rights-of-way for telecommunication purposes in a manner similar to that provided in this Agreement and the City's excavation ordinance (see City Ordinance Chapter 31).

ARTICLE VII
EARLY TERMINATION; REVOCATION OF FRANCHISE; OTHER REMEDIES

7.1 Grounds for Termination. The City may terminate or revoke this Agreement and all rights and privileges herein provided for any of the following reasons:

a. The Provider fails to make timely payments of the Franchise Fee as required under Article II of this Agreement and does not correct such failure within sixty (60) calendar days after written notice by the City of such failure;

b. The Provider, by act or omission, materially violates a material duty herein set forth in any particular within the Provider' s control, and with respect to which redress is not otherwise herein provided. In such event, the City, acting by or through its City Council, may determine, after a hearing, that such failure is of a material nature, and thereupon, after written notice giving the Provider notice of such determination, the Provider, within sixty (60) calendar days of such notice, shall commence efforts to remedy the conditions identified in the notice and shall have ninety (90) calendar days from the date it receives notice to remedy the conditions. After the expiration of such ninety (90) day period and failure to correct such conditions, the City may declare the franchise forfeited and this Agreement terminated, and thereupon, the Provider shall have no further rights or authority hereunder; provided, however, that any such declaration of forfeiture and termination shall be subject to judicial review as provided by law, and provided further, that in the event such failure is of such nature that it cannot be reasonably corrected within the ninety (90) day time period provided above, the City shall provide additional time for the reasonable correction of such alleged failure if the reason for the non-compliance was not the intentional or negligent act or omission of the Provider;

c. The Provider becomes insolvent, unable or unwilling to pay its debts; is adjudged bankrupt; or all or part of its facilities should be should under an instrument to secure a debt and is not redeemed by the Provider within sixty (60) calendar days; or

d. In furtherance of the Provider' s policy or through acts or omissions done within the scope and course of employment, a director or officer of the Provider knowingly engages in

conductor makes a material misrepresentation with or to the City that is fraudulent or in violation of a felony criminal statute of the State of Utah.

ARTICLE VIII
NOTICES

8.1 City Designee and Address. The Mayor of the City or his/her designee(s) shall serve as the City' s representative regarding administration of this Agreement. Unless otherwise specified herein, all notices from the Provider to the City pursuant to or concerning this Agreement shall be delivered to the City' s representative at 10 North Main Street, Cedar City, Utah 84720, or other such officer and address as the City may designate by written notice to the Provider.

8.2 Provider Designee and Address. Unless otherwise specified herein, all notices from the City to the Provider pursuant to or concerning this Agreement shall be delivered to _____ _____; with a copy to General Counsel at the same address.

8.3 Failure of Designee. The failure or omission of the City' s or the Provider' s representative to act shall not constitute any waiver or estoppel by the City or the Provider.

ARTICLE IX
INSURANCE AND INDEMNIFICATION

9.1 No Liability. Except as otherwise specifically provided herein, the City shall in no way be liable or responsible for any loss or damage to property, including financial or business loss (whether direct, indirect, or consequential), or any injury to or death of any person(s) that may occur in the construction, operation, or maintenance by the Provider of any of its lines and appurtenances hereunder, except to the extent of the City' s own negligence or willful misconduct. Notwithstanding any other provision of this Agreement, in no event shall either Party be liable for any consequential, special, incidental, punitive, indirect or similar damages.

9.2 Provider Indemnification of City. The Provider shall indemnify and, at the City' s option, defend and hold the City, its elected and appointed officers, agents, and employees thereof, harmless from and against any and all claims, suits, actions, liability and judgments for damages or otherwise harmless from and against claims, demands, liens, and all liability or damage of whatsoever kind on account of or arising from the exercise by the Provider of the related rights, or from the operations of the Provider within the City, and shall pay the costs of defense plus reasonable attorneys' fees. Said indemnification shall include, but not be limited to,

the Provider' s negligent acts or omissions pursuant to its use of the rights and privileges of this Agreement including construction, operation and maintenance of telecommunications lines and appurtenances, whether or not any such use, act or omission complained of is authorized, allowed, or prohibited by this Agreement.

9.3 Notice of Indemnification. The Provider shall give prompt written notice to the City of any claim, demand or lien that may result in a lawsuit against the City. The City shall (i) give prompt written notice to the Provider of any claim, demand or lien with respect to which the City seeks indemnification hereunder; and (ii) unless, in the City' s sole judgment, a conflict of interest may exist between the City and the Provider with respect to such claim, demand or lien, permit the Provider to assume the defense of such claim, demand or lien with counsel satisfactory to the City. If such defense is not assumed by the Provider, the Provider shall not be subject to any liability for any settlement made without its consent. Notwithstanding any provision hereof to the contrary, the Provider shall not be obligated to indemnify, defend or hold the City harmless to the extent any claim, demand or lien arises out of or in connection with a breach by the City of any obligation under this Agreement or any negligent or otherwise tortious act or failure to act of the City or any of its elected or appointed officers, agents, or employees.

9.4 Insurance. The Provider shall file a Certificate of Insurance with the City prior to commencing any action pursuant to this Agreement, and shall at all times thereafter maintain in full force and effect, at its sole expense, an acceptably policy or policies which have one (1) of the three (3) highest or best rating from the Alfred M. Best Company of liability insurance, including comprehensive liability insurance. The policy(ies) shall name the City as an additional insured and in their capacity as such, also the City' s elected and appointed officers, agents, and employees. Policies of insurance shall be in the minimum single limit amount of three million dollars ($3,000,000) per occurrence. The insurer(s) shall be authorized to write the required insurance in the State of Utah. The policy(ies) of insurance shall be maintained by the Provider in full force and effect during the full term of this franchise Agreement. Each policy of insurance shall contain a statement on its face that the insurer(s) will not cancel the policy or fail to renew the policy, whether for nonpayment of premium or otherwise, and whether at the request of the Provider or for other reasons, except after thirty (30) calendar days' advance written notice mailed by the insurer(s) to the City, and that such notice shall be transmitted postage prepaid.

9.5 City's Right to Intervene. In any suit in which the City is named as a party and which seeks indemnification from the Provider, and in which the City, in its own reasonable discretion, believes that a conflict of interest with the Provider exists, the City shall have the right to provide its own defense in connection with the same. In such event, in addition to being reimbursed for any judgment that may be rendered against the City which is subject to indemnification hereunder, together with all court costs incurred therein, the Provider shall reimburse the City for all reasonable attorneys' fees including those employed by the City in such case (s), as well as all

reasonable expenses incurred by the City by reason of undertaking the defense of such suit(s), whether such suit(s) are successfully defended, settled, compromised, or fully adjudicated against the City.

9.6 No Creation of Private Cause of Action. The provisions set forth herein are not intended to create liability for the benefit of third parties, but is solely for the benefit of the Provider and the City. In the event any claim is made against the City that falls under these indemnity provisions and a court of competent jurisdiction should adjudge, by final decree, that the City is liable therefore, the Provider shall indemnify and hold the City harmless of and from any such judgment or liability, including any court costs, expenses, and attorneys' fees incurred by the City in defense thereof. Nothing herein shall be deemed to prevent the Parties indemnified and held harmless herein from participating in the defense of any litigation by their own counsel at their own expense. Such participation shall not, under any circumstances, relieve the Provider from its duty of defense against liability or paying any judgment entered against such party.

9.7 Performance Bonds and/or Cash Bonds and other Surety. To ensure completion of the Provider' s performance of its obligations hereunder, the Provider shall furnish to the City a performance bond and/or cash bond from an insurer or guarantor that is acceptable to the City prior to commencing any action pursuant to this Agreement. At the City's sole discretion, and based on the project, a performance bond and/or cash bond may be required.

ARTICLE X
REMEDIES

10.1 Duty to Perform. The Provider and the City hereby agree to take all reasonable and necessary actions to assure that the terms of this Agreement are performed.

10.2 Remedies at Law. In the event the Provider or the City fail to fulfill any of their respective obligations under this Agreement, the City or the Provider, whichever the case may be, shall have a breach of contract claim and remedy against the other in addition to any other remedy provided by law, provided that no remedy that would have the effect of amending the specific provisions of this Agreement shall become effective without such action that would be necessary to formally amend the Agreement.

10.3 Third Party Beneficiaries. The benefits and protections provided by this Agreement shall inure solely to the benefit of the City and the Provider. This Agreement shall not be deemed to create any right in any person who is not a Party hereto and shall not be construed in any respect to be a contract in whole or in part for the benefit of any third party (other than the permitted successors and assigns of a Party hereto.)

10.4 Reserved Rights. Nothing contained herein shall be deemed to preclude the Provider from pursuing any legal or equitable rights or remedies it may have to challenge the action of the City.

10.5 Force Majeure. The Provider shall not be held in default or non-compliance with the provisions of this Agreement, nor suffer any enforcement or penalty relating thereto, where such non-compliance or alleged defaults are caused by strikes, acts of God, power outages, or other events reasonably beyond the Provider' s ability to control; however, the Provider shall not be relieved of any of its obligations to comply promptly with any provision of this Agreement by reason of any failure of the City to enforce such prompt compliance.

10.6 No Waiver. Nothing herein shall be construed as to imply that the City waives any right, payment, or performance based on future legislation where said legislation impairs this Agreement in violation of the United States or Utah Constitutions.

ARTICLE XI
TRANSFER OF FRANCHISE

11.1 Written Approval Required to Transfer. The Provider shall not transfer or assign any rights under this Agreement or the franchise granted herein to another entity unless the City first gives its approval in writing, which approval shall not be unreasonably withheld or delayed; provided, however, that the Provider may fully assign the franchise contained herein to its corporate parent, a corporate affiliate or a subsidiary, and also that inclusion of the franchise as property subject to the liens of the Provider' s mortgages or other security interests shall not constitute a transfer or assignment. A lease of the Provider' s system to a third party shall not constitute a transfer or assignment of the franchise for purposes of this Agreement. Any attempted assignment or transfer without such prior written consent shall constitute a default of the franchise and this Agreement. In the event of such a default, the City shall proceed according to the procedures set forth in this Agreement and any applicable state, federal or local law.

11.2 Procedure for Obtaining Approval for Transfer. At least ninety (90) calendar days before a proposed assignment or transfer of the Provider' s franchise is scheduled to become effective, the Provider shall petition in writing for the City Council's written consent for such a proposed assignment or transfer. The City shall not unreasonably withhold its consent to such an assignment or transfer. However, in making such a determination, the City Council may consider the following:

a. Experience of the proposed assignee or transferee (including conducting an investigation of the proposed assignee or transferee' s service record in other communities);

b. Qualifications of the proposed assignee or transferee;

c. Legal integrity of the proposed assignee or transferee;

d. Financial ability and stability of the proposed assignee or transferee;

e. The corporate connection, if any, between the Provider and the proposed assignee or transferee; and

f. Any other aspect of the proposed assignee's or transferee's background which could affect the health, safety and welfare of the citizenry of the City as it relates to the operation of a telecommunication network.

11.3 Certification of Assignee. Before an assignment or transfer is approved by the City Council, the proposed assignee or transferee shall execute an affidavit acknowledging that it has read, understands, and intends to abide by this franchise Agreement.

11.4 Effect of Approval. In the event of any approved assignment or transfer, the assignee or transferee shall assume all obligations and liabilities of the Provider, except that an assignment or transfer shall not relieve the Provider of its liabilities under this franchise Agreement until the assignment actually takes place or unless specifically relieved by federal, state, or local law, or unless specifically relieved by the City Council at the time an assignment or transfer is approved.

11.5 Transfer upon Revocation by the City. The Provider and the City hereby agree that in the event of a lawful revocation of this franchise, at the Provider's request, which shall be made in the Provider's sole discretion, the Provider shall be given a reasonable opportunity to effectuate a transfer of its network to a qualified third party. The City further hereby agrees that during such a period of time, it shall authorize the Provider to operate pursuant to the terms of its prior franchise Agreement; however, in no event shall such authorization exceed a period greater than six (6) months from the effective date of such revocation. If, at the end of that six (6) month period, the Provider is unsuccessful in procuring a qualified transferee or assignee of its network which is reasonably acceptable to the City, the Provider and the City may avail themselves of any rights they may have pursuant to federal or state law; it being further agreed that the Provider's continued operation of its network during the six (6) month period shall not be deemed to be a waiver or extinguishment of any rights of either the City or the Provider. Notwithstanding anything to the contrary set forth herein, neither the City nor the Provider shall be required to violate federal or state law.

11.6 Abandonment of Facilities by the Provider. The Provider, with the consent of the City, may abandon any underground facilities in place, subject to the requirements of the City. In such an event, the abandoned network shall become the property of the City, and the Provider shall have no further responsibilities or obligations concerning those facilities.

ARTICLE XII
GENERAL PROVISIONS

12.1 Binding Agreement. The Parties hereby represent that (i) when executed by their respective parties, this Agreement shall constitute all the legal and binding obligations of the Parties pertaining to the subject matter contained herein; and (ii) that each Party has complied with all relevant statutes, ordinances, resolutions, by-laws, and other legal requirements applicable to their operation in entering into this Agreement. This Agreement shall be binding upon the heirs and successors, administrators and assigns of each of the Parties.

12.2 Governing Law. This Agreement shall be construed, interpreted and governed in accordance with the laws of the State of Utah. All disputes resulting in legal action shall be governed by the laws of the State of Utah. Jurisdiction shall be vested in the District Courts in and for the State of Utah. Venue is vested in the 5th Judicial District Court in and for Iron County, State of Utah or in any other successor district court of competent jurisdiction.

12.3 Interpretation of Agreement. The invalidity of any portion of this Agreement shall not prevent the remainder of this agreement from being carried into effect. Whenever the context of any provision shall require it, the singular number shall be held to include the plural number, and vice versa, and the use of any gender shall include any other and all genders. The paragraph and section headings in this Agreement are for convenience only and do not constitute a part of the provisions hereof.

12.4 Entire Agreement and Amendments. This Agreement and all attachments hereto constitute and represent the entire agreement and understanding between the Parties hereto and replaces any previous agreement, understanding or negotiation between the Parties with respect to the subject matter hereof, and may be modified or amended, supplemented, or changed only by the written agreement of the Parties, including the formal approval of the City Council. No oral modifications or amendments shall be effective.

IN WITNESS WHEREOF, the parties have hereunto set their hands the day and year set forth above.

CITY OF CEDAR CITY, UTAH

_____

STEVE NELSON, MAYOR
Cedar City Corporation

Date: _____

ATTEST:

_____

RENON SAVAGE, CITY RECORDER

STATE OF UTAH)
: Ss.
COUNTY OF IRON)

This is to certify that on the ____ day of _____, 20___, before me, the undersigned, a Notary Public, in and for the State of Utah, duly commissioned and sworn as such, personally appeared Steve Nelson, known to me to be the Mayor of Cedar City Corporation, and Renon Savage known to me to be the City Recorder of Cedar City Corporation, and acknowledged to me that he the said Steve Nelson and she the said Renon Savage executed the foregoing instrument as a free and voluntary act and deed of said corporation, for the uses and purposes therein, and on oath state that they were authorized to execute said instrument, and that the seal affixed is the corporate seal of said corporation.

IN WITNESS WHEREOF, I have hereunto set my hand and affixed my official seal the day and year hereinabove written.

_____

NOTARY PUBLIC

Forged Fiber 37 LLC

By: _____

Title: _____

Date: _____

STATE OF _____)
: Ss.
COUNTY OF _____)

On this ____ day of _____, 20____, _____ personally appeared before me and duly acknowledged to me that he/she signed the above and foregoing document.

_____
NOTARY PUBLIC

CEDAR CITY COUNCIL
AGENDA ITEM 3

DECISION PAPER

TO: Mayor and City Council

FROM: Erick Cox, LaNor Warby & Mike Kenfield

DATE: 17 May 2026

SUBJECT: Cedar City Firemen's Relief Association fundraiser

PROBLEM: The Cedar City Firemen's Relief Association is requesting council approval to advertise on city fire apparatus. Please see the attached letter from the fire department volunteer command staff.

RECOMMENDATION: Approve the Cedar City Firemen's Relief Association fundraiser.

5/15/2026
To: Mayor and Council Members
From: CC Firemen's Association
Re: Donations Collection

All,

We, the Cedar City Firemen's Relief Association, a 501 3c nonprofit organization, are requesting your assistance in collecting donations to be used for our various charitable, humanitarian and wellbeing projects.

Below are examples of a few of the things we have contributed to and supported from our organization.

Providing Christmas gifts and food for several less fortunate families in our community each year.

Provided Matching Funds with the City for the purchase of Exercise Equipment for firefighter wellbeing.

Provided funds for family support during firefighter injury.

Provided new roofs for the main and north fire stations, through application to one of our local manufacturers, and their community support grants, for the donation of their products and the installation with their local partners.

U of U Burn Center Donations.

Supporting Community Involvement activities, and offering opportunities for the community to participate, through the purchase of "Cedar City Fire Dept. Supporter" T-shirts, that we have offered for sale at these events.

Our Volunteers have shown up for all kinds of extracurricular community activities in support of the Cedar City Fire Department and make up 66% of the group.

We are asking your approval to place a 3" sticker (shown below) on the Department's Vehicles to allow those who want to donate to our Association in support of our efforts, of giving back to and supporting our community in various ways, to do so by scanning the QR code displayed, this will provide a convenient and easy way for us to gather donations while minimizing the work of facilitating such.

We appreciate your continued support of our efforts and look forward to working together in partnership to provide for our community.

Kind Regards,

Erick Cox
Mike Kenfield
LaNor Warby

100% SCALE
Printed Vinyl
w Kiss Cut

OPTION 1

QTY TBD
3"W x 3"H

CEDAR CITY
CITY COUNCIL AGENDA ITEM 4
STAFF INFORMATION SHEET

To: Mayor and City Council

From: Jonathan Stathis

Council Meeting Date: May 20, 2026

Subject: **Public hearing to consider an ordinance modifying City Ordinance 26-V-18 regarding driveway requirements.**

Discussion: A proposal has been brought to the City to change the maximum driveway width in the Residential Estates (RE) zone. Currently, Section 26-V-18(A)(1) limits the width of all residential driveways to a maximum width of 34 feet. The proposed ordinance would change the maximum driveway width to 50 feet for properties in the Residential Estates (RE) Zone.

In the Planning Commission meeting where this item was discussed, City staff raised several issues and concerns regarding the proposed ordinance change:

1. Balance Public Access and Public Interest: Driveway width limits balance private access with public safety, infrastructure, and visual quality concerns in neighborhoods.
2. Proportionality and Neighborhood Character: Driveway width standards provide reasonable property access while preserving green space and residential buffers.
3. Predictability in Land Use Regulation: Clear driveway width rules reduce disputes, streamline permitting, and support consistent enforcement by City staff.
4. Maintain Neighborhood Character: Driveway width limits preserve front yards, preventing paved surfaces from dominating property frontages.
5. Zoning and Visual Identity: Zoning standards prevent wide driveways from turning front yards into parking lots, supporting community aesthetics and property values.
6. Impact on Livability: Narrower driveways and increased landscaping create walkable, calm streets that encourage social interaction.
7. Conflict Zones and Safety: Wider driveways increase conflict zones where vehicles cross sidewalks and bike paths, raising collision risks.

8. Driver Visibility and Behavior: Narrower driveways encourage slower, more deliberate vehicle movements, improving safety near vulnerable users.
9. Consistent Standards and Traffic Safety: Uniform driveway widths improve sight lines and reduce unexpected driver maneuvers.
10. Drainage: Conveying drainage through longer driveways can tend to create ponding, slower movement of water, and settlement of solids which can lead to maintenance issues and flooding problems.
11. Right-of- Way Elements: The right-of-way can include sidewalks, trees, utilities, drainage, street lights, and bike lane amenities that must be preserved.
12. Driveway Width Limits Conflict: Limiting driveway widths prevents conflicts with right-of-way infrastructure and enables future improvements without costly adjustments.
13. Future Transportation Flexibility: Driveway width standards protect the right-of-way to support future ADA accessibility and evolving mobility needs.
14. Safety and Traffic Flow: Limiting the width at the street reduces the number of vehicles entering or exiting at one time, minimizing conflicts with street traffic and pedestrians.
15. Infrastructure Protection: A smaller, regulated curb cut reduces the amount of public sidewalk and curb that needs to be removed, protecting existing utilities and underground infrastructure.
16. Drainage Control: Drive approaches limit the drainage water carrying capacity of the gutter.
17. Snow Storage: Limiting driveway width ensures there is adequate space for snow storage within the public right-of-way during the winter, rather than forcing snow into the street or onto neighboring properties.
18. Aesthetics and Green Space: Limiting paved areas preserves neighborhood character, maintaining a balance between landscaping and concrete in front yards.
19. On-Street Parking: Excessively wide driveways reduce the amount of available on-street parking for neighbors and visitors.
20. Common Standards for Single-Family Residential: Maximum widths often fall between 20-30 feet, though some jurisdictions limit it to 20 feet or 35% of lot width.

Information regarding residential driveway widths in Utah are shown in the following table:

Jurisdiction	Maximum Width
Cedar City	34 feet
Salt Lake City	22 feet / 30 feet
St. George	50 feet / 50% of frontage
Logan	22 feet
Provo	35 feet
Bountiful	30 feet
Tooele	30 feet / 33% of frontage

The proposed ordinance change is included as an attachment to this Information Sheet. Also, a copy of the Planning Commission minutes are included with this Information Sheet.

Please consider whether to approve or disapprove the proposed ordinance change. Thank you for your consideration.

CEDAR CITY
ORDINANCE 0527-26-

AN ORDINANCE AMENDING 35-10 ESTABLISHING NO PARKING ZONES IN THE VICINITY OF 200 NORTH AND 100 EAST

WHEREAS, Cedar City has adopted Chapter 35, Section 10 of the ordinance of Cedar City, Utah, and said provisions contain specific parking restrictions; and

WHEREAS, due to heavy traffic on both 100 East and 200 North (Freedom Blvd.), vehicles parked along sections of 200 North create an inordinate danger to the motoring and pedestrian public by reducing sight distance; and

WHEREAS, the City Council finds that it is in the best interests of the health, safety, and general welfare of the citizens of Cedar City to prohibit parking in the listed location to prevent parking from interfering with the safety and efficacy of the intersection.

NOW THEREFORE, be it ordained by the City Council of the Cedar City, in the State of Utah, as follows:

SECTION 1: **AMENDMENT** "Section 35-10 Parking Restrictions" of the Cedar City Municipal Code is hereby *amended* as follows:

AMENDMENT

Section 35-10 Parking Restrictions

A. The parking restrictions contained herein shall be marked with upright signs complying with standards set forth in the Uniform Manual on Traffic Control Devices and where appropriate painting the curb in a color as designated in the Uniform Manual on Traffic Control Devices.
B. No parking shall be allowed in the following areas:
    1. from 1000 West to Interstate 15 Freeway on the north side of 200 North in Cedar City, Utah;
    2. sixteen feet south of the 200 North right of way on the West side of 100 West;
    3. along 4050 West extending from the crosswalk in front of Iron Springs Elementary in the following manner: on the east side of the street 85 feet to the south of the crosswalk and 50 feet north of the crosswalk; and on the west side of the street 50 feet south of the crosswalk and 85 feet north of the crosswalk;
    4. on the north side of 1045 North Street extending east 56 feet from the point of curvature of the east curb return on the intersection of Country Side Terrace Drive (250 West);
    5. an approximate 16-foot-long area on the north side of Center Street at

approximately 46 West, the center of which is located 179 feet west of the southeast corner of lot 1, Block 36, Plat B, Cedar City Town Survey;

6. the south side of 200 North from Main Street to 100 East;
7. the south side of College Avenue from 100 West to 300 West;
8. along Royal Hunte Drive:
    a. extending from the crosswalk in front of Cedar Middle School in the following manner: on the North Side of the street 150 feet to the east of the crosswalk and 50 feet west of the crosswalk;
    b. on the south side of the street 50 feet east of the crosswalk and 150 feet west of the crosswalk;
    c. from the east entrance of the Aquatic Center parking lot extending 220 feet to the east; and
    d. on the south side of the street extending from 1850 West to 2200 West.
9. on the south side of Cross Hollow Road extending 150 feet west from the main entrance and exit to Walmart (said entrance/exit is the second entrance/exit on the south side of Cross Hollow Road located west of the Royal Hunte Drive and Cross Hollow Road intersection);
10. beginning at the intersection of Main Street and 1925 North and extending west along the north and south side of 1925 North for 1300 lineal feet;
11. along 1895 West Cross Hollow Drive, beginning at the Walmart Northeast entrance and running west to the CATS bus stop;
12. on the east side of Cove Drive from the centerline of the LDS Temple entrance extending south to the north side of the intersection of Cove Drive and Silver Crest Circle; and on the west side of Cove Drive from the centerline of the LDS Temple entrance extending 250 feet to the north;
13. on the north side of DL Sargent Drive for 35 feet in front of the Public Safety Building;
14. in front of the SUU Sports Performance Building for 250 feet on each side of the street;
15. in front of the South Elementary School for 100 feet on the southside of 400 South starting from the crosswalk going west and 100 feet on the northside of 400 South starting from the crosswalk going east;
16. along the south side of Coal Creek Road starting at 300 West and going 80 feet to the west;
17. on the west side of 450 West starting at 245 South and going to 280 South;
18. on the west side of Cove Drive from the trail crosswalk 30 feet to the north, and on the east side of Cove Drive from the trail crosswalk 30 feet to the south;
19. along the southerly half of Lot 1 on Eagle Ridge Drive in the Canyon at Eagle Ridge Phase 2 subdivision; and
20. on the south side of 800 South from the crosswalk 20 feet to the east and 20 feet to the west, and on the north side of 800 South from the crosswalk 20 feet to the east and 20 feet to the west, and on the north side of 800 South from the

east parking lot entrance 50 feet to the east.

21. Beginning at the intersection of Royal Hunte Drive and Sage Drive and extending east/northeast along the south and east side of Sage Drive to the Pioneer Center PUD entrance and extending east/northeast along the north and west side of Sage Drive to Regency Road.
22. on the south side of Harding Avenue between 100 West and Main Street with a loading zone of 40 feet placed on the north side of Harding Avenue beginning 35 feet east of 100 West extending to 75 feet east of 100 West.
23. on the west side of 500 West beginning 125 feet north of 200 North extending 175 feet north of 200 North.
24. on the west side of 400 East beginning at the south edge of the driveway entrance into East Gate PUD Unit 2 and extending 50 feet south of the driveway entrance.
25. on the east side of Airport Road beginning at the intersection of Kitty Hawk Drive and extending 380 feet south of the intersection.
26. on the north side of Kitty Hawk Drive beginning at the intersection of Airport Road and extending 224 feet east of the intersection.
27. on the north and south sides of Canyon Ranch Drive beginning at the intersection of Main Street and extending east until Canyon Ranch Drive intersects with Auto Mall Drive and Wedgewood Lane, and extending west to the west side of 2610 North Canyon Ranch Drive.
28. on the north and south sides of the reduced width roadway between the cul-de-sacs on 2125 South Circle and Moon Crest Drive.
29. in the vicinity of the intersection of 600 South and 860 West:
    a. on the south side of 600 South Street 250 feet west and 60 feet east of 860 West;
    b. on the north side of 600 South Street 120 feet west and 200 feet east of 860 West;
    c. on the north side of 600 South Street 100 feet east of 780 West;
    d. on the west side of 860 West Street 80 feet starting 144 feet south of the center of 600 South; and
    e. on the east side of 860 West Street 62 feet south and 100 feet north of the Cedar High School bus entrance.
30. in the vicinity of the intersections of 1045 North with 400 West and Northfield Road:
    a. on the west side of Northfield Road 160 feet north of 1045 North;
    b. on the north side of 1045 North 65 feet west and 113 feet east of Northfield Road; and
    c. on the south side of 1045 North 110 feet west and 330 feet east of 400 West.
31. on the north side of 200 North 60 feet west and 52 feet east of 100 East.

C. The following areas shall have the following restrictions on parking, stopping, and standing:

1. on the east side of the street in front of the County office building located at 82

North and 100 East fifteen (15) minute parking only;

2. student pick up and drop off only between 8:30 a.m. and 4 p.m. along 400 South adjacent to South Elementary;
3. from 1 p.m. to 4 p.m. Monday through Friday on the north side of 200 North extending from 600 West to 500 West; and the east side of 600 West extending 185 feet north from the intersection of 200 North and 600 West;
4. student pick up and drop off only between 8:00 a.m. and 4 p.m. along the northside of 70 South (College Avenue) for 400 feet, with approximately 200 feet going west of 300 East and 200 feet going east of 300 East;
5. school bus loading and drop-off zone only between 8:00 a.m. and 4:00 p.m. Monday through Friday on the east side of 4100 West for a distance of 472 feet along the frontage of Iron Springs Elementary School; and
6. no parking from 8 p.m. to 6 a.m. on 900 North beginning 850 feet west of Main Street to 300 West.

AMENDED BY CEDAR CITY ORDINANCE NO. 0112-11, 0209-11,1023-13, 1211-13, 0611-14, 0813-14-1, 0708-15, 0921-16-1, 0208-17-1, 0913-17, 0927-17-1, 0124-18-1, 0725-18-2, 0626-19-1, 0129-20, 0708-20-8, 1028-20-1, 0324-21-1, 0713-22-9, 0914-22, and 1214-22.

PASSED AND ADOPTED BY THE CEDAR CITY CITY COUNCIL

_____.

	AYE	NAY	ABSENT	ABSTAIN
Phillips	_____	_____	_____	_____
Cox	_____	_____	_____	_____
Wilkey	_____	_____	_____	_____
Schmidt	_____	_____	_____	_____
Galan	_____	_____	_____	_____

Presiding Officer

_____

STEVE NELSON, MAYOR, Cedar City

Attest

_____

RENON SAVAGE, RECORDER, Cedar City

4. PUBLIC HEARING

Ordinance Text Amendment	Section 26-V-18	Perasic/ Radiant Blue Const.
(Recommendation)	Driveways in RE zone to be 50' max	

5. PUBLIC HEARING

Engineering Standards Revision	Detail C3	Perasic/ Radiant Blue Const.
(Recommendation)	Driveways in RE Zone	

Webster: Next is ordinance text amendment, can four and five be handled together? Who's presenting that? Perasic? I think Radiant Blue Construction?
Kent: I thought that Radiant Blue Construction was going to be here, they're not. We can still talk about it if you'd like. Don and I are prepared to talk about it.
Webster: Yeah, go ahead, let's do, we can still have the public hearing on it without them here.
Kent: So, I'll start off on this, we have minimum driveway widths in our standards or excuse me, maximum driveway widths, well and minimum. On your typical home, our typical residential use we have a maximum driveway width of 34 feet, and on commercial and industrial you know the nonresidential we do have a maximum driveway width of fifty feet. You have more needs right you have traffic coming in and out at the same time on those driveways. You need wider driveways so that's what our current standard has. What the request is here from the applicant is to have, in the RE zone only, they would like to see us increase the maximum driveway width for those residences to 50 feet
Webster: From?
Kent: From the 34 that it is currently.
Burgess: This is kind of related, but if you do two driveways, how far apart do they have to be? Could you do 34 and one foot and 34?
Kent: No, they have to have a separation between the two.
Don: It's 12 foot in the zoning ordinance.
Kent: Yeah, you need to be able to transition out of the drive approach into a landing for ADA reasons, and then go back into the next drive approach, right? So, this is what they're requesting. If we look in the detail, they're wanting the same thing. They want us to modify this in the detail where we have the 34-foot max on the residential to give the ability for the 50-foot max in the RE zone. So that's the proposal, what is driving this is a specific home they've run up against an issue. Where they've created this drive approach here that is wider than 34 feet. They have a secondary structure in the back, a casita there an ADU, that they were wanting to have a nice direct shot that they were wanting to have a nice direct shot for people to be able to drive back to it from the street, and so this was put in as the concrete driveway being significantly wider than the 34 feet. I think it's, if I remember correctly, it's around 45 feet, is the width that they put that in at. So, they were looking at this saying, well, in the RE zones you have more frontage than you do in most of the other zones. So, they were wanting to see if the minimum or excuse me the maximum driveway width could just be increased. In the RE zone, as you look around, this is in 4B Ranch. This particular location right across the street, you see where they've got concrete coming back. This isn't a very good picture; apologize for that, concrete coming back along the garage. They've kept the driveway to where it meets our standard, and then they widen it out as

they come back. You go around this neighborhood, you see that in numerous locations, where that's exactly what the homeowners have done. They start out narrow, they go wider.
Jett: So, this is their effort to skirt. So, the question is why RE zone only, why not every zone allow it if they can do it?
Kent: And that's a good question, should it apply only to the RE. I think the reasoning for applying it to the RE is the fact that you have more frontage to work with. So, the negative effects of having a wider driveway, which we'll talk about here in just a minute, are perhaps lessened to some degree in when you have wider frontages. I drove through 4B Ranch the other day, and I was noting all over in this development location where we had these driveways that start out narrow and then go wide. Another one here, that's what others have done. On this one they didn't do that; they just made the driveway wider than it was supposed to be. Then they're asking now, this actually went to board of adjustments, their particular case, not the ordinance change, their particular case went to board of adjustments and was not approved. They're looking at it for a different route, wanting this the planning commission and city council to consider the idea that perhaps a wider drive approach in this zone would be appropriate. So, that's the proposal. So that's that part of it. We've tried to take this and say okay, what should we be doing here? Why do we even have the standard that we have? We've asked ourselves that question. So, I'd like to run you through just a little bit of information about maximum driveway widths.
Webster: So, can I ask you a real quick question? So, if 34 is the width, how far does the 34 have to go? Can you go six inches and then…
Kent: Do you want to answer that, Don?
Don: So, the ordinance indicates that you can't park in the front yard setback unless it's on a permitted driveway. So, kind of like those images Kent showed you, they curve back basically to that twenty-foot line and then the ordinance says more or less you're free to go.
Kent: I think it's at the right of way line that they have to comply with the 34, is that correct Don?
Don: It's 34 is the driveway width. And the way we've interpreted that is that it would continue through to your front setback because your front setback should be landscaped with exception of those permitted driveways.
Kent: So, I wanted to run you through just a little bit of information about why, and we're not the only city with maximum driveway widths, right? Every city has maximum driveway widths, as far as I know. I'm not aware of one that doesn't. And we'll get in a minute to some of what some of the other cities around the state are doing. But some of the key reasons for this, part of it is really safety and traffic flow. The wider that drive approach. You can have multiple vehicles coming out of it at once. You have less predictability on where those vehicles are coming out for a pedestrian walking down the sidewalk. They're exposed through that drive approach for a longer distance as they come through. The safety aspect of it becomes more critical on major roadways than it does on subdivision streets. Admittedly. But there is a concern. You know, with driveway widths in general, of when they get too wide, they decrease the safety. So that's one reason why these kinds of standards even exist. Another thing is more of an infrastructure protection when you have a smaller regulated curb cut. Then that reduces the amount of public sidewalk and curb that you are dealing with in that drive approach whenever if there's a need to make any modification, there it makes it easier to protect the underground utilities and other infrastructure. Drainage control: when you have drive approaches, those drive approaches do limit the drainage water carrying capacity of the gutter. Even if we still have the same area, so to

speak, available, you know you're changing the shape of the channel that the water's going through, and every time you're changing that, you're getting some head loss in that, and so you are reducing the carrying capacity of the curb and gutter. Snow storage when we plow, the wider the drive approaches, that means the shorter the available space between drive approaches where you can pile snow. I know the last couple of years haven't seemed like snow plowing is an issue, but we're going to get winters again where we're plowing a lot of snow, right? And so, snow storage is a consideration. Aesthetics and green space. When you limit, you know that those driveway widths it gives you more of that frontage of the lot that can be in some type of landscaping, less of it in in concrete driveway. Then you get the on-street parking. When you have the wider the drive approaches, the less space there is to put snow in. Well, that's also the less space there is for people to park. And that can become problematic, and Don will run us through some of that here in just a second. What some of the common standards around the country are, you typically see on single family residential homes, maximum widths somewhere between twenty and thirty feet is pretty common. There are a lot that do allow more than thirty feet, but usually not by much. Some jurisdictions will say okay you have so many feet, but you also have a requirement on some percentage of the lot width that can be driveway. So, the narrower your lot, the narrower your driveway maximum driveway would potentially be, right? Most places have standards on circular driveways that you have to have a certain amount of frontage to even be able to have more than one. But a lot of times when there are circular driveways, they're considered one way, and those are actually narrowed up to somewhere in the ten to twelve feet foot range in a lot of jurisdictions. Commercial and industrial, yeah, those are wider. They need to accommodate more traffic. They need to accommodate traffic coming in and out at the same time, and they need to generally accommodate larger vehicles. So those we do go in the forty-to-fifty-foot range is pretty common for commercial drive approaches. So, I pulled these cities at random, please don't think I searched for the ones that fit my argument because I didn't. I just pulled these at random and looked at what they have. So here in Cedar City, single family residential home, just a house right here, our standard is thirty-four feet. Salt Lake, they have two different widths. They allow some of their zones. They only allow twenty-two feet on the width. Some they allow thirty, but even the ones that they allow thirty, that's less than what ours are. Saint George is the only one I found that allows something wider. They were allowing up to fifty feet. Although I found conflicting information on their website on their widths. In the most generous location, on their website it showed fifty feet for the driveway width, but you're limited to fifty percent of the frontage. So, if that lot's only seventy feet wide, which is what a lot of our lots are allowed to be now, I think in just about all of our zones, other than maybe the RE, we allow the seventy-foot width. If you were limited to fifty percent, you couldn't have more than a thirty-five-foot-wide driveway anyway in Saint George. If you had a seventy-foot-wide lot, if you only had a fifty-foot-wide lot, you could only go twenty-five feet, on the driveway. Logan, I looked at theirs; they came in at twenty-two feet, the same as what Salt Lake had on some of theirs. Provo was right about where we are at thirty-five, Bountiful thirty and Tooele was at thirty. I was trying to pick, you know, some larger cities and cities that are more our size as I was going through this. Tooele, in addition to the thirty foot maximum requirement, also had that only a third of the frontage could be drive approach. So once again. If you had a seventy-foot drive approach, a third of seventy is only twenty-three feet, right? So, you wouldn't even be able to get thirty if you had a seventy-foot-wide lot. So, those were just some of the things I wanted to kind of throw out. The question was asked to me after the sketch meeting, where this request was discussed that the applicant had, why do we have the standard that we have? And so,

as Don and I have tried to look into that's where the information that he and I are presenting to you has come up, so I am going to flip over to Don's slides. And we have some repetition here, but Don will find a good way to deal with that.
Don: Thank you chair and members of the commission. The question is what should the maximum driveway width be? Why do we have these standards? I think Kent covered a lot of what's in mine, but I think Kent liked the pictures in mine too.
Kent: I did like the pictures, so I didn't put any pictures in mine.
Don: Here is our current standards for residential. We have minimum of a twelve foot for a one-way driveway. A maximum, I mean, I am sorry, minimum twenty- four feet for two-way access. So, that's whether you're going to Walmart or even a multifamily home when you're trying to squeeze by another vehicle, twenty-four foot is our minimum, and then the maximum that we're discussing is thirty-four feet, and then a maximum in commercial areas of fifty feet. Next slide, Kent. So why do we do these things? I think the big kind of overarching argument is we're balancing access and public interest at the same time, right? So, driveway width limits balance the private access with public safety that Kent talked about infrastructure, and certainly, a little bit more in the planning realm than the engineering realm, but I think visual quality concerns in the neighborhood. What do we want and what do we expect our residential neighborhoods to look like? So that's proportionality and neighborhood character standards match driveway size to reasonable property access. While preserving green space and residential buffers and also gives the neighborhoods and the neighbors some predictability in what's going to happen in their neighborhoods. Clear driveway with rules that reduce disputes. Obviously, they streamline permitting and support consistent enforcement across communities. So, these two slides show a difference, and I think they're quite stark. Now obviously these are not large R E type lots, but it shows you what character means, and in my opinion, that character counts. That neighborhood there's certainly smaller lots. But that is something I think we don't want to see in our neighborhoods. That is completely paved over, and your front yards are not a place of community. They're not a place that you really want to walk around. They are parking lots. So, maintaining neighborhood character, I just touched on that. Here's another two pictures. It's just a different neighborhood, same situation. You can see in these neighborhoods where you have driveway after driveway, folks clamor for a little piece of green even in between. They'll plant obviously these are from areas that I know in Southern California, but they'll stick a palm tree in the middle if they can just get two or three feet between them and their neighbor. So, Zoning and visual identity zoning standards prevent wide driveways from turning front yards into parking lots. I kind of mentioned that it supports community aesthetics and property values. And they have an impact on livability. Between these two pictures, there's certainly one street I'd rather walk down than the other. That slide also shows what Kent was talking about the number of conflicts, as you have somebody walking down those streets, you know, if you are on a big wheel, maybe I am dating myself do kids have big wheels anymore? I don't know, but that's probably not the spot.
Webster: Electric Big Wheels
Don: Electric big wheels, thank you, that's probably not the spot that's the best for pedestrians, bicyclists, and even big wheels.
Jett: Why is that?
Don: Due to the number of conflicts. If you are walking down that sidewalk, you are looking out for a vehicle almost every step that you take. So I'm getting a little ahead of myself, but wider driveways increase conflict zones where vehicles cross sidewalks and bike paths, raising

collision risk. Narrow driveways encourage slower, more deliberate vehicle movements, improving safety near vulnerable users. And uniform driveway risks maintain curb space; they improve sight lines and reduce uninspected drivers or driver maneuvers. Just another slide that is driveway to driveway. Kind of shows you the stark difference between what our standard is and what it potentially could be. Drainage, Kent is more of an expert at this, Kent and Dallas, but you can see where that water slows down and changes course.
Jett: Yeah, but that's an unfair picture that you're showing, Don. Because the curb traditionally, the driveway goes all the way to the curb, and there's not even a curb on this one here. On this driveway, so that's right.
Kent: And in many places in the RE zone where the change is requested, there's no curb.
Jett: I get it. But I want to talk about other zones too.
Randall: Right, but this request is RE, so that's why you're giving a picture of what's the equivalent to an RE, which we don't need curb gutter or sidewalk.
Don: So, right away in infrastructure management, the right of way includes everything: sidewalks, trees, utilities, drainage, streetlights, bike lanes et cetera. Limiting driveway widths does prevent conflicts with the right of way infrastructure. It enables future improvements potentially without more costly adjustments. Narrower driveways reduce breaks and curbs and sidewalks, lowering maintenance costs for the property owner and the city. As we touched on quite a bit, driveway width standards protect the right of way to support future ADA accessibility and evolving mobility needs. So, as we kind of went down this rabbit hole a little bit, I think Kent and I tried to ask ourselves, "Why is it thirty-four feet? Right? Why is it that magic number?" And as you saw in other cities, many cities limit those driveway widths significantly more than we do. Going through our ordinance, originally, our R2 zone had a minimum lot width of seventy feet. We've now reduced that to fifty. So, these thirty-four foot still applies, even if you have a fifty-foot lot, but thirty-four feet is just shy of that, just shy of fifty percent of seventy. So, it kind of gets in line with no more than fifty percent of your lot width in the front yard should be paved. In the R1 now and in the RE, that minimum lot width is now only seventy feet. It used to be ninety feet. So, this thirty-four-foot width gets you up to basically fifty percent of your lot can be paved, and if you had a really wide lot, you could actually do two thirty-four-foot driveways. So, I think that's where the original logic came from. I think also the thirty-four feet was probably intended to accommodate the two side-by- side driveways we see in most of our twin homes, where we butt the garages, the two two car garage doors together, I think you could argue maybe that needs to go to thirty-six feet. That's not part of this discussion, but just so we could get a driveway a little bit wider to get those four cars at nine feet apiece and get that driveway just a little bit wider. So, with reduced lot width in the RE zone, and I think we're going to see more REs come in with those seventy-foot lot widths. I think staff's recommendation to the planning commission, amongst all the other things we talked about, would be to leave it at thirty-four percent.
Webster: Thirty- four percent, or feet
Don: I am sorry, thirty-four feet, almost fifty percent, and on fifty-foot lots in the R2 zone, and the fifty- five-foot lots, which we need to still address in the R3. It's significantly more, I think it's important for safety. The aesthetics of our neighborhood. It's also important for runoff and with all that put together, I think thirty-four feet is not a bad standard at this point. So, I'll be happy to answer questions.

Jett: As it relates to aesthetics, we're becoming less and less plant-driven around here because of the access to water and the cost of water, so forth. We're going more of a desert scape, and I know, as one of our former council members called it, "hellscape." You have a lot of homes that are in R1 and and yeah, R1 that have a three-car garage, and they have a motorhome garage, right. Right next to it, by widening this, we're getting more cars off the street. And, you want to talk conflicts with neighbors, that's where you have conflicts with neighbors when you're parked in front of their home, where their kids and grandkids and friends can't come over and park, and so forth. So that's a reason to also widen the driveway. I think to do this, I think we need to. I have no problem with the concept of what you're discussing, but I think we need to have something more to it. That say, "Hey, if your lot is greater than X, you can have a." You can go fifty percent of your lot.
Don: The ordinance already entertains that with the allowance of two driveways. So, if you have a really wide lot and you can meet that driveway spacing, you can do two driveways.
Jett: But when you have, you get around quite a bit there's several three car garages, almost standard out there, and then a lot of people have the R V garages out there. They need a forty-foot-wide driveway
Randall: But do they need it at the entrance from the road?
Jett: Because you go garage, garage, garage, and then their RV garage. They can't turn. With RVs, it's pretty difficult.
Randall: Turn on the other ones. As I say, straight shot for the RV and curve for your last one. What Kent was showing you for 4B. That's what they did all over the place.
Jett: I did it and they did that because we have an ordinance, and they're saying, look, your ordinance does not work, so we're going to get around it by doing what we're doing. You ask ninety-five percent of those people out there, if your driveway could have been ten feet larger, would you have gone with that? Or would you have done the S turn or the widening that? And I'd give you a hundred dollars to your ten dollars, that says ninety percent of the people say, I'd rather have added ten feet to my driveway.
Burgess: On the Tooele one, was there thirty-six or thirty three percent? Like whichever is less. Cause, to me, I feel like it's a proportion thing, at least aesthetically. There is the other reasons you said, but I definitely think there is a lot of people who don't like 10 cars parked on the concrete in front of everybody's houses, but I also think, if you have a hundred and fifty two hundred feet of frontage, then fifty doesn't look weird or odd. I just measured my frontage while we were sitting here. I had no idea what mine was. I have two twenty-four-foot driveways and two hundred and four feet. I am on an estate lot, like what we're talking about, and that's twenty-four percent. Even if you total both of them, it doesn't look weird, and the whole street is pretty much that same way. I understand the reason for not wanting just fifty across the board because you start throwing these smaller frontages, RE lots on there. All of a sudden, you are looking at fifty percent or more of the frontage. But I do think there ought to be some kind of way if there's a lot to have a section to me, it makes more sense the long way to getting here to have a percentage, then just a flat.
Jett: You and I are pretty much online with our thoughts coming up with some kind of formula. Thirty-four feet, but it could be greater if your lot is greater.
Burgess: That's my thought. Like my initial thought when I saw Tooele's was every lot gets thirty four, but if you can have up to thirty five percent of the frontage, but just because there is some of these that has a maximum because there is some of these that are just really, really large,

but as of right now, you could do two thirty four foots if it was large, so it's kind of moot there too.
Don: You'd have to meet your driveway separation. Right, you would have but if you had enough frontage, you could get enough frontage to do so. Yeah
Webster: What's the residence in question, how wide is theirs?
Kent: I think it's about forty- five.
Burgess: Do you know what their frontage is?
Kent: I did measure that it was a little over a hundred, like one hundred and five
Don: Was there any issue specifically to the RE zone as far as drainage? And the borrow ditches?
Kent: The other thing that we do have there where we don't have curb and gutter in that 4B Ranch, although we do have some RE development that the Levitz are doing, that does have curb and gutter. But where that does not have the curb and gutter, The only way to get the water off, the street is to let it flow into the borrow ditch. And when you have driveways, that's a location it can't flow into the borrow ditch because it's piped under the driveway, right? Well, the higher the percentage of frontage that's driveways, the less we have the ability to get the water where it needs to go, so that there is that drainage consideration with the borrow ditches in the RE zone,
Jett: So, Randall, I'm always trying to think out of the box, I don't know how customized we can make this, so if we widened, you've been up to this home?
Kent: Yes, I have
Jett: If we widened it the 44 feet, I think you said is what they're looking for?
Kent: They're looking for 50. Their request is that the ordinance be changed to allow for 50-foot driveways.
Jett: If we widened it the 50 foot is that going to create a problem with the borrow ditches and so forth?
Kent: It certainly reduces where the water can get into the borrow ditch, yeah.
Jett: I get what you're saying your hardscaping.
Wayne: I'm thinking of my friend that has three miles of frontage, that's neither here nor there, could we phrase this something like 34 feet or 30% of the frontage not to exceed 50 feet? They still wouldn't be able to put 50 feet in out there because I think if you have 300 feet of frontage, I don't think 50-foot driveway is unreasonable, but in most subdivisions, I think it is unreasonable. But if you word it 34% Maximum or 33% of the frontage not to exceed 50 ft. Something like that might work.
Burgess: I like that
Randall: You can do that, I will note one thing just for you and this is different preferences, different council members as well. We have at least one council member that does get frustrated if we actually move something forward if the applicant is not present. You don't have to follow through with that because that was just one council member and they still voted even when he said that.
Don: We don't necessarily send a notice to the applicant.
Randall: Just FYI
Don: I am mistaken Amber is telling me that I am wrong and that we did.
Randall: So that's just FYI, it's not a statute requirement or an ordinance requirement that they have to be present, but we do have a council member that has repeatedly and loudly that when staff or boards carry the water for the applicants and the applicants aren't here to push it.

Burgess: I don't like it but I'm not going to have it taint what I think's the right decision on a change either.
Randall: And that's how a lot of the other council members have taken it as well. So, I just figured I'd give you a heads up on that.
Webster: Well, I
Randall: You could table it as well
Webster: Well, I like what you said and could buy into that, and all it did is bring to the surface a need to look at something. In this particular case last night at the board of adjustments, we heard a case where we were like, well the guy should have known. Because that is part of his deal when he builds or his builders deal. To change our rules for one house in all the city for that.
Burgess: I don't want to change this because somebody built it against the code and to save them from it. But I also think it's a reasonable change to make going forward.
Jett: Do we have a public hearing?

Public Hearing Opened

Ann Clark: Kent, I will say this I am glad to see that we are caring about how the neighborhood looks and how it affects everybody in the neighborhood. Because sometimes we say hey be a good neighbor but really that means you're a good neighbor if you let me do whatever I want. So, I do really appreciate that. I mean if they have a really big frontage then maybe we could do a percentage. So, when you look at it proportionally it still really looks the same. You know what I mean?
Jett: Don? You made a pretty compassionate argument.
Don: Those were ideas that were rattling around in my head as well.
Webster: Share your name
Lester: Lester Ross, if we're changing this, we need to clarify where we are changing from because how it's being interpreted and how it's being enforced
Jett: So, you're talking on top of apron
Lester: So right now, we measure driveways at the bottom of the curb cut. That is how the building department measures
Kent: Which is not how our standard drawing is written. It's written at the width of the driveway at the right of way line and that's how it should be measured.
Lester: Yeah, so we need that clarified that we're talking at the right of way line.
Jett: So that's the top of the slope.
Lester: Yeah, top of the slope
Webster: Thanks Lester. Any other comments, we'll close the public hearing then.

Public Hearing Closed

Randall: Can I add something, so I think Tom kind of already hit on this and it may be part of the goal you have in mind. Just always understand the interplay of what we do with other laws. So, for example, under Utah law you cannot park blocking a driveway. Technically even if it's your own, that's stat law. It doesn't care you're not allowed to block it primarily because that's an access point. So, if you do allow too much of a driveway, you are also decreasing the amount of available space for parking on the street that is in fact owned by the public. Now, again, if your goal is to stop people from parking in front of your house, this will help with that. If on the other

hand you get frustrated when you have friends and relatives coming over and this is shared space. You're not likely to have the same parties at the same time as your neighbors. You're giving that up. Neither one is right or wrong. Just know that is an interplay that you will be changing. On how parking is allowed.
Webster: Does anybody have a thought about a motion?
Wayne: I'll give a shot, I would move that we change the wording to keeping 34 feet maximum or 33% of the frontage, not to exceed 50 feet.
Randall: Now can I clarify because what's been proposed is only in the RE zone.
Jett: No, I propose for all zones
Randall: Unfortunately, that's all we've advertised. So, I just wanted you to know that if we want to push it further than that, we'll need to readvertise.
Jett: Could we put this on the agenda?
Burgess: I feel like there's not a lot of non RE zones that are going to get changed by this either.
Randall: Well, and there's a bigger impact on curb and gutter and so it probably would be a longer conversation, to know how that's going to impact water carrying capacity and stuff especially with the new standards.
Jett: Could I get you to put this on the planning commission next time to talk about all zones?
Don: I'd have to get it out by Friday.
Jett: It could be in a couple weeks from now Don. It doesn't have to be coming up immediately.
Randall: And then your question is too if you want to address multiple zones, do you want this going to the council piece meal or together?
Jett: Together? I mean we're not going to make a difference on this one situation that brought this up.
Webster: Although you can, if we just do it in the RE at least, it's like we see what you're asking for and here is an address.
Burgess: I'd almost rather do them separately because A. I think it's a different conversation because of the curb and gutter and I don't think there's very many lots in R1 that this would change anything with.
Wayne: This does shoot down the request though, doesn't it?
Burgess: It does, 33 still not 45, right?
Don: How wide was that lot again, Kent?
Kent: I don't remember exactly but I believe it was between 100 and 110
Don: So that would not get them 50 feet in this case.
Wayne: I'll keep my motion
Jett: Second
Webster: Okay, Wayne's given us a motion and now confined it to the RE. We have a second with Tom, All in favor?
Webster: Any opposed? And the motion carries. That covers four and five.

Wayne motions to change the wording to keep 34 feet maximum or 33% of the frontage, not to exceed 50 feet. Jett seconds; all in favor for a unanimous vote.

CEDAR CITY
CITY COUNCIL AGENDA ITEM 5
STAFF INFORMATION SHEET

To: Mayor and City Council

From: Jonathan Stathis

Council Meeting Date: May 20, 2026

Subject: **Public hearing to consider an ordinance modifying Engineering Standards Section 5 regarding driveway requirements and curb & gutter requirements.**

Discussion: A proposal has been brought to the City to change the maximum driveway width in the Residential Estates (RE) zone. Currently, City engineering standards limit the width of all residential driveways to a maximum width of 34 feet. The proposed ordinance would change the maximum driveway width to 50 feet for properties in the Residential Estates (RE) Zone. Information regarding the proposed driveway width changes is included in the Information Sheet for the previous item.

Also, proposed changes to the engineering standards regarding driveways and curb & gutter are being proposed. Please refer to the attached information.

The proposed engineering standard changes are included as an attachment to this Information Sheet. Also, a copy of the Planning Commission minutes are included with this Information Sheet.

Please consider whether to approve or disapprove the proposed engineering standards changes. Thank you for your consideration.

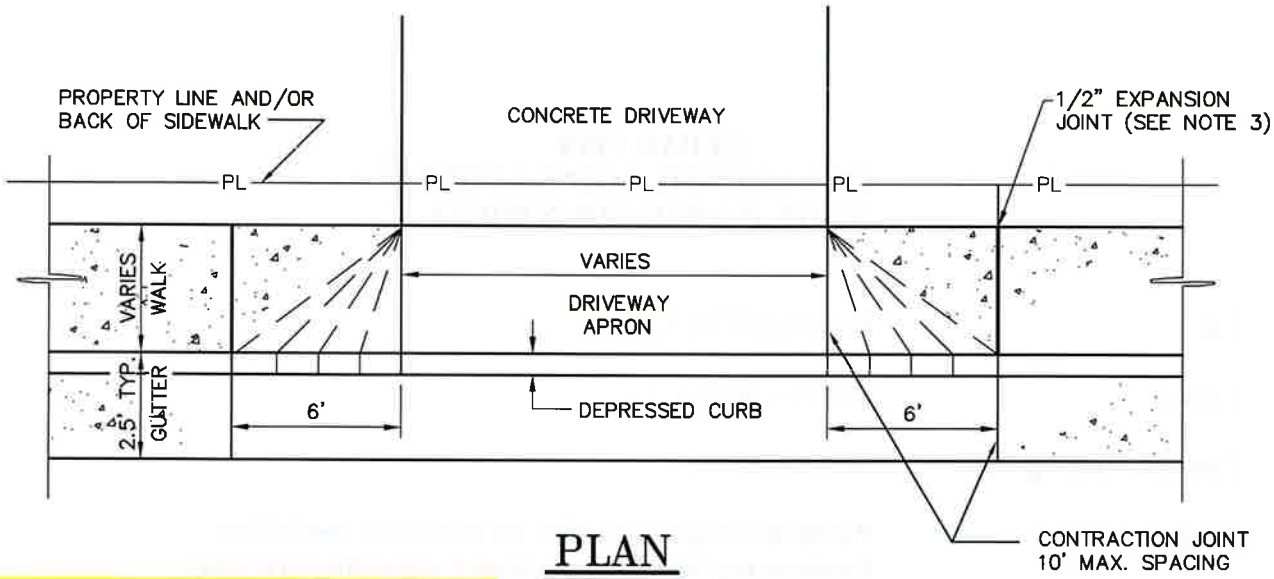

PLAN

N.T.S.

For RE subdivisions with no curb and Gutter, change Residential max to 50'

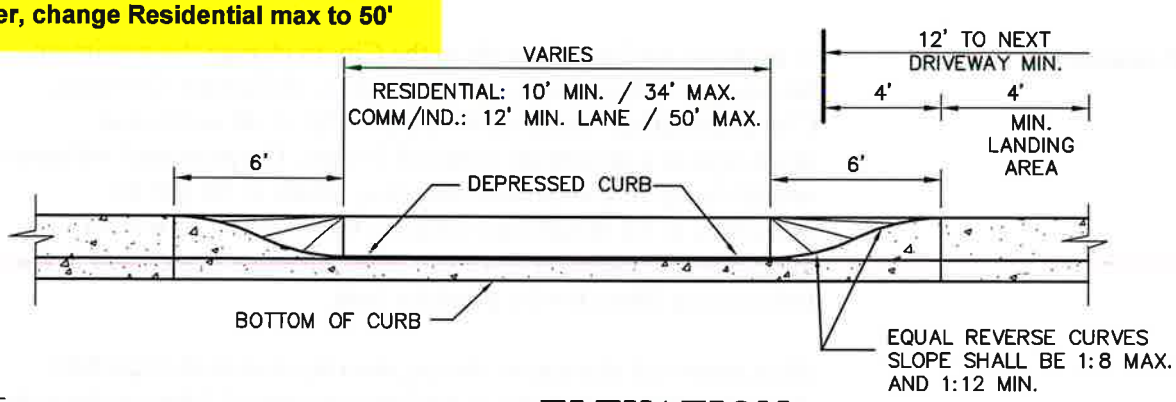

ELEVATION

N.T.S.

NOTES:

1. #4 BARS @ 16" O.C. BOTH WAYS REQ'D.
2. DRIVEWAY CUTS IN EXISTING CURBS SHALL BE SAW CUT TO DIMENSIONS SHOWN, BREAKING-OFF OF CURB BACKS WILL NOT BE PERMITTED.
3. 40' EXPANSION JOINT SPACING IN SIDEWALKS TO CONTINUE THROUGH DRIVEWAYS.
4. ALL CONCRETE TO BE CLASS B (4000 PSI).
5. SIDEWALKS AT DRIVEWAY APPROACHES BEHIND A TYPE D LOW PROFILE CURB MUST BE 6" THICK (REINFORCED WITH #4 BARS @ 16" O.C. BOTH WAYS).

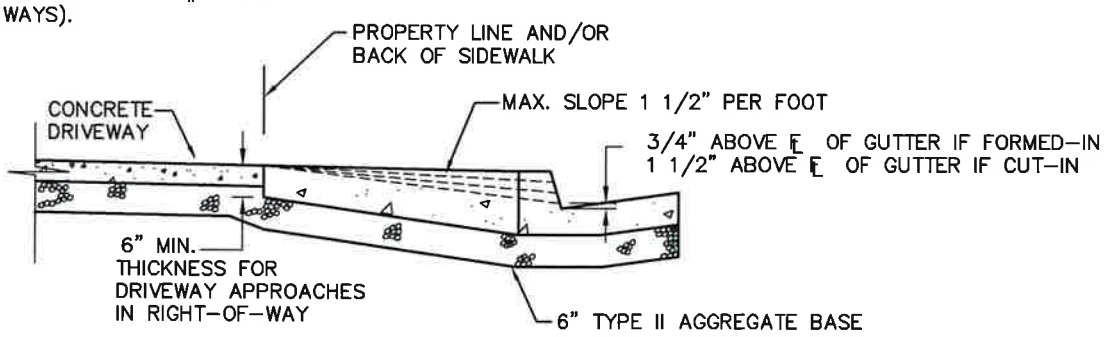

SECTION

N.T.S.

SHEET NO.		REVISIONS				
C3	DRIVEWAYS	DATE	DESCRIPTION	BY	CEDAR CITY	SCALE: N.T.S. / DATE: 7/2021
FILE: C03		7/2021	CLARIFIED DRIVEWAY WIDTHS, UPDATED NOTES	J.A.S.	10 NORTH MAIN STREET CEDAR CITY, UTAH 84720 PH. (435) 586-2963	DRAWN: T.B.M. / CHECKED: J.A.S.

SECTION 5 STANDARD DETAILS

Concrete Details – C1 Curb & Gutter: Additional notes added. Use Utah APWA Standard Plan 205 Type A Curb and Gutter – 30". City Engineer approval required for use of Type A – 24", Type B, Type H, Type HB30-7 Curb and Gutter, or any curb types on Standard Detail Sheets C1 and C1A.

Concrete Details – C3 Driveways: Details and notes deleted. New notes added. Use Utah APWA Standard Plans 215 and 221, and 222. City Engineer approval required for use of Standard Plans 216, 225, and 229.

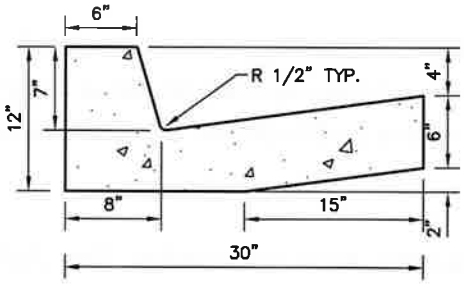

30" CURB & GUTTER

0.57 YD.^{3}/10 LINEAR FT.

TYPE A

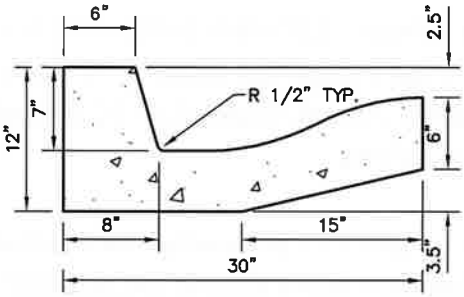

30" IRRIGATION C&G

0.57 YD.^{3}/10 LINEAR FT.

TYPE B

NOTE:

1. USE UTAH APWA STANDARD PLAN 205 TYPE A CURB AND GUTTER - 30".
2. CITY ENGINEER APPROVAL REQUIRED FOR USE OF TYPE A - 24", TYPE B, TYPE H, TYPE HB30-7 CURB AND GUTTER, OR ANY CURB TYPES ON STANDARD DETAIL SHEETS C1 AND C1A.
3. ALL CURB AND GUTTER TYPES SHALL HAVE:
4. CONTRACTION JOINTS EVERY 10' O.C. 1/2" DEEP.
5. EXPANSION JOINTS AT THE P.C. AND P.T. OF A STREET INTERSECTION CURB RADIUS RETURN.

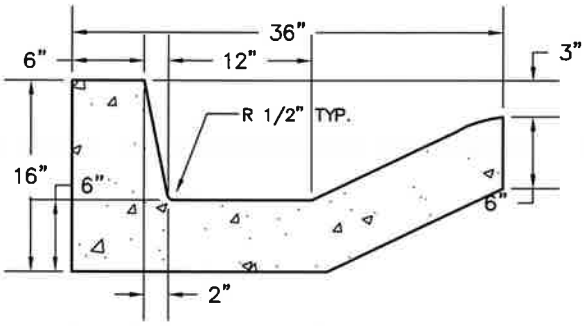

36" CURB & GUTTER

0.81 YD.^{3}/10 LINEAR FT.

TYPE C

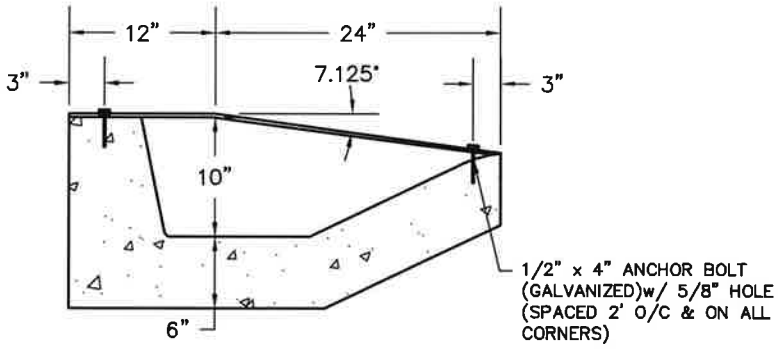

COVERED DRIVE OR SIDEWALK ACCESS RAMP*

USING 1/2" LARGE PATTERN INLAND 4-WAY PLATE (GALVANIZED PAINTED OR HOT DIPPED) LENGTHS TO BE SAME AS DRIVEWAY OR SIDEWALK WIDTHS

* USE ONLY WHEN APPROVED BY THE CITY ENGINEER.

SHEET NO.	CURB & GUTTER	REVISIONS	CEDAR CITY	SCALE:	DATE:
C1		DATE / DESCRIPTION / BY	10 NORTH MAIN STREET CEDAR CITY, UTAH 84720 PH. (435) 586-2963	N.T.S.	4/2026
FILE: C01				DRAWN: T.B.M.	CHECKED: K.F.

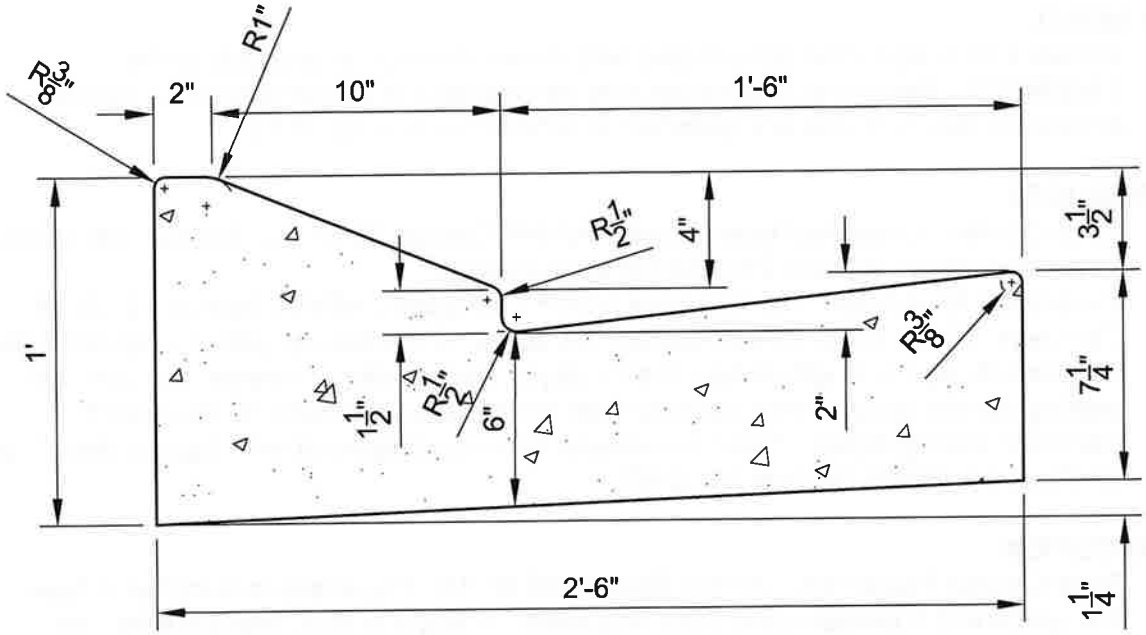

LOW PROFILE
30" CURB & GUTTER
TYPE D

N.T.S.

NOTES:

1. USE UTAH APWA STANDARD PLAN 205 TYPE A CURB AND GUTTER - 30".
2. CITY ENGINEER APPROVAL REQUIRED FOR USE OF TYPE A - 24", TYPE B, TYPE H, TYPE HB30-7 CURB AND GUTTER, OR ANY CURB TYPES ON STANDARD DETAIL SHEETS C1 AND C1A.
3. TYPE D CURB AND GUTTER WILL BE CONSIDERED AS AN OPTION ONLY ON LOCAL (45' R.O.W.) STREETS IN THE R-1, R-2-1, R-2-2, & R-3-1 RESIDENTIAL ZONES.
4. WHERE SIDEWALKS CROSS DRIVEWAY APPROACHES BEHIND A TYPE D CURB & GUTTER, MINIMUM SIDEWALK THICKNESS SHALL BE 6" THICK REINFORCED WITH #4 BARS @ 16" O.C. BOTH WAYS. SIDEWALKS IN OTHER AREAS SHALL BE A MINIMUM OF 4" THICK..

NOTE:

ALL CURB AND GUTTER TYPES SHALL HAVE:

1. CONSTRUCTION JOINTS EVERY 10' O.C. 1/2" DEEP.
2. EXPANSION JOINTS AT THE P.C. AND P.T. OF A STREET INTERSECTION CURB RADIUS RETURN.

SHEET NO.		REVISIONS				
C1A	LOW PROFILE CURB & GUTTER (TYPE D)	DATE	DESCRIPTION	BY	CEDAR CITY 10 NORTH MAIN STREET CEDAR CITY, UTAH 84720 PH. (435) 586-2963	SCALE: N.T.S. / DATE: 4/2026
FILE: C01A		7/2021	DETAIL C1A ADDED TO STANDARDS	J.A.S.		DRAWN: T.B.M. / CHECKED: K.F.

Curb and gutter

1. **GENERAL**
   A. Variance from specified dimensions and slopes must be acceptable to the ENGINEER. System configuration may be changed at ENGINEER's discretion.
   B. Additional requirements are specified in APWA Section 32 16 13.

2. **PRODUCTS**
   A. Base Course: Untreated base course, APWA Section 32 11 23. Do not use gravel as a base course without ENGINEER's permission.
   B. Expansion Joint Filler: 1/2-inch thick type F1 full depth, APWA Section 32 13 73.
   C. Concrete: Class 4000, APWA Section 03 30 04. If necessary, provide concrete that achieves design strength in less than 7 days. Use caution; however, as concrete crazing (spider cracks) may develop if air temperature exceeds 90 degrees F.
   D. Concrete Curing Agent: Clear membrane forming compound with fugitive dye (Type ID Class A), APWA Section 03 39 00.

3. **EXECUTION**
   A. Base Course Placement: APWA Section 32 05 10. Thickness is 6-inches if flow-line grade is 0.5 percent (s=0.005) or greater. If slope is less, provide 8-inches. Maximum lift thickness before compaction is 8-inches when using riding equipment or 6-inches when using hand held equipment. Compaction is 95 percent or greater relative to a modified proctor density, APWA Section 31 23 26.
   B. Concrete Placement: APWA Section 03 30 10.
      1) Install expansion joints vertical, full depth, with top of filler set flush with concrete surface. Install at the start or end of a street intersection curb return. Expansion joints are not required in concrete placement using slip-form construction.
      2) Install contraction joints vertical, 1/8-inch wide or 1/4 slab thickness if the slab is greater than 8-inches thick. Match joint location in adjacent Portland-cement concrete roadway pavement.
      3) Provide 1/2-inch radius edges. Apply a broom finish. Apply a curing agent.
   C. Protection and Repair: Protect concrete from deicing chemicals during cure. Repair construction that does not drain. If necessary, fill flow-line with water to verify.

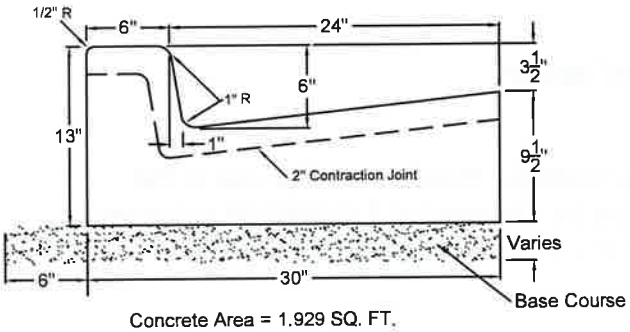

Concrete Area = 1.929 SQ. FT.
Cubic Yard per Foot = 0.0714

Type A - 30" Standard

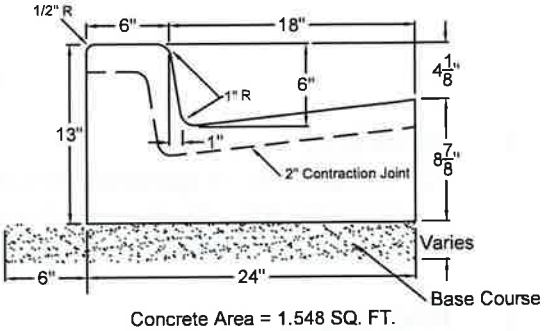

Concrete Area = 1.548 SQ. FT.
Cubic Yard per Foot = 0.057

Type A - 24" Standard

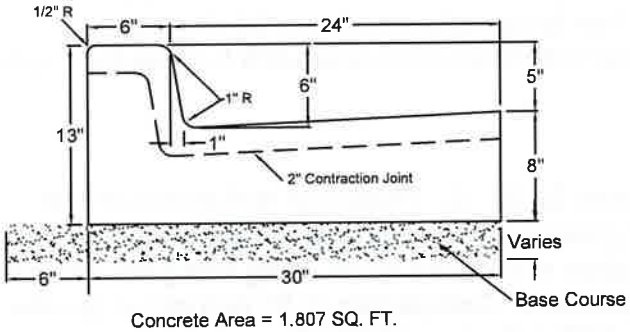

Concrete Area = 1.807 SQ. FT.
Cubic Yard per Foot = 0.0670

Type A - 30" ADA Access

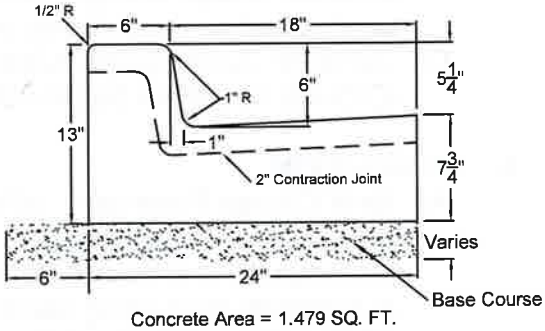

Concrete Area = 1.479 SQ. FT.
Cubic Yard per Foot = 0.0548

Type A - 24" ADA Access

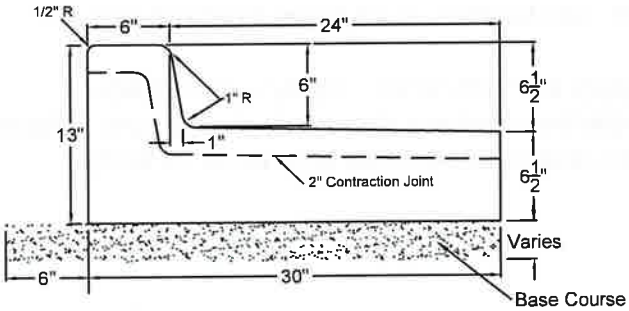

Concrete Area = 1.689 SQ. FT.
Cubic Yard per Foot = 0.0626

Type A - 30" Reverse Pan

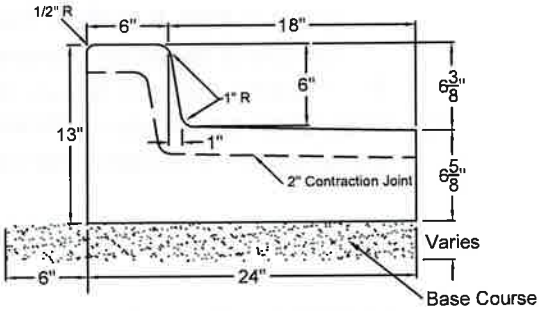

Concrete Area = 1.415 SQ. FT.
Cubic Yard per Foot = 0.0524

Type A - 24" Reverse Pan

Backfill Behind Curb Before
Paving Against Lip of Gutter

AMERICAN PUBLIC WORKS ASSOCIATION

Type A Curb and Gutter

Plan
205.1

Revised January 2025

Curb and gutter

1. **GENERAL**
   A. Variance from specified dimensions and slopes must be acceptable to the ENGINEER. System configuration may be changed at ENGINEER's discretion.
   B. Additional requirements are specified in APWA Section 32 16 13.

2. **PRODUCTS**
   A. Base Course: Untreated base course, APWA Section 32 11 23. Do not use gravel as a base course without ENGINEER's permission.
   B. Expansion Joint Filler: 1/2-inch thick type F1 full depth, APWA Section 32 13 73.
   C. Concrete: Class 4000, APWA Section 03 30 04. If necessary, provide concrete that achieves design strength in less than 7 days. Use caution; however, as concrete crazing (spider cracks) may develop if air temperature exceeds 90 degrees F.
   D. Concrete Curing Agent: Clear membrane forming compound with fugitive dye (Type ID Class A), APWA Section 03 39 00.

3. **EXECUTION**
   A. Base Course Placement: APWA Section 32 05 10. Thickness is 6-inches if flow-line grade is 0.5 percent (s=0.005) or greater. If slope is less, provide 8-inches. Maximum lift thickness before compaction is 8-inches when using riding equipment or 6-inches when using hand held equipment. Compaction is 95 percent or greater relative to a modified proctor density, APWA Section 31 23 26.
   B. Concrete Placement: APWA Section 03 30 10.
      1) Install expansion joints vertical, full depth, with top of filler set flush with concrete surface. Install at the start or end of a street intersection curb return. Expansion joints are not required in concrete placement using slip-form construction.
      2) Install contraction joints vertical, 1/8-inch wide or 1/4 slab thickness if the slab is greater than 8-inches thick. Match joint location in adjacent Portland-cement concrete roadway pavement.
      3) Provide 1/2-inch radius edges. Apply a broom finish. Apply a curing agent.
   C. Protection and Repair: Protect concrete from deicing chemicals during cure. Repair construction that does not drain. If necessary, fill flow-line with water to verify.

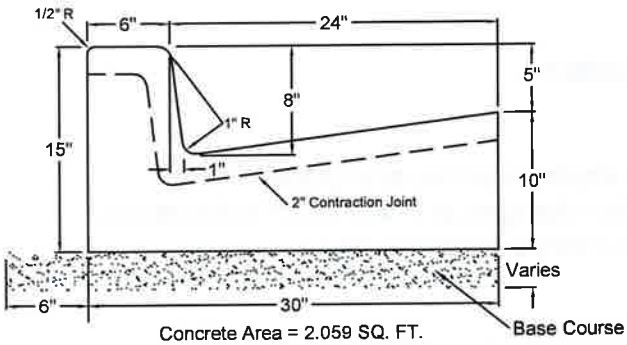

Concrete Area = 2.059 SQ. FT.
Cubic Yard per Foot = 0.0763

Type B - 30" Standard

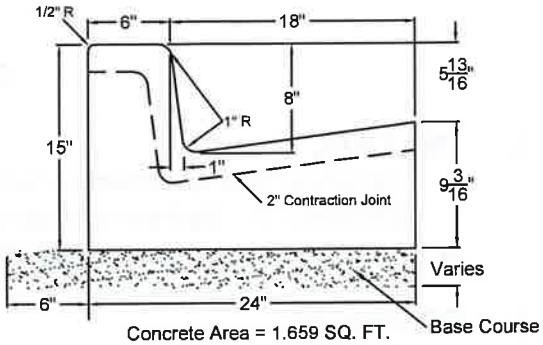

Concrete Area = 1.659 SQ. FT.
Cubic Yard per Foot = 0.0614

Type B - 24" Standard

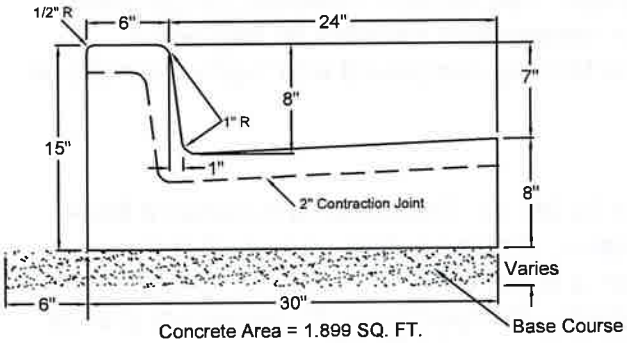

Concrete Area = 1.899 SQ. FT.
Cubic Yard per Foot = 0.0803

Type B - 30" ADA Access

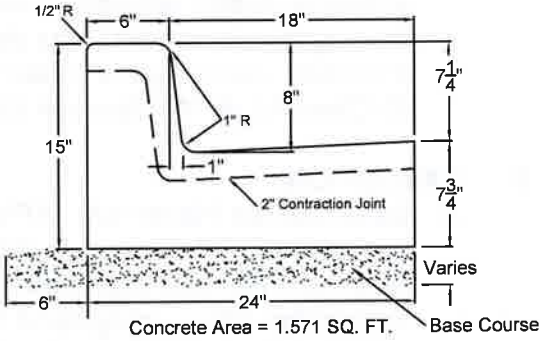

Concrete Area = 1.571 SQ. FT.
Cubic Yard per Foot = 0.0582

Type B - 24" ADA Access

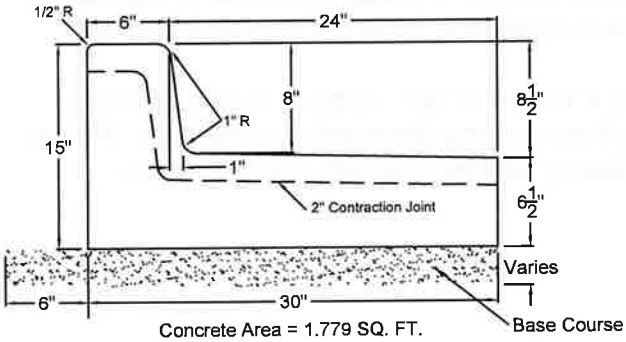

Concrete Area = 1.779 SQ. FT.
Cubic Yard per Foot = 0.0659

Type B - 30" Reverse Pan

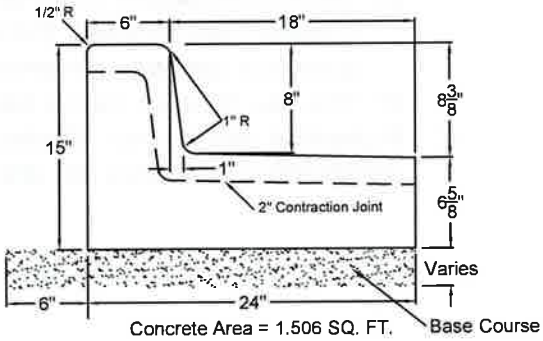

Concrete Area = 1.506 SQ. FT.
Cubic Yard per Foot = 0.0558

Type B - 24" Reverse Pan

Backfill Behind Curb Before
Paving Against Lip of Gutter

AMERICAN PUBLIC WORKS ASSOCIATION

Type B Curb and Gutter

Plan

205.2

Revised January 2025

Curb and gutter

1. **GENERAL**
   A. Variance from specified dimensions and slopes must be acceptable to the ENGINEER. System configuration may be changed at ENGINEER's discretion.
   B. Additional requirements are specified in APWA Section 32 16 13.

2. **PRODUCTS**
   A. Base Course: Untreated base course, APWA Section 32 11 23. Do not use gravel as a base course without ENGINEER's permission.
   B. Expansion Joint Filler: 1/2-inch thick type F1 full depth, APWA Section 32 13 73.
   C. Concrete: Class 4000, APWA Section 03 30 04. If necessary, provide concrete that achieves design strength in less than 7 days. Use caution; however, as concrete crazing (spider cracks) may develop if air temperature exceeds 90 degrees F.
   D. Concrete Curing Agent: Clear membrane forming compound with fugitive dye (Type ID Class A), APWA Section 03 39 00.

3. **EXECUTION**
   A. Base Course Placement: APWA Section 32 05 10. Thickness is 6-inches if flow-line grade is 0.5 percent (s=0.005) or greater. If slope is less, provide 8-inches. Maximum lift thickness before compaction is 8-inches when using riding equipment or 6-inches when using hand held equipment. Compaction is 95 percent or greater relative to a modified proctor density, APWA Section 31 23 26.
   B. Concrete Placement: APWA Section 03 30 10.
      1) Install expansion joints vertical, full depth, with top of filler set flush with concrete surface. Install at the start or end of a street intersection curb return. Expansion joints are not required in concrete placement using slip-form construction.
      2) Install contraction joints vertical, 1/8-inch wide or 1/4 slab thickness if the slab is greater than 8-inches thick. Match joint location in adjacent Portland-cement concrete roadway pavement.
      3) Provide 1/2-inch radius edges. Apply a broom finish. Apply a curing agent.
   C. Protection and Repair: Protect concrete from deicing chemicals during cure. Repair construction that does not drain. If necessary, fill flow-line with water to verify.

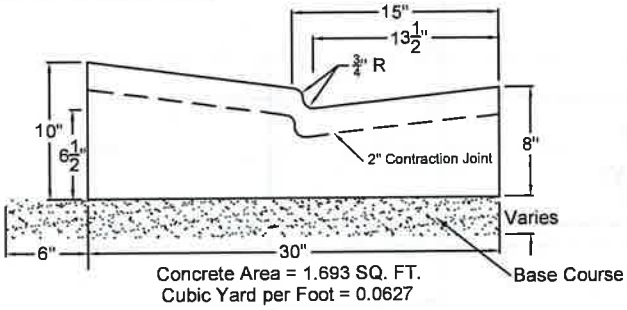

Type H - 30" Standard

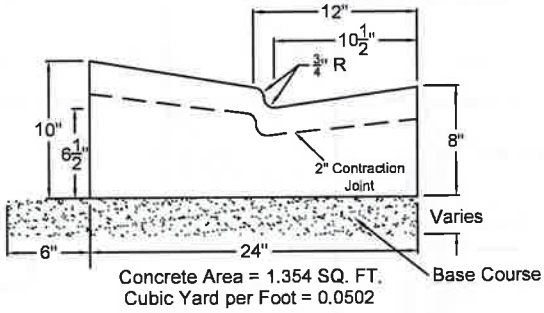

Type H - 24" Standard

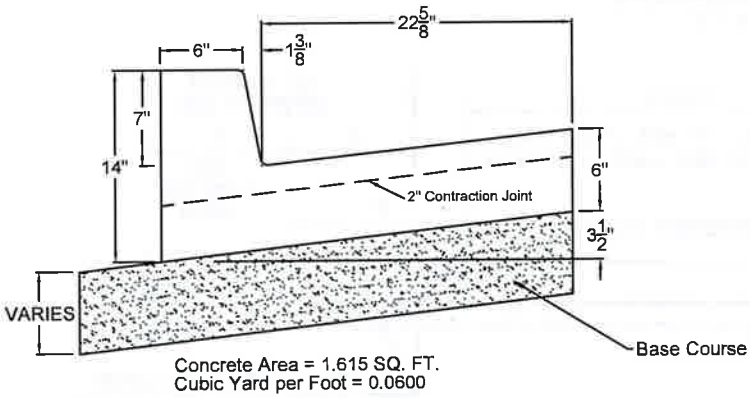

Type HB30-7

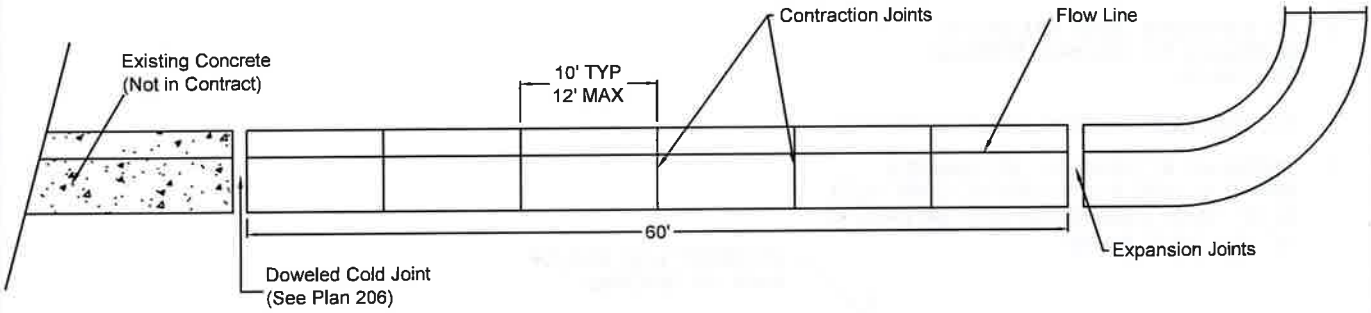

Backfill Behind Curb Before
Paving Against Lip of Gutter

AMERICAN PUBLIC WORKS ASSOCIATION

Type H Curb and Gutter

Plan

205.3

Revised January 2025

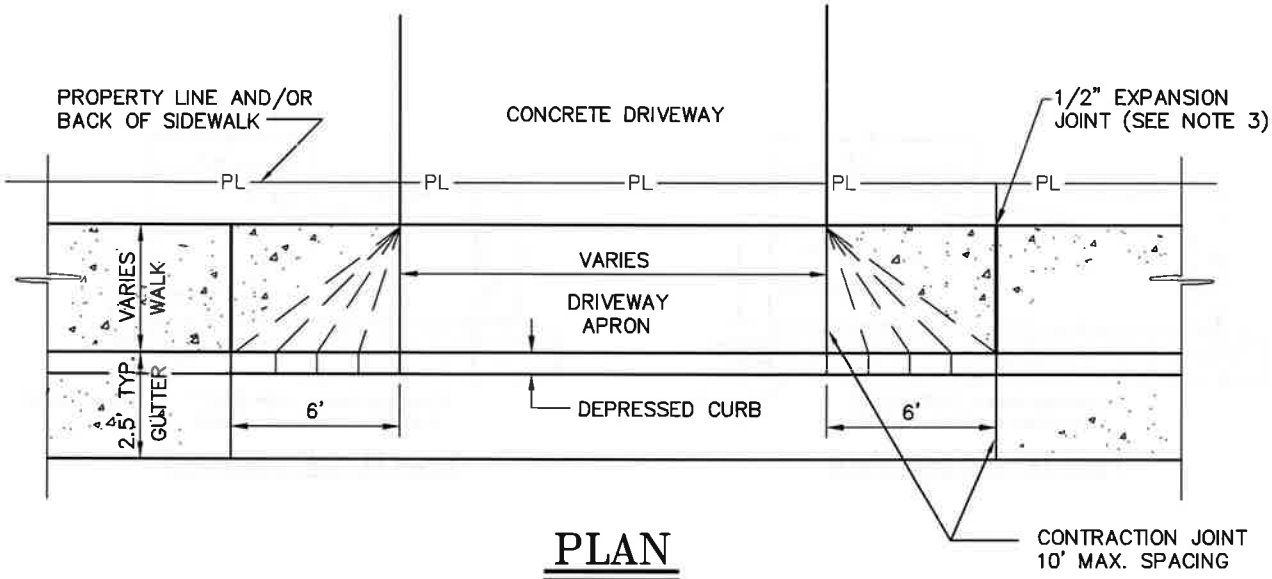

PLAN

N.T.S.

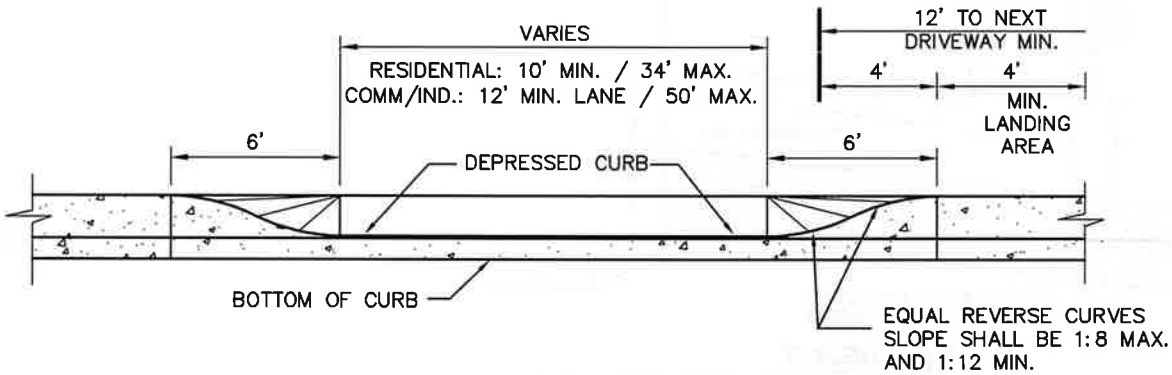

ELEVATION

N.T.S.

NOTES:

1. #4 BARS @ 16" O.C. BOTH WAYS REQ'D.
2. DRIVEWAY CUTS IN EXISTING CURBS SHALL BE SAW CUT TO DIMENSIONS SHOWN, BREAKING-OFF OF CURB BACKS WILL NOT BE PERMITTED.
3. 40' EXPANSION JOINT SPACING IN SIDEWALKS TO CONTINUE THROUGH DRIVEWAYS.
4. ALL CONCRETE TO BE CLASS B (4000 PSI).
5. SIDEWALKS AT DRIVEWAY APPROACHES BEHIND A TYPE D LOW PROFILE CURB MUST BE 6" THICK (REINFORCED WITH #4 BARS @ 16" O.C. BOTH WAYS).

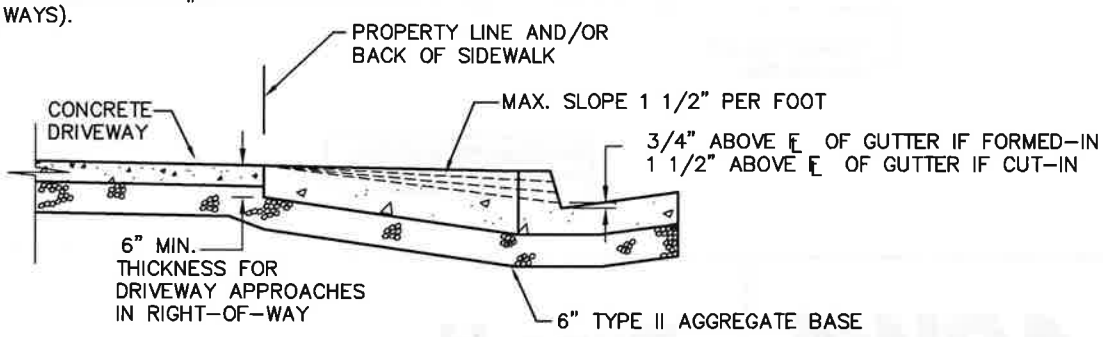

SECTION

N.T.S.

SHEET NO.		REVISIONS				
C3	DRIVEWAYS	DATE	DESCRIPTION	BY	CEDAR CITY	SCALE: N.T.S.	DATE: 7/2021
FILE: C03		7/2021	CLARIFIED DRIVEWAY WIDTHS, UPDATED NOTES	J.A.S.	10 NORTH MAIN STREET CEDAR CITY, UTAH 84720 PH. (435) 586-2963	DRAWN: T.B.M.	CHECKED: J.A.S.

Notes:

1. Use Utah APWA Standard Plans 215, 221, and 222.
2. City Engineer approval required for use of Standard Plans 216, 225, and 229.

SHEET NO.		REVISIONS		
C3	DRIVEWAYS	DATE	DESCRIPTION	BY
FILE: C03		7/2021	CLARIFIED DRIVEWAY WIDTHS, UPDATED NOTES	J.A.S.

CEDAR CITY
10 NORTH MAIN STREET
CEDAR CITY, UTAH 84720
PH. (435) 586-2963

SCALE:	DATE:
N.T.S.	4/2026
DRAWN: T.B.M.	CHECKED: K.F.

Dip driveway approach

1. **GENERAL**
   A. Variance from specified dimensions and slopes must be acceptable to the ENGINEER. System configuration may be changed at ENGINEER's discretion.
   B. Additional requirements are specified in APWA Section 32 16 13.

2. **PRODUCTS**
   A. Base Course: Untreated base course, APWA Section 32 11 23. Do not use gravel as a base course without ENGINEER's permission.
   B. Expansion Joint Filler: 1/2-inch thick type F1 full depth, APWA Section 32 13 73..
   C. Concrete: Class 4000, APWA Section 03 30 04. If necessary, provide concrete that achieves design strength in less than 7 days. Use caution; however, as concrete crazing (spider cracks) may develop if air temperature exceeds 90 degrees F.
   D. Reinforcement: Galvanized or epoxy coated, deformed, 60 ksi yield grade steel, ASTM A615.
   E. Concrete Curing Agent: Clear membrane forming compound with fugitive dye (Type ID Class A), APWA Section 03 39 00.

3. **EXECUTION**
   A. Base Course Placement: APWA Section 32 05 10. Maximum lift thickness before compaction is 8-inches when using riding equipment or 6-inches when using hand held equipment. Compaction is 95 percent or greater relative to a modified proctor density, APWA Section 31 23 26.
   B. Concrete Placement: APWA Section 03 30 10.
      1) Install expansion joints vertical, full depth, with top of filler set flush with concrete surface.
      2) Install contraction joints vertical, 1/8-inch wide or 1/4 slab thickness if the slab is greater than 8-inches thick. Maximum length to width ratio for non-square panels is 1.5 to 1. Maximum panel length (in feet) is 1.5 times the slab thickness (in inches).
      3) Provide 1/2-inch radius edges. Apply a broom finish. Apply a curing agent.
   C. Protection and Repair. Protect concrete from deicing chemicals during cure. Repair construction that does not drain. If necessary, fill flow-line with water to verify.

STREET TYPE	LENGTH (Y)	LENGTH (T)
RESIDENTIAL	24"	6"
OTHER	36"	8"

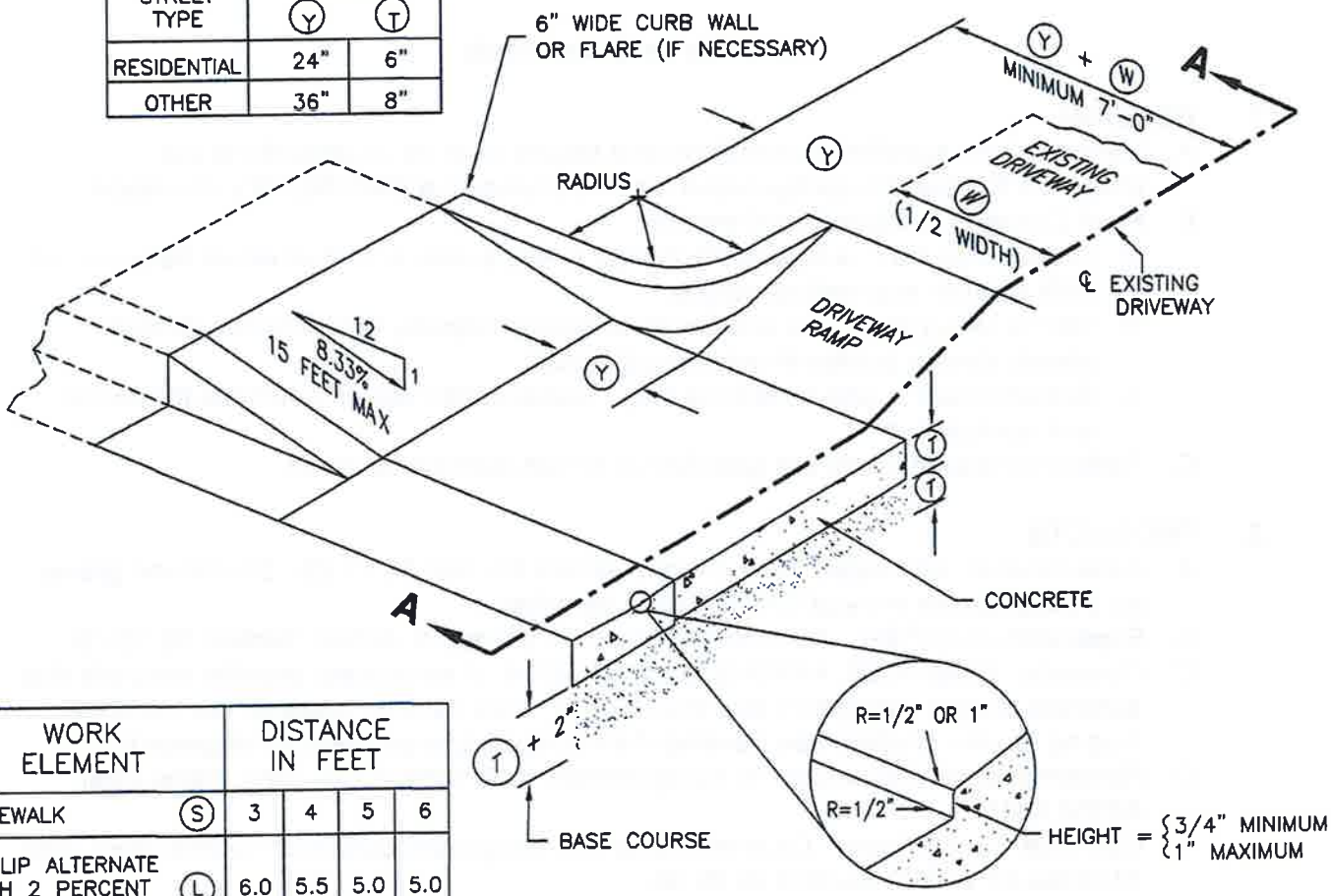

LIP ALTERNATE

WORK ELEMENT		DISTANCE IN FEET			
SIDEWALK	(S)	3	4	5	6
1" LIP ALTERNATE WITH 2 PERCENT SIDEWALK SLOPE	(L)	6.0	5.5	5.0	5.0
NO LIP DRIVEWAY WITH 2 PERCENT SIDEWALK SLOPE	(L)	7.0	7.0	6.5	6.0

OBLIQUE

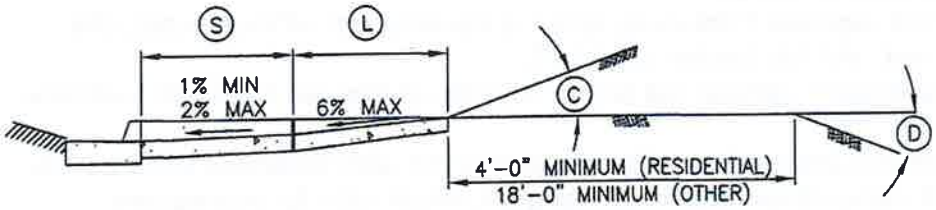

STREET TYPE	BREAK OVER ANGLE (MAXIMUM) (C)	BREAK OVER ANGLE (MAXIMUM) (D)
RESIDENTIAL	16%	6%
OTHER	6%	2%

SECTION A-A - APPROACH REQUIRING SERVICE TRUCK ACCESS

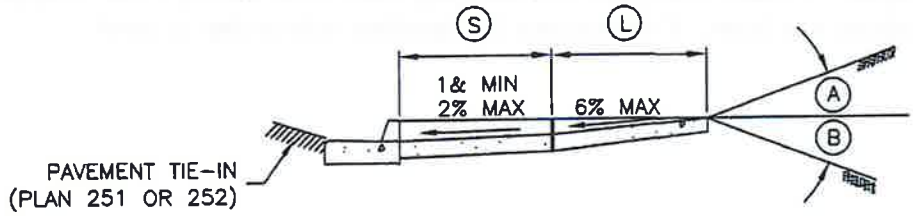

STREET TYPE	BREAK OVER ANGLE (MAXIMUM) (A)	BREAK OVER ANGLE (MAXIMUM) (B)
RESIDENTIAL	16%	12%
OTHER	6%	8%

SECTION A-A - TYPICAL DRIVEWAY APPROACH

AMERICAN PUBLIC WORKS ASSOCIATION
APWA
Utah Chapter

Dip driveway approach

Plan
215
December 2009

Flare driveway approach

1. **GENERAL**
   A. Variance from specified dimensions and slopes must be acceptable to the ENGINEER. System configuration may be changed at ENGINEER's discretion.
   B. Field Changes to Slope Requirements:
      1) Grades may have a 6 percent change in slope over a 11 feet wheel base run for both crest or sag vertical curves.
      2) Where heavy truck use and fire truck access applies, or to improve design speed, design grades should be cut in half.
      3) Specific uses or site conditions may require profile design submittal for review and acceptance.
   C. Additional requirements are specified in APWA Section 32 16 13..

2. **PRODUCTS**
   A. Base Course: Untreated base course, APWA Section 32 11 23. Do not use gravel as a base course without ENGINEER's permission.
   B. Expansion Joint Filler: 1/2-inch thick type F1 full depth, APWA Section 32 13 73..
   C. Concrete: Class 4000, APWA Section 03 30 04. If necessary, provide concrete that achieves design strength in less than 7 days. Use caution; however, as concrete crazing (spider cracks) may develop if air temperature exceeds 90 degrees F.
   D. Reinforcement: Galvanized or epoxy coated, deformed, 60 ksi yield grade steel, ASTM A615.
   E. Concrete Curing Agent: Clear membrane forming compound with fugitive dye (Type ID Class A), APWA Section 03 39 00.

3. **EXECUTION**
   A. Base Course Placement: APWA Section 32 05 10. Maximum lift thickness before compaction is 8-inches when using riding equipment or 6-inches when using hand held equipment. Compaction is 95 percent or greater relative to a modified proctor density, APWA Section 31 23 26.
   B. Reinforcement: Not required if driveway apron is constructed without a cold joint.
   C. Concrete Placement: APWA Section 03 30 10.
      1) Install expansion joints vertical, full depth, with top of filler set flush with concrete surface.
      2) Install contraction joints vertical, 1/8-inch wide or 1/4 slab thickness if the slab is greater than 8-inches thick. Maximum length to width ratio for non-square panels is 1.5 to 1. Maximum panel length (in feet) is 1.5 times the slab thickness (in inches).
      3) Provide 1/2-inch radius edges. Apply a broom finish. Apply a curing agent.
   D. Protection and Repair: Protect concrete from deicing chemicals during cure. Repair construction that does not drain. If necessary, fill flow-line with water to verify.

TYPE A

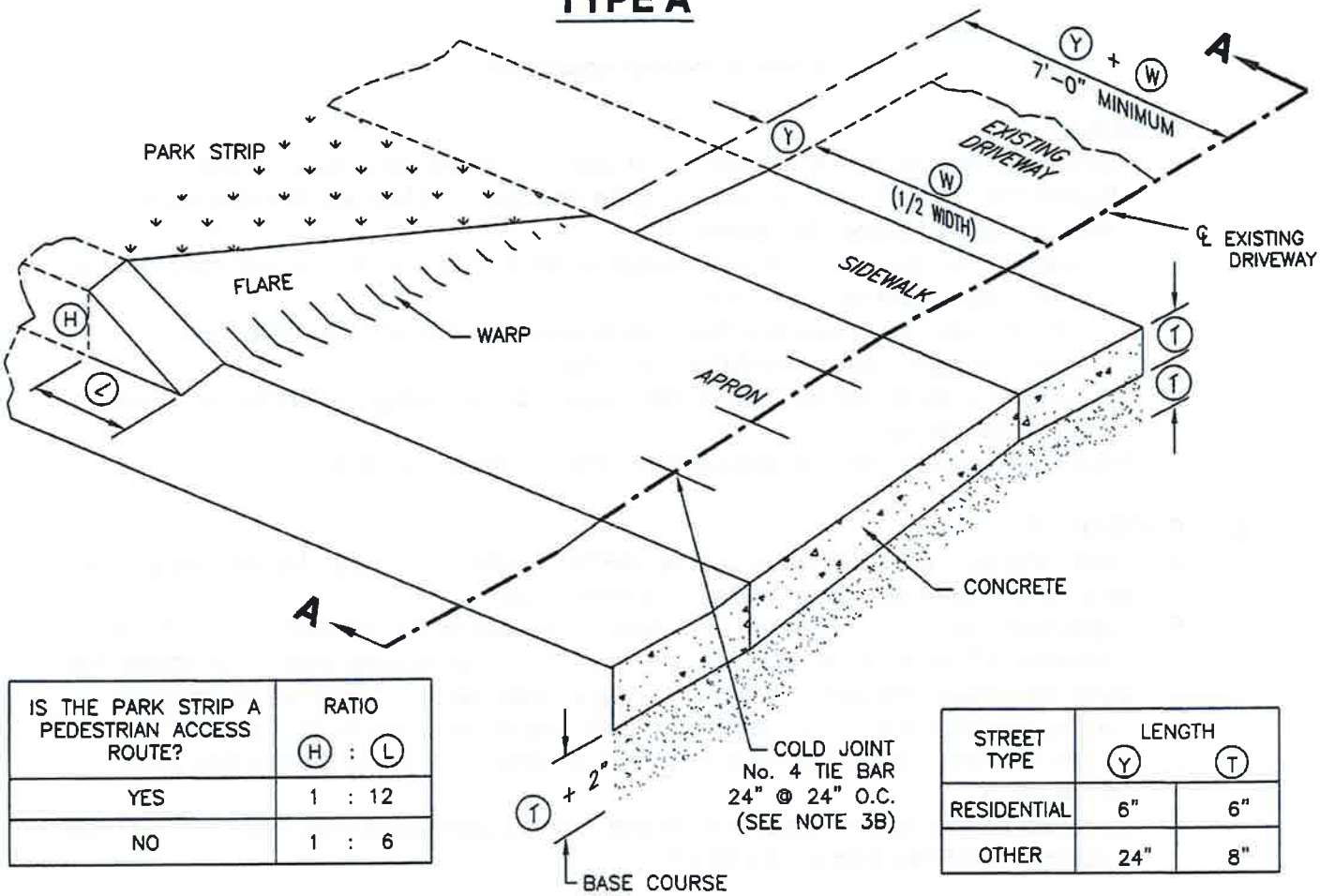

IS THE PARK STRIP A PEDESTRIAN ACCESS ROUTE?	RATIO (H) : (L)
YES	1 : 12
NO	1 : 6

STREET TYPE	LENGTH (Y)	(T)
RESIDENTIAL	6"	6"
OTHER	24"	8"

OBLIQUE

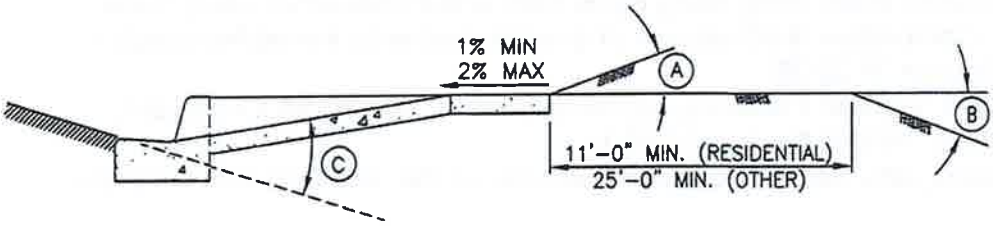

STREET TYPE	BREAK OVER ANGLE (MAXIMUM) (A)	(B)	(C)
RESIDENTIAL	16%	12%	16%
OTHER	6%	8%	10%

SECTION A-A - APPROACH REQUIRING SERVICE TRUCK ACCESS

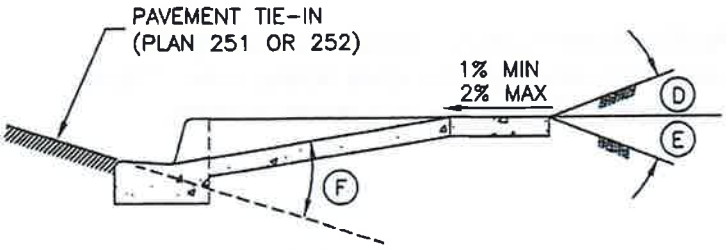

STREET TYPE	BREAK OVER ANGLE (MAXIMUM) (D)	(E)	(F)
RESIDENTIAL	16%	12%	16%
OTHER	6%	8%	10%

SECTION A-A - TYPICAL DRIVEWAY APPROACH

Flare driveway approach

1. **GENERAL**
   A. Variance from specified dimensions and slopes must be acceptable to the ENGINEER. System configuration may be changed at ENGINEER's discretion.
   B. Field Changes to Slope Requirements:
      1) Grades may have a 6 percent change in slope over a 11 feet wheel base run for both crest or sag vertical curves.
      2) Where heavy truck use and fire truck access applies, or to improve design speed, design grades should be cut in half.
      3) Specific uses or site conditions may require profile design submittal for review and acceptance.
   C. Additional requirements are specified in APWA Section 32 16 13..

2. **PRODUCTS**
   A. Base Course: Untreated base course, APWA Section 32 11 23. Do not use gravel as a base course without ENGINEER's permission.
   B. Expansion Joint Filler: 1/2-inch thick type F1 full depth, APWA Section 32 13 73..
   C. Concrete: Class 4000, APWA Section 03 30 04. If necessary, provide concrete that achieves design strength in less than 7 days. Use caution; however, as concrete crazing (spider cracks) may develop if air temperature exceeds 90 degrees F.
   D. Reinforcement: Galvanized or epoxy coated, deformed, 60 ksi yield grade steel, ASTM A615.
   E. Concrete Curing Agent: Clear membrane forming compound with fugitive dye (Type ID Class A), APWA Section 03 39 00.

3. **EXECUTION**
   A. Base Course Placement: APWA Section 32 05 10. Maximum lift thickness before compaction is 8-inches when using riding equipment or 6-inches when using hand held equipment. Compaction is 95 percent or greater relative to a modified proctor density, APWA Section 31 23 26.
   B. Reinforcement: Not required if driveway apron is constructed without a cold joint.
   C. Concrete Placement: APWA Section 03 30 10.
      1) Install expansion joints vertical, full depth, with top of filler set flush with concrete surface.
      2) Install contraction joints vertical, 1/8-inch wide or 1/4 slab thickness if the slab is greater than 8-inches thick. Maximum length to width ratio for non-square panels is 1.5 to 1. Maximum panel length (in feet) is 1.5 times the slab thickness (in inches).
      3) Provide 1/2-inch radius edges. Apply a broom finish. Apply a curing agent.
   D. Protection and Repair: Protect concrete from deicing chemicals during cure. Repair construction that does not drain. If necessary, fill flow-line with water to verify.

TYPE B

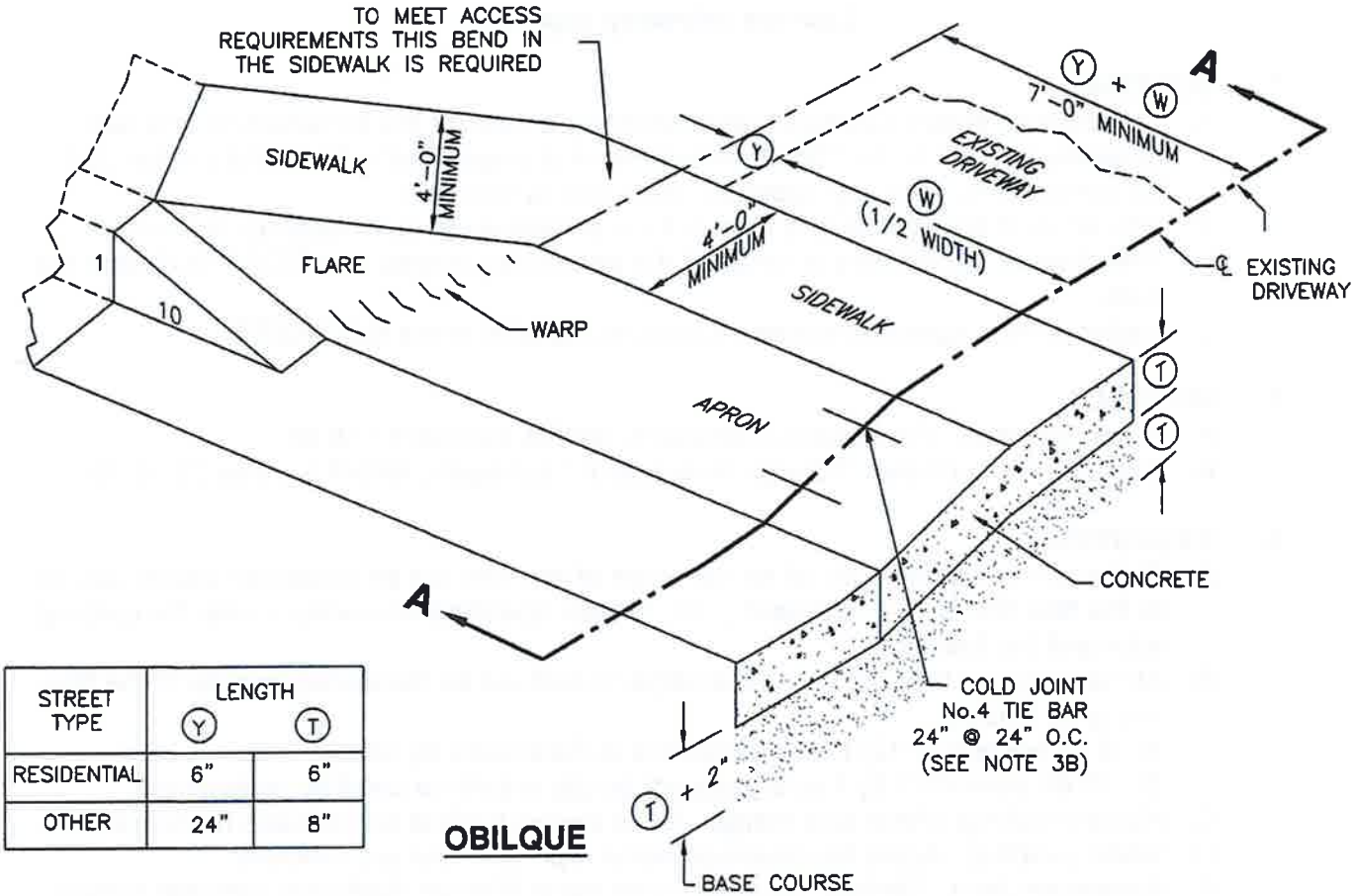

STREET TYPE	LENGTH Y	LENGTH T
RESIDENTIAL	6"	6"
OTHER	24"	8"

OBILQUE

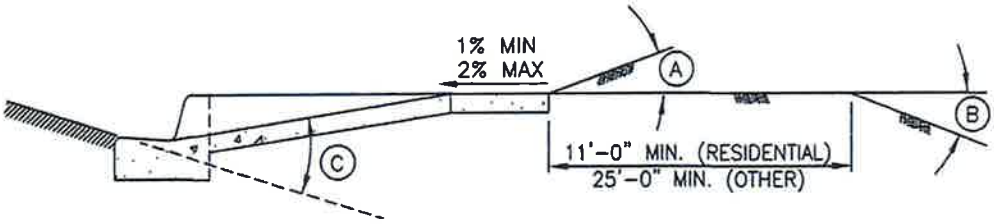

STREET TYPE	BREAK OVER ANGLE (MAXIMUM) A	B	C
RESIDENTIAL	16%	12%	16%
OTHER	6%	8%	10%

SECTION A-A APPROACH REQUIRING SERVICE TRUCK ACCESS

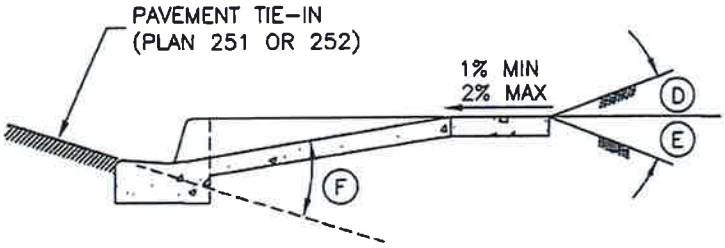

STREET TYPE	BREAK OVER ANGLE (MAXIMUM) D	E	F
RESIDENTIAL	16%	12%	16%
OTHER	6%	8%	10%

SECTION A-A TYPICAL DRIVEWAY APPROACH

Saw-cut driveway approach

1. **GENERAL**
   A. The drawing shows sawing off and removing a curb for the construction of a new driveway approach. Additional requirements are specified in Plan 215 or Plan 221 for constructing driveway approach after curb is removed.
   B. The slope of the right flare is required if a pedestrian access route abuts the curb. The slope of the left flare is required if a pedestrian access rout DOES NOT abut the curb.
   C. Variance from specified slopes must be acceptable to the ENGINEER.

2. **PRODUCT**
   A. Water repellant: Penetrating compound, APWA Section 07 19 00.
   B. Expansion Joint Filler: 1/2-inch thick type F1 full depth, APWA Section 32 13 73..

3. **EXECUTION**
   A. At the apron, cut the curb off so the slope of the curb cut as measured perpendicular to the flow line is 16.67 percent (1:6). Unless specified otherwise, make the curb cut intersect the flow line.
   B. At the flare, cut the curb off so the slope of curb cut as measured parallel to the flow line is as follows.
      1) 8.33 percent (1:12) if curb borders a surface used by pedestrians.
      2) 16.67 percent (1:6) if curb <u>does not border</u> a surface used by pedestrians.
   C. No over-cutting where cuts merge. Grind sawed surface so no blade marks remain.
   D. Water proofing. Apply full coverage water repellant over cut concrete.
   E. Expansion Joint: Vertical, full depth, with top of filler set flush with concrete surface.

NARRATIVE: THIS PLAN IS USED IF AN EXISTING CURB MUST BE CUT TO INSTALL A DRIVEWAY APPROACH. THE SLOPE OF THE CURB FLARE DEPENDS UPON WHETHER THE PARK STRIP IS LANDSCAPED OR IF THE PARK STRIP IS CONCRETE.

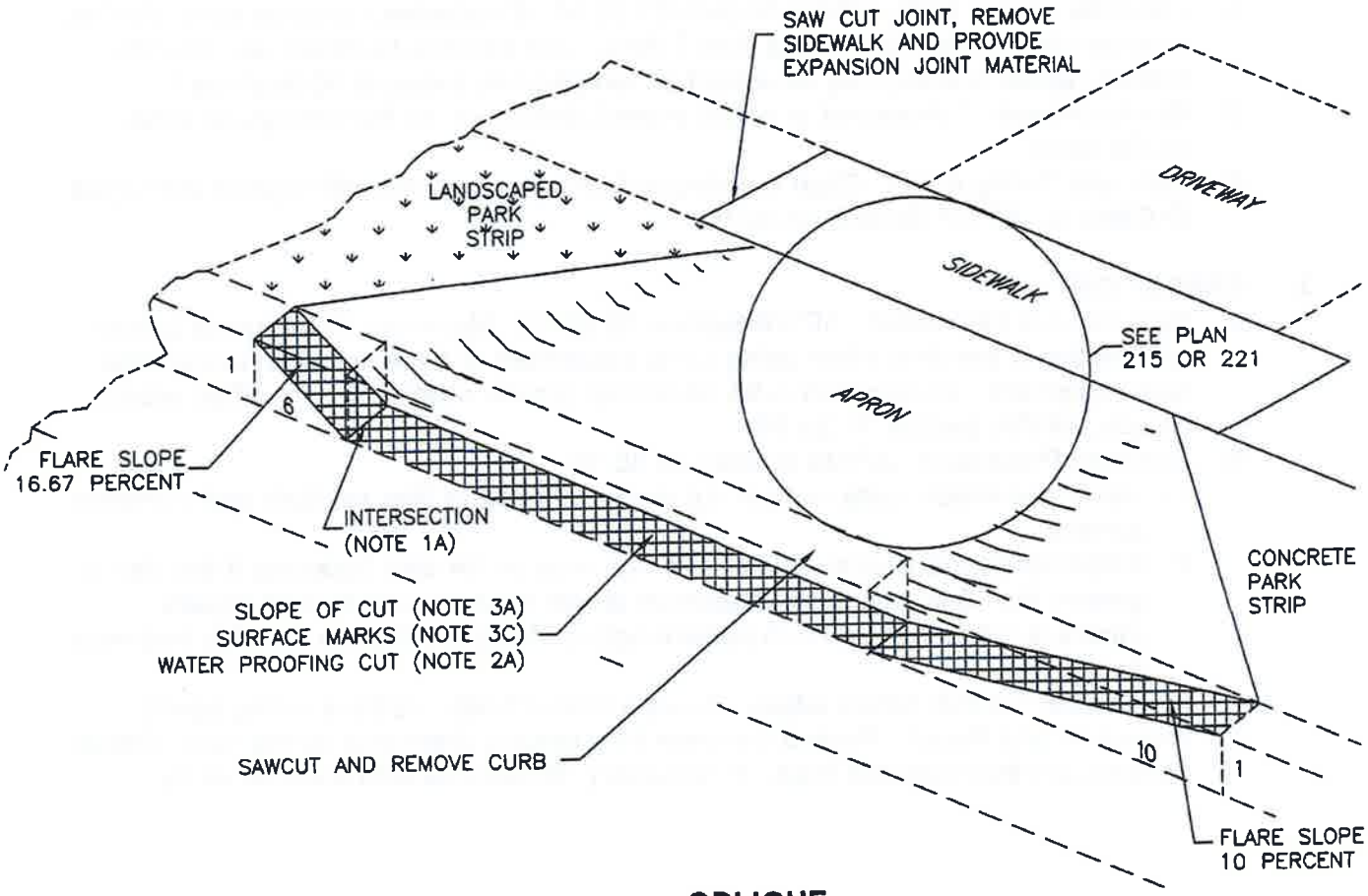

OBLIQUE

Mountable curb driveway approach

1. **GENERAL**
   A. Variance from specified dimensions and slopes must be acceptable to the ENGINEER. System configuration may be changed at ENGINEER's discretion.
   B. Additional requirements are specified in APWA Section 32 16 13.

2. **PRODUCTS**
   A. Base Course: Untreated base course, APWA Section 32 11 23. Do not use gravel as a base course without ENGINEER's permission.
   B. Expansion Joint Filler: 1/2-inch thick type F1 full depth, APWA Section 32 13 73..
   C. Concrete: Class 4000, APWA Section 03 30 04. If necessary, provide concrete that achieves design strength in less than 7 days. Use caution; however, as concrete crazing (spider cracks) may develop if air temperature exceeds 90 degrees F.
   D. Reinforcement: Galvanized or epoxy coated, deformed, 60 ksi yield grade steel, ASTM A615.
   E. Concrete Curing Agent: Clear membrane forming compound with fugitive dye (Type ID Class A), APWA Section 03 39 00.

3. **EXECUTION**
   A. Base Course Placement: APWA Section 32 05 10. Maximum lift thickness before compaction is 8-inches when using riding equipment or 6-inches when using hand held equipment. Compaction is 95 percent or greater relative to a modified proctor density, APWA Section 31 23 26.
   B. Concrete Placement: APWA Section 03 30 10.
      1) Install expansion joints vertical, full depth, with top of filler set flush with concrete surface.
      2) Install contraction joints vertical, 1/8-inch wide or 1/4 slab thickness if the slab is greater than 8-inches thick. Maximum length to width ratio for non-square panels is 1.5 to 1. Maximum panel length (in feet) is 1.5 times the slab thickness (in inches).
      3) Provide 1/2-inch radius edges. Apply a broom finish. Apply a curing agent.
   C. Protection and Repair: Protect concrete from deicing chemicals during cure. Repair construction that does not drain. If necessary, fill flow-line with water to verify.

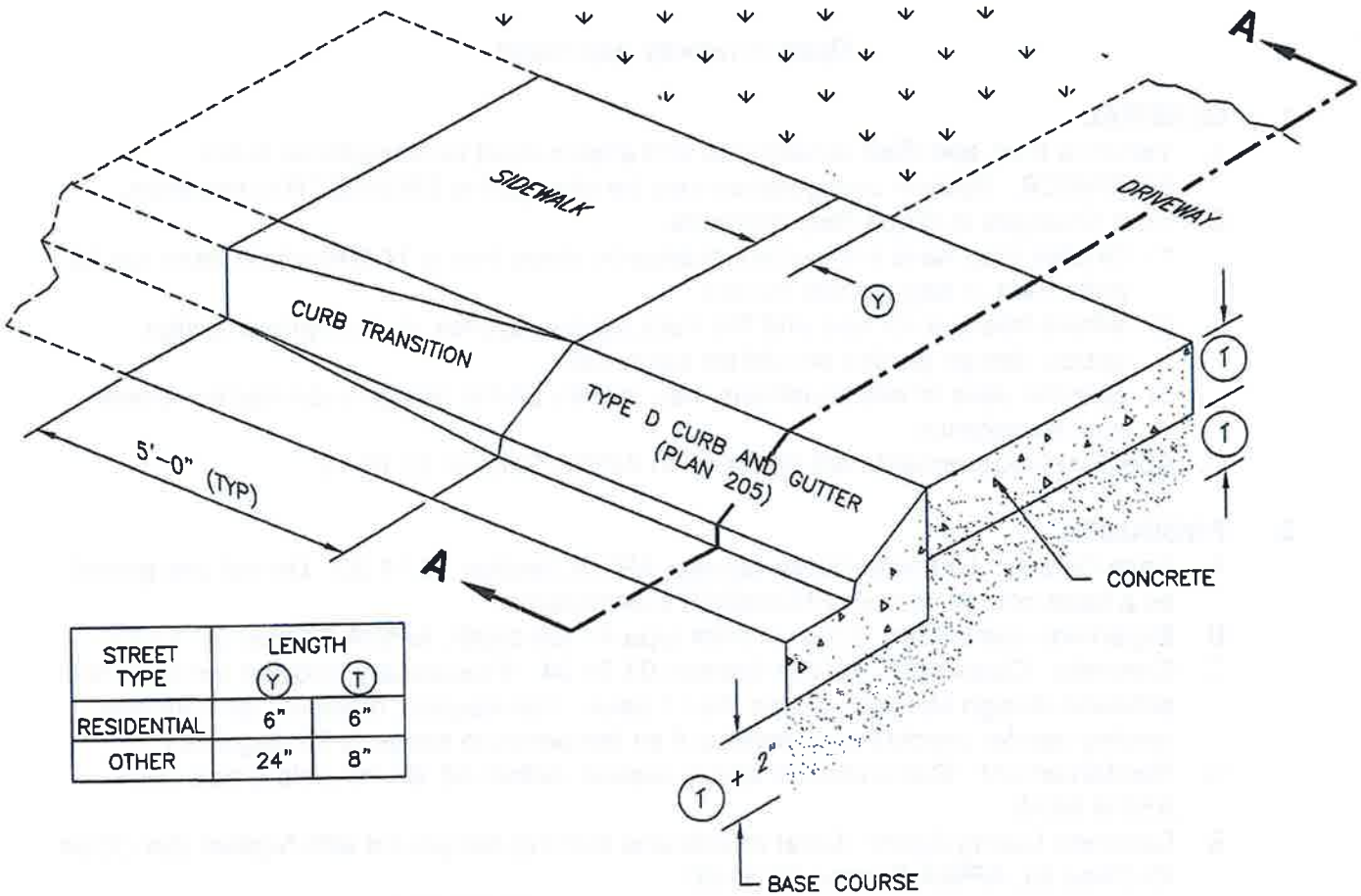

STREET TYPE	LENGTH Y	LENGTH T
RESIDENTIAL	6"	6"
OTHER	24"	8"

OBLIQUE

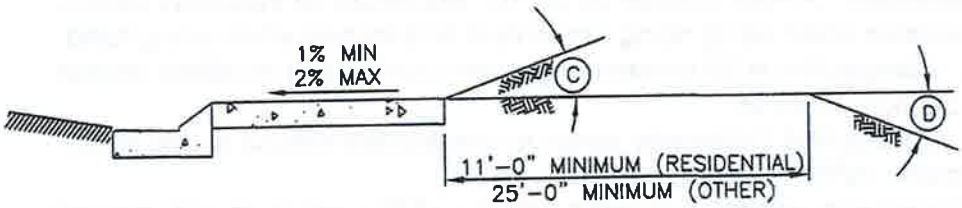

STREET TYPE	BREAK OVER ANGLE (MAXIMUM) C	BREAK OVER ANGLE (MAXIMUM) D
RESIDENTIAL	16%	13%
OTHER	6%	10%

SECTION A-A - APPROACH REQUIRING SERVICE TRUCK ACCESS

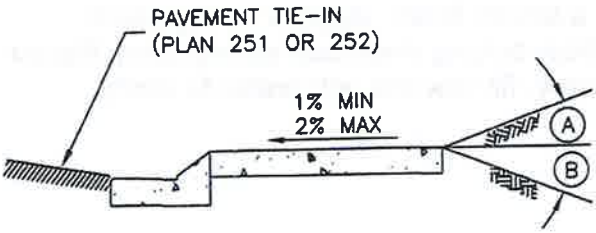

STREET TYPE	BREAK OVER ANGLE (MAXIMUM) A	BREAK OVER ANGLE (MAXIMUM) B
RESIDENTIAL	16%	12%
OTHER	6%	8%

SECTION A-A - TYPICAL DRIVEWAY APPROACH

Open driveway approach

1. **GENERAL**
   A. Variance from specified dimensions and slopes must be acceptable to the ENGINEER. System configuration may be changed at ENGINEER's discretion.
   B. Field Changes to Slope Requirements:
      1) Grades may have a 6 percent change in slope over a 11 feet wheel base run for both crest or sag vertical curves.
      2) Where heavy truck use and fire truck access applies, or to improve design speed, design grades should be cut in half.
      3) Specific uses or site conditions may require profile design submittal for review and acceptance.
   C. Additional requirements are specified in APWA Section 32 16 13.

2. **PRODUCTS**
   A. Base Course: Untreated base course, APWA Section 32 11 23. Do not use gravel as a base course without ENGINEER's permission.
   B. Expansion Joint Filler: 1/2-inch thick type F1 full depth, APWA Section 32 13 73..
   C. Concrete: Class 4000, APWA Section 03 30 04. If necessary, provide concrete that achieves design strength in less than 7 days. Use caution; however, as concrete crazing (spider cracks) may develop if air temperature exceeds 90 degrees F.
   D. Reinforcement: Galvanized or epoxy coated, deformed, 60 ksi yield grade steel, ASTM A615.
   E. Concrete Curing Agent: Clear membrane forming compound with fugitive dye (Type ID Class A), APWA Section 03 39 00.

3. **EXECUTION**
   A. Base Course Placement: APWA Section 32 05 10. Maximum lift thickness before compaction is 8-inches when using riding equipment or 6-inches when using hand held equipment. Compaction is 95 percent or greater relative to a modified proctor density, APWA Section 31 23 26.
   B. Reinforcement: Not required if driveway apron is constructed without a cold joint.
   C. Concrete Placement: APWA Section 03 30 10.
      1) Install expansion joints vertical, full depth, with top of filler set flush with concrete surface.
      2) Install contraction joints vertical, 1/8-inch wide or 1/4 slab thickness if the slab is greater than 8-inches thick. Maximum length to width ratio for non-square panels is 1.5 to 1. Maximum panel length (in feet) is 1.5 times the slab thickness (in inches).
      3) Provide 1/2-inch radius edges. Apply a broom finish. Apply a curing agent.
   D. Protection and Repair: Protect concrete from deicing chemicals during cure. Repair construction that does not drain. If necessary, fill flow-line with water to verify.

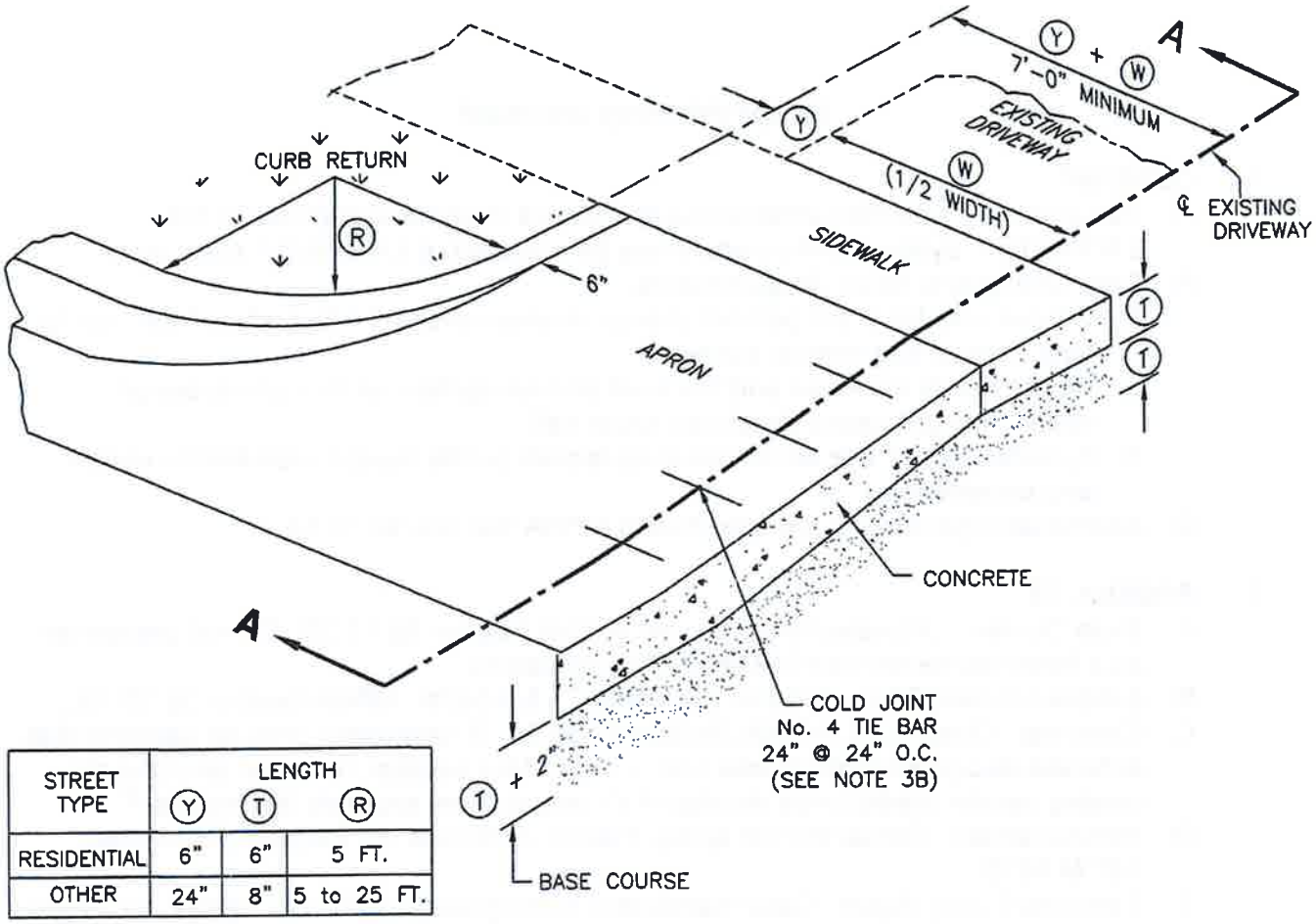

STREET TYPE	LENGTH Y	T	R
RESIDENTIAL	6"	6"	5 FT.
OTHER	24"	8"	5 to 25 FT.

OBLIQUE

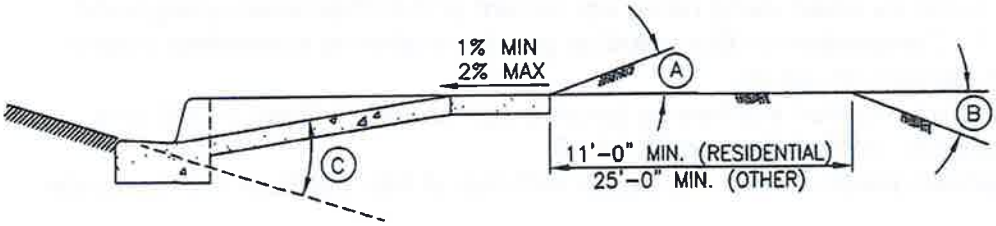

STREET TYPE	BREAK OVER ANGLE (MAXIMUM) A	B	C
RESIDENTIAL	16%	12%	16%
OTHER	6%	8%	10%

SECTION A-A - APPROACH REQUIRING SERVICE TRUCK ACCESS

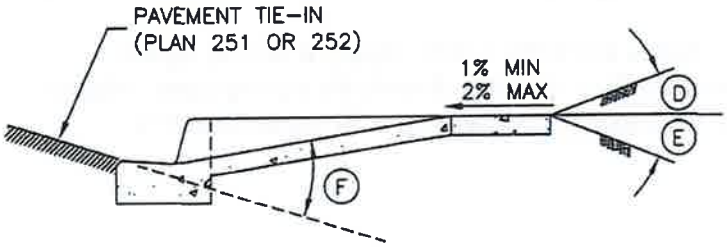

STREET TYPE	BREAK OVER ANGLE (MAXIMUM) D	E	F
RESIDENTIAL	16%	12%	16%
OTHER	6%	8%	10%

SECTION A-A - TYPICAL DRIVEWAY APPROACH

Bridge driveway approach

1. GENERAL

A. Variance from specified dimensions and slopes must be acceptable to the ENGINEER. System configuration may be changed at ENGINEER's discretion.

B. Field Changes to Slope Requirements:

1) Grades may have a 6 percent change in slope over a 11 feet wheel base run for both crest or sag vertical curves.
2) Where heavy truck use and fire truck access applies, or to improve design speed, design grades should be cut in half.
3) Specific uses or site conditions may require profile design submittal for review and acceptance.

C. Additional requirements are specified in APWA Section 32 16 13.

2. PRODUCTS

A. Base Course: Untreated base course, APWA Section 32 11 23. Do not use gravel as a base course without ENGINEER's permission.

B. Expansion Joint Filler: 1/2-inch thick type F1 full depth, APWA Section 32 13 73..

C. Concrete: Class 4000, APWA Section 03 30 04. If necessary, provide concrete that achieves design strength in less than 7 days. Use caution; however, as concrete crazing (spider cracks) may develop if air temperature exceeds 90 degrees F.

D. Reinforcement: Galvanized or epoxy coated, deformed, 60 ksi yield grade steel, ASTM A615.

E. Concrete Curing Agent: Clear membrane forming compound with fugitive dye (Type ID Class A), APWA Section 03 39 00.

3. EXECUTION

A. Base Course Placement: APWA Section 32 05 10. Maximum lift thickness before compaction is 8-inches when using riding equipment or 6-inches when using hand held equipment. Compaction is 95 percent or greater relative to a modified proctor density, APWA Section 31 23 26.

B. Reinforcement: Not required if driveway apron is constructed without a cold joint.

C. Concrete Placement: APWA Section 03 30 10.

1) Install expansion joints vertical, full depth, with top of filler set flush with concrete surface.
2) Install contraction joints vertical, 1/8-inch wide or 1/4 slab thickness if the slab is greater than 8-inches thick. Maximum length to width ratio for non-square panels is 1.5 to 1. Maximum panel length (in feet) is 1.5 times the slab thickness (in inches).
3) Provide 1/2-inch radius edges. Apply a broom finish. Apply a curing agent.

D. Protection and Repair: Protect concrete from deicing chemicals during cure. Repair construction that does not drain. If necessary, fill flow-line with water to verify.

DO NOT CONSTRUCT THIS APPROACH WITHOUT ENGINEER'S WRITTEN APPROVAL

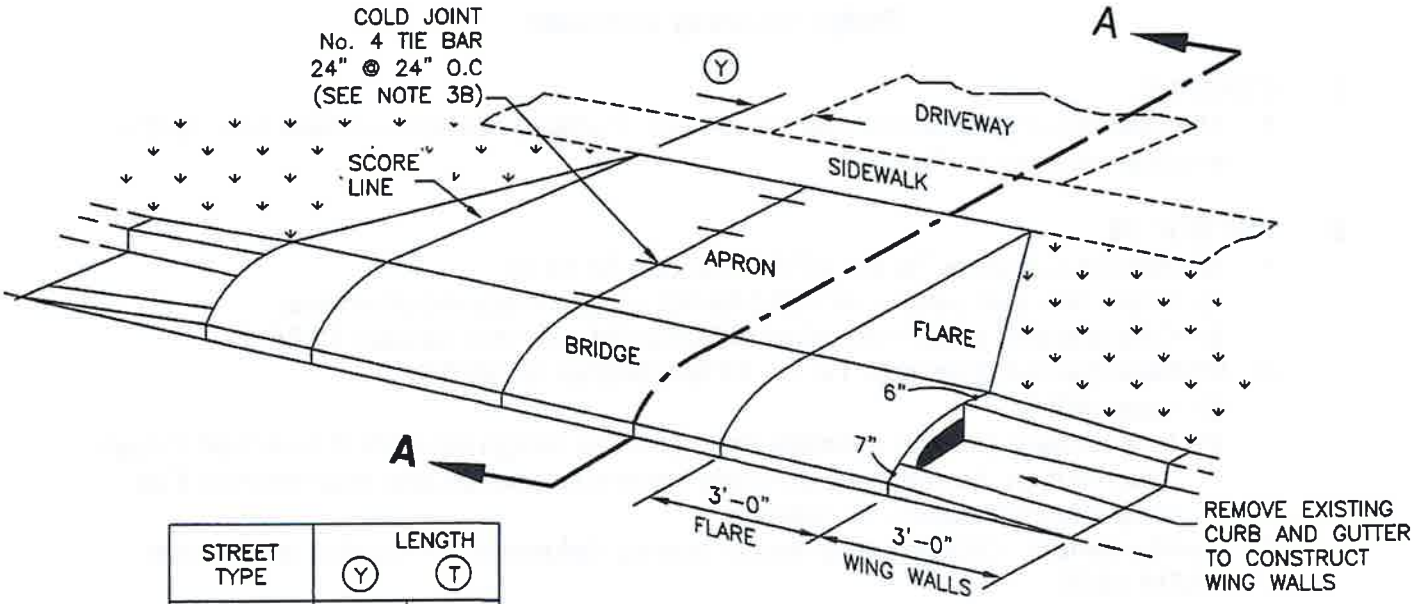

STREET TYPE	LENGTH Y	LENGTH T
RESIDENTIAL	6"	6"
OTHER	24"	8"

OBLIQUE

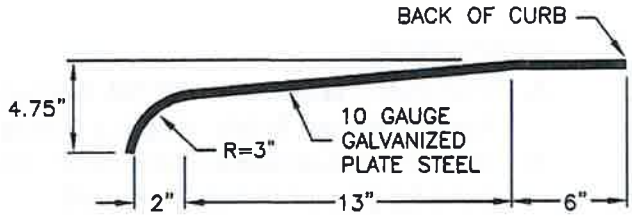

ARCH DETAIL

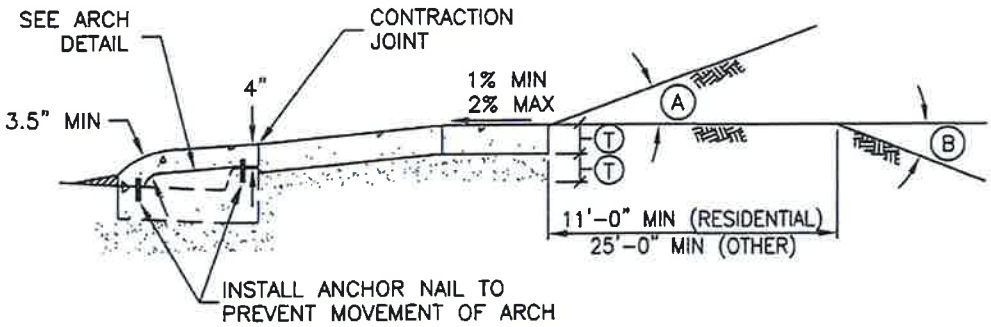

STREET TYPE	MAXIMUM GRADE BREAK A	MAXIMUM GRADE BREAK B
RESIDENTIAL	16%	12%
OTHER	6%	8%

SECTION A-A - APPROACH REQUIRING SERVICE TRUCK ACCESS

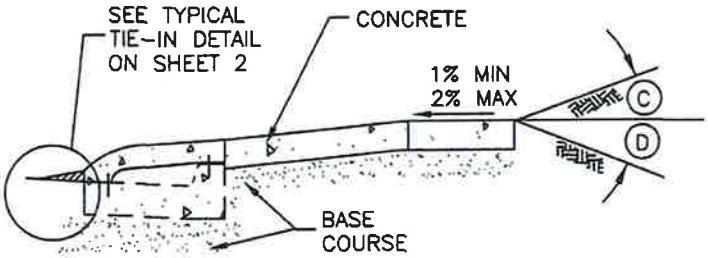

STREET TYPE	MAXIMUM GRADE BREAK C	MAXIMUM GRADE BREAK D
RESIDENTIAL	16%	12%
OTHER	6%	8%

SECTION A-A - TYPICAL DRIVEWAY APPROACH

Bridge driveway approach

1. **GENERAL**
   A. This drawing shows bituminous concrete or Portland cement concrete tie-in to the existing roadway surface.

2. **PRODUCTS**
   A. Bituminous Concrete Tie in: APWA Section 32 12 05.
      1) Warm weather patch – AC-20-DM-1/2, unless indicated otherwise.
      2) Cold weather patch – modified MC-250-FM-1,APWA Section 33 05 25.
   B. Portland Cement Concrete Tie in: APWA Section 03 30 04.
      1) Class 4000.
      2) If necessary, provide concrete that achieves design strength in less than 7 days. Use caution; however, as concrete crazing (spider cracks) may develop if air temperature exceeds 90 degrees F.
   C. Reinforcement: Galvanized or epoxy coated, deformed, 60 ksi yield grade steel, ASTM A615.
   D. Concrete Curing Agent: Clear membrane forming compound with fugitive dye (Type ID Class A), APWA Section 03 39 00.

3. **EXECUTION**
   A. Concrete Placement: APWA Section 03 30 10. Provide 1/2-inch radius edges. Apply a broom finish. Apply a curing agent.
   B. Bituminous Concrete Placement: Compact to 94 percent of ASTM D2041 (Rice density) plus or minus 2 percent.

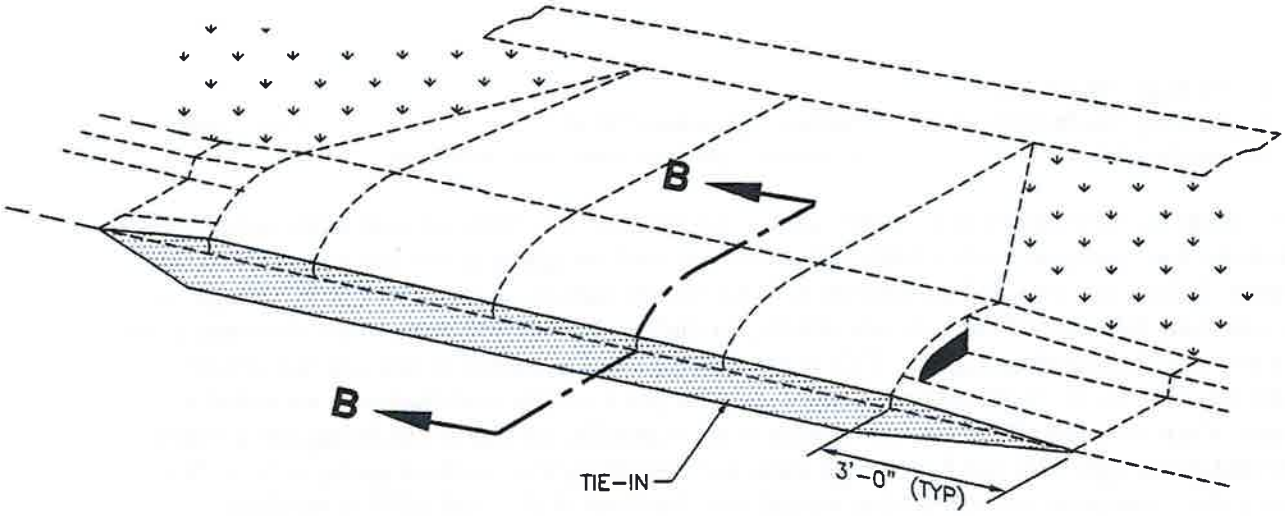

OBLIQUE

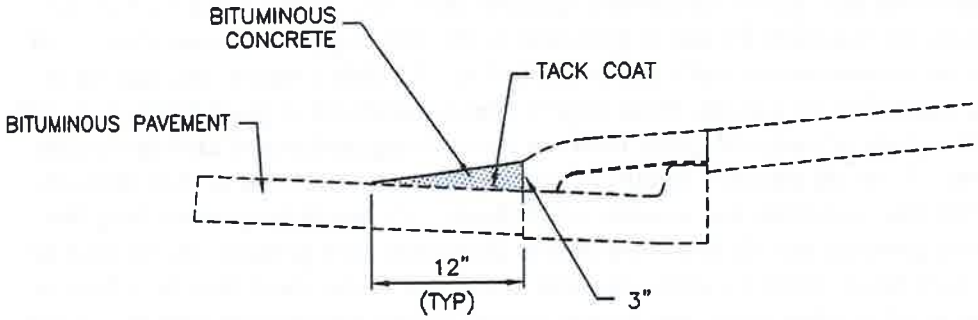

SECTION B-B - BITUMINOUS PAVEMENT TIE-IN

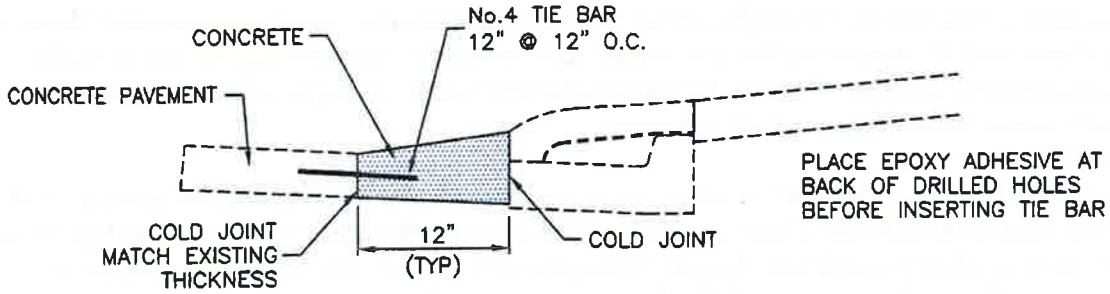

SECTION B-B - CONCRETE PAVEMENT TIE-IN

2. PUBLIC HEARING

Engineering Standard Revision (Recommendation)	Section 5 (Standard Details) Concrete Curb and Gutter, and Driveways	Kent Fugal

Kent: What we have before you tonight are some proposed amendments to our engineering standards. I am going to explain both of these to you but I am going to ask you to not act on one of them. I'll tell you why as I go through it. What we are looking at on this are some changes to our standards for some of our concrete details, for curb and gutter and some of our driveways. So first lets talk about curb and gutter. This is actually the one I am going to ask you not to take action on. This is our existing standard drawing with just a couple modifications, we added a couple of notes on this. What we are wanting to do is specify, instead of this being our standard curb and gutter type with our 7 inch high curb, and everything that we have going on here. We were going to recommend instead that instead this detail out of the Utah APWA standard drawings be our standard curb and gutter. It gets us to a 6 inch high curb which makes it a lot easier to make drive approaches and ADA access work, than with the taller 7 inch curb. We would still have taller curb available in our standards where we need it. If we have a location where we need to carry a lot of drainage water, for instance. We could still put a taller curb, but this was what we're proposing as our standard curb. What our intent here was, the standard curb would be Utah APWA Standard Plan 205 Type A Curb and Gutter 30 inch. We were saying other curb types, including the ones in our current standard drawings, sheet C1 and C1A of our standard details, would be available for use, if approved by the city engineer because they're all curbs that there can be circumstances that's our best solution. We didn't want to just get rid of everything else, we wanted to say that no, those require special approval. A good example would be if we're filling in a piece of curb and gutter between two existing portions of curb and gutter that were built to one of our old standard details, of course, we want to fill that in with the same curb and gutter rather than transition and transition right back. We would keep everything that we have, but we were going to specify this. Now here is the reason I am going to ask you not to take action on this curb detail. I had a contractor come in and talk to me about this, he's familiar with this detail from work in other cities, and he was telling me that the problem with this is that there ends up being a lot more concrete in this curb and gutter. The way that this has been drawn, where the front of this ends up being 9 ½ in thick. You are down to 6 inches by the time you get to the flow line of the gutter but out at the lip it's 9 ½ in thick. It ends up taking a lot of concrete. The contractor that I was talking to had concerns about that. He was recommending that we go with more of this type of curb, this type HB30-7, that's another type that is in the APWA standard plans. That has the 7 in high curb to be able to handle more water when needed. He was saying if we could develop more like a 6 in high curb version of this drawing, he said it would save a considerable amount of money for the developers. Not requiring so much extra concrete that really doesn't serve that much of a purpose.

Jett – 20%? 50?

Kent – I don't remember the exact number, but it was enough that it was going add quite a bit of cost. When you look at a subdivision that might have a couple thousand feet of curb and gutter it was substantial, what it would add. It would add quite a bit of cost. We're proposing to come back to you with a revised version of this. But we are not ready to present that here tonight.

Jett – When you say a revised version that 7 in you will bring it down to 6 in, that's your idea of the revised version.

Kent – Yes, So that's the deal with the curb. We do still want to adopt the new curb section with

the one we are using now, if we modify adopt the new curb section from the one we're using now with the 7 in high curb. If we modify this to the 6 in height, it gets us the height of curb we want. We still get the full 6 in of thickness underneath the flow line, that the other plan provided that we were intending to go to. It resolves the issue of requiring a lot more concrete.
Jett- May I ask a question? In the last 20 years we've come out with different additives of concrete such as fiber meshes and then long fiber meshes. If we reduce the amount of concrete thickness, but we reinforced it with a type of fiber mesh type material, would that potentially allow us a cost savings in concrete but a more strengthened concrete.
Kent – That is a good question. The challenge with that, you've got two ways to reinforce it. One is rebar, which gets rather expensive. The other option you can do is to use the fiber mesh. There are issues with the fiber mesh. It's much, much more difficult to work with and finish. It can be a challenge to get that mixed uniformly, and so it's successfully used in a lot of places. I am a little bit wary of it. I am not sure that it would really be doing anyone any favors by adopting a standard that used the fiber.
Jett – It's just turned into like Bitcoin and gold. I mean, concrete has gotten so expensive.
Kent – And that's why we want to come up with a different option than what I showed you. Initially, with this right here, with that really thick concrete on the front. Cause concrete has gotten quite expensive. It makes sense that we try to come up with a section that works better for us. This one that's here is actually based on what UDOT has. It's a lot of concrete. So we'll come back to you again with updates. We're going to come back through again with updates to our corner pedestrian ramps for ADA, and we can bring this curb section back to you again with that when we come back through. So that's where I'd like to go with that.
The other item that we had on this with the standard details is our standard detail is our standard detail C3 for driveways. The challenge we run into with this one, our standard detail, this detail for how you build a drive approach with the sidewalk coming through is completely out of compliance with ADA. And has been for many many years. For some reason, it's still in out standards. So we have standards that really require construction that is non ADA compliant. Obviously, that needs to be fixed. We're proposing instead is our Standard detail C3 would just include the notes of what to use for drive approaches, and we've pointed out 3 of the plans in the Utah APWA standard plans; plans 215, 221, and 222, that would be acceptable for use, at any location on driveways. Then there are some additional ones that are part of the standard plans that could be approved for a specific purpose. This is what we're proposing. This would be one of the standard plans that would be acceptable, that is ADA compliant. The difference between this and our standard plan is the entire width of the sidewalk gets ramped down. Then you go through the drive approach, and then it ramps back up at the other side. We keep the cross slope on the sidewalk here through the drive approach, ADA compliant. We keep that to 2% or less. So that we don't have an ADA violation there at those drive approaches. Just anecdotally, As I go out and walk around my neighborhood to stretch my legs and get a few steps in. I won't walk on the sidewalk because those drive approaches are too hard for me to walk through. Getting on that slope, me being a little unstable on my feet, with my cane, I have a hard time walking on it. So I will walk on the asphalt, the entire time that I am out taking my walk around the neighborhood. Rather than try to get on the sidewalk, off the sidewalk, on the sidewalk, off the sidewalk, because it's too hard to walk through the drive approaches that are non ADA.
Jett – Some of them are scary
Kent – Yeah. Well, all the details in here meet ADA, but this is one we think is a good option. They do show on here a curb that could be put in if necessary. There's an option, if you build this

type that you either just bring your grading down to match the concrete as it comes around here, or if you want the grading on the lot to match the sidewalk here and the driveway back here. You can put a curb in there to retain that slope. So this is an optional thing that can be built if necessary. So this is an option that gets you that ADA compliance without requiring any additional right of way. It all happens within the right of way. The right of way line would still be just behind the sidewalk here. This whole sidewalk stays within the right of way. That's one option, if we go to standard plan 221, this is showing us what the drive approach would look like if we have a planter strip, right? We do have some planter strips in some parts of town, in some of the older neighborhoods. That's something that we are considering for new developments in the future is planter strips at least as an option. This is how you achieve that, you put in your driveway apron in the planter strip, the sidewalk can just stay at the same elevation, same cross slope, going straight through. Doesn't cause any problems, so that's a good solution to get ADA compliance. Then the third one that is a good solution is you build the drive apron there in the approach, the same as what we do now, but the difference is that there's no longer the sidewalk coming through here, the sidewalk you route around behind the drive apron.
Jett – On to the people's driveway?
Kent: You route it back out in this case it would be outside of the right of way, yes, so then you have a couple things that can be done. If someone were to choose to use this option, then there would need to be an easement granted for that public sidewalk. To encroach onto their lot. This is something that we could very easily make a standard part of our subdivision plats. We have a front public utility easement. We could have that easement also include, public sidewalk easement. So that anywhere that the sidewalk needed to encroach into that, it could, and the easement would be there for that. But if someone wanted to implement this solution, if they felt like this worked better for their home build. Then ramping the entire width of the sidewalk down and back up, then they could do it. We just need to have an easement for it.
Jett: My only struggle with this one is driveways are 25 foot long and everyone is driving 35 foot trucks.
Kent: That is a concern, you're absolutely right on that. But this would be an acceptable type based on that comment, Tom, are you of the opinion that this should be more of an optional one where we have the space?
Jett: I don't think we should offer it.
Kent: If there's plenty of room between the right-of-way line and the front of the garage for parking without getting too close to it. This could certainly be moved to the list of ones that require specific approval for their project. If you're more comfortable with that.
Don: An increased front setback.
Kent: Or the other option is we increase front setbacks.
Jett: That's not a good option
Kent: That has its challenges. If you would like to make that part of your recommendation to city council, that this goes on the approval list and not the already approved list that certainly would be a reasonable recommendation to make to city council. The other drive approach types that are in the Utah APWA standard drawings. This one here is really looking at a retro fit situation where you have a planter strip, it can certainly be used, it is ADA compliant. It's very similar to the second drawing I showed you. We just put this on the list where it can be approved, where it makes sense, where it's needed. The other one that's on that list is this one right here. This one is similar to what we have with our low-profile curb, except it's not low-profile. It's a similar shape, but it's not low profile. These are a little bit difficult to drive through. There's a pretty

good bump there. They are mountable, a vehicle can make it through. This is if anyone was here for the city council discussions, we had about a drive approach over in the Fiddler's Canyon area. The neighbors were looking for some relief. This would be similar to that. That one was serving a private road, so you have a lot of traffic having to go through it. For a single drive approach coming into your driveway, this certainly workable. There may be locations where this is the best option. We wanted to still include that as something that we could approve on a case-by-case basis. This also meets ADA because the sidewalk is just a normal sidewalk running through. The sidewalk doesn't vary other than that it needs to be thickened through the drive approach. Other than that, it looks just like all the rest of the sidewalk on the street. Then there's this other option that could be approved where it makes sense, that is to actually put a curb return where you have a planter strip. You have this as an option that could potentially be utilized if there is a reason for it. Where instead of just a flare, you actually put in a curb return on both sides coming into the drive approach. It certainly meets ADA, if there's a project that's the best solution we could give them the go ahead to use this option. There's still some other ones too, we have some of this in our current standard drawings where you're actually bridging over the flow line of the gutter this is not something we would typically do, but there are two occasions where this can be extremely helpful. One is if we have a really deep gutter that's carrying irrigation water, which we have a number of those in the older part of town. The bridge is a good solution for that. The other application where this can make some sense is if we've got a lot someone is trying to build on and the steepness of that lot is such that it is really hard to position the house, to get it at an elevation that works and get the driveway workable to be able to get up to the garage. If we did a bridge like this, that helps. Get you started a little higher before you start heading up that driveway. This is something we do want to have as that can be considered on a case by case basis. If there's a reason why it should be considered it can. So this would be part of our standards, and then this is just a different version of the same thing. Those are ones that would require approval for their use. We would just have the other first three I showed you that would be the automatic already approved that they can just use at their option. Except that we're talking about this one here that this one here would be one that would require approval. That approval can consider how far back is the garage, do we have adequate depth that this is workable without people having to park on the sidewalk. So that's my presentation on that, are there any questions I can answer for you?

Davis: If we're doing a motion eventually, how do we identify the different ones? You know because there is the one that we all are agreeing that we should say that it requires approval.

Kent: I'm asking you to not take action on the first one, on the revisions to what would basically be our existing standard detail on C1 and C1A, we'll just leave that alone for now. But then on C3, if you wanted to do that plan let me scroll back to just make sure I am remembering that correctly

Jett: So while we're doing this, Dallas, if I may impose, you are a developer designer, you do a lot of subdivisions and so for, so you guys do this all day long

Dallas: I was going to say if you put this in front of my items, then I'm obligated to comment on it. So, the curb changed specifically on the six inch to seven inch, I think the reason the city is proposing it is to help with ADA compliance and the height. The con to it is the stormwater capacity in the road. So, if you go from the seven inch to the six inch, what you have, with the current seven inches on a road cross section on a standard 45 foot right of way. You can get the storm water to overtop the crown, which increases the cross-sectional area of what you can carry on the road. So the hesitation that I would have in changing it from seven to six, specifically, if

we're going to adopt additional drivcways that can bc compliant in other configurations is just that if you change it to six, and you remove the capacity in the road. Then you're going to introduce more storm drain that's required because your road capacity is reduced. That's going to translate to increased cost of storm drain. Then, depending on where most of the development nowadays is heading into the valley, where it's flat with not a lot of slope. As soon as you introduce storm drains at very flat slopes. Those pipes don't have a lot of capacity, and so when you don't have a lot of capacity, you then have to go to a bigger pipe, and then as soon as you get the deeper you go the harder it is to get that to discharge. It just kind of cascades into it if you reduce the road capacity. Then you're going to introduce storm drain, and then to carry that increased capacity, you're going to have to go to bigger storm drain pipes, which is just going to push you deeper. Which then pushes your basins down further, and then in a lot of the valley scenarios that we're seeing today there is no storm drain outfall lines to discharge, and so you are just making deeper and deeper basins, and that's the concern with changing the detail is if there's a way to make the driveways compliant and prserve the capacity in the roads then I would be more in favor of adopting the driveway and keeping the curb to preserve just because of storm drains expense. Then in the flat areas to really carry any water, you have to go bigger than the city's minimum and then on the driveway side I think that so the mechanics of what the city's changed as far as sidewalks, so now the sidewalks can be deferred for the, I haven't done a project with the new ones, but it can be deferred for 12 months? Eighteen months?
Kent: Up to two years
Dallas: Up to two years and so, I think that with these changes and the options, I think you almost have to unilaterally say PUEs, because when we do a subdivision we're going to lay out lots. Then we're going to put the curbs in, and then we're going to show a sidewalk. As far as which one of these driveway approaches is going to be adopted. I have no idea, no one has any idea, especially if you are a developer and then you are selling lots to somebody. I think the PUE slash public sidewalk easement has to be mandatory because otherwise it's enforced on the building permit and the you are granting easements on a per. I think that's a great addition to give the flexibility with the different driveways. I don't know if the APWA, I've only really worked with APWA recently in Parowan, but I am not very familiar with the standards overall, like I am with the Cedar City details. I believe that most of the APWA is all based on six inch curbs.
Kent: Yeah, for the most part, yes, the APWA does have some taller curb types. Like the one I showed that was seven inches, but for the most part, they are six inch curves.
Dallas: I guess the thing that I am wondering from the mechanics standpoint, at least on the subdivision and construction drawings, is we go through and model a road. We show the six- or seven-inch curb, whatever it ends up being, and the developer doesn't put the sidewalk in, and then sells the lots, and they either jog the sidewalk around it and pour a driveway, rip out and put the more aggressive low profile curb in. I think with the different options in driveways, I think virtually no one's putting sidewalk in except on major roads.
Kent: Yeah, probably true
Dallas: Because of how no one knows where the driveways are going to be until you're pulling a permit. Which I don't think is a bad thing, I was just more so thinking out loud.
Kent: Yeah, it's really the same problem we have now. They're pulling out the curve, they're cutting the curb down and pulling out the sidewalk and doing the drive approach, right?
Dallas: But that's where I think if you make the PUE mandatory.
Kent: Especially if we do offer the 221.2 is the name of that drawing that shows the sidewalk

routed around the drive approach. If that is one of the preapproved options, then I think you're right that we would need to make the public sidewalk easement be a standard requirement on the subdivision plat. That would be really the only way to make that workable. If it's not one of our standard options, then they have to have special approval to do it. Then maybe asking for the easement at that time isn't as big of an ask.
Dallas: I don't think you're going to know that until the building permit, right?
Kent: It would come at the building permit time, that is correct.
Webster: Thank you Dallas, Jennifer, does that answer your question?
Davis: I need that in a third grade level.
Kent: I do think Dallas brings up some good points, in terms of the water carrying capacity of the curb. As we are trying to revisit our drainage standards as well, I am of the opinion that our drainage standards aren't up to what they need to be. So, we're looking at modifications there. As we get into that, it's my opinion that I think the way we currently operate, I think we're trying to carry water entirely too far in the gutters. I think there should be inlets at much closer spacing than what we have now. To minimize the amount of water that's on the road and get that water in an underground system. Not just have it be flowing down the gutter. I think we especially need to get rid of what we have in our current standards, where we allow water, we even have standards details for it, of boxes we build to allow water that is already in pipes to get discharged into the street. I don't think that's good practice. I think it may have made some sense when we're developing primarily in the hilly territory and trying to get water to go the direction you want when it wants to go another direction, and some of those things it might have made some sense. But we may be come back with some modifications there or we may not. Or you may not approve them, right? If we continue to operate the way we are and how the water is collected and ultimately discharged somewhere, then yes, the carrying capacity of that gutter is an issue that needs to be considered, so as we're revisiting this to get ready to bring it back to you later, addressing these curb types. That's a good point that Dallas brings up that we need to consider in that evaluation.
Jett: So, in making a motion on this, don't want to cut your legs up, on making a motion on this would we just read the concrete details and make a motion to approve those as is?
Webster: With the exception of 221.2 right?
Kent: If you would like to have 221 which is fine, if there is a planter strip, this is a good drawing, right? That's 221.1. 221.2 is the one that you Tom brought up, maybe this shouldn't be one of the preapproved options. If that's what you would like to include in your recommendation to city council. Is that this not be one of the preapproved options, then basically instead of saying that you could read this off exactly in your motion if you wanted to, but instead of saying 221 here you'd say 221.1 and then you'd add 221.2 to this list of ones that require approval.

Public Hearing Opened

Dallas: Dallas Buckner, private citizen, because one of the things that I thought of as far as making the ADA compliance is more widely adopting the rolled curb. Then I don't know if the city's made changes or just talked about making changes, but one of the things that prohibit it is the six-inch reinforced sidewalk behind it. Currently the city allows the rolled curb or the low-profile curb. In certain zones, I don't think it's allowed in R3. As far as keeping, the one 221.A where the sidewalk jogs around, it is fairly common in other places, but there's the issue it creates here is that the right-of-ways are a certain size and then it pushes them into the lots. It's

pretty widely adopted in other places where the smaller residential roads are. Is there a rolled curb option with just replacing the sidewalk where you could adopt that? In all residential zones and probably not major collectors and arterials,
Kent: The challenge with that is that is we don't have in either our details or the current APWA details. We don't have a true rolled curb. But any of these, like type H here, which is very similar to our current drawing here for our low profile, right? Once again, you don't get the drainage capacity and that's one of the concerns we've had with this one all along. There are places that it can make some sense, and I know had a project come through last year over at Iron Hawk Townhomes where that variance was granted to use this, even with that R3M project right? There are locations where that is a good option, and could be approved on a, let's see where did it go? If we were to use, because of the concerns with the carrying capacity of the roadway, if we wanted an option that can still carry all the water that it needs to carry, this would be that option. It's a little more challenging for drivers as they drive through it. It's very workable, it can work, especially for just, if this were at my house, I don't know that it'd bother me that much, because I am going slow when I pull in my driveway anyway. This is an option that would work that keeps the carrying capacity. The low profile really doesn't keep the carrying capacity, right?
Dallas: On this one are you removing, are you saw cutting the entire curb and repouring the whole curb versus doing a curb cut? How driveways are now
Kent: I'm sorry?
Dallas: So, if we just put a standard L curb in a subdivision and then someone wants to put this in at their driveway, you're saw cutting and repouring the entire curb to make this curb and then pouring sidewalk behind it.
Kent: Most likely you would be. You could, I don't know if a concrete sawing professional could do this.
Burgess: Nobody I know that I would trust to do it.
Kent: It would be tough because this part here is really warped. I don't know how you even do that with a straight saw blade.
Burgess: Yeah, that requires an artistry I don't think most guys have
Kent: So, you would likely be pulling the curb and gutter and replacing it, that is correct.
Jett: Can I interject one thing we were just speaking of rolled curb, and then you were speaking of changing things for more inlet, so the curbs wouldn't be carrying as much water. If we have more inlets, would a rolled curb concept work? If we replace the rolled curb and add more inlets, so we're not carrying the same capacity of water.
Kent: That certainly could work, is that the right solution I don't know. Dallas brought up the point that if we took that route, we're going to be putting more pipe in the ground which has a cost component.
Jett: Absolutely, I was thinking the rolled curb costs, could offset the cost of the traditional L curb. And offset the cost. I'm just trying to mesh the two together.
Kent: Yeah, so that is something we want to evaluate further. If you approve all of this, and we are recommended and the city council gives us final approval, this would be an option. What you see on the screen right now would be an option that we could utilize if there is a reason to utilize it, right? This could even potentially be something that someone comes in and says, we want to do our whole residential subdivision, that's all on local streets, not on any major streets, we want to just use that mountable curb on all of it or a variation. I am on the committee now, this is something that I would like to see fixed, and there is no type D any longer. There was at one time. This would be something that someone could do, they could come in with a proposal to do

something like this and just say, I've got this whole block, that is what we want to put in all the driveways are going to look like this, and we could consider that if it makes sense for that situation, we could approve that.
Jett: Is it a cheaper curb?
Kent: No, I would say probably not, it could be slightly, I don't think it's going to be significantly cheaper.
Lunt: The Carrying capacity is it any different
Kent: What you see on the screen here, it would still have the same carrying capacity because it would have the full height curb. It's not a low profile, so that sloped section that you see on the front of it is a little more aggressive, it's not as easy as gentle to drive through as our low-profile curb.
Wayne: It seems like there are a lot of ADA corners in town with seven-inch curbs that work just fine. What's the concern?
Kent: They work because we are ramping down, to get down to the landing level at the bottom, and yeah that works fine, it's the drive approaches where we have the big problem. One challenge we have all over town really is drive approaches that are difficult to drive through because they're so abrupt when you go through them. The higher the curb is the more abrupt it's going to feel when you drive through them. That's one of the reasons why we would like to have a six-inch curb as our standard curb. And have a taller curb just be an option that's used where we have a need to carry more water.
Webster: Dallas, anything else? Interesting. An hour and a half ago, I liked my driveway, now I am not sure what to think about it. Okay, we'll close the public hearing and bring it back to the commission for a recommendation.

Public Hearing Closed

Jett motions to approve the concrete details on C3 driveways, details and new notes added. Use APWA standard plans 215, 221, 221.1, and City Engineer approval required for use of standard plans 216, 225, 229, and 221.2. Davis seconds; all in favor for a unanimous vote.

CEDAR CITY COUNCIL

AGENDA ITEM – 6

TO: Mayor and City Council

FROM: City Attorney

DATE: May 18, 2026

SUBJECT: Requested Development Agreement for Cross Hollow RDO.

DISCUSSION:

I've updated the proposed development agreement to address the concerns brought up last week. Please look to Section III to see the long list of conditions put forward. Due to the large number of changes, using a redline version was not helpful. Any other changes or additions are welcome, of course.

Please consider the updated development agreement and Cross Hollow RDO.

DEVELOPMENT AGREEMENT

This Development Agreement ("Agreement") is entered into this _____day of _____ 2026 by and among the City of Cedar City, a Utah municipal corporation, hereafter referred to as "City". T&T Lee LLC, S.J.T. Properties LLC & Ong Family Trust, hereafter referred to as "Owner 1". Owner 1 is the owner of the property contained in Iron County Parcel Number B-1764-0000-0000. Sherry E Jones Trust, hereafter referred to as "Owner 2". Owner 2 is the owner of the property contained in Iron County Parcel Number B-1750-0044-0000. The Owner is the owner of 77.38 acres in Cedar City in the Cross Hollows Residential Development Overlay development (the "Project"). The City and Owner are sometimes collectively referred to in this Agreement as the "Parties".

RECITALS

A. Cedar City, acting pursuant to its authority under Utah Code Annotated §10-9a-102(2) as amended and in furtherance of its land use policies, goals, objectives, ordinances, resolutions, and regulations, has made certain determinations with respect to the Project and, in exercise of its legislative discretion, has elected to enter into this Agreement.

B. Owner is the owner of certain real property located in Cedar City, Utah and desires to develop the property and is willing to design and construct the project in a manner that is in harmony with and intended to promote the long range policies, goals, and objectives of Cedar City's general plan, zoning, and development regulations in order to receive the benefit of zoning designations under the terms of this Agreement as more fully set forth herein.

C. The Project subject to this agreement is located entirely on Iron County Parcel Numbers B-1764-0000-0000 & B-1750-0044-0000 (77.38 acres) located in the vicinity of the southeast corner of the intersection of Cross Hollow Road and Cody Drive, Cedar City, Utah, with the legal description being contained in Exhibit "A" attached hereto and incorporated herein by this reference (the "Property").

D. Parties acknowledge that the property is zoned Residential-1 (R-1). With the understanding that the parties are bound by the terms of this Agreement. This Agreement is to regulate the intended land use for any undeveloped areas within the Project.

E. The Owner may complete the Project in one or more phases pursuant to one or more complete development applications to the City for development of a portion of the Project.

F. Owner and City desire to allow the Owner to make improvements to the Property and develop the Project pursuant to City ordinance, policies, standards, and procedures.

G. The Cedar City Council has authorized the negotiation of and adoption of a development agreement which advances the policies, goals, and objectives of the Cedar City General Plan, and preserves and maintains the atmosphere desired by the citizens of the City. Moreover, the Owner has voluntarily agreed to the terms of this Agreement and hereby acknowledges the obligations to complete the Project in a manner consistent with the approval of the City Council and the regulations of the land use ordinances.

H. Consistent with the foregoing authorization and the provisions of Utah State law, the City's governing body has authorized execution of this Agreement by Resolution ***Resolution Number***, a copy of which is attached to this Agreement as Exhibit "B".

AGREEMENT

NOW, THEREFORE, FOR GOOD AND VALUABLE CONSIDERATION, THE RECEIPT AND SUFFICIENCY OF WHICH IS HEREBY ACKNOWLEDGED, IT IS AGREED AS FOLLOWS:

I. Recitals.

The recitals set forth above are incorporated herein by this reference.

II. Exhibits.

The Exhibits and attachments are intended to be included as if in the body of this Agreement and regulated as such:

- Exhibit A - Legal Description of Property
- Exhibit B - Adopting Resolution

III. Owner Obligations.

A. Completion of the Project. Owner agrees to construct and complete the RDO in accordance with City Ordinance and the concurrently approved RDO. Nothing in this agreement is intended to modify any requirements of City Ordinance except as specifically modified herein or any of the terms of the RDO. In addition, the Parties hereby agree to satisfy all conditions imposed by this Agreement, namely:

i. Pod 1 Conditions:

a. Pod 1 is limited to a maximum unit count of 250 residential units.

b. With Phase 1, Owner will construct a six-foot, sight-obscuring masonry wall along Cody Drive, except as needed to meet appropriate sight distances at approved intersections with project entry road locations.

c. Phase 1 of development within Pod 1 shall be limited to single-family residential uses and shall include a minimum of 15 single-family residential units. Developer reserves the right to determine the specific single-family product type within Pod 1, including traditional single-family lots, small-lot single-family homes, patio homes, or similar single-family residential products allowed within the approved RDO/PUD framework. Said 15 single-family residential units will be constructed adjacent to Cody Drive and continue south until said minimum is reached. Nothing herein shall prevent Owner from constructing additional single-family homes in Pod 1 beyond the minimum units required near Cody Drive.

d. If Owner elects to use a small-lot single-family product, the applicable development standards may include a minimum lot size of 4,500 square feet, a 22-foot front setback to garage, a 20-foot front setback to the main

structure, and side and rear setbacks as required by Fire Code. Where a lot abuts a public right-of-way, a minimum 20-foot setback shall apply along the public right-of-way. Setbacks along private streets shall be determined based on the applicable front, side, or rear yard condition, and a side yard along a private street may be reduced to 5 feet, except along primary access roads where a minimum 10-foot setback shall be required for the required public utility easement.

e. Guest parking shall not be required for single-family homes constructed on lots meeting the required setbacks on each lot. Guest parking shall be required for all other construction, including, but not limited to any patio homes.

f. The final plat for Phase 1 must be approved by City staff and construction of public improvements begun before the City will consider additional phases in Pod 1.

g. No driveways or rear-lot access points shall be allowed along Cody Drive.

h. No apartments will be allowed in Phase 1.

i. Owner shall design Phase 1 to discourage overnight parking on Cody Drive.

ii. Pod 2 conditions:

a. Owner intends to dedicate the majority of Pod 2 to the City as natural open space. The precise dedication area is not yet fixed but is expected to range from approximately 30 to 49 acres, with the final acreage and boundaries to be determined after recordation of the applicable final plat(s) for Pod 2.

b. Prior to dedication of the Pod 2 open space to the City, Developer shall complete an initial fire fuel mitigation treatment within the proposed open space area incompliance with the Wildland Urban Interface (WUI) standards. Upon completion of the initial fire mitigation treatment and final determination of the dedication boundaries, the open space shall be dedicated to Cedar City Corporation, subject to City review and acceptance.

c. Owner shall provide public trail access to the dedicated open space from both upper road areas. Such access shall be provided by separate 20-foot-wide public trail access parcels, or similar dedicated access corridors acceptable to the City, located to provide community access from each road to the public open space.

d. Development within Pod 2 shall be subject to the R-1 zoning requirements and shall be restricted to a maximum of twenty (20) single-family residential lots.

e. The Parties acknowledge that development of Pod 2 will require completion and extension of the existing dead-end stub roads, including Sunnyvale Drive and Church Street.

iii. Pod 3 conditions:

a. Pod 3 is limited to a maximum of 80 residential units.

b. Pod 3 shall be permitted to develop with a single access point, provided that such access is located to align with the future signalized intersection along the Project frontage, subject to final engineering and traffic study review.
c. Future amendments to City ordinances, design standards, or access requirements shall not reduce the vested unit count or require a second access for Pod 3, provided the development remains consistent with the approved RDO, this Agreement, the approved traffic study, and applicable public safety requirements in effect at the time of approval.
d. Apartments are allowed in Pod 3 and only Pod 3.

iv. Storm Drain Facilities

a. The Parties acknowledge that the City's adopted 2023 Stormwater Master Plan identifies storm drainage facilities, including facilities with approximate storage capacities of 5 acre-feet and 8 acre-feet, within or affecting the RDO Property.
b. Owner agrees to dedicate the land area necessary for the regional storm drainage basin facilities located on the RDO Property to Cedar City Corporation at no cost to the City, subject to final design, final platting, and acceptance by the City.
c. The Parties acknowledge that the City will reimburse Owner, pursuant to City ordinance, for any portion(s) of the storm drain facilities not required to serve or protect Owner's property and development.
d. The northern detention basin shall be constructed as part of Phase 1 in Pod 1, and no additional phases shall be recorded in Pod 1 until the northern detention basis is accepted by the City.
e. The southern storm drain facilities shall be constructed prior to or as part of any phase that adds to storm drain needs or requires the southern storm drain facilities to protect the developing phase.

v. Traffic Study

a. Owner shall prepare a traffic study based on the maximum number of residential units allowed under the approved RDO. The results of the traffic study, together with any approved modifications to the City's master planned road network, shall govern the roadway improvements or traffic mitigation measures required for the Project.
b. Owner acknowledges that construction of the RDO-approved units could be limited if the traffic study shows the transportation systems available are inadequate, even with mitigation improvements, for the additional units and/or the location of the units, when added to what the City's General Plan already allows in the area.
c. Owner shall be responsible for mitigation improvements required as a result of Project-generated traffic, as determined by the approved traffic study.
d. The Parties acknowledge that the City will reimburse Owner, pursuant to City ordinance, for any portion(s) of the transportation improvements not required to serve Owner's property and development.

vi. Private amenities within the expected future PUD(s) shall include ....[list specific amenities desired].

vii. No sections of required landscaping shall consist solely of gravel, but shall include trees and other plants at regular intervals as approved by the City's Engineering Department..

viii. Except as otherwise stated herein, Owner agrees to satisfy all other requirements and conditions imposed by the City Council pursuant to the City's ordinances, policies, standards, and procedures. Owner acknowledges that over time City ordinances, policies, standards, and procedures may change. Owner's vesting rights in City ordinances, policies, standards, and procedures will be determined by City ordinance and the laws of the state of Utah.

IV. Vested Rights and Reserved Legislative Powers.

A. Zoning; Vested Rights. To the maximum extent permissible under the laws of Utah and the United States and at equity, the Parties intend that this Agreement grants Owner all rights to use this property as allowed by this Agreement, but the Parties do not intend to modify, amend, or abridge any of the codes, rules, requirements, benefits, or obligations found within the City's ordinances and the RDO. As of the date of this Agreement, the Parties confirm that the use reflected in this Agreement is agreed upon despite being inconsistent with City's Zo ning Ordinance

B. Reserved Legislative Powers. Owner acknowledges that the City is restricted in its authority to limit its police power by contract and that the limitations, reservations and exceptions set forth herein are intended to reserve to the City all of its police power that cannot be so limited. Notwithstanding the retained power of the City to enact such legislation under the police powers, such legislation shall only be applied to modify the vested rights of Owner with respect to use under the zoning designations of this Agreement based upon the policies, facts and circumstances meeting the compelling, countervailing public interest exception to the vested rights doctrine in the State of Utah, which the City's land use authority finds, on the record, are necessary to prevent a physical harm to third parties, which harm did not exist at the time of the execution of this Agreement, and which harm, if not addressed, would jeopardize a compelling, countervailing public interest pursuant to Utah Code Ann. 10-9a-509(1)(a)(i), as proven by the City by clear and convincing evidence. Any such proposed change affecting the vested rights of the Project shall be of general application to all development activity in the City; and, unless in good faith the City declares an emergency, Owner shall be entitled to prior written notice and an opportunity to be heard with respect to the proposed change and its applicability to the Project under the compelling, countervailing public interest exception to the vested rights doctrine.

C. Application under City's Future Laws. "Future Laws" means the ordinances, policies, standards, and procedures which may be in effect as of a particular time in the future when a

development application is submitted for a part of the Project and which may or may not be applicable to the development application depending upon the provisions of this Agreement. Without waiving any rights granted by this Agreement, Owner may at any time, choose to submit a development application for the entire Project under the City's Future Laws in effect at the time of the development application so long as Owner is not in current breach of this Agreement.

V. Term.

This Agreement shall be effective as of the date of execution, and upon recordation, shall run with the land and shall continue in full force and effect until all obligations hereunder have been fully performed and all rights hereunder fully exercised; provided, however, that unless the Parties mutually agree to extend the term, this Agreement shall not extend further than a period of twenty (20) years from its date of recordation in the official records of the Iron County Recorder's Office.

VI. General Provisions.

A. Notices. All notices, filings, consents, approvals, and other communication provided for herein or given in connection herewith shall be in writing and shall be sent registered or certified mail to:

If to City: Cedar City Corporation
10 N. Main St.
Cedar City, Utah 84720

If to Owner:
T & T LEE L L C
8820 GREENSBORO LANE
LAS VEGAS, NV 89134

JONES SHERRY E TRUST
4355 N TALMADGE DR
SAN DIEGO, CA 92116

Any such change of address shall be given at least ten (10) days before the date on which the change is to become effective.

B. Mailing Effective. Notices given by mail shall be deemed delivered upon deposit with the U.S. Postal Service in the manner set forth above. Notices that are hand delivered or delivered by nationally recognized overnight courier shall be deemed delivered upon receipt.

C. Waiver. No delay in exercising any right or remedy shall constitute a waiver thereof and no waiver by the parties of the breach of any provision of this Agreement shall be construed as a waiver of any preceding or succeeding breach by the same of any other provision of this Agreement.

D. Headings. The descriptive headings of the paragraphs of this Agreement are inserted for convenience only and shall not control or affect the meaning or construction of any provision this Agreement.

E. Authority. The Parties to this Agreement represent to each other that they have full power and authority to enter into this Agreement, and that all necessary actions have been taken to give full force and effect to this Agreement. Owner represents and warrants that each party is fully formed and validly existing under the laws of the State of Utah, and that each party is duly qualified to do business in the State of Utah and each is in good standing under applicable state laws. The Owner and the City warrant to each other that the individuals executing this Agreement on behalf of their respective parties are authorized and empowered to bind the parties on whose behalf each individual is signing.

F. Entire Agreement. This Agreement, including exhibits, constitutes the entire Agreement between the Parties.

G. Amendment of this Agreement. This Agreement may be amended in whole or in part with respect to all or any portion of the Property by the mutual written consent of the Parties to this Agreement or by their successors in interest or assigns. Any such amendment of this Agreement shall be recorded in the official records of the Iron County Recorder's Office. The Parties agree to, in good faith, apply for, grant, and approve such amendments to this Agreement as may be necessary or reasonably required for future phases consistent with this Agreement and with the approval granted by the Cedar City Council.

H. Severability. If any of the provisions of this Agreement are declared void or unenforceable, such provision shall be severed from this Agreement, which shall otherwise remain in full force and effect, provided that the fundamental purpose of this Agreement and the Owner's ability to complete the Project is not defeated by such severance.

I. Governing Law. The laws of the State of Utah shall govern the interpretation and enforcement of the Agreement. The Parties shall agree that the venue for any action commenced in connection with this Agreement shall be proper only in a court of competent jurisdiction located in Iron County, Utah, and the Parties hereby waive any right to object to such venue.

J. Remedies. If any party to this Agreement breaches any provision of this Agreement, the non-defaulting party shall be entitled to all remedies available at both law and in equity.

K. Attorney's Fee and Costs. If any party brings legal action either because of a breach of the Agreement or to enforce a provision of the Agreement, the prevailing party shall be entitled to reasonable attorney's fees and court costs.

L. Binding Effect. The benefits and burdens of this Agreement shall be binding upon and shall inure to the benefit of the Parties hereto and their respective heirs, legal representatives, successors in interest and assigns.

M. Assignment. The rights of the Owner under this Agreement may be transferred or assigned, in whole or in part. Owner shall give notice to the City of any assignment at least thirty (30) days prior to the effective date of the assignment. The provisions of this paragraph shall not prohibit the granting of any security interests for financing the acquisition and development of the Project, subject to the Owner complying with applicable law and the requirements of this Agreement. The provisions of this paragraph shall also not prohibit Owner's sale of completed subdivision lots within the Project.

N. Third Parties. There are no third-party beneficiaries to this Agreement, and no person or entity not a party hereto shall have any right or cause of action hereunder.

O. No Agency Created. Nothing contained in the Agreement shall create any partnership, joint venture, or agency relationship between the Parties.

[Signatures on following pages]

IN WITNESS WHEREOF, the parties have executed this Agreement as of the day and year set forth above:

OWNER:

T&T LEE LLC, S.J.T. PROPERTIES LLC & ONG FAMILY TRUST

By:_____

Printed Name: KENNETH ONG

Title: _____

STATE OF)

:ss.

COUNTY OF)

On this _____ day of _____ 2026, _____personally appeared before me and duly acknowledged to me that s/he signed the above and foregoing document.

_____

NOTARY PUBLIC

SHERRY E JONES TRUST

By:_____

Printed Name:_____

Title: _____

STATE OF)

:ss.

COUNTY OF)

On this _____ day of _____ 2026, _____personally appeared before me and duly acknowledged to me that s/he signed the above and foregoing document.

_____

NOTARY PUBLIC

CITY:

_____

STEVE NELSON

MAYOR

[SEAL]

ATTEST:

_____

RENON SAVAGE

CITY RECORDER

STATE OF UTAH)

:ss.

COUNTY OF IRON)

This is to certify that on the ____ day of _____ 2026, before me, the undersigned, a Notary Public, in and for the State of Utah, duly commissioned and sworn as such, personally appeared Steve Nelson, known to me to be the Mayor of Cedar City Corporation, and Renon Savage, known to me to be the City Recorder of Cedar City Corporation, and acknowledged to me that he the said Steve Nelson and she the said Renon Savage executed the foregoing instrument as a free and voluntary act and deed of said corporation, for the uses and purposes therein, and on oath state that they were authorized to execute said instrument, and that the seal affixed is the corporate seal of said corporation.

IN WITNESS WHEREOF, I have hereunto set my hand and affixed my official seal the day and year hereinabove written.

_____

NOTARY PUBLIC

Exhibit A

RDO BOUNDARY DESCRIPTION

BEGINNING AT THE SOUTH QUARTER CORNER SECTION 16, TOWNSHIP 36 SOUTH, RANGE 11 WEST, SALT LAKE BASE AND MERIDIAN; THENCE S88°34'02"W, ALONG THE SECTION LINE 1829.21 FEET; THENCE ALONG THE NORTH RIGHT OF WAY CROSS HOLLOW ROAD THE FOLLOWING FOUR CALLS N62°22'25"W, 52.79 FEET TO A POINT OF CURVATURE TO THE LEFT HAVING A RADIUS OF 650.00 FEET AND A CENTRAL ANGLE OF 11°33'38"; THENCE ALONG THE ARC OF SAID CURVE 131.15 FEET; THENCE N73°56'03"W, 198.62 FEET TO A POINT OF CURVATURE TO THE RIGHT HAVING A RADIUS OF 549.96 FEET AND A CENTRAL ANGLE OF 06°58'34"; THENCE ALONG THE ARC OF SAID CURVE 66.96 FEET; THENCE N00°00'00"E, 921.50 FEET; THENCE N89°53'22"E, 20.07 FEET; THENCE N00°06'13"W, 1227.48 FEET TO A POINT ON THE SOUTH R.O.W CODY DR.; THENCE N89°05'42"E, ALONG CODY DR. 658.94 FEET TO A POINT OF CURVATURE TO THE RIGHT HAVING A RADIUS OF 270.00 FEET AND A CENTRAL ANGLE OF 23°57'24"; THENCE ALONG THE ARC OF SAID CURVE 112.89 FEET; THENCE DEPARTING CODY DRIVE S24°03'27"W, 925.24 FEET; THENCE S06°12'26"W, 254.31 FEET; THENCE S61°20'51"E, 629.35 FEET; THENCE N00°02'58"E, 303.49 FEET TO A POINT ON THE CARMEL CANYON ESTATES PUD SUBDIVISION; THENCE ALONG SAID CARMEL SUBDIVISION THE FOLLOWING FIVE CALLS N68°57'03"E, 251.46 FEET; THENCE N66°23'41"E, 498.46 FEET; THENCE S74°20'31"E, 369.17 FEET; THENCE N66°15'00"E, 250.59 FEET; THENCE S89°47'51"E, 45.09 FEET TO A POINT ON THE NORTH-SOUTH QUARTER SECTION LINE; THENCE S00°12'09"W, ALONG SAID QUARTER LINE 1437.82 FEET TO THE POINT OF BEGINNING.

CONTAINING 77.38 ACRES MORE OR LESS.

Exhibit B

Adopting Resolution

CEDAR CITY ORDINANCE NO. 0513-26

AN ORDINANCE OF THE CEDAR CITY COUNCIL ADOPTING THE RESIDENTIAL DEVELOPMENT OVERLAY (RD0) PLAN FOR THE CROSS HOLLOW RDO LOCATED ON APPROXIMATELY 77.38 ACRES OF PROPERTY LOCATED IN THE AREA OF CODY DRIVE AND CROSS HOLLOW ROAD.

WHEREAS, the owners of property located in the vicinity of Cody Drive and Cross Hollow Road have petitioned Cedar City to adopt the Residential Development Overlay (RDO) plan on approximately 77.38 acres of property, the property is more particularly described as shown in the Cross Hollow RDO, attached as Exhibit A:

WHEREAS, after providing public notice as required by City ordinance the Cedar City Planning Commission considered the proposed RDO plan adoption and found that the adoption is reasonably necessary, in the best interest of the public, and in harmony with the objectives and purposes of Cedar City's zoning ordinance. On April 21, 2026, the Planning Commission gave the proposed RDO plan adoption a positive recommendation conditioned upon the petitioner's agreement that they will not put any more units on this property than what the approved RDO plan allows;

WHEREAS, the landowner consents that Cedar City adopt the RDO on the above described property and the landowner further agrees to limit the total number of dwelling units constructed within the RDO boundary to the number units allowed and number of dwelling units within each pod according to the designated zoning on the RDO plan and as referenced in the table on the RDO plan, said plan included in this ordinance by reference and binding upon all parties;

WHEREAS, the City Council after duly publishing and holding a public hearing to consider the proposed RDO plan finds the proposed RDO plan furthers the City's policy of establishing and maintaining sound, stable, and desirable development within the City, promoting more fully the objectives and purposes of the City's general plan, zoning ordinances, and/or correcting manifest errors.

NOW THEREFORE BE IT ORDAINED by the City Council of Cedar City, State of Utah, that the City's general plan is amended to adopt the RDO plan on the approximately 77.38 acres described herein, and City staff is hereby directed to make the necessary changes to the City's land use map; showing the Cross Hollow RDO name and boundary on the city's land use maps. The City Council approves the RDO and Development Agreement with all the terms and conditions contained in the RDO plan, attached as Exhibit A, and Development Agreement, attached as Exhibit B.

This ordinance, Cedar City Ordinance No. 0513-26, shall become effective immediately upon passage by the City Council and published in accordance with State Law.

Council Vote:

Phillips -
Cox -
Wilkey -
Schmidt -
Galan -

Dated this _____ day of May, 2026.

STEVEN NELSON
MAYOR

[SEAL]
ATTEST:

RENON SAVAGE
RECORDER

CEDAR CITY COUNCIL
AGENDA ITEM 7

INFORMATION SHEET

TO: **Mayor and City Council**

FROM: **Eric Witzke**

DATE: **May 20, 2026**

SUBJECT: **Blanket Contracts FY 2027**

DISCUSSION: These are the Public Works' yearly Blanket Contracts for FY 2027 that were sent out to bidders. They were advertised on April 2nd, 5th, 9th, & 12th 2026. All Blanket Contract bids were due back to Public Works by NOON Wednesday, April 29th, 2026.

Included are the bid tabulations for the various contract bids that were up for renewal and apparent low bidders for each category for your approval.

CEDAR CITY CORPORATION
BID TABULATION
BLANKET CONTRACTS FY 2027 (JULY 2026 - JUNE 2027)

PAVEMENT MARKING

ITEM NUMBER	DESCRIPTION	UNIT	QUANTITY	SIGNATURE STRIPING UNIT COST	TOTAL AMOUNT	STRAIGHT STRIPE PAINTING, INC UNIT COST	TOTAL AMOUNT
1	Mobilization	L.S.	3	$ 400.00	$ 1,200.00	$ 500.00	$ 1,500.00
2	8" Line	L.F.	1,000	$ 0.30	$ 300.00	$ 0.50	$ 500.00
3	4" Line	L.F.	5,000	$ 0.25	$ 1,250.00	$ 0.25	$ 1,250.00
4	6" Single Solid - Aviation Grade	L.F.	10,000	$ 0.23	$ 2,300.00	$ 0.20	$ 2,000.00
5	6" Double Solid - Aviation Grade	L.F.	15,000	$ 0.40	$ 6,000.00	$ 0.40	$ 6,000.00
6	White Paint - Aviation Grade	SQ.FT	140,000	$ 0.19	$ 26,600.00	$ 0.08	$ 11,200.00
7	Black Paint - Aviation Grade	SQ.FT	8,500	$ 0.19	$ 1,615.00	$ 0.20	$ 1,700.00
8	Red Paint - Aviation Grade	SQ.FT	2,500	$ 0.19	$ 475.00	$ 0.20	$ 500.00
9	4" Miscellaneous Hash Line	L.F.	1,000	$ 0.20	$ 200.00	$ 0.30	$ 300.00
10	4" x 20" Parking Lot Space Lines	Each	500	$ 4.25	$ 2,125.00	$ 6.00	$ 3,000.00
11	14" x 7.5' Through Lane Use Arrows	Each	10	$ 20.00	$ 200.00	$ 25.00	$ 250.00
12	14" x 7' Turn Lane Use Arrows	Each	10	$ 20.00	$ 200.00	$ 25.00	$ 250.00
13	14" x 10.5' Turn and Through Lane Use Arrows	Each	5	$ 35.00	$ 175.00	$ 40.00	$ 200.00
14	18" x 8' School Crosswalk/Ladder Runs	Each	205	$ 25.00	$ 5,125.00	$ 42.00	$ 8,610.00
15	12" Wide Crosswalk Lines	L.F.	400	$ 1.75	$ 700.00	$ 2.00	$ 800.00
16	4' x 5' Handicapped Parking Space Marking	Each	20	$ 25.00	$ 500.00	$ 25.00	$ 500.00
17	8" x 20' Railroad Crossing Marking	Each	10	$ 75.00	$ 750.00	$ 100.00	$ 1,000.00
18	30" x 8" Elongated Letter Marking	Each Letter	20	$ 10.00	$ 200.00	$ 25.00	$ 500.00
19	12" x 12" Squares	Each	1,000	$ 1.50	$ 1,500.00	$ 0.10	$ 100.00
20	3'3" X 5'9" Bike Lane Symbols	Each	30	$ 20.00	$ 600.00	$ 20.00	$ 600.00
21	2' x 6' Bike Lane Arrows	Each	30	$ 15.00	$ 450.00	$ 15.00	$ 450.00
22	Red Curb	L.F.	2,000	$ 1.65	$ 3,300.00	$ 1.00	$ 2,000.00
23	Remove Pavement Markings with Paint	Per Hour	1	$ 200.00	$ 200.00	$ 200.00	$ 200.00
23a	Remove Pavement Markings with High-Pressure Wash	Per Hour	1	$ 200.00	$ 200.00	$ 350.00	$ 350.00
23b	Remove Pavement Markings with Sand Blasting	Per Hour	1	$ 250.00	$ 250.00	$ 200.00	$ 200.00
24	Layout	Per Hour	1	$ 140.00	$ 140.00	$ 175.00	$ 175.00
25	24" Stop Bar	L.F.	1,000	$ 3.25	$ 3,250.00	$ 3.00	$ 3,000.00
26	12" Stop Bar	L.F.	1,000	$ 1.75	$ 1,750.00	$ 2.00	$ 2,000.00
	TOTAL BID				$ 61,555.00		**$ 49,135.00**

Apparent Low Bidder: STRAIGHT STRIPE PAINTING, INC

CEDAR CITY CORPORATION
BID TABULATION
BLANKET CONTRACTS FY 2027 (JULY 2026 - JUNE 2027)

SMALL CONCRETE PROJECTS

ITEM NUMBER	DESCRIPTION	UNIT	QUANTITY	SOUTHERN UTAH PAVING UNIT COST	SOUTHERN UTAH PAVING TOTAL AMOUNT	GLEAVE CONCRETE UNIT COST	GLEAVE CONCRETE TOTAL AMOUNT
1	30-Inch Curb & Gutter Type A (Machine Placed)	LF	100	$ 29.00	$ 2,900.00	$ 31.00	$ 3,100.00
2a	30-Inch Curb & Gutter Type A (Hand Placed - Up to 40')	LF	40	$ 29.00	$ 1,160.00	$ 31.00	$ 1,240.00
2b	30-Inch Curb & Gutter Type A (Hand Placed - 40' to 100')	LF	100	$ 29.00	$ 2,900.00	$ 31.00	$ 3,100.00
3a	36-Inch Curb & Gutter Type C (Hand Placed - Up to 40')	LF	40	$ 29.00	$ 1,160.00	$ 31.00	$ 1,240.00
3b	36-Inch Curb & Gutter Type C (Hand Placed - 40' - 100')	LF	100	$ 29.00	$ 2,900.00	$ 31.00	$ 3,100.00
4a	Concrete Sidewalk (4" Thick) (Adjacent to Curb & Gutter)	S.F.	1,000	$ 7.00	$ 7,000.00	$ 7.40	$ 7,400.00
4b	Concrete Sidewalk (4" Thick) (Adjacent to Parkstrip)	S.F.	1,000	$ 7.00	$ 7,000.00	$ 8.00	$ 8,000.00
5	Concrete Drive Approach, Residential (6" Thick)	S.F.	1,000	$ 7.00	$ 7,000.00	$ 8.25	$ 8,250.00
6	Concrete Drive Approach, Commercial (6" Thick)	S.F.	500	$ 12.50	$ 6,250.00	$ 8.25	$ 4,125.00
7	6' Wide Concrete Waterway (8" Thick Re-inforced) 5,000 psi	S.F.	1,500	$ 12.50	$ 18,750.00	$ 10.75	$ 16,125.00
8	Handicap Accessible Ramp	S.F.	800	$ 7.00	$ 5,600.00	$ 8.00	$ 6,400.00
9	Small Structures Less Than 1 C.Y. (Includes Forming, Concrete & Rebar	C.Y.	<1 CY	$ 1,250.00	$ 1,250.00	$ 1,500.00	$ 1,500.00
10	Small Structures More Than 1 C.Y. (Includes Forming, Concrete & Rebar)	C.Y.	>1CY	$ 1,250.00	$ 1,250.00	$ 1,500.00	$ 1,500.00
11	Water Jobs (Sidewalk, Pad, Collar) (See Work Description and Detail Pg. 256	L.S. Each	40	$ 25.00	$ 1,000.00	$ 29.50	$ 1,180.00
12	Bond Cost Amount	L.S.	2	$ 2,500.00	$ 5,000.00	$ 5,000.00	$ 10,000.00
	TOTAL BID				**$ 71,120.00**		$ 76,260.00

Only One Bid - Apparent Low Bidder: SOUTHERN UTAH PAVING

CEDAR CITY CORPORATION
BID TABULATION
BLANKET CONTRACTS FY 2027 (JULY 2026- JUNE 2027)

INSTALLED ASPHALT

ITEM NUMBER	DESCRIPTION	UNIT	QUANTITY	ASHDOWN BROTHERS CONSTRUCTION INC. UNIT COST	TOTAL AMOUNT
1	½ to 1-inch, Average ¾-inch Thick Laydown Machine Skin Patch	TON	<25	$ 160.00	$ 4,000.00
1a	½ to 1-inch, Average ¾-inch Thick Laydown Machine Skin Patch	TON	>25<250	$ 135.00	$ 33,750.00
2	1 to 3-inch, Average 1 ½-inch Thick Laydown Machine Skin Patch	TON	<100	$ 125.00	$ 12,500.00
3	2 to 3-inch, Average 1 ½-inch Thick Laydown Machine Skin Patch	TON	>100<500	$ 115.00	$ 57,500.00
4	2-inch Thick Asphalt Mat (Hand Spread)	S.F.	<500	$ 5.75	$ 2,875.00
5	2-inch Thick Asphalt Mat (Machine Spread)	S.F.	40,000	$ 1.45	$ 58,000.00
5a	2-inch Thick Asphalt Mat (Machine Spread)	S.F.	20,000	$ 1.55	$ 31,000.00
5b	2-inch Thick Asphalt Mat (Machine Spread)	S.F.	10,000	$ 1.65	$ 16,500.00
5c	2-inch Thick Asphalt Mat (Machine Spread)	S.F.	5,000	$ 1.95	$ 9,750.00
6	2 ½-inch Thick Asphalt Mat (Hand Spread)	S.F.	<500	$ 6.25	$ 3,125.00
7	2 ½-inch Thick Asphalt Mat (Machine Spread)	S.F.	15,000	$ 1.75	$ 26,250.00
7a	2 ½-inch Thick Asphalt Mat (Machine Spread)	S.F.	10,000	$ 1.85	$ 18,500.00
7b	2 ½-inch Thick Asphalt Mat (Machine Spread)	S.F.	5,000	$ 2.00	$ 10,000.00
8	3-inch Thick Asphalt Mat (Hand Spread)	S.F.	<500	$ 6.75	$ 3,375.00
9	3-inch Thick Asphalt Mat (Machine Spread)	S.F.	10,000	$ 2.20	$ 22,000.00
9a	3-inch Thick Asphalt Mat (Machine Spread)	S.F.	5,000	$ 2.40	$ 12,000.00
10	Tack-coat	GALLON	1.0	$ 6.00	$ 6.00
11	Flush-coat	GALLON	1.0	$ 6.00	$ 6.00
12	Bond Cost Amount	L.S.	2	$ 1,900.00	$ 3,800.00
	TOTAL BID				**$ 324,937.00**

Only One Bid - Apparent Low Bidder: ASHDOWN BROTHERS CONSTRUCTION INC.

CEDAR CITY CORPORATION
BID TABULATION
BLANKET CONTRACTS FY 2027 (JULY 2026 - JUNE 2027)

STREET MATERIALS SUPPLY CONTRACT

ITEM NUMBER	DESCRIPTION	UNIT	MEL CLARKE INC. UNIT COST	SUNCORE CONSTRUCTION & MATERIALS UNIT COST	ASHDOWN BROTHERS CONSTRUCTION INC. UNIT COST	WESTERN ROCK UNIT COST
1	Road Base Material	TON	**$ 6.50**	$ 8.75	$ -	$ 7.90
2	Sand Material (Cyclone or Equivalent)	TON	$ -	**$ 8.50**	$ -	$ -
3	Bituminous Surface Course Material (Hot Mix)	TON	$ -	$ 78.00	**$ 71.50**	$ 72.00
4	Bituminous Surface Course Material (Cold Mix)	TON	$ -	$ -	$ -	$ -
5	Bituminous Surface Course Material (UPM or Equivalent)	TON	$ -	$ -	**$ 160.00**	$ -
6	Flowable Backfill Material (City Specifications)	CY	$ -	**$ 131.50**	$ -	$ 145.00
7	Flowable Backfill Material (Sand Only, No Additives)	CY	$ -	**$ 123.50**	$ -	$ 125.00
8	Portland Cement Concrete Material (Class A)	CY	$ -	$ 193.50	$ -	**$ 175.00**
9	Portland Cement Concrete Material (Class C)	CY	$ -	$ 188.50	$ -	**$ 181.00**
10	Ready Mix, "Short Load Quantity"	CY	$ -	$ 150.00	$ -	**$ 75.00**
11	Road Chips (2,000 Ton +/-) Type I per Cedar City Specifications	TON	**$ 23.00**	$ -	$ -	$ -
12	Type II per Cedar City Specifications	TON	$ -	$ -	$ -	**$ 27.00**
13	Type II Micro Surfacing Aggregate	TON	$ -	$ -	$ -	$ -
14	Type III Micro Surfacing Aggregate	TON	$ -	$ -	$ -	$ -
15	Leach Rock	TON	$ 20.00	**$ 19.00**	$ -	$ 22.00
16	Top Soil	TON	**$ 4.50**	$ 12.00	$ -	$ -
17	1" Minus Rock	TON	$ 20.00	**$ 18.00**	$ -	$ 25.75
18	Pea Gravel	TON	$ -	$ -	$ -	**$ 21.55**
19	6" Minus Rock	TON	**$ 20.00**	$ -	$ -	$ -
20	12" Minus Rock	TON	**$ 30.00**	$ -	$ -	$ -

Low Bidder on each item is highlighted and shown in bold above

CEDAR CITY CORPORATION
BID TABULATION
BLANKET CONTRACTS FY 2027 (JULY 2026 - JUNE 2027)

CRACK SEALANT/ASPHALT CHIP SEAL OIL MATERIALS SUPPLY AND DELIVERY CONTRACT

ITEM NUMBER	DESCRIPTION	UNIT	QUANTITY	MAXWELL PRODUCTS UNIT COST	MAXWELL PRODUCTS TOTAL AMOUNT	PEAK ASPHALT LLC UNIT COST	PEAK ASPHALT LLC TOTAL AMOUNT	ASPHALT SYSTEMS INC. UNIT COST	ASPHALT SYSTEMS INC. TOTAL AMOUNT	
1	Provide and Transport QSE 2:1 Dilution	TON	100	$ -	$ -	**$ 480.00**	**$ 48,000.00**	$ -	$ -	
2	Provide and Transport LMCRS-2h, Asphalt	TON	400	$ -	$ -	**$ 710.00**	**$ 284,000.00**	$ -	$ -	
3	Provide and Transport P.A.S.S.	TON	100	$ -	$ -	**$ 740.00**	**$ 74,000.00**	$ -	$ -	
4	Provide and Transport CQS-1h 2:1 Dilution	TON	100	$ -	$ -	**$ 480.00**	**$ 48,000.00**	$ -	$ -	
4A	Provide & Transport CQS-1h Concentrate	TON	100	$ -	$ -	**$ 605.00**	**$ 60,500.00**	$ -	$ -	
5	Provide and Transport LMCQS-1h 2:1 Dilution	TON	100	$ -	$ -	$ -	$ -	$ -	$ -	
6	Provide and Transport PMCQS-1h 2:1 Dilution	TON	100	$ -	$ -	$ -	$ -	$ -	$ -	
7	Provide and Transport GSB-88 Emulsified Sealer/Binder 2:1 Dilution	TON	100	$ -	$ -	$ -	$ -	**$ 1,104.00**	**$ 110,400.00**	
7A	GSB-88 Emulsified Sealer/Binder 1:1 Diluton	TON	100	$ -	$ -	$ -	$ -	**$ 863.00**	**$ 86,300.00**	
8	GSB-78 Pavement Sealer and Rejuvenator	TON	100	$ -	$ -	$ -	$ -	**$ -**	**$ -**	
9	GM-RSS Modified Rejuvenating Emulsion	TON	100	$ -	$ -	$ -	$ -	**$ 983.00**	**$ 98,300.00**	
10	Provide and Transport Elasto-Flex 650 or Equivalent	TON	100	$ 1,080.00	$ 108,000.00	$ -	$ -	$ -	$ -	
11	Provide and Transport No Box Hot Applied Sealant	TON	100	$ 1,120.00	$ 112,000.00	$ -	$ -	$ -	$ -	
12	Provide and Transport No Box Mastic	TON	100	$ 1,220.00	$ 122,000.00	$ -	$ -	$ -	$ -	
13	Transport Stand-By Time	HOUR	30	$ -	$ -	$ 150.00	$ 4,500.00	**$ 150.00**	**$ 4,500.00**	**1st 4 hours free**

ITEM NUMBER	DESCRIPTION	UNIT	QUANTITY	NUROCK ASPHALT UNIT COST	NUROCK ASPHALT TOTAL AMOUNT	CRAFCO INC UNIT COST	CRAFCO INC TOTAL AMOUNT
1	Provide and Transport QSE 2:1 Dilution	TON	100	$ 515.00	$ 51,500.00	$ -	$ -
2	Provide and Transport LMCRS-2h, Asphalt	TON	400	$ 734.00	$ 293,600.00	$ -	$ -
3	Provide and Transport P.A.S.S.	TON	100	$ -	$ -	$ -	$ -
4	Provide and Transport CQS-1h 2:1 Dilution	TON	100	$ 505.00	$ 50,500.00	$ -	$ -
4A	Provide & Transport CQS-1h Concentrate	TON	100	$ -	$ -	$ -	$ -
5	Provide and Transport LMCQS-1h 2:1 Dilution	TON	100	$ -	$ -	$ -	$ -
6	Provide and Transport PMCQS-1h 2:1 Dilution	TON	100	$ -	$ -	$ -	$ -
7	Provide and Transport GSB-88 Emulsified Sealer/Binder 2:1 Dilution	TON	100	$ -	$ -	$ -	$ -
7A	GSB-88 Emulsified Sealer/Binder 1:1 Diluton	TON	100	$ -	$ -	$ -	$ -
8	GSB-78 Pavement Sealer and Rejuvenator	TON	100	$ -	$ -	$ -	$ -
9	GM-RSS Modified Rejuvenating Emulsion	TON	100	$ -	$ -	$ -	$ -
10	Provide and Transport Elasto-Flex 650 or Equivalent	TON	100	$ -	$ -	**$ 960.00**	**$ 96,000.00**
11	Provide and Transport No Box Hot Applied Sealant	TON	100	$ -	$ -	**$ 1,040.00**	**$ 104,000.00**
12	Provide and Transport No Box Mastic	TON	100	$ -	$ -	**$ 1,060.00**	**$ 106,000.00**
13	Transport Stand-By Time	HOUR	30	$ -	$ -	$ -	$ -

Low Bidder on each item is highlighted and shown in bold above

CEDAR CITY CORPORATION
BID TABULATION
BLANKET CONTRACTS FY 2027 (JULY 2026 - JUNE 2027)

ASPHALT STREET CRACK SEAL PROJECT

ITEM NUMBER	DESCRIPTION	UNIT	QUANTITY	CR CONTRACTING UNIT COST	CR CONTRACTING TOTAL AMOUNT	BONNEVILLE ASPHALT & REPAIR LLC UNIT COST	BONNEVILLE ASPHALT & REPAIR LLC TOTAL AMOUNT	STRAIGHT STRIPE PAINTING INC. UNIT COST	STRAIGHT STRIPE PAINTING INC. TOTAL AMOUNT
1	Mobilization, Permits, Payment and Performance Bond	LS	1	$ 255.00	$ 255.00	$ 1,500.00	$ 1,500.00	$ 150.00	$ 150.00
2	Installation of City Provided Crack Seal Material per Specifications	TON		$ 3,650.00	$ 3,650.00	$ 3,000.00	$ 3,000.00	$ 1,600.00	$ 1,600.00
	TOTAL BID				$ 3,905.00		$ 4,500.00		$ 1,750.00

ITEM NUMBER	DESCRIPTION	PARADIGM UNIT COST	PARADIGM TOTAL AMOUNT	SIGNATURE STRIPING SOLUTIONS UNIT COST	SIGNATURE STRIPING SOLUTIONS TOTAL AMOUNT	SPENCER ASPHALT UNIT COST	SPENCER ASPHALT TOTAL AMOUNT
1	Mobilization, Permits, Payment and Performance Bond	$ -	$ -	$ -	$ -	$ -	$ -
2	Installation of City Provided Crack Seal Material per Specifications	$ 1,135.00	$ 1,135.00	$ 1,099.00	$ 1,099.00	$ 1,134.00	$ 1,134.00
	TOTAL BID		$ 1,135.00		**$1,099.00**		$ 1,134.00

Apparent Low Bidder: SIGNATURE STRIPING SOLUTIONS

CEDAR CITY CORPORATION
BID TABULATION
BLANKET CONTRACTS FY 2027 (JULY 2026 - JUNE 2027)

TREE TRIMMING SERVICE

ITEM NUMBER	DESCRIPTION	UNIT	ROOTS 2 LEAVES, LLC UNIT COST	TOTAL AMOUNT
1	1-10 Trees	HOUR	$ 95.00	$ 95.00
2	11-20 Trees	HOUR	$ 95.00	$ 95.00
3	21-50 Trees	HOUR	$ 95.00	$ 95.00

Only One Bid - Apparent Low Bidder: ROOTS 2 LEAVES, LLC

CEDAR CITY CORPORATION
BID TABULATION
BLANKET CONTRACTS FY 2027 (JULY 2026 - JUNE 2027)

TOWING SERVICE

ITEM NUMBER	DESCRIPTION	UNIT	LADD'S TOWING LLC UNIT COST	LADD'S TOWING LLC TOTAL AMOUNT	KWICK TOWING & RECOVERY UNIT	KWICK TOWING & RECOVERY UNIT COST	KWICK TOWING & RECOVERY TOTAL AMOUNT
1	Cost Per Towed Vehicle	EA	$ 75.00	$ 75.00	EA	$ 55.00	$ 55.00
2	Meet All Requirements			YES			YES

Apparent Low Bidder: KWICK TOWING & RECOVERY

CEDAR CITY CORPORATION
BID TABULATION
BLANKET CONTRACTS FY 2027 (JULY 2026 - JUNE 2027)

WEED ABATEMENT

ITEM NUMBER	DESCRIPTION	UNIT	AGRI-SPRAY LLC UNIT COST	TOTAL AMOUNT
1	Noxious Weed Abatement	Per Hour	$100.00	**YES**

Only One Bid - Apparent Low Bidder: AGRI-SPRAY, LLC

CEDAR CITY COUNCIL
AGENDA ITEM 8

INFORMATION SHEET

TO: Mayor and City Council

FROM: Matt Baker Water superintendent

DATE: 5/18/2026

SUBJECT: Consider the old Cedar canyon water tank as surplus property

DISCUSSION:

Please consider the old Cedar Canyon water tank as surplus property to be placed up for public auction on www.publicsurplus.com. The winning bidder will be responsible for demolition and complete removal of the entire tank.

In 2011, an inspection was completed by Clear Water Robotics. A summary of that inspection is attached. Since that inspection, the tank floor has developed holes and is now leaking.

Summary: Very Poor

This tank is structurally unsound and is in very real danger of falling down under its own weight. The summary would be better written by the city engineers after a careful review of the video. My thoughts are that this tank should be taken off line, demolished and replaced. I did not see anything in this tank worth salvaging.

Exterior Tank Inspection

Tank Foundation: Good

This is a bolted steel tank that sits on a concrete pad. I cannot see any evidence of problems with the foundation of this tank.

Perimeter Fence: Good

The fence is locked and in good condition.

Roof Access Hatch: Good (see Appendix: 1)

The top access hatch is 24"x 30". The cover is locked and in good working condition.

Roof vent: Good

The vent pipe comes off the top of the roof. The screen is on and in good condition.

Access Road: Good

There is a public road that provides access to this facility, and it's in good condition.

Any estimates or repair should be conducted by a licensed or qualified individual or company.

Interior Tank Inspection

Fill Pipe/Outlet: Acceptable (see Appendix: 2)

I believe the fill pipe is also the outlet pipe in this tank. The pipe is showing signs of deterioration. It needs to be inspected regularly and at some time replaced.

Floor: Acceptable (see Appendix: 3 and 4)

The floor has about 3/8 inch of sediment in this tank, however, it's the debris found in this tank that is of much more concern to me. I found approximately five to seven 2x6 boards lying on the floor as well as cathodic rods and cables. There are piles of rust that have flaked off the walls and ceilings. There are also items on the floor that were unidentifiable. The floor tells as much or more about the condition of the structure than any other part of the tank, and this tank is in very poor condition.

Walls: Very Poor (see Appendix: 5, 6 and 7)

The walls are rusting completely away. Large piles of rust are flaking off the walls, and bubbles are everywhere, even layering on top of each other. My recommendation for this tank is that the city engineers take a close look at the video to determine the fate of this tank. Action needs to be taken immediately because my fear is that this tank will collapse sooner than later. It has happened to others before.

Ladder: Poor (see Appendix: 8)

As with the other metal components of this tank, the ladder has deteriorated beyond the point I would consider to be safe for people to use as a ladder for access into this tank. It is a definite hazard.

Ceiling: Very Poor

I could not get a good picture of the ceiling, as there was only about 10 feet of water in the tank and I could not get close enough. However, I believe the 2x6 boards I saw on the floor came from the ceiling trusses. If that is true, then I feel the ceiling is in terrible condition as well.

Overflow: Very Poor (see Appendix: 9)

This pipe is in the same condition as all the other metal parts of this tank, very heavily deteriorated and needs to be addressed.


NO
TRESPASSING

CEDAR CITY COUNCIL

AGENDA ITEMS – 9

DECISION PAPER

TO: Mayor and City Council

FROM: City Attorney

DATE: May 18, 2026

SUBJECT: Consolidated Fee Schedule – Building Fees

DISCUSSION:

The Building fees were left out of the last approved amendment to the Consolidated Fee Schedule. Chief Building Official Lester Ross will be present at the work meeting to address the requested changes herein.

CEDAR CITY RESOLUTION NO. _____

A RESOLUTION OF THE CEDAR CITY COUNCIL AMENDING THE CEDAR CITY FEE SCHEDULE

WHEREAS, Cedar City maintains a fee schedule showing fees the City charges for various services; and

WHEREAS, the Building Department has a need to update its fees in order to reimburse the City for the public services that it makes available to residents of Cedar City and non-residents alike; and

WHEREAS, City staff have recommended changes in the fee schedule as reflected in exhibit #1; and

WHEREAS, the City Council has reviewed the proposed changes to the fee schedule during an open and public meeting and finds that the proposed fee changes are reasonable and necessary.

NOW THEREFORE be it resolved by the City Council of Cedar City, State of Utah, that Cedar City's fee schedule is amended as set forth in exhibit #1.

NOW THEREFORE BE IT FURTHER RESOLVED by the City Council of Cedar City, State of Utah, that this resolution shall become effective immediately upon passage.

NOW THEREFORE BE IT FURTHER RESOLVED by the City Council of Cedar City, State of Utah, that City staff is authorized to make such changes of a non-substantive nature to the City's fee schedule as are reasonably necessary to facilitate the foregoing amendment.

Council Vote:

Phillips -
Cox -
Wilkey -
Schmidt -
Galan -

Dated this _____ day of May, 2026.

_____
STEVE NELSON
MAYOR

[SEAL]
ATTEST:

_____
RENON SAVAGE
RECORDER

Exhibit #1

Cedar City Resolution No. _____

CEDAR CITY CORPORATION
Proposed Fee or Rate Increase
FY 2026-27

The Building Department Fee schedule is antiquated and needs to be updated to reflect the way that the department calculate building permits fees and to become more in line with the state standers. See the attached copy of the proposed fee schedule and a snapshot of the permit fees from 2025 showing the cost difference between the current calculation and the proposed calculations. This would change it, so the plan review fee is a set percent of 30 percent of the building permit fee, if you combine the fees on the current calculations the average percent is 27 percent of the building fee. The proposed change will increase the cost of some permits and decrease the cost of others. Overall, this will make it easier for contractors and owners to calculate the permit fees and make the prosses more transparent as they are applying for a building permit.

BUILDING DEPARTMENT

Building Permit Fees

Building Valuations

New Construction	As set by ICC Building Valuation Data table August 2011
Remodel	$50.00 per Sq foot
Basement Finish	$50.00 per Sq foot
Tenant Improvement	$50.00 per Sq foot
Electrical (service upgrade, new meter base, etc.)	$50.00
Mechanical (Furnace, Gas line, gas meter, etc.)	$50.00
Plumbing (water heater, etc.)	$50.00
Solor with or without batteries	Contractor's Estimate
Retaining walls	Contractor's Estimate
Sign	$25.00 per sign type
Grading/Excavation	Per Engineer Estimate

Building Permit Calculation Table

TOTAL VALUATION	FEE
$1 to $500	$24
$501 to $2,000	$24 for the first $500; plus $3 for each additional $100 or fraction thereof, to and including $2,000.
$2,001 to $40,000	$69 for the first $2,000; plus $11 for each additional $1,000 or fraction thereof, to and including $40,000.
$40,001 to $100,000	$487 for the first $40,000; plus $9 for each additional $1,000 or fraction thereof, to and including $100,000.
$100,001 to $500,000	$1,027 for the first $100,000; plus $7 for each additional $1,000 or fraction thereof, to and including $500,000.
$500,001 to $1,000,000	$3,827 for the first $500,000; plus $5 for each additional $1,000 or fraction thereof, to and including $1,000,000.
$1,000,001 and over	$6,387 for the first $1,000,000; plus $4 for each additional $1,000 or fraction thereof.

Other Building permits Fees	
Plan Review	30% of Building Permit
Utah State Fee	1% of Building Permit
Northwest Water Reimbursement Area	$1,500 Per ERU
Other Building fees	
Inspection (not part of a building permit)	$50.00
Re-inspection	$50.00
Revised Plan review	$50.00 per hour

Buildier	permit #	permit type	Building Fee	Eng. Plan Check Fee	Electrical Fee	Plumbing Fee	Mechanical Fee	Plan Fee total	Percent of Check fees	30% plan Check fee	Change in Fees
All Pro Cons	25-056 (C)	Addition	$ 951.75	$ -	$ -	$ -	$ -	$ -	0%	$ 285.53	$ 285.53
Matthew Ma	25-525	Addition	$ 1,195.35	$ -	$ 112.88	$ 213.65	$ 92.10	$ 418.63	35%	$ 358.61	$ (60.03)
Mountain St	25-214 (C)	Addition	$ 720.75	$ -	$ -	$ -	$ -	$ -	0%	$ 216.23	$ 216.23
ARC Contrac	25-147	Addition	$ 377.25	$ -	$ 57.10	$ -	$ -	$ 57.10	15%	$ 113.18	$ 56.08
Copper Poin	25-118 (C)	Addition	$ 181.25	$ -	$ 73.12	$ -	$ 33.30	$ 106.42	59%	$ 54.38	$ (52.05)
3 MC Constr	25-359 (C)	Addition	$ 293.25	$ -	$ -	$ -	$ -	$ -	0%	$ 87.98	$ 87.98
Shettell Rea	25-270 (C)	ADU	$ 24.75	$ -	$ -	$ -	$ -	$ -	0%	$ 7.43	$ 7.43
MHP Homes	25-571	Commercial	$ 2,001.75	$ 184.00	$ 163.05	$ 86.25	$ 33.30	$ 282.60	14%	$ 600.53	$ 317.93
Carter Enter	25-360 (C)	Commercial	$ 307.25	$ -	$ 32.85	$ 125.45	$ 33.30	$ 191.60	62%	$ 92.18	$ (99.43)
JMI Construc	25-314	Commercial	$ 5,973.75	$ 618.84	$ 926.39	$ -	$ -	$ 926.39	16%	$ 1,792.13	$ 865.74
Grass Creek	25-660	Commercial	$ 9,350.00	$ -	$ 8,089.74	$ 184.25	$ 33.30	$ 8,307.29	89%	$ 2,805.00	$ (5,502.29)
Grass Creek	25-659	Commercial	$ 4,791.75	$ 270.00	$ 617.04	$ 96.05	$ 33.30	$ 746.39	16%	$ 1,437.53	$ 691.14
Velocity Buil	25-473	Commercial	$ 1,704.95	$ 90.48	$ 129.84	$ 105.85	$ 33.30	$ 268.99	16%	$ 511.49	$ 242.50
CG Develop	25-274	Commercial	$ 1,867.35	$ 74.76	$ 303.50	$ -	$ -	$ 303.50	16%	$ 560.21	$ 256.71
CG Develop	25-273	Commercial	$ 1,867.35	$ 74.76	$ 303.50	$ -	$ -	$ 303.50	16%	$ 560.21	$ 256.71
Nova Built L	25-316 (C)	Commercial	$ 3,518.75	$ 103.14	$ 303.50	$ 101.90	$ 33.30	$ 438.70	12%	$ 1,055.63	$ 616.93
Westside Co	25-621	Commercial	$ 9,350.00	$ 224.00	$ 1,700.03	$ 341.05	$ 43.10	$ 2,084.18	22%	$ 2,805.00	$ 720.82
Nova Built L	25-517 (C)	Commercial	$ 4,036.50	$ 135.00	$ 615.48	$ 135.25	$ 33.30	$ 784.03	19%	$ 1,210.95	$ 426.92
Miller Contr	25-545 (C)	Commercial	$ 3,032.15	$ 112.50	$ 275.50	$ 115.65	$ 43.10	$ 434.25	14%	$ 909.65	$ 475.40
Wasatch Co	25-440	Multi-Family	$ 12,674.81	$ -	$ 1,616.92	$ 2,183.45	$ 1,905.01	$ 5,705.38	45%	$ 3,802.44	$ (1,902.94)
Wasatch Co	25-442	Multi-Family	$ 14,096.99	$ -	$ 1,828.55	$ 2,418.65	$ 2,081.50	$ 6,328.70	45%	$ 4,229.10	$ (2,099.60)
Wasatch Co	25-441	Multi-Family	$ 15,386.32	$ -	$ 2,020.40	$ 2,653.85	$ 2,257.90	$ 6,932.15	45%	$ 4,615.90	$ (2,316.25)
Timberhawk	25-331	Multi-Family	$ 6,265.48	$ 199.36	$ 703.12	$ 850.65	$ 493.90	$ 2,047.67	33%	$ 1,879.64	$ (168.03)
RW Services	25-674	Multi-Family	$ 2,959.77	$ 252.00	$ 359.50	$ 331.25	$ 199.90	$ 890.65	30%	$ 887.93	$ (2.72)
Wasatch Co	25-657	Multi-Family	$ 14,096.99	$ -	$ 1,828.55	$ 2,418.65	$ 2,081.50	$ 6,328.70	45%	$ 4,229.10	$ (2,099.60)
Wasatch Co	25-656	Multi-Family	$ 15,386.32	$ -	$ 2,020.40	$ 2,653.85	$ 2,257.90	$ 6,932.15	45%	$ 4,615.90	$ (2,316.25)
Jake Hulet	25-095 (C)	Residential	$ 1,236.58	$ -	$ 105.60	$ 164.65	$ 82.30	$ 352.55	29%	$ 370.97	$ 18.42
Roy Talmage	25-073 (C)	Residential	$ 3,375.52	$ -	$ 382.68	$ 292.05	$ 141.10	$ 815.83	24%	$ 1,012.66	$ 196.83
Jake Hulet c	25-064 (C)	Residential	$ 1,748.58	$ -	$ 169.16	$ 184.25	$ 82.30	$ 435.71	25%	$ 524.57	$ 88.86
D R Horton	25-040 (C)	Residential	$ 1,377.49	$ -	$ 122.79	$ 174.45	$ 92.10	$ 389.34	28%	$ 413.25	$ 23.91
Joe Burgess	25-027 (C)	Residential	$ 1,582.16	$ -	$ 147.54	$ 194.05	$ 92.10	$ 433.69	27%	$ 474.65	$ 40.96
Carter Enter	25-1096	Residential	$ 3,142.17	$ -	$ 360.56	$ 390.05	$ 170.50	$ 921.11	29%	$ 942.65	$ 21.54
2CC Contrac	25-028 (C)	Residential	$ 2,019.15	$ -	$ 292.20	$ 223.45	$ 121.50	$ 637.15	32%	$ 605.75	$ (31.41)
MHP Homes	25-1028	Residential	$ 1,559.07	$ -	$ 143.73	$ 194.05	$ 92.10	$ 429.88	28%	$ 467.72	$ 37.84
MHP Homes	25-1026	Residential	$ 1,554.05	$ -	$ 142.50	$ 194.05	$ 92.10	$ 428.65	28%	$ 466.22	$ 37.57
D R Horton	25-169 (C)	Residential	$ 1,377.49	$ -	$ 122.79	$ 174.45	$ 92.10	$ 389.34	28%	$ 413.25	$ 23.91
D R Horton	25-171 (C)	Residential	$ 1,377.49	$ -	$ 122.79	$ 174.45	$ 92.10	$ 389.34	28%	$ 413.25	$ 23.91
NAIL AND H	25-143 (C)	Residential	$ 1,806.73	$ -	$ 171.90	$ 243.05	$ 111.70	$ 526.65	29%	$ 542.02	$ 15.37
Premier Dev	25-065 (C)	Residential	$ 1,793.54	$ -	$ 176.10	$ 184.25	$ 92.10	$ 452.45	25%	$ 538.06	$ 85.61

Ponderosa C	25-146 (C)	Residential	$ 1,882.12	$ -	$ 178.40	$ 194.05	$ 101.90	$ 474.35	25%	$ 564.64	$ 90.29
All Pro Cons	25-288 (C)	Residential Rem	$ 335.25	$ -	$ 111.03	$ 105.85	$ 33.30	$ 250.18	75%	$ 100.58	$ (149.61)
Self	25-238	Residential Rem	$ 411.95	$ -	$ 52.96	$ 115.65	$ -	$ 168.61	41%	$ 123.59	$ (45.03)
Alex Meisne	25-374 (C)	Residential Rem	$ 502.85	$ -	$ 63.60	$ 145.05	$ 43.10	$ 251.75	50%	$ 150.86	$ (100.90)
JRK Handym	25-296 (C)	Residential Rem	$ 111.25	$ -	$ 28.20	$ 86.25	$ -	$ 114.45	103%	$ 33.38	$ (81.08)
Peak Constr	25-223	Townhome	$ 1,756.65	$ -	$ 172.35	$ 223.45	$ 101.90	$ 497.70	28%	$ 527.00	$ 29.30
Peak Constr	25-224	Townhome	$ 1,756.65	$ -	$ 172.35	$ 223.45	$ 101.90	$ 497.70	28%	$ 527.00	$ 29.30
Desert Sage	25-186 (C)	Townhome	$ 1,231.05	$ -	$ 95.40	$ 164.65	$ 92.10	$ 352.15	29%	$ 369.32	$ 17.17
Desert Sage	25-185 (C)	Townhome	$ 1,231.05	$ -	$ 95.40	$ 164.65	$ 92.10	$ 352.15	29%	$ 369.32	$ 17.17
Mark 1 Deve	25-310 (C)	Townhome	$ 1,463.33	$ -	$ 131.58	$ 194.05	$ 101.90	$ 427.53	29%	$ 439.00	$ 11.47
Mark 1 Deve	25-309 (C)	Townhome	$ 1,466.98	$ -	$ 131.92	$ 194.05	$ 101.90	$ 427.87	29%	$ 440.09	$ 12.22
Alliance Dev	25-249	Townhome	$ 1,211.36	$ -	$ 107.89	$ 184.25	$ 92.10	$ 384.24	32%	$ 363.41	$ (20.83)
Alliance Dev	25-248	Townhome	$ 1,211.36	$ -	$ 107.89	$ 184.25	$ 92.10	$ 384.24	32%	$ 363.41	$ (20.83)
D R Horton	25-408 (C)	Townhome	$ 1,653.18	$ -	$ 170.05	$ 194.05	$ 101.90	$ 466.00	28%	$ 495.95	$ 29.95
D R Horton	25-540 (C)	Townhome	$ 1,653.18	$ -	$ 170.05	$ 194.05	$ 101.90	$ 466.00	28%	$ 495.95	$ 29.95
Tried and Tr	25-324 (C)	Townhome	$ 1,288.47	$ -	$ 108.28	$ 203.85	$ 101.90	$ 414.03	32%	$ 386.54	$ (27.49)
Tried and Tr	25-327 (C)	Townhome	$ 1,546.73	$ -	$ 137.63	$ 203.85	$ 101.90	$ 443.38	29%	$ 464.02	$ 20.64
		Total for 2025	$ 1,448,589.09	$ 9,108.06	$ 166,873.16	$ 160,763.30	$ 86,869.13	$ 414,505.59	27%	$ 434,576.73	$ 20,071.14

CEDAR CITY
CITY COUNCIL AGENDA ITEM 10
STAFF INFORMATION SHEET

To: Mayor and City Council

From: Bill Maxwell

Council Meeting Date: May 20, 2026

Subject: **Consider bids for the Fiddlers Park project.**

Discussion: Bids for the Fiddlers Park project were received May 14th, 2026. The bids that were received for this project include the necessary infrastructure, frontage improvements, and site work that is needed to prepare the park area for the playground equipment and other amenities to be installed. As shown in the table below, the Base Bid includes the site work on the south side of the Fiddlers drainage channel including a new restroom building and a pedestrian bridge over the channel. The Alternate Bid includes site work on the north side of the Fiddlers drainage channel.

Contractors and others were notified of this project via email, advertisement in the Spectrum newspaper, and on the City's website. The bid documents were requested by 37 contractors, 5 suppliers, and 1 plan room.

There were three bids that were opened, and the results are presented below.

	Base Bid	**Alternate Bid**	**Total Bid**
PRT Builders, LLC	$ 1,235,123.22	$ 114,566.40	$ 1,349,689.62
Interstate Rock Products	$ 1,416,852.45	$ 125,429.20	$ 1,542,281.65
Advanced Construction and Design, LLC	$ 1,790,000.55	$ 124,293.00	$ 1,914,293.55

The apparent low bidder for the project is PRT Builders. If the bid is awarded it would be on condition that the Contractor provide the required executed bonding, insurance documents, immigration

status verification, and that the Mayor be authorized to sign the agreement with the Contractor.

The following table provides a summary of the proposed budget for this project:

Project Funding
Fiddlers Park Project

FY2026 Funding

Cap. Imp. Fund – Fiddlers Park (10-83-742)	$420,000
Cap. Imp. Fund – Fiddlers Canyon Park (10-83-742)	$997,422
Rap Tax – Fiddlers Canyon Park/Retention Basin (10-83-790)	$434,686
Rap Tax – Fiddlers Cayon Park Improvements (10-83-790)	$480,723
Parks & Rec Impact Fees – Park Design (Fiddlers & Armbrust) (26-40-310)	$75,000
Parks & Rec Impact Fees – Fiddlers Canyon Park (26-40-737)	$775,221
Total Funding	**$3,183,052**

FY2026 Expenses

Engineering services – Terracon	$(79,157.80)
Construction Contract	$(1,349,689.62)
Sewer construction	$(70,167.21)
Materials Testing (0.5% of construction)	$(6,750.00)
Misc. – channel re-work, grading, soils report	$(37,002.31)
Contingency	$(25,000.00)
Playground Amenities Estimate	$(1,200,000.00)

	Funding	**Expenses**	**Balance**
Totals -	**$3,183,052.00**	**$(2,767,766.94)**	**$415,285.06**

The playground equipment and amenities will be provided and installed after this portion of the project is completed through a separate contract. An estimated amount for that portion of the project has been provided and is reflected in the expenses

breakdown. Additional funding in the amount of $850,000 has been requested in the FY 2027 budget to complete the full project.

Please consider whether to award the bid for the Fiddlers Park Project. Thank you.

CEDAR CITY
CITY COUNCIL AGENDA ITEM 11
STAFF INFORMATION SHEET

To: Mayor and City Council

From: Shane Johnson

Council Meeting Date: May 20, 2026

Subject: **Consider bids for the 600 South and 1100 West Traffic Signal Project.**

Discussion: The traffic study completed recently by Hales Engineering found that a traffic signal is warranted at this intersection of 600 South and 1100 West. The design has been completed for the new traffic signal by Kimley-Horn & Associates. The construction bids for the project have been received and are now being presented for consideration.

Contractors and others were notified of this project via email, advertisement in the Spectrum newspaper, and on the City's website. The bid documents were requested by 7 contractors and 4 plan rooms. Cedar City received 2 bids for the project.

The following table shows a summary of the bids that were received:

Bid Summary – 600 South and 1100 West Traffic Signal Project

Name of Contractor	Office Location	Total Bid Amount
Cache Valley Electric Co.	Salt Lake City, UT	$264,614.78
Interstate Rock Products	Hurricane, UT	$274,823.25

If this bid is awarded it would be on the condition that the Contractor provide the required executed bonding, insurance documents, immigration status verification, and that the Mayor be authorized to sign the agreement with the Contractor.

The following table provides a summary of the proposed budget for this project:

Project Funding
600 South & 1100 West Traffic Signal Project
(Account #10-79-730)

	Funding	Expenses	Balance
Funding in FY26 –			
Traffic Signal at 600S 1100W(10-79-730)	$492,500		
Expenses –			
Engineering services – Kimley-Horn		($42,500)	
Construction contract		($264,615)	
State furnished signal materials		($115,102)	
Rocky Mountain Power service contract (estimate)		($15,000)	
Misc./Contingency/Materials Testing		($20,000)	
Totals –	**$492,500**	**($457,217)**	**$35,283**

Please consider whether to award the bid for the 600 South & 1100 West Traffic Signal project. Thank you for your consideration.

CEDAR CITY
CITY COUNCIL AGENDA ITEM 12
STAFF INFORMATION SHEET

To: Mayor and City Council

From: Jonathan Stathis

Council Meeting Date: May 20, 2026

Subject: **Consider proposals for engineering design of the Cedar Canyon Springs Filtration Treatment Plant Project.**

Discussion: This project involves the design of a new filtration treatment plant facility for the Cedar Canyon Springs. According to a stipulated order issued by the Utah Division of Drinking Water (DDW), Cedar City is required to add additional treatment for the Cedar Canyon Springs in order to continue using the springs in the culinary water system. Moving forward with the design will allow the project to meet DDW milestones for completion of the project. The Consultant's deadline for submission of the project design to DDW is February 12, 2027. The fee includes design, bidding, and construction assistance during all phases of the project.

Consultants were notified of this project via email, newspaper advertisement, and on the City's website. The Request for Proposals (RFP) was requested by 11 consultants and 1 supplier.

Cedar City received two (2) proposals for the Cedar Canyon Springs Filtration Treatment Plant Project. Based on the scoring of the proposals, Hansen, Allen & Luce received the highest score. The proposals were evaluated based on a 100-point scoring system.

If the proposal is awarded it would be on condition that the Consultant provide the required executed insurance documents, immigration status verification, and that the Mayor be authorized to sign the agreement with the Consultant.

The table on the next page shows a ranking of the proposals based on the average evaluation score. The table also lists the proposed fee and where each Consultant has an office location.

Both consultants listed other firms as team members. The following table lists the other firms on those project teams.

Proposal Scoring Summary
Cedar Canyon Springs Filtration Treatment Plant Project

			Hansen, Allen & Luce, Inc. **(South Jordan, UT)** **Teamed with:** **Stantec – filtration/chlorination** **Conder Engineering – structural** **Hegerhorst Power Eng. – electrical** **Bluefield Engineering – HVAC** **AGEC – geotechnical** **Bio-West – wildlife surveys**	**AE2S** **(Lehi, UT)** **Teamed with:** **Watson Engineering – surveying and geotechnical**
	Proposed Fee =		**$548,352.00**	**$649,995.00**
1	Introductory Letter	**5**	4.0	3.88
2	Project Team	**10**	9.0	7.0
3	Consultant's Capability	**15**	13.0	11.0
4	Project Understanding	**10**	8.0	7.75
5	Work Plan	**20**	16.25	16.75
6	Schedule Control	**15**	11.50	13.25
7	Project Cost & Fees	**20**	20.0	16.29
8	Required City Services	**5**	4.25	4.25
	Point Totals	**100**	**86.00**	**80.17**

The table on the following page provides information regarding the funding for the project.

Project Funding
Cedar Canyon Filtration Facility
Account #51-40-720

Funding -	Funding	Expenses	Balance
Cedar Canyon Filtration Facility (Account #51-40-720)	$4,195,345		
Engineering Expenses -			
Rate Study – Consultant Fees		($548,352)	
Totals -	**$4,195,345**	**($548,352)**	**$3,646,993**

Please consider whether to award this project to one of the consultants for the Cedar Canyon Springs Filtration Treatment Plant project. Thank you for your consideration.

CEDAR CITY COUNCIL

AGENDA ITEM – 13

TO: Mayor and City Council
FROM: Tyler Galetka, Airport Manager
DATE: May 20, 2026
SUBJECT: AIP 055 – Award Engineering Contract: Reconstruct/Rehabilitate Taxiway A and Rehabilitate East General Aviation Apron – Phase I Design

DISCUSSION:

Award Engineering Contract for AIP 055:

The Cedar City Regional Airport is moving forward with AIP Project No. 3-49-0005-055-2026, which will fund the Phase I Design for the Reconstruct/Rehabilitate of Parallel Taxiway A and the Rehabilitation of the East General Aviation (GA) Apron. This project addresses significant pavement deterioration on both the parallel taxiway and the western portion of the east apron, which have reached or exceeded their useful service lives.

WOOLPERT (formally JVIATION), holds the master engineering contract for the airport and has submitted Task Order #9 under the Master Professional Services Agreement dated July 20, 2022. The scope of work includes the following project elements:

- Reconstruct/Rehabilitate Parallel Taxiway A Pavement – The north section (approximately 50' x 3,270') will undergo major rehabilitation including removal of the existing asphalt surface, reconditioning of the aggregate base course, and placement of a new asphalt surface course. The south section (approximately 50' x 5,170') exhibits advanced structural deterioration and will require full pavement reconstruction down to subgrade.
- Reconstruct Parallel Taxiway A Lighting – The existing stake-mounted taxiway edge lighting system, installed over 20 years ago, has reached the end of its useful service life. New medium-intensity LED taxiway edge lights will be installed consistent with existing airfield lighting systems, improving reliability and maintaining Part 139 compliance.
- Rehabilitate East GA Apron – Approximately 14,220 square yards (320' x 400') of the western portion of the east GA apron will be removed and rehabilitated. Portions of this apron date to original construction in 1943 and 1977, and pavement condition evaluations have rated the area in poor condition (PCI = 54).

The engineering scope is divided into Part A – Basic Services (Preliminary Design Phase and Design Phase) and Part B – Special Services (Design Survey Phase and Geotechnical Investigation via subconsultant). The construction budget for this project is estimated at approximately $10,600,000.00.

WOOLPERT's engineering fees for Task Order #9 are as follows:

Description	Fee
Part A – Preliminary Design Phase (Lump Sum)	$112,920.00
Part A – Design Phase (Lump Sum)	$576,298.00
Part B – Design Survey Phase (Lump Sum)	$35,193.00
Subconsultant – Geotechnical Investigation (Landmark Testing & Engineering)	$60,000.00
TOTAL ENGINEERING FEES	**$784,411.00**

These costs have been independently reviewed and are aligned with industry standards for AIP-funded airport engineering projects of this scope. The project will be funded through federal Airport Improvement Program (AIP) funds, with a 5% local match provided by the airport.

Attached is the AIP-055 Task Order #9 contract from WOOLPERT (Jviation, A Woolpert Company, LLC), including the full Scope of Work and fee breakdown. Airport staff is seeking Council approval to execute this engineering agreement and proceed with Phase I Design.

Task Order to Master Professional Services Agreement between Jviation, A Woolpert Company, LLC and Cedar City Regional Airport

Task Order # 9

Section 1. General

THIS TASK ORDER, made and entered into this _____ day of _____, 2026, by and between Jviation, A Woolpert Company, LLC, whose address is 35 South 400 West, Suite 200, St. George, UT 84770, (hereinafter referred to as "Engineer") and Cedar City Regional Airport ("Sponsor"), provides for Services by Engineer under the Master Professional Services Agreement dated July 20, 2022, such Services described under Section 2 of this Task Order.

- Engineer Project Number: 10023506.03
- Task Order Project Title: CDC AIP-055 TW A Recon-Rehab East Apron Rehab-Design

Sponsor's Representative

- Name: Tyler Galetka
- Address: 2560 West Aviation Way, Cedar City, UT 84721
- Phone Number: 435-867-9408
- Email address: gtyler@cedarcityut.gov

Engineer's Representative

- Name: Kirt McDaniel
- Address: 35 South 400 West, Suite 200, St. George, UT 84770
- Phone Number: 435-574-5308
- Email address: Kirt.McDaniel@Woolpert.com

Section 2. Description of Services

The Services to be provided by Engineer are identified in Exhibit A: Scope of Services to this Task Order, which is incorporated by this reference.

Section 3. Compensation to Be Paid to Engineer

Compensation to be paid to Engineer for providing the requested Services is identified in accordance with Exhibit B: Compensation to this Task Order, which is incorporated by this reference.

IN WITNESS WHEREOF, this Task Order, which is subject to the terms and conditions of Sections 1 through 3, Attachment(s), and the aforementioned Master Professional Services Agreement, is accepted as of the date first written above.

Cedar City Regional Airport:

Signed: _____

Name: _____

Title: _____

Jviation, A Woolpert Company, LLC:

Signed: _____

Name: Jason Virzi

Title: Vice President

Exhibit A: Scope of Services

SCOPE OF WORK
FOR
Cedar City Regional Airport
Cedar City, Utah
AIP Project No. 3-49-0005-055-2026
Reconstruct/Rehabilitate TW A and Rehabilitate East General Aviation Apron – Phase I Design

This is an Appendix attached to, made a part of and incorporated by reference with the Professional Services Agreement dated July 20, 2022, between Cedar City and Jviation, a Woolpert Company, for providing professional services. For the remainder of this scope the Cedar City Regional Airport is indicated as "Sponsor" and Woolpert, Inc., is indicated as "Engineer." The construction budget for this project is approximately $10,600,000.00. This construction budget does not include administrative, legal, or professional fees.

This project shall consist of preparing Construction Plans, Contract Documents, Technical Specifications, and Engineer's Design Report, along with Design Survey for the Reconstruct/Rehabilitate Taxiway (TW) A and Rehabilitate East General Aviation (GA) Apron – Phase I Design Project. This scope of work is for the consulting services provided by the Engineer for the Sponsor. See Exhibit No. 1 below for the project location.

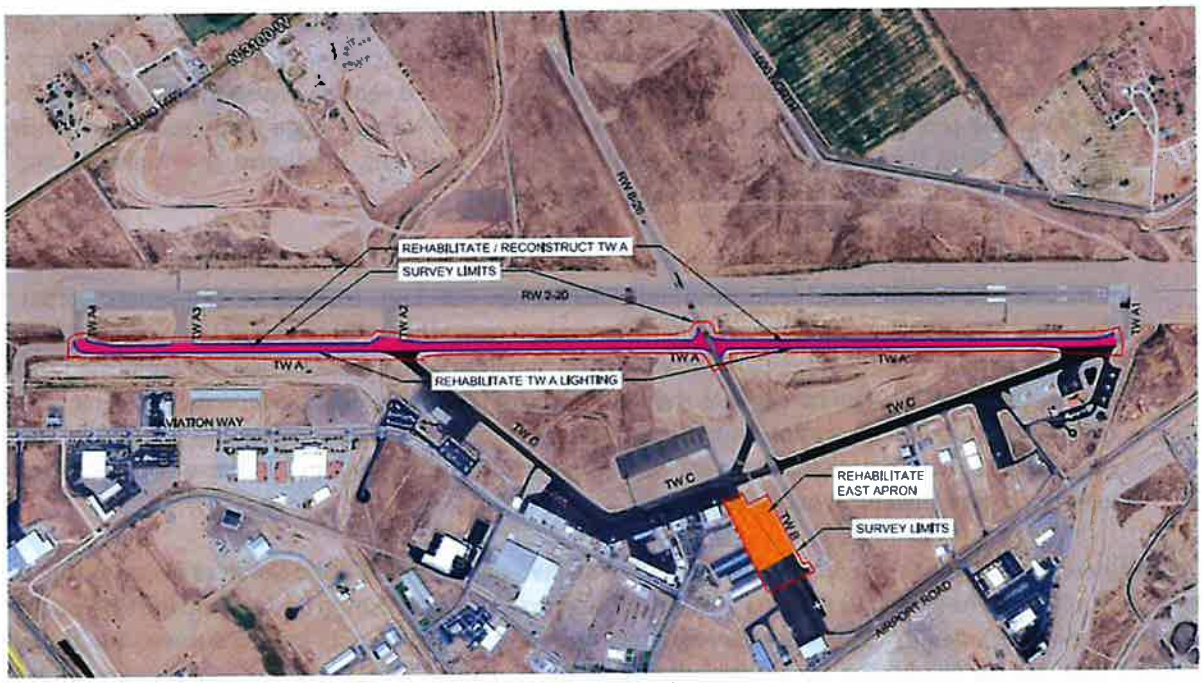

EXHIBIT NO. 1

DESCRIPTION

This project shall consist of the following:

- **Reconstruct/Rehabilitate Parallel Taxiway A Pavement.** Pavement evaluations and observed surface distress indicate varying structural conditions along the length of parallel TW A, warranting a phased rehabilitation and reconstruction approach to restore pavement performance. Preliminary analysis indicates the north section (Runway 8/26 to TW A1 – 50' x

3270' +/-) will undergo major rehabilitation, consisting of removal of the existing asphalt surface, reconditioning of the aggregate base course, and placement of a new asphalt surface course. The south section (Runway 8/26 to TW A4 – 50' x 5170' +/-) exhibits advanced structural deterioration and will require full pavement section reconstruction, including removal of the existing pavement section to subgrade, construction of new granular subbase and base courses, and placement of a new asphalt surface course.

This will restore parallel TW A pavement to a condition capable of supporting existing and forecast aircraft operations, extend pavement service life, and reduce the likelihood of pavement-related operational restrictions or closures. The project represents a cost-effective use of AIP funds by addressing pavement deficiencies at the appropriate point in the pavement life cycle, preserving a critical airfield asset and ensuring the continued safe, efficient, and reliable operation of the airport.

- **Reconstruct parallel TW A Lighting.** This portions of the project will replace the existing parallel TW A edge lighting system and regulator to maintain safe airfield operations and compliance with FAA requirements. The current stake-mounted lighting system with direct-buried power cable was installed over 20 years ago and has reached the end of its useful service life, resulting in increasing maintenance demands and costs.

  Replacement of the taxiway edge lighting in conjunction with the parallel TW A pavement reconstruction and rehabilitation projects, represents a cost-effective use of AIP funds and minimizes future construction impacts. Taxiway edge lighting provides essential visual guidance for aircraft during nighttime and low-visibility operations and is required for Part 139 certificated airports. The project will install new medium-intensity LED taxiway edge lights consistent with existing airfield lighting systems, improving reliability, reducing long-term maintenance and energy costs, and preserving a critical airfield safety asset.

- **Rehabilitate East GA Apron.** The western portion of the existing east GA apron pavement will be removed and rehabilitated (approximately 320 feet by 400 feet, totaling 14,220 square yards). The current UDOT pavement management evaluation rated the western half of the east GA apron in poor condition (PCI = 54); a September 2020 U.S. military pavement evaluation confirmed this assessment. The pavement exhibits medium-severity block cracking, surface depressions, and overall structural deterioration consistent with a pavement that has exceeded its useful life. The original construction date for the most western part of the apron was in 1943, and the rest of the western half of the apron occurred in 1977.

The engineering fees for this project will be broken into two parts. **Part A-Basic Services** includes the 1) Preliminary Design Phase, and 2) Design Phase, and Reimbursable Costs During Design, and **Part B-Special Services,** which includes the 3) Design Survey Phase and Reimbursable Costs During Survey. Additional services that will be completed by subconsultants to the Engineer will be the proposed geotechnical investigation will also be included under **Part B-Special Services.** Parts A and B and the three phases are described in more detail below.

PART A - BASIC SERVICES consists of the Preliminary Design Phase and Design Phase, all invoiced on a lump sum basis.

1.0 Preliminary Design Phase

1.01 Coordinate and Attend Meetings with the Sponsor and FAA. Meetings with the Sponsor and the FAA will take place to determine critical project dates, establish the proposed design schedule and AIP development schedule, review environmental component(s), determine the feasibility of the proposed project and to establish the need for topographical surveying, pavement investigation and/or geotechnical testing. Various meetings during the design phase will also be conducted to review the progress of the design, discuss construction details and proposed time frame of construction and identify any special requirements for the project.

1.02 Prepare Project Scope of Work and Contract. This task includes establishing the scope of work through meetings outlined above. Fees will be negotiated with the Sponsor and may be subject to an independent fee estimate conducted by a third party hired by the Sponsor. This task also includes drafting the contract for the work to be completed by the Engineer for the Sponsor once negotiations are complete.

1.03 Prepare Preliminary Cost Estimating. This task includes creating a preliminary construction rough order of magnitude (ROM) cost estimate, a preliminary working days estimate, a preliminary overall project schedule, and a preliminary overall project budget. The preliminary construction ROM cost estimate will be based upon the most current information available at the time of preparation. Work to refine these estimates is included under Task 2.15.

1.04 Provide Project Coordination. The Engineer shall provide project management and coordination services to ensure the completion of the design. These duties include:

- Time the Engineer spends planning, organizing, securing and scheduling resources, and providing instruction to staff to meet project objectives as defined in the approved scope of work.
- The Engineer will analyze the budget semi-monthly to ensure budget and staffing needs are on track to meet design schedules within budget.
- Additional items to be accomplished include compiling and sending additional information requested from the office to related parties, maintaining project files as necessary and other items necessary in day-to-day project coordination.
- The Engineer will prepare and submit monthly invoicing.

The Engineer will complete the following tasks:

- Provide the Sponsor with a monthly Project Status Report (PSR), in writing, reporting on Engineer's progress and any problems that may arise while performing the work. The PSR must include an update of the project schedule, as described in this section, when schedule changes are expected.
- Submit for acceptance and maintain, a design schedule detailing the scheduled performance of the work.
- Create and maintain a Quality Control Checklist (QCC) for the project. The QCC shall include personnel, project milestone checking and peer review procedures at each phase of the project.

1.05 Review Existing Documents. The Engineer will gather and review existing available documentation that may be relevant to the project, including, but not limited to, record drawings (as-builts), design

reports, final reports, utility reports/maps and previous surveys. The Engineer may use relevant information from this review to coordinate the design and topographical survey for the project

1.06 Coordinate Topographical Survey. This task includes preparing the requirements, establishing the limits of the survey area and scheduling time for the survey to be completed. Survey will be performed in-house under Task 3.01. The Project Manager is expected to visit the project site to coordinate the survey activities with the Sponsor and the survey team.

1.07 Coordinate Geotechnical Investigation. This task includes preparing the requirements for soils testing, establishing the limits of work, and scheduling a time for testing to be completed. The requirements of the geotechnical investigation shall be established in accordance with FAA AC 150/5320-6 (current edition), *Airport Pavement Design and Evaluation.* Negotiating with the geotechnical engineering firm for a cost to perform the work is also included in this task.

1.08 Prepare Federal Grant Application. This task consists of preparing the federal grant application. The application will be submitted during the initial portion of the project. Preparation of the application includes the following:

- Prepare Federal 424 form.
- Prepare Federal Form 5100 – II thru IV that includes project funding summary and program narrative discussing the purpose and need of the work and the method of accomplishment.
- Project sketch (8.5" x 11").
- Include preliminary cost estimate.
- Include the Sponsor's certifications.
- Include the existing Exhibit "A" Property Map

The Engineer shall submit the grant application to the Sponsor for approval and signatures. After obtaining the necessary signatures, the Sponsor or Engineer shall forward a copy of the signed application to the FAA for further processing.

1.09 Prepare Environmental Documentation. The FAA has determined that a Categorical Exclusion (CATEX) applies to the project according to FAA order 1050.1G, and the project can be environmentally approved through the FAA's internal memorandum. The Engineer shall provide the FAA with adequate documentation needed for the internal memo process. An overall environmental exhibit, if applicable, will be created as part of this scope of work, approved by the FAA, and referenced throughout the project.

1.10 Prepare Quarterly Performance Reports – Design. Federal Regulation 49 CFR Part 18 establishes uniform administrative requirements for grants to State and Local Governments. Sub-part 18.40 addresses monitoring and reporting requirements for the Sponsor. The Engineer will assist the Sponsor in managing grant activities to ensure compliance with applicable Federal requirements. The Engineer will submit a quarterly performance report while the grant is active. It is estimated there will be two quarterly performance reports completed during the design phase of this project.

1.11 Manage BlackCat Files. This task includes managing BlackCat Files for the Sponsor. The Engineer will ensure all documentation necessary for the project, including scope of work, record of negotiations, grant applications, etc. are uploaded into BlackCat throughout the duration of the Project.

TASK 1 DELIVERABLES	TO FAA	TO SPONSOR
1.01 Meeting Agendas, AIP Development Schedule and Meeting Minutes from Pre-Design Meeting	✓	✓
1.02 Scope of Work and Draft Contract for the Sponsor	✓	✓
1.03 Preliminary Cost Estimate	✓	✓
1.04 Design Schedule, PSR, and Monthly Invoicing	✓	✓
1.08 Federal Grant Application	✓	✓
1.09 Environmental Documentation	✓	✓
1.10 Quarterly Performance Reports	✓	✓

TASK 1 MEETINGS/SITE VISITS						
Personnel	**Meeting Prep. (Hours)**	**Travel Time (Hours)**	**Meeting/ On-Site Time (Hours)**	**Auto Rental/ Vehicle (Days)**	**Hotel/ Lodging (Days)**	**Per Diem (Days)**
Task 1.01: Pre-Design Meeting (Virtual/Teams Meeting)						
Practice Leader	N/A	N/A	1	N/A	N/A	N/A
Senior Consultant	4	N/A	1	N/A	N/A	N/A
Project Manager IV	2	N/A	1	N/A	N/A	N/A
Project Manager II	N/A	N/A	1	N/A	N/A	N/A
Task 1 Total Reimbursable Expenses						

2.0 Design Phase

2.01 Conduct Design Site Visits. This task includes site visits to inventory and inspect the existing site conditions and the work to be completed as part of the project.

2.02 Analyze Topographic Survey Data. This task includes analyzing the topographical survey data and preparing the data for use with computer modeling. This will include the following tasks:

- Generate three-dimensional contour model from TIN surface model.
- Prepare and process data for spot elevations, grading and/or paving cross sections.

2.03 Analyze Geotechnical Investigation Data. This task includes analyzing the geotechnical investigation. This will include the following tasks:

- Review Geotechnical Engineer recommendations.
- Determine appropriate data for the pavement design form(s).
- Input data for computer modeling with topographical survey data.
- Prepare soil information for incorporation on the construction plans.

2.04 Prepare Pavement Design. After receiving the geotechnical investigation data, the Engineer will analyze the data and prepare a proposed pavement section using current FAA design software (FAARFIELD). In addition to determining the proposed pavement section for the current and anticipated traffic, a pavement classification rating (PCR) analysis will be performed in accordance with FAA Advisory Circular (AC) 150/5335-5 (Current Edition), *Standardized Method of Reporting Airport Pavement Strength – PCR*, to determine the taxiway and east apron PCR classification based on the expected fleet mix. The Engineer will submit the FAARFIELD computer printouts with a narrative to the FAA. The following tasks will be completed:

- Determine appropriate data for pavement design.
- Input data for computer modeling with topographical survey data.
- Prepare an exhibit showing the existing pavement and base course thickness.
- Determine areas of existing pavement to be removed and replaced.
- Prepare pavement and soils information for incorporation on the construction drawings.
- Verify elevation of water table.
- Compile the current airport fleet mix.
- Input data into FAARFIELD.
- Run pavement design scenarios.
- Analyze output from FAARFIELD.
- Select preferred pavement section.
- Compare pavement section to FAA Advisory Circular (AC) 150/5320-6 (Current Edition), *Airport Pavement Design and Evaluation.*
- Verify frost design method.
- Verify overexcavation requirements (if needed).
- Verify optimum moisture content for subgrade preparation.

2.05 Prepare Existing Utility Inventory. This task includes reviewing record drawings and consulting with the Sponsor and local utility companies to identify all utilities within the project site. The Construction Plans will include, to the maximum extent possible, the surveyed locations of observable utility features and the locations identified by utility locates.

2.06 Prepare Preliminary Contract Documents. This task includes preparing the Preliminary Contract Documents, including Contract Proposal, Bid Bond, Contractor Information Sheet, Subcontractor/Material Supplier List, Buy America Certification, Buy America Waiver Request, Buy America Conformance Listing, Bid Proposal, Contract, Payment Bond, Performance Bond, Notice of Award, Notice to Proceed, Notice of Contractor's Settlement, General Provisions, FAA AC 150/5370-2 (Current Edition), *Operational Safety on Airports During Construction,* and Wage Rates. The wage rates will be updated at the time of advertisement to reflect the most current wage rates available. Preparation will include establishing the location for the bid opening, dates for advertisement and description of the work schedule. Also included in the Preliminary Contract Documents, and covered under separate tasks below, are the Construction Safety and Phasing Plan, Technical Specifications, and Special Provisions. Preliminary Contract Documents will be prepared as early as possible during the design phase and submitted to the Sponsor for review.

2.07 Prepare Construction Safety and Phasing Plan (CSPP). This task includes meeting with the Sponsor to discuss the current operations of the airport to assist in determining how the proposed construction phasing of the project will affect these operations. From these meetings, a complete Construction Safety and Phasing Plan (CSPP) will be developed to ensure safety compliance when coordinating construction activities and airport operations. The CSPP will be developed in accordance with the requirements of FAA AC 150/5370-2 (Current Edition), *Operational Safety on Airports During Construction.* A construction phasing plan that meets the requirements of the AC and operational needs of the airport will be developed and included in the Contract Documents. This plan will also identify any nighttime work, continuous working times, or other unusual conditions that could affect the Contractor's normal progress on the project. The draft CSPP will be submitted at 30% complete and at 95% complete for ADO review. Upon preliminary approval from the ADO, the CSPP will be submitted to FAA for OE/AAA coordination.

2.08 Prepare Construction Plans. This task includes preparing the following list of construction plans for the project. Additional plans may be added during the design phase as needed:

Plan Name/Description	Number of Sheets
Cover Sheet	1
Index of Drawings, Summary of Approximate Quantities, and General Notes	4
Master Legend & Abbreviations	1
Survey Control Plan	1
Geotechnical Investigation Plan	9
Overall Phasing Plan	1
Construction Safety Notes & Details	1
Construction Phasing Plan	6
Environmental Exhibit	1
Demolition Plan	6
Geometric Layout Plan	8
Taxiway Plan and Profile	7
Apron Grading Plan	2
Typical Sections	3
Pavement Marking Plan	8
Pavement Marking Details	2
Electrical Notes and Legend	1
Electrical Demolition Plan	7
Electrical Layout Plan	8
Electrical Details	5
Total Sheet Count	**82**

2.09 Prepare Technical Specifications. This task includes assembling the technical specifications necessary for the project. Standard FAA specifications will be utilized where possible, with the guidance from FAA AC 150/5370-10 (Current Edition), *Standard Specifications for Construction of Airports*. Additional specifications will be prepared to address work items for materials that are not covered by the standard FAA specifications. The standard specifications to be utilized shall include, but are not limited to, the following:

- Item C-100 Contractor Quality Control Program (CQCP)
- Item C-102 Temporary Air and Water Pollution, Soil Erosion and Siltation Control
- Item C-105 Mobilization
- Item C-110 Method of Estimating Percentage of Material Within Specification Limits (PWL)
- Item P-101 Preparation/Removal of Existing Pavements
- Item P-151 Clearing and Grubbing
- Item P-152 Excavation, Subgrade and Embankment
- Item P-153 Controlled Low-Strength Material (CLSM)
- Item P-154 Subbase Course
- Item P-209 Crushed Aggregate Base Course
- Item P-401 Asphalt Mix Pavement
- Item P-403 Asphalt Mix Pavement Base Course
- Item P-603 Emulsified Asphalt Tack Coat
- Item P-608 Emulsified Asphalt Seal Coat
- Item P-610 Concrete for Miscellaneous Structures
- Item P-620 Runway and Taxiway Marking
- Item D-701 Pipe for Storm Drains and Culverts
- Item D-751 Manholes, Catch Basins, Inlets and Inspection Holes
- Item L-108 Underground Power Cable for Airports
- Item L-109 Airport Transformer Vault and Vault Equipment
- Item L-110 Airport Underground Electrical Duct Banks and Conduits

- Item L-115 Electrical Manholes and Junction Structures
- Item L-119 Airport Obstruction Lights
- Item L-125 Installation of Airport Lighting Systems

2.10 Prepare Special Provisions. This task includes preparing the Special Provisions to address, or expound on, site conditions that require additional clarification. These include, but are not limited to: Haul Roads, Airport Security, Radio Communications, Work Schedule, Contractor's Quality Control Program, Sequencing of the Work, Closure of Air Operations Areas, Accident Prevention, Underground Cables/Utilities, Insurance, Indemnification, Sales and Use Taxes, Permits and Compliance with Laws, Executed Contracts, Subletting or Assigning of Contracts, Liquidated Damages, Acceptance Testing, Grade Control and Surface Tolerance, Construction Management Plan, and Instruction Manuals

2.11 Prepare Drainage Analysis and Storm Drainage Design. This task includes verifying the existing storm drainage and/or subsurface drainage systems. Surface drainage will be evaluated and designed to ensure accordance with standard engineering practices, local requirements and FAA AC 150/5320-5 (Current Edition), *Airport Drainage Design.*

2.12 Compile/Submit Permits. This task includes identifying potential federal, state and local permits needed for the project. Permits are anticipated to be required for, but are not limited to, stormwater protection and prevention permit (SWPPP). When applicable, the Engineer will assist the Sponsor to compile information and submit permits that are required to be obtained by the Sponsor.

2.13 Compile/Submit FAA Form 7460. This task includes preparing and submitting the required FAA Form 7460-1, "Notice of Proposed Construction or Alteration," via the FAA's online Obstruction Evaluation/Airport Airspace Analysis (OE/AAA) system on the Sponsor's behalf. The Engineer will reference FAA Advisory Circular (AC) 150/5300-20 (Current Edition), *Submission of On-Airport Proposals for Aeronautical* Study, and coordinate with the FAA Project Manager and/or Airspace Specialist to determine the locations of required airspace case studies to be submitted. Generally, such cases are required for any restrictive/critical points where construction operations or proposed alterations may affect navigable airspace. Typically, these locations include (but are not limited to): limits of construction, construction phasing limits, haul routes for construction traffic, asphalt and/or concrete batch plants, and key points of any permanent, above-ground alterations. The Engineer will prepare an exhibit depicting the locations and other information pertinent to the cases' impact on the airspace to include with the submission. The Engineer will submit FAA Form 7460-1 and the associated documentation to the FAA via the OE/AAA system for approval a minimum of 45 days prior to the start of construction.

2.14 Calculate Estimated Quantities. This task includes calculating all necessary quantities for the various work items. Quantities must be consistent with the specifications and acceptable quantity calculation practices.

2.15 Prepare Estimate of Probable Construction Cost. Using the final quantities calculated following the completion of the construction plans and specifications, the Engineer will prepare the construction cost estimate. The estimate will be based on information obtained from previous projects, contractors, material suppliers and other available databases.

2.16 Prepare Engineer's Design Report. This task includes preparation of the Engineer's Design Report in accordance with current FAA Northwest Mountain Region Engineer's Design Report guidelines. The Engineer's Design Report will include a detailed summary of the project, photographs and descriptions of existing site conditions, pavement life cycle cost analysis, recycling and material availability analysis, estimate of project costs, and a schedule for the completion of the design, bidding, and construction. The

Engineer's Design Report will also contain any alternative design concepts that were investigated and evaluated.

2.17 Review Plans at 30%, 60%, and 90% Complete. During various stages of completion of the design, the Engineer will submit a set of Construction Plans, Specifications, and Contract Documents to the Sponsor for their review. Meetings will be scheduled for periodic reviews, including a 90% plans-in-hand review. The project will be reviewed with the FAA to obtain their concurrence with the design.

2.18 Provide In-House Quality Control. The Engineer has an established quality control program that will provide both experienced and thorough reviews of all project submittals and will also provide engineering guidance to the design team throughout design development from an experienced, senior-level Professional Engineer.

Prior to each review set of Construction Plans, Specifications, Contract Documents, and Engineer's Design Report being submitted to the Sponsor and FAA, a thorough, in-house quality control review of the documents will be conducted. This process will include an independent review of the Construction Plans, Specifications, Contract Documents, and Engineer's Design Report being submitted by a licensed Professional Engineer other than the Engineer who performed the design of the project. Comments will be offered by the Engineer that performed the review, and revisions to the Construction Plans, Specifications, Contract Documents, and Engineer's Design Report will be made accordingly.

In addition to the 30%, 60%, and 90% reviews, the Engineer's in-house quality control program also provides engineering guidance to the design team throughout the project design in an attempt to steer the project in a manner that provides the best engineering judgment.

At the 90% design review, the independent review will re-evaluate the CATEX boundary.

2.19 Prepare and Submit Construction Plans, Specifications, Contract Documents, and Engineer's Design Report. A final set of Construction Plans (11" x 17"), Specifications, Contract Documents, and the Engineer's Design Report will be prepared and submitted to the Sponsor and the FAA. These documents will incorporate all revisions, modifications, and corrections identified during the final review. Paper and electronic copies will be provided.

2.20 Prepare Airfield Signing and Marking Plan. This task includes providing or updating the overall airfield signing and marking plan.

2.21 Prepare Requests for Reimbursement. This task includes preparing the FAA Standard Form 271 for Sponsor reimbursement of eligible expenses incurred on a monthly basis. The Engineer will submit the completed form along with appropriate supporting documentation to the Sponsor for review and approval. Upon approval, the Engineer or the Sponsor will submit the completed forms and supporting documentation to the FAA for reimbursement. It is estimated there will be three RFRs for expenses incurred during the design phase of this project.

2.22 Prepare and Submit Design Closeout Report. This task includes preparation of the design closeout report in accordance with current FAA Northwest Mountain Region Design Closeout Report guidelines. Paper and electronic copies will be provided.

TASK 2 DELIVERABLES	TO FAA	TO SPONSOR
2.04 Proposed Pavement Design	✓	✓
2.06 Preliminary Contract Documents for Sponsor's Review		✓

2.07 CSPP at 60% and 95% Complete	✓	✓
2.13 FAA Form 7460	✓	
2.17 30%, 60%, and 90 % Construction Plans, Specifications, Contract Documents, and Engineer's Design Report	✓	✓
2.19 Final Construction Plans, Specifications and Contract Documents, and Engineer's Design Report	✓	✓
2.20 Airfield Signing and Marking Plan	✓	✓
2.21 Requests for Reimbursement	✓	✓
2.22 Design Closeout Report	✓	✓

TASK 2 MEETINGS/SITE VISITS						
Personnel	**Meeting Prep. (Hours)**	**Travel Time (Hours)**	**Meeting/ On-Site Time (Hours)**	**Auto Rental/ Vehicle (Days)**	**Hotel/ Lodging (Days)**	**Per Diem (Days)**
Task 2.01: Design Site Visits, Three Visits (Cedar City, UT)						
Project Manager IV	4	18	18	3	N/A	3
Project Manager II	2	4	12	2	N/A	2
Project Engineer	2	6	6	N/A	N/A	1
Task 2.17: Review Plans at 30% and 60% Complete (Virtual/Teams Meetings)						
Project Manager IV	N/A	N/A	4	N/A	N/A	N/A
Project Manager II	N/A	N/A	4	N/A	N/A	N/A
Task 2.17: Plan Review at 90% Complete (Virtual/Teams Meeting)						
Project Manager IV	N/A	N/A	2	N/A	N/A	N/A
Project Manager II	N/A	N/A	2	N/A	N/A	N/A
Task 2 Total Reimbursable Expenses				**5**	**0**	**6**

EX Reimbursable Costs During Design. This section includes reimbursable items such as auto rental, lodging, per diem, and other miscellaneous expenses incurred in order to complete **Part A – Basic Services**.

PART B - SPECIAL SERVICES consists of the Design Survey Phase which is invoiced on a lump sum basis.

3.0 Design Survey Phase

3.01 Perform Topographical Survey. This task includes providing design survey services within the topographic survey limits shown in Exhibit No. 1 to support the design team for this project. Work items associated with this task include the following:

- Topographical survey of approximately 40 acres for the taxiway and seven (7) acres for the apron.
- Preparation of a survey plan that will determine the appropriate survey methods and equipment to be utilized.
- It is assumed that the Primary Airport Control Station (PACS) and Secondary Airport Control Stations (SACS) located on the airport are in good condition and can be verified; however, if it is found that the PACS and SACS do not exist, or are compromised, establishment of temporary airport control must be completed and tied to the national spatial reference system via static GPS observations. Following airport control verification/establishment, temporary project control, based upon the airport control PACS and SACS or temporary airport control, will be placed near the project area at intervals not to exceed 500 feet to control the project.

- Ground topography of non-pavement areas will be surveyed at 50-foot stations with associated cross sections having no greater than 50-foot spacing and will include additional shots as necessary to accurately depict breaklines. These ground topography areas will be surveyed with vertical accuracies not to exceed +/- 0.10 feet.
- Hard surface pavement for the taxiway, connector taxiways, and apron will be surveyed at 50-foot stations as well as all vertical and horizontal points of tangent/curve with associated cross sections having no greater than 25-foot spacing. All hard surface pavement will be surveyed with vertical accuracies not to exceed +/- 0.02 feet.
- Coordination with design staff to determine pavement tie-in locations. These locations will be surveyed with vertical accuracies of at least +/- 0.02 feet.
- Location of structures, paving, and above ground improvements including building footprint, finished floor elevations at the openings plus five feet interior of the opening and concrete aprons associated with door openings will be surveyed at intervals of no greater than 25 feet.
- Additional airfield elements that will be located and surveyed include aircraft tie-downs, guidance signs, airfield runway, taxiway, and/or apron lighting and paint markings, NAVAIDS within the project area (if any), fences, gates and other airport features within the project area.
- Coordinate location and field marking of all existing utilities in the project limits with one-call services and airport operations staff. Review of existing as-built and other construction records as necessary. All utility locates will be surveyed as marked by utility locators in the field. Points of utilities to be surveyed include, but are not limited to, paint marks, hydrants, valves, hand holes, manholes, inlets, cleanouts, culverts, pipes, pedestals, meters, transformers, utility poles and other reasonably visible existing utility infrastructure components.
- During design, there may be the need to verify existing survey information or extend the limits of the existing survey.
- Reduce all field notes and pictures into a topographic survey report to be used by the Engineer.
- Prepare an AutoCAD file containing planimetric mapping features collected during the field survey. Import linework and points of surveyed features and prepare triangulated irregular network (TIN surface model) of existing ground.
- Generate three-dimensional contours from TIN surface model.

The Topographical Survey shall be completed by, or under the direct supervision of, a state-licensed Professional Land Surveyor.

TASK 3 DELIVERABLES	TO FAA	TO SPONSOR
3.01 Topographical Survey		✓

TASK 3 ON-SITE PERIODS					
Personnel	**Travel Time (Hours)**	**On-Site Time (Hours)**	**Auto Rental/ Vehicle (Days)**	**Hotel/ Lodging (Days)**	**Per Diem (Days)**
Task 3.01: Coordinate and Perform Topographical Survey (Cedar City, UT)					
Surveyor	18	60	8	7	8
Task 3 Total Reimbursable Expenses			**8**	**7**	**8**

EX Reimbursable Costs During Survey. This section includes reimbursable items such as auto rental, lodging, per diem, travel and other miscellaneous costs incurred in order to complete **Part B – Special Services**. Section 3 Reimbursables are invoiced on a lump sum basis.

Special Considerations

The following special considerations are required for this project but will be completed by subconsultants to the Engineer. The cost for this work will be included in the engineering contract agreement with the Sponsor and the costs are in addition to the engineering fees outlined above.

Geotechnical Investigation. Soil samples for analysis must be taken for the project site. Investigation and testing will also be performed to facilitate the pavement design per FAA Advisory Circular (AC) 150/5320-6 (Current Edition), *Airport Pavement Design and Evaluation*. The geotechnical investigation will include the following:

- Perform a geologic reconnaissance of the project site
- Soil boring and laboratory testing at approximately 15 project locations
- Visual inspection and documentation of each soil boring
- Soil Classification/Atterberg Limits, Liquid Limit (LL), Plastic Limit (PL), Plasticity Index (PI)
- Hydrometer and Water-Soluble Sulfates/Corrosivity
- Moisture/Density Relations
- Swell/Consolidation Potential
- California Bearing Ratio
- Moisture content, density of undisturbed fine-grained samples

Assumptions

The scope of services described previously, and the associated fees, are based on the following rates and assumed responsibilities of the Engineer and Sponsor.

1. For the purposes of estimating the amount of reimbursable expenses which will be incurred by the Engineer, the cost of per diem and lodging are calculated in accordance with current GSA rates. The actual amount to be invoiced for per diem will be in accordance with the published GSA rate at the time of service and may vary from the rate used in the fee estimate. Lodging will be invoiced as an actual expense incurred.

2. It is anticipated there will be a minimum number of trips and site visits to the airport to facilitate the completion of the various phases listed in this scope. The number of trips, as well as the anticipated lengths and details of the trips, are included at the end of each phase above.

3. The Sponsor will provide existing mapping data including as-builts available for the project areas, aerial orthoimagery, subsurface conditions information such as prior geotechnical investigations in the project area and other available information in the possession of the Sponsor.

4. The Sponsor will provide an electronic copy of the current ALP to allow for updating of the plan upon completion of the project.

5. The Sponsor will coordinate with tenants as required to facilitate field evaluations and construction.

6. All engineering work will be performed using accepted engineering principles and practices and provide quality products that meet or exceed industry standards. Dimensional criteria will be in accordance with FAA AC 150/5300-13 (Current Edition), *Airport Design,* and related circulars. Construction specifications will be in accordance with FAA AC 150/5370-10 (Current Edition), *Standard Specifications for Construction of Airports,* and the Northwest Mountain Region's Regional Updates for Specifying Construction of Airports and related circulars. Project planning, design, and construction will further conform to all applicable standards, including all applicable current FAA Advisory Circulars and Orders required for use in AIP-funded projects and other national, state, or local regulations and standards, as identified and relevant to an airfield design and construction project.

7. The Engineer will utilize the following plan standards for the project:

   - Plans will be prepared using the Engineer's standards, unless the Sponsor provides its own standards upon Notice to Proceed.
   - Plan elevations will be vertical datum NAVD 88 derived from the existing control network.
   - Plan coordinates will be based on horizontal datum NAD 83/2011 State Plane Coordinates derived from the existing control network.
   - All plans will be stamped and signed by a state-licensed Professional Engineer, or Professional Land Surveyor, as required.
   - Plans prepared by subconsultants will be prepared using the same base maps, the same coordinate systems and the same plan layout and format as plans prepared by the Engineer.
   - The guidance included in FAA Memorandum, *FAA Review of Construction Plans and Specifications for AIP Funded Projects*, will be reviewed, incorporated and will supplement the Engineer's standards.

8. The Engineer will utilize the following assumptions when preparing the project manual for bidding and construction of the project:

   - The project manual Contract Documents will be developed jointly by the Sponsor and the Engineer.
   - The Engineer is responsible for developing the contents of the document and including the Front-End documents which will be reviewed by the Sponsor.
   - FAA General Provisions and required contract language will be used.

9. The Engineer must maintain records of design analyses and calculations consistent with typical industry standards, as required by the FAA, for a period of three years after the project is closed by the FAA.

10. Because the Engineer has no control over the cost of construction-related labor, materials, or equipment, the Engineer's opinions of probable construction costs will be made on the basis of experience and qualifications as a practitioner of his/her profession. The Engineer does not guarantee that proposals for construction, construction bids, or actual project construction costs will not vary from Engineer's estimates of construction cost.

11. An AC 150/5300-18B (or Current Edition) compliant survey is not required as a part of this project. No data will be submitted to Airports GIS (AGIS) through the Airport Data and Information Portal (ADIP).

Additional Services

The following items are not included under this agreement but will be considered as extra work:

- Due to the recent changes to the Federal DBE program, no services for setting DBE Program or Project Goals can be provided at this time, and are not included in this scope of work. If these services are requested after the new certification process has been completed, and notice of completion is provided by the Civil Rights Office, Certifying Agencies, or FAA, they will be under a separate scope of work, or an amendment to this scope of work.
- Redesign for the Sponsor's convenience or due to changed conditions after previous alternate direction and/or approval.
- Submittals or deliverables in addition to those listed herein.
- If a project audit occurs, the Engineer is prepared to assist the Sponsor in gathering and preparing the required materials for the audit.
- Serving as an expert witness for the Owner in any litigation, surety claim, contractor bond activation, or other proceeding involving the project.
- Additional or extended services during construction made necessary by extension of contract time, non-concurrent work, or changes in the work.
- Legal, surety, or insurance support, coordination, and representation.

Extra Work will be as directed by the Sponsor in writing for an additional fee as agreed upon by the Sponsor and the Engineer.

Exhibit B: Compensation

AIRPORT: Cedar City Regional Airport
AIP/WFOL NO.: 3-49-0065-055-2026
PROJECT NAME: Reconstruct/Rehabilitate TW A and Rehabilitate East General Aviation Apron - Phase I Design
DATE: April 21, 2026

WOOLPERT

FEE BREAKDOWN

Labor Category	Total Hours	Billing Rate	Total Cost
1.0 Preliminary Design Phase (Lump Sum)			
Practice Operations Leader	2 hrs.	x $ 350.00 /hr = $	700.00
Pgrm Dir II	52 hrs.	x $ 332.00 /hr = $	17,160.00
Senior Engineer Project Mgr I	190 hrs.	x $ 310.00 /hr = $	58,900.00
Consultant I	20 hrs.	x $ 290.00 /hr = $	5,900.00
Engineer Project Mgr II	52 hrs.	x $ 235.00 /hr = $	12,220.00
Engineer Project Mgr I	24 hrs.	x $ 215.00 /hr = $	5,160.00
Engineering Techn III	32 hrs.	x $ 175.00 /hr = $	5,600.00
Engineering Techn II	24 hrs.	x $ 155.00 /hr = $	3,720.00
Project Coordinator II	8 hrs.	x $ 155.00 /hr = $	1,240.00
Senior Planner I	8 hrs.	x $ 290.00 /hr = $	2,320.00
SUBTOTAL	412 hrs.	SUBTOTAL $	112,920.00
Reimbursables			
Auto Rental	Day	x $ 130.00 /Day=	
Lodging - Tax & Fees	Day	x $ 130.00 /Day=	
Per Diem	Day	x $ 68.00 /Day=	
Travel & Airline Costs	Trip	x $ 500.00 /Trip=	
		SUBTOTAL $	-
PHASE SUBTOTAL		$	112,920.00

Labor Category	Total Hours	Billing Rate	Total Cost
2.0 Design Phase (Lump Sum)			
Pgrm Dir II	108 hrs.	x $ 332.00 /hr = $	35,840.00
Senior Engineer Project Mgr I	476 hrs.	x $ 310.00 /hr = $	147,560.00
Quality Control Manager	82 hrs.	x $ 285.00 /hr = $	23,370.00
Senior Engineer Project Mgr I	172 hrs.	x $ 310.00 /hr = $	53,320.00
Engineer Project Mgr II	536 hrs.	x $ 235.00 /hr = $	125,960.00
Engineer Project Mgr I	84 hrs.	x $ 215.00 /hr = $	18,060.00
Engineer In Training I	196 hrs.	x $ 175.00 /hr = $	34,300.00
Engineering Techn III	640 hrs.	x $ 175.00 /hr = $	112,000.00
Engineering Techn II	136 hrs.	x $ 155.00 /hr = $	21,080.00
Project Coordinator II	24 hrs.	x $ 155.00 /hr = $	3,720.00
SUBTOTAL	2452 hrs.	SUBTOTAL $	575,240.00
Reimbursables			
Auto Rental	5 Day	x $ 130.00 /Day= $	650.00
Lodging - Tax & Fees	Day	x $ 130.00 /Day=	
Per Diem	6 Day	x $ 68.00 /Day= $	408.00
Travel & Airline Costs	Trip	x $ 500.00 /Trip=	
		SUBTOTAL $	1,058.00
PHASE SUBTOTAL		$	576,298.00

LABOR HOUR BREAKDOWN

TASK		LABOR CATEGORY										
Start Date: End Date:		Practice Operations Leader	Prgrm Dir II	Senior Engineer Project Mgr I	Consultant I	Engineer Project Mgr II	Engineer Project Mgr I	Engineering Techn III	Engineering Techn II	Project Coordinator II	Senior Planner I	Phase Ram Costs
1.0	**Preliminary Design Phase (Lump Sum)**											
1.01	Coordinate and Attend Meetings with the Sponsor and FAA		16	32	16	8	8					$ 11,120.00
1.02	Prepare Project Scope of Work and Contract	2	4	16						4		$ 7,600.00
1.03	Prepare Preliminary Cost Estimating			16		8	8					$ 4,560.00
1.04	Provide Project Coordination		16	84		16	4					$ 31,840.00
1.05	Review Existing Documents			4		4	4	8				$ 4,440.00
1.06	Coordinate Topographical Survey			8		4		16				$ 6,120.00
1.07	Coordinate Geotechnical Investigation			8								$ 1,480.00
1.08	Prepare Federal Grant Application		4	8	4				8	4		$ 8,840.00
1.09	Prepare Environmental Documentation		4	8				8			8	$ 7,520.00
1.10	Prepare Quarterly Performance Reports - Design		4	4		4			8			$ 4,760.00
1.11	Manage BlackCat Files		4	2		8			8			$ 3,760.00
	TOTALS	2	52	190	20	52	24	32	24	8	8	$ 112,920.00
	PERCENTAGES	0%	13%	46%	5%	13%	6%	8%	6%	2%	2%	

TASK		LABOR CATEGORY										
Start Date: End Date:		Prgrm Dir II	Senior Engineer Project Mgr I	Quality Control Manager	Senior Engineer Project Mgr I	Engineer Project Mgr II	Engineer Project Mgr I	Engineer In Training I	Engineering Techn III	Engineering Techn II	Project Coordinator II	Phase Ram Costs
2.0	**Design Phase (Lump Sum)**											
2.01	Conduct Design Site Visits		40			20		16				$ 19,900.00
2.02	Analyze Topographical Survey Data		4			8			24			$ 7,520.00
2.03	Analyze Geotechnical Investigation Data	4	16			4	4					$ 4,080.00
2.04	Prepare Pavement Design	8	16			16	16					$ 14,800.00
2.05	Prepare Existing Utility Inventory	2	4			8						$ 3,760.00
2.06	Prepare Preliminary Contract Documents	4	8			8	24			16		$ 13,320.00
2.07	Prepare Construction Safety and Phasing Plan (CSPP)	4	8			24			12	8		$ 17,760.00
2.08	Prepare Preliminary Construction Plans											
	Cover Sheet	1	2			4			8			$ 2,760.00
	Index of Drawings/Summary of Approximate Quantities & General Notes	2	4			8			40			$ 10,760.00
	Master Legend & Abbreviations	1	2			4			16			$ 5,520.00
	Survey Control Plan	1	2			8			16			$ 5,520.00
	Geotechnical Investigation Plan	1	2			4			8			$ 2,760.00
	Overall Phasing Plan	1	4			16			24			$ 9,520.00
	Construction Safety Notes & Details	1	4			4			16			$ 6,250.00
	Construction Phasing Plan	2	8			24			40			$ 15,760.00
	Environmental Exhibit	2	8			8			8			$ 6,430.00
	Demolition Plan	2	4			16			40			$ 12,640.00
	Geometric Layout Plan	2	8			16			48			$ 15,500.00
	Taxiway Plan and Profile	2	4			16			48			$ 14,240.00
	Apron Grading Plan	3	4			16			40			$ 12,660.00
	Typical Sections	2	8			16			40			$ 13,900.00
	Pavement Marking Plan	2	4			16			32			$ 11,280.00
	Pavement Marking Details	2	4			8			24			$ 7,880.00
	Electrical Notes and Legend	2	4		8			4	8			$ 5,240.00
	Electrical Demolition Plan	2	4		16			32	8			$ 11,800.00
	Electrical Layout Plan	2	4		40			40	8			$ 17,700.00
	Electrical Layout Details	2	4		40			40	8			$ 17,700.00
2.09	Prepare Technical Specifications	4	40		24	32		24	8	24	8	$ 19,240.00
2.10	Prepare Special Provisions	4	16			16				8	8	$ 11,120.00
2.11	Prepare Drainage Analysis and Storm Drainage Design	4	8			24	24		16			$ 13,640.00
2.12	Compile/Submit Permits	2	4			8						$ 3,760.00
2.13	Compile/Submit FAA Form 7460	2	8						4	8	8	$ 6,120.00
2.14	Calculate Estimated Quantities	4	32		16	48	8	16	8			$ 19,400.00
2.15	Prepare Estimate of Probable Construction Cost	4	16		8	16	8	8				$ 13,640.00
2.16	Prepare Engineer's Design Report	4	40		8	40				24		$ 26,080.00
2.17	Review Plans at 30%, 60%, and 90% Complete	8	80		8	32		8	48	24		$ 50,960.00
2.18	Provide In House Quality Control			80								$ 22,600.00
2.19	Prepare and Submit Const. Plans, Specs., Const. Docs., and Design Report	4	24		8	24	8	8	24			$ 24,200.00
2.20	Prepare Airfield Signing and Marking Plan	2	4			8			16			$ 6,560.00
2.21	Prepare Requests for Reimbursement	2	4							16		$ 4,360.00
2.22	Prepare and Submit Design Closeout Report	8	16			8				16		$ 11,960.00
	TOTALS	108	476	80	132	536	64	196	640	136	24	$ 575,240.00
	PERCENTAGES	4%	19%	3%	5%	22%	3%	8%	26%	6%	1%	

Labor Category	Total Hours		Billing Rate			Total Cost
3.0 Design Survey Phase (Lump Sum)						
Geospatial Project Mgr II	12 hrs.	x	$ 293.83 /hr	=	$	3,820.00
Surveyor III	16 hrs.	x	$ 220.92 /hr	=	$	3,530.00
Survey Field Tech III	114 hrs.	x	$ 145.03 /hr	=	$	16,530.00
Geospatial Specialist I	36 hrs.	x	$ 140.03 /hr	=	$	5,040.00
Geospatial Specialist II	12 hrs.	x	$ 175.03 /hr	=	$	2,100.00
SUBTOTAL	190 hrs.		SUBTOTAL		$	30,010.00
Reimbursables						
Survey Field Vehicle	11 Day	x	$ 135.00 /Day=		$	1,485.00
Survey Lodging +Tax & Fees	10 Day	x	$ 130.00 /Day=		$	1,300.00
Survey Per Diem	11 Day	x	$ 68.00 /Day=		$	748.00
Survey Supplies & Equip.	11 Each	x	$ 150.00		$	1,650.00
Survey Travel & Airline Costs	Trip	x	$ 500.00 /Trip=			
			SUBTOTAL		$	5,183.00
PHASE SUBTOTAL					$	35,193.00

TASK			LABOR CATEGORY											Phase Item Costs
	Start Date:	End Date:	Geospatial Project Mgr II	Surveyor III	Survey Field Tech III	Geospatial Specialist I	Geospatial Specialist II							
3.0	Design Survey Phase (Lump Sum)													$ 30,010.00
3.01	Perform Topographical Survey		12	16	114	36	12							
		TOTALS:	12	16	114	36	12	0	0	0	0	0		$ 30,010.00
		PERCENTAGES:	6%	8%	60%	19%	6%	0%	0%	0%	0%	0%		

	CONTRACT HOURS		PHASE FEE	REIMBURSABLE COSTS	TOTAL COST
PART A - BASIC SERVICES (LUMP SUM)					
1.0 Preliminary Design Phase (Lump Sum)	412		$ 117,920.00	$	$ 117,920.00
2.0 Design Phase (Lump Sum)	2452		$ 575,240.00	$ 1,058.00	$ 576,298.00
	2864	SUBTOTAL	$ 688,160.00	$ 1,058.00	$ 689,218.00
PART B - SPECIAL SERVICES (LUMP SUM)					
3.0 Design Survey Phase (Lump Sum)	190		$ 30,010.00	$ 5,183.00	$ 35,193.00
	190	SUBTOTAL	$ 30,010.00	$ 5,183.00	$ 35,193.00
SUBCONSULTANT 1					
Geotechnical Investigation - Landmark Testing & Engineering				$	$ 60,000.00
				SUBCONSULTANT SUBTOTAL	$ 60,000.00
TOTAL	3,054.0		$ 718,170.00	$ - $ 6,241.00	$ 784,411.00

*For the purposes of estimating the cost of mileage, per diem, and lodging are calculated in accordance with applicable IRS and GSA guidelines. At the time of invoicing mileage will be invoiced in accordance with published IRS rates at the time of service and per diem will be invoiced in accordance with published GSA rates at the time of service. Lodging will be invoiced as actual expense incurred except in the cases where a specific client requirements exist that limit lodging to GSA standards.

Rev. 07.06.24

CEDAR CITY COUNCIL
AGENDA ITEM 14

DECISION PAPER

TO: Mayor and City Council

FROM: Mike Phillips

DATE: 17 May 2026

SUBJECT: Fire Department policy manual.

PROBLEM: While the Fire Department is authorized to maintain policies that differ from City policy, with exceptions related to employee compensation must have council approval. Policy 911.4.6-c governs comp time directly affecting compensation practices and therefore warrants this discussion.

Reducing the maximum comp time balance from 480 hours to 400 (six years ago) and now to 300 hours is justified for several operational and financial reasons. Excessive comp time accrual creates significant long-term financial liability for the City, particularly when employees separate from service, retire, or are promoted into higher-paying positions where accrued time must be paid out at current wage rates. Lowering the cap helps control unfunded liabilities and improves budget predictability. The current Fire Departments comp time liability is more than $100,000 and will be going up with raises just approved.

The Fair Labor Standards Act (FLSA) permits public safety employees to accrue up to 480 hours of comp time; however, FLSA establishes this as a maximum allowable threshold, not a recommended operational standard. Agencies are permitted to adopt lower accrual limits based on organizational, fiscal, and operational needs. Establishing a lower cap of 300 hours remains fully compliant with FLSA requirements while providing a more sustainable and fiscally responsible framework for managing compensation liabilities.

Operationally, large compensatory time balances can create staffing challenges when employees utilize extended leave periods, increasing overtime costs and reducing scheduling flexibility. A lower cap encourages employees to utilize earned time more consistently throughout the year, supporting workforce wellness while maintaining adequate staffing levels for emergency response operations.

Reducing the balance limit to 300 hours also promotes greater consistency with standard municipal compensation practices. Cedar City nonpublic safety employees can have up to 240 hours and many cities only allow up to 80 hours for public safety personnel. The revised limit still provides employees with substantial flexibility to bank compensatory time while balancing the City's fiscal responsibilities and operational needs.

Additionally, Fire Department personnel hired after July 17, 2025, are limited to a maximum comp time balance of 100 hours. This standard was implemented specifically to reduce future financial liabilities and prevent the continued accumulation of excessive compensatory time balances within the organization. Establishing a lower cap for new employees demonstrates the Department's long-term commitment to fiscal responsibility, sustainable staffing practices, and preventing the perpetuation of existing compensation liabilities.

Please see the attached policy 911 Pay Practices and Work Schedules (Exception to City Policy). The paragraph for this discussion is found on page 4 at the top of the page section c.

RECOMMENDATION: Approve the Fire Department Policy 911.4.6 governing comp time balances.

Pay Practices and Work Schedules (Exception to City Policy)

Effective Date	Revised Date
05152026	05152026

911.1 PURPOSE AND SCOPE

This policy establishes and defines Cedar City Fire Department (CCFD) policy when contrary to the operating policy of Cedar City, because the work schedule and hours in a day are different than all other city employees. This policy also establishes a standard set of guidelines to ensure the equitable distribution of available shifts using part-time personnel to fill night, extended night, and 24-hour shifts.

This Policy defines the work schedule as applicable to the full time, and paid volunteer staff of Cedar City Fire Department and applies to fire department personnel.

911.1.1 RELATED DOCUMENTS

- Cedar City Policy

911.2 POLICY

It is the policy of the Cedar City Fire Department that all personnel understand and follow the pay practices and work Schedules as outlined in this policy

911.3 RESPONSIBILITIES

The following personnel have these responsibilities:

The Fire Chief (or his designee) - Is responsible for ensuring that this policy is understood and followed.

The Fire Marshal - Oversees the part-time/Volunteer compensation program; Maintains the compensation data applicable to the part-time /volunteer firefighters

The Captain - Understands, follows and enforces this policy as applicable

The Fire (Shift)Captain: -Understands, follows and enforces this policy as applicable.

Firefighter: - CCFD employees full-time & part time shall show up on-time, in uniform, and ready for work, and understand and follow this policy as applicable

911.4 PROCEDURE SECTION 1 - FULL TIME STAFF

Full-time staff will follow this procedure:

911.4.1 DEFINITIONS

a. **Full-Time Shift Personnel** – Firefighters who work 48/96-hour work shifts and are scheduled to work 2756 hours per year. These firefighters are regular full-time employees by city policy but their regular work schedule is based on a 24-day work cycle in which they work 182 regular hours. Shifts will begin at 08:00 and personnel are expected to be in uniform at the time of shift change.
b. **Full-Time Non-shift personnel** – Firefighters who normally work (80) eighty regular hours over a two-week work cycle. The Fire Chief has the authority to alter this schedule to maintain the minimum staffing level of (4) firefighters which is required to staff an engine.
    1. Full Time personnel, when working a battalion chief shift (Tuesday to Tuesday) will receive 1 hour of comp time per 24-hour period which may be washed in the same 2-week pay period. Calls, requiring battalion chief response are counted as call backs.
c. **Day** – When the city policy uses the word day, it is referring to an equivalent of (8) eight hours.
d. **Overtime**—All personnel must be mindful of and exercise fiscal responsibility in the use of public funds and resources. Overtime pay requires particular attention because it constitutes a sizable expenditure of department funds that is provided at premium rates. Without adequate controls, unplanned expenditures can create budget overruns and divert resources from key operational areas. With that said it is the policy of the department to effectively manage the use of overtime in a responsible and judicious manner.
e. **Scheduled Overtime** -- Is overtime that is built in to the budget as part of the 48/96 schedule in accordance with FLSA requirements. There are 10 hours of scheduled overtime each 24-day cycle for those working the 48/96 shift schedule. If time off is taken during the 24-day cycle the scheduled overtime goes away for that cycle.
f. **Overtime Approval** –The Fire Chief will evaluate and approve all overtime resulting from the need to backfill shifts and etc.
g. Clean Shaven - Shall be as outlined in OSHA Respiratory Protection Standard 29 CFR 1910.134, facial hair that interferes with the face to face piece seal or valve function shall not be permitted.
h. **Good Standing** - In order to maintain "Good Standing" status, firefighters must meet the minimum drill and run attendance requirements, maintain physical fitness requirements applicable to their job title, and maintain a clean criminal record as required via Cedar City Policy.

911.4.2 OVERTIME MANAGEMENT

Overtime shall be managed as follows:

a. The Fire Chief (or designee) will evaluate and approve all overtime
b. No task or function shall be performed on overtime that could otherwise be performed during regular work hours.
c. Supervisors shall establish and hold personnel responsible for a level of performance during standard work hours that minimize the need for overtime and/or the need for additional personnel.
d. Time spent in regular drills or training will be paid as overtime or comp time as directed by the Fire Chief.
e. Only overtime required to meet vital service demands of the department shall be authorized; and will be paid for the following life safety-oriented calls:
    1. **Working structure fires**
    2. **Any ARFF incident**
    3. **Motor vehicle accidents requiring extrication**

4. **Technical level hazardous materials responses**
5. **2nd alarm wildland fires**
6. **As requested by the Fire Chief or his designee**

f. Overtime and Comp-time (***Full Time Shift Personnel***) – for full-time shift personnel, any time worked over 182 hours in a (24) day cycle will be compensated with comp-time or overtime.

g. Overtime and Comp-time(***Full Time Non-Shift Personnel***) – for full-time non-shift personnel, anything over a normal (80 hour) shift will be compensated with comp-time, overtime, or may be compensated by taking time off somewhere in the two-week work cycle.

911.4.3 COMPENSATION PLAN, EQUALIZATION OF PAY, AND COST OF LIVING (FULL-TIME SHIFT PERSONNEL)

Whereas the full-time shift personnel have had their wages divided by 2,756 hours which lowers their hourly rate due to the nature of a 48-hour shift and 24-day work cycle.

Employees will be paid a base rate of 106 hours bi-weekly based on a 24-day pay period. In the event time off is taken such as vacation, sick leave, comp etc., it is documented and subtracted during the second half of of the 24-day cycle pay period.

911.4.4 EMERGENCY LEAVE

Up to 24 hours of leave may be granted to attend to the death of an immediate family member as defined by city policy.

911.4.5 LEAVE TIME

a. When leave time is used (vacation, sick, holiday, and emergency leave) it can only be used to cover the regularly scheduled hours of compensation. When full-time shift personnel takes leave, it can only be used to cover the regularly scheduled 182 hours of compensation. If time is taken off in a 24-day cycle the first thing to be used is any holiday pay that falls in that pay period. Scheduled overtime (regularly scheduled time exceeding 182 hours in a 24-day work cycle) is used to cover the regularly scheduled 182 hours. If there is not sufficient scheduled overtime and holiday pay to cover the 182 hours, then leave time may be used to fill the gap.
    1. When leave time off is requested personnel shall complete the Leave Request Form CF-06-01-01 and present it to their direct supervisor for approval.
    2. It is the responsibility of the employee requesting leave time to find coverage as indicated by the supervisor on the Leave Request Form CF-06-01-01, to ensure engine staffing does not fall below a crew of four.
    3. Anytime two or more personnel from the same shift plan to be off at the same time, the Chief shall be notified for approval.

911.4.6 COMP TIME

a. Personnel are compensated with comp time that can be taken as time off at a later date during required training courses and during call-backs when budgeted overtime funds are not available. Or as otherwise directed by the Fire Chief.

b. Comp time is accrued at one and a half times that of regular pay.
    1. When comp time off is requested personnel shall complete the Leave Request Form CF-06-01-01 and present it to their direct supervisor for approval.
c. When an employee's comp time balance is close to the maximum allowable balance (to be maintained at or below 100 hours for those hired after July 17, 2025 and 300 hours for those hired prior to July 17, 2025., the employee may be asked/required to take time off thus reducing the balance to prevent unbudgeted overtime expenditures during above average/high call volume months.
d. It is the responsibility of the employee requesting comp time off to find coverage as indicated by the supervisor on the Leave Request Form CF-06-01-01, to ensure engine staffing does not fall below a crew of four (4).

911.4.7 SICK LEAVE

Sick leave for 48 hour shift personnel is accrued at a rate of 4.89 hrs per pay day and shall conform to FSLA and FMLA requirements as applicable.

In the event someone goes home or calls in sick, an Everbridge text is sent out as soon as possible to back fill the applicable shifts.

911.4.8 SICK TIME BUY-BACK

During the sick time buy-back, a total of up to 31 hours may be sold back to the city applicable to Full Time Shift Personnel that have had their time adjusted based on a 2,756-hour annual compensation schedule.

911.4.9 SHIFT EXCHANGES

a. Shift exchanges are initiated by filling out a shift exchange request form and are allowed under the following circumstances:
    1. The exchange form CF-06-01-02, must be received and approved prior to the actual shift exchange
    2. For 24-hour shift exchanges:
        a. Once approved, the staff member who agrees to work another's shift is responsible for working the agreed shift. Anyone who agrees to work another's shift and then fails to report will be subject to disciplinary action.
        b. Shift exchanges shall not result in overtime that is above the normal compensation that the individual would normally receive for that 24-day cycle.
        c. Shift exchanges are limited to 4 exchanges per year, per employee, 2 of which can be initiated by the individual in need of the exchange and the other 2 by another individual who needs an exchange
        d. A shift exchange may not be scheduled more than 2-weeks in advance unless authorized by the Fire Chief.
        e. A notice of no less than 24-hours is required unless otherwise approved by the Fire Chief
        f. The exchanged shifts must fall within the 24-day pay period
b. Partial shift exchanges.
    1. In the event an employee needs to take time off during a regularly scheduled 48-hour shift the following process shall be followed:

2. It is the responsibility of the employee requesting the shift exchange to complete the applicable documentation. It is the responsibility for the employee accepting the exchange to show up on time and cover the respective shift.
3. The Exchange for CF-06-01-02, must be received and approved prior to the actual shift exchange.
4. Partial shift exchanges must fall within the same 24-day cycle
5. Partial shift exchanges are limited to 1 exchange per 24-day cycle and 4 exchanges per year, per employee.
6. Partial shift exchanges are limited to 4-hours maximum.
7. The shift exchange must be posted on the vacation calendar.

911.4.10 HOLIDAY PAY

a. Holiday pay is based on an 8-hour work-day and is applied as follows:
    1. Non-shift personnel are not required to report to work on paid holidays and are compensated with 8-hours of pay for each day of a paid holiday.
    2. 48-Hour full time shift personnel accrue 8-hours of time during paid holidays that is placed in the holiday bank in the time keeping system, this time must be washed within 90 days from July 01, and prior to the next fiscal year unless vacation or comp time has been scheduled during the 24-day cycle in which the holiday lands, in that case, the 8-hours of Holiday pay supplements the Vacation/comp time to make up the 182-hour 24-day cycle.
    3. Full time shift personnel receive holiday differential pay (at the current rate of 5% above their hourly wage) for the hours worked during a holiday.
    4. Volunteer personnel that fill holiday shifts will receive holiday premium pay for the hours worked during the holiday as noted below.

911.4.11 TRAINING PAY

Pay for job related training that is outside the weekly drills is compensated upon the Fire Chief's approval as follows:

1. Full-time personnel attending department required training are paid their regular compensation, for hours spent training during normally scheduled shifts, while at the training location and during travel periods that are directly to and from training sites outside of Cedar City, and that occur immediately before and after said training. Required training hours that fall outside normally scheduled hours are compensated with comp time or over time as directed by the Chief.
2. Full time personnel attending training that is not required by the department, however is relative and beneficial to the department, and upon approval from the Chief, will receive regular compensation for training hours received during a regularly scheduled shift, however, no compensation beyond those regularly scheduled hours will be provided. When budget permits, fees and travel may be covered upon the chiefs approval.
3. In the event the employee arrives at home in the middle of a regularly scheduled shift, the employee is sent home and comp time may be used to make up the hours that would have been worked during that shift.
4. Tuesday night training drills are paid based on the actual time of the drill hence a one (1) hour drill counts as one (1)-hour of pay, a four (4)-hour drill counts as four (4)-hours and etc.

911.5 SLEEP REQUIREMENTS

- Sufficient sleep is defined as five consecutive hours of rest from 21:00-07:00 on the first night of the first shift
- This designation is FLSA compliant
- If sufficient sleep is not achieved on the first night of the tour, the Captain will work with his/her assigned supervisor to take needed rest periods during the second shift
- Rest periods on the second shift can be accomplished in the following ways:

1. Allow crews to sleep in later in the morning and have an alternative time to be in uniform
2. Allow shortened lunch period, opting for an easy and shortened meal prep and a 30-45 minute rest period during lunch
3. Rotating personnel during the day for rest breaks in the bedrooms,keeping four fighters ready to go at all times

911.6 PROCEDURE SECTION 2 VOLUNTEER/PART TIME STAFF

Volunteer and Part-time Staff will follow this procedure:

911.6.1 CEDAR CITY FIREMAN'S RELIEF ASSOCIATION

Members of the Cedar City Volunteer Fireman's Relief Association, although monetary compensation is received for; regular work shifts, emergency incidents and in most cases training, may at times, volunteer time and services, which is uncompensated for non-emergency, and non-departmental sponsored training.

911.6.2 VOLUNTEER PAY

a. Finders Fee - Anyone on the department who recommends an individual for employment with the Cedar City Fire Department for which the individual passes all the required training and is hired will receive $500. If that individual maintains good standing (meeting drill and run attendance requirements) for (2) years after hire, the individual who recommended them shall receive an additional $1000.
b. Paid volunteer firefighters receive compensation as follows:
    1. Volunteer compensation checks are issued on a semi-annual schedule. The first compensation check is issued for the last pay period in June, and the second check is issued during the last pay period of December.
    2. Volunteer Compensation checks include compensation for the following services:
        a. Percentage of Training Attended
        b. Percentage of Fire runs made
        c. Nights
    3. Volunteer compensation varies based on position.
        1. Once Firefighters graduate from the recruit academy they are considered Firefighter 1 and are provided the compensation package for that position, after 5-successful years of service they are promoted to firefighter 2 and are compensated accordingly. Compensation rates increase with each increase in position (see job descriptions for specific position requirements). Cedar City Fire Department position progression is as follows:
            a. recruit

b. Firefighter I
c. Firefighter II
d. Engineer
e. Captain
f. Battalion Chief Trainee
g. battalion Chief
h. Assistant Chief
i. Senior Officer

911.6.3 NIGHT-SHIFT

The night shift schedule for volunteer firefighters will be posted on the dispatch computer in the main station and lists the applicable dates for those responsible for spending the night at the station. A regular night shift begins at 21: 00 hours and ends at 07:00 the following morning. The compensation rate for a regular night shift is ($100 dollars). Night shifts are paid out on the semi-annual fire run check.

1. Night-shifts are assigned based on an alphabetical/random rotation to those firefighters that possess a Firefighter 1, minimum certification.
    a. On Monday's and Friday's night shift firefighters have the option and are encouraged to upgrade to an extended shift.
    b. In cases where a firefighter may not be able to work specific nights due to special circumstances, they are encouraged to consult with their respective Station Captain to have their schedule adjusted to allow them to participate.
    c. The Captain may also make "special circumstances" adjustments to the schedule at their descrition to prevent issues such as having too many level 1 firefighters assigned to a shift.
2. Firefighters are responsible for ensuring their night on the station is filled. If they are not able to stay their alphabetically/random assigned night, they may trade nights with another firefighter or can call the station to have the on-duty staff find a replacement via the Everbridge system. When trading shifts it is the responsibility of the firefighter initiating the trade to notify the Captain in charge of the affected shift for approval and to facilitate updating the night calendar by removing out their name and adding in the replacement.
3. A member of the full-time staff will make one attempt to call and remind the scheduled night shift firefighter that it is their night during the day-time as a courtesy.
    a. Firefighters who do not show up for their shift will be removed from the list after three (3) no shows annually.
4. It is the responsibility of the night shift firefighter to make and strip down the bed in their applicable room and to sign the night shift calendar upon completion of the shift.
5. During the night the firefighter becomes part of the 4-man minimum staff and therefore shall have their uniform with them, shall be clean shaven, and shall perform under the direction of the shift Captain/supervisor
6. When a night shift firefighter is needed to serve as an engineer, a capital "ENG" will be placed on the calendar following their name e.g. Ext M. Newcome ENG and they will be given precedence when soliciting shift coverage.

911.6.4 EXTENDED NIGHT-SHIFTS

1. Extended night shifts begin no later than 17:30 and end at 07:00 the following morning. Compensation for an extended night shift is ($150). Extended night shifts are handwritten in on the night shift calendar and on the vacation calendar that is used to document vacation and comp time days for the full-time staff. Extended night shifts are paid out on the regular bi-weekly schedule..
2. Extended night shifts are selected and filled using Everbridge and are based on the same process used to fill a 24-hour shift with the following exceptions:
    a. It is allowable to bump the regular night shift to an extended shift when there is a need to maintain the 4-firefighter engine company in times where a full-time staff member is not available between 17:00 hrs and 20:00 hrs. During these cases the regular night shift firefighter will be contacted for approval.
    b. On Monday's and Friday's it is optional (and encouraged) for the regular night firefighter to come in atr 17:00 changing the regular night into an extended shift.
    c. In the event the extended shift is the result of a full time staff member taking time off, an everbridge will be sent to fill the shift in accordance with the Weekend and Holiday 24-hour-shift Compensation policy.
    d. When a extended shift firefighter is needed to serve as an engineer, a qualified engineer will be given preference over those who are not qualified.
    e. A capital "ENG" will be placed on the calendar immediately following thier name, e.g. M Newcome ENG.
3. It is the responsibility of the extended night shift firefighter to make and strip down the bed in their applicable room and to sign the night shift calendar upon completion of the shift.
4. During the extended shift the firefighter becomes part of the 4-man minimum staff shall be in uniform, be clean shaven and perform work under the direction of the shift supervisor.
5. It is the responsibility of the extended night shift firefighter to find a replacement in the event they are not able to work their shift as follows:
    a. If the extended night shift fire fighter is the designated engineer for the respective shift, a replacement of equal stature must be utilized.
    b. An everbridge may be used to help find a replacement when other means are unsuccessful.
    c. The Captain overseeing the shift shall be notified and approve of the change.
    d. The google calendar and white board shall be updated to reflect the change.
6. Firefighters who do not show up for their shift will be removed from the list after three (3) no shows annually.

911.6.5 WEEKEND AND HOLIDAY 24-HOUR SHIFT COMPENSATION

Weekend and Holiday 24-hour our shift compensation schedules will be posted on the message board in the main station listing those who have signed up to work weekend, holiday, and other shifts requiring 24-hour coverage. 24-hour shifts begin at 08:00 and end at 08:00 the following day. Oncoming personnel are required to be in uniform, and clean shaven at the time of shift change. If you fail to show up by 08:30 or show up unshaved, you will be considered a "no show" and a replacement will be called in via an Everbridge notification and will be filled on a first come, first serve basis. Personnel that fail to show up for a shift "no show" will not be permitted to bid on shifts

during the following bid period.. Compensation for a 24-hour shift is ($275), compensation for a 12-hour shift is $175 and holiday compensation is $450.00. 12 and 24-hour shifts are paid out on Fridays and are paid in accordance with a bi-weekly work schedule. Firefighters must achieve a 70% or higher drill attendance to be considered eligible. Firefighters who do not show up for their shift will be removed from the list after three (3) no shows annually.

a. Weekend and Holiday 24-hour shifts are filled via a sign up calendar that is made available during the monthly business meeting as needed (approximately 3 to 4 months in advance) those signing up must be FirefighterI certified and shall be present during business meeting to sign up during the first round sign-ups. Members who are not able to attend buisness meeting due to official department business will be permitted to have a proxy member bid on shifts on their behalf.
    1. The most senior member present will initiate the passing of the calendar based on member seniority. Firefighters are only allowed to sign up (initial the calendar on the desired date) for one (1) 24-hour shift during each round with rounds continuing until all shifts are taken.
    2. In the event all shifts are not taken by the end of business meeting, the Fire Marshal will take possession of the list, which is made available as follows:
        1. Wednesday or the following day - members not able to attend the meeting due to reasonable conflicts are allowed to sign up for up to two (2) shifts.
        2. Thursday - all members are allowed to sign up for up to two (2) additional shifts.
        3. Friday - members may sign up for any or all of the remaining shifts where applicable.
b. The following outlines directives to be followed when backfill staffing is required.
    1. Instances where an immediate backfill is required to maintain minimum staffing such as cases where someone is sick, family Emergencies, deployment, no shows etc., an everbridge is immediately send and the shift is filled on a first come first served basis.
        1. Where applicable, Captains and Engineers are given preference depending on the position requiring backfill; this will be communicated via the everbridge message and recorded on the applicable calendar by placing a capital "ENG" after the members name e.g. 24 M Newcome ENG.
    2. The following process shall take place where backfilling shifts are the result of a fulltime staff member taking pre-scheduled time off for vacation, comp time, training etc.
        1. An Everbridge will be sent in the AM (between the hours of 8:00 to 13:00) detailing the backfill such as regular night, extended night, daytime coverage, and or 24-hour coverage with preference given to Captains or Engineers as applicable. The Everbridge message will also detail how those interested in covering the shift are to respond via the Everbridge polling feature.
            1. Those interested in backfilling a shift will communicate their availability by responding back to the Everbridge text message by texting the appropriate number(s).
                1. Note: those interested in working shifts must also meet the current call and training requirements (70% drill attendance and no lett than 15% fire runs) and must have attended all mandatory drills.
        2. At 18:00 hours or at the next earliest convenience (After 18:00 hrs.) the polling results will be reviewed and shift(s) will be assigned to the next person on rotation .
        3. The applicable captain will notify those awarded shifts via text message.

4. A closeout everbridge will then be sent stating that the shift has been filled.
5. If no one responds to the everbridge polling, the Captain will fill the shift at their descrition.

c. Holiday compensation
   1. In addition to the holidays identified in Cedar City policy, Volunteers also receive holiday premium compensation for Easter, Fathers Day and for Mothers day.

911.6.6 DRILLS AND FIRE CALLS

A. Drills are tracked via the training form and Excel Spreadsheet for which a roll call of those in attendance is maintained. In order to receive credit for the drill, the firefighter must show up in the appropriate PPE, be clean shaven, actively participate in the training and sign the training record. At the beginning of drill the designated full-time staff member will take role marking those in attendance on the training record and making note of anyone showing up later than 15 minutes late. At the end of training firefighters are required to sign the roll and the total training time is calculated.
   1. Firefighters who show up late (25% to 50% of the total drill) will only receive 50% credit for the drill.
   2. Firefighters who show up more than 50% late will receive no credit for the drill unless otherwise authorized by the Training Officer and Fire Chief.
   3. Firefighters who show up but do not actively participate will receive no credit for the drill.
   4. Firefighters who don't sign the training record may not receive credit for the drill.
   5. Firefighters who leave early fall under the 25% to 50% rules.

B. Fire runs are tracked via the run sheet and are recorded in the Emergency Reporting database. It is the firefighters responsibility to verify they are marked on the run-sheet. Note, firefighters who show up and have no intention of boarding an apparatus, e.g., have somewhere else to be, have pets, children, or other items with them that they are unable to leave them behind will not receive credit for the run.
   1. Extra Hours (at the beginning of the second hour beyond the initial call) will count towards the percentage of runs made as is noted below:
      a. structure fire lasting 4-hours will count as 2-runs in the percentage equation.
   2. Those who respond to the station then to the scene on an apparatus will receive one run for responding to the station, an additional run for boarding the apparatus and then an additional run at the beginning of the second hour. Additional runs will then be awarded at two hour intervals until returning to the station and apparatus is returned to response ready state.

C. Drills and fire runs are paid per the semi-annual schedule and are compensated based on the percentage of drills attended and the percentage of fire calls responded to in accordance with the firefighter pay scale graph. In order to be considered qualified to attend fire runs, a person must have attended 70% of drills and 40% of calls. This is required so that the CCFD is staffed with competent individuals that can capably perform their official duties to aid the citizens of Cedar City. Cedar City Utah Firefighter Pay Scale.
   1. For positions such as Firefighter 1, Firefighter 2, Engineer, Captain, Battalion Chief Trainee, Chaplin, Battalion Chief, and Assistant Chief the pay rate for drills and runs will be in accordance with the pay rate for that particular position. The biannual check consists of a combination of the percentage of fire callsmade plus the percentage of training attended in addition to any night shifts worked in the six month pay period.

D. Training attendance less than 50% = 0.00 and run attendance less than 5% = 0.00. Note: anyone falling below the minimums of 70% drill attendance will not be allowed to sign up for extended shifts, weekend shifts, or Battalion Chief shifts until their attendance meets the minimum required.

E. If a firefighter is meeting the drill attendance requirement, i.e. greater than 50%, but makes less than 15% of the fire runs, the compensation available for drill attendance drops to the 55% level unless prior agreement is approved by the Fire Chief (e.g. Medical or work related absence.

F. For runs that are immediately canceled by dispatch or by the station staff, no run sheet will be generated and the call will not count against those who do not respond as they are not counted as a required call/run in the percentage calculation,

G. Outside Training
   1. Outside Training such as NFA Classes, Wild-land Classes, UFRA sponsored classes that are scheduled in preparation for advancement with the Cedar City Fire Department, and are coordinated through the Chief and Training Officer, may be included in the drill percentage formula to help those who would otherwise fall short on drill attendance due to extenuating circumstances such as work and family related issues. Outside training of this nature is limited to 30% make-up, hence someone with 50% drill attendance could achieve a maximum of 80% drill attendance by attending outside training. (Evidence of training completion shall be provided.

H. Make-up Training
   1. Mandatory training such as Sexual Harassment, physical agility etc. must be completed in the timeframe allotted. In teh event of extenuating circumstances, the Fire Chief and Training Officer must be informed of the circumstances and a plan set in place to get the training completed as soon as possible.
   2. Monthly scheduled drills if missed cannot be made up however, drill percentages may be improved by attending TRT drills which are considered extra credit drills or by attending department scheduled and hosted specialty trainings such as certification classes, officer training classes, hazmat classes, such as Hazmat IQ, Rail Car Emergencies etc. For CCFD hosted trainings 4 hours = 1 drill, hence an 8-hour class is equal to two drills.

Cedar City FD Utah Firefighter Pay Scale.pdf

911.6.7 YEARS OF SERVICE AND SAFETY INCENTIVE

A. As an incentive, Volunteer/part-time firefighters at the end of each year (in addition to the bi-annual and bi-weekly pay), are compensated for their years of service as follows:
   1. 1 - 5 years = $250.00
   2. 6 - 10 years = $600.00
   3. 11 - 15 years = $1200.00
   4. 16 - 35 years = $1300.00 (plus an additional $100.00 per year up to 30 years ($3200.00 maximum).

B. In order to receive "years of service" pay, firefighters must maintain a minimum of 15% fire attendance and 50 training attendance for the year. Firefighters not meeting this standard will receive the previous "years of service" pat at $25.00 per year.. A firefighter attending no training and/or no fire runs will not receive longevity pay.
C. As an additional incentive Volunteer Part Time Firefighters that have not been involved in any work related accidents, will receive a $500.00 Safety Bonus during the July reimbursement. Apparatus driver operators will receive an additional $500.00 if no accidents are recorded.
D. In order to receive the Safety Bonus, Firefighters must maintain attendance at no less than 50% training and 15% fire runs for the year. Firefighters not meeting this standard will not receive a Safety Bonus.

911.6.8 PART-TIME SHIFT WORK

The following applies to part-time firefighters working nights, extended nights, and 24-hour shifts:

a. In order to receive credit for work performed, the firefighter shall be clean shaven and the appropriate uniform shall be worn while on duty.
b. Personal projects are not to be worked on while on shift
c. Firefighters will not be allowed to work more than 3 consecutive 24-hour shifts (72-hours) and shall have a minimum of 12-hours off before working the next shift.
d. Firefighters will fall under the supervision of the assigned shift supervisor and will act in accordance with their requests and assignments.
e. The daily work routine shall be worked anytime a firefighter finds themselves without a direct assignment or is caught up.
f. Free time may be utilized studying fire manuals and publications
g. The Fire Chief reserves the right to make alterations, substitutions, or modifications to this SOP and may approve variances in special circumstances.

911.7 NEW RECRUIT PAY

a. New recruits accepted into the CCFD Training Academy do not receive any compensation until such time that all tests have been successfully completed with passing scores, all applicable certifications achieved, and making the final cut, meaning acceptance as a Volunteer Firefighter for Cedar City Corporation.
b. Once accepted as a Cedar City Volunteer Firefighter, compensation will be provided in accordance with the Pay Schedule applicable to the position.

911.8 WILDLAND CONTRACT FIREFIGHTING (PROJECT FIRES)

The following outlines the framework for CCFD personnel operating on contract wildland fires both in-state and out of state:

a. Reimbursement

1. Volunteers will be paid for the hours worked on the project according to the crew time reports completed while at the project.
2. CCFD full-time staff will receive compensation for the project hours worked minus any 24-hour shifts that would have been worked while away at the project, with those hours being paid in accordance with the regular compensation schedule.
    a. In the event management overseeing the fire, places crews on a 24-hour work schedule, CCFD full-time staff will receive up to the maximum hours (16) allowed of fire pay on their regularly scheduled days off, (note, this begins after the first 48 hours on the fire).
    b. During times when the crew has been placed on severity or other instances where they are receiving a daily schedule of 12-hours or less, and where both crew members are Engine Boss Qualified, the engine boss pay is shifted to the crew member working as a Firefighter, thus receiving the lower wage, while the other crew member receives regular shift pay. This continues to switch back and forth between the two crew members to help maintain an equitable pay for both.
3. All personnel will be paid in accordance with the current approved AD or GS pay rates. The pay rates will be reviewed and approved on an annual basis. Increases in pay rates that do not match increases in the state Memorandum of Understanding (MOU) rates will not be approved.
4. Per-diem compensation will be paid at the Cedar City travel policy rate.
5. When required for travel and approved standby on the project, lodging will be reimbursed by the Department for each night based on the local median lodging rates.
6. Full-time staff returning in the middle of a shift that they are normally scheduled to work, where the shift has already been back-filled will be sent home on a forced comp exempt and comp hours used to cover the remaining hours of the shift, or as otherwise specified by the Fire Chief.

b. Rest and Rehabilitation Pay (After being deployed for 14-days)
    1. 8 hours of R & R pay at the fire rate will be paid on your scheduled days off.

911.9 TIME OFF/LEAVE REQUEST/VACATION TIME/COMP TIME (FULL TIME STAFF ONLY)

This section covers the management of staffing levels, annual leave hours, and to ensure fair and consistent practices in approving leave.

a. At the beginning of each year time off for the upcoming year is evaluated by each shift for any conflicts in desired time off. In the event of conflict that cannot be resolved at the employee level, time off is granted based on a first choice, second choice process and then granted based on seniority and total years of service.
b. When requesting time off, a leave time request form (CF-06-01-01) shall be completed and presented to the immediate supervisor for approval.
    1. In the event of conflict, vacation Time takes precedence over comp time, hence if two employees from the same shift are requesting the same day off and one is requesting the day as vacation and the other is requesting to use comp time, the employee requesting vacation is given preference.
c. The supervisor shall have the authority to approve or disapprove requested leave based on the department's minimum staffing levels (4-man engine-company) note, only one 24-hour shift member will be allowed to be off on any given date, unless otherwise approved by the Fire Chief.

d. It is the responsibility of the employee requesting time off to cover their shift(s) as indicated by the supervisor on the leave time request form, via the Everbridge process described in section 9.10.5.5.b.

911.10 TRANSITION FROM FULL TIME TO VOLUNTEER/PART TIME

This section covers Cedar City Fire Department's policy for when a full-time staff member retires or terminates full time employment and wishes to continue employment as a volunteer/part time employee.

Full time staff members, when in good standing with the department, may change their status from full-time to volunteer/part time without going through a re-hiring process and may assume a volunteer/part time position that is of equal rank. Longevity pay will be based on total years of service.

911.11 REVISION HISTORY

a. Modified by Russel Brunson to bring up to date with the new format, Approved October 31, 2016.
b. Modified to clarify extra hours for Volunteer/Part-time staff, stating that additional runs are accumulated during a single call at the beginning of the third hour, Approved February 20, 2017.
c. Added allowances for partial shift exchange. Authored by Russel Brunson, Approved May 17, 2017.
d. Added allowances for back to back shift exchanges. Authored by Russel Brunson, Approved January 1, 2019.
e. Added instruction applicable to R&R pay, and for Full Time firefighters returning home from a contract fire in the middle of a shift for which they would normally be scheduled to work. Authored by Russel Brunson, Approved, September 23, 2019.
f. Added reference to Volunteer Pay Schedule, and added criteria applicable to longevity reimbursement. Authored by Russel Brunson, Approved October 11, 2019.
g. Added section covering Training Pay, Authored by Russel Brunson, Approved January 14, 2020.
h. Added specificity to comp time management requiring comp time to be managed at or below 400 hrs. Authored by Russel Brunson, Approved 02/05/2020.
i. Added reference to the Everbridge system to be used when filling shifts and added specificity to the process of filling shifts. 04/24/2020.
j. Formatted to Lexipol Format 04/24/2020
k. Removed reference to and deleted provisions for Comp time exempt, changed pay periods from 28-day cycles to 24-day cycles, and from 212 hours to 182 hours worked in a 24-day work cycle. Authored by Russel Brunson, Approved June 15, 2020
l. Modified the drills and fire calls section 910.5.6 to provide clarity on actions to take place for those showing up late for training. Also added requirement for firefighters to provide evidence of outside training when requesting to use such training as make-up for missed drills to improve drill attendance score. Authorized by Russel Brunson, Approved August 2020.
m. Updated to allow immediate back filling of shifts for sick employees, added sick time accrual, holiday pay compensation, updated pay compensation for shift work, changed responsibility for taking possession of the weekend and holiday list from the Fire Chief to th Fire Marshal, clarified the method for calling in to acquire

shifts after an Everbridge has been sent. Added allowance to work three consecutive 24-hour shifts as long as there is a 12-hour period where the firefighter is off prior to working an additional shift, added requirement to be in uniform when working at the fire station. Authored by Russel Brunson, Approved February 09, 2021.

n. Added provision for interrupted rest schedule, and clarified that it is expected that personnel are in uniform at 08:00 shift change. Authored by Chief Phillips, approved February 10, 2021.
o. Clarified compensation for those working battalion chief shifts, training compensation, comp time accrual, chief approval for times when two or more members of a shift will be off at the same time, allowable sick time buy back hours, additional credit for those responding and boarding an apparatus, changed approval from the Chief to the Training Officer for review and approval of outside training classes, deleted section allowing training obtained while working at an outside department to be counted towards CCFD training, noted maximum hours as 16 for contract/project fires, clarified time off/leave request process.
p. Updated Comp time accrual 9.10.4.6 and Holiday Pay 9.10.4.10 to incorporate recent changes made by city management. Authored by Russel Brunson, Approved July 19, 2025.

Attachments

Cedar City FD Utah Firefighter Pay Scale.pdf

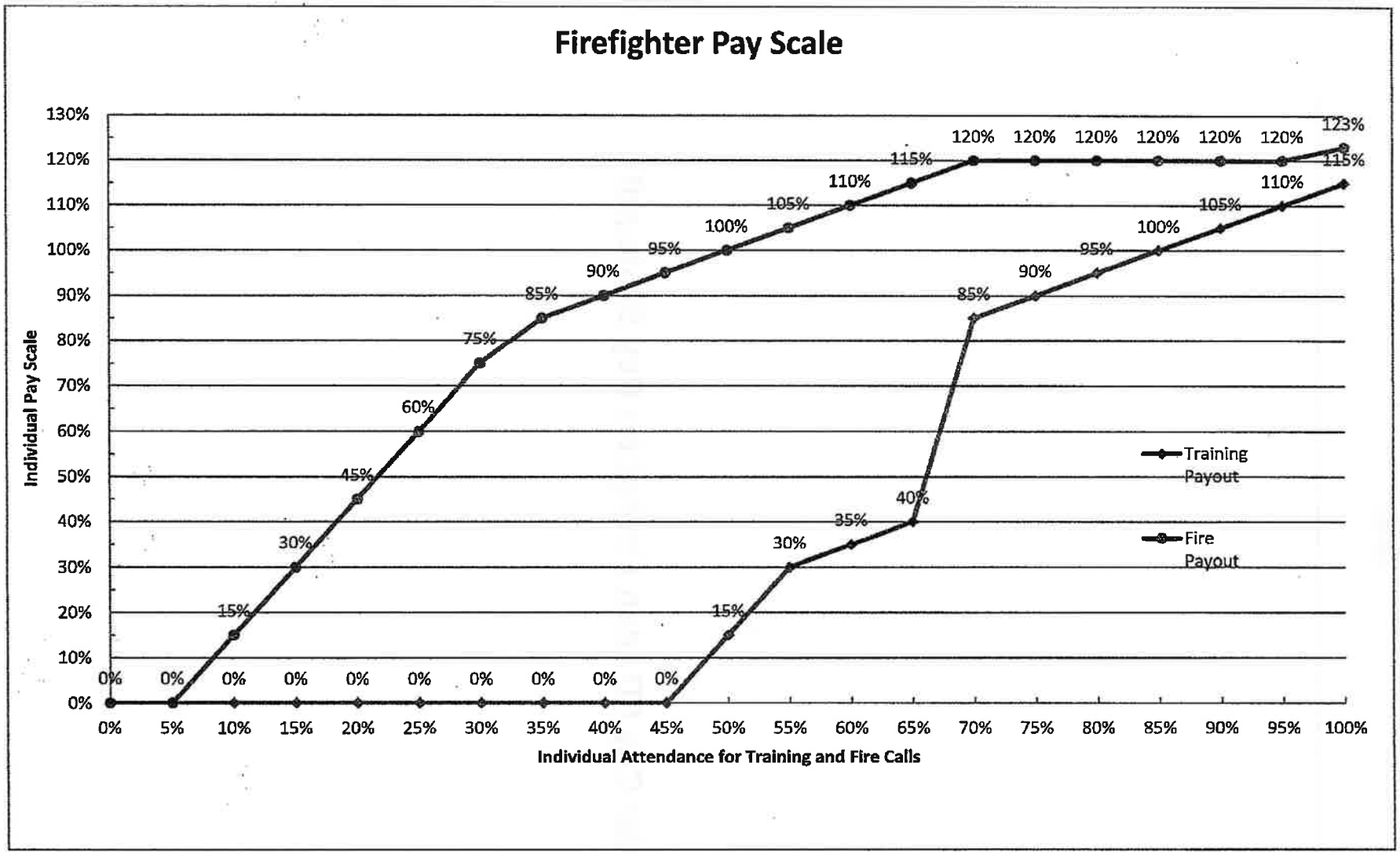
Firefighter Pay Scale
Individual Pay Scale
130%
120%
110%
100%
90%
80%
70%
60%
50%
40%
30%
20%
10%
0%
0% 5% 10% 15% 20% 25% 30% 35% 40% 45% 50% 55% 60% 65% 70% 75% 80% 85% 90% 95% 100%
Individual Attendance for Training and Fire Calls
Training Payout
Fire Payout
0% 0% 0% 0% 0% 0% 0% 0% 0% 0%
15% 30% 45% 60% 75% 85% 90% 95% 100% 105% 110% 115% 120% 120% 120% 120% 120% 120% 123%
15% 30% 35% 40% 85% 90% 95% 100% 105% 110% 115%

CEDAR CITY
CITY COUNCIL AGENDA ITEM 15
STAFF INFORMATION SHEET

To: Mayor and City Council

From: Shane Johnson

Council Meeting Date: May 20, 2026

Subject: **Consider an amendment to City Ordinance 35-10(B) to establish No Parking zones in the vicinity of 200 North and 100 East.**

Discussion: Crosswalk striping and a Rectangular Rapid Flashing Beacon (RRFB) are planned to be installed at the intersection of 200 North and 100 East to help with the pedestrian traffic in the area. To safely accommodate the crosswalks, additional red-curb will need to be painted to meet the minimum sight distance requirements at the crosswalks. Warning triangles will also be painted on 200 North for the east and west bound travel lanes. The lane striping will be installed and/or modified slightly to improve the functionality of the intersection. The existing pedestrian ramps will be reconstructed, and detectable warning surfaces will be installed. The attached drawing shows the locations of the crosswalks and signing/striping modifications. The estimated cost of the new crosswalks and signage at this location is $16,391. It is proposed that this cost be paid for by the Street Division's operating budget from Account #10-79-266.

The following are the proposed red curb locations that need to be added as part of this project. Some of the red curb shown on the attached drawing is already included in the City ordinance. The new "No Parking" zones would be described in the ordinance as follows:

<u>No Parking restrictions being proposed:</u>

31. On the north side of 200 North 60 feet west and 52 feet east of 100 East.

If approved, City Ordinance section 35-10(B) will need to be amended to add these locations to the list of restricted parking areas.

Proper signage will also need to be installed and maintained by the City, if these No Parking restrictions are approved.

The following items are included with this Information Sheet:

1. Exhibit showing the proposed striping changes, red curb locations, new crosswalk striping, signage and modifications to the pedestrian ramps.
2. Proposed amendment to add City Ordinance section 35-10(B)(31).

Requested Action: Please consider whether to approve the "No Parking" restrictions near the intersection of 200 North and 100 East. Thank you for your consideration of this request.

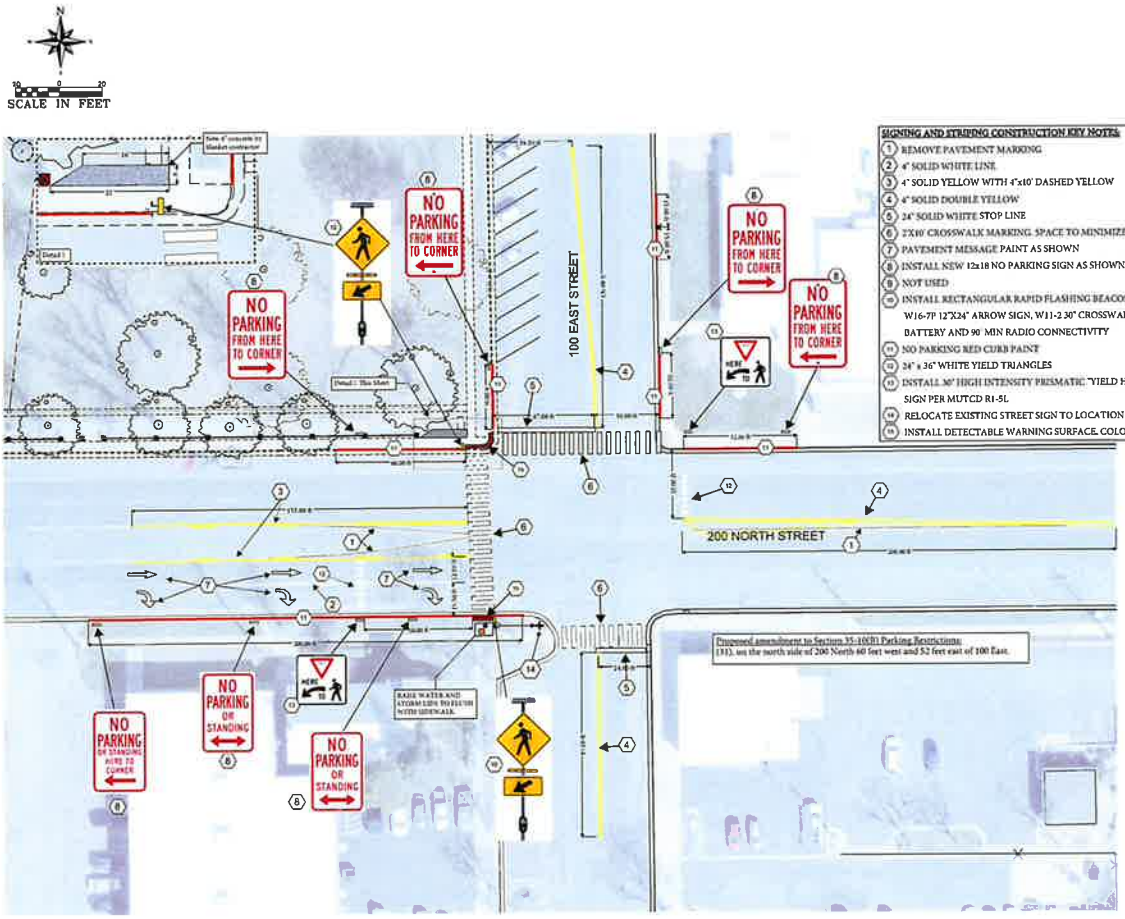

SIGNING AND STRIPING CONSTRUCTION KEY NOTES:

1. REMOVE PAVEMENT MARKING
2. 4" SOLID WHITE LINE
3. 4" SOLID YELLOW WITH 4"x10' DASHED YELLOW
4. 4" SOLID DOUBLE YELLOW
5. 24" SOLID WHITE STOP LINE
6. 2'X40' CROSSWALK MARKING. SPACE TO MINIMIZE LANE USE WEAR
7. PAVEMENT MESSAGE PAINT AS SHOWN
8. INSTALL NEW 12x18 NO PARKING SIGN AS SHOWN
9. NOT USED
10. INSTALL RECTANGULAR RAPID FLASHING BEACON W/PUSH BUTTON. W16-7P 12"X24" ARROW SIGN, W11-2 30" CROSSWALK SIGN, SOLAR PANEL, BATTERY AND 90' MIN RADIO CONNECTIVITY
11. NO PARKING RED CURB PAINT
12. 24" x 36" WHITE YIELD TRIANGLES
13. INSTALL 30" HIGH INTENSITY PRISMATIC "YIELD HERE TO PEDESTRIAN" SIGN PER MUTCD R1-5L
14. RELOCATE EXISTING STREET SIGN TO LOCATION SHOWN
15. INSTALL DETECTABLE WARNING SURFACE. COLOR RED

11X17 SIZE SHEETS ARE NOT TO SCALE

NO	REVISIONS DESCRIPTION	DATE	BY

CEDAR CITY
10 NORTH MAIN STREET
CEDAR CITY, UTAH 84720
PH: (435) 586-2950

DATE: 4/2026
CHECKED: J. A. S.
SCALE: 1" = 20'
DRAWN: T. B. M.

100 EAST & 200 NORTH INTERSECTION PEDESTRIAN CROSSWALK PROJECT 2026

LOCATED IN SW 1/4, OF SECTION 11, T36S, R11W, SLM

SHEET NO. 1

FILE

CEDAR CITY
ORDINANCE 0527-26-

AN ORDINANCE AMENDING 35-10 ESTABLISHING NO PARKING ZONES IN THE VICINITY OF 200 NORTH AND 100 EAST

WHEREAS, Cedar City has adopted Chapter 35, Section 10 of the ordinance of Cedar City, Utah, and said provisions contain specific parking restrictions; and

WHEREAS, due to heavy traffic on both 100 East and 200 North (Freedom Blvd.), vehicles parked along sections of 200 North create an inordinate danger to the motoring and pedestrian public by reducing sight distance; and

WHEREAS, the City Council finds that it is in the best interests of the health, safety, and general welfare of the citizens of Cedar City to prohibit parking in the listed location to prevent parking from interfering with the safety and efficacy of the intersection.

NOW THEREFORE, be it ordained by the City Council of the Cedar City, in the State of Utah, as follows:

SECTION 1: **AMENDMENT** "Section 35-10 Parking Restrictions" of the Cedar City Municipal Code is hereby *amended* as follows:

AMENDMENT

Section 35-10 Parking Restrictions

A. The parking restrictions contained herein shall be marked with upright signs complying with standards set forth in the Uniform Manual on Traffic Control Devices and where appropriate painting the curb in a color as designated in the Uniform Manual on Traffic Control Devices.
B. No parking shall be allowed in the following areas:
    1. from 1000 West to Interstate 15 Freeway on the north side of 200 North in Cedar City, Utah;
    2. sixteen feet south of the 200 North right of way on the West side of 100 West;
    3. along 4050 West extending from the crosswalk in front of Iron Springs Elementary in the following manner: on the east side of the street 85 feet to the south of the crosswalk and 50 feet north of the crosswalk; and on the west side of the street 50 feet south of the crosswalk and 85 feet north of the crosswalk;
    4. on the north side of 1045 North Street extending east 56 feet from the point of curvature of the east curb return on the intersection of Country Side Terrace Drive (250 West);
    5. an approximate 16-foot-long area on the north side of Center Street at

approximately 46 West, the center of which is located 179 feet west of the southeast corner of lot 1, Block 36, Plat B, Cedar City Town Survey;

6. the south side of 200 North from Main Street to 100 East;
7. the south side of College Avenue from 100 West to 300 West;
8. along Royal Hunte Drive:
    a. extending from the crosswalk in front of Cedar Middle School in the following manner: on the North Side of the street 150 feet to the east of the crosswalk and 50 feet west of the crosswalk;
    b. on the south side of the street 50 feet east of the crosswalk and 150 feet west of the crosswalk;
    c. from the east entrance of the Aquatic Center parking lot extending 220 feet to the east; and
    d. on the south side of the street extending from 1850 West to 2200 West.
9. on the south side of Cross Hollow Road extending 150 feet west from the main entrance and exit to Walmart (said entrance/exit is the second entrance/exit on the south side of Cross Hollow Road located west of the Royal Hunte Drive and Cross Hollow Road intersection);
10. beginning at the intersection of Main Street and 1925 North and extending west along the north and south side of 1925 North for 1300 lineal feet;
11. along 1895 West Cross Hollow Drive, beginning at the Walmart Northeast entrance and running west to the CATS bus stop;
12. on the east side of Cove Drive from the centerline of the LDS Temple entrance extending south to the north side of the intersection of Cove Drive and Silver Crest Circle; and on the west side of Cove Drive from the centerline of the LDS Temple entrance extending 250 feet to the north;
13. on the north side of DL Sargent Drive for 35 feet in front of the Public Safety Building;
14. in front of the SUU Sports Performance Building for 250 feet on each side of the street;
15. in front of the South Elementary School for 100 feet on the southside of 400 South starting from the crosswalk going west and 100 feet on the northside of 400 South starting from the crosswalk going east;
16. along the south side of Coal Creek Road starting at 300 West and going 80 feet to the west;
17. on the west side of 450 West starting at 245 South and going to 280 South;
18. on the west side of Cove Drive from the trail crosswalk 30 feet to the north, and on the east side of Cove Drive from the trail crosswalk 30 feet to the south;
19. along the southerly half of Lot 1 on Eagle Ridge Drive in the Canyon at Eagle Ridge Phase 2 subdivision; and
20. on the south side of 800 South from the crosswalk 20 feet to the east and 20 feet to the west, and on the north side of 800 South from the crosswalk 20 feet to the east and 20 feet to the west, and on the north side of 800 South from the

east parking lot entrance 50 feet to the east.

21. Beginning at the intersection of Royal Hunte Drive and Sage Drive and extending east/northeast along the south and east side of Sage Drive to the Pioneer Center PUD entrance and extending east/northeast along the north and west side of Sage Drive to Regency Road.
22. on the south side of Harding Avenue between 100 West and Main Street with a loading zone of 40 feet placed on the north side of Harding Avenue beginning 35 feet east of 100 West extending to 75 feet east of 100 West.
23. on the west side of 500 West beginning 125 feet north of 200 North extending 175 feet north of 200 North.
24. on the west side of 400 East beginning at the south edge of the driveway entrance into East Gate PUD Unit 2 and extending 50 feet south of the driveway entrance.
25. on the east side of Airport Road beginning at the intersection of Kitty Hawk Drive and extending 380 feet south of the intersection.
26. on the north side of Kitty Hawk Drive beginning at the intersection of Airport Road and extending 224 feet east of the intersection.
27. on the north and south sides of Canyon Ranch Drive beginning at the intersection of Main Street and extending east until Canyon Ranch Drive intersects with Auto Mall Drive and Wedgewood Lane, and extending west to the west side of 2610 North Canyon Ranch Drive.
28. on the north and south sides of the reduced width roadway between the cul-de-sacs on 2125 South Circle and Moon Crest Drive.
29. in the vicinity of the intersection of 600 South and 860 West:
    a. on the south side of 600 South Street 250 feet west and 60 feet east of 860 West;
    b. on the north side of 600 South Street 120 feet west and 200 feet east of 860 West;
    c. on the north side of 600 South Street 100 feet east of 780 West;
    d. on the west side of 860 West Street 80 feet starting 144 feet south of the center of 600 South; and
    e. on the east side of 860 West Street 62 feet south and 100 feet north of the Cedar High School bus entrance.
30. in the vicinity of the intersections of 1045 North with 400 West and Northfield Road:
    a. on the west side of Northfield Road 160 feet north of 1045 North;
    b. on the north side of 1045 North 65 feet west and 113 feet east of Northfield Road; and
    c. on the south side of 1045 North 110 feet west and 330 feet east of 400 West.
31. on the north side of 200 North 60 feet west and 52 feet east of 100 East.

C. The following areas shall have the following restrictions on parking, stopping, and standing:

1. on the east side of the street in front of the County office building located at 82

North and 100 East fifteen (15) minute parking only;

2. student pick up and drop off only between 8:30 a.m. and 4 p.m. along 400 South adjacent to South Elementary;
3. from 1 p.m. to 4 p.m. Monday through Friday on the north side of 200 North extending from 600 West to 500 West; and the east side of 600 West extending 185 feet north from the intersection of 200 North and 600 West;
4. student pick up and drop off only between 8:00 a.m. and 4 p.m. along the northside of 70 South (College Avenue) for 400 feet, with approximately 200 feet going west of 300 East and 200 feet going east of 300 East;
5. school bus loading and drop-off zone only between 8:00 a.m. and 4:00 p.m. Monday through Friday on the east side of 4100 West for a distance of 472 feet along the frontage of Iron Springs Elementary School; and
6. no parking from 8 p.m. to 6 a.m. on 900 North beginning 850 feet west of Main Street to 300 West.

AMENDED BY CEDAR CITY ORDINANCE NO. 0112-11, 0209-11,1023-13, 1211-13, 0611-14, 0813-14-1, 0708-15, 0921-16-1, 0208-17-1, 0913-17, 0927-17-1, 0124-18-1, 0725-18-2, 0626-19-1, 0129-20, 0708-20-8, 1028-20-1, 0324-21-1, 0713-22-9, 0914-22, and 1214-22.

PASSED AND ADOPTED BY THE CEDAR CITY CITY COUNCIL

_____.

	AYE	NAY	ABSENT	ABSTAIN
Phillips	_____	_____	_____	_____
Cox	_____	_____	_____	_____
Wilkey	_____	_____	_____	_____
Schmidt	_____	_____	_____	_____
Galan	_____	_____	_____	_____

Presiding Officer

_____

STEVE NELSON, MAYOR, Cedar City

Attest

_____

RENON SAVAGE, RECORDER, Cedar City