ALPINE CITY PLANNING COMMISSION MEETING

NOTICE is hereby given that the **PLANNING COMMISSION** of Alpine City, Utah, will hold a **Public Meeting** on **Tuesday, May 5th, 2026 at 6:00 p.m. at City Hall, 20 North Main Street, Alpine, Utah.**

The public may attend the meeting in person or view it via the Alpine City YouTube Channel. A direct link to the channel can be found on the homepage of the Alpine City website, **alpineut.gov.**

I. GENERAL BUSINESS

A. Welcome and Roll Call: Alan MacDonald
B. Prayer/Opening Comments: By Invitation
C. Pledge of Allegiance: Troy Slade

II. REPORTS AND PRESENTATIONS

None

III. ACTION/DISCUSSION ITEMS:

A. **Action Item:** Review of Alpine Fire Station Addition/Remodel

IV. COMMUNICATIONS

V. APPROVAL OF PLANNING COMMISSION MINUTES: March 31, 2026

ADJOURN

Chair Alan MacDonald
May 1, 2026

THE PUBLIC IS INVITED TO ATTEND ALL PLANNING COMMISSION MEETINGS. If you need a special accommodation to participate in the meeting, please call the City Recorder's Office at 801-756-6347 ext. 5.

CERTIFICATION OF POSTING. The undersigned duly appointed recorder does hereby certify that the above agenda notice was posted at Alpine City Hall, 20 North Main, Alpine, UT. It was also sent by e-mail to The Daily Herald located in Provo, UT a local newspaper circulated in Alpine, UT. This agenda is also available on the City's web site at www.alpinecity.org and on the Utah Public Meeting Notices website at www.utah.gov/pmn/index.html.

PUBLIC MEETING AND PUBLIC HEARING ETIQUETTE

Please remember all public meetings and public hearings are now recorded.

- All comments **must** be recognized by the Chairperson and addressed through the microphone.
- When speaking to the Planning Commission, please stand, speak slowly and clearly into the microphone, and state your name and address for the recorded record.
- Be respectful to others and refrain from disruptions during the meeting. Please refrain from conversations with others in the audience as the microphones are very sensitive and can pick up whispers in the back of the room.
- Keep comments constructive and not disruptive.
- Avoid verbal approval or dissatisfaction with the ongoing discussion (i.e., booing or applauding).
- Exhibits (photos, petitions, etc.) given to the City become the property of the City.
- Please silence all cellular phones, beepers, pagers, or other noise-making devices.
- Be considerate of others who wish to speak by limiting your comments to a reasonable length and avoiding repetition of what has already been said. Individuals may be limited to two minutes and group representatives may be limited to five minutes.
- Refrain from congregating near the doors or in the lobby area outside the council room to talk as it can be very noisy and disruptive. If you must carry on a conversation in this area, please be as quiet as possible. (The doors must remain open during a public meeting/hearing.)

Public Hearing vs. Public Meeting

If the meeting is a **public hearing**, the public may participate during that time and may present opinions and evidence for the issue for which the hearing is being held. In a public hearing, there may be some restrictions on participation such as time limits.

Anyone can observe a **public meeting**, but there is no right to speak or be heard there - the public participates in presenting opinions and evidence at the pleasure of the body conducting the meeting.

ALPINE CITY PLANNING COMMISSION AGENDA

SUBJECT: Review and Approval of the Alpine Fire Station Addition/Remodel

FOR CONSIDERATION ON: May 5, 2026

PETITIONER: Babcock Design, Alpine City

ACTION REQUESTED BY PETITIONER: Recommend approval to Alpine Fire Station Addition/Remodel

REVIEW TYPE: Legislative

BACKGROUND INFORMATION:

The Alpine Fire Station sits at 50 E 100 N in the same city block as Alpine's City Hall and City Park. The Station is in need of updating to meet current needs. The design proposed modernizes and expands operational capacity and also converts the existing structure into a functioning Community Center that supports civic gatherings, events, and public activities.

Key architectural elements include:

- **Fire Station Addition:** A new addition will be constructed to meet current operational demands and improve circulation and function for fire personnel.
- **Community Center Conversion:** The existing station building will be fully remodeled and repurposed as a Community Center, reinforcing its role within the civic core of Alpine.
- **Preservation of Existing Apparatus Bay:** The existing apparatus bay will remain as part of the final building configuration.

These improvements create an integrated municipal campus that enhances public service delivery and supports community engagement.

Sensitivity to Historic Downtown Character

A central consideration in the design is the project's proximity to Alpine's historic downtown area. The design team has intentionally approached the remodel and addition with sensitivity toward the existing architectural rhythm, massing, and material character of the surrounding civic buildings.

The project addresses historic context in the following ways:

- **Blending Existing and New Architectural Forms:** The addition mirrors the proportions and simple rooflines found in the existing station and adjacent civic structures, ensuring that new elements feel compatible with established forms.
- **Material Cohesion and Respect for Context:** The project retains stucco as the primary exterior material—reflecting the current building and many structures within the downtown area while introducing brick and wood-like accents to elevate the architecture without detracting from its historic surroundings.
- **Unified Civic Presence:** By updating the existing structure and integrating both the remodeled areas and the new addition, the overall project maintains a cohesive civic identity that aligns with Alpine's tradition of modest, durable, and visually harmonious public architecture.

This approach allows the Fire Station and Community Center to feel updated and functional while still honoring the heritage and scale of the historic town center.

Use of Materials

The exterior material palette reinforces this commitment to contextual sensitivity and architectural cohesion:

- **Stucco (Primary Material):** The main building will continue to use stucco as its dominant exterior material. Existing stucco surfaces will be refinished to a like-new condition, while the new addition will receive a matching stucco treatment for seamless continuity.
- **Faux Wood Panel Accents:** Strategically placed faux wood paneling introduces warmth and natural texture, enhancing visual appeal while complementing the traditional materials found near downtown.
- **Brick Veneer Wainscot:** A brick veneer wainscot grounds the building architecturally and visually links the structure to other nearby civic and historic buildings that utilize masonry accents.

Finish Grade Line

The finish grade for the project site will remain largely unchanged. Modifications will be minimal and limited primarily to areas supporting the reconfigured vehicle circulation patterns.

The primary grading adjustment accommodates the revised access route for returning apparatus, which will now enter the site from the east, as shown in the site plans. This ensures safer maneuvering and operational efficiency without altering the overall site character.

Landscaping

Landscaping design for the project will be completed through a separate City-led effort. Alpine City plans to engage a landscape designer to create a comprehensive site design, including the development of a sculpture garden between the new Community Center and City Hall.

Through this coordinated landscape effort, planting selections, pedestrian pathways, and amenity areas associated with the Fire Station and Community Center will be integrated into a unified civic landscape. The project team will collaborate with the City to ensure that the fire station's landscaping complements the historic downtown setting and supports the overall campus vision.

Conclusion

The proposed Alpine Fire Station #202 improvements balance modern functionality with thoughtful respect for Alpine's historic civic core. The remodel, addition, and landscape coordination create a cohesive municipal campus that enhances public safety operations and community life. Material selection, architectural form, and site considerations all work toward a design that is contextually sensitive, visually harmonious, and aligned with the City's long-term civic goals.

The applicant has provided a site plan that meets the code requirements for 3.06 Business Commercial Zone and 3.11 Gateway/Historic Zone. 4.07, 4.08, and 4.10 of the Development Code should also be complete. If there is anything not complete it can be done before the building permit is approved. A few of the items that need addressing are:

- Curve needs 8ft radius for parking lot. Currently it is less than that.
- Decision of Landscape Plan

Staff recommends that the Planning Commission consider sending a positive recommendation to the City Council regarding the construction of the Alpine Fire Station Addition/Remodel, subject to the condition of a Landscape Plan being provided before landscaping is installed.

GENERAL PLAN REFERENCE:

- N/A

CITY CODE REFERENCE:

- Alpine Development Code 3.07
- Alpine Development Code 3.11
- Alpine Development Code 4.07
- Alpine Development Code 4.08
- Alpine Development Code 4.10

PUBLIC NOTICE:

This item does not require a public hearing but will be posted as an agenda item on the Planning Commission and City Council agendas, where applicable.

STAFF RECOMMENDATION:

Staff recommends that the Planning Commission consider sending a positive recommendation to the City Council regarding the construction of the Alpine Fire Station Addition/Remodel, subject to the condition of a Landscape Plan being provided before landscaping is installed.

Motion to Approve:

I move to recommend approval of the proposed site plan for the construction of the Alpine Fire Station Addition/Remodel, as per the submitted site plan.

Motion to Approve with Conditions:

I move to recommend approval of the proposed site plan for the construction of the Alpine Fire Station Addition/Remodel, subject to the condition of a Landscape Plan being provided before landscaping is installed.

Motion to Table:

I move to table consideration of the approval of the proposed site plan for the construction of the Alpine Fire Station Addition/Remodel, as per the submitted site plan, to a future meeting in order to allow additional time for revisions and/or additional information, including:
*Insert additional information needed.

Motion to Deny:

I move to recommend denial of the proposed site plan for the construction of the Alpine Fire Station Addition/Remodel based on the following findings:
*Insert findings

CITY OF ALPINE

ALPINE FIRE STATION #202

50 E 100 N ALPINE, UT 84004

CONSTRUCTION DOCUMENTS

04.16.2026

NORTH VIEW
***FOR REFERENCE ONLY**

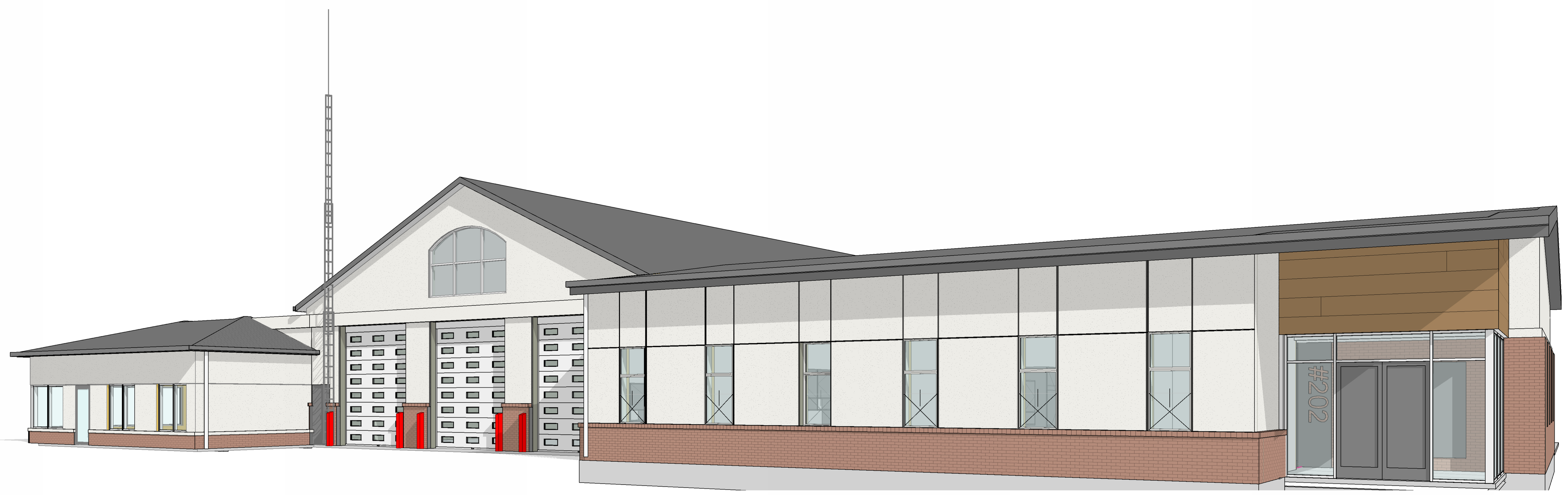

SOUTH VIEW
***FOR REFERENCE ONLY**

PROJECT TEAM

OWNER
CITY OF ALPINE
20 NORTH MAIN
ALPINE, UT 84004
T: 801-756-6347

CONTACT: SHANE SORENSEN
ssorensen@alpineut.gov

ARCHITECT
BABCOCK DESIGN
52 EXCHANGE PLACE
SALT LAKE CITY, UT 84111
801.531.1144

CONTACT: CHAD LITTLEWOOD
chad@babcockdesign.com

STRUCTURAL ENGINEER
DUNN ASSOCIATES, INC
380 WEST 800 SOUTH SUITE 100
SALT LAKE CITY, UTAH 84101
T: 801.575.8877

CONTACT: GREG DUNN
gdunn@dunn-se.com

MECHANICAL ENGINEER
COLVIN ENGINEERING ASSOCIATES
505 E SOUTH TEMPLE, SUITE 100
SALT LAKE CITY, UTAH 84102
T: 801.322.2400

CONTACT: ROB VAN
rvan@cea-ut.com

ELECTRICAL ENGINEER
ENVISION ENGINEERING
240 EAST MORRIS AVENUE, STE. 200
SALT LAKE CITY, UT 84115
T: 801.534.1130

CONTACT: ERIC FOGG
efogg@envisioneng.com

CIVIL ENGINEER
ENSIGN ENGINEERING
45 WEST SEGO LILY DR., SUITE 500
SANDY, UT 84070
T: (801) 255-0529

CONTACT: MICHAEL BUDGE
mbudge@ensignutah.com

VICINITY MAP

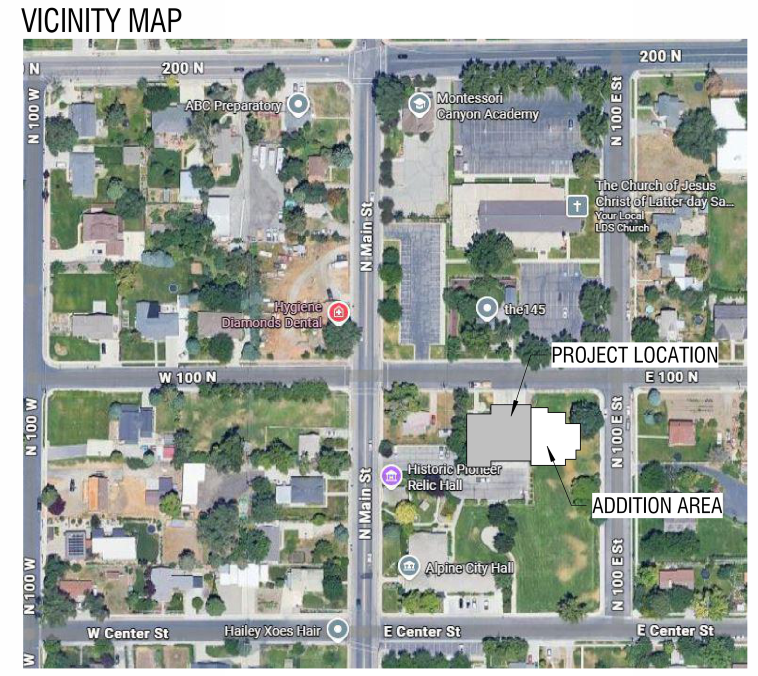

PHASE SIGN-OFF

PROJECT PHASE: ☐ PRE - D ☐ SD ☒ DD ☐ CD

☐ APPROVED ☐ APPROVED WITH COMMENTS ☐ REVISE & RESUBMIT: SEE COMMENTS

CITY OF ALPINE	SHANE SORENSEN	CITY ADMINISTRATOR/PUBLIC WORKS DIRECTOR	SIGNATURE	DATE
CITY OF ALPINE	CARLA MERRILL	ALPINE CITY MAYOR	SIGNATURE	DATE
LONE PEAK FIRE	BRIAN PATTEN	LONE PEAK FIRE CHIEF	SIGNATURE	DATE
LONE PEAK FIRE	JAKE BECK	LONE PEAK DEPUTY FIRE CHIEF	SIGNATURE	DATE
LONE PEAK FIRE	BRIAN HODSON	LONE PEAK FIRE CAPTAIN	SIGNATURE	DATE

Signatures indicate these drawings have been reviewed by the parties listed above. Approval constitutes permission for the Design Team to proceed with the next design phase. Concerns or comments regarding the design are to be made on this set as a record. Any alteration or modification to these documents by the Owner/Tenant after the signature date is considered a change in scope. Change in scope requires additional review and approval by all parties listed above. For liability purposes, these documents may be altered by the Design Team without owner consent to conform to building codes and/or to comply with any other governing standard deemed necessary by the Design Team.

Current as of: 4/16/2026 9:43:46 PM

Original drawing is 30" x 42" Autodesk Docs://25116 - ALPINE FIRE STATION 202/25116 - Alpine Fire Station 202.rvt

PROJECT INFORMATION

CODE SUMMARY AND PROJECT INFORMATION:

APPLICABLE CODES AND STANDARDS

2021	INTERNATIONAL BUILDING CODE (IBC)
2021	INTERNATIONAL PLUMBING CODE (IPC)
2021	INTERNATIONAL MECHANICAL CODE (IMC)
2023	NATIONAL ELECTRICAL CODE (NEC)
2021	INTERNATIONAL ENERGY CONSERVATION CODE (IECC)
2021	INTERNATIONAL FIRE CODE (IFC)
2017	ANSI A117.1

PROJECT DESCRIPTION

DESCRIPTION

PROJECT AREA:
LEVEL 1 13,154 SF
TOTAL 13,154 SF

USE AND OCCUPANCY CLASSIFICATION (IBC CHAPTER 3)

GROUP(S): R-2, A-3, S-2

SPECIAL DETAILED REQUIREMENTS BASED ON USE AND OCCUPANCY (IBC CHAPTER 4)

PER IBC 420.2 WALLS SEPARATING SLEEPING UNITS FROM OTHER OCCUPANCIES CONTINGUOUS TO THEM IN THE SAME BUILDING SHALL BE CONSTRUCTED AS FIRE PARTITIONS IN ACCORADANCE WITH IBC 708. THESE LOCATIONS ARE NOTED ON SHEET G102.

GENERAL BUILDING HEIGHTS AND AREAS (IBC CHAPTER 5)

CONSTRUCTION TYPE: V-B

BUILDING HEIGHT BASED ON MOST RESTRICTIVE OCCUPANCY (A-3)

	ALLOWABLE	ACTUAL
BUILDING HEIGHT IN FEET (Table 504.3):	40	29
BUILDING HEIGHT IN STORIES (Table 504.4):	1	1
AREA PER FLOOR (Table 506.2):	24,000	13,154

ALLOWABLE AREA DETERMINATION (506.2):

R-2 OCCUPANCY:
$A_a = A_t + (NS \times I_f)$
= 28000 + (7000 × 0.75)
= 33,250 TOTAL SF
NS = TABULAR ALLOWABLE AREA FACTOR FROM TABLE 506.3.3 OR 506.3.3.1
= 7,000

A-3 OCCUPANCY:
$A_a = A_t + (NS \times I_f)$
= 6,000 + (6,000 x 0.75)
= 10,500 TOTAL SF
NS = TABULAR ALLOWABLE AREA FACTOR FROM TABLE 506.3.3 OR 506.3.3.1
= 6,000

S-2 OCCUPANCY:
$A_a = A_t + (NS \times I_f)$
= 13500 + (13500 × 0.75)
= 23,625 TOTAL SF
NS = TABULAR ALLOWABLE AREA FACTOR FROM TABLE 506.3.3 OR 506.3.3.1
= 13,500

PER IBC 508.4.2 ALLOWABLE BUILDING AREA: SUM OF RATIO FOR ACTUAL BUILDING AREA/ALLOWABLE BUILDING AREA FOR EACH OCCUPANCY DOES NOT EXCEED 1.

	R-2	A-3	S-2	
ACTUAL AREAS:	5,102 SF	2,963 SF	5,089 SF	
SUM OF RATIOS:	0.15	0.28	0.22	= 0.65

FRONTAGE INCREASE (506.3):
PUBLIC WAY OR 20' MIN. OPEN SPACE
I_f = 0.75

MIXED OCCUPANCIES: SEPARATED

FIRE RESISTIVE RATING REQUIREMENTS FOR BUILDING ELEMENTS (IBC CHAPTER 6)

CONSTRUCTION TYPE: V-B

STRUCTURAL FRAME:	0	HR
BEARING WALLS EXTERIOR:	0	HR
BEARING WALLS INTERIOR:	0	HR
NONBEARING WALLS INTERIOR:	0	HR
FLOOR CONSTRUCTION:	0	HR
ROOF CONSTRUCTION:	0	HR

FIRE-RESISTANCE RATING FOR EXTERIOR WALLS BASED ON FIRE SEPARATION DISTANCE: 0 HR

FIRE AND SMOKE PROTECTION FEATURES (IBC CHAPTER 7)

ALLOWABLE AREA OF OPENINGS:
FIRE SEPARATION DISTANCE: 30 FEET OR GREATER
OPENING PROTECTION: UNPROTECTED, NONSPRINKLERED
ALLOWABLE AREA: NO LIMIT

FIRE WALL RATING: GROUP: A-3 RATING: 2
FIRE BARRIER RATING: GROUP: A-3 RATING: 2
OPENING FIRE PROTECTION:

TYPE OF ASSEMBLY	WALL RATING	DOOR RATING	DR. VISION PANEL SIZE	SIDELITE/ TRANSOM
FIRE WALL	2	1.5	100 SQ. IN.	N.P.

INTERIOR FINISHES (IBC CHAPTER 8)

INTERIOR WALL AND CEILING FINISHES: PER TABLE 803.11

OCCUPANCY	INTERIOR EXIT STAIRWAYS, ETC.	CORRIDORS, ETC.	ROOMS AND ENCLOSED SPACES
GROUP R-2	CLASS C	CLASS C	CLASS C
GROUP A-3	CLASS A	CLASS A	CLASS C

FIRE PROTECTION SYSTEMS (IBC CHAPTER 9)

AUTOMATIC SPRINKLER SYSTEM: NFPA 13

AUTOMATIC SPRINKLER SYSTEM INSTALLED IN R-2 OCCUPANCY ONLY. APPARATUS BAY AND A-3 OCCUPANCY ARE EXISTING BUILDINGS WITH NO AUTOMATIC SPRINKLER SYSTEM

MEANS OF EGRESS (IBC CHAPTER 10)

OCCUPANT LOAD (1004): 245 TOTAL OCCUPANTS (SEE OCCUPANT LOAD CALCULATIONS ON SHEET G101

EGRESS SIZING (1005):
OTHER EGRESS COMPONENTS = OCCUP. LOAD × 0.15 " / OCC.
= 36.75 INCHES REQUIRED
= 340 INCHES PROVIDED

ASSEMBLY (NONSPRINKLERED)
COMMON PATH OF EGRESS TRAVEL: 75 FEET
EXIT ACCESS TRAVEL DISTANCE: 200 FEET
RESIDENTIAL (SPRINKLERED)
COMMON PATH OF EGRESS TRAVEL: 125 FEET
EXIT ACCESS TRAVEL DISTANCE: 250 FEET

PLUMBING FIXTURE REQUIREMENTS (IBC CHAPTER 29)

SEE PLUMBING FIXTURE CALCULATIONS ON SHEET: G101

THERMAL ENVELOPE (IECC)

ROOF INSULATION R-VALUE: R-30
STUD CAVITY INSULATION R-VALUE: R-19
CONTINUOUS INSULATION R -VALUE: R-10
SLAB/FOUNDATION R-VALUE: R-10

EXTERIOR GLAZING INFORMATION:
BASIS OF DESIGN PRODUCT: PPG SOLARBAN 70
VLT 45% MINIMUM
SUMMER U-FACTOR: 0.26 Btu/(hr x sqft) MAXIMUM
WINTER U-FACTOR: 0.26 Btu/(hr x sqft) MAXIMUM
SHGC 0.24 MAXIMUM

EXTERIOR GLAZING SYSTEM INFORMATION:
BASIS OF DESIGN PRODUCT: KAWNEER 451UT (THERMAL)
BASIS OF DESIGN PRODUCT: KAWNEER 1600T, SYSTEM 2
U-FACTOR: 0.26 Btu/(hr x sqft) MAXIMUM
SHGC 0.26 MAXIMUM

OTHER

DESCRIPTION

DEFERRED SUBMITTALS

- FIRE SUPRESSION SYSTEM
- FIRE ALARM SYSTEM
- SEISMIC RESTRAINTS (WHERE REQUIRED EXCEPT AS NOTED ON SHEET A501)
- FIRE SAFETY AND EVACUATION PLANS
- OTHER

NOTES:
ALL DEFERRED SUBMITTALS TO BE PROVIDED TO THE AUTHORITY HAVING JURISDICTION FOR REVIEW A MINIMUM OF TWO WEEKS PRIOR TO COMMENCMENT OF WORK.

ALL DEFERRED SUBMITTALS TO BE REVIEWED BY THE ARCHITECT PRIOR TO SUBMITTAL TO THE AUTHORIY HAVING JURISDICTION.

DRAWING INDEX

GENERAL

G001 PROJECT INFORMATION SHEET
G002 GENERAL NOTES, LEGENDS, ABBREVIATIONS, AND SYMBOLS
G101 CODE - EGRESS LIFE SAFETY
G102 CODE - FIRE RATED STRUCTURE
G201 GENERAL ACCESSIBILITY REQUIREMENTS
G202 GENERAL ACCESSIBILITY REQUIREMENTS
G203 TYPICAL MOUNTING HEIGHTS
G301 ENERGY COMPLIANCE REPORTS

CIVIL

C-001 GENERAL NOTES
C-100 DEMOLITION PLAN
C-200 SITE PLAN
C-300 GRADING AND DRAINAGE PLAN
C-400 UTILITY PLAN
C-500 EROSION CONTROL PLAN
C-600 DETAILS
C-601 DETAILS

DEMO

AD101 DEMO FLOOR PLANS
AD301 DEMO EXTERIOR ELEVATIONS

ARCHITECTURAL SITE

AS101 SITE PLAN
AS501 SITE DETAILS

ARCHITECTURAL

A111 LEVEL 1 SLAB PLAN
A112 LEVEL 1 FLOOR PLAN
A113 LEVEL 1 REFLECTED CEILING PLAN
A114 LEVEL 1 FINISHES PLAN
A115 LEVEL 1 FURNITURE / EQUIPMENT PLAN
A131 ROOF PLAN
A201 EXTERIOR ELEVATIONS
A301 BUILDING SECTIONS
A311 WALL SECTIONS
A312 WALL SECTIONS
A401 ENLARGED FLOOR PLANS AND ELEVATIONS
A402 ENLARGED FLOOR PLANS AND ELEVATIONS
A403 ENLARGED FLOOR PLANS AND ELEVATIONS
A404 ENLARGED FLOOR PLANS AND ELEVATIONS
A501 EXTERIOR DETAILS
A502 EXTERIOR DETAILS
A541 INTERIOR DETAILS
A542 INTERIOR DETAILS
A543 INTERIOR DETAILS
A561 OPENING DETAILS
A601 UL RATINGS AND DIAGRAMS
A611 STANDARD PARTITION TYPES
A612 PARTITION HEAD, STANDARD PARTITIONS AND FRAMING DETAILS
A621 DOOR, FRAME & WINDOW SCHEDULE
A641 CASEWORK TYPES
A642 INTERIOR CASEWORK TYPICALS
A651 MATERIAL AND FINISH SCHEDULES
A661 INTERIOR SIGNAGE PLAN SCHEDULES
A662 INTERIOR SIGNAGE PLAN SCHEDULES

STRUCTURAL

S-001 GENERAL STRUCTURAL NOTES
S-002 GENERAL STRUCTURAL NOTES
S-003 GENERAL STRUCTURAL NOTES
S-101 FOOTING AND FOUNDATION PLAN
S-102 ROOF FRAMING PLAN
S-201 MASONRY SHEAR WALL ELEVATIONS
S-202 WOOD EXTERIOR WALL ELEVATIONS
S-301 BUILDING SECTIONS
S-501 FOOTING AND FOUNDATION DETAILS
S-502 FOOTING AND FOUNDATION DETAILS
S-503 FOOTING AND FOUNDATION DETAILS
S-701 ROOF FRAMING DETAILS
S-702 ROOF FRAMING DETAILS
S-703 ROOF FRAMING DETAILS
S-801 CONCRETE SCHEDULES
S-802 MASONRY SCHEDULES
S-803 WOOD SCHEDULES
S-804 STEEL SCHEDULES

FIRE

FP001 FIRE LEGEND, SYMBOLS & ABBREVIATIONS
FP112 LEVEL 1 FIRE PROTECTION PLAN

MECHANICAL / PLUMBING

M001 MECHANICAL LEGEND, SYMBOLS & ABBREVIATIONS
MD112 LEVEL 1 MECHANICAL DEMO PLAN
MD131 ROOF MECHANICAL DEMO PLAN
MH112 LEVEL 1 MECHANICAL PLAN
MH131 ROOF MECHANICAL PLAN
MH401 ENLARGED MECHANICAL PLANS
MH402 ENLARGED MECHANICAL PLANS
MH501 MECHANICAL DETAILS
MH601 MECHANICAL SCHEDULES
MI112 LEVEL 1 TEMPERATURE CONTROL ZONE
MH801 MECHANICAL 3D VIEWS
MP112 LEVEL 1 REFRIGERANT PIPING PLAN

PL001 PLUMBING LEGEND, SYMBOLS & ABBREVIATIONS
PD112 LEVEL 1 PLUMBING DEMO PLAN
PL112 LEVEL 1 PLUMBING PLAN
PL131 ROOF PLUMBING PLAN
PL401 ENLARGED PLUMBING PLANS
PL402 ENLARGED PLUMBING PLANS
PL501 PLUMBING DETAILS
PL601 PLUMBING SCHEDULES
PL801 PLUMBING ISOMETRICS

ELECTRICAL

EG001 GENERAL NOTES AND SYMBOLS LISTS
EG501 ELECTRICAL DETAILS
EG502 ELECTRICAL DETAILS
EG503 ELECTRICAL DETAILS
EG504 ELECTRICAL DETAILS
EG505 LIGHTNING PROTECTION DETAILS
EG506 ACCESS CONTROL DOOR ROUGH-IN DETAILS

ES101 SITE PLAN - ELECTRICAL
ES102 SITE PLANS - PHOTOMETRY

EE101 DEMOLITION AND LIGHTING
EE201 POWER AND SYSTEMS
EE301 OVERALL ROOF PLAN
EE701 POWER ONE-LINE DIAGRAM
EE702 LIGHTING DETAILS AND DIAGRAMS
EE801 LIGHTING FIXTURE SCHEDULE & CONTROLS
EE803 ELECTRICAL SCHEDULES

EY701 FIRE ALARM RISER DIAGRAM
EY702 SYSTEMS RISER DIAGRAMS

EA101 AUDIO VISUAL
EA401 AUDIO VISUAL ELEVATIONS
EA601 AUDIO VISUAL RISERS & EQUIP LISTS

Babcock Design

Salt Lake City
52 Exchange Place
Salt Lake City, UT 84111
801.531.1144

Boise
800 W Main Street, Suite 940
Boise, ID 83702
208.424.7675

babcockdesign.com

Consultant

CITY OF ALPINE

ALPINE FIRE STATION #202

50 E 100 N ALPINE, UT 84004

Revisions

Num.	Description	Date

Project Number	25116
Original Issue	04.16.2026
Project Status	CONSTRUCTION DOCUMENTS

The information and content represented herein is considered by law the architect's instruments of service and are the property of Babcock Design. They are available for limited review and evaluation by clients, consultants, contractors, government agencies, vendors, and office personnel only in accordance with this notice. They are intended for use only for the project specified and are to be used for no other purpose or project including additions to or modification of the completed project. No part thereof may be copied, reproduced, photographed, modified, published, uploaded, transmitted, disclosed, sold, distributed to others in any way including in digital form, or otherwise used without the prior written consent of Babcock Design.

COPYRIGHT © 2025 BABCOCK DESIGN

Stamp

STATE OF UTAH
ROBERT B. COTTLE
136818
LICENSED ARCHITECT

Sheet Title

PROJECT INFORMATION SHEET

Sheet Number

G001

ABBREVIATIONS

A/C	AIR CONDITIONING
ACST	ACOUSTICAL
ADDM	ADDENDUM
ADJ	ADJUSTABLE
ALLOW	ALLOWABLE
ALUM	ALUMINUM
APPROX	APPROXIMATE
BFBI	BABCOCK FURNISHED BABCOCK INSTALLED
BFCI	BABCOCK FURNISHED CONTRACTOR INSTALLED
BLDG	BUILDING
BLK	BLOCK
BRK	BRICK
BU	BUILT-UP
BW	BOTH WAYS
CFCI	CONTRACTOR FURNISHED CONTRACTOR INSTALLED
CI	CAST IRON
CJ	CONTROL JOINT
CLG	CEILING
CMU	CONCRETE MASONRY UNIT
COL	COLUMN
COMP	COMPACTED / COMPOSITE
CONC	CONCRETE
CONST	CONSTRUCTION
CONT	CONTINUOUS
CONTR	CONTRACTOR
DF	DRINKING FOUNTAIN
DIA	DIAMETER
DIM	DIMENSION
DN	DOWN
DTL	DETAIL
DWG	DRAWING
EA	EACH
EXF	EXHAUST FAN
EIFS	EXTERIOR INSULATION FINISH SYSTEM
EJ	EXPANSION JOINT
ELECT	ELECTRIC / ELECTRICAL
ELEV	ELEVATION
EQ	EQUAL
EXIST	EXISTING
EXT	EXTERIOR
FD	FLOOR DRAIN
FDN	FOUNDATION
FIN	FINISH
FLR	FLOOR
FR	FIRE RATED
FTG	FOOTING
G	GAS
GA	GAUGE
GALV	GALVANIZED
GI	GALVANIZED IRON
GRD	GRADE
GLB	GLUE-LAM BEAM
GYP	GYPSUM BOARD
HB	HOSE BIB
HDR	HEADER
HM	HOLLOW METAL
HORZ	HORIZONTAL
ID	INSIDE DIAMETER
INSUL	INSULATION
INT	INTERIOR
IRRG	IRRIGATION
JB	JAMB
JNT	JOINT
MAX	MAXIMUM
MECH	MECHANICAL
MFR	MANUFACTURER
MIN	MINIMUM
MR	MOISTURE RESISTANT
NIC	NOT IN CONTRACT
NTS	NOT TO SCALE
NO	NUMBER
OC	ON CENTER
OD	OUTSIDE DIAMETER
OFD	OVERFLOW DRAIN
OFCI	OWNER FURNISHED CONTRACTOR INSTALLED
OFOI	OWNER FURNISHED OWNER INSTALLED
OPNG	OPENING
PLYWD	PLYWOOD
PNT	PAINT
PNTD	PAINTED
PR	PAIR
R&S	ROD AND SHELF
RAD	RADIUS
RD	ROOF DRAIN
REG	REGULAR
REINF	REINFORCED / REINFORCING
REQ'D	REQUIRED
REV	REVISED
RM	ROOM
RO	ROUGH OPENING
RS	ROUGH-SAWN
SC	SOLID CORE
SCHED	SCHEDULE
SHT	SHEET
SIM	SIMILAR
SPEC	SPECIFICATION
STD	STANDARD
STL	STEEL
STOR	STORAGE
STRUCT	STRUCTURAL
SYS	SYSTEM
T&B	TOP AND BOTTOM
T&G	TONGUE AND GROOVE
TO	TOP OF
TOF	TOP OF FOOTING
TOW	TOP OF WALL
TYP	TYPICAL
TS	TUBE STEEL
UNO	UNLESS NOTED OTHERWISE
VERT	VERTICAL
W	WATER
W/	WITH
WD	WOOD
WP	WATERPROOF
WR	WATER RESISTANT
WWF	WELDED WIRE FABRIC
WWM	WELDED WIRE MESH

ELECTRICAL SYMBOLS

MARK	DESCRIPTION
	CEILING SURFACE MOUNTED
	CEILING PENDANT
	SURFACE MOUNTED
P.C.	SURFACE MOUNTED PULL CHAIN
	RECESSED DOWN LIGHT
	RECESSED WALL WASHER
	RECESSED 6" CAN LIGHT/FAN COMBO FIXTURE
W.P.	RECESSED WATERPROOF 6" CAN LIGHT FIXTURE
	EXHAUST FAN
S	INTER-CONNECTING SMOKE DETECTOR
	CONVENIENCE OUTLET 110V.
	CONVENIENCE OUTLET 220V.
	HALF-SWITCHED DUPLEX OUTLET
GFI	GROUND FAULT INDICATOR DUPLEX OUTLET
W.P.	WEATHER PROOF CONVENIENCE OUTLET
	FOURPLEX OUTLET
	FLOOR OUTLET
$	SINGLE SWITCH
$3	3-WAY SWITCH
$4	4-WAY SWITCH
	LIGHT TRACK
FA	EXHAUST FAN
J	JUNCTION BOX
	TELEVISION OUTLET
	JUNCTION BOX
	HEAVY DUTY GARAGE DOOR OPENER
	TELEPHONE OUTLET
	TELEVISION OUTLET
	FLUORESCENT TUBE FIXTURE
	CEILING FAN

MATERIALS AND TYPES

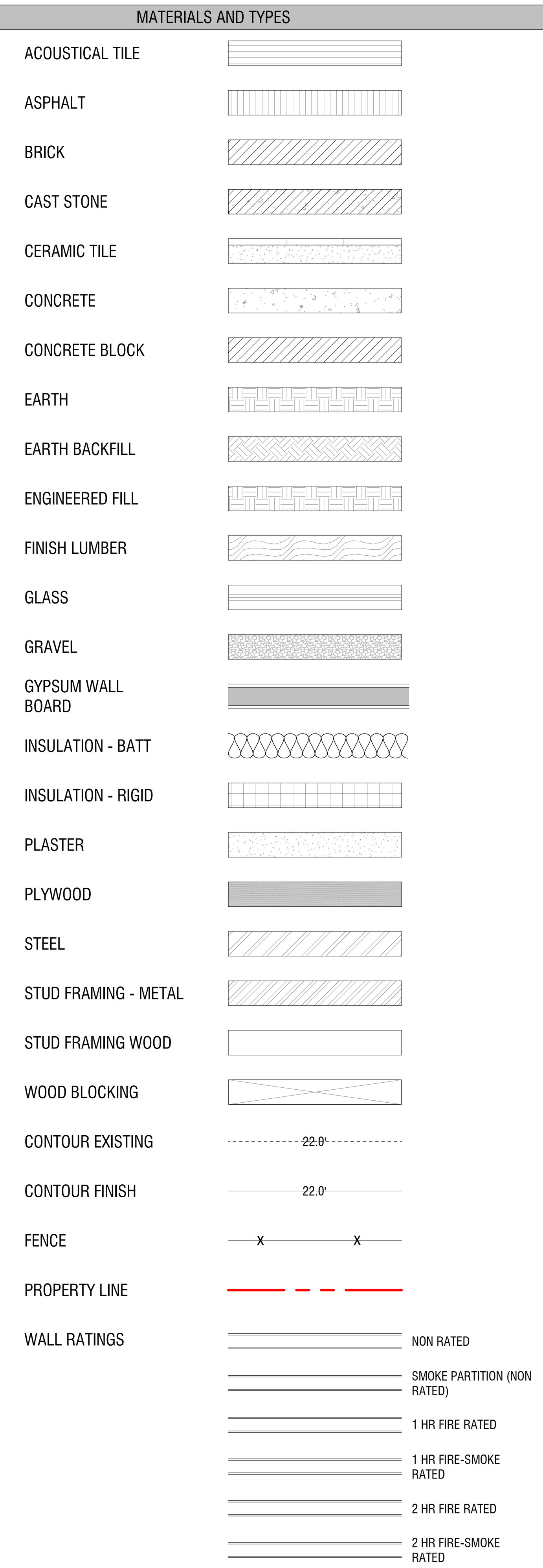

SYMBOLS LEGEND

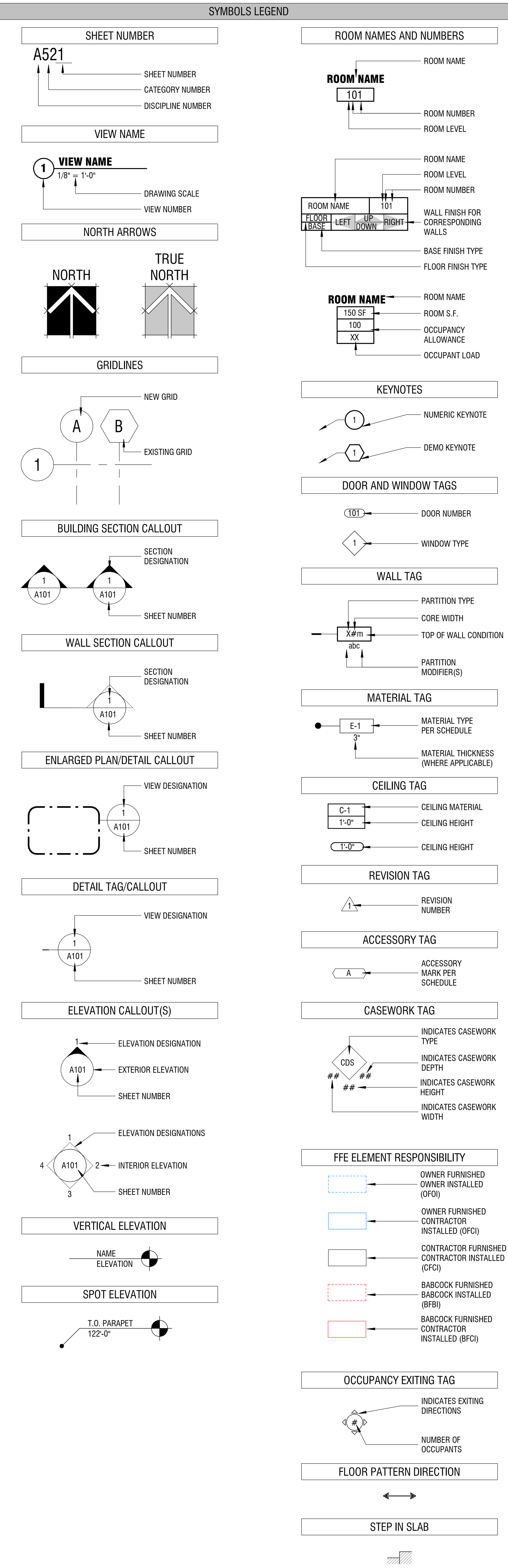

GENERAL NOTES

1. THE CONTRACTOR SHALL BE RESPONSIBLE FOR OBTAINING ANY AND ALL PERMITS THAT ARE REQUIRED BEFORE AND DURING THE CONSTRUCTION PROCESS PRIOR TO THE COMMENCEMENT OF ANY WORK, AND SHALL BE REQUIRED TO CONTACT THE PROPER AUTHORITIES HAVING JURISDICTION.
2. THE CONTRACTOR SHALL CAREFULLY READ, STUDY, AND UNDERSTAND ALL PLANS AND SPECIFICATIONS FOR TRADES. COORDINATION BETWEEN TRADES WILL BE NECESSARY AND THE RESPONSIBILITY OF THE CONTRACTOR. ANY QUESTIONS THAT ARISE SHALL BE CLARIFIED BY THE ARCHITECT PRIOR TO CONSTRUCTION.
3. CONTRACTOR WILL VERIFY ALL CONDITIONS. DIMENSIONS AND ELEVATIONS, ETC. AT THE SITE AND WILL COORDINATE WORK PERFORMED BY ALL TRADES.
4. DRAWINGS ARE NOT TO BE SCALED. DIMENSIONAL DISCREPANCIES ARE TO BE CLARIFIED WITH THE ARCHITECT BEFORE PROCEEDING WITH CONSTRUCTION.
5. CONTRACTOR SHALL VERIFY ALL EXISTING UTILITIES PRIOR TO EXCAVATION. CONTACT BLUE-STAKE OR AUTHORITIES HAVING JURISDICTION.
6. CONTRACTOR WILL NOTIFY ARCHITECT / ENGINEER OF ANY DISCREPANCIES, OMISSIONS OR CONFLICTS BETWEEN THE VARIOUS ELEMENTS OF THE WORKING DRAWINGS AND / OR SPECIFICATIONS BEFORE PROCEEDING WITH ANY WORK INVOLVED. IN ALL CASES, UNLESS OTHERWISE DIRECTED. THE MOST STRINGENT REQUIREMENTS WILL GOVERN.
7. THE ARCHITECTS APPROVAL MUST BE OBTAINED FOR ANY DEVIATIONS FROM THE CONSTRUCTION DOCUMENTS, INCLUDING BUT NOT LIMITED TO CHANGES IN DIMENSIONS, DESIGN, MATERIALS, PRODUCTS, AND FINISHES. IN NO CASE MAY THE CONTRACTOR MAKE THESE CHANGES WITHOUT THE APPROVAL OF THE ARCHITECT.
8. SHOP DRAWINGS AND OTHER SUBMITTALS ARE TO BE PRESENTED TO THE ARCHITECT FOR REVIEW PRIOR TO EXECUTION OF WORK. ALLOW APPROPRIATE TIME FOR REVIEW. COORDINATE WITH ADDITIONAL GENERAL NOTES, ENERGY CONSERVATION NOTES, AND STRUCTURAL NOTES.
9. SHOP DRAWINGS WILL BE PROVIDED TO THE CONTRACTOR BY SUPPLIER OR PRODUCT MANUFACTURER PRIOR TO INSTALLATION, FABRICATION, OR ERECTION OF ANY PREFABRICATED OR MANUFACTURER DESIGNED COMPONENTS. THESE DRAWINGS WILL BE STAMPED BY A PROFESSIONAL ENGINEER REGISTERED IN THE STATE WHERE THIS STRUCTURE RESIDES. COPIES OF THE SHOP DRAWINGS ARE TO BE PROVIDED TO THE ARCHITECT FOR REVIEW PRIOR TO ORDERING OR INSTALLATION.
10. ALL CONSTRUCTION SHALL CONFORM TO AND STRICTLY COMPLY WITH ALL APPLICABLE CODES INCLUDING THE CURRENTLY ADOPTED INTERNATIONAL BUILDING CODE, COVENANTS AND RESTRICTIONS AND LOCAL BUILDING AND HOUSING STANDARDS.
11. IN NO EVENT SHALL THE CONTRACTOR SUBSTITUTE A STANDARD CONSTRUCTION DETAIL FOR A DETAIL SPECIFIED IN THESE DOCUMENTS. THE CONTRACTOR SHALL BRING ALL WORK INTO CONFORMITY WITH THE CONSTRUCTION DOCUMENTS AS THE ARCHITECT ORDERS BEFORE APPROVAL OF THAT CONSTRUCTION WILL BE GRANTED. NOTES AND DETAILS ON THE DRAWINGS WILL TAKE PRECEDENCE OVER GENERAL NOTES AND TYPICAL DETAILS.
12. IN INSTANCES WHERE ITEMS ARE TO BE SELECTED BY OWNER, THE DETAILS PROVIDED BY THE ARCHITECT ARE OF A GENERIC NATURE. IT IS THE RESPONSIBILITY OF THE GENERAL CONTRACTOR TO COORDINATE THE SELECTED MANUFACTURERS SPECIFIC DETAILS WITH THE PROVIDED DETAILS AND ADJUST CONSTRUCTION ACCORDINGLY. IN SUCH INSTANCES CONSULT WITH THE ARCHITECT / ENGINEER PRIOR TO INSTALLATION. THE SELECTED MANUFACTURERS RECOMMENDED INSTALLATION PROCEDURES, INDUSTRY STANDARDS, AND APPLICABLE CODE REQUIREMENTS MUST BE FOLLOWED.
13. IN INSTANCES WHERE ITEMS ARE TO BE SELECTED BY OWNER, ORDERING, DELIVERY, OR INSTALLATION WILL NOT TAKE PLACE UNTIL WRITTEN AUTHORIZATION IS OBTAINED FROM THE OWNER OR OWNER'S AGENT.
14. ALL WATER HEATERS ARE TO HAVE SEISMIC TIE DOWNS. PROVIDE AN UNOBSTRUCTED WORKING SPACE NOT LESS THAN 30" IN DEPTH, AND CLEAR ACCESS OF 36" IN WIDTH IN FRONT OF FIREBOX.
15. PROVIDE A CONTINUOUS 3/4" BEAD OF 100% SILICONE SEALANT AT ALL EXTERIOR JOINTS – SEE SPECIFICATIONS.
16. REFER TO STRUCTURAL DRAWINGS FOR ALL FOOTING AND FOUNDATION WALLS, CONCRETE REINFORCING, BEARING WALLS, SHEAR WALLS, COLUMNS, BEAMS, PRIMARY STRUCTURAL FRAMES, FLOOR FRAMING, ROOF FRAMING, SECONDARY FRAMING, AND ASSOCIATED CONNECTION DETAILS. COORDINATE ALL RELATED WORK WITH GENERAL STRUCTURAL NOTES, SCHEDULES, AND DETAILS.
17. REFER TO ELECTRICAL DRAWINGS FOR ALL ELECTRICAL EQUIPMENT, PANEL LOCATIONS, WIRING DIAGRAMS, AND FIXTURE LOCATIONS. COORDINATE ANY RELATED WORK WITH GENERAL ELECTRICAL NOTES AND ELECTRICAL FIXTURE SCHEDULES.
18. REFER TO MECHANICAL DRAWINGS FOR ALL MECHANICAL EQUIPMENT, DUCT WORK, MECHANICAL PIPING, AND EXHAUST. COORDINATE ANY RELATED WORK WITH GENERAL MECHANICAL NOTES, SCHEDULES, AND DETAILS.
19. REFER TO PLUMBING DRAWINGS FOR ALL PLUMBING EQUIPMENT, FIXTURES, AND RELATED PIPING, I.E.; STORM SEWER, SANITARY SEWER, AND DOMESTIC WATER SUPPLY. COORDINATE ANY RELATED WORK WITH GENERAL PLUMBING NOTES, SCHEDULES, AND DETAILS.
20. CONTRACTOR AND ALL SUBCONTRACTORS WILL PERFORM THEIR TRADES AND DUTIES IN A MANNER CONFORMING TO THE PROCEDURES AND REQUIREMENTS AS STATED IN THE CURRENTLY ADOPTED INTERNATIONAL BUILDING CODE. THE CONTRACTOR WILL COORDINATE ALL REQUIRED INSPECTIONS AND WILL NOT PROCEED WITH WORK UNTIL THE REQUIRED INSPECTIONS HAVE BEEN COMPLETED.
21. ANY SPECIAL INSPECTION REQUIRED BY THE BUILDING OFFICIAL OR THE BUILDING CODE ARE NOT THE RESPONSIBILITY OF THE ARCHITECT.
22. CONTRACTOR WILL BE RESPONSIBLE FOR SAFETY AND PROTECTION WITHIN AND ADJACENT TO THE JOB SITE.
23. DURING CONSTRUCTION OPEN EXCAVATIONS AND TRENCHES WILL BE SUPPORTED AND BARRICADED BY CONTRACTOR TO CONFORM WITH OSHA SAFETY STANDARDS.
24. TEMPORARY BRACING WILL BE PROVIDED WHEREVER NECESSARY TO TAKE CARE OF ALL LOADS TO WHICH THE STRUCTURE MAY BE SUBJECTED, INCLUDING WIND. SUCH BRACING WILL BE LEFT IN PLACE AS LONG AS MAY BE REQUIRED FOR SAFETY, OR UNTIL ALL THE STRUCTURAL ELEMENTS ARE COMPLETE.
25. PROVIDE AN OBVIOUS TURN OFF FOR WATER SUPPLY IN MECHANICAL AREA.
26. FINISH GRADE TO SLOPE AWAY FROM STRUCTURE 6" MIN. IN FIRST 10' AND 2% THERE AFTER. COORDINATE WITH CIVIL.
27. ALL DIMENSIONS ARE TO FACE OF STUD OR TO FACE OF FOUNDATION WALL UNLESS OTHERWISE NOTED.
28. ALL WOOD IN CONTACT WITH CONCRETE SHALL BE TREATED.
29. COORDINATE WITH FRAMING PLANS FOR LOCATIONS OF COLUMNS, BEAMS, MOMENT FRAMES, ETC.
30. VISITS TO THE JOB SITE BY THE ARCHITECT OR HIS CONSULTANTS DO NOT CONSTITUTE APPROVAL OF THE WORK PERFORMED BY THE GENERAL CONTRACTOR OR HIS SUBCONTRACTORS. ANY SUCH VISITS ARE SOLELY FOR THE PURPOSE OF OBSERVING THE WORK BEING PERFORMED.

Babcock Design

Salt Lake City
52 Exchange Place
Salt Lake City, UT 84111
801.531.1144

Boise
800 W Main Street, Suite 940
Boise, ID 83702
208.424.7675

babcock**design**.com

Consultant

CITY OF ALPINE

ALPINE FIRE STATION #202

50 E 100 N ALPINE, UT 84004

Revisions

Num.	Description	Date

Project Number	25116
Original Issue	04.16.2026
Project Status	CONSTRUCTION DOCUMENTS

The information and content represented herein is considered by law the architect's instruments of service and are the property of Babcock Design. They are available for limited review and evaluation by clients, consultants, contractors, government agencies, vendors, and office personnel only in accordance with this notice. They are intended for use only for the project specified and are to be used for no other purpose or project including additions to or modification of the completed project. No part thereof may be copied, reproduced, photographed, modified, published, uploaded, transmitted, disclosed, sold, distributed to others in any way including in digital form, or otherwise used without the prior written consent of Babcock Design.

COPYRIGHT © 2025 BABCOCK DESIGN

Stamp

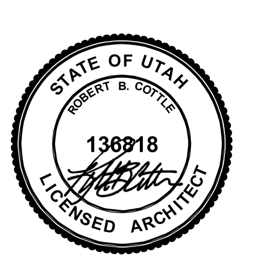

Sheet Title

GENERAL NOTES, LEGENDS, ABBREVIATIONS, AND SYMBOLS

Sheet Number

G002

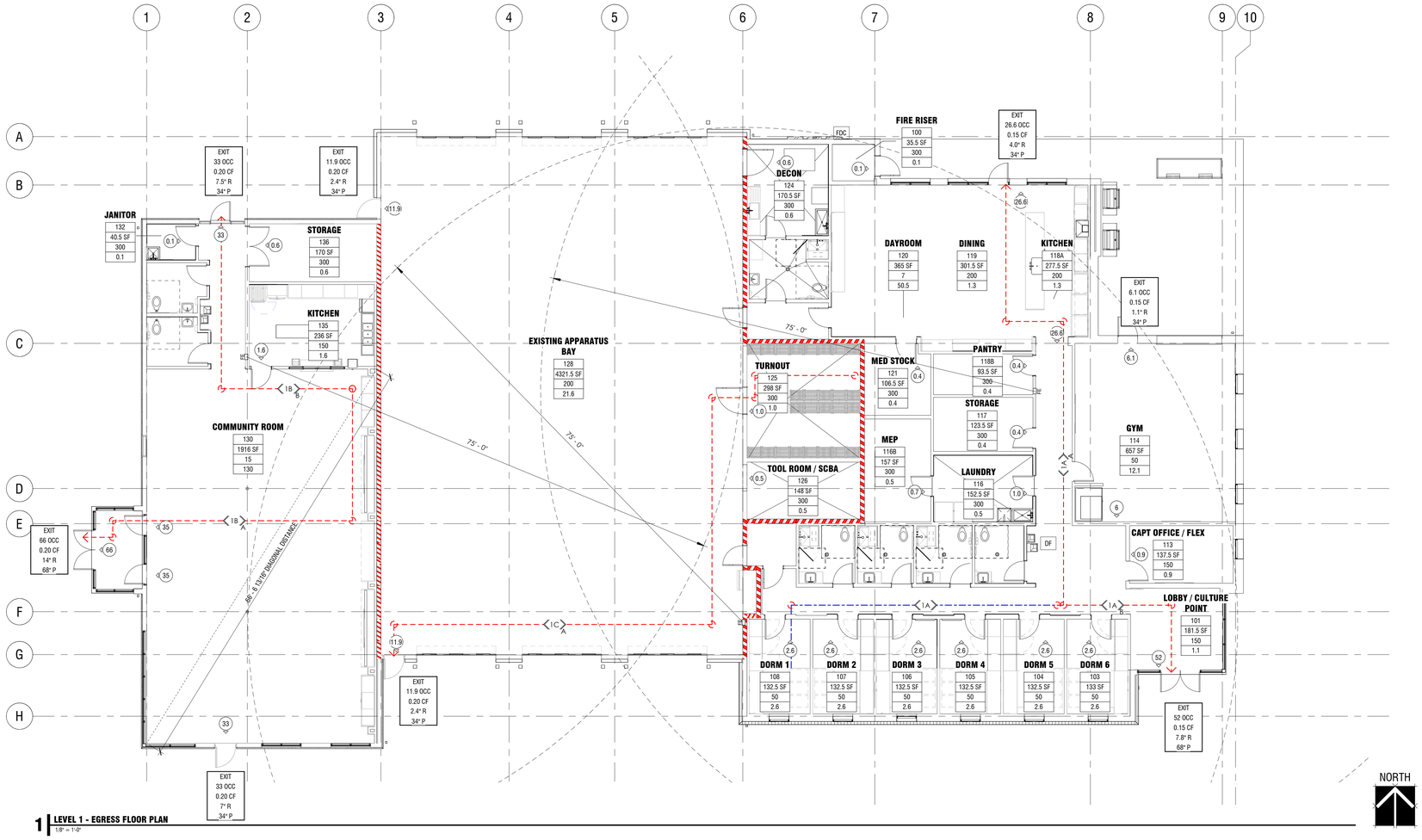

1 LEVEL 1 - EGRESS FLOOR PLAN
1/8" = 1'-0"

CODE REVIEW GENERAL NOTES

1. DO NOT SCALE DRAWINGS, IF DIMENSIONAL INFORMATION IS REQUIRED & NOT FOUND, NOTIFY ARCHITECT IMMEDIATELY FOR CLARIFICATION.
2. SEE SHEET G001 FOR GENERAL CODE AND PROJECT SPECIFIC CODE INFORMATION.
3. SEE SHEET G002 FOR GENERAL NOTES
4. CONTRACTOR TO COORDINATE ALL FLOOR PENETRATIONS WITH ALL TRADES. ALL PENETRATIONS ARE TO BE 1-HOUR FIRE STOPPED.
5. HIGHER RATED FIRE WALLS TAKE PRECEDENCE OVER LOWER RATED WALLS AND ARE TO CONTINUE THROUGH ALL SUCH INTERSECTIONS.
6. SEE A100 SHEETS FOR WALL TYPE DESIGNATIONS.
7. SEE A500 SHEETS FOR DETAILS.
8. SEE A600 SHEETS FOR WALL ASSEMBLIES, TOP OF WALL DETAILS, UL LISTINGS, ETC.

SYMBOLS LEGEND

- DF — DRINKING FOUNTAIN
- FE — FIRE EXTINGUISHER - THE MAXIMUM TRAVEL DISTANCE TO REACH AN EXTINGUISHER FROM ANY POINT IN THE BUILDING SHALL NOT EXCEED 75 FEET - COORDINATE FINAL LOCATION WITH FIRE MARSHAL
- FDC — FIRE DEPARTMENT CONNECTION
- EXIT 270 OCC 0.15 CF 40.5" R 69" P — MAXIMUM OCCUPANT LOAD THRU EXIT; CAPACITY FACTOR (STAIRS PER 1005.3.1; OTHER PER 1005.3.2 EXCEPTION 2012 IBC); MINIMUM REQUIRED EXIT WIDTH; EXIT WIDTH PROVIDED; DOORS MEASURED BETWEEN DOOR FACE AND STOP
- 1A / A — EGRESS ACCESS PATH; SUB-PATH; PATH ID (SEE EXIT ACCESS DISTANCE SCHEDULE)
- 2A — COMMON PATH OF TRAVEL

EXIT ACCESS DISTANCE

- EXIT ACCESS TRAVEL DISTANCE = 200 MAX ASSEMBLY (NONSPRINKLERED) OR 250 MAX R-2 (SPRINKLERED)PER 2018 IBC 1017.2
- COMMON PATH OF TRAVEL = 75' ASSEMBLY (NONSPRINKLERED) OR 125 R-2 (SPRINKLERED), MAX PER 1018 IBC...

PATH ID	COMMON PATH DISTANCE	SUB-PATH (A) TOTAL	SUB PATH (B) TOTAL
1A	82' - 7"	171' - 11"	129' - 4"
1B	0' - 0"	63' - 4"	45' - 11"
1C	0' - 0"	112' - 4"	0' - 0"

FIRE RATING LEGEND

NOT ALL FIRE RATINGS MAY BE USED ON THIS PROJECT. DRAWINGS SHOULD BE VIEWED/PRINTED IN COLOR TO ACCURATELY DEPICT THE RATED WALL CONDITION.

- 1-HR FIRE BARRIER/PARTITION *(IBC 707, 708)*
- 2-HR FIRE BARRIER *(IBC 707)*

OCCUPANCY LOAD CALCULATION PER 2018 IBC TABLE 1004.5

NUMBER	NAME	ROOM OCCUPANCY	AREA	S.F. PER PERSON	# OF OCCUPANTS
LEVEL 1					
100	FIRE RISER	Accessory Storage Areas, Mechanical Equipment Room	35.61 SF	300	0.1
101	LOBBY / CULTURE POINT	Business Areas	181.72 SF	150	1.2
102	DORM CORRIDOR	(none)	383.80 SF		0.0
103	DORM 6	Dormitories	132.97 SF	50	2.7
104	DORM 5	Dormitories	132.67 SF	50	2.7
105	DORM 4	Dormitories	132.67 SF	50	2.7
106	DORM 3	Dormitories	132.67 SF	50	2.7
107	DORM 2	Dormitories	132.67 SF	50	2.7
108	DORM 1	Dormitories	132.67 SF	50	2.7
109	DORM RR	(none)	73.88 SF		0.0
110	DORM RR	(none)	73.83 SF		0.0
111	DORM RR	(none)	73.88 SF		0.0
112	PUBLIC RR	(none)	64.88 SF		0.0
113	CAPT OFFICE / FLEX	Business Areas	137.38 SF	150	0.9
114	GYM	Exercise Rooms	656.85 SF	50	13.1
115	CORRIDOR	(none)	153.71 SF		0.0
116	LAUNDRY	Accessory Storage Areas, Mechanical Equipment Room	152.61 SF	300	0.5
116B	MEP	Accessory Storage Areas, Mechanical Equipment Room	156.91 SF	300	0.5
117	STORAGE	Accessory Storage Areas, Mechanical Equipment Room	123.41 SF	300	0.4
118A	KITCHEN	Residential	277.56 SF	200	1.4
118B	PANTRY	Accessory Storage Areas, Mechanical Equipment Room	93.26 SF	300	0.3
119	DINING	Residential	301.41 SF	200	1.5
120	DAYROOM	Assembly - Concentrated (chairs only - not fixed)	364.88 SF	7	52.1
121	MED STOCK	Accessory Storage Areas, Mechanical Equipment Room	106.60 SF	300	0.4
122	AIRLOCK	(none)	68.26 SF		0.0
123	DECON RR	(none)	96.20 SF		0.0
124	DECON	Accessory Storage Areas, Mechanical Equipment Room	170.44 SF	300	0.6
125	TURNOUT	Accessory Storage Areas, Mechanical Equipment Room	298.09 SF	300	1.0
126	TOOL ROOM / SCBA	Accessory Storage Areas, Mechanical Equipment Room	147.88 SF	300	0.5
127	AIRLOCK	(none)	48.36 SF		0.0
128	EXISTING APPARATUS BAY	Parking Garages	4,321.60 SF	200	21.6
129	VESTIBULE	(none)	89.17 SF		0.0
130	COMMUNITY ROOM	Assembly - Unconcentrated (tables and chairs)	1,915.76 SF	15	127.7
131	RESTROOM	(none)	66.06 SF		0.0
132	JANITOR	Accessory Storage Areas, Mechanical Equipment Room	40.37 SF	300	0.1
133	RESTROOM	(none)	65.57 SF		0.0
135	KITCHEN	Business Areas	236.16 SF	150	1.6
136	STORAGE	Accessory Storage Areas, Mechanical Equipment Room	169.75 SF	300	0.6
137	COMMUNITY ROOM BOH	(none)	134.66 SF		0.0
143	GENERATOR	(none)	222.39 SF		0.0
			12,299.25 SF		242.1
Grand total			12,299.25 SF		242.1

PLUMBING FIXTURE CALCULATIONS PER TABLE 2901.1

LEVEL 1	OCCUPANT COUNTS			PLUMBING LOAD FACTOR					WATER CLOSETS		LAVATORIES		BATHTUBS/ SHOWERS	DRINKING FOUNTAINS	SERVICE SINK
OCCUPANCY	Total	Male	Female	WC Male Load	WC Female Load	Lav Load	B/S Load	DF Load	Male	Female	Male	Female			
R-2 — Dormitories	88	44	44	10	10	8	0	--	4.40	4.40	5.50	5.50	0.88		Note 1
A-3 — Auditoriums, museums, library's, etc.	133	66.5	66.5	125	65	200	0	500	0.33	1.02	0.33	0.33		0.27	Note 1
B-2 — Storage structures	24	12	12	100	100	100	0	1000	0.12	0.12	0.12	0.12	See IPC	0.02	Note 1
	245	**122.5**	**122.5**												
								Required	**4.00**	**6.00**	**4.00**	**4.00**	**1.00**	**1.00**	**1.00**
								Provided	**4**	**6**	**4**	**4**	**4**	**4**	**1**

Notes:
1. The code requires only one service sink per building if all occupancies have access to the service sink at all times.
2. Service sinks are not required in Business and Mercantile occupancies with an occupant load of 15 or fewer.
3. 1 service sink per floor
4. Service sink not required
5. Per Section 410.3 of IPC 2012, where restaurants provide drinking water in a container free of charge, drinking fountains shall not be required in those restaurants.

Babcock Design

Salt Lake City
52 Exchange Place
Salt Lake City, UT 84111
801.531.1144

Boise
800 W Main Street, Suite 940
Boise, ID 83702
208.424.7675

babcock**design**.com

Consultant

CITY OF ALPINE

ALPINE FIRE STATION #202

50 E 100 N ALPINE, UT 84004

Revisions

Num.	Description	Date

Project Number	25116
Original Issue	04.16.2026
Project Status	CONSTRUCTION DOCUMENTS

The information and content represented herein is considered by law the architect's instruments of service and are the property of Babcock Design. They are available for limited review and evaluation by clients, consultants, contractors, government agencies, vendors, and office personnel only in accordance with this notice. They are intended for use only for the project specified and are to be used for no other purpose or location without the written permission of Babcock Design. Unauthorized use, sharing, copying, duplicating, reproduced, photographed, modified, published, uploaded, transmitted, disclosed, sold, distributed to others in any way including in digital form, or otherwise used without the prior written consent of Babcock Design.

COPYRIGHT © 2025 BABCOCK DESIGN

Stamp

STATE OF UTAH · HENRY R. COFFEY · 136918 · LICENSED ARCHITECT

Sheet Title

CODE - EGRESS LIFE SAFETY

Sheet Number

G101

Original drawing is 30" x 42" Autodesk Docs://25116 - ALPINE FIRE STATION 202/25116 - Alpine Fire Station 202.rvt
Current as of: 4/16/2026 9:53:31 PM

1 LEVEL 1 - REFLECTED CEILING PLAN FOR FIRE PROOFING
1/8" = 1'-0"

CODE REVIEW GENERAL NOTES

1. DO NOT SCALE DRAWINGS, IF DIMENSIONAL INFORMATION IS REQUIRED & NOT FOUND, NOTIFY ARCHITECT IMMEDIATELY FOR CLARIFICATION.
2. SEE SHEET G001 FOR GENERAL CODE AND PROJECT SPECIFIC CODE INFORMATION.
3. SEE SHEET G002 FOR GENERAL NOTES
4. CONTRACTOR TO COORDINATE ALL FLOOR PENETRATIONS WITH ALL TRADES. ALL PENETRATIONS ARE TO BE 1-HOUR FIRE STOPPED.
5. HIGHER RATED FIRE WALLS TAKE PRECEDENCE OVER LOWER RATED WALLS AND ARE TO CONTINUE THROUGH ALL SUCH INTERSECTIONS.
6. SEE A100 SHEETS FOR WALL TYPE DESIGNATIONS.
7. SEE A500 SHEETS FOR DETAILS.
8. SEE A600 SHEETS FOR WALL ASSEMBLIES, TOP OF WALL DETAILS, UL LISTINGS, ETC.

FIRE RATED STRUCTURE LEGEND

A-3 ASSEMBLY TO BE SEPARATED BY 1 HOUR FIRE RATED PARTITION COMPLYING WITH IBC SECTION 708.

R-2 CONGREGATE LIVING FACILITY TO BE SEPARATED BY A 2 HOUR FIRE RATED PARTITION COMPLYING WITH IBC SECTION 707.

1-HOUR FIRE RATED PARTITION

2-HOUR FIRE RATED PARTITION - (ALL DOORS WITHIN THE FIRE RATED PARTITION TO BE A 90 MIN. FIRE RATED DOOR)

FIRE RATING LEGEND

NOT ALL FIRE RATINGS MAY BE USED ON THIS PROJECT. DRAWINGS SHOULD BE VIEWED/PRINTED IN COLOR TO ACCURATELY DEPICT THE RATED WALL CONDITION.

1-HR FIRE BARRIER/PARTITION *(IBC 707, 708)*

2-HR FIRE BARRIER *(IBC 707)*

SHEET NOTES

NOTE: THESE NOTES APPLY TO THIS SHEET ONLY.

#

1 OPERABLE EGRESS WINDOW - SEE PLAN AND WINDOW SCHEDULE

Babcock Design

Salt Lake City
52 Exchange Place
Salt Lake City, UT 84111
801.531.1144

Boise
800 W Main Street, Suite 940
Boise, ID 83702
208.424.7675

babcockdesign.com

Consultant

CITY OF ALPINE

ALPINE FIRE STATION #202

50 E 100 N ALPINE, UT 84004

Revisions

Num.	Description	Date

Project Number	25116
Original Issue	04.16.2026
Project Status	CONSTRUCTION DOCUMENTS

The information and content represented herein is considered by law the architect's instruments of service and are the property of Babcock Design. They are available for limited review and evaluation by clients, consultants, contractors, government agencies, vendors, and office personnel only in accordance with this notice. They are intended for use only for the project specified and are to be used for no other purpose or project including additions to or modification of the completed project. No part thereof may be copied, reproduced, photographed, modified, published, uploaded, transmitted, disclosed, sold, distributed to others in any way including in digital form, or otherwise used without the prior written consent of Babcock Design.

COPYRIGHT © 2025 BABCOCK DESIGN

Stamp

STATE OF UTAH
ROBERT B. COTTLE
136918
LICENSED ARCHITECT

Sheet Title

CODE - FIRE RATED STRUCTURE

Sheet Number

G102

Current as of: 4/16/2026 9:44:03 PM

Original drawing is 30" x 42" Autodesk Docs://25116 - ALPINE FIRE STATION 202/25116 - Alpine Fire Station 202.rvt

DOORS AND DOORWAYS

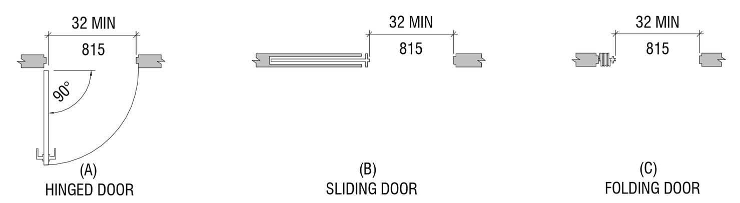

CLEAR WIDTH OF DOORWAYS
ICC FIG 404.2.2

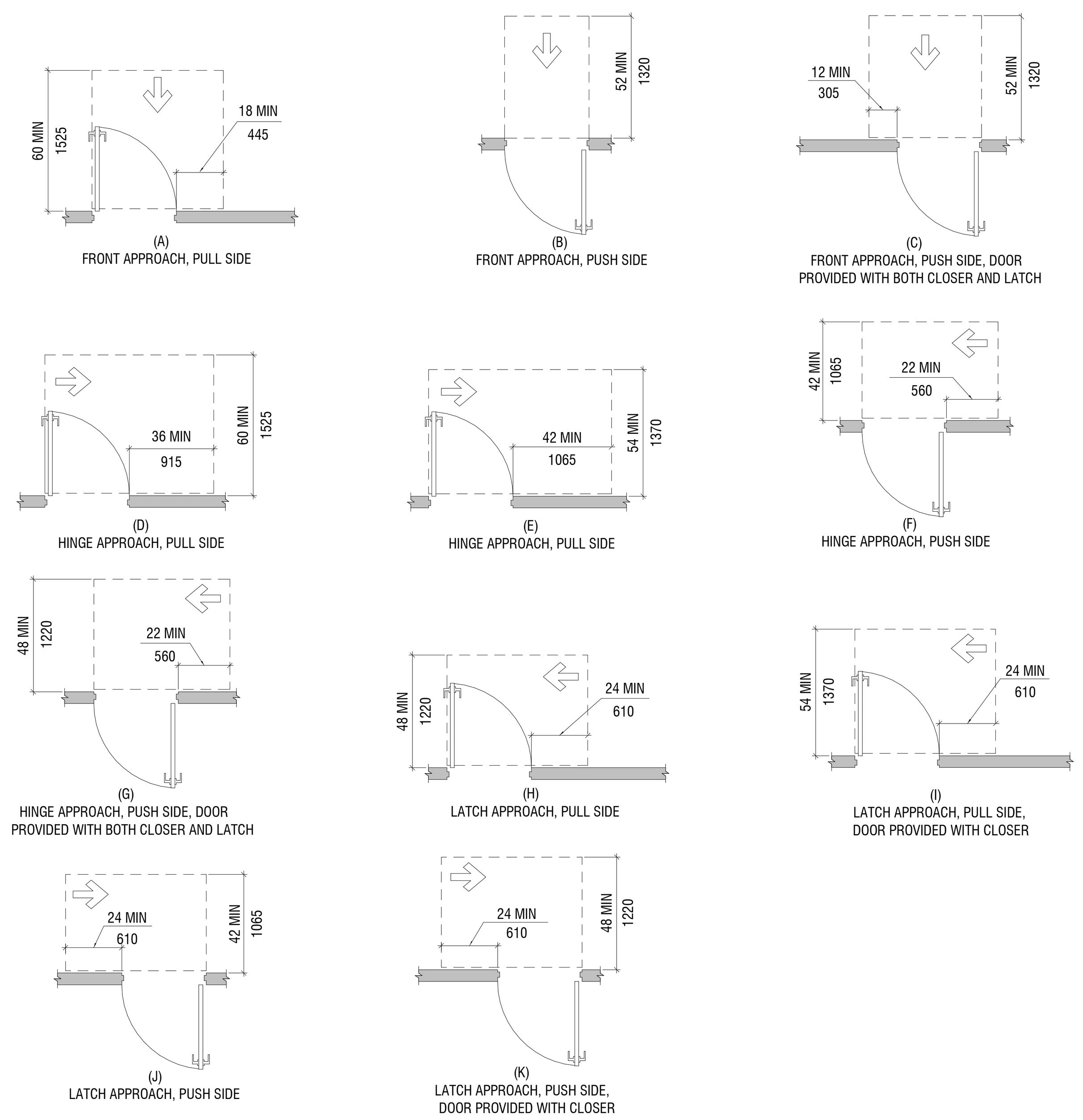

MANEUVERING CLEARANCES AT MANUAL SWINGING DOORS
ICC FIG 404.2.3.2

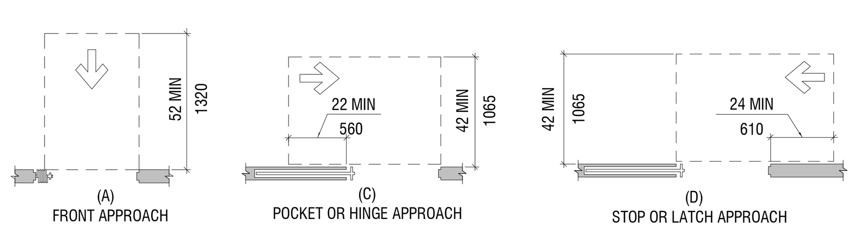

MANEUVERING CLEARANCES AT SLIDING AND FOLDING DOORS
ICC FIG 404.2.3.3

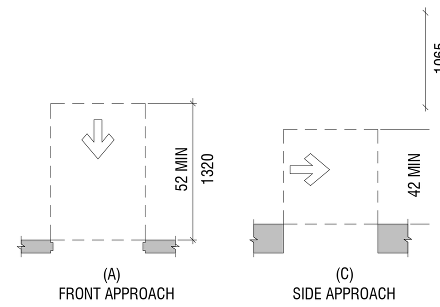

MANEUVERING CLEARANCES FOR DOORWAYS WITHOUT DOORS OT GATES
ICC FIG 404.2.3.4

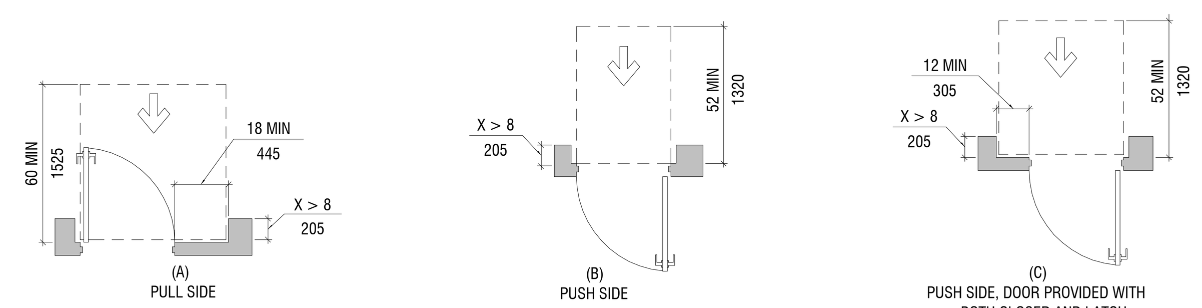

MANEUVERING CLEARANCES AT RECESSED DOORS AND GATES
ICC FIG 404.2.3.5

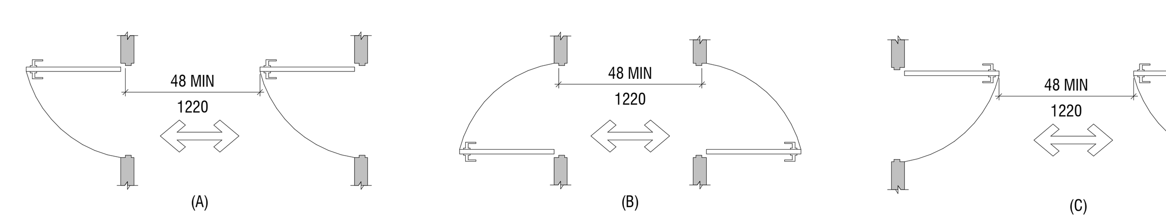

TWO DOORS OR GATES IN A SERIES
ICC FIG 404.2.5

CLEAR WIDTH OF ACCESSIBLE ROUTE

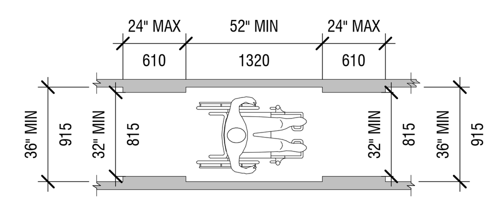

ICC FIG 403.5.1(A)
CLEAR WIDTH OF AN ACCESSIBLE ROUTE

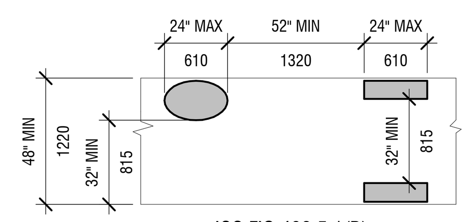

ICC FIG 403.5.1(B)
CLEAR WIDTH OF AN ACCESSIBLE ROUTE

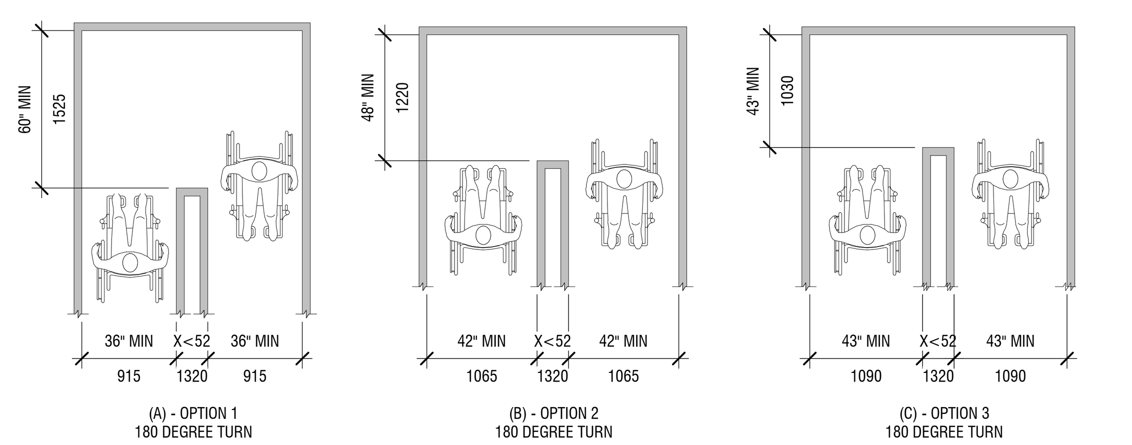

ICC FIG 403.5.2.1 (A) (B) (C)
CLEAR WIDTH AT 180-DEGREE TURN

ICC FIG 403.5.3.1(A)
CLEAR WIDTH AT 90-DEGREE TURN - OPTION 1

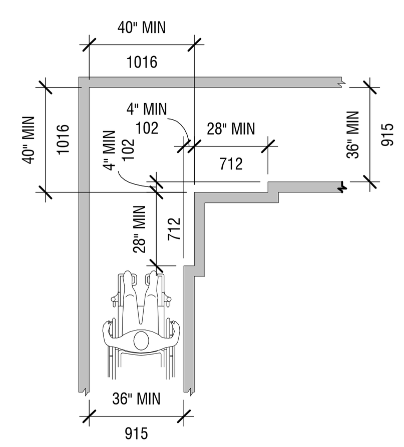

ICC FIG 403.5.3.1(C)
CLEAR WIDTH AT 90-DEGREE TURN - OPTION 3

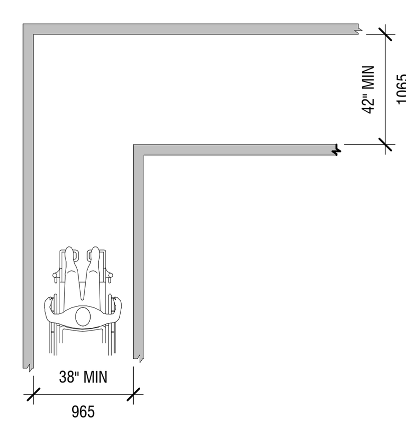

ICC FIG 403.5.3.1(B)
CLEAR WIDTH AT 90-DEGREE TURN - OPTION 2

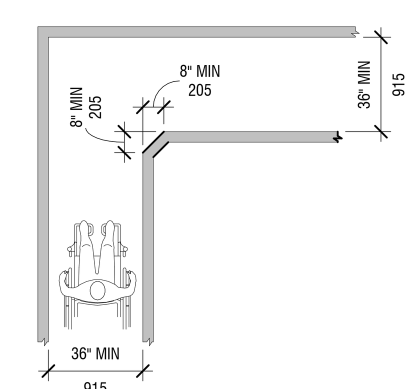

ICC FIG 403.5.3.1(D)
CLEAR WIDTH AT 90-DEGREE TURN - OPTION 4

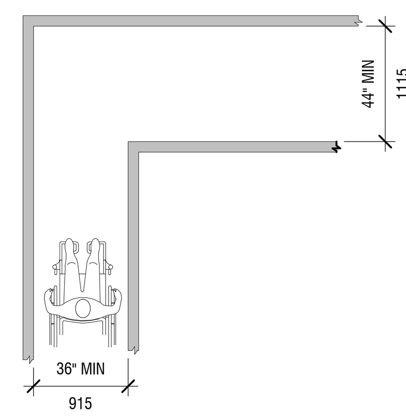

ICC/ANSI FIG 403.5.4.1(A)
PASSING SPACE - 60 X 60 OPTION

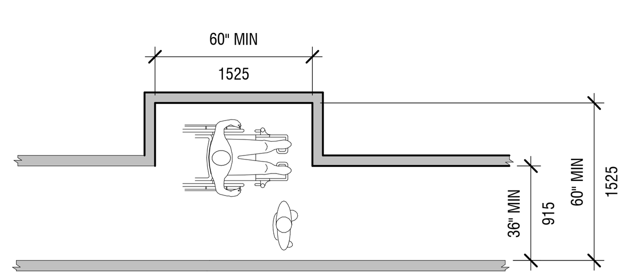

ICC/ANSI FIG 403.5.4.1(B)
PASSING SPACE - T-TURN OPTION

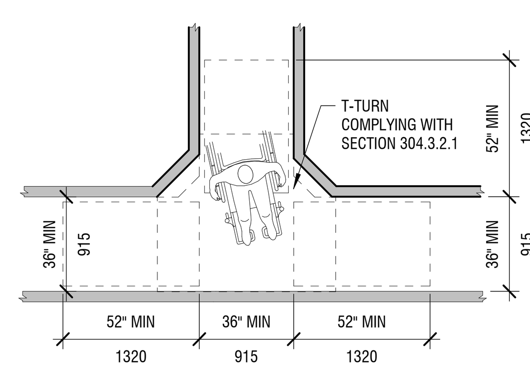

REACH RANGES

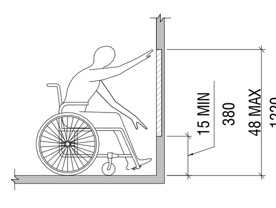

UNOBSTRUCTED FORWARD REACH
ICC FIG 308.2.1

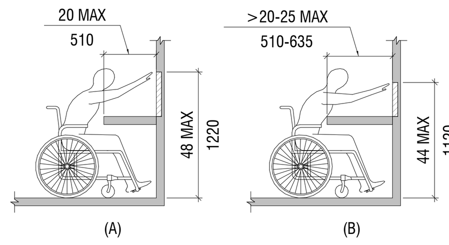

OBSTRUCTED HIGH FORWARD REACH
ICC FIG 308.2.2.

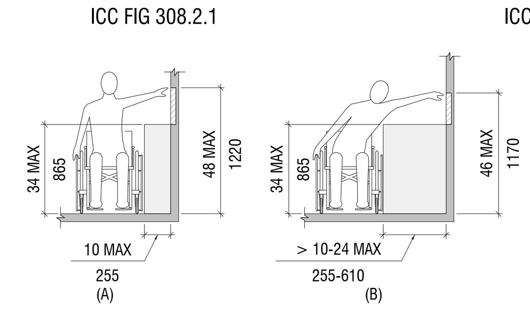

OBSTRUCTED HIGH SIDE REACH
ICC FIG 308.3.2

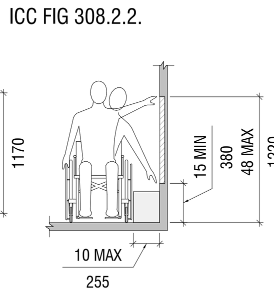

UNOBSTRUCTED SIDE REACH
FIG 308.3.1

TURNING SPACE AND CLEAR FLOOR SPACE

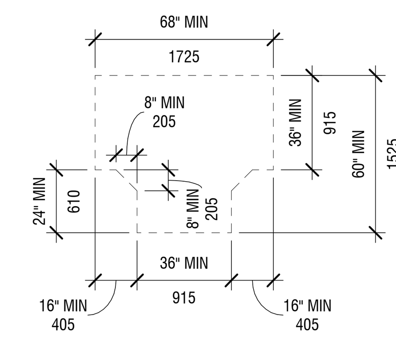

ICC FIG 304.3.2.1(A)
T-SHAPED TURNING SPACE - OPTION 1

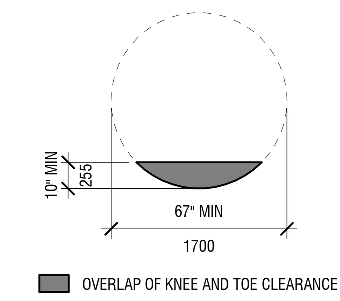

ICC FIG 304.3.1.1
CIRCULAR TURNING SPACE

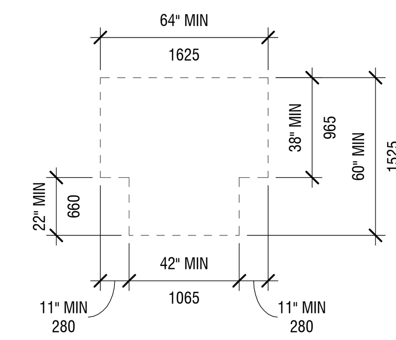

ICC FIG 304.3.2.1(B)
T-SHAPED TURNING SPACE - OPTION 2

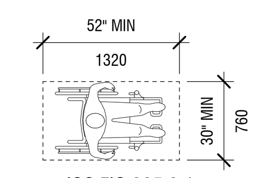

ICC FIG 305.3.1
SIZE OF CLEAR FLOOR SPACE

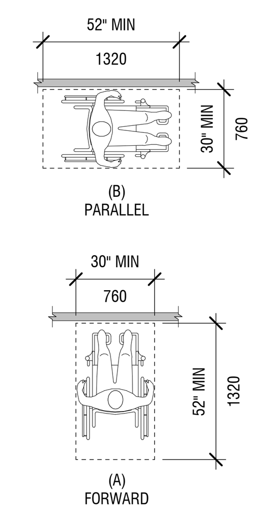

ICC FIG 305.5(A) & (B)
POSITION OF CLEAR FLOOR SPACE

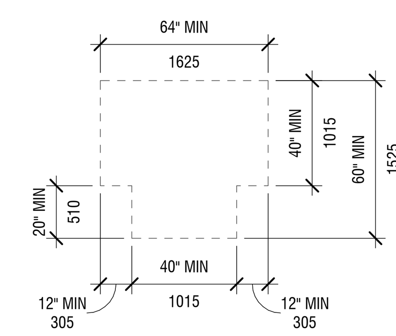

ICC FIG 304.3.2.1(C)
T-SHAPED TURNING SPACE - OPTION 3

AD-O-09_PROTRUDING OBJECTS

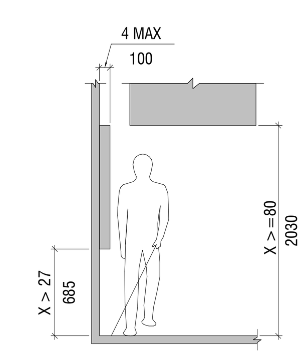

ICC/ANSI FIG 307.2
LIMITS OF PROTRUDING OBJECTS

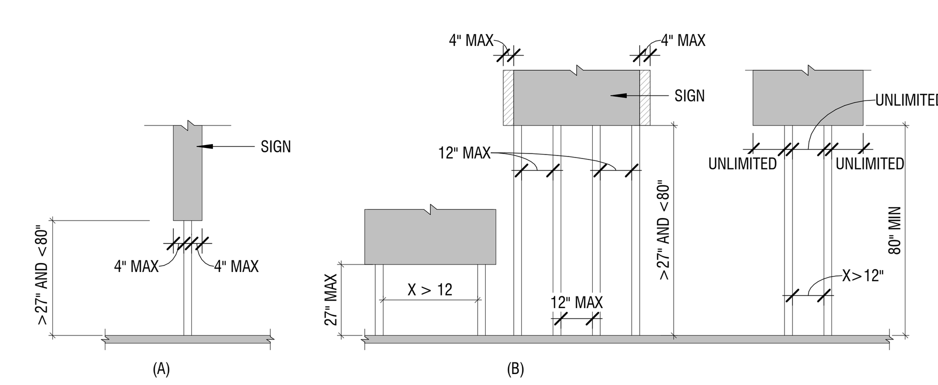

ICC FIG 307.3 (A) & (B)
POST-MOUNTED PROTRUDING OBJECTS

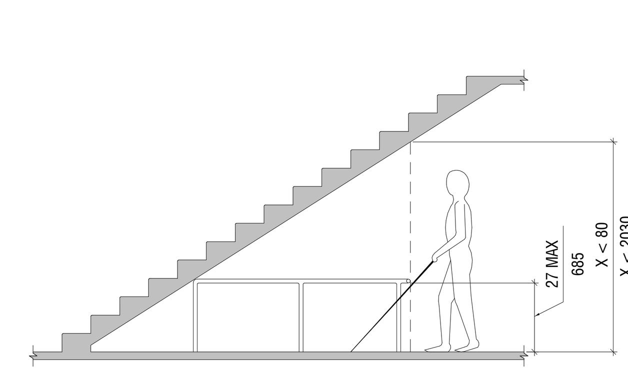

ICC 307.4
REDUCED VERTICAL CLEARANCE

GROUND AND FLOOR TRANSITIONS

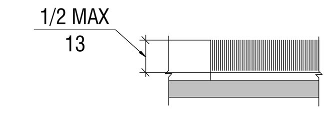

ICC FIG 302.2
CARPET ON FLOOR SURFACES

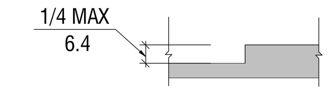

ICC FIG 302.2
CHANGES IN LEVEL

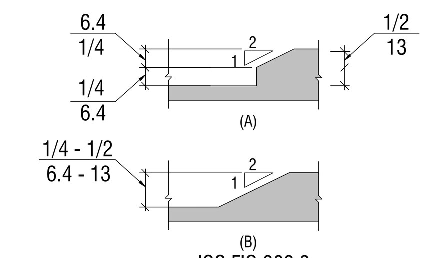

ICC FIG 303.3
BEVELED CHANGES IN LEVEL

KNEE AND TOE CLEARANCE

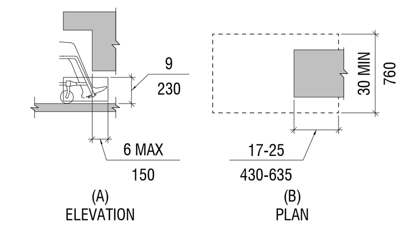

ICC FIG 306.2 (A) & (B)
TOE CLEARANCE

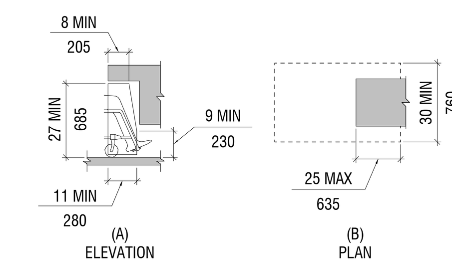

ICC FIG 306.3 (A) & (B)
KNEE CLEARANCE

Babcock Design

Salt Lake City
52 Exchange Place
Salt Lake City, UT 84111
801.531.1144

Boise
800 W Main Street, Suite 940
Boise, ID 83702
208.424.7675

babcockdesign.com

Consultant

CITY OF ALPINE

ALPINE FIRE STATION #202

50 E 100 N ALPINE, UT 84004

Revisions

Num.	Description	Date

Project Number	25116
Original Issue	04.16.2026
Project Status	CONSTRUCTION DOCUMENTS

The information and content represented herein is considered by law the architect's instruments of service and are the property of Babcock Design. They are available for limited review and evaluation by clients, consultants, contractors, government agencies, vendors, and office personnel only in accordance with this notice. They are intended for use only for the project specified and are to be used for no other purpose or project including additions to or modification of the completed project. No part thereof may be copied, reproduced, photographed, modified, published, uploaded, transmitted, disclosed, sold, distributed to others in any way including in digital form, or otherwise used without the prior written consent of Babcock Design.

COPYRIGHT © 2025 BABCOCK DESIGN

Stamp

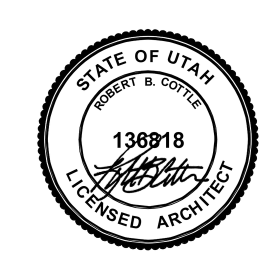

Sheet Title

GENERAL ACCESSIBILITY REQUIREMENTS

Sheet Number

G201

1 **GENERAL ACCESSIBILITY REQUIREMENTS**
1/4" = 1'-0"

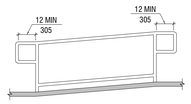

FIGURE 505.10.1
TOP AND BOTTOM HANDRAIL
EXTENSION AT RAMPS

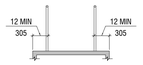

FIGURE 405.9.1
EXTENDED FLOOR OR GROUND
SURFACE EDGE PROTECTION

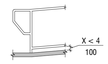

FIGURE 405.9.2
CURB OR BARRIER EDGE PROTECTION

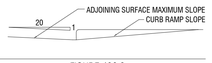

FIGURE 406.2
COUNTER SLOPE OF SURFACES
ADJACENT TO CURB RAMPS

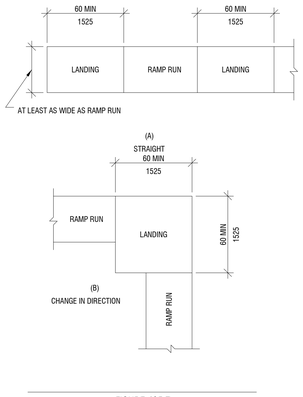

FIGURE 405.7
RAMP LANDINGS

6 RAMPS
1/4" = 1'-0"

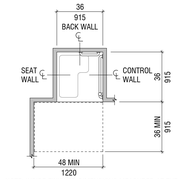

NOTE: INSIDE FINISHED DIMENSIONS MEASURED AT THE CENTER POINTS OF OPPOSING SIDES

FIGURE 608.2.1
TRANSFER-TYPE SHOWER
COMPARTMENT SIZE AND CLEARANCE

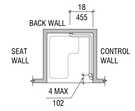

FIGURE 608.3.1
GRAB BARS IN TRANSFER-TYPE SHOWER

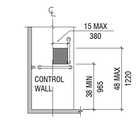

FIGURE 608.4.1
TRANSFER-TYPE SHOWER
CONTROLS AND HAND SHOWER LOCATION

3 SHOWER COMPARTMENTS
1/8" = 1'-0"

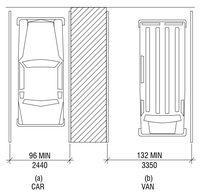

FIGURE 502.2
VEHICLE PARKING SPACES

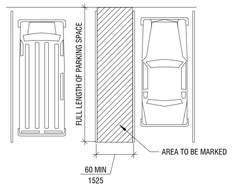

FIGURE 502.4
PARKING SPACE ACCESS AISLE

4 ACCESSIBLE PARKING SPACES
1/8" = 1'-0"

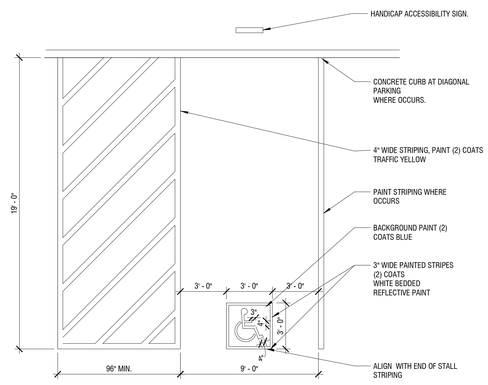

5 ADA PARKING STALL
1/4" = 1'-0"

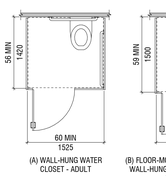

FIGURE 604.9.2
SIZE OF WHEELCHAIR
ACCESSIBLE TOILET COMPARTMENT

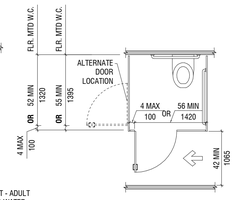

FIGURE 604.9.3.1
WHEELCHAIR ACCESSIBLE TOILET
COMPARTMENT DOORS

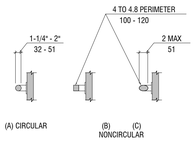

FIGURE 609.2
SIZE OF GRAB BARS

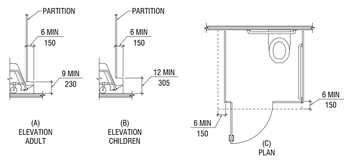

FIGURE 604.9.5
WHEELCHAIR ACCESSIBLE TOILET
COMPARTMENT TO CLEARANCE

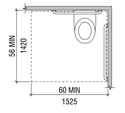

FIGURE 604.3
SIZE OF CLEARANCE AT
WATER CLOSETS

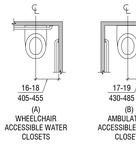

FIGURE 604.2
WATER CLOSET LOCATION

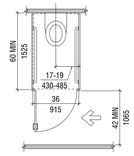

FIGURE 604.10
AMBULATORY ACCESSIBLE
TOILET COMPARTMENT

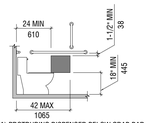

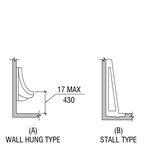

FIGURE 605.2
HEIGHT AND DEPTH OF URINALS

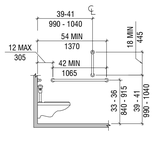

FIGURE 604.5.1
SIDE WALL GRAB BAR AT
WATER CLOSETS

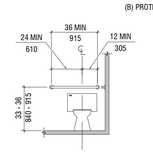

FIGURE 604.5.2
REAR WALL GRAB BAR AT
WATER CLOSETS

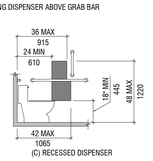

FIGURE 604.7
DISPENSER OUTLET LOCATION

1 TOILET COMPARTMENTS
1/4" = 1'-0"

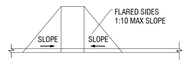

FIGURE 406.3
SIDES OF CURB RAMPS

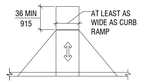

FIGURE 406.4
LANDINGS AT THE
TOP OF CURB RAMPS

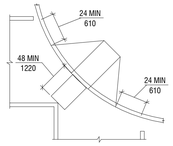

FIGURE 406.6
DIAGONAL OR CORNER TYPE CURB RAMPS

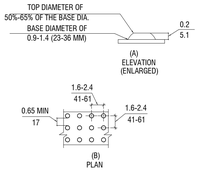

FIGURE 705.1
SIZE AND SPACING OF
TRUNCATED DOMES

2 CURB RAMPS
1/8" = 1'-0"

Babcock Design

Salt Lake City
52 Exchange Place
Salt Lake City, UT 84111
801.531.1144

Boise
800 W Main Street, Suite 940
Boise, ID 83702
208.424.7675

babcock**design**.com

Consultant

CITY OF ALPINE

ALPINE FIRE STATION #202

50 E 100 N ALPINE, UT 84004

Revisions

Num.	Description	Date

Project Number	25116
Original Issue	04.16.2026
Project Status	CONSTRUCTION DOCUMENTS

The information and content represented herein is considered by law the architect's instruments of service and are the property of Babcock Design. They are available for limited review and evaluation by clients, consultants, contractors, government agencies, vendors, and office personnel only in accordance with this notice. They are intended for use only for the project specified and are to be used for no other purpose or project including additions to or modification of the completed project. No part thereof may be copied, reproduced, photographed, or otherwise duplicated in any form whatsoever, stored in a retrieval system, distributed to others or any way including in digital form, or otherwise used without the prior written consent of Babcock Design.

COPYRIGHT © 2025 BABCOCK DESIGN

Stamp

STATE OF UTAH
ROBERT B. COTTLE
138918
LICENSED ARCHITECT

Sheet Title

GENERAL
ACCESSIBILITY
REQUIREMENTS

Sheet Number

G202

Current as of: 4/16/2026 8:44:15 PM

Original drawing is 30" x 42" Autodesk Docs://25116 - ALPINE FIRE STATION 202/25116 - Alpine Fire Station 202.rvt

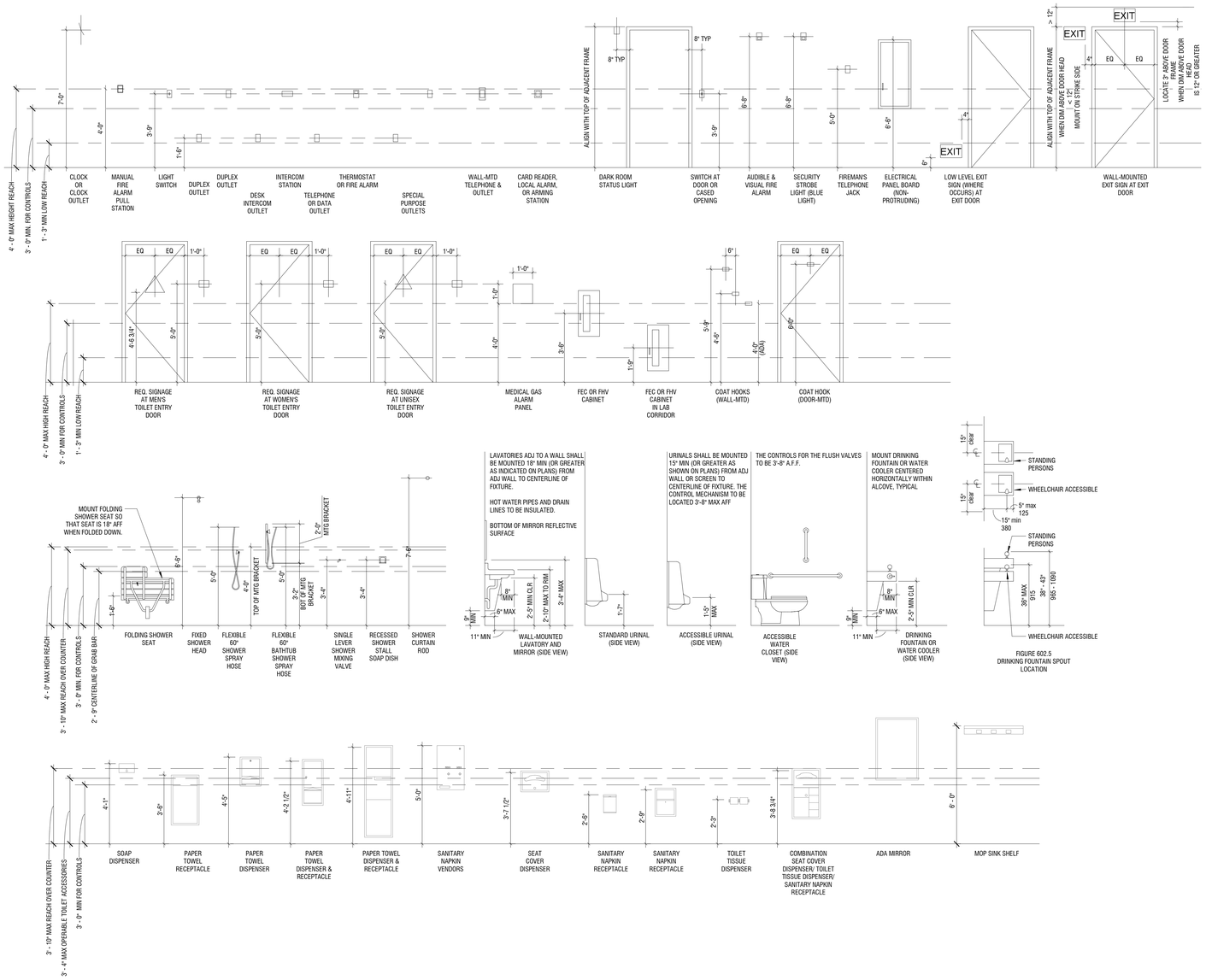

1 FIXTURE & SIGNAGE HEIGHTS

3/8" = 1'-0"

Babcock Design

Salt Lake City
52 Exchange Place
Salt Lake City, UT 84111
801.531.1144

Boise
800 W Main Street, Suite 940
Boise, ID 83702
208.424.7675

babcock**design**.com

Consultant

CITY OF ALPINE

ALPINE FIRE STATION #202

50 E 100 N ALPINE, UT 84004

Revisions

Num.	Description	Date

Project Number	25116
Original Issue	04.16.2026
Project Status	CONSTRUCTION DOCUMENTS

The information and content represented herein is considered by law the architect's instruments of service and are the property of Babcock Design. They are available for limited review and evaluation by clients, prospective clients, and authorities having jurisdiction. Any other use requires the prior written consent of this office. They are intended for use only for the project specified and are to be used for no other purpose or project including additions to or modification of the completed project. No part thereof may be copied, reproduced, photographed, modified, published, uploaded, transmitted, disclosed, sold, distributed to others in any way including in digital form, or otherwise used without the prior written consent of Babcock Design.

COPYRIGHT © 2025 BABCOCK DESIGN

Stamp

STATE OF UTAH
ROBERT B. COTTLE
138818
LICENSED ARCHITECT

Sheet Title

TYPICAL MOUNTING HEIGHTS

Sheet Number

G203

Original drawing is 30" x 42" Autodesk Docs://25116 - ALPINE FIRE STATION 202/25116 - Alpine Fire Station 202.rvt

Current as of 4/15/2026 9:44:11 PM

COMcheck-Web™

Compliance Certificate

Project Information

Energy Code:	2021 IECC
Project Title:	Alpine Fire Station 202
Location:	Alpine, Utah
Climate Zone:	5b
Project Type:	Addition
Project No:	95571
All Electric:	false
Is Renewable:	false
Has Battery:	false
Has Charger:	false
Has Heat Pump	false

Construction Site:	Owner/Agent:	Designer/Contractor:
50 East 100 North Alpine , Utah 84004	Shane Sorensen 20 North Main Street Alpine City Alpine , Utah 84004 ssorensen@alpineut.gov	Andrew Adams 3900 N Traverse Mountain Blvd #202 SIRQ Lehi , Utah 84043 aadams@sirq.com

Notes:

Building Area

Description	Floor Area
1-Convention Center (Convention Center) : Nonresidential	2844
2-Existing Apparatus Bay (Fire Station) : Nonresidential	4308
3-Fire Station (Addition) (Fire Station) : Nonresidential	5417

Envelope Compliance Certificate

Project Information

Energy Code:	2021 IECC
Project Title:	Alpine Fire Station 202
Location:	Alpine, Utah
Climate Zone:	5b
Project Type:	Addition
Vertical Glazing / Wall Area:	0.174

Construction Site:	Owner/Agent:	Designer/Contractor:
50 East 100 North Alpine , Utah 84004	Shane Sorensen 20 North Main Street Alpine City Alpine , Utah 84004 ssorensen@alpineut.gov	Andrew Adams 3900 N Traverse Mountain Blvd #202 SIRQ Lehi , Utah 84043 aadams@sirq.com

Envelope Assemblies

Assembly	Gross Area or Perimeter	Cavity R-Value	Cont. R-Value	Proposed U-Factor	Budget U-Factor
Roof:Roof 2, Insulation Entirely Above Deck, [Bldg. Use 3 - Fire Station (Addition)]	5417	---	30.00	0.032	0.032
Roof:Roof 1, Non-Wood Joist/Rafter/Truss, [Bldg. Use 2 - Existing Apparatus Bay]	4308	0.00	30.00	0.032	0.021
Roof:Roof, Insulation Entirely Above Deck, [Bldg. Use 1 - Convention Center]	2844	---	30.00	0.032	0.032
Floor:Floor 2, Unheated Slab-On-Grade, Vertical 2 ft., [Bldg. Use 3 - Fire Station (Addition)] (c)	321	---	10.00	0.540	0.520
Floor:Floor 1, Unheated Slab-On-Grade, [Bldg. Use 2 - Existing Apparatus Bay] (c)	266	---	---	0.730	0.520
Floor:Floor, Unheated Slab-On-Grade, [Bldg. Use 1 - Convention Center] (c)	244	---	---	0.730	0.520
NORTH					
Ext Wall:ADDITION - NORTH, Masonry, Normal Density, Furring: None, [Bldg. Use 3 - Fire Station (Addition)]	1088	---	10.00	0.071	0.090
Window:Window, Metal Frame with Thermal Break, Perf. Specs.: Product ID , SHGC 0.26, VT 0.45, [Bldg. Use 3 - Fire Station (Addition)] (b)	254	---	---	0.240	0.360
Door:Door 1, Perf. Specs.: Product ID , SHGC 0.24, PF 0.07, VT 0.45, [Bldg. Use 3 - Fire Station (Addition)] (b)	122	---	---	0.380	0.630
Ext Wall:EXIST - NORTH, Masonry, Normal Density, Furring: None, [Bldg. Use 2 - Existing Apparatus Bay]	1277	---	10.00	0.071	0.090
Window:Window 5, Metal Frame, Perf. Specs.: Product ID , SHGC 0.24, PF 0.08, VT 0.45, [Bldg. Use 2 - Existing Apparatus Bay] (b)	84	---	---	0.380	0.360
Door:Door 3, Insulated Metal, Garage door < 14% glazing, [Bldg. Use 2 - Existing Apparatus Bay]	504	---	---	0.380	0.310
Ext Wall:COMM - NORTH, Wood Frame, Any Spacing, [Bldg. Use 1 - Convention Center]	452	19.00	10.00	0.038	0.051
Window:COMM - EXISTING ENTRY NORTH, Metal Frame, Perf. Specs.: Product ID , SHGC 0.24, PF 0.06, VT 0.45, [Bldg. Use 1 - Convention Center] (b)	55	---	---	0.380	0.360
Window:COMM - STOREFRONT NORTH, Metal Frame with Thermal Break, Perf. Specs.: Product ID , SHGC 0.26, PF 0.06, VT 0.45, [Bldg. Use 1 - Convention Center] (b)	42	---	---	0.240	0.360

Assembly	Gross Area or Perimeter	Cavity R-Value	Cont. R-Value	Proposed U-Factor	Budget U-Factor
EAST					
Ext Wall:ADDITION (MASONRY) - EAST, Masonry, Normal Density, Furring: None, [Bldg. Use 3 - Fire Station (Addition)]	1231	---	10.00	0.071	0.090
Window:Window 1, Metal Frame with Thermal Break, Perf. Specs.: Product ID , SHGC 0.26, PF 0.06, VT 0.45, [Bldg. Use 3 - Fire Station (Addition)] (b)	80	---	---	0.240	0.360
Door:Door 2, Insulated Metal, Swinging, [Bldg. Use 3 - Fire Station (Addition)]	24	---	---	0.380	0.370
Ext Wall:ADDITION (STUD) - EAST, Wood Frame, Any Spacing, [Bldg. Use 3 - Fire Station (Addition)]	220	19.00	10.00	0.038	0.051
Window:Window 2, Metal Frame with Thermal Break, Perf. Specs.: Product ID , SHGC 0.26, PF 0.06, VT 0.45, [Bldg. Use 3 - Fire Station (Addition)] (b)	128	---	---	0.240	0.360
Ext Wall:COMM - EAST, Wood Frame, Any Spacing, [Bldg. Use 1 - Convention Center]	136	19.00	10.00	0.038	0.051
SOUTH					
Ext Wall:ADDITION (MASONRY) - SOUTH, Masonry, Normal Density, Furring: Wood, [Bldg. Use 3 - Fire Station (Addition)]	915	13.00	10.00	0.040	0.090
Window:Window 3, Metal Frame with Thermal Break, Perf. Specs.: Product ID , SHGC 0.26, PF 0.09, VT 0.45, [Bldg. Use 3 - Fire Station (Addition)] (b)	120	---	---	0.240	0.450
Ext Wall:ADDITION (STUD) - SOUTH, Wood Frame, Any Spacing, [Bldg. Use 3 - Fire Station (Addition)]	200	19.00	10.00	0.038	0.051
Window:Window 4, Metal Frame with Thermal Break, Perf. Specs.: Product ID , SHGC 0.26, PF 0.06, VT 0.45, [Bldg. Use 3 - Fire Station (Addition)] (b)	133	---	---	0.240	0.360
Ext Wall:EXIST - SOUTH, Masonry, Normal Density, Furring: None, [Bldg. Use 2 - Existing Apparatus Bay]	1277	---	10.00	0.071	0.090
Window:Window 5 1, Metal Frame, Perf. Specs.: Product ID , SHGC 0.24, PF 0.08, VT 0.45, [Bldg. Use 2 - Existing Apparatus Bay] (b)	84	---	---	0.380	0.360
Door:Door 3 1, Insulated Metal, Garage door < 14% glazing, [Bldg. Use 2 - Existing Apparatus Bay]	504	---	---	0.380	0.310
Door:Door 4, Uninsulated Double-Layer Metal, Swinging, [Bldg. Use 2 - Existing Apparatus Bay]	24	---	---	0.380	0.370
Ext Wall:COMM - SOUTH, Wood Frame, Any Spacing, [Bldg. Use 1 - Convention Center]	452	19.00	10.00	0.038	0.051
Window:COMM SOUTH WINDOWS, Metal Frame with Thermal Break, Perf. Specs.: Product ID , SHGC 0.26, PF 0.06, VT 0.45, [Bldg. Use 1 - Convention Center] (b)	148	---	---	0.240	0.360
Door:COMM SOUTH DOOR, Perf. Specs.: Product ID , SHGC 0.24, PF 0.06, VT 0.45, [Bldg. Use 1 - Convention Center] (b)	24	---	---	0.380	0.630
WEST					
Ext Wall:ADDITION (MASONRY) - WEST, Masonry, Normal Density, Furring: Wood, [Bldg. Use 3 - Fire Station (Addition)]	141	19.00	10.00	0.035	0.090
Ext Wall:EXIST - WEST, Masonry, Normal Density, Furring: None, [Bldg. Use 2 - Existing Apparatus Bay]	211	---	10.00	0.071	0.090
Door:Door 5, Uninsulated Double-Layer Metal, Swinging, [Bldg. Use 2 - Existing Apparatus Bay]	24	---	---	0.380	0.370
Ext Wall:COMM - WEST, Wood Frame, Any Spacing, [Bldg. Use 1 - Convention Center]	849	19.00	10.00	0.038	0.051
Window:COMM WEST - NEW, Metal Frame with Thermal Break, Perf. Specs.: Product ID , SHGC 0.26, PF 0.06, VT 0.45, [Bldg. Use 1 - Convention Center] (b)	180	---	---	0.240	0.360
Window:COMM WEST - EXIST, Metal Frame, Perf. Specs.: Product ID , SHGC 0.24, PF 0.06, VT 0.45, [Bldg. Use 1 - Convention Center] (b)	18	---	---	0.380	0.360

(a) Budget U-factors are used for software baseline calculations ONLY, and are not code requirements.
(b) Fenestration product performance must be certified in accordance with NFRC and requires supporting documentation.
(c) Slab-On-Grade proposed and budget U-factors shown in table are F-factors.

Envelope PASSES: Design 3% better than code

Envelope Compliance Statement

Compliance Statement: The proposed envelope design represented in this document is consistent with the building plans, specifications, and other calculations submitted with this permit application. The proposed envelope systems have been designed to meet the 2021 IECC requirements in COMcheckWeb and to comply with any applicable mandatory requirements listed in the Inspection Checklist.

Name - Title	Signature	Date
Chad Littlewood - Senior Associate		04/11/2026

Babcock Design

Salt Lake City
52 Exchange Place
Salt Lake City, UT 84111
801.531.1144

Boise
800 W Main Street, Suite 940
Boise, ID 83702
208.424.7675

babcockdesign.com

Consultant

CITY OF ALPINE

ALPINE FIRE STATION #202

50 E 100 N ALPINE, UT 84004

Revisions

Num.	Description	Date

Project Number	25116
Original Issue	04.16.2026
Project Status	CONSTRUCTION DOCUMENTS

The information and content represented herein is considered by law the architect's instruments of service and are the property of Babcock Design. They are available for limited review and evaluation by clients, consultants, contractors, government agencies, vendors, and office personnel only in accordance with this notice. They are intended for use only for the project specified and are to be used for no other purpose or project including additions to or modification of the completed project. No part thereof may be copied, reproduced, photographed, modified, published, uploaded, transmitted, disclosed, sold, distributed to others in any way including in digital form, or otherwise used without the prior written consent of Babcock Design.

COPYRIGHT © 2025 BABCOCK DESIGN

Stamp

STATE OF UTAH
ROBERT B. COTTLE
136818
LICENSED ARCHITECT

Sheet Title

ENERGY COMPLIANCE REPORTS

Sheet Number

G301

811 Know what's below. Call before you dig.

CALL BLUESTAKES @ 811 AT LEAST 48 HOURS PRIOR TO THE COMMENCEMENT OF ANY CONSTRUCTION.

BENCHMARK

SOUTHEAST CORNER OF SECTION 24,
TOWNSHIP 4 SOUTH, RANGE 1 EAST
SALT LAKE BASE AND MERIDIAN

ELEV = 4950.71'

GENERAL NOTES

1. ALL CONSTRUCTION MUST STRICTLY FOLLOW THE STANDARDS AND SPECIFICATIONS SET FORTH BY: THE DESIGN ENGINEER, LOCAL AGENCY JURISDICTION, APWA (CURRENT EDITION), AND THE MANUAL ON UNIFORM TRAFFIC CONTROL DEVICES (M.U.T.C.D.). THE ORDER LISTED ABOVE IS ARRANGED BY SENIORITY. THE LATEST EDITION OF ALL STANDARDS AND SPECIFICATIONS MUST BE ADHERED TO. IF A CONSTRUCTION PRACTICE IS NOT SPECIFIED BY ANY OF THE LISTED SOURCES, CONTRACTOR MUST CONTACT DESIGN ENGINEER FOR DIRECTION.
2. CONTRACTOR TO STRICTLY FOLLOW THE MOST CURRENT COPY OF THE SOILS REPORT FOR THIS PROJECT. ALL GRADING INCLUDING BUT NOT LIMITED TO CUT, FILL, COMPACTION, ASPHALT SECTION, SUBBASE, TRENCH EXCAVATION/BACKFILL, SITE GRUBBING, AND FOOTINGS MUST BE COORDINATED DIRECTLY WITH SOILS REPORT.
3. CONTRACTOR MUST VERIFY ALL EXISTING CONDITIONS BEFORE BIDDING, AND BRING UP ANY QUESTIONS BEFORE SUBMITTING BID.
4. CONTRACTOR SHALL PROVIDE A CONSTRUCTION SCHEDULE IN ACCORDANCE WITH THE CITY, STATE, OR COUNTY REGULATIONS FOR WORKING IN THE PUBLIC WAY.
5. CONTRACTOR SHALL BE RESPONSIBLE FOR DUST CONTROL ACCORDING TO GOVERNING AGENCY STANDARDS. WET DOWN DRY MATERIALS AND RUBBISH TO PREVENT BLOWING.
6. CONTRACTOR SHALL BE RESPONSIBLE FOR ANY DAMAGE TO ADJACENT SURFACE IMPROVEMENTS.
7. CONTRACTOR SHALL BE RESPONSIBLE FOR CORRECTING ANY SETTLEMENT OF OR DAMAGE TO EXISTING UTILITIES.
8. THE CONTRACTOR IS RESPONSIBLE TO FURNISH ALL MATERIALS TO COMPLETE THE PROJECT.
9. ALL EXPOSED SURFACES WILL HAVE A TEXTURED FINISH, RUBBED, OR BROOMED. ANY "PLASTERING" OF NEW CONCRETE WILL BE DONE WHILE IT IS STILL "GREEN".
10. PRIOR TO STARTING CONSTRUCTION, THE CONTRACTOR SHALL BE RESPONSIBLE FOR VERIFYING THAT ALL REQUIRED PERMITS AND APPROVALS HAVE BEEN OBTAINED. NO CONSTRUCTION OR FABRICATION SHALL BEGIN UNTIL THE CONTRACTOR HAS RECEIVED AND THOROUGHLY REVIEWED ALL PLANS AND OTHER DOCUMENTS APPROVED BY ALL OF THE PERMITTING AUTHORITIES.
11. THE LOCATIONS OF UNDERGROUND FACILITIES SHOWN ON THESE PLANS ARE BASED ON FIELD SURVEYS AND LOCAL UTILITY COMPANY RECORDS. IT SHALL BE THE CONTRACTOR'S FULL RESPONSIBILITY TO CONTACT THE VARIOUS UTILITY COMPANIES TO LOCATE THEIR FACILITIES PRIOR TO PROCEEDING WITH CONSTRUCTION. NO ADDITIONAL COMPENSATION SHALL BE PAID TO THE CONTRACTOR FOR DAMAGE AND REPAIR TO THESE FACILITIES CAUSED BY HIS WORK FORCE. CONTRACTOR SHALL START INSTALLATION AT LOW POINT OF ALL NEW GRAVITY UTILITY LINES.
12. ALL DIMENSIONS, GRADES, AND UTILITY DESIGN SHOWN ON THE PLANS SHALL BE VERIFIED BY THE CONTRACTOR PRIOR TO CONSTRUCTION. CONTRACTOR SHALL NOTIFY THE ENGINEER IF ANY DISCREPANCIES EXIST, PRIOR TO PROCEEDING WITH CONSTRUCTION FOR NECESSARY PLAN OR GRADE CHANGES. NO EXTRA COMPENSATION SHALL BE PAID TO THE CONTRACTOR FOR WORK HAVING TO BE REDONE DUE TO THE DIMENSIONS OR GRADES SHOWN INCORRECTLY ON THESE PLANS, IF SUCH NOTIFICATION HAS NOT BEEN GIVEN.
13. NO CHANGE IN DESIGN LOCATION OR GRADE WILL BE MADE BY THE CONTRACTOR WITHOUT THE WRITTEN APPROVAL OF THE PROJECT ENGINEER.
14. NATURAL VEGETATION AND SOIL COVER SHALL NOT BE DISTURBED PRIOR TO ACTUAL CONSTRUCTION OF A REQUIRED FACILITY OR IMPROVEMENT. MASS CLEARING OF THE SITE IN ANTICIPATION OF CONSTRUCTION SHALL BE AVOIDED.
15. CONTRACTOR SHALL BE RESPONSIBLE FOR FURNISHING, MAINTAINING, OR RESTORING ALL MONUMENTS AND MONUMENT REFERENCE MARKS WITHIN THE PROJECT SITE. CONTACT THE CITY OR COUNTY SURVEYOR FOR MONUMENT LOCATIONS AND CONSTRUCTION DETAILS.
16. EXISTING UTILITY INFORMATION SHOWN IS FOR INFORMATIONAL PURPOSES ONLY. IT IS DERIVED FROM ON-SITE SURVEY AND/OR UTILITY MAPPING PROVIDED TO THE ENGINEER, AND THEREFORE UTILITIES MAY NOT BE LOCATED CORRECTLY, EITHER HORIZONTALLY OR VERTICALLY, AND MAY NOT BE ALL INCLUSIVE. CONTRACTOR IS REQUIRED TO FOLLOW THE PROCEDURE OUTLINED BELOW:
    - 16.1. CONTRACTOR IS REQUIRED TO LOCATE AND POTHOLE ALL EXISTING UTILITY LINES (BOTH HORIZONTALLY AND VERTICALLY) THAT AFFECT THE PROJECT CONSTRUCTION, EITHER ON-SITE OR OFF-SITE, AND DETERMINE IF THERE ARE ANY CONFLICTS WITH THE DESIGN OF THE SITE AS SHOWN ON THE APPROVED PLANS PRIOR TO ANY CONSTRUCTION. IF IT IS DETERMINED THAT CONFLICTS EXIST BETWEEN EXISTING UTILITIES AND DESIGN UTILITIES (OR ANOTHER ASPECT OF PROPOSED CONSTRUCTION) THE ENGINEER MUST BE NOTIFIED IMMEDIATELY TO CORRECT THE CONFLICTS BEFORE ANY WORK CAN BEGIN. IF THE CONTRACTOR FAILS TO FOLLOW THIS ABSOLUTE REQUIREMENT AND CONFLICTS ARISE DURING CONSTRUCTION THE CONTRACTOR WILL BEAR THE SOLE RESPONSIBILITY TO FIX THE CONFLICTS.
    - 16.2. CONTRACTOR IS REQUIRED TO VERIFY THAT PROPER COVER AND PROTECTION OF EXISTING UTILITY LINES IS MAINTAINED OR ATTAINED WITHIN THE DESIGN ONCE VERIFICATION OF THE EXISTING UTILITIES IS COMPLETED AS OUTLINED IN 16.1 ABOVE.
    - 16.3. IN ADDITION TO 16.1 AND 16.2 ABOVE THE CONTRACTOR WILL VERIFY DEPTHS OF UTILITIES IN THE FIELD BY "POTHOLING" A MINIMUM OF 300 FEET AHEAD OF PROPOSED PIPELINE CONSTRUCTION TO AVOID POTENTIAL CONFLICTS WITH DESIGNED PIPELINE ALIGNMENT AND GRADE AND EXISTING UTILITIES.
    - 16.4. IF A CONFLICT ARISES BETWEEN EXISTING UTILITIES AND DESIGN UTILITIES (OR ANOTHER ASPECT OF PROPOSED CONSTRUCTION) AS DETERMINED UNDER 16.1, 16.2 OR 16.3 THE CONTRACTOR WILL NOTIFY THE ENGINEER IMMEDIATELY TO RESOLVE THE CONFLICT.
    - 16.5. IF A CONFLICT ARISES BETWEEN EXISTING UTILITIES AND DESIGN UTILITIES (OR ANOTHER ASPECT OF PROPOSED CONSTRUCTION) RESULTING FROM THE CONTRACTOR'S NEGLIGENCE TO IDENTIFY AND/OR "POTHOLE" EXISTING UTILITIES AS REQUIRED IN 16.1, 16.2 AND 16.3 ABOVE, THE CONTRACTOR WILL BE REQUIRED TO RESOLVE THE CONFLICT WITHOUT ADDITIONAL COST OR CLAIM TO THE OWNER OR ENGINEER.
17. ANY AREA OUTSIDE THE LIMIT OF WORK THAT IS DISTURBED SHALL BE RESTORED TO ITS ORIGINAL CONDITION AT NO COST TO OWNER.
18. CONSULT ALL OF THE DRAWINGS AND SPECIFICATIONS FOR COORDINATION REQUIREMENTS BEFORE COMMENCING CONSTRUCTION.
19. AT ALL LOCATIONS WHERE EXISTING PAVEMENT ABUTS NEW CONSTRUCTION, THE EDGE OF THE EXISTING PAVEMENT SHALL BE SAWCUT TO A CLEAN, SMOOTH EDGE.
20. ALL CONSTRUCTION AND MATERIALS SHALL BE IN ACCORDANCE WITH THE MOST RECENT, ADOPTED EDITION OF ADA ACCESSIBILITY GUIDELINES.
21. CONTRACTOR SHALL, AT THE TIME OF BIDDING AND THROUGHOUT THE PERIOD OF THE CONTRACT, BE LICENSED IN THE STATE OF UTAH AND SHALL BE BONDABLE FOR AN AMOUNT REQUIRED BY THE OWNER.
22. CONTRACTOR SHALL BE RESPONSIBLE TO PROVIDE ALL WATER, POWER, SANITARY FACILITIES AND TELEPHONE SERVICES AS REQUIRED FOR THE CONTRACTOR'S USE DURING CONSTRUCTION.
23. CONTRACTOR SHALL BE RESPONSIBLE FOR ADEQUATELY SCHEDULING INSPECTION AND TESTING OF ALL FACILITIES CONSTRUCTED UNDER THIS CONTRACT. ALL TESTING SHALL CONFORM TO THE REGULATORY AGENCY'S STANDARD SPECIFICATIONS. ALL RE-TESTING AND/OR RE-INSPECTION SHALL BE PAID FOR BY THE CONTRACTOR.
24. IF EXISTING IMPROVEMENTS NEED TO BE DISTURBED AND/OR REMOVED FOR THE PROPER PLACEMENT OF IMPROVEMENTS TO BE CONSTRUCTED BY THESE PLANS, THE CONTRACTOR SHALL BE RESPONSIBLE FOR PROTECTING EXISTING IMPROVEMENTS FROM DAMAGE. COST OF REPLACING OR REPAIRING EXISTING IMPROVEMENTS SHALL BE INCLUDED IN THE UNIT PRICE BID FOR ITEMS REQUIRING REMOVAL AND/OR REPLACEMENT. THERE WILL BE NO EXTRA COST DUE TO THE CONTRACTOR FOR REPLACING OR REPAIRING EXISTING IMPROVEMENTS.
25. WHENEVER EXISTING FACILITIES ARE REMOVED, DAMAGED, BROKEN, OR CUT IN THE INSTALLATION OF THE WORK COVERED BY THESE PLANS OR SPECIFICATIONS, SAID FACILITIES SHALL BE REPLACED AT THE CONTRACTOR'S EXPENSE WITH MATERIALS EQUAL TO OR BETTER THAN THE MATERIALS USED IN THE ORIGINAL EXISTING FACILITIES. THE FINISHED PRODUCT SHALL BE SUBJECT TO THE APPROVAL OF THE OWNER, THE ENGINEER, AND THE RESPECTIVE REGULATORY AGENCY.
26. CONTRACTOR SHALL MAINTAIN A NEATLY MARKED SET OF FULL-SIZE RECORD DRAWINGS SHOWING THE FINAL LOCATION AND LAYOUT OF ALL STRUCTURES AND OTHER FACILITIES. RECORD DRAWINGS SHALL REFLECT CHANGE ORDERS, ACCOMMODATIONS, AND ADJUSTMENTS TO ALL IMPROVEMENTS CONSTRUCTED. WHERE NECESSARY, SUPPLEMENTAL DRAWINGS SHALL BE PREPARED AND SUBMITTED BY THE CONTRACTOR. PRIOR TO ACCEPTANCE OF THE PROJECT, THE CONTRACTOR SHALL DELIVER TO THE ENGINEER ONE SET OF NEATLY MARKED RECORD DRAWINGS SHOWING THE INFORMATION REQUIRED ABOVE. RECORD DRAWINGS SHALL BE REVIEWED AND THE COMPLETE RECORD DRAWING SET SHALL BE CURRENT WITH ALL CHANGES AND DEVIATIONS REDLINED AS A PRECONDITION TO THE FINAL PROGRESS PAYMENT APPROVAL AND/OR FINAL ACCEPTANCE.
27. WHERE THE PLANS OR SPECIFICATIONS DESCRIBE PORTIONS OF THE WORK IN GENERAL TERMS BUT NOT IN COMPLETE DETAIL, IT IS UNDERSTOOD THAT ONLY THE BEST GENERAL PRACTICE IS TO PREVAIL AND THAT ONLY MATERIALS AND WORKMANSHIP OF THE FIRST QUALITY ARE TO BE USED.
28. ALL EXISTING GATES AND FENCES TO REMAIN UNLESS OTHERWISE NOTED ON PLANS. PROTECT ALL GATES AND FENCES FROM DAMAGE.
29. ALL EXISTING TREES ARE TO REMAIN UNLESS OTHERWISE NOTED ON PLANS. PROTECT ALL TREES FROM DAMAGE.
30. ASPHALT MIX DESIGN MUST BE SUBMITTED AND APPROVED BY THE GOVERNING AGENCY PRIOR TO THE PLACEMENT.
31. CONTRACTORS ARE RESPONSIBLE FOR ALL OSHA REQUIREMENTS ON THE PROJECT SITE.
32. A UPDES (UTAH POLLUTANT DISCHARGE ELIMINATION SYSTEM) PERMIT IS REQUIRED FOR ALL CONSTRUCTION ACTIVITIES 1 ACRE OR MORE AS WELL AS A STORM WATER POLLUTION PREVENTION PLAN.

UTILITY NOTES

1. ALL CONSTRUCTION AND MATERIALS SHALL BE IN ACCORDANCE WITH THESE CONTRACT DOCUMENTS, CITY AND STATE REQUIREMENTS AND THE MOST RECENT EDITIONS OF THE FOLLOWING: THE INTERNATIONAL PLUMBING CODE, UTAH DRINKING WATER REGULATIONS, APWA MANUAL OF STANDARD PLANS AND SPECIFICATIONS. THE CONTRACTOR IS REQUIRED TO ADHERE TO ALL OF THE ABOVE-MENTIONED DOCUMENTS UNLESS OTHERWISE NOTED AND APPROVED BY THE ENGINEER.
2. CONTRACTOR SHALL COORDINATE LOCATION OF NEW "DRY UTILITIES" WITH THE APPROPRIATE UTILITY COMPANY, INCLUDING BUT NOT LIMITED TO: TELEPHONE & INTERNET SERVICE, GAS SERVICE, CABLE, AND POWER.
3. EXISTING UTILITIES HAVE BEEN SHOWN ON THE PLANS BASED ON ON-SITE SURVEY. PRIOR TO COMMENCING ANY WORK, IT SHALL BE THE CONTRACTOR'S RESPONSIBILITY TO HAVE EACH UTILITY COMPANY LOCATE, IN THE FIELD, THEIR MAIN AND SERVICE LINES. THE CONTRACTOR SHALL NOTIFY BLUE STAKES AT 1-800-662-4111 48 HOURS IN ADVANCE OF PERFORMING ANY EXCAVATION WORK. THE CONTRACTOR SHALL RECORD THE BLUE STAKES ORDER NUMBER AND FURNISH ORDER NUMBER TO OWNER AND ENGINEER PRIOR TO ANY EXCAVATION. IT WILL BE THE CONTRACTOR'S SOLE RESPONSIBILITY TO DIRECTLY CONTACT ANY OTHER UTILITY COMPANIES THAT ARE NOT MEMBERS OF BLUE STAKES. IT SHALL BE THE CONTRACTOR'S SOLE RESPONSIBILITY TO PROTECT ALL EXISTING UTILITIES SO THAT NO DAMAGE RESULTS TO THEM DURING THE PERFORMANCE OF THIS CONTRACT. ANY REPAIRS NECESSARY TO DAMAGED UTILITIES SHALL BE PAID FOR BY THE CONTRACTOR. THE CONTRACTOR SHALL BE REQUIRED TO COOPERATE WITH OTHER CONTRACTORS AND UTILITY COMPANIES INSTALLING NEW STRUCTURES, UTILITIES AND SERVICE TO THE PROJECT.
4. CARE SHOULD BE TAKEN IN ALL EXCAVATIONS DUE TO POSSIBLE EXISTENCE OF UNRECORDED UTILITY LINES. EXCAVATION REQUIRED WITHIN PROXIMITY OF EXISTING UTILITY LINES SHALL BE DONE BY HAND. CONTRACTOR SHALL REPAIR ANY DAMAGE TO EXISTING UTILITY LINES OR STRUCTURES INCURRED DURING CONSTRUCTION OPERATIONS AT CONTRACTOR'S EXPENSE.
5. TRENCH BACKFILL MATERIAL AND COMPACTION TESTS ARE TO BE TAKEN PER APWA STANDARD SPECIFICATIONS (CURRENT EDITION), SECTION 33 05 20 - BACKFILLING TRENCHES, OR AS REQUIRED BY THE GEOTECHNICAL REPORT IF NATIVE MATERIALS ARE USED. NO NATIVE MATERIALS ARE ALLOWED IN THE PIPE ZONE. THE MAXIMUM LIFT FOR BACKFILLING EXCAVATIONS IS DETERMINED BY THE GEOTECHNICAL RECOMMENDATIONS.
6. THE CONTRACTOR IS SOLELY RESPONSIBLE FOR CONFORMING TO LOCAL AND FEDERAL CODES GOVERNING SHORING AND BRACING OF EXCAVATIONS AND TRENCHES AND FOR THE PROTECTION OF WORKERS.
7. THE CONTRACTOR IS REQUIRED TO KEEP ALL CONSTRUCTION ACTIVITIES WITHIN THE APPROVED PROJECT LIMITS. THIS INCLUDES, BUT IS NOT LIMITED TO VEHICLE AND EQUIPMENT STAGING, MATERIAL STORAGE AND LIMITS OF TRENCH EXCAVATION. IT IS THE CONTRACTOR'S RESPONSIBILITY TO OBTAIN PERMISSION AND/OR EASEMENTS FROM THE APPROPRIATE GOVERNING ENTITY AND/OR INDIVIDUAL PROPERTY OWNER(S) FOR WORK OR STAGING OUTSIDE OF THE PROJECT LIMITS.
8. THE CONTRACTOR IS RESPONSIBLE FOR REPAIRING ANY DAMAGE, CAUSED BY ANY CONDITION INCLUDING SETTLEMENT, TO EXISTING UTILITIES FROM WORK PERFORMED AT OR NEAR EXISTING UTILITIES. THE CONTRACTOR SHALL TAKE ALL MEASURES NECESSARY TO PROTECT ALL EXISTING PUBLIC AND PRIVATE ROADWAY AND UTILITY FACILITIES. DAMAGE TO EXISTING FACILITIES CAUSED BY THE CONTRACTOR MUST BE REPAIRED BY THE CONTRACTOR AT HIS/HER EXPENSE TO THE SATISFACTION OF THE OWNER OF SAID FACILITIES.
9. ALL WATER LINE AND SEWER LINE INSTALLATION AND TESTING TO BE IN ACCORDANCE WITH LOCAL GOVERNING AGENCY'S STANDARDS AND SPECIFICATIONS.
10. ALL MANHOLES, HYDRANTS, VALVES, CLEANOUT BOXES, CATCH BASINS, METERS, ETC. MUST BE RAISED OR LOWERED TO FINAL GRADE PER APWA (CURRENT EDITION) STANDARDS AND INSPECTOR REQUIREMENTS. CONCRETE COLLARS MUST BE CONSTRUCTED ON ALL MANHOLES, CLEANOUT BOXES, CATCH BASINS, AND VALVES PER APWA STANDARDS. ALL MANHOLE, CATCH BASIN, OR CLEANOUT BOX CONNECTIONS MUST BE MADE WITH THE PIPE CUT FLUSH WITH THE INSIDE OF THE BOX AND GROUTED OR SEALED.
11. CONTRACTOR SHALL NOT ALLOW ANY GROUNDWATER OR DEBRIS TO ENTER THE NEW OR EXISTING PIPE DURING CONSTRUCTION.
12. SILT AND DEBRIS ARE TO BE CLEANED OUT OF ALL STORM DRAIN BOXES. CATCH BASINS ARE TO BE MAINTAINED IN A CLEANED CONDITION AS NEEDED UNTIL AFTER THE FINAL BOND RELEASE INSPECTION.
13. CONTRACTOR SHALL CLEAN ASPHALT, TAR OR OTHER ADHESIVES OFF OF ALL MANHOLE LIDS AND INLET GRATES TO ALLOW ACCESS.
14. EACH TRENCH SHALL BE EXCAVATED SO THAT THE PIPE CAN BE LAID TO THE ALIGNMENT AND GRADE AS REQUIRED. THE TRENCH WALL SHALL BE SO BRACED THAT THE WORKMEN MAY WORK SAFELY AND EFFICIENTLY. ALL TRENCHES SHALL BE DRAINED SO THE PIPE LAYING MAY TAKE PLACE IN DEWATERED CONDITIONS.
15. CONTRACTOR SHALL PROVIDE AND MAINTAIN AT ALL TIMES AMPLE MEANS AND DEVICES WITH WHICH TO REMOVE PROMPTLY AND TO PROPERLY DISPOSE OF ALL WATER ENTERING THE TRENCH EXCAVATION.
16. ALL SEWER LINES AND SEWER SERVICES SHALL HAVE A MINIMUM SEPARATION OF 10 FEET, EDGE TO EDGE, FROM THE WATER LINES. IF A 10 FOOT SEPARATION CAN NOT BE MAINTAINED, CONSTRUCT PER GOVERNING AGENCY'S MINIMUM SEPARATION STANDARDS.
17. CONTRACTOR SHALL INSTALL THRUST BLOCKING AT ALL WATERLINE ANGLE POINTS AND TEES.
18. ALL UNDERGROUND UTILITIES SHALL BE IN PLACE PRIOR TO INSTALLATION OF CURB, GUTTER, SIDEWALK AND STREET PAVING.
19. CONTRACTOR SHALL INSTALL MAGNETIC LOCATING TAPE CONTINUOUSLY OVER ALL NONMETALLIC PIPE.

TRAFFIC CONTROL AND SAFETY NOTES

1. TRAFFIC CONTROL AND STRIPING TO CONFORM TO THE CURRENT MANUAL OF UNIFORM TRAFFIC CONTROL DEVICES (M.U.T.C.D.).
2. BARRICADING AND DETOURING SHALL BE IN CONFORMANCE WITH THE REQUIREMENTS OF THE CURRENT M.U.T.C.D.
3. NO STREET SHALL BE CLOSED TO TRAFFIC WITHOUT WRITTEN PERMISSION FROM THE APPROPRIATE AGENCY, EXCEPT WHEN DIRECTED BY LAW ENFORCEMENT OR FIRE OFFICIALS.
4. THE CONTRACTOR SHALL MAKE EVERY EFFORT TO PROVIDE FOR SMOOTH TRAFFIC FLOW AND SAFETY. ACCESS SHALL BE MAINTAINED FOR ALL PROPERTIES ADJACENT TO THE WORK.
5. DETOURING OPERATIONS FOR A PERIOD OF SIX CONSECUTIVE CALENDAR DAYS, OR MORE, REQUIRE THE INSTALLATION OF TEMPORARY STREET STRIPING AND REMOVAL OF INTERFERING STRIPING BY SANDBLASTING. THE DETOURING STRIPING PLAN OR CONSTRUCTION TRAFFIC CONTROL PLAN MUST BE SUBMITTED TO THE GOVERNING AGENCY FOR REVIEW AND APPROVAL.
6. ALL TRAFFIC CONTROL DEVICES SHALL BE RESTORED TO THEIR ORIGINAL CONDITION AT THE END OF THE WORK TO THE SATISFACTION OF THE GOVERNING AGENCY.
7. TRAFFIC CONTROL DEVICES (TCDs) SHALL REMAIN VISIBLE AND OPERATIONAL AT ALL TIMES.
8. ALL PERMANENT TRAFFIC CONTROL DEVICES CALLED FOR HEREON SHALL BE IN PLACE AND IN FINAL POSITION PRIOR TO ALLOWING ANY PUBLIC TRAFFIC ONTO THE PORTIONS OF THE ROAD(S) BEING IMPROVED HEREUNDER, REGARDLESS OF THE STATUS OF COMPLETION OF PAVING OR OTHER OFF-SITE IMPROVEMENTS CALLED FOR BY THESE PLANS.
9. THE CONTRACTOR SHALL PROVIDE BARRICADES, SIGNS, FLASHERS, OTHER EQUIPMENT AND FLAG PERSONS NECESSARY TO INSURE THE SAFETY OF WORKERS AND VISITORS.
10. THE CONTRACTOR SHALL BE RESPONSIBLE FOR NOTIFYING UTAH TRANSIT AUTHORITY (UTA) IF THE CONSTRUCTION INTERRUPTS OR RELOCATES A BUS STOP OR HAS AN ADVERSE EFFECT ON BUS SERVICE ON THAT STREET TO ARRANGE FOR TEMPORARY RELOCATION OF STOP.

DEMOLITION NOTES

1. EXISTING UTILITY INFORMATION SHOWN IS FOR INFORMATIONAL PURPOSES ONLY. IT IS DERIVED FROM ON-SITE SURVEY AND MAY NOT BE LOCATED CORRECTLY AND IS NOT ALL INCLUSIVE. CONTRACTOR SHALL FIELD LOCATE ALL UTILITIES WITHIN THE PROJECT LIMITS BEFORE BEGINNING DEMOLITION/CONSTRUCTION.
2. THERE MAY BE BURIED UTILITIES WITHIN THE LIMITS OF DISTURBANCE THAT ARE NOT SHOWN ON THE PLANS DUE TO LACK OF MAPPING OR RECORD INFORMATION. CONTRACTOR SHALL NOTIFY THE ENGINEER WHEN UNEXPECTED UTILITIES ARE DISCOVERED.
3. THE CONTRACTOR SHALL BE FULLY RESPONSIBLE FOR LOCATING AND PROTECTING FROM DAMAGE ALL EXISTING UTILITIES AND IMPROVEMENTS WHETHER OR NOT SHOWN ON THESE PLANS. THE FACILITIES AND IMPROVEMENTS ARE BELIEVED TO BE CORRECTLY SHOWN BUT THE CONTRACTOR IS REQUIRED TO SATISFY HIMSELF AS TO THE COMPLETENESS AND ACCURACY OF THE LOCATIONS. ANY CONTRACTOR PERFORMING WORK ON THIS PROJECT SHALL FAMILIARIZE HIMSELF WITH THE SITE AND SHALL BE HELD SOLELY RESPONSIBLE FOR ANY DAMAGE TO EXISTING FACILITIES RESULTING DIRECTLY, OR INDIRECTLY, FROM HIS OPERATIONS, WHETHER OR NOT SAID FACILITIES ARE SHOWN ON THESE PLANS.

GRADING AND DRAINAGE NOTES

1. SITE GRADING SHALL BE PERFORMED IN ACCORDANCE WITH THESE PLANS AND SPECIFICATIONS AND THE RECOMMENDATIONS SET FORTH IN THE GEOTECHNICAL REPORT AND ALL RELATED ADDENDUMS.
2. THE CONTRACTOR SHALL STRIP AND CLEAR THE TOPSOIL, MAJOR ROOTS AND ORGANIC MATERIAL FROM ALL PROPOSED BUILDING AND PAVEMENT AREAS PRIOR TO SITE GRADING. (THE TOPSOIL MAY BE STOCKPILED FOR LATER USE IN LANDSCAPED AREAS.)
3. THE CONTRACTOR SHALL REMOVE ALL ORGANIC MATERIAL AND OTHER DELETERIOUS MATERIALS PRIOR TO PLACING GRADING FILL OR BASE COURSE. THE AREA SHOULD BE PROOF-ROLLED TO IDENTIFY ANY SOFT AREAS. WHERE SOFT AREAS ARE ENCOUNTERED, THE CONTRACTOR SHALL REMOVE THE SOIL AND REPLACE WITH COMPACTED FILL.
4. ALL DEBRIS PILES AND BERMS SHOULD BE REMOVED AND HAULED AWAY FROM SITE OR USED AS GENERAL FILL IN LANDSCAPED AREAS.
5. THE CONTRACTOR SHALL CONSTRUCT THE BUILDING PAD TO THESE DESIGN PLANS AS PART OF THE SITE GRADING CONTRACT, AND STRICTLY ADHERE TO THE SITE PREPARATION AND GRADING REQUIREMENTS OUTLINED IN THE GEOTECHNICAL REPORT.
6. THE CONTRACTOR SHALL GRADE THE PROJECT SITE TO PROVIDE A SMOOTH TRANSITION BETWEEN NEW AND EXISTING ASPHALT, CURB AND GUTTER, AND ADJOINING SITE IMPROVEMENTS.
7. THE CONTRACTOR SHALL BE RESPONSIBLE FOR DAMAGE AND DEBRIS ON ADJACENT STREETS WHEN EQUIPMENT IS TRAVELING THOSE STREETS.
8. THE CONTRACTOR SHALL BE FAMILIAR WITH ALL CONDITIONS AND RECOMMENDATIONS OUTLINED IN THE GEOTECHNICAL REPORT AND TAKE ALL NECESSARY PRECAUTIONS AND RECOMMENDED PROCEDURES TO ASSURE SOUND GRADING PRACTICES.
9. THE CONTRACTOR SHALL TAKE APPROPRIATE GRADING MEASURES TO DIRECT STORM SURFACE RUNOFF TOWARDS CATCH BASINS.
10. THE LOCATIONS OF UNDERGROUND FACILITIES SHOWN ON THESE PLANS ARE BASED ON ON-SITE SURVEY. IT SHALL BE THE CONTRACTORS' FULL RESPONSIBILITY TO CONTACT THE VARIOUS UTILITY COMPANIES TO LOCATE THEIR FACILITIES PRIOR TO PROCEEDING WITH CONSTRUCTION. NO ADDITIONAL COMPENSATION SHALL BE PAID TO THE CONTRACTOR FOR DAMAGE AND REPAIR TO THESE FACILITIES CAUSED BY HIS WORK FORCE.
11. IT SHALL BE THE RESPONSIBILITY OF THE CONTRACTOR TO PERFORM ALL NECESSARY CUTS AND FILLS WITHIN THE LIMITS OF THIS PROJECT AND THE RELATED OFF-SITE WORK, SO AS TO GENERATE THE DESIRED SUBGRADE, FINISH GRADES, AND SLOPES SHOWN.
12. THE CONTRACTOR IS WARNED THAT AN EARTHWORK BALANCE WAS NOT NECESSARILY THE INTENT OF THIS PROJECT. ANY ADDITIONAL MATERIAL REQUIRED OR LEFTOVER MATERIAL FOLLOWING EARTHWORK OPERATIONS BECOMES THE RESPONSIBILITY OF THE CONTRACTOR.
13. THE GRADING CONTRACTOR IS RESPONSIBLE TO COORDINATE WITH THE OWNER TO PROVIDE FOR THE REQUIREMENTS OF THE PROJECT STORM WATER POLLUTION PREVENTION PLAN (SWPPP) AND ASSOCIATED PERMIT. ALL CONTRACTOR ACTIVITIES 1 ACRE OR MORE IN SIZE ARE REQUIRED TO PROVIDE A STORM WATER POLLUTION PREVENTION PLAN.
14. ALL CUT AND FILL SLOPES SHALL BE PROTECTED UNTIL EFFECTIVE EROSION CONTROL HAS BEEN ESTABLISHED.
15. THE USE OF POTABLE WATER WITHOUT A SPECIAL PERMIT FOR BUILDING OR CONSTRUCTION PURPOSES INCLUDING CONSOLIDATION OF BACKFILL OR DUST CONTROL IS PROHIBITED. THE CONTRACTOR SHALL OBTAIN ALL NECESSARY PERMITS FOR CONSTRUCTION WATER FROM GOVERNING AGENCY.
16. THE CONTRACTOR SHALL MAINTAIN THE STREETS, SIDEWALKS, AND ALL OTHER PUBLIC RIGHT-OF-WAYS IN A CLEAN, SAFE AND USABLE CONDITION. ALL SPILLS OF SOIL, ROCK OR CONSTRUCTION DEBRIS SHALL BE PROMPTLY REMOVED FROM THE PUBLICLY-OWNED PROPERTY DURING CONSTRUCTION AND UPON COMPLETION OF THE PROJECT. ALL ADJACENT PROPERTY, PRIVATE OR PUBLIC, SHALL BE MAINTAINED IN A CLEAN, SAFE, AND USABLE CONDITION.

ABBREVIATIONS

APWA	AMERICAN PUBLIC WORKS ASSOCIATION
AR	ACCESSIBLE ROUTE
ASTM	AMERICAN SOCIETY FOR TESTING AND MATERIALS
AWWA	AMERICAN WATER WORKS ASSOCIATION
BOS	BOTTOM OF STEP
BVC	BEGIN VERTICAL CURVE
C	CURVE
CB	CATCH BASIN
CF	CURB FACE OR CUBIC FEET
CL	CENTER LINE
CO	CLEAN OUT
COMM	COMMUNICATION
CONC	CONCRETE
CONT	CONTINUOUS
DIA	DIAMETER
DIP	DUCTILE IRON PIPE
ELEC	ELECTRICAL
ELEV	ELEVATION
EOA	EDGE OF ASPHALT
EVC	END OF VERTICAL CURVE
EW	EACH WAY
EXIST	EXISTING
FF	FINISH FLOOR
FG	FINISH GRADE
FH	FIRE HYDRANT
FL	FLOW LINE OR FLANGE
GB	GRADE BREAK
GF	GARAGE FLOOR
GV	GATE VALVE
HC	HANDICAP
HP	HIGH POINT
IRR	IRRIGATION
K	RATE OF VERTICAL CURVATURE
LD	LAND DRAIN
LF	LINEAR FEET
LP	LOW POINT
MEX	MATCH EXISTING
MH	MANHOLE
MJ	MECHANICAL JOINT
NG	NATURAL GROUND
NIC	NOT IN CONTRACT
NO	NUMBER
OC	ON CENTER
OCEW	ON CENTER EACH WAY
OHP	OVERHEAD POWER
PC	POINT OF CURVATURE OR PRESSURE CLASS
PCC	POINT OF COMPOUND CURVATURE
PI	POINT OF INTERSECTION
PIV	POST INDICATOR VALVE
PL	PROPERTY LINE
PRC	POINT OF REVERSE CURVATURE
PRO	PROPOSED
PT	POINT OF TANGENCY
PVC	POINT OF VERTICAL CURVATURE
PVI	POINT OF VERTICAL INTERSECTION
PVT	POINT OF VERTICAL TANGENCY
R	RADIUS
RD	ROOF DRAIN
ROW	RIGHT OF WAY
S	SLOPE
SAN SWR	SANITARY SEWER
SD	STORM DRAIN
SEC	SECONDARY
SS	SANITARY SEWER
STA	STATION
SW	SECONDARY WATER LINE
TBC	TOP BACK OF CURB
TOG	TOP OF GRATE
TOA	TOP OF ASPHALT
TOC	TOP OF CONCRETE
TOF	TOP OF FOUNDATION
TOW	TOP OF WALL
TOS	TOP OF STEP
TYP	TYPICAL
VC	VERTICAL CURVE
WIV	WALL INDICATOR VALVE
W	WATER LINE

NOTE: MAY CONTAIN ABBREVIATIONS THAT ARE NOT USED IN THIS PLAN SET.

LEGEND

SECTION CORNER	EXISTING EDGE OF ASPHALT
EXISTING MONUMENT	PROPOSED EDGE OF ASPHALT
PROPOSED MONUMENT	EXISTING STRIPING
EXISTING REBAR AND CAP	PROPOSED STRIPING
SET ENSIGN REBAR AND CAP	EXISTING FENCE
EXISTING WATER METER	PROPOSED FENCE
PROPOSED WATER METER	EXISTING FLOW LINE
EXISTING WATER MANHOLE	PROPOSED FLOW LINE
PROPOSED WATER MANHOLE	GRADE BREAK
EXISTING WATER BOX	EXISTING STORM DRAIN LINE
EXISTING WATER VALVE	PROPOSED STORM DRAIN LINE
PROPOSED WATER VALVE	ROOF DRAIN LINE
EXISTING FIRE HYDRANT	CATCHMENTS
PROPOSED FIRE HYDRANT	HIGHWATER LINE
PROPOSED FIRE DEPARTMENT CONNECTION	EXISTING SANITARY SEWER
EXISTING SECONDARY WATER VALVE	PROPOSED SANITARY SEWER LINE
PROPOSED SECONDARY WATER VALVE	PROPOSED SAN. SWR. SERVICE LINE
EXISTING IRRIGATION BOX	EXISTING LAND DRAIN LINE
EXISTING IRRIGATION VALVE	PROPOSED LAND DRAIN LINE
PROPOSED IRRIGATION VALVE	PROPOSED LAND DRAIN SERVICE LINE
EXISTING SANITARY SEWER MANHOLE	EXISTING CULINARY WATER LINE
PROPOSED SANITARY SEWER MANHOLE	PROPOSED CULINARY WATER LINE
EXISTING SANITARY CLEAN OUT	PROPOSED CULINARY WATER SERVICE LINE
EXISTING STORM DRAIN CLEAN OUT BOX	EXISTING SECONDARY WATER LINE
PROPOSED STORM DRAIN CLEAN OUT BOX	PROPOSED SECONDARY WATER LINE
EXISTING STORM DRAIN INLET BOX	PROPOSED SEC. WATER SERVICE LINE
EXISTING STORM DRAIN CATCH BASIN	EXISTING IRRIGATION LINE
PROPOSED STORM DRAIN CATCH BASIN	PROPOSED IRRIGATION LINE
EXISTING STORM DRAIN COMBO BOX	EXISTING OVERHEAD POWER LINE
PROPOSED STORM DRAIN COMBO BOX	EXISTING ELECTRICAL LINE
EXISTING STORM DRAIN CLEAN OUT	EXISTING GAS LINE
EXISTING STORM DRAIN CULVERT	EXISTING TELEPHONE LINE
PROPOSED STORM DRAIN CULVERT	ACCESSIBLE ROUTE
TEMPORARY SAG INLET PROTECTION	SAW CUT LINE
TEMPORARY IN-LINE INLET PROTECTION	STRAW WATTLE
ROOF DRAIN	TEMPORARY BERM
EXISTING ELECTRICAL MANHOLE	TEMPORARY SILT FENCE
EXISTING ELECTRICAL BOX	LIMITS OF DISTURBANCE
EXISTING TRANSFORMER	EXISTING WALL
EXISTING UTILITY POLE	PROPOSED WALL
EXISTING LIGHT	EXISTING CONTOURS
PROPOSED LIGHT	PROPOSED CONTOURS
EXISTING GAS METER	BUILDABLE AREA WITHIN SETBACKS
EXISTING GAS MANHOLE	PUBLIC DRAINAGE EASEMENT
EXISTING GAS VALVE	EXISTING ASPHALT TO BE REMOVED
EXISTING TELEPHONE MANHOLE	PROPOSED ASPHALT
EXISTING TELEPHONE BOX	EXISTING CURB AND GUTTER
EXISTING TRAFFIC SIGNAL BOX	PROPOSED CURB AND GUTTER
EXISTING CABLE BOX	PROPOSED REVERSE PAN CURB AND GUTTER
EXISTING BOLLARD	TRANSITION TO REVERSE PAN CURB
PROPOSED BOLLARD	CONCRETE TO BE REMOVED
EXISTING SIGN	EXISTING CONCRETE
PROPOSED SIGN	PROPOSED CONCRETE
EXISTING SPOT ELEVATION	BUILDING TO BE REMOVED
PROPOSED SPOT ELEVATION	EXISTING BUILDING
EXISTING FLOW DIRECTION	PROPOSED BUILDING
EXISTING TREE	
DENSE VEGETATION	

NOTE: MAY CONTAIN SYMBOLS THAT ARE NOT USED IN THIS PLAN SET.

Babcock Design

Salt Lake City
52 Exchange Place
Salt Lake City, UT 84111
801.531.1144

Boise
800 W Main Street, Suite 940
Boise, ID 83702
208.424.7675

babcockdesign.com

Consultant

ENSIGN
THE STANDARD IN ENGINEERING

SANDY
45 W 10000 S, Suite 500
Sandy, UT 84070
Phone: 801.255.0529

ALPINE FIRE STATION

50 E 100 N ALPINE, UT 84004

Revisions

Num.	Description	Date

Project Number	25116
Original Issue	4/16/2026
Project Status	CD

The information and content represented herein is considered by law the architect's instruments of service and are the property of Babcock Design. They are available for limited review and evaluation by clients, consultants, contractors, government agencies, vendors, and office personnel only in accordance with this notice. They are intended for use only for the project specified and are to be used for no other purpose or project including additions to or modification of the completed project. No part thereof may be copied, reproduced, photographed, modified, published, uploaded, transmitted, disclosed, sold, distributed to others in any way including in digital form, or otherwise used without the prior written consent of Babcock Design.

COPYRIGHT © 2025 BABCOCK DESIGN

Stamp

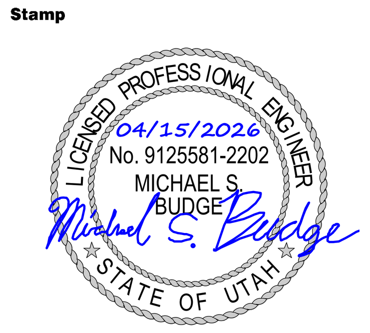

Sheet Title

GENERAL NOTES

Sheet Number

C-001

Current as of: 4/15/2026 2:02 PM

Original drawing is 30" x 42" z:\sandy\sandy 14000\14468\civil\drawings\c-001 gn.dwg

811 Know what's below. Call before you dig.

CALL BLUESTAKES @ 811 AT LEAST 48 HOURS PRIOR TO THE COMMENCEMENT OF ANY CONSTRUCTION.

BENCHMARK

SOUTHEAST CORNER OF SECTION 24, TOWNSHIP 4 SOUTH, RANGE 1 EAST SALT LAKE BASE AND MERIDIAN

ELEV = 4950.71'

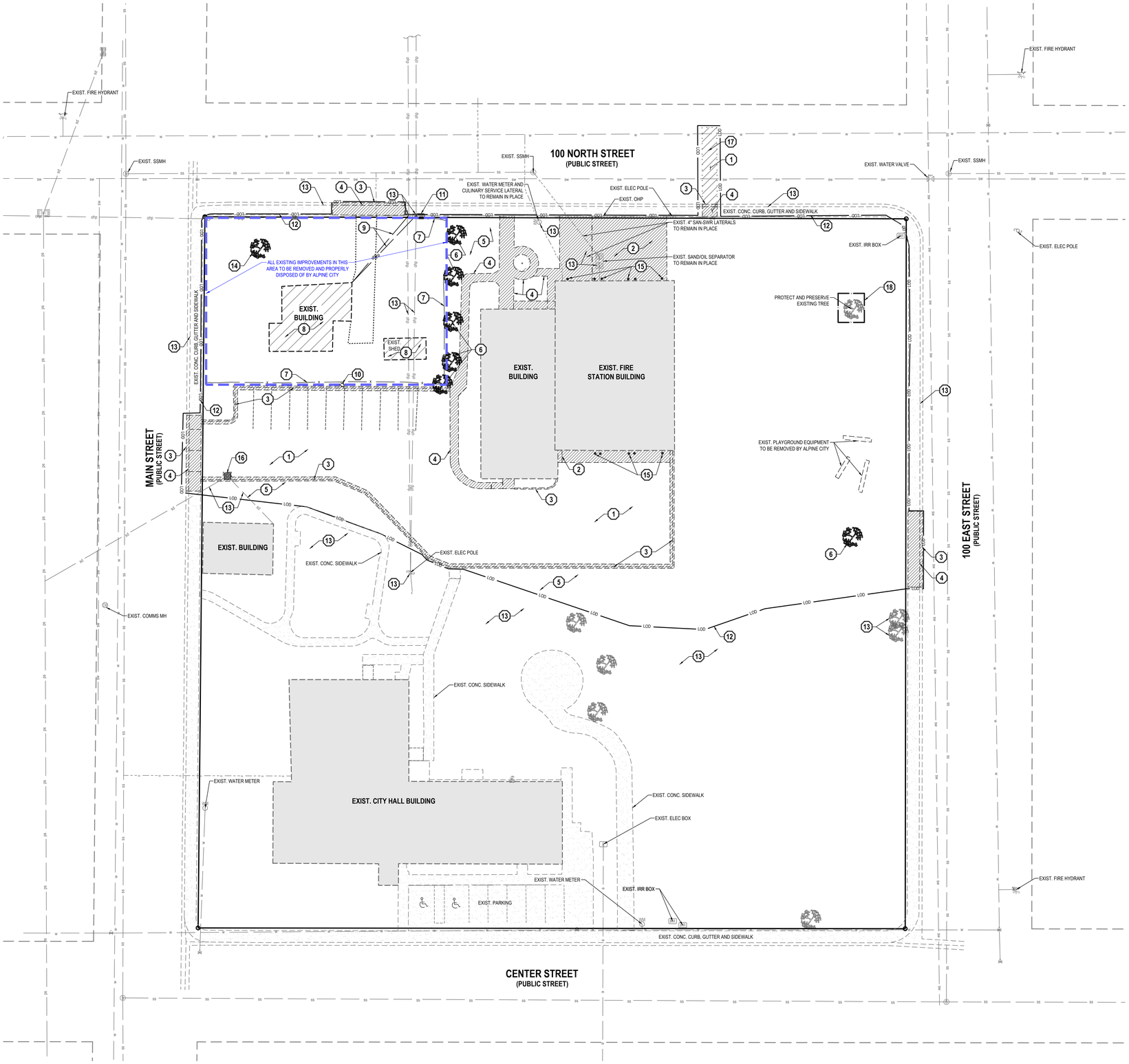

GENERAL NOTES

1. ALL WORK TO COMPLY WITH ALPINE CITY STANDARDS AND SPECIFICATIONS.
2. EXISTING UNDERGROUND UTILITIES AND IMPROVEMENTS ARE SHOWN IN THEIR APPROXIMATE LOCATIONS BASED UPON RECORD INFORMATION AVAILABLE AT THE TIME OF PREPARATION OF THESE PLANS. LOCATIONS MAY NOT HAVE BEEN VERIFIED IN THE FIELD AND NO GUARANTEE IS MADE AS TO THE ACCURACY OR COMPLETENESS OF THE INFORMATION SHOWN. IT SHALL BE THE RESPONSIBILITY OF THE CONTRACTOR TO DETERMINE THE EXISTENCE AND LOCATION OF THE UTILITIES SHOWN ON THESE PLANS OR INDICATED IN THE FIELD BY LOCATING SERVICES. ANY ADDITIONAL COSTS INCURRED AS A RESULT OF THE CONTRACTOR'S FAILURE TO VERIFY THE LOCATIONS OF EXISTING UTILITIES PRIOR TO THE BEGINNING OF CONSTRUCTION IN THEIR VICINITY SHALL BE BORNE BY THE CONTRACTOR AND ASSUMED INCLUDED IN THE CONTRACT. THE CONTRACTOR IS TO VERIFY ALL CONNECTION POINTS WITH THE EXISTING UTILITIES. THE CONTRACTOR IS RESPONSIBLE FOR ANY DAMAGE CAUSED TO THE EXISTING UTILITIES AND UTILITY STRUCTURES THAT ARE TO REMAIN. IF CONFLICTS WITH EXISTING UTILITIES OCCUR, THE CONTRACTOR SHALL NOTIFY THE ENGINEER PRIOR TO CONSTRUCTION TO DETERMINE IF ANY FIELD ADJUSTMENTS SHOULD BE MADE.
3. ALL SURFACE IMPROVEMENTS DISTURBED BY CONSTRUCTION SHALL BE RESTORED OR REPLACED, INCLUDING TREES AND DECORATIVE SHRUBS, SOD, FENCES, WALLS AND STRUCTURES, WHETHER OR NOT THEY ARE SPECIFICALLY SHOWN ON THE CONTRACT DOCUMENTS.
4. ALL CONSTRUCTION SIGNAGE, BARRICADES, TRAFFIC CONTROL DEVICES, ETC. SHALL CONFORM TO THE LATEST EDITION OF THE M.U.T.C.D. THE CONTRACTOR WILL MAINTAIN SUCH SO THAT THEY ARE PROPERLY PLACED AND VISIBLE AT ALL TIMES.
5. SIDEWALKS AND CURBS DESIGNATED TO BE DEMOLISHED SHALL BE DEMOLISHED TO THE NEAREST EXPANSION JOINT, MATCHING THESE PLANS AS CLOSELY AS POSSIBLE.
6. THE CONTRACTOR IS TO PROTECT AND PRESERVE ALL EXISTING IMPROVEMENTS, UTILITIES, AND SIGNS, ETC. UNLESS OTHERWISE NOTED ON THESE PLANS.

SCOPE OF WORK:

PROVIDE, INSTALL AND/OR CONSTRUCT THE FOLLOWING PER THE SPECIFICATIONS GIVEN OR REFERENCED, THE DETAILS NOTED, AND/OR AS SHOWN ON THE CONSTRUCTION DRAWINGS:

1. REMOVE AND PROPERLY DISPOSE OF EXISTING ASPHALT PAVEMENT.
2. REMOVE AND PROPERLY DISPOSE OF EXISTING CONCRETE PAVEMENT.
3. SAWCUT, REMOVE, AND PROPERLY DISPOSE OF EXISTING CONCRETE CURB AND GUTTER.
4. SAWCUT, REMOVE, AND PROPERLY DISPOSE OF EXISTING CONCRETE SIDEWALK.
5. REMOVE EXISTING LANDSCAPING IN THIS AREA. RETROFIT AND REPAIR IRRIGATION SYSTEM AS NEEDED. SEE LANDSCAPE PLANS FOR ADDITIONAL INFORMATION.
6. REMOVE EXISTING TREE.
7. REMOVE AND PROPERLY DISPOSE OF EXISTING FENCE.
8. REMOVE AND PROPERLY DISPOSE OF EXISTING STRUCTURES, CONCRETE SLABS, STAIRS, ETC., INCLUDING ALL ELECTRICAL APPURTENANCES, IN THIS AREA WHETHER OR NOT IDENTIFIED ON PLANS. CONTRACTOR TO FILL IN ALL HOLES CREATED DURING DEMOLITION WITH STRUCTURAL FILL TO PROPER SUBGRADE ELEVATION.
9. REMOVE AND RELOCATE EXISTING OVERHEAD POWER LINES. COORDINATE WITH LOCAL POWER COMPANY.
10. REMOVE AND PROPERLY DISPOSE OF EXISTING LIGHT POLE AND BASE. SEE ELECTRICAL PLANS FOR ADDITIONAL INFORMATION.
11. REMOVE AND RELOCATE EXISTING COMMUNICATION BOX. COORDINATE WITH LOCAL UTILITY COMPANY.
12. LIMIT OF DISTURBANCE.
13. PROTECT AND PRESERVE ALL EXISTING IMPROVEMENTS, UTILITIES, SIGNS, ETC. (TYPICAL UNLESS OTHERWISE NOTED).
14. COORDINATE TREE REMOVAL WITH OWNER. REMOVE AND SALVAGE EXISTING TREE FOR OWNER USE.
15. REMOVE AND PROPERLY DISPOSE OF EXISTING BOLLARD.
16. REMOVE AND PROPERLY DISPOSE OF EXISTING STORM DRAIN CATCH BASIN.
17. SAWCUT EXISTING ASPHALT PAVEMENT TO PROVIDE A CLEAN EDGE FOR THE TRANSITION BETWEEN EXISTING AND PROPOSED ASPHALT PAVEMENT.
18. TREE PROTECTION ZONE. EXISTING TREE WITHIN THIS ZONE TO REMAIN. CONTRACTOR TO ENSURE TREE IS PROTECTED DURING CONSTRUCTION. TREE MUST BE COMPLETELY SURROUNDED WITH 6' TALL FREE-STANDING CHAIN LINK PANELS FOR DURATION OF PROJECT.

NORTH

HORIZONTAL GRAPHIC SCALE

20 0 10 20 40

(IN FEET)

HORZ. 1 inch = 20 ft.

Babcock Design

Salt Lake City
52 Exchange Place
Salt Lake City, UT 84111
801.531.1144

Boise
800 W Main Street, Suite 940
Boise, ID 83702
208.424.7675

babcockdesign.com

Consultant

ENSIGN
THE STANDARD IN ENGINEERING

SANDY
45 W 10000 S, Suite 500
Sandy, UT 84070
Phone: 801.255.0529

ALPINE FIRE STATION

50 E 100 N ALPINE, UT 84004

Revisions

Num.	Description	Date

Project Number	25116
Original Issue	4/16/2026
Project Status	CD

The information and content represented herein is considered by law the architect's instruments of service and are the property of Babcock Design. They are available for limited review and evaluation by clients, consultants, contractors, governmental agencies, vendors, and office personnel only in accordance with this notice. They are intended for use only for the project specified and are to be used for no other purpose or location without the written permission of Babcock Design. Unauthorized use, including but not limited to reproduced, photographed, modified, published, uploaded, transmitted, disclosed, sold, distributed to others in any way including in digital form, or otherwise used without the prior written consent of Babcock Design.

COPYRIGHT © 2025 BABCOCK DESIGN

Stamp

LICENSED PROFESSIONAL ENGINEER
04/15/2026
No. 9125581-2202
MICHAEL S. BUDGE
STATE OF UTAH

Sheet Title

DEMOLITION PLAN

Sheet Number

C-100

Current as of: 4/15/2026 3:57 PM

Original drawing is 30" x 42" z:\sandy\sandy 140001\1468\civil\drawings\c-100 dp.dwg

811 Know what's below. Call before you dig.

CALL BLUESTAKES @ 811 AT LEAST 48 HOURS PRIOR TO THE COMMENCEMENT OF ANY CONSTRUCTION.

BENCHMARK

SOUTHEAST CORNER OF SECTION 24, TOWNSHIP 4 SOUTH, RANGE 1 EAST SALT LAKE BASE AND MERIDIAN

ELEV = 4950.71'

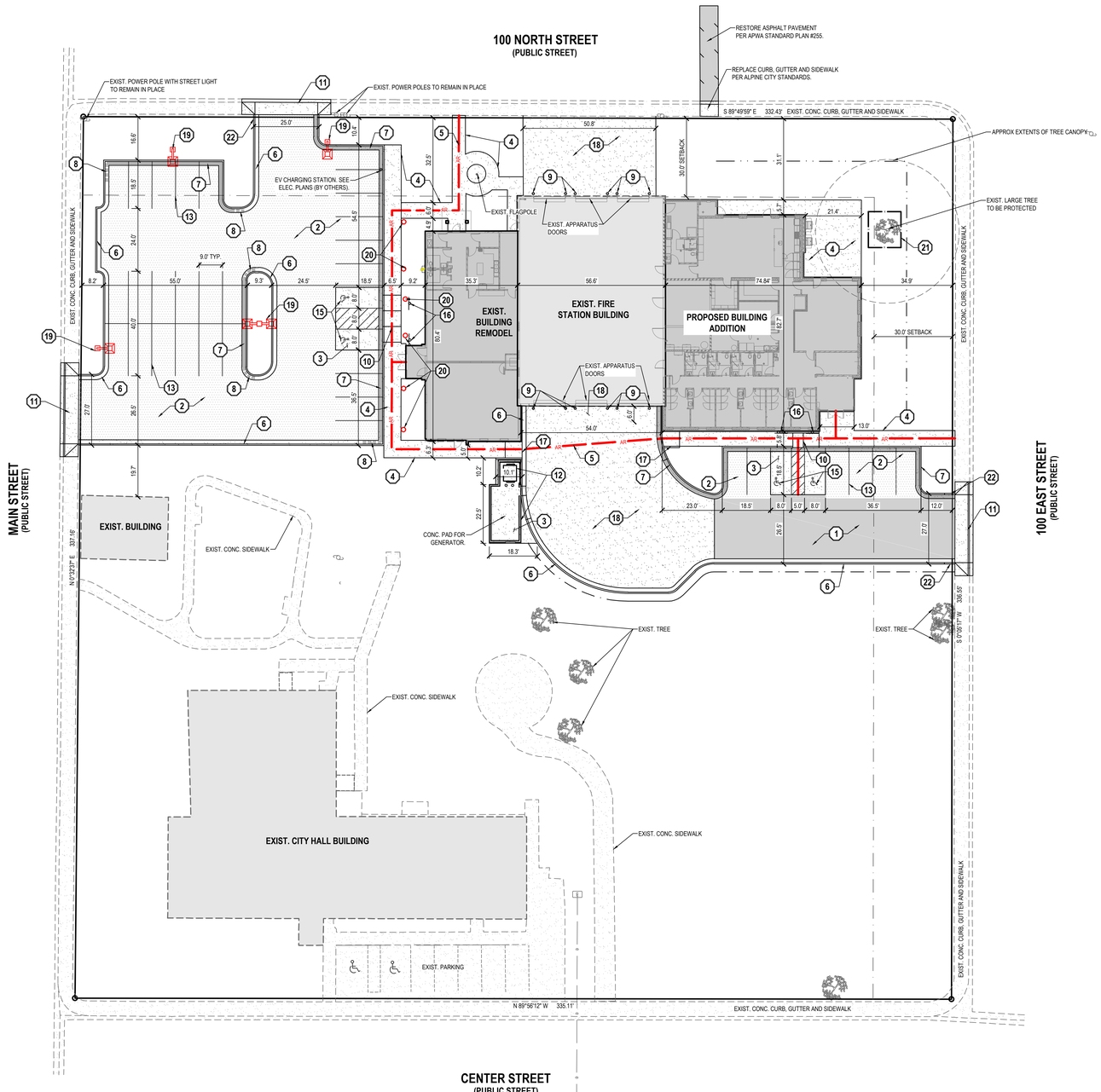

PARKING DATA TABLE	
STANDARD STALLS	39
ADA - ACCESSIBLE STALLS	2
TOTAL STALLS	41

GENERAL NOTES

1. ALL WORK TO COMPLY WITH ALPINE CITY STANDARDS AND SPECIFICATIONS.
2. ALL IMPROVEMENTS MUST COMPLY WITH ADA STANDARDS AND RECOMMENDATIONS.
3. SEE LANDSCAPE/ARCHITECTURAL PLANS FOR CONCRETE MATERIAL, COLOR, FINISH, AND SCORE PATTERNS THROUGHOUT SITE.
4. ALL PAVEMENT MARKINGS SHALL CONFORM TO THE LATEST EDITION OF THE M.U.T.C.D. (MANUAL ON UNIFORM TRAFFIC CONTROL DEVICES).
5. ALL SURFACE IMPROVEMENTS DISTURBED BY CONSTRUCTION SHALL BE RESTORED OR REPLACED, INCLUDING TREES AND DECORATIVE SHRUBS, SOD, FENCES, WALLS AND STRUCTURES, WHETHER OR NOT THEY ARE SPECIFICALLY SHOWN ON THE CONTRACT DOCUMENTS.
6. NOTIFY ENGINEER OF ANY DISCREPANCIES IN DESIGN OR STAKING BEFORE PLACING CONCRETE OR ASPHALT.
7. THE CONTRACTOR IS TO PROTECT AND PRESERVE ALL EXISTING IMPROVEMENTS, UTILITIES, AND SIGNS, ETC. UNLESS OTHERWISE NOTED ON THESE PLANS.

SCOPE OF WORK:

PROVIDE, INSTALL AND/OR CONSTRUCT THE FOLLOWING PER THE SPECIFICATIONS GIVEN OR REFERENCED, THE DETAILS NOTED, AND/OR AS SHOWN ON THE CONSTRUCTION DRAWINGS:

1. HEAVY-DUTY ASPHALT PAVEMENT PER GEOTECHNICAL REPORT AND DETAIL 6/C-600.
2. STANDARD ASPHALT PAVEMENT PER GEOTECHNICAL REPORT AND DETAIL 5/C-600.
3. STANDARD CONCRETE PAVEMENT PER GEOTECHNICAL REPORT AND DETAIL 7/C-600.
4. 4" THICK CONCRETE SIDEWALK PER APWA STANDARD PLAN NO. 231.
5. ACCESSIBLE ROUTE TO THE PUBLIC WAY. MAXIMUM ALLOWABLE CROSS SLOPE SHALL BE 2.0%.
6. 24" COLLECTION CURB AND GUTTER PER DETAIL 8/C-600.
7. 24" REVERSE PAN CURB AND GUTTER PER DETAIL 9/C-600.
8. TRANSITION BETWEEN COLLECTION CURB AND GUTTER AND REVERSE PAN CURB AND GUTTER.
9. BOLLARD PER DETAIL 10/C-600.
10. PEDESTRIAN RAMP- 6" THICK CONCRETE WITH 6" UNTREATED BASE COURSE WITH #4 EPOXY-COATED REBAR @ 24" O.C.E.W. PER DETAIL 12/C-600. SEE GRADING AND DRAINAGE PLAN FOR ELEVATION INFORMATION.
11. FLARE DRIVEWAY APPROACH PER APWA STANDARD PLAN NO. 221.
12. TRASH AND ELECTRICAL GENERATOR ENCLOSURE PER ARCHITECTURAL PLANS.
13. 4" WIDE SOLID WHITE PAVEMENT MARKING PER M.U.T.C.D. STANDARD PLANS.
14. WHITE CROSSWALK MARKING PER M.U.T.C.D. STANDARD PLANS
15. PAINTED ADA SYMBOL AND ASSOCIATED HATCHING PER M.U.T.C.D. STANDARD PLANS.
16. "HANDICAP PARKING" SIGN PER ARCHITECTURAL PLANS.
17. PEDESTRIAN RAMP SIMILAR TO APWA STANDARD PLAN NO. 236.1.
18. HEAVY-DUTY CONCRETE PAVEMENT PER GEOTECHNICAL REPORT AND DETAIL 13/C-600.
19. DOWNTOWN STREET LIGHT PER ALPINE CITY STD DWG NO 31a. SEE DETAIL ON SHEET C-600 AND ELECTRIC SITE PLAN FOR INFORMATION.
20. LIGHTED BOLLARD. SEE ELECTRIC SITE PLAN FOR INFORMATION.
21. TREE PROTECTION ZONE. EXISTING TREE WITHIN THIS ZONE TO REMAIN. CONTRACTOR TO ENSURE TREE IS PROTECTED DURING CONSTRUCTION. TREE MUST BE COMPLETELY SURROUNDED WITH 6' TALL FREE-STANDING CHAIN LINK PANELS FOR DURATION OF PROJECT.
22. TRANSITION TO 0" CURB FACE.

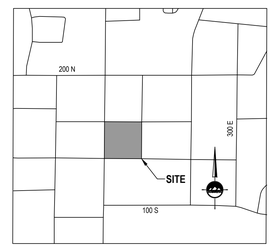

VICINITY MAP
(NOT TO SCALE)

HORIZONTAL GRAPHIC SCALE

20 0 10 20 40
(IN FEET)
HORZ: 1 inch = 20 ft.

Babcock Design

Salt Lake City
52 Exchange Place
Salt Lake City, UT 84111
801.531.1144

Boise
800 W Main Street, Suite 940
Boise, ID 83702
208.424.7675

babcockdesign.com

Consultant

ENSIGN
THE STANDARD IN ENGINEERING

SANDY
45 W 10000 S, Suite 500
Sandy, UT 84070
Phone: 801.255.0529

ALPINE FIRE STATION

50 E 100 N ALPINE, UT 84004

Revisions

Num.	Description	Date

Project Number	25116
Original Issue	4/16/2026
Project Status	CD

The information and content contained herein is considered by law the architect's instruments of service and as the property of Babcock Design. They are available for limited review and evaluation by clients, consultants, contractors, government agencies, vendors, and others concerned only in accordance with the terms of their contract or agreement with us. Unauthorized alteration or use of these documents for any purpose including additions to or modification of the completed project, for part thereof may be copied, reproduced, photographed, modified, published, uploaded, transmitted, disclosed, sold, distributed to others in any way including in digital form, or otherwise used without the prior written consent of Babcock Design.

COPYRIGHT © 2025 BABCOCK DESIGN

Stamp

LICENSED PROFESSIONAL ENGINEER
No. 9125581-2202
MICHAEL S. BUDGE
STATE OF UTAH
04/15/2026
Michael S. Budge

Sheet Title

SITE PLAN

Sheet Number

C-200

Original drawing is 30" x 42" J:\sandy\sandy 140001446\civil\drawings\c-200 sp.dwg

Current as of: 4/15/2026 2:25 PM

811 Know what's below. Call before you dig.

CALL BLUESTAKES @ 811 AT LEAST 48 HOURS PRIOR TO THE COMMENCEMENT OF ANY CONSTRUCTION.

BENCHMARK

SOUTHEAST CORNER OF SECTION 24, TOWNSHIP 4 SOUTH, RANGE 1 EAST SALT LAKE BASE AND MERIDIAN

ELEV = 4950.71'

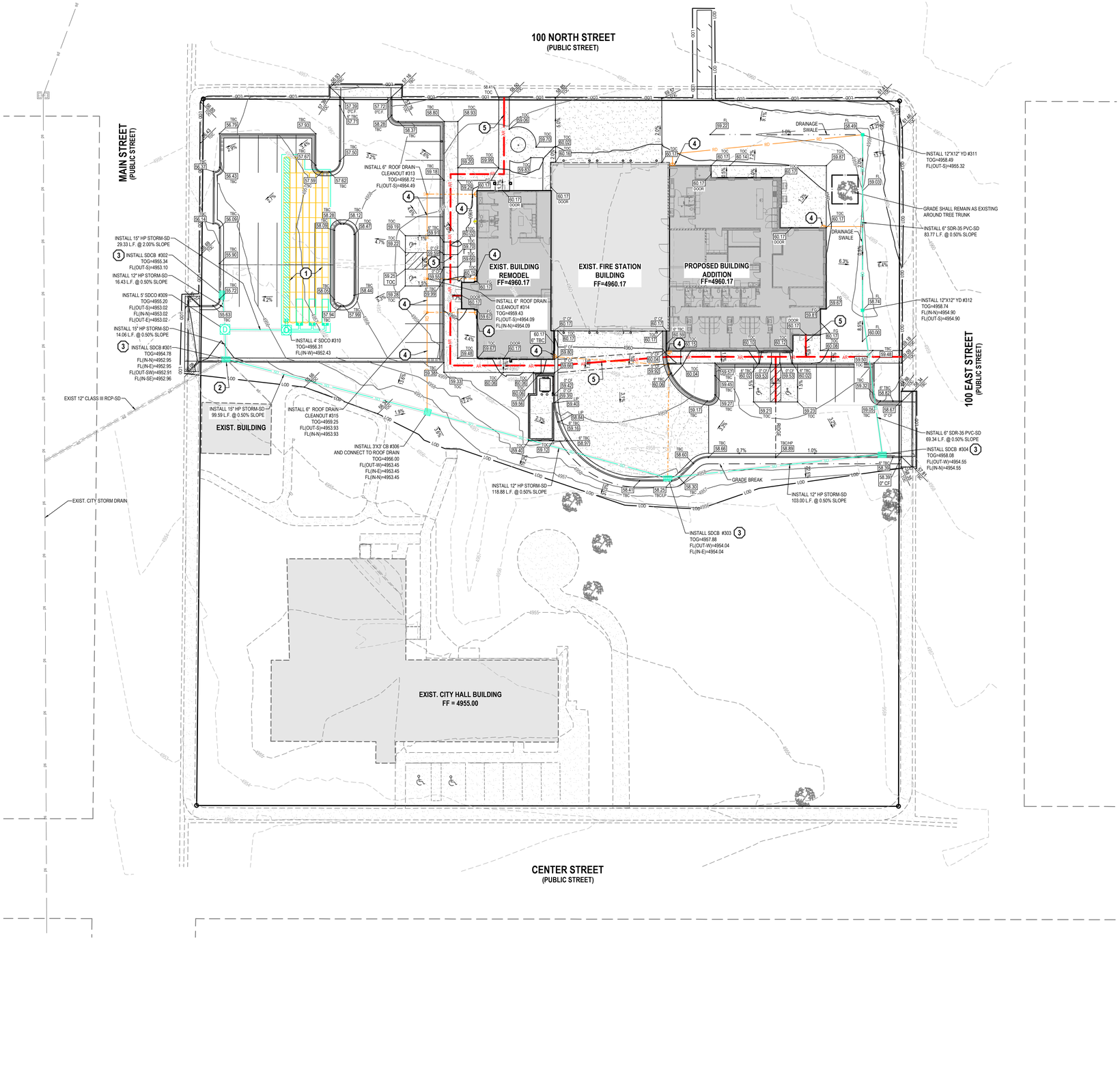

HORIZONTAL GRAPHIC SCALE

20 0 10 20 40

(IN FEET)

HORZ: 1 inch = 20 ft.

GENERAL NOTES

1. ALL WORK TO COMPLY WITH ALPINE CITY STANDARDS AND SPECIFICATIONS.
2. ALL IMPROVEMENTS MUST COMPLY WITH ADA STANDARDS AND RECOMMENDATIONS.
3. ALL WORK SHALL COMPLY WITH THE RECOMMENDATIONS OF THE GEOTECHNICAL ENGINEER POSSIBLY INCLUDING, BUT NOT LIMITED TO, REMOVAL OF UNCONSOLIDATED FILL, ORGANICS, AND DEBRIS, PLACEMENT OF SUBSURFACE DRAIN LINES AND GEOTEXTILE, AND OVEREXCAVATION OF UNSUITABLE BEARING MATERIALS AND PLACEMENT OF ACCEPTABLE FILL MATERIAL.
4. THE CONTRACTOR SHALL BECOME FAMILIAR WITH THE EXISTING SOIL CONDITIONS.
5. ELEVATIONS HAVE BEEN TRUNCATED FOR CLARITY. XX.XX REPRESENTS AN ELEVATION OF 49XX.XX ON THESE PLANS.
6. LANDSCAPED AREAS REQUIRE SUBGRADE TO BE MAINTAINED AT A SPECIFIC ELEVATION BELOW FINISHED GRADE AND REQUIRE SUBGRADE TO BE PROPERLY PREPARED AND SCARIFIED. SEE LANDSCAPE PLANS FOR ADDITIONAL INFORMATION.
7. SLOPE ALL LANDSCAPED AREAS AWAY FROM BUILDING FOUNDATIONS TOWARD CURB AND GUTTER OR STORM DRAIN INLETS.
8. EXISTING UNDERGROUND UTILITIES AND IMPROVEMENTS ARE SHOWN IN THEIR APPROXIMATE LOCATIONS BASED UPON RECORD INFORMATION AVAILABLE AT THE TIME OF PREPARATION OF THESE PLANS. LOCATIONS MAY NOT HAVE BEEN VERIFIED IN THE FIELD AND NO GUARANTEE IS MADE AS TO THE ACCURACY OR COMPLETENESS OF THE INFORMATION SHOWN. IT SHALL BE THE RESPONSIBILITY OF THE CONTRACTOR TO DETERMINE THE EXISTENCE AND LOCATION OF THE UTILITIES SHOWN ON THESE PLANS OR INDICATED IN THE FIELD BY LOCATING SERVICES. ANY ADDITIONAL COSTS INCURRED AS A RESULT OF THE CONTRACTOR'S FAILURE TO VERIFY THE LOCATIONS OF EXISTING UTILITIES PRIOR TO THE BEGINNING OF CONSTRUCTION IN THEIR VICINITY SHALL BE BORNE BY THE CONTRACTOR AND ASSUMED INCLUDED IN THE CONTRACT. THE CONTRACTOR IS TO VERIFY ALL CONNECTION POINTS WITH THE EXISTING UTILITIES. THE CONTRACTOR IS RESPONSIBLE FOR ANY DAMAGE CAUSED TO THE EXISTING UTILITIES AND UTILITY STRUCTURES THAT ARE TO REMAIN. IF CONFLICTS WITH EXISTING UTILITIES OCCUR, THE CONTRACTOR SHALL NOTIFY THE ENGINEER PRIOR TO CONSTRUCTION TO DETERMINE IF ANY FIELD ADJUSTMENTS SHOULD BE MADE.
9. ALL STORM DRAIN INFRASTRUCTURE TO BE INSTALLED PER ALPINE CITY STANDARD PLANS AND SPECIFICATIONS.
10. ENSURE MINIMUM COVER OVER ALL STORM DRAIN PIPES PER MANUFACTURER'S RECOMMENDATIONS. NOTIFY ENGINEER IF MINIMUM COVER CANNOT BE ATTAINED.
11. ALL FACILITIES WITH DOWNSPOUTS/ROOF DRAINS SHALL BE CONNECTED TO THE STORM DRAIN SYSTEM. SEE PLUMBING PLANS FOR DOWNSPOUT/ROOF DRAIN LOCATIONS AND SIZES. ALL ROOF DRAINS TO HAVE MINIMUM 1% SLOPE.
12. THE CONTRACTOR SHALL ADJUST TO GRADE ALL EXISTING UTILITIES AS NEEDED PER LOCAL GOVERNING AGENCY'S STANDARDS AND SPECIFICATIONS.
13. NOTIFY ENGINEER OF ANY DISCREPANCIES IN DESIGN OR STAKING BEFORE PLACING CONCRETE, ASPHALT, OR STORM DRAIN STRUCTURES OR PIPES.
14. THE CONTRACTOR IS TO PROTECT AND PRESERVE ALL EXISTING IMPROVEMENTS, UTILITIES, AND SIGNS, ETC. UNLESS OTHERWISE NOTED ON THESE PLANS.

SCOPE OF WORK:

PROVIDE, INSTALL AND/OR CONSTRUCT THE FOLLOWING PER THE SPECIFICATIONS GIVEN OR REFERENCED, THE DETAILS NOTED, AND/OR AS SHOWN ON THE CONSTRUCTION DRAWINGS:

(1) UNDERGROUND DETENTION BASIN
73 ADS STORMTECH SC-310 CHAMBERS WITH 14 ADS STORMTECH END CAPS.
INSTALL PER MANUFACTURER'S RECOMMENDATIONS.
SEE DETAILS FOR CHAMBERS ON SHEET C-601.
TOTAL STORAGE REQUIRED = 2,329 CF
TOTAL STORAGE PROVIDED = 2,411 CF
LID RETENTION STORAGE REQUIRED = 606 CF
LID RETENTION STORAGE PROVIDED = 991 CF @ ELEV 4952.91
TOP OF STONE = 4954.33
TOP OF CHAMBERS = 4953.83
BOTTOM OF CHAMBERS = 4952.50
BOTTOM OF STONE = 4952.00
*STORAGE CHAMBERS TO BE INSTALLED PER MANUFACTURER'S DRAWINGS AND SPECIFICATIONS, SUBMITTAL MUST BE PROVIDED TO EOR FOR REVIEW PRIOR TO ORDERING MATERIALS OR BEGINNING CONSTRUCTION. CONTRACTORS SHALL HOLD A PRECONSTRUCTION MEETING WITH THE MANUFACTURER PRIOR TO STARTING CONSTRUCTION.

(2) 2.0" ORIFICE PLATE PER DETAIL 14/C-600 INSTALLED ON WEST SIDE OF STORM DRAIN BOX.

(3) CURB INLET PER ALPINE CITY STANDARD DETAIL #20. SEE SHEET C-600.

(4) 4" SDR-35 PVC ROOF DRAIN WITH CLEANOUTS AS SHOWN AND LAID AT 1.0% MINIMUM SLOPE. CONNECT TO BUILDING AND EXTEND TO STORM DRAIN SYSTEM. CONNECT TO PIPE OR CHAMBERS WITH INSERTA-TEE ONEFIT OR DIRECTLY INTO STORM DRAIN BOX AS SHOWN ON PLANS.

(5) ACCESSIBLE ROUTE TO THE PUBLIC WAY. MAXIMUM ALLOWABLE CROSS SLOPE SHALL BE 2.0%.

Babcock Design

Salt Lake City
52 Exchange Place
Salt Lake City, UT 84111
801.531.1144

Boise
800 W Main Street, Suite 940
Boise, ID 83702
208.424.7675

babcockdesign.com

Consultant

ENSIGN
THE STANDARD IN ENGINEERING

SANDY
45 W 10000 S, Suite 500
Sandy, UT 84070
Phone: 801.255.0529

ALPINE FIRE STATION

50 E 100 N ALPINE, UT 84004

Revisions

Num.	Description	Date

Project Number	25116
Original Issue	4/16/2026
Project Status	CD

The information and content contained herein is considered to be the architect's instruments of service and as the property of Babcock Design. They are available for limited review and evaluation by clients, consultants, contractors, governmental agencies, vendors, and others prepared only in accordance with the terms of the agreement. Any other use or reuse without the written permission of Babcock Design is prohibited. Any project including architectural or mechanical that completely or partially "duplicates" may be copied, reproduced, photographed, modified, published, uploaded, transmitted, disclosed, sold, distributed to others in any way including in digital form, or otherwise used without the prior written consent of Babcock Design.

COPYRIGHT © 2025 BABCOCK DESIGN

Stamp

LICENSED PROFESSIONAL ENGINEER
No. 9125581-2202
MICHAEL S. BUDGE
STATE OF UTAH
04/15/2026
Michael S. Budge

Sheet Title

GRADING AND DRAINAGE PLAN

Sheet Number

C-300

Original drawing is 30" x 42" J:\sandy\sandy 140001446ft\civil\drawings\c-300 gp.dwg
Current as of: 4/15/2026 3:25 PM

811 Know what's below. Call before you dig.

CALL BLUESTAKES @ 811 AT LEAST 48 HOURS PRIOR TO THE COMMENCEMENT OF ANY CONSTRUCTION.

BENCHMARK

SOUTHEAST CORNER OF SECTION 24, TOWNSHIP 4 SOUTH, RANGE 1 EAST SALT LAKE BASE AND MERIDIAN

ELEV = 4950.71'

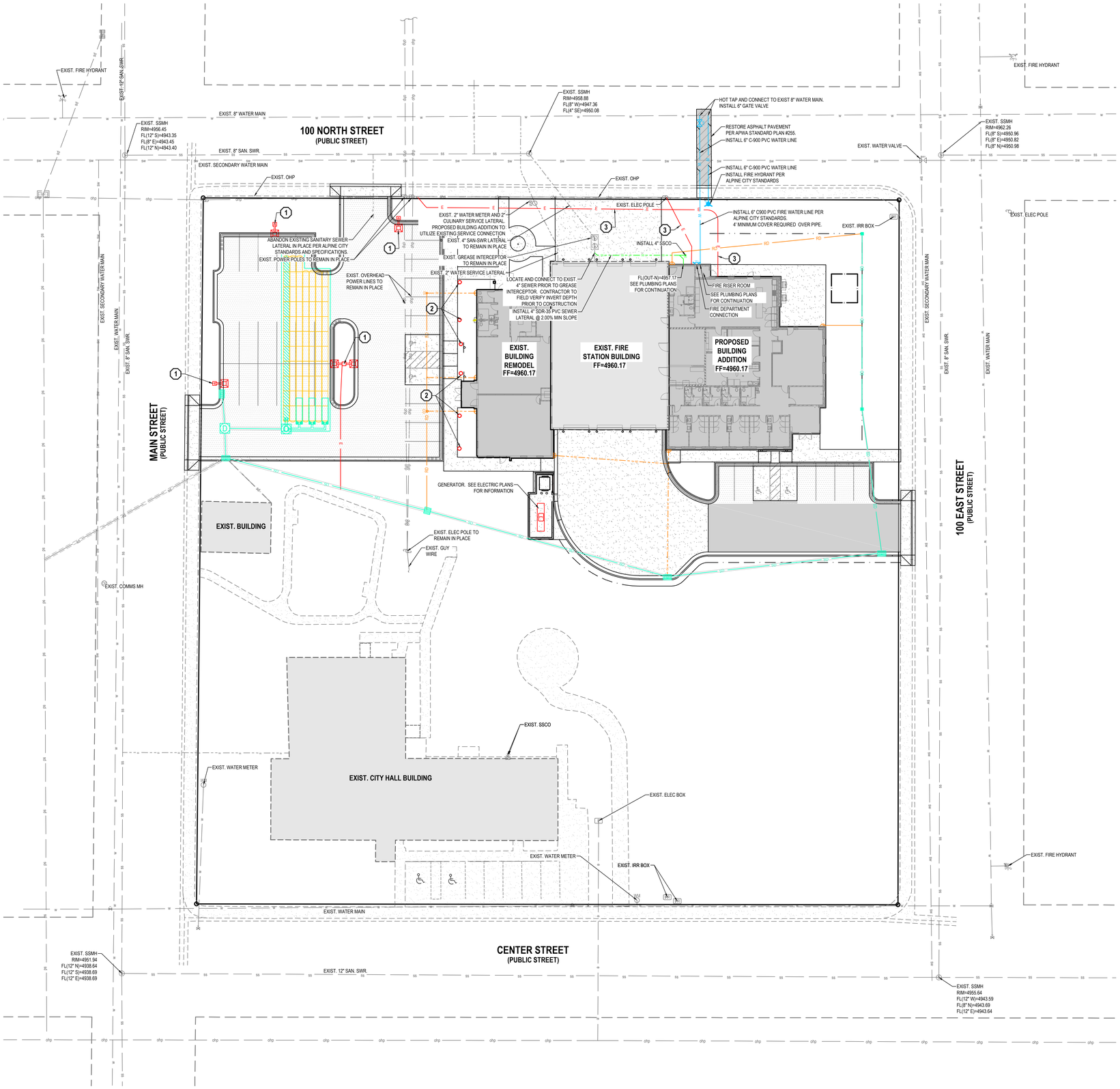

GENERAL NOTES

1. ALL WORK TO COMPLY WITH THE GOVERNING AGENCY'S STANDARDS AND SPECIFICATIONS.
2. EXISTING UNDERGROUND UTILITIES AND IMPROVEMENTS ARE SHOWN IN THEIR APPROXIMATE LOCATIONS BASED UPON RECORD INFORMATION AVAILABLE AT THE TIME OF PREPARATION OF THESE PLANS. LOCATIONS MAY NOT HAVE BEEN VERIFIED IN THE FIELD AND NO GUARANTEE IS MADE AS TO THE ACCURACY OR COMPLETENESS OF THE INFORMATION SHOWN. IT SHALL BE THE RESPONSIBILITY OF THE CONTRACTOR TO DETERMINE THE EXISTENCE AND LOCATION OF THE UTILITIES SHOWN ON THESE PLANS OR INDICATED IN THE FIELD BY LOCATING SERVICES. ANY ADDITIONAL COSTS INCURRED AS A RESULT OF THE CONTRACTOR'S FAILURE TO VERIFY THE LOCATIONS OF EXISTING UTILITIES PRIOR TO THE BEGINNING OF CONSTRUCTION IN THEIR VICINITY SHALL BE BORNE BY THE CONTRACTOR AND ASSUMED INCLUDED IN THE CONTRACT. THE CONTRACTOR IS TO VERIFY ALL CONNECTION POINTS WITH THE EXISTING UTILITIES. THE CONTRACTOR IS RESPONSIBLE FOR ANY DAMAGE CAUSED TO THE EXISTING UTILITIES AND UTILITY STRUCTURES THAT ARE TO REMAIN. IF CONFLICTS WITH EXISTING UTILITIES OCCUR, THE CONTRACTOR SHALL NOTIFY THE ENGINEER PRIOR TO CONSTRUCTION TO DETERMINE IF ANY FIELD ADJUSTMENTS SHOULD BE MADE.
3. ALL SANITARY SEWER INFRASTRUCTURE TO BE INSTALLED PER ALPINE CITY STANDARD PLANS AND SPECIFICATIONS.
4. ALL WATER INFRASTRUCTURE TO BE INSTALLED PER ALPINE CITY STANDARD PLANS AND SPECIFICATIONS.
6. DEFLECT OR LOOP ALL WATERLINES TO AVOID CONFLICTS WITH OTHER UTILITIES PER GOVERNING AGENCY'S STANDARDS AND SPECIFICATIONS.
7. PROJECT SHALL COMPLY WITH ALL UTAH DIVISION OF DRINKING WATER RULES AND REGULATIONS INCLUDING, BUT NOT LIMITED TO, THOSE PERTAINING TO BACKFLOW PROTECTION AND CROSS CONNECTION PREVENTION.
8. THE CONTRACTOR IS TO COORDINATE ALL UTILITIES WITH MECHANICAL/PLUMBING PLANS.
9. NOTIFY ENGINEER OF ANY DISCREPANCIES IN DESIGN OR STAKING BEFORE PLACING UTILITY STRUCTURES OR PIPES.
10. THE CONTRACTOR SHALL ADJUST TO GRADE ALL EXISTING UTILITIES AS NEEDED PER LOCAL GOVERNING AGENCY'S STANDARDS AND SPECIFICATIONS.
11. THE CONTRACTOR IS TO PROTECT AND PRESERVE ALL EXISTING IMPROVEMENTS, UTILITIES, AND SIGNS, ETC. UNLESS OTHERWISE NOTED ON THESE PLANS.

SCOPE OF WORK:

PROVIDE, INSTALL AND/OR CONSTRUCT THE FOLLOWING PER THE SPECIFICATIONS GIVEN OR REFERENCED, THE DETAILS NOTED, AND/OR AS SHOWN ON THE CONSTRUCTION DRAWINGS:

1. DOWNTOWN STREET LIGHT PER ALPINE CITY STD DWG NO 31a. SEE DETAIL ON SHEET C-600 AND ELECTRIC SITE PLAN FOR INFORMATION.
2. LIGHTED BOLLARD. SEE ELECTRIC SITE PLAN FOR INFORMATION.
3. UNDERGROUND ELECTRIC CONDUIT. SEE ELECTRIC SITE PLAN FOR INFORMATION.

HORIZONTAL GRAPHIC SCALE

20 0 10 20 40

(IN FEET)

HORZ: 1 inch = 20 ft.

Babcock Design

Salt Lake City
52 Exchange Place
Salt Lake City, UT 84111
801.531.1144

Boise
800 W Main Street, Suite 940
Boise, ID 83702
208.424.7675

babcockdesign.com

Consultant

ENSIGN
THE STANDARD IN ENGINEERING

SANDY
45 W 10000 S, Suite 500
Sandy, UT 84070
Phone: 801.255.0529

ALPINE FIRE STATION

50 E 100 N ALPINE, UT 84004

Revisions

Num.	Description	Date

Project Number	25116
Original Issue	4/16/2026
Project Status	CD

The information and content contained herein is considered by law the architect's instruments of service and as the property of Babcock Design. They are available for limited review and publication by clients, consultants, contractors, government agencies, reviewers, and office personnel only in accordance with this notice. They are intended for use only for the project specified and not to be used for no other purpose or project including additions to or modification of the completed project. No part thereof may be copied, reproduced, photographed, modified, published, uploaded, transmitted, disclosed, sold, distributed to others in any way including in digital form, or otherwise used without the prior written consent of Babcock Design.

COPYRIGHT © 2025 BABCOCK DESIGN

Stamp

LICENSED PROFESSIONAL ENGINEER
04/15/2026
No. 9125581-2202
MICHAEL S. BUDGE
STATE OF UTAH

Sheet Title

UTILITY PLAN

Sheet Number

C-400

Current as of: 4/15/2026 2:39 PM

Original drawing is 30" x 42" z:\sandy\sandy 1-40000 3-4468\civil\drawings\c-400 up.dwg

811 Know what's below. Call before you dig.

CALL BLUESTAKES @ 811 AT LEAST 48 HOURS PRIOR TO THE COMMENCEMENT OF ANY CONSTRUCTION.

BENCHMARK

SOUTHEAST CORNER OF SECTION 24, TOWNSHIP 4 SOUTH, RANGE 1 EAST SALT LAKE BASE AND MERIDIAN

ELEV = 4950.71'

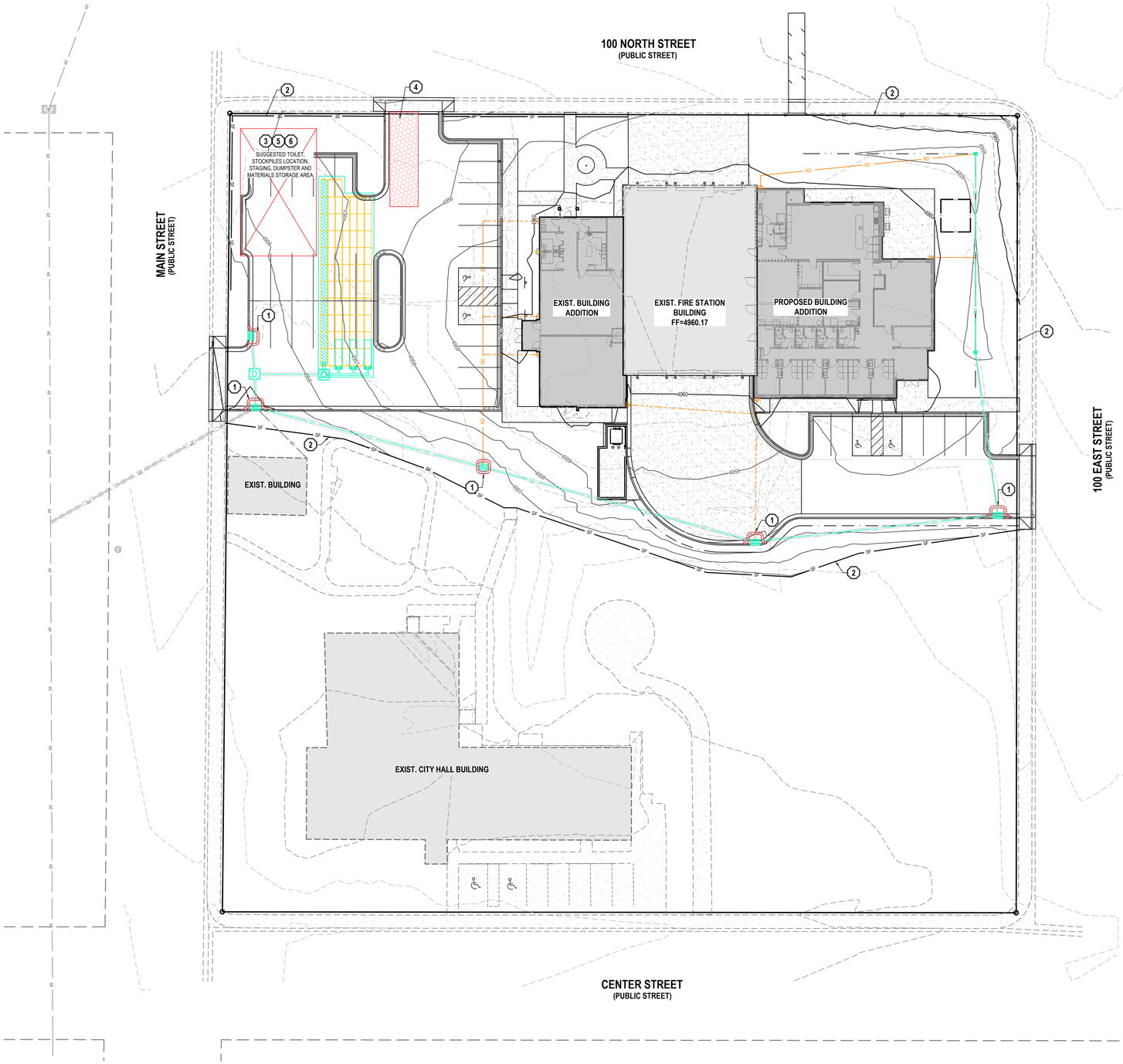

GENERAL NOTES

1. THIS PLAN IS DESIGNED AS A FIRST APPRAISAL OF NECESSARY MEANS TO PROTECT THE WATERS OF THE STATE FROM POTENTIAL POLLUTION. IT IS THE RESPONSIBILITY OF THE OWNER/OPERATOR TO ADD WARRANTED BEST MANAGEMENT PRACTICES (BMPS) AS NECESSARY, MODIFY THOSE SHOWN AS APPROPRIATE, AND DELETE FROM THE PROJECT THOSE FOUND TO BE UNNECESSARY. FEDERAL AND STATE LAW ALLOWS THESE UPDATES TO BE MADE BY THE OWNER/OPERATOR ONSITE AND RECORDED BY THE OWNER/OPERATOR ON THE COPY OF THE SWPPP KEPT ONSITE.
2. DISTURBED LAND SHALL BE KEPT TO A MINIMUM. STABILIZATION MEASURES SHALL BE INITIATED AS SOON AS PRACTICABLE IN PORTIONS OF THE SITE WHERE CONSTRUCTION ACTIVITIES HAVE TEMPORARILY OR PERMANENTLY CEASED, BUT IN NO CASE MORE THAN 14 DAYS AFTER THE CONSTRUCTION ACTIVITY IN THAT PORTION OF THE SITE HAS TEMPORARILY OR PERMANENTLY CEASED. HOWEVER, WHERE CONSTRUCTION ACTIVITY ON A PORTION OF THE SITE IS TEMPORARILY CEASED, AND EARTH DISTURBING ACTIVITIES WILL BE RESUMED WITHIN 21 DAYS, TEMPORARY STABILIZATION MEASURES DO NOT HAVE TO BE INITIATED ON THAT PORTION OF THE SITE.
3. RESEED DISTURBED LAND WITH NATIVE GRASS MIXTURE WITHIN 14 CALENDAR DAYS OF ACHIEVEMENT OF FINISH GRADE TO STABILIZE SOILS IF LAND IS NOT TO BE RE-WORKED WITHIN 14 CALENDAR DAYS OF THE CESSATION OF CONSTRUCTION ACTIVITIES AT THAT LOCATION.
4. DETAILS SHOWN ARE TO BE EMPLOYED TO PROTECT RUNOFF AS APPROPRIATE DURING CONSTRUCTION. NOT ALL DETAILS ARE NECESSARY AT ALL PHASES OF THE PROJECT. IT SHALL BE THE RESPONSIBILITY OF THE OWNER/OPERATOR TO USE APPROPRIATE BEST MANAGEMENT PRACTICES AT THE APPROPRIATE PHASE OF CONSTRUCTION. SEE SWPPP FOR BMP IMPLEMENTATION SCHEDULE.
5. VARIOUS BEST MANAGEMENT PRACTICES HAVE BEEN SHOWN ON THE PLANS AT SUGGESTED LOCATIONS. THE CONTRACTOR MAY MOVE AND RECONFIGURE THESE BMPS TO OTHER LOCATIONS IF PREFERRED, PROVIDED THE INTENT OF THE DESIGN IS PRESERVED.
6. NOT ALL POSSIBLE BMPS HAVE BEEN SHOWN. THE CONTRACTOR IS RESPONSIBLE TO APPLY CORRECT MEASURES TO PREVENT THE POLLUTION OF STORM WATER PER PROJECT SWPPP.
7. A UPDES (UTAH POLLUTANT DISCHARGE ELIMINATION SYSTEM) PERMIT IS REQUIRED FOR ALL CONSTRUCTION ACTIVITIES 1 ACRE OR MORE.

SCOPE OF WORK:

PROVIDE, INSTALL AND/OR CONSTRUCT THE FOLLOWING PER THE SPECIFICATIONS GIVEN OR REFERENCED, THE DETAILS NOTED, AND/OR AS SHOWN ON THE CONSTRUCTION DRAWINGS:

1. INLET PROTECTION PER DETAIL 1/C-600.
2. SILT FENCE PER DETAIL 2/C-600.
3. PORTABLE TOILET PER DETAIL 3/C-600.
4. VEHICLE WASHDOWN AND STABILIZED CONSTRUCTION ENTRANCE PER DETAIL 4/C-600.
5. SUGGESTED TEMPORARY CONSTRUCTION SITE PARKING, STAGING, DUMPSTER, AND MATERIAL STORAGE AREA.
6. SUGGESTED STOCKPILE AREA.

REVISION SCHEDULE

NUMBER	DATE	AUTHOR	COMPANY REPRESENTATIVE SIGNATURE
1			
2			
3			
4			
5			
6			
7			
8			
9			
10			
11			
12			

NORTH

HORIZONTAL GRAPHIC SCALE

20 0 10 20 40

(IN FEET)

HORZ. 1 inch = 20 ft.

Babcock Design

Salt Lake City
52 Exchange Place
Salt Lake City, UT 84111
801.531.1144

Boise
800 W Main Street, Suite 940
Boise, ID 83702
208.424.7675

babcockdesign.com

Consultant

ENSIGN
THE STANDARD IN ENGINEERING

SANDY
45 W 10000 S, Suite 500
Sandy, UT 84070
Phone: 801.255.0529

ALPINE FIRE STATION

50 E 100 N ALPINE, UT 84004

Revisions

Num.	Description	Date

Project Number 25116
Original Issue 4/16/2026
Project Status CD

The information and content contained herein is considered by law the architect's instruments of service and are the property of Babcock Design. They are available for limited review and evaluation by clients, consultants, contractors, government agencies, vendors, and office personnel as is necessary to complete the project. They are available for use solely for the project identified and are not to be used for any purpose or project other than that specifically identified without the written consent of Babcock Design. No part of these documents may be reproduced, photographed, modified, published, exhibited, transmitted, disclosed, sold, distributed to others in any way including in digital form, or otherwise used without the prior written consent of Babcock Design.

COPYRIGHT © 2025 BABCOCK DESIGN

Stamp

LICENSED PROFESSIONAL ENGINEER
04/15/2026
No. 9125581-2202
MICHAEL S. BUDGE
Michael S. Budge
STATE OF UTAH

Sheet Title

EROSION CONTROL PLAN

Sheet Number

C-500

Current as of: 4/15/2026 2:42 PM

Original drawing is 30" x 42" z:\sandy\sandy 140001\1468\civil\drawings\c-500 ep.dwg

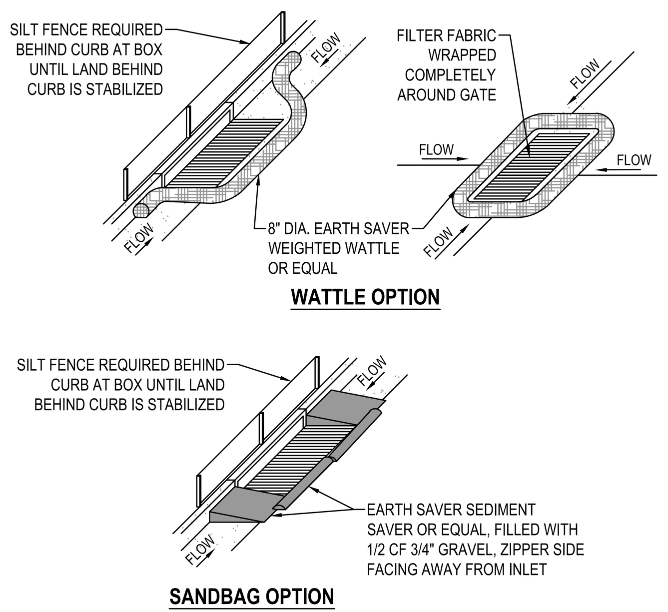

NOTES:

1. PLACE WATTLES OR GRAVEL BAGS TIGHT AGAINST CURB TO PREVENT SEDIMENT-LADEN WATER FROM GETTING BETWEEN CURB AND WATTLE/BAG.
2. PLACE WATTLES OR GRAVEL BAGS SUCH THAT FLOW DOES NOT OVERTOP CURB OR ROAD CENTERLINE.
3. INSPECT INLET PROTECTION AFTER EVERY LARGE STORM EVENT AND AT LEAST BI-WEEKLY, OR PER SWPPP REQUIREMENTS, WHICHEVER IS MORE STRINGENT, TO ENSURE THAT SEDIMENT CONTROL IS MEETING ITS DESIGN INTENT. MAINTAIN AND/OR REPLACE AS NEEDED.
4. REMOVE SEDIMENT ACCUMULATED WHEN IT REACHES 50% OF GRAVEL BAG OR WATTLE HEIGHT.
5. CONTRACTOR MAY SUBMIT AN ALTERNATIVE METHOD OF INLET PROTECTION. THE ALTERNATIVE METHOD SHALL BE APPROVED BY THE CITY INSPECTOR AND THE ENGINEER OF RECORD.
6. BEFORE PLACEMENT OF CURB, STABILIZATION OF LAND BEHIND CURB, AND/OR PAVING, MAINTAIN TOP OF INLET AT 6" ABOVE GRADE, AND SURROUND WITH SILT FENCE FOR SEDIMENTATION AROUND BOX. MAINTAIN SILT FENCE BEHIND BOX UNTIL LAND BEHIND CURB IS STABILIZED.

1 SAG INLET PROTECTION

SCALE: NONE

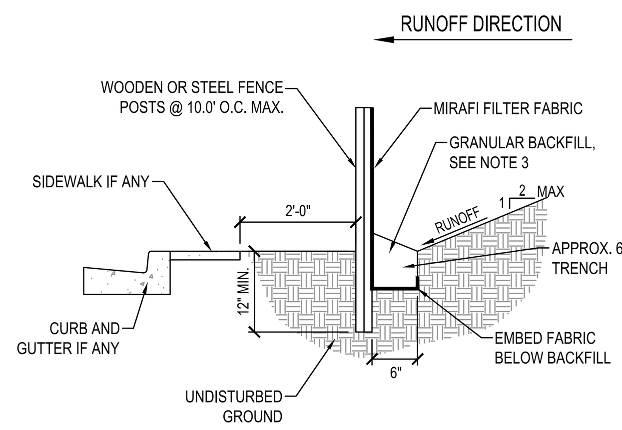

NOTES:

1. EXCAVATE 6"x6" TRENCH ALONG LIMITS OF DISTURBANCE AS SHOWN ON CONSTRUCTION DRAWINGS.
2. POSTS SHALL BE POSITIONED ON DOWNSTREAM SIDE OF FENCE.
3. LAY TOE-IN FABRIC FLAP IN BOTTOM OF TRENCH. BACKFILL TRENCH WITH FREE DRAINING GRANULAR MATERIAL. COMPACT TRENCH TO SATISFACTION OF THE ENGINEER OF RECORD.
4. SILT FENCE GEOTEXTILE SHALL MEET AASHTO M288-92 REQUIREMENTS.
5. REMOVE & DISPOSE OF SEDIMENT WHEN ACCUMULATION IS 50% OF EXPOSED FENCE HEIGHT.
6. 10' MAX. SPACING BETWEEN STAKES.
7. SILT FENCES SHALL BE INSTALLED ALONG CONTOURS, NOT UP AND DOWN SLOPES, WITH 10' OVERLAP AT BREAKS.

2 TEMPORARY SILT FENCE

SCALE: NONE

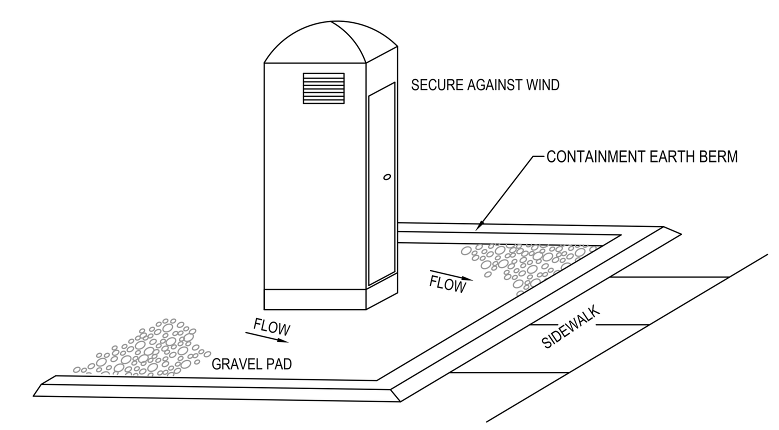

3 PORTABLE TOILET

SCALE: NONE

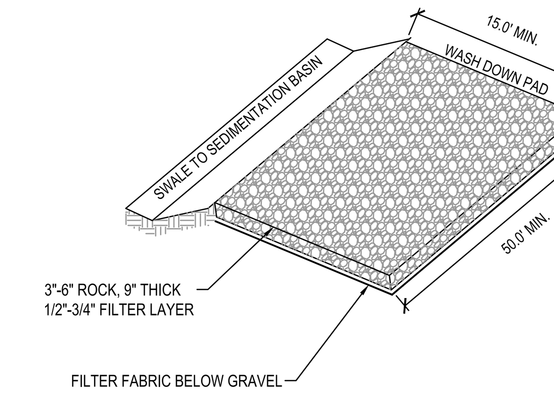

NOTE:

1. PLACE SIGN ADJACENT TO ENTRANCE " CONSTRUCTION TRAFFIC ONLY - ALL CONSTRUCTION TRAFFIC SHALL ENTER AND EXIT SITE AT THIS LOCATION"

4 STABILIZED CONSTRUCTION ENTRANCE

SCALE: NONE

ASPHALT NOTES

1. ALL PAVING TO BE PLACED OVER PROPERLY PREPARED NATURAL SOILS AND/OR PROPERLY PREPARED EXISTING FILL SOILS AND PROPERLY COMPACTED STRUCTURAL FILL WHERE SPECIFIED.
2. ALL STRUCTURAL FILL TO BE PLACED AND COMPACTED PER THE PROJECT GEOTECHNICAL REPORT OR TO A MINIMUM OF 95% OF THE MAXIMUM DRY DENSITY AS DETERMINED BY THE AASHTO T-180 (D-1557) METHOD OF COMPACTION. LIFTS SHOULD BE PLACED PER GEOTECHNICAL RECOMMENDATIONS BUT SHOULD NOT EXCEED 8" IN LOOSE THICKNESS.
3. REMOVE SURFACE VEGETATION AND OTHER DELETERIOUS MATERIALS OVER THE ENTIRE SITE IN PREPARATION OF PROPOSED IMPROVEMENTS.

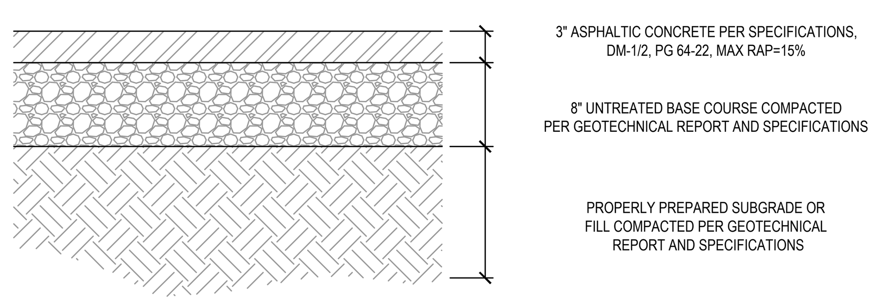

5 STANDARD ASPHALT SECTION

SCALE: NONE

ASPHALT NOTES

1. ALL PAVING TO BE PLACED OVER PROPERLY PREPARED NATURAL SOILS AND/OR PROPERLY PREPARED EXISTING FILL SOILS AND PROPERLY COMPACTED STRUCTURAL FILL WHERE SPECIFIED.
2. ALL STRUCTURAL FILL TO BE PLACED AND COMPACTED PER THE PROJECT GEOTECHNICAL REPORT OR TO A MINIMUM OF 95% OF THE MAXIMUM DRY DENSITY AS DETERMINED BY THE AASHTO T-180 (D-1557) METHOD OF COMPACTION. LIFTS SHOULD BE PLACED PER GEOTECHNICAL RECOMMENDATIONS BUT SHOULD NOT EXCEED 8" IN LOOSE THICKNESS.
3. REMOVE SURFACE VEGETATION AND OTHER DELETERIOUS MATERIALS OVER THE ENTIRE SITE IN PREPARATION OF PROPOSED IMPROVEMENTS.

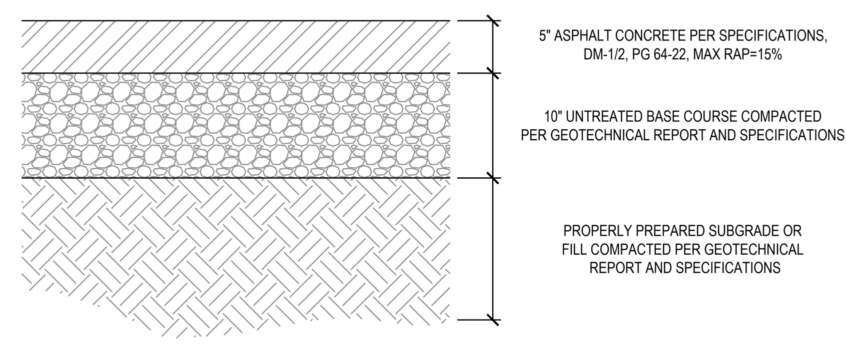

6 HEAVY-DUTY ASPHALT SECTION

SCALE: NONE

CONCRETE NOTES

1. ALL PAVING TO BE PLACED OVER PROPERLY PREPARED NATURAL SOILS AND/OR PROPERLY PREPARED EXISTING FILL SOILS AND PROPERLY COMPACTED STRUCTURAL FILL WHERE SPECIFIED.
2. ALL STRUCTURAL FILL TO BE PLACED AND COMPACTED PER THE PROJECT GEOTECHNICAL REPORT OR TO A MINIMUM OF 95% OF THE MAXIMUM DRY DENSITY AS DETERMINED BY THE AASHTO T-180 (D-1557) METHOD OF COMPACTION. LIFTS SHOULD BE PLACED PER GEOTECHNICAL RECOMMENDATIONS BUT SHOULD NOT EXCEED 8" IN LOOSE THICKNESS.
3. REMOVE SURFACE VEGETATION AND OTHER DELETERIOUS MATERIALS OVER THE ENTIRE SITE IN PREPARATION OF PROPOSED IMPROVEMENTS.

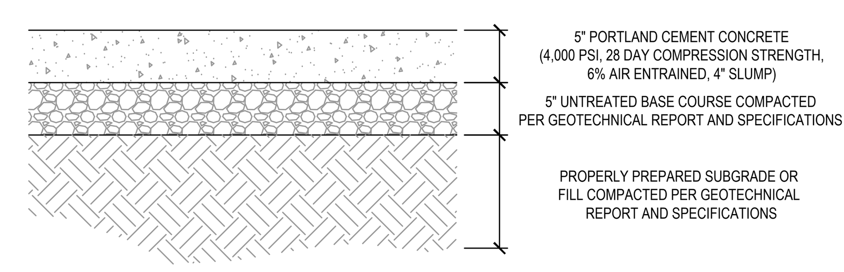

7 CONCRETE PAVEMENT SECTION

SCALE: NONE

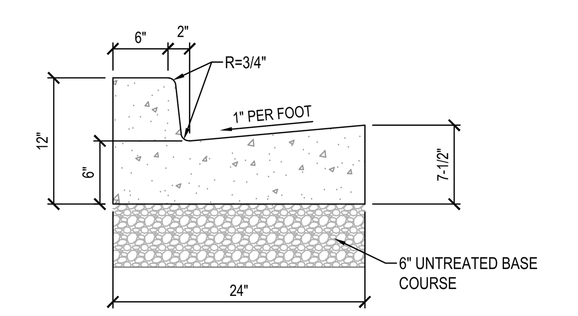

NOTE:

1. CONSTRUCT PER NOTES AND SPECIFICATIONS ASSOCIATED WITH APWA STANDARD PLAN NO. 205.

8 24" COLLECTION CURB AND GUTTER

SCALE: NONE

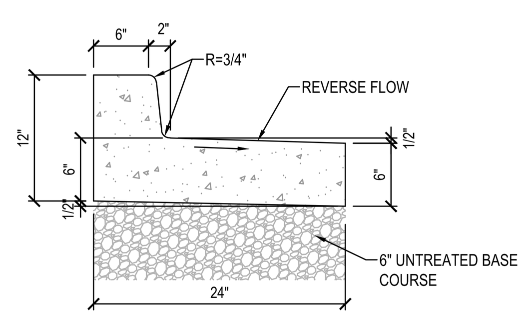

NOTE:

1. CONSTRUCT PER NOTES AND SPECIFICATIONS ASSOCIATED WITH APWA STANDARD PLAN NO. 205.

9 24" REVERSE PAN CURB AND GUTTER

SCALE: NONE

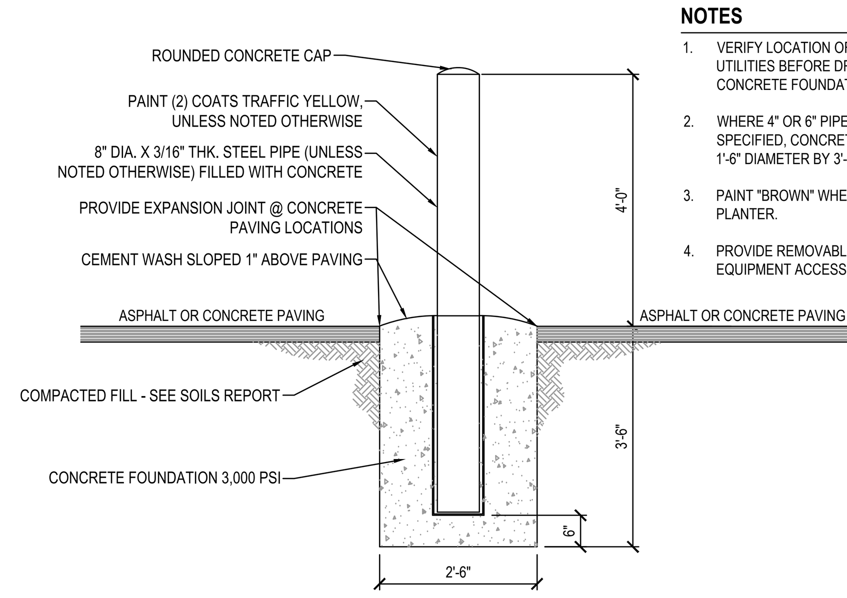

NOTES

1. VERIFY LOCATION OF UNDERGROUND UTILITIES BEFORE DRILLING FOR CONCRETE FOUNDATION.
2. WHERE 4" OR 6" PIPE BOLLARDS ARE SPECIFIED, CONCRETE BASES SHALL BE 1'-6" DIAMETER BY 3'-0" DEEP.
3. PAINT "BROWN" WHEN LOCATED IN PLANTER.
4. PROVIDE REMOVABLE PIPE BOLLARDS AT EQUIPMENT ACCESS PANELS AS REQUIRED.

10 BOLLARD

SCALE: NONE

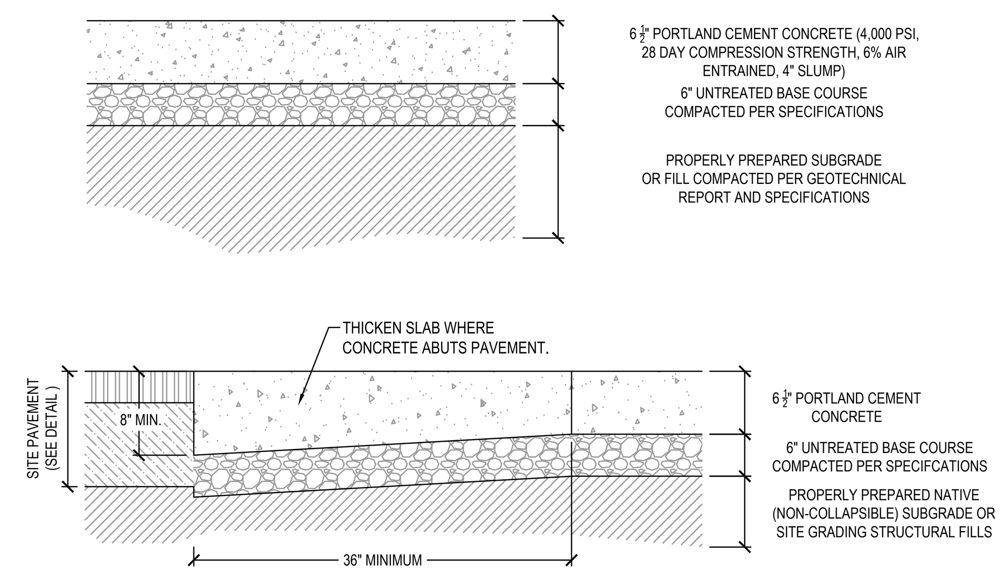

11 DUMPSTER PAD / APRON SECTION

SCALE: NONE

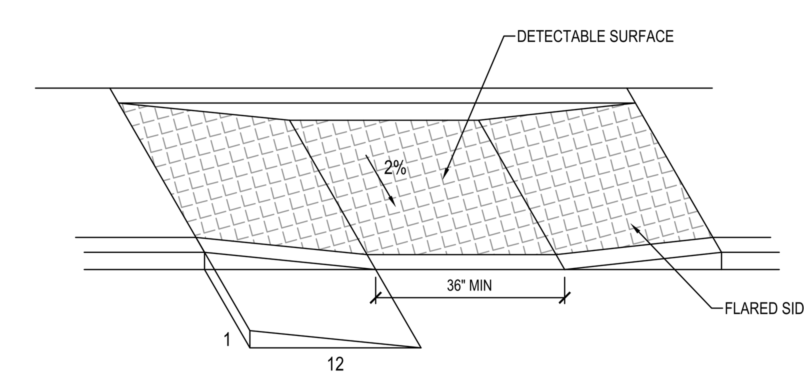

12 ACCESIBLE RAMP (ONSITE)

SCALE: NONE

CONCRETE NOTES

1. ALL PAVING TO BE PLACED OVER PROPERLY PREPARED NATURAL SOILS AND/OR PROPERLY PREPARED EXISTING FILL SOILS AND PROPERLY COMPACTED STRUCTURAL FILL WHERE SPECIFIED.
2. ALL STRUCTURAL FILL TO BE PLACED AND COMPACTED PER THE PROJECT GEOTECHNICAL REPORT OR TO A MINIMUM OF 95% OF THE MAXIMUM DRY DENSITY AS DETERMINED BY THE AASHTO T-180 (D-1557) METHOD OF COMPACTION. LIFTS SHOULD BE PLACED PER GEOTECHNICAL RECOMMENDATIONS BUT SHOULD NOT EXCEED 8" IN LOOSE THICKNESS.
3. REMOVE SURFACE VEGETATION AND OTHER DELETERIOUS MATERIALS OVER THE ENTIRE SITE IN PREPARATION OF PROPOSED IMPROVEMENTS.

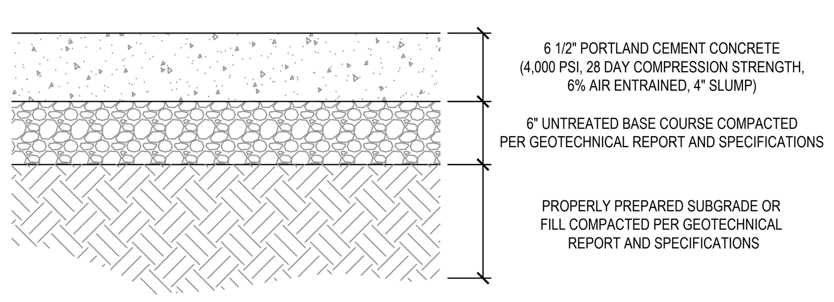

13 HEAVY-DUTY CONCRETE PAVEMENT SECTION

SCALE: NONE

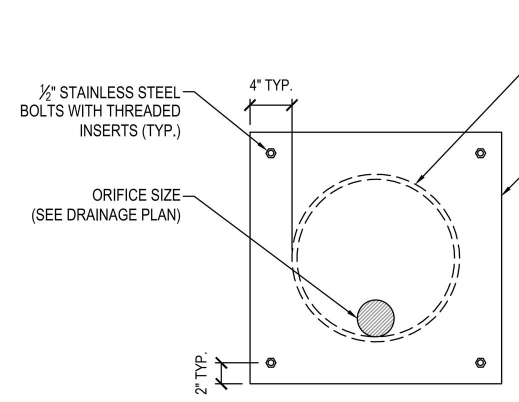

NOTES:

1. STEEL: USE ASTM A 36 STEEL.
2. BOLTS: USE 1/2 INCH STAINLESS STEEL BOLTS WITH 1/8 INCH STAINLESS STEEL WASHERS.
3. FINISH: HOT DIPPED GALVANIZED.

14 ORIFICE PLATE

SCALE: NONE

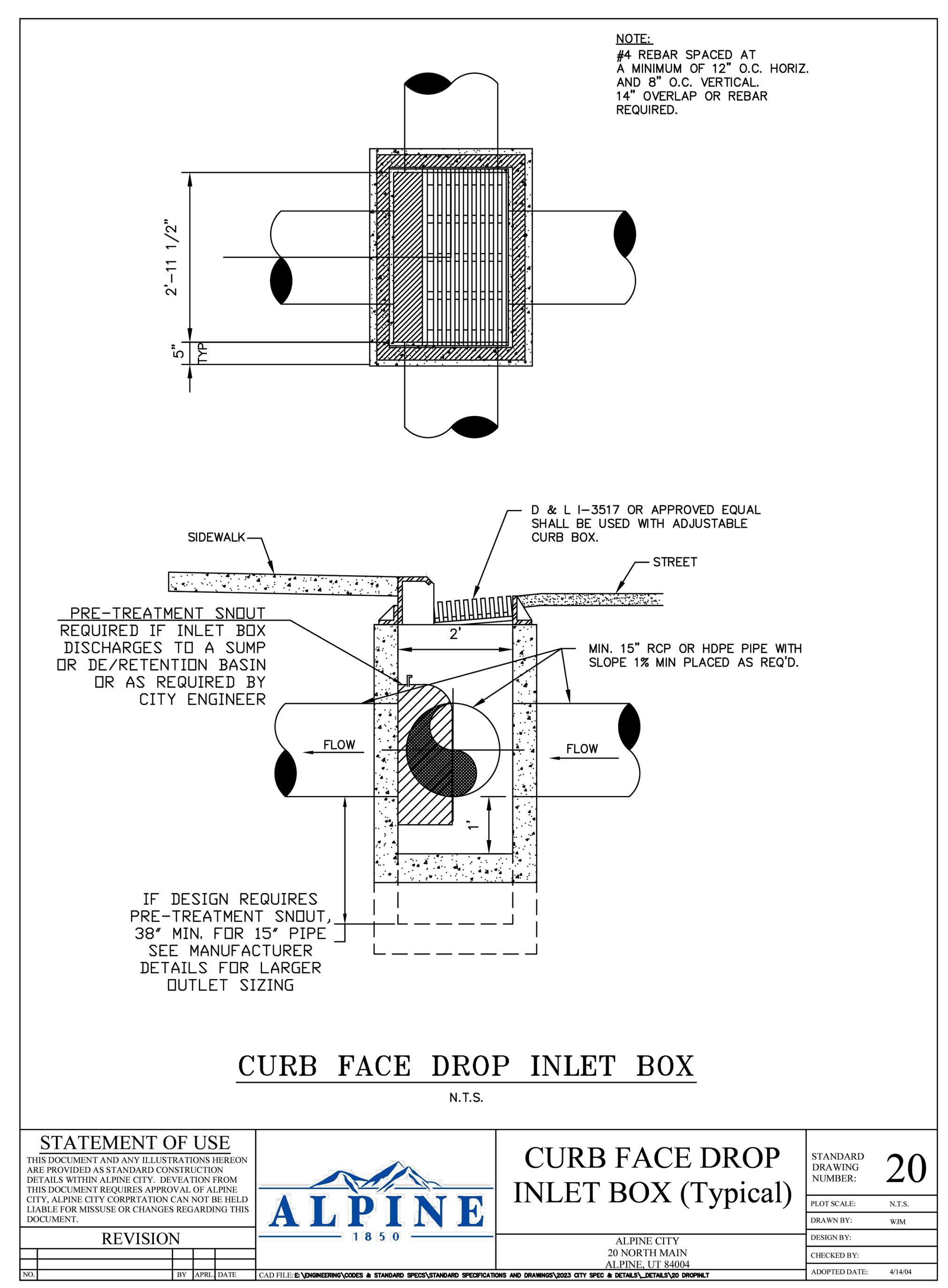

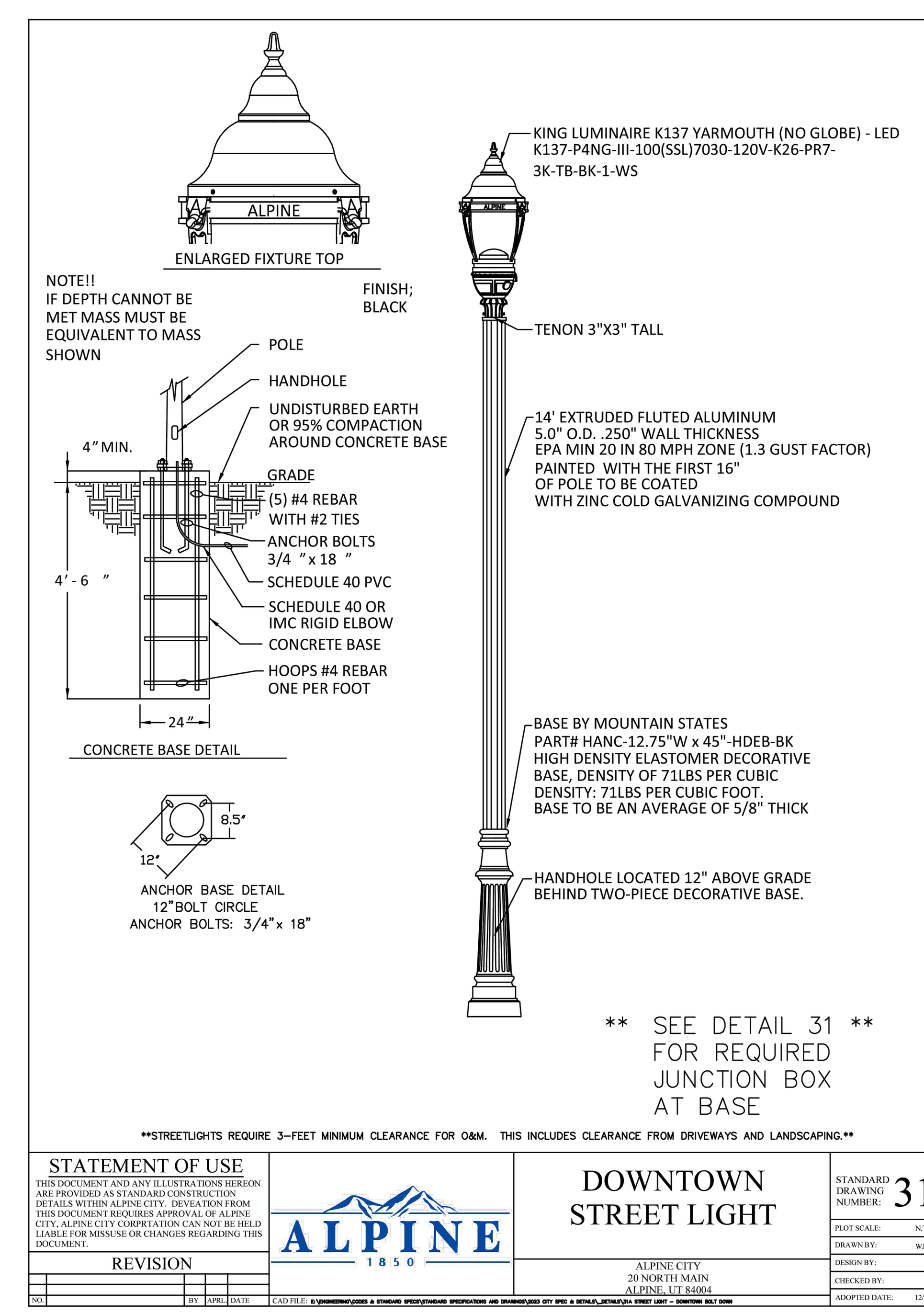

Current as of: 4/15/2026 1:38 PM

Original drawing is 30" x 42" z:\sandy\sandy 14000\14468\civil\drawings\c-600 dt.dwg

Babcock Design

Salt Lake City
52 Exchange Place
Salt Lake City, UT 84111
801.531.1144

Boise
800 W Main Street, Suite 940
Boise, ID 83702
208.424.7675

babcockdesign.com

Consultant

ENSIGN
THE STANDARD IN ENGINEERING

SANDY
45 W 10000 S, Suite 500
Sandy, UT 84070
Phone: 801.255.0529

ALPINE FIRE STATION

50 E 100 N ALPINE, UT 84004

Revisions

Num.	Description	Date

Project Number	25116
Original Issue	4/16/2026
Project Status	CD

The information and content represented herein is considered by law the architect's instruments of service and are the property of Babcock Design. They are available for limited review and evaluation by clients, consultants, contractors, government agencies, vendors, and office personnel only in accordance with this notice. They are intended for use only for the project specified and are to be used for no other purpose or project including additions to or modification of the completed project. No part thereof may be copied, reproduced, photographed, modified, published, uploaded, transmitted, disclosed, sold, distributed to others in any way including in digital form, or otherwise used without the prior written consent of Babcock Design.

COPYRIGHT © 2025 BABCOCK DESIGN

Stamp

LICENSED PROFESSIONAL ENGINEER
04/15/2026
No. 9125581-2202
MICHAEL S. BUDGE
STATE OF UTAH

Sheet Title

DETAILS

Sheet Number

C-600

PROPOSED LAYOUT		CONCEPTUAL ELEVATIONS	
73	STORMTECH SC-310 CHAMBERS	MAXIMUM ALLOWABLE GRADE (TOP OF PAVEMENT/UNPAVED):	4961.83
14	STORMTECH SC-310 END CAPS	MINIMUM ALLOWABLE GRADE (UNPAVED WITH TRAFFIC):	4955.67
6	STONE ABOVE (in)	MINIMUM ALLOWABLE GRADE (UNPAVED NO TRAFFIC):	4955.17
6	STONE BELOW (in)	MINIMUM ALLOWABLE GRADE (TOP OF RIGID CONCRETE PAVEMENT):	4955.17
40	STONE VOID	MINIMUM ALLOWABLE GRADE (BASE OF FLEXIBLE PAVEMENT):	4955.17
2411	INSTALLED SYSTEM VOLUME (CF) (PERIMETER STONE INCLUDED) (COVER STONE INCLUDED) (BASE STONE INCLUDED)	TOP OF STONE:	4954.33
		TOP OF SC-310 CHAMBER:	4953.83
		8" x 8" TOP MANIFOLD INVERT:	4952.70
		12" ISOLATOR ROW PLUS INVERT:	4952.67
1891	SYSTEM AREA (SF)	BOTTOM OF SC-310 CHAMBER:	4952.50
216.3	SYSTEM PERIMETER (ft)	BOTTOM OF STONE:	4952.00

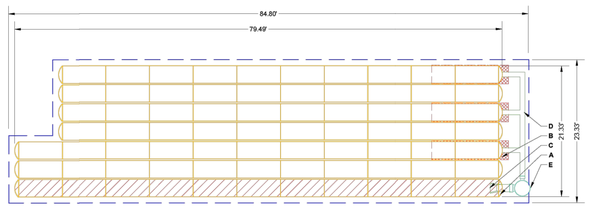

ISOLATOR ROW PLUS (SEE DETAIL)

PLACE MINIMUM 12.50' OF ADSPLUS625 WOVEN GEOTEXTILE OVER BEDDING STONE AND UNDERNEATH CHAMBER FEET FOR SCOUR PROTECTION AT ALL CHAMBER INLET ROWS

BED LIMITS

NOTES

1. THE SITE DESIGN ENGINEER MUST REVIEW ELEVATIONS AND IF NECESSARY ADJUST GRADING TO ENSURE THE CHAMBER COVER REQUIREMENTS ARE MET.
2. **NOT FOR CONSTRUCTION**: THIS LAYOUT IS FOR DIMENSIONAL PURPOSES ONLY TO PROVE CONCEPT & THE REQUIRED STORAGE VOLUME CAN BE ACHIEVED ON SITE.

3 SC-310 ISOLATOR ROW PLUS DETAIL

SPACE INTENTIONALLY LEFT BLANK

*INVERT ABOVE BASE OF CHAMBER

PART TYPE	ITEM ON LAYOUT	DESCRIPTION	INVERT*	MAX FLOW
PREFABRICATED EZ END CAP	A	12" BOTTOM PREFABRICATED EZ END CAP. PART#: SC310ECEZ / TYP OF ALL 12" BOTTOM CONNECTIONS AND ISOLATOR PLUS ROWS	0.90"	
PRE-CORED END CAP	B	8" TOP PRE-CORED END CAP. PART#: SC310EPE08TPC / TYP OF ALL 8" TOP CONNECTIONS	3.50"	
FLAMP	C	INSTALL FLAMP ON 12" ACCESS PIPE / PART#: SC31012RAMP		
MANIFOLD	D	8" x 8" TOP MANIFOLD, MOLDED FITTINGS	3.50"	
NYLOPLAST (INLET W/ ISO PLUS ROW)	E	30" DIAMETER (24.00" SUMP MIN)		2.3 CFS IN

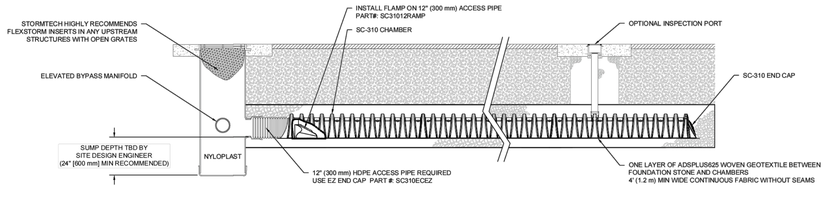

SC-310 ISOLATOR ROW PLUS DETAIL
NTS

SPACE INTENTIONALLY LEFT BLANK

SC-310 TECHNICAL SPECIFICATION
NTS

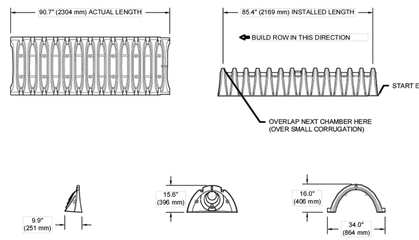

NOMINAL CHAMBER SPECIFICATIONS

SIZE (W X H X INSTALLED LENGTH)	34.0" X 16.0" X 85.4"	(864 mm X 406 mm X 2169 mm)
CHAMBER STORAGE	14.7 CUBIC FEET	-- - - - **********
MINIMUM INSTALLED STORAGE*	29.3 CUBIC FEET	-- - - - **********
WEIGHT	35.0 lbs.	(16.8 kg)

*ASSUMES 6" (152 mm) ABOVE, BELOW, AND 3" (75 mm) BETWEEN CHAMBERS

PART #	STUB	B	C
SC310EPE06TPC	6" (150 mm)	5.8" (147 mm)	---
SC310EPE06BPC		---	0.5" (13 mm)
SC310EPE08TPC	8" (200 mm)	3.5" (89 mm)	---
SC310EPE08BPC		---	0.6" (15 mm)
SC310EPE10TPC	10" (250 mm)	1.4" (36 mm)	---
SC310EPE10BPC		---	0.7" (18 mm)
SC310ECEZ*	12" (300 mm)	---	0.9" (23 mm)

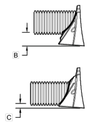

ALL STUBS, EXCEPT FOR THE SC310ECEZ ARE PLACED AT BOTTOM OF END CAP SUCH THAT THE OUTSIDE DIAMETER OF THE STUB IS FLUSH WITH THE BOTTOM OF THE END CAP. FOR ADDITIONAL INFORMATION CONTACT STORMTECH AT 1-888-892-2694.

* FOR THE SC310ECEZ THE 12" (300 mm) STUB LIES BELOW THE BOTTOM OF THE END CAP APPROXIMATELY 0.25" (6 mm). BACKFILL MATERIAL SHOULD BE REMOVED FROM BELOW THE N-12 STUB SO THAT THE FITTING SITS LEVEL.

NOTE: ALL DIMENSIONS ARE NOMINAL; PRE-CORED END CAPS END WITH "PC"

2 SC-310 TECHNICAL SPECIFICATION

SPACE INTENTIONALLY LEFT BLANK

ACCEPTABLE FILL MATERIALS: STORMTECH SC-310 CHAMBER SYSTEMS

	MATERIAL LOCATION	DESCRIPTION	AASHTO MATERIAL CLASSIFICATIONS	COMPACTION / DENSITY REQUIREMENT
D	**FINAL FILL:** FILL MATERIAL FOR LAYER 'D' STARTS FROM THE TOP OF THE 'C' LAYER TO THE BOTTOM OF FLEXIBLE PAVEMENT OR UNPAVED FINISHED GRADE ABOVE. NOTE THAT PAVEMENT SUBBASE MAY BE PART OF THE 'D' LAYER.	ANY SOIL/ROCK MATERIALS, NATIVE SOILS, OR PER ENGINEER'S PLANS. CHECK PLANS FOR PAVEMENT SUBGRADE REQUIREMENTS.	N/A	PREPARE PER SITE DESIGN ENGINEER'S PLANS. PAVED INSTALLATIONS MAY HAVE STRINGENT MATERIAL AND PREPARATION REQUIREMENTS.
C	**INITIAL FILL:** FILL MATERIAL FOR LAYER 'C' STARTS FROM THE TOP OF THE EMBEDMENT STONE ('B' LAYER) TO **18" (450 mm)** ABOVE THE TOP OF THE CHAMBER. NOTE THAT PAVEMENT SUBBASE MAY BE A PART OF THE 'C' LAYER.	GRANULAR WELL-GRADED SOIL/AGGREGATE MIXTURES, <35% FINES OR PROCESSED AGGREGATE. MOST PAVEMENT SUBBASE MATERIALS CAN BE USED IN LIEU OF THIS LAYER.	AASHTO M145= A-1, A-2-4, A-3 OR AASHTO M43= 3, 357, 4, 467, 5, 56, 57, 6, 67, 68, 7, 78, 8, 89, 9, 10	BEGIN COMPACTIONS AFTER 12" (300 mm) OF MATERIAL OVER THE CHAMBERS IS REACHED. COMPACT ADDITIONAL LAYERS IN 6" (150 mm) MAX LIFTS TO A MIN. 95% PROCTOR DENSITY FOR WELL GRADED MATERIAL AND 95% RELATIVE DENSITY FOR PROCESSED AGGREGATE MATERIALS. ROLLER GROSS VEHICLE WEIGHT NOT TO EXCEED 12,000 lbs (53 kN). DYNAMIC FORCE NOT TO EXCEED 20,000 lbs (89 kN).
B	**EMBEDMENT STONE:** FILL SURROUNDING THE CHAMBERS FROM THE FOUNDATION STONE ('A' LAYER) TO THE 'C' LAYER ABOVE.	CLEAN, CRUSHED, ANGULAR STONE OR RECYCLED CONCRETES	AASHTO M43= 3, 357, 4, 467, 5, 56, 57	NO COMPACTION REQUIRED.
A	**FOUNDATION STONE:** FILL BELOW CHAMBERS FROM THE SUBGRADE UP TO THE FOOT (BOTTOM) OF THE CHAMBER.	CLEAN, CRUSHED, ANGULAR STONE OR RECYCLED CONCRETES	AASHTO M43= 3, 357, 4, 467, 5, 56, 57	PLATE COMPACT OR ROLL TO ACHIEVE A FLAT SURFACE[2,3]

PLEASE NOTE:
1. THE LISTED AASHTO DESIGNATIONS ARE FOR GRADATIONS ONLY. THE STONE MUST ALSO BE CLEAN, CRUSHED, ANGULAR. FOR EXAMPLE, A SPECIFICATION FOR #4 STONE WOULD STATE: "CLEAN, CRUSHED, ANGULAR NO. 4 (AASHTO M43) STONE".
2. STORMTECH COMPACTION REQUIREMENTS ARE MET FOR 'A' LOCATION MATERIALS WHEN PLACED AND COMPACTED IN 6" (150 mm) (MAX) LIFTS USING TWO FULL COVERAGES WITH A VIBRATORY COMPACTOR.
3. WHERE INFILTRATION SURFACES MAY BE COMPROMISED BY COMPACTION, FOR STANDARD DESIGN LOAD CONDITIONS, A FLAT SURFACE MAY BE ACHIEVED BY RAKING OR DRAGGING WITHOUT COMPACTION EQUIPMENT. FOR SPECIAL LOAD DESIGNS, CONTACT STORMTECH FOR COMPACTION REQUIREMENTS.
4. ONCE LAYER 'C' IS PLACED, ANY SOIL/MATERIAL CAN BE PLACED IN LAYER 'D' UP TO THE FINISHED GRADE. MOST PAVEMENT SUBBASE SOILS CAN BE USED TO REPLACE THE MATERIAL REQUIREMENTS OF LAYER 'C' OR 'D' AT THE SITE DESIGN ENGINEER'S DISCRETION.
5. WHERE RECYCLED CONCRETE AGGREGATE IS USED IN LAYERS 'A' OR 'B' THE MATERIAL SHOULD ALSO MEET THE ACCEPTABILITY CRITERIA OUTLINED IN TECHNICAL NOTE 6.20 "RECYCLED CONCRETE STRUCTURAL BACKFILL".

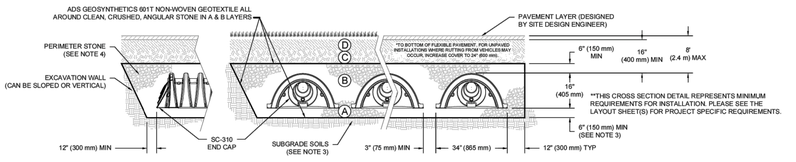

NOTES:

1. CHAMBERS SHALL MEET THE REQUIREMENTS OF ASTM F2922 (POLETHYLENE) OR ASTM F2418 (POLYPROPYLENE), "STANDARD SPECIFICATION FOR CORRUGATED WALL STORMWATER COLLECTION CHAMBERS".
2. SC-310 CHAMBERS SHALL BE DESIGNED IN ACCORDANCE WITH ASTM F2787 "STANDARD PRACTICE FOR STRUCTURAL DESIGN OF THERMOPLASTIC CORRUGATED WALL STORMWATER COLLECTION CHAMBERS".
3. THE SITE DESIGN ENGINEER IS RESPONSIBLE FOR ASSESSING THE BEARING RESISTANCE (ALLOWABLE BEARING CAPACITY) OF THE SUBGRADE SOILS AND THE DEPTH OF FOUNDATION STONE WITH CONSIDERATION FOR THE RANGE OF EXPECTED SOIL MOISTURE CONDITIONS. REFERENCE STORMTECH DESIGN MANUAL FOR BEARING CAPACITY GUIDANCE.
4. PERIMETER STONE MUST BE EXTENDED HORIZONTALLY TO THE EXCAVATION WALL FOR BOTH VERTICAL AND SLOPED EXCAVATION WALLS.
5. REQUIREMENTS FOR HANDLING AND INSTALLATION:
   - TO MAINTAIN THE WIDTH OF CHAMBERS DURING SHIPPING AND HANDLING, CHAMBERS SHALL HAVE INTEGRAL, INTERLOCKING STACKING LUGS.
   - TO ENSURE THE INTEGRITY OF THE ARCH SHAPE DURING INSTALLATION, a) THE ARCH STIFFNESS CONSTANT SHALL BE GREATER THAN OR EQUAL TO 325 LBS/FT/% . THE ASC IS DEFINED IN SECTION
   OR YELLOW COLORS.

1 SC-310 CROSS SECTION DETAIL

INSPECTION & MAINTENANCE

STEP 1) INSPECT ISOLATOR ROW PLUS FOR SEDIMENT
- A. INSPECTION PORTS (IF PRESENT)
  - A.1. REMOVE/OPEN LID ON NYLOPLAST INLINE DRAIN
  - A.2. REMOVE AND CLEAN FLEXSTORM FILTER IF INSTALLED
  - A.3. USING A FLASHLIGHT AND STADIA ROD, MEASURE DEPTH OF SEDIMENT AND RECORD ON MAINTENANCE LOG
  - A.4. LOWER A CAMERA INTO ISOLATOR ROW PLUS FOR VISUAL INSPECTION OF SEDIMENT LEVELS (OPTIONAL)
  - A.5. IF SEDIMENT IS AT, OR ABOVE, 3" (80 mm) PROCEED TO STEP 2. IF NOT, PROCEED TO STEP 3.
- B. ALL ISOLATOR PLUS ROWS
  - B.1. REMOVE COVER FROM STRUCTURE AT UPSTREAM END OF ISOLATOR ROW PLUS
  - B.2. USING A FLASHLIGHT, INSPECT DOWN THE ISOLATOR ROW PLUS THROUGH OUTLET PIPE
    - i) MIRRORS ON POLES OR CAMERAS MAY BE USED TO AVOID A CONFINED SPACE ENTRY
    - ii) FOLLOW OSHA REGULATIONS FOR CONFINED SPACE ENTRY IF ENTERING MANHOLE
  - B.3. IF SEDIMENT IS AT, OR ABOVE, 3" (80 mm) PROCEED TO STEP 2. IF NOT, PROCEED TO STEP 3.

STEP 2) CLEAN OUT ISOLATOR ROW PLUS USING THE JETVAC PROCESS
- A. A FIXED CULVERT CLEANING NOZZLE WITH REAR FACING SPREAD OF 45° (1.1 m) OR MORE IS PREFERRED
- B. APPLY MULTIPLE PASSES OF JETVAC UNTIL BACKFLUSH WATER IS CLEAN
- C. VACUUM STRUCTURE SUMP AS REQUIRED

STEP 3) REPLACE ALL COVERS, GRATES, FILTERS, AND LIDS; RECORD OBSERVATIONS AND ACTIONS.

STEP 4) INSPECT AND CLEAN BASINS AND MANHOLES UPSTREAM OF THE STORMTECH SYSTEM.

NOTES

1. INSPECT EVERY 6 MONTHS DURING THE FIRST YEAR OF OPERATION. ADJUST THE INSPECTION INTERVAL BASED ON PREVIOUS OBSERVATIONS OF SEDIMENT ACCUMULATION AND HIGH WATER ELEVATIONS.
2. CONDUCT JETTING AND VACTORING ANNUALLY OR WHEN INSPECTION SHOWS THAT MAINTENANCE IS NECESSARY.

SPACE INTENTIONALLY LEFT BLANK

DRAWN: TP | DATE: 01/06/2026
CHECKED: N/A | PROJECT #:
REV: | NOT TO SCALE

14468 ALPINE FIRE STATION
ALPINE, UT, USA

StormTech® Chamber System

4640 TRUEMAN BLVD
HILLIARD, OH 43026
1-800-733-7473

ADS

SHALL REVIEW THIS DRAWING PRIOR TO BIDDING AND/OR CONSTRUCTION. IT IS THE ULTIMATE RESPONSIBILITY OF THE EOR TO ENSURE THAT THE PRODUCT(S) DEPICTED AND ALL ASSOCIATED DETAILS MEET ALL APPLICABLE LAWS, REGULATIONS, AND PROJECT REQUIREMENTS.

SHEET
1 OF 1

Babcock Design

Salt Lake City
52 Exchange Place
Salt Lake City, UT 84111
801.531.1144

Boise
800 W Main Street, Suite 940
Boise, ID 83702
208.424.7675

babcockdesign.com

Consultant

ENSIGN
THE STANDARD IN ENGINEERING

SANDY
45 W 10000 S. Suite 500
Sandy, UT 84070
Phone: 801.255.0529

ALPINE FIRE STATION

50 E 100 N ALPINE, UT 84004

Revisions

Num.	Description	Date

Project Number	25116
Original Issue	4/16/2026
Project Status	CD

The information and content represented herein is considered by law the architect's instruments of service and are the property of Babcock Design. They are available for limited review and reference by clients, consultants, contractors, government agencies, vendors, and office personnel only in accordance with this notice. They are intended for use only for the project specified and are to be used for no other purpose or project including additions to or modification of the completed project. No part thereof may be copied, reproduced, photographed, modified, published, uploaded, transmitted, disclosed, sold, distributed to others in any way including in digital form, or otherwise used without the prior written consent of Babcock Design.

COPYRIGHT © 2025 BABCOCK DESIGN

Stamp

LICENSED PROFESSIONAL ENGINEER
04/15/2026
No. 9125581-2202
MICHAEL S. BUDGE
STATE OF UTAH

Sheet Title

DETAILS

Sheet Number

C-601

Current as of: 4/15/2026 1:39 PM

Original drawing is 30" x 42" z:\sandy\sandy 14000\14468\civil\drawings\c-601.dwg

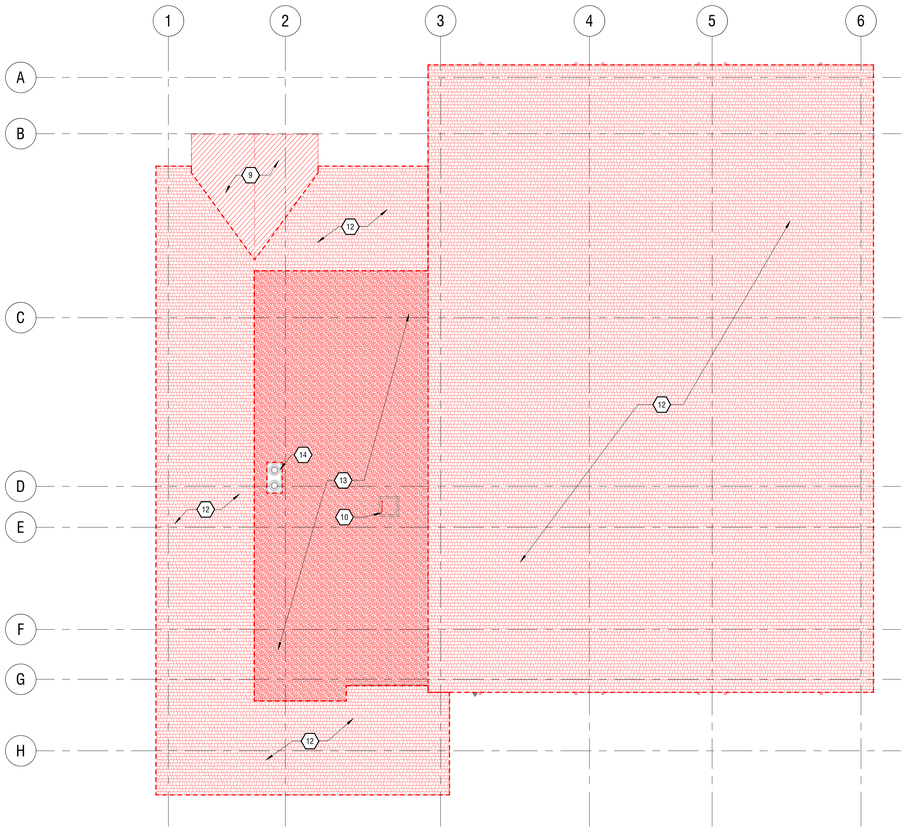

3 LEVEL ROOF - ROOF PLAN DEMO
1/8" = 1'-0"

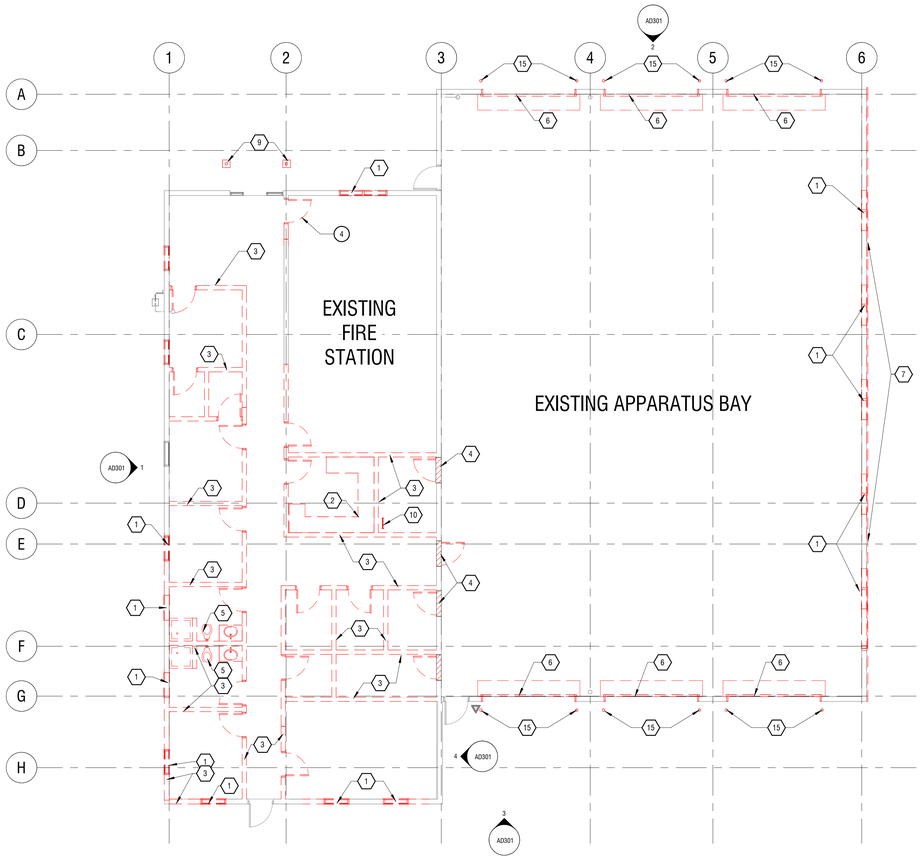

1 LEVEL 1 - FLOOR PLAN DEMO
1/8" = 1'-0"

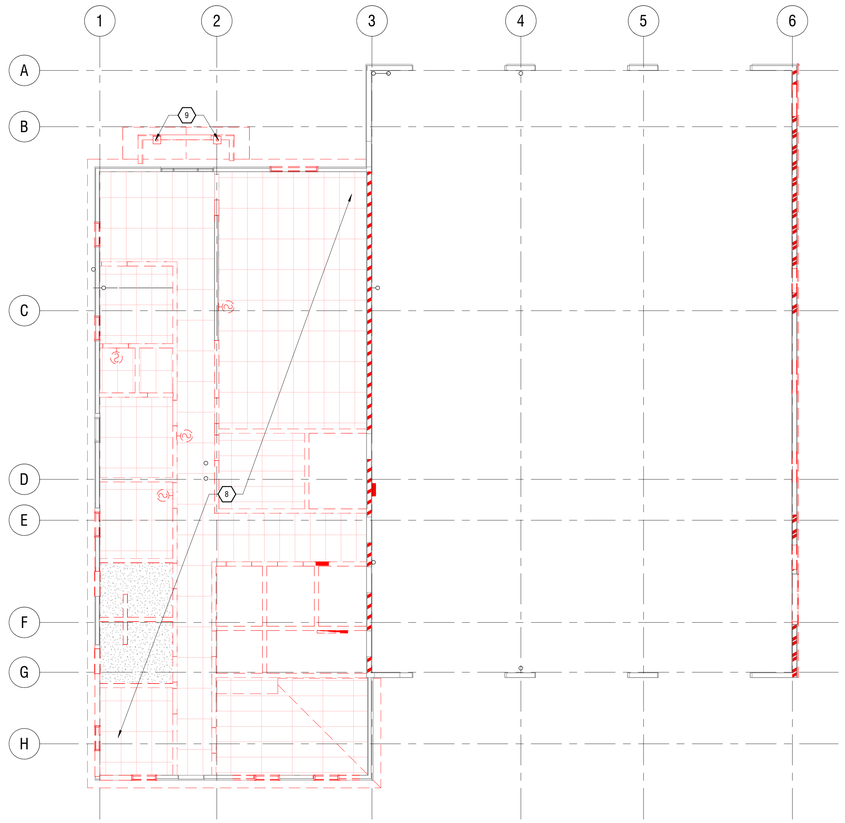

2 LEVEL 1 - REFLECTED CEILING PLAN DEMO
1/8" = 1'-0"

DEMOLITION GENERAL NOTES

1. IDENTIFY AND FIELD VERIFY ALL EXISTING CONDITIONS AND COORDINATE SCOPE OF PROJECT W/ ARCHITECT PRIOR TO STARTING ANY WORK. STOP WORK AND CONTACT ARCHITECT IMMEDIATELY IF HIDDEN OR UNKNOWN ELEMENTS AND CONCERNS ARE REVEALED OR EXPOSED DURING DEMOLITION.
2. COORDINATE ALL DEMOLITION WORK WITH MECHANICAL AND ELECTRICAL DRAWINGS, REQUIREMENTS, AND NOTES. PROVIDE PROPER BRACING AND SUPPORT OF EXISTING STRUCTURE WHERE REQUIRED.
3. DEMOLITION PLANS ARE PROVIDED TO INDICATE A GENERAL SCOPE ONLY. ITEMS TO BE REMOVED ARE INDICATED ON DEMOLITION PLANS WITH A DOTTED OR BROKEN LINE INCLUDING BUT NOT LIMITED TO INTERIOR PARTITIONS, CEILINGS, DOORS AND FRAMES, EQUIPMENT, ELEMENTS, COMPONENTS, CABINETRY AND ACCESSORIES, ETC. POCHE IS INTENDED TO INDICATE THE REMOVAL OF EXISTING SLAB TO BE REMOVED.
4. THE CONTRACTOR SHALL BE RESPONSIBLE FOR COORDINATING DEMOLITION WITH THE REQUIREMENTS OF ALL PORTIONS OF THE CONSTRUCTION DOCUMENTS AND SHALL PERFORM DEMOLITION AS SHOWN AND/OR NECESSARY TO COMPLETE THE REQUIRED RENOVATION AND NEW CONSTRUCTION. THE ABSENCE ON THE DEMOLITION PLANS OF ITEMS NOTED OR INDICATED DOES NOT RELIEVE THE GENERAL CONTRACTOR OF THE RESPONSIBILITY TO DEMOLISH THESE ITEMS, IF NECESSARY, TO COMPLETE NEW WORK. COORDINATE W/ ARCHITECT AS REQ.
5. COORDINATE DEMOLITION WITH ORIGINAL STRUCTURAL DRAWINGS TO MAINTAIN STRUCTURAL INTEGRITY OF BUILDING. BRING ANY CONFLICT TO THE ATTENTION OF ARCHITECT AND STRUCTURAL ENGINEER PRIOR TO CONTINUATION OF WORK.
6. GENERAL SCOPE OF DEMOLITION WORK REQUIRED MUST BE COORDINATED WITH THE NEW CONSTRUCTION DRAWINGS.
7. UNLESS NOTED OTHERWISE, INTERIOR PARTITIONS AND WALLS WHICH ARE TO BE DEMOLISHED SHALL BE REMOVED FROM FLOOR TO UNDERSIDE OF STRUCTURE ABOVE.
8. ALL EXISTING DOORS, HARDWARE, AND FRAMES MARKED FOR BEING REMOVED ARE TO BE SALVAGED AND REUSED WHEN AND WHERE POSSIBLE. REPAIR EXISTING DOORS TO "LIKE-NEW" CONDITION AND PREP./REPAINT EXISTING FRAMES TO MATCH NEW FINISHES. CONTRACTOR TO VERIFY EXISTING DOOR AND HARDWARE CONDITION AND FUNCTION, AND TO DETERMINE PROPER LOCATION IN NEW DESIGN TO REINSTALL/REUSE. COORDINATED WITH DOOR SCHEDULE. PROPERLY MODIFY AND/OR PREPARE OPENINGS IN EXISTING WALLS AS NECESSARY TO RECEIVE DOOR AND FRAME.
9. CONTRACTOR TO VERIFY THE CONDITION OF ITEMS SHOWN ON THE DRAWINGS TO BE REUSED AND/OR RELOCATED AND REPAIR TO "LIKE-NEW" CONDITION AS NECESSARY. THESE ITEMS SHALL BE PROTECTED FROM DAMAGE, THEFT, AND/OR ABUSE BY THE CONTRACTOR. SALVAGED ITEMS THAT ARE REFINISHED AND REINSTALLED IN THEIR NEW LOCATION SHALL BE PROTECTED FROM WORK ONGOING IN ADJACENT AREAS.
10. CONTRACTOR TO VERIFY LOCATION OF ALL EXISTING UTILITIES TO BE REMOVED, RELOCATED OR ABANDONED PRIOR TO COMMENCING DEMOLITION ACTIVITIES.
11. THE CONTRACTOR SHALL COORDINATE WORK ASSOCIATED WITH THE REMOVAL, RELOCATION OR ABANDONMENT OF UTILITIES WITH THE UTILITY COMPANY OR ENTITY HAVING OWNERSHIP OF EACH RESPECTIVE UTILITY. COSTS FOR DISCONNECTION, REMOVAL, AND/OR RELOCATION OF EXISTING UTILITIES AS SHOWN ON THE DRAWINGS OR AS NECESSARY TO ALLOW FOR THE EXECUTION OF THE WORK SHALL BE PAID BY THE CONTRACTOR.
12. PROVIDE TEMPORARY SHORING AND BRACING AS REQUIRED WHENEVER BEARING WALLS, STRUCTURES, OR SUPPORTS ARE MODIFIED.
13. NO OPEN BURNING SHALL BE PERMITTED ON THE SITE.
14. ALL DEMOLISHED MATERIALS SHALL BECOME THE PROPERTY OF THE CONTRACTOR AND SHALL BE LEGALLY DISPOSED OF OFF-SITE UNLESS OTHERWISE SHOWN.
15. TERMINAL ENDS OF UTILITIES ABANDONED IN-PLACE SHALL BE CUT, CAPPED, AND PLUGGED. THE ENDS OF DISCONNECTED UTILITIES SHALL BE MARKED FOR FUTURE IDENTIFICATION WITH DETECTABLE LOCATOR TAPE OR A METAL ROD.
16. WHERE ELECTRICAL NEEDS TO BE ABANDONED, REMOVE WIRE FROM OUTLET ALL THE WAY BACK TO THE ELECTRICAL PANEL / SOURCE. ALL WORK SHALL BE DONE BY A LICENSED ELECTRICIAN.
17. WHERE PLUMBING NEEDS TO BE ABANDONED, REMOVE ALL VENT STACK PIPE & ROOF PENETRATION. REMOVE ALL OVERHEAD WATER LINES BACK TO POINT OF ENTRY (CAREFULLY VERIFY IF ANY LINES CAN BE RE-UTILIZED AS PART OF NEW BUILD OUT). MAKE SURE ALL WATER HAS BEEN TURNED OFF PRIOR TO WORK. ALL WORK SHALL BE DONE BY A LICENSED PLUMBER.
18. WHERE GAS LINES OR SERVICE NEEDS TO BE ABANDONED, CAREFULLY REMOVE ALL PIPING, SHUT-OFF VALVES & FITTING AS REQUIRED. GAS METER REGULATOR SHALL BE REMOVED BY UTILITY COMPANY. ALL WORK SHALL BE DONE BY A LICENSED SUB-CONTRACTOR.
19. WHERE VENTILATION OR AIR CONDITIONING NEEDS TO BE ABANDONED, REMOVE ALL EXHAUST & OUTSIDE AIR DUCTS AS REQUIRED. ROOF-TOP FANS SHALL BE REMOVED & THE OPENINGS DRIED-IN TO PREVENT ANY WATER PENETRATION IN THE SPACE. ALL WORK SHALL BE DONE BY A LICENSED CONTRACTOR.
20. EXISTING MILLWORK NOT MARKED FOR DEMOLITION IS TO REMAIN; CONTRACTOR SHALL REPAIR ALL HARDWARE AS NECESSARY TO ENSURE THAT EXISTING MILLWORK IS IN "LIKE-NEW" CONDITION.
21. ALL EXISTING WALL COVERINGS ON WALLS TO BE SALVAGED SHOULD BE REMOVED, SKIM COAT, PATCH, REPAIR AS NEEDED TO PREPARE FOR NEW FINISH.
22. DEMO TO BASE SUBSTRATE. PROTECT FINISHES NOT INVOLVED IN DEMOLITION. PATCH AND REPAIR ALL EXISTING FINISHES OF WALLS, CEILINGS, FLOORS, OR SURFACES THAT ARE EXPOSED OR DAMAGED DURING DEMOLITION. MATCH EXISTING AND/OR PROVIDE NEW FINISHES AS REQUIRED.
23. CONTRACTOR SHALL COORDINATE THE REMOVAL OF ALL CARPET WITH THE FINISHED FLOOR PLAN. CARPET IN SPACES LISTED AS N.I.C. SHALL NOT BE DISTURBED UNLESS DIRECTED BY THE BUILDING OWNER OR ARCHITECT.

SHEET NOTES - DEMO

NOTE: THESE NOTES APPLY TO THIS SHEET ONLY.

1. REMOVE EXISTING GLAZING SYSTEM AND PREPARE OPENING AS INDICATED BY NEW FLOOR PLANS AND OR ELEVATIONS
2. REMOVE EXISTING CASEWORK AND COUNTERTOP
3. REMOVE EXISTING WALL, COORDINATE ANY EXISTING POWER, PLUMBING OR UTILITIES IN ACCORDANCE WITH THE DEMO AND PLANS OF THE MECHANICAL AND ELECTRICAL DRAWINGS
4. REMOVE EXISTING DOOR AND FRAME, COORDINATE WITH NEW FLOOR PLANS TO DETERMINE IF OPENING IS TO BE INFILLED OR UTILIZED IN A DIFFERENT MANNER
5. REMOVE EXISTING PLUMBING FIXTURES, COORDINATE WITH MECHANICAL
6. REMOVE EXISTING OVERHEAD DOOR, FRAME, AND TRACK. PREPARE OPENING FOR NEW SCHEDULED DOOR
7. REMOVE EXISTING FINISH AND TRIM, DOWN TO SHEATHING
8. REMOVE EXISTING CEILING, BATT INSULATION, AND LIGHTING FIXTURES THROUGHOUT.
9. REMOVE EXISTING COLUMNS, ROOF, AND TRIM. PREP FOR NEW ROOFING MATERIAL
10. REMOVE EXISTING ROOF LADDER, EXISTING HATCH TO REMAIN
12. REMOVE EXISTING ASPHALT ROOFING AND ROOF MEMBRANE DOWN TO EXISTING SHEATHING, PREP FOR NEW ROOFING MATERIAL
13. REMOVE EXISTING BALLAST AND ROOF MEMBRANE DOWN TO EXISTING SHEATHING, PREP FOR NEW ROOFING MATERIAL
14. EXISTING ROOF DRAIN TO REMAIN
15. REMOVE EXISTING BOLLARD

Babcock Design

Salt Lake City
52 Exchange Place
Salt Lake City, UT 84111
801.531.1144

Boise
800 W Main Street, Suite 940
Boise, ID 83702
208.424.7675

babcock**design**.com

Consultant

CITY OF ALPINE

ALPINE FIRE STATION #202

50 E 100 N ALPINE, UT 84004

Revisions

Num.	Description	Date

Project Number	25116
Original Issue	04.16.2026
Project Status	CONSTRUCTION DOCUMENTS

The information and content represented herein is considered by law the architect's instruments of service and are the property of Babcock Design. They are available for limited review and evaluation by clients, contractors, and public agencies with regard to this project only and are not to be changed from or added to this notice. They are intended for use only for the project specified and are to be used for no other purpose or project including additions to or modification of the completed project. No part thereof may be copied, reproduced, photographed, modified, published, uploaded, transmitted, disclosed, sold, distributed to others in any way including in digital form, or otherwise used without the prior written consent of Babcock Design.

COPYRIGHT © 2025 BABCOCK DESIGN

Stamp

STATE OF UTAH
ROBERT B. COFFEY
136918
LICENSED ARCHITECT

Sheet Title

DEMO FLOOR PLANS

Sheet Number

AD101

Original drawing is 30" x 42" Autodesk Docs://25116 - ALPINE FIRE STATION 202/25116 – Alpine Fire Station 202.rvt

Current as of: 4/16/2026 9:44:19 PM

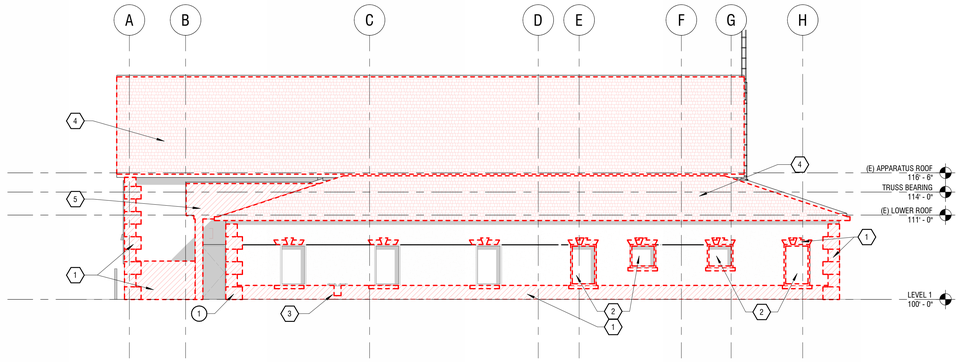

1 WEST ELEVATION - DEMO
1/8" = 1'-0"

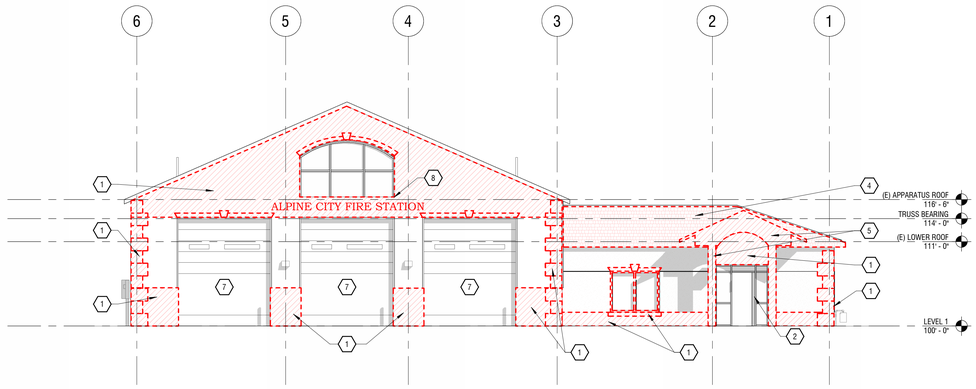

2 NORTH ELEVATION - DEMO
1/8" = 1'-0"

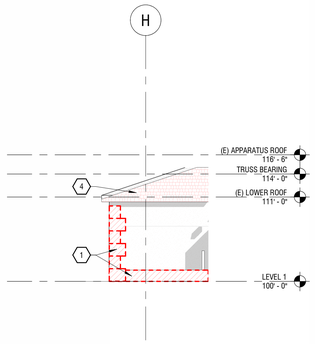

4 EAST ELEVATION - DEMO
1/8" = 1'-0"

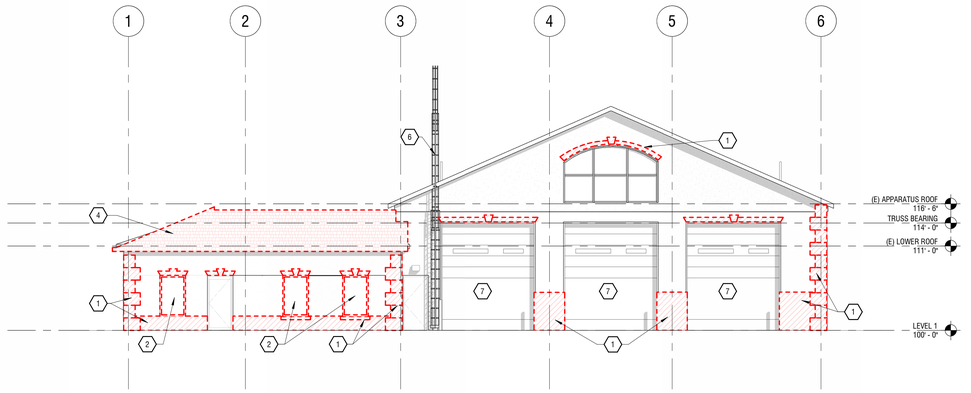

3 SOUTH ELEVATION - DEMO
1/8" = 1'-0"

DEMOLITION GENERAL NOTES

1. IDENTIFY AND FIELD VERIFY ALL EXISTING CONDITIONS AND COORDINATE SCOPE OF PROJECT W/ ARCHITECT PRIOR TO STARTING ANY WORK. STOP WORK AND CONTACT ARCHITECT IMMEDIATELY IF HIDDEN OR UNKNOWN ELEMENTS AND CONCERNS ARE REVEALED OR EXPOSED DURING DEMOLITION.
2. COORDINATE ALL DEMOLITION WORK WITH MECHANICAL AND ELECTRICAL DRAWINGS, REQUIREMENTS, AND NOTES. PROVIDE PROPER BRACING AND SUPPORT OF EXISTING STRUCTURE WHERE REQUIRED.
3. DEMOLITION PLANS ARE PROVIDED TO INDICATE A GENERAL SCOPE ONLY. ITEMS TO BE REMOVED ARE INDICATED ON DEMOLITION PLANS WITH A DOTTED OR BROKEN LINE INCLUDING BUT NOT LIMITED TO INTERIOR PARTITIONS, CEILINGS, DOORS AND FRAMES, EQUIPMENT, ELEMENTS, COMPONENTS, CABINETRY AND ACCESSORIES, ETC. POCHE IS INTENDED TO INDICATE THE REMOVAL OF EXISTING SLAB TO BE REMOVED.
4. THE CONTRACTOR SHALL BE RESPONSIBLE FOR COORDINATING DEMOLITION WITH THE REQUIREMENTS OF ALL PORTIONS OF THE CONSTRUCTION DOCUMENTS AND SHALL PERFORM DEMOLITION AS SHOWN AND/OR NECESSARY TO COMPLETE THE REQUIRED RENOVATION AND NEW CONSTRUCTION. THE ABSENCE ON THE DEMOLITION PLANS OF ITEMS NOTED OR INDICATED DOES NOT RELIEVE THE GENERAL CONTRACTOR OF THE RESPONSIBILITY TO DEMOLISH THESE ITEMS, IF NECESSARY, TO COMPLETE NEW WORK. COORDINATE W/ ARCHITECT AS REQ.
5. COORDINATE DEMOLITION WITH ORIGINAL STRUCTURAL DRAWINGS TO MAINTAIN STRUCTURAL INTEGRITY OF BUILDING. BRING ANY CONFLICT TO THE ATTENTION OF ARCHITECT AND STRUCTURAL ENGINEER PRIOR TO CONTINUATION OF WORK.
6. GENERAL SCOPE OF DEMOLITION WORK REQUIRED MUST BE COORDINATED WITH THE NEW CONSTRUCTION DRAWINGS.
7. UNLESS NOTED OTHERWISE, INTERIOR PARTITIONS AND WALLS WHICH ARE TO BE DEMOLISHED SHALL BE REMOVED FROM FLOOR TO UNDERSIDE OF STRUCTURE ABOVE.
8. ALL EXISTING DOORS, HARDWARE, AND FRAMES MARKED FOR BEING REMOVED ARE TO BE SALVAGED AND REUSED WHEN AND WHERE POSSIBLE. REPAIR EXISTING DOORS TO "LIKE-NEW" CONDITION AND PREP./REPAINT EXISTING FRAMES TO MATCH NEW FINISHES. CONTRACTOR TO VERIFY EXISTING DOOR AND HARDWARE CONDITION AND FUNCTION, AND TO DETERMINE PROPER LOCATION IN NEW DESIGN TO REINSTALL/REUSE. COORDINATED WITH DOOR SCHEDULE. PROPERLY MODIFY AND/OR PREPARE OPENINGS IN EXISTING WALLS AS NECESSARY TO RECEIVE DOOR AND FRAME.
9. CONTRACTOR TO VERIFY THE CONDITION OF ITEMS SHOWN ON THE DRAWINGS TO BE REUSED AND/OR RELOCATED AND REPAIR TO "LIKE-NEW" CONDITION AS NECESSARY. THESE ITEMS SHALL BE PROTECTED FROM DAMAGE, THEFT, AND/OR ABUSE BY THE CONTRACTOR. SALVAGED ITEMS THAT ARE REFINISHED AND REINSTALLED IN THEIR NEW LOCATION SHALL BE PROTECTED FROM WORK ONGOING IN ADJACENT AREAS.
10. CONTRACTOR TO VERIFY LOCATION OF ALL EXISTING UTILITIES TO BE REMOVED, RELOCATED OR ABANDONED PRIOR TO COMMENCING DEMOLITION ACTIVITIES.
11. THE CONTRACTOR SHALL COORDINATE WORK ASSOCIATED WITH THE REMOVAL, RELOCATION OR ABANDONMENT OF UTILITIES WITH THE UTILITY COMPANY OR ENTITY HAVING OWNERSHIP OF EACH RESPECTIVE UTILITY. COSTS FOR DISCONNECTION, REMOVAL, AND/OR RELOCATION OF EXISTING UTILITIES AS SHOWN ON THE DRAWINGS OR AS NECESSARY TO ALLOW FOR THE EXECUTION OF THE WORK SHALL BE PAID BY THE CONTRACTOR.
12. PROVIDE TEMPORARY SHORING AND BRACING AS REQUIRED WHENEVER BEARING WALLS, STRUCTURES, OR SUPPORTS ARE MODIFIED.
13. NO OPEN BURNING SHALL BE PERMITTED ON THE SITE.
14. ALL DEMOLISHED MATERIALS SHALL BECOME THE PROPERTY OF THE CONTRACTOR AND SHALL BE LEGALLY DISPOSED OF OFF-SITE UNLESS OTHERWISE SHOWN.
15. TERMINAL ENDS OF UTILITIES ABANDONED IN-PLACE SHALL BE CUT, CAPPED, AND PLUGGED. THE ENDS OF DISCONNECTED UTILITIES SHALL BE MARKED FOR FUTURE IDENTIFICATION WITH DETECTABLE LOCATOR TAPE OR A METAL ROD.
16. WHERE ELECTRICAL NEEDS TO BE ABANDONED, REMOVE WIRE FROM OUTLET ALL THE WAY BACK TO THE ELECTRICAL PANEL / SOURCE. ALL WORK SHALL BE DONE BY A LICENSED ELECTRICIAN.
17. WHERE PLUMBING NEEDS TO BE ABANDONED, REMOVE ALL VENT STACK PIPE & ROOF PENETRATION. REMOVE ALL OVERHEAD WATER LINES BACK TO POINT OF ENTRY (CAREFULLY VERIFY IF ANY LINES CAN BE RE-UTILIZED AS PART OF NEW BUILD OUT). MAKE SURE ALL WATER HAS BEEN TURNED OFF PRIOR TO WORK. ALL WORK SHALL BE DONE BY A LICENSED PLUMBER.
18. WHERE GAS LINES OR SERVICE NEEDS TO BE ABANDONED, CAREFULLY REMOVE ALL PIPING, SHUT-OFF VALVES & FITTING AS REQUIRED. GAS METER REGULATOR SHALL BE REMOVED BY UTILITY COMPANY. ALL WORK SHALL BE DONE BY A LICENSED SUB-CONTRACTOR.
19. WHERE VENTILATION OR AIR CONDITIONING NEEDS TO BE ABANDONED, REMOVE ALL EXHAUST & OUTSIDE AIR DUCTS AS REQUIRED. ROOF-TOP FANS SHALL BE REMOVED & THE OPENINGS DRIED-IN TO PREVENT ANY WATER PENETRATION IN THE SPACE. ALL WORK SHALL BE DONE BY A LICENSED CONTRACTOR.
20. EXISTING MILLWORK NOT MARKED FOR DEMOLITION IS TO REMAIN; CONTRACTOR SHALL REPAIR ALL HARDWARE AS NECESSARY TO ENSURE THAT EXISTING MILLWORK IS IN "LIKE-NEW" CONDITION.
21. ALL EXISTING WALL COVERINGS ON WALLS TO BE SALVAGED SHOULD BE REMOVED, SKIM COAT, PATCH, REPAIR AS NEEDED TO PREPARE FOR NEW FINISH.
22. DEMO TO BASE SUBSTRATE. PROTECT FINISHES NOT INVOLVED IN DEMOLITION. PATCH AND REPAIR ALL EXISTING FINISHES OF WALLS, CEILINGS, FLOORS, OR SURFACES THAT ARE EXPOSED OR DAMAGED DURING DEMOLITION. MATCH EXISTING AND/OR PROVIDE NEW FINISHES AS REQUIRED.
23. CONTRACTOR SHALL COORDINATE THE REMOVAL OF ALL CARPET WITH THE FINISHED FLOOR PLAN. CARPET IN SPACES LISTED AS N.I.C. SHALL NOT BE DISTURBED UNLESS DIRECTED BY THE BUILDING OWNER OR ARCHITECT.

SHEET NOTES - DEMO

NOTE: THESE NOTES APPLY TO THIS SHEET ONLY.

1 REMOVE EXISTING FINISH AND TRIM, DOWN TO SHEATHING
2 REMOVE EXISTING GLAZING SYSTEM AND PREPARE OPENING AS INDICATED BY NEW FLOOR PLANS AND OR ELEVATIONS
3 GAS METER - COORDINATE WITH EXISTING CONDITIONS AND MECHANICAL DRAWINGS
4 REMOVE EXISTING ASPHALT ROOFING AND ROOF MEMBRANE DOWN TO EXISTING SHEATHING, PREP FOR NEW ROOFING MATERIAL
5 REMOVE EXISTING COLUMNS, ROOF, AND TRIM, PREP FOR NEW ROOFING MATERIAL
6 EXISTING RADIO TOWER
7 REMOVE EXISTING OVERHEAD DOOR, FRAME, AND TRACK. PREPARE OPENING FOR NEW SCHEDULED DOOR
8 REMOVE EXISTING BUILDING SIGNAGE AND REPAIR BUILDING FINISH TO A LIKE NEW CONDITION

Babcock Design

Salt Lake City
52 Exchange Place
Salt Lake City, UT 84111
801.531.1144

Boise
800 W Main Street, Suite 940
Boise, ID 83702
208.424.7675

babcock**design**.com

Consultant

CITY OF ALPINE

ALPINE FIRE STATION #202

50 E 100 N ALPINE, UT 84004

Revisions

Num.	Description	Date

Project Number	25116
Original Issue	04.16.2026
Project Status	CONSTRUCTION DOCUMENTS

The information and content represented herein is considered by law the architect's instruments of service and are the property of Babcock Design. They are available for limited review and evaluation by clients, consultants, contractors, government agencies, vendors, and office personnel only in accordance with this notice. They are intended for use only for the project specified and are to be used for no other purpose or project including additions to or modification of the completed project. No part thereof may be copied, reproduced, photographed or otherwise duplicated in any form whatsoever, stored, distributed to others or in any way including in digital form, or otherwise used without the prior written consent of Babcock Design.

COPYRIGHT © 2025 BABCOCK DESIGN

Stamp

STATE OF UTAH
ROBERT B. COTTLE
138918
LICENSED ARCHITECT

Sheet Title

DEMO EXTERIOR ELEVATIONS

Sheet Number

AD301

Current as of: 4/15/2026 9:44:29 PM
Original drawing is 30" x 42" Autodesk Docs://25116 - ALPINE FIRE STATION 202/25116 - Alpine Fire Station 202.rvt

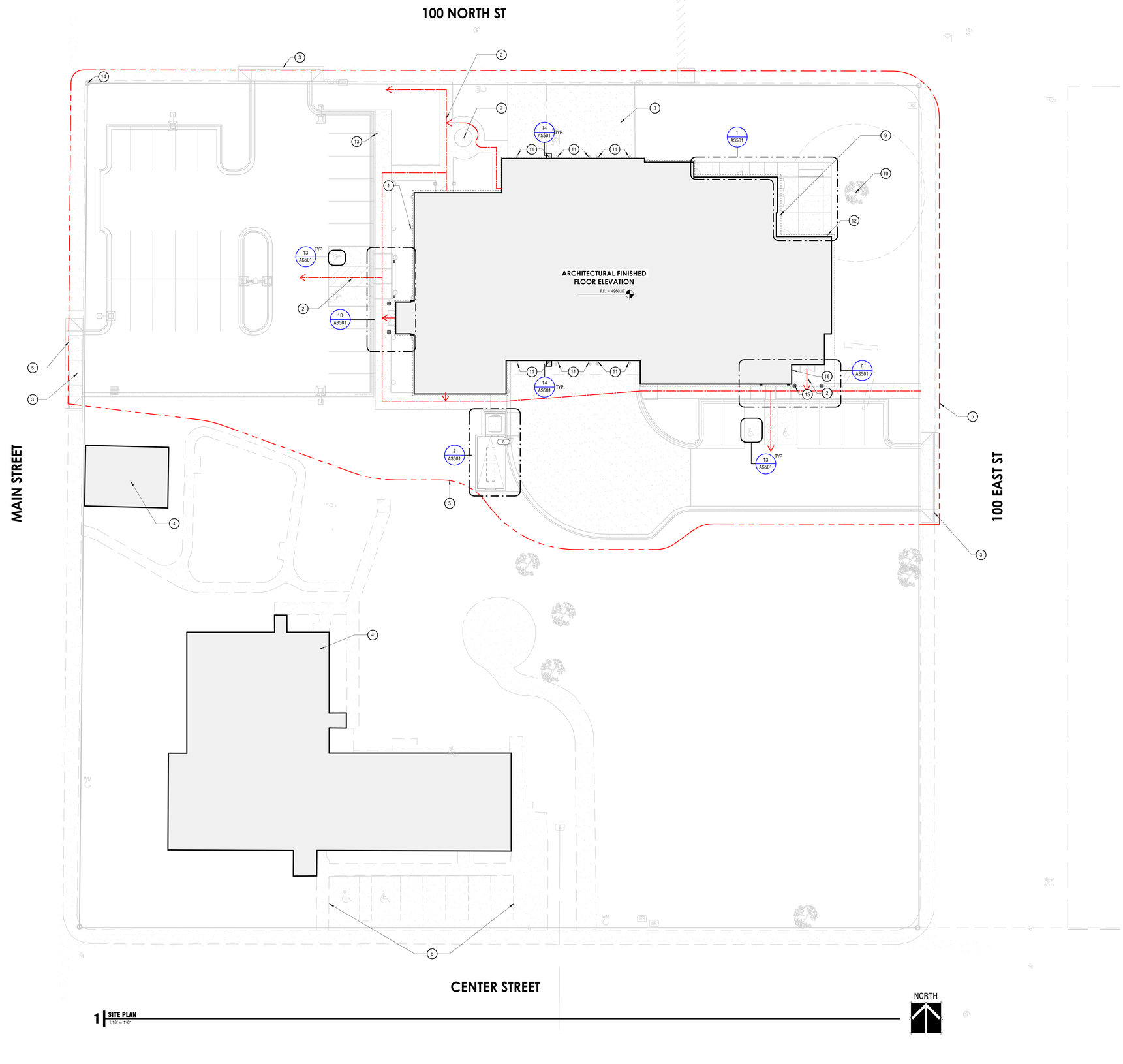

1 **SITE PLAN**
1/16" = 1'-0"

SITE PLAN GENERAL NOTES

1. SEE CIVIL DRAWINGS FOR LIMITS OF CONSTRUCTION - CONTRACT LIMIT LINE IS FROM BACK OF CURB UNLESS NOTED OTHERWISE.
2. SEE CIVIL DRAWINGS FOR ALL GRADING, SITE WORK, UTILITY CONNECTIONS, RETAINING WALLS, ETC. - INFORMATION SHOWN HERE IS SCHEMATIC
3. LANDSCAPE DESIGN IS A DEFERRED DESIGN - TO BE COMPLETED BY ALPINE CITY
4. SEE ELECTRICAL DRAWINGS FOR UTILITY CONNECTIONS - INFORMATION SHOWN HERE IS SCHEMATIC
5. DIMENSIONS ARE FROM BACK OF CURB UNLESS OTHERWISE NOTED.
6. CONNECT ALL PRIMARY ROOF DRAINS TO UNDERGROUND DISCHARGE SYSTEM. COORDINATE WITH CIVIL DRAWINGS.
7. LANDSCAPE DESIGN IS BEING INTENTIONALLY DEFERRED AND WILL BE CONTRACTED DIRECTLY BY THE OWNER AT A LATER DATE WHEN THE ADJACENT "SCULPTURE GARDEN" SCOPE IS UNDERWAY.

SHEET NOTES

NOTE: THESE NOTES APPLY TO THIS SHEET ONLY.

(#)

1 GAS METER - COORDINATE WITH EXISTING CONDITIONS AND MECHANICAL DRAWINGS
2 ACCESSIBLE EGRESS ROUTE
3 NEW CURB CUT - COORDINATE WITH CIVIL DRAWINGS
4 EXISTING STRUCTURE - NOT IN SCOPE
5 APPROXIMATE AREA WITHIN SCOPE - COORDINATE WITH CIVIL DRAWINGS AND EXISTING/DEMO PLANS
6 EXISTING PARKING - NOT IN SCOPE
7 EXISTING FLAG POLE TO REMAIN
8 NEW EXIT APPARATUS APRON - COORDINATE WITH CIVIL DRAWINGS FOR FULL SCOPE
9 ROOF OVERHANG ABOVE - COORDINATE WITH ROOF PLAN
10 PROTECT EXISTING TREE DURING CONSTRUCTION - TREE TO REMAIN
11 PAINTED STEEL BOLLARD
12 PRE FINISHED GUTTER AND DOWNSPOUT
13 FUTURE VEHICLE CHARGING STATION
14 EXISTING STREET LIGHT TO REMAIN
15 BOLLARDS
16 DOORBELL AND ADA DOOR ACTUATOR PANEL - COORDINATE WITH ELECTRICAL

Babcock Design

Salt Lake City
52 Exchange Place
Salt Lake City, UT 84111
801.531.1144

Boise
800 W Main Street, Suite 940
Boise, ID 83702
208.424.7675

babcock**design**.com

Consultant

CITY OF ALPINE

ALPINE FIRE STATION #202

50 E 100 N ALPINE, UT 84004

Revisions

Num.	Description	Date

Project Number	25116
Original Issue	04.16.2026
Project Status	CONSTRUCTION DOCUMENTS

The information and content represented herein is considered by law the architect's instruments of service and are the property of Babcock Design. They are available for limited review and evaluation by clients, consultants, contractors, government agencies, vendors, and office personnel only in accordance with this notice. They are intended for use only for the project specified and are to be used for no other purpose or project including additions to or modification of the completed project. No part thereof may be copied, reproduced, published or used in any way by any person for any purpose without the prior written consent of others in any way including in digital form, or otherwise used without the prior written consent of Babcock Design.

COPYRIGHT © 2025 BABCOCK DESIGN

Stamp

STATE OF UTAH · ROBERT B. COTTLE · 138918 · LICENSED ARCHITECT

Sheet Title

SITE PLAN

Sheet Number

AS101

Current as of: 4/15/2026 9:44:03 PM
Original drawing is 30" x 42" Autodesk Docs://25116 - ALPINE FIRE STATION 202/25116 - Alpine Fire Station 202.rvt

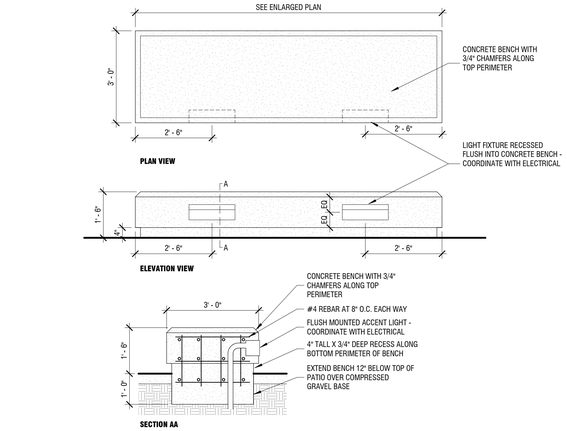

16 CONCRETE BENCH DETAIL
1/2" = 1'-0"

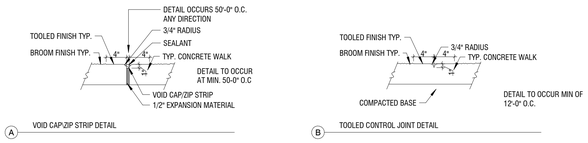

17 CONCRETE JOINT DETAILS
1" = 1'-0"

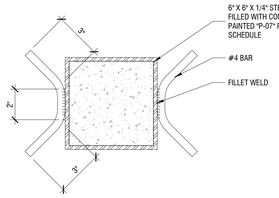

18 BOLLARD CROSS SECTION
3" = 1'-0"

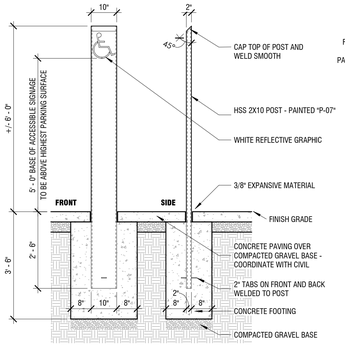

19 ADA PARKING SIGN
1/2" = 1'-0"

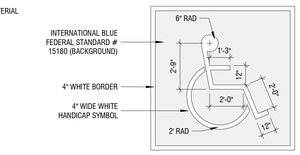

13 ADA STRIPING SYMBOL
1 1/2" = 1'-0"

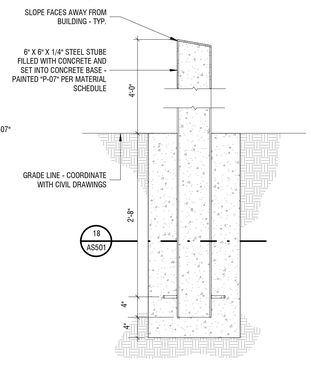

14 BOLLARD SECTION
1/2" = 1'-0"

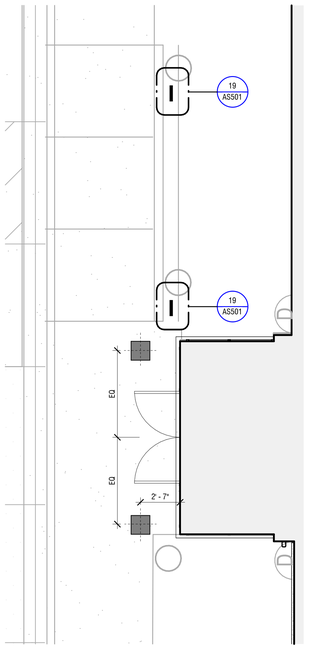

10 WEST ENTANCE - ENLARGED PLAN
1/4" = 1'-0"

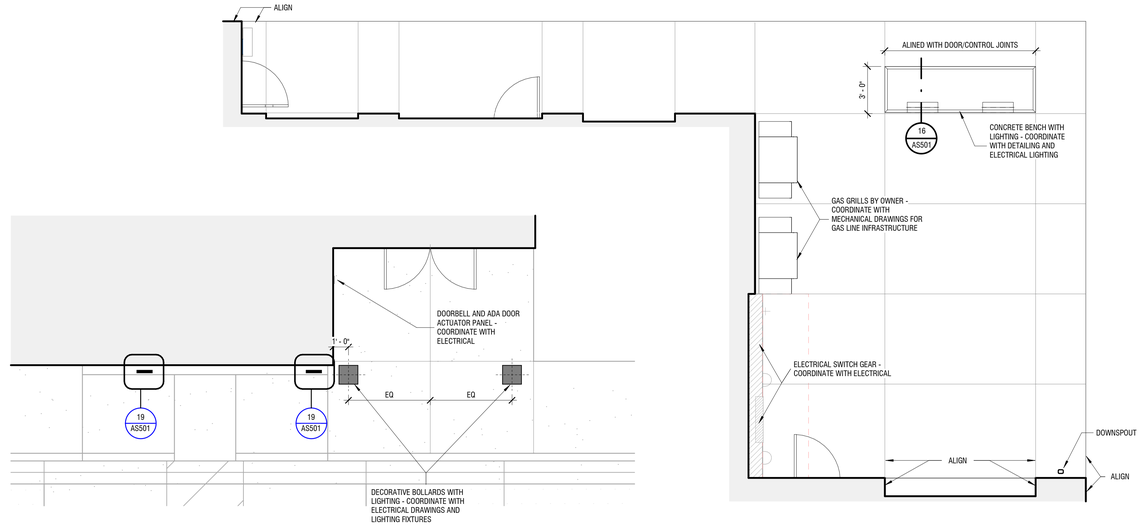

6 OUTDOOR AREA - FIRE MAIN ENTRY PLAN
1/4" = 1'-0"

1 OUTDOOR PATIO - ENLARGED PLAN
1/4" = 1'-0"

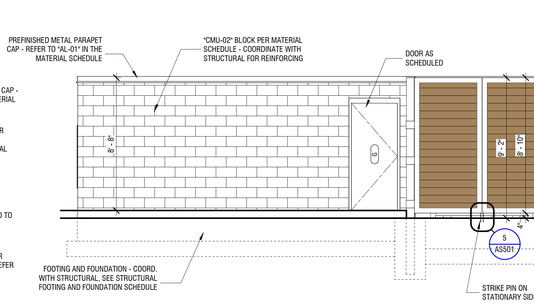

7 GENERATOR ENCLOSURE - FRONT ELEVATION
1/4" = 1'-0"

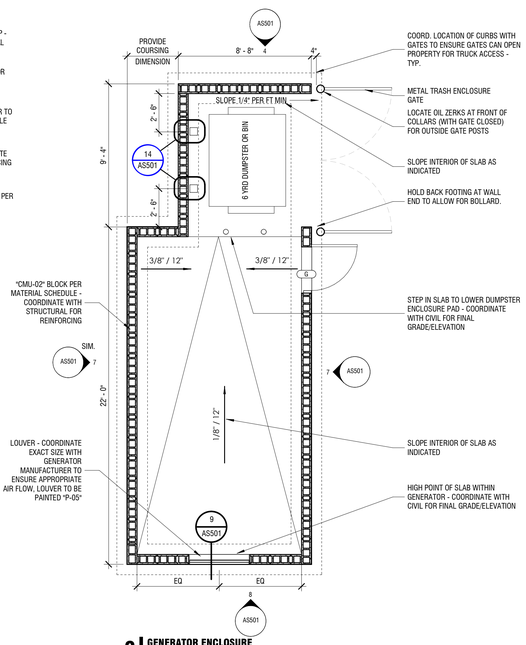

2 GENERATOR ENCLOSURE
1/4" = 1'-0"

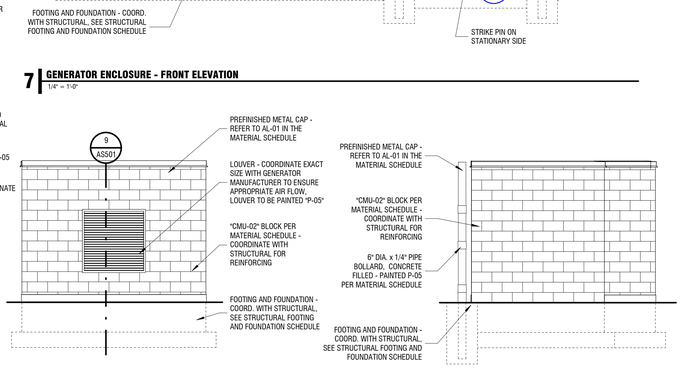

11 DUMPSTER GATE - END POST DETAIL
1/2" = 1'-0"

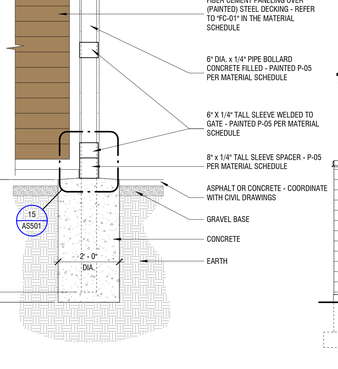

8 GENERATOR ENCLOSURE - SIDE ELEVATION
1/4" = 1'-0"

4 GENERATOR ENCLOSURE - SIDE ELEVATION
1/4" = 1'-0"

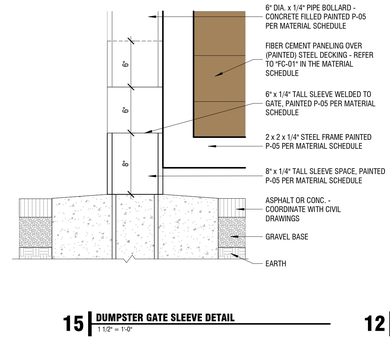

15 DUMPSTER GATE SLEEVE DETAIL
1 1/2" = 1'-0"

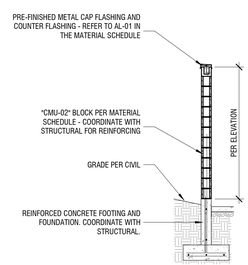

12 TRASH ENCLOSURE WALL SECTION
1/4" = 1'-0"

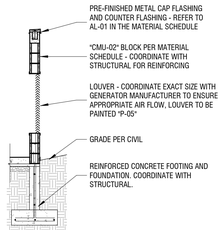

9 GENERATOR ENCLOSURE - SECTION
1/4" = 1'-0"

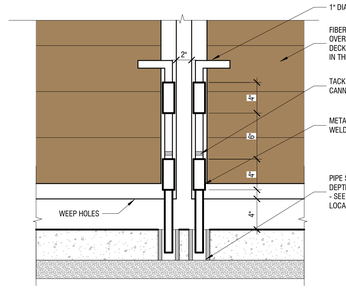

5 DUMPSTER GATE PIN
1 1/2" = 1'-0"

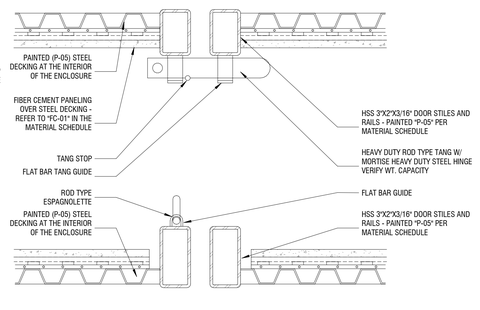

3 GATE ESPAGOLETTE
3" = 1'-0"

Babcock Design

Salt Lake City
52 Exchange Place
Salt Lake City, UT 84111
801.531.1144

Boise
800 W Main Street, Suite 940
Boise, ID 83702
208.424.7675

babcock**design**.com

Consultant

CITY OF ALPINE

ALPINE FIRE STATION #202

50 E 100 N ALPINE, UT 84004

Revisions

Num.	Description	Date

Project Number	25116
Original Issue	04.16.2026
Project Status	CONSTRUCTION DOCUMENTS

The information and content represented herein is considered by law the architect's instruments of service and are the property of Babcock Design. They are available for limited review and evaluation by clients, governmental agencies, and contractors for bidding purposes only. Reproduction is prohibited without this notice. They are intended for use only for the project specified and are to be used for no other purpose or project including additions to or modification of the completed project. No part thereof may be copied, reproduced, photographed, modified, published, uploaded, transmitted, disclosed, sold, distributed to others in any way including in digital form, or otherwise used without the prior written consent of Babcock Design.

COPYRIGHT © 2025 BABCOCK DESIGN

Stamp

STATE OF UTAH · JEREMY B. COATES · 13691B · LICENSED ARCHITECT

Sheet Title

SITE DETAILS

Sheet Number

AS501

Current as of: 4/16/2026 9:44:44 PM

Original drawing is 30" x 42" Autodesk Docs://25116 - ALPINE FIRE STATION 202/25116 - Alpine Fire Station 202.rvt

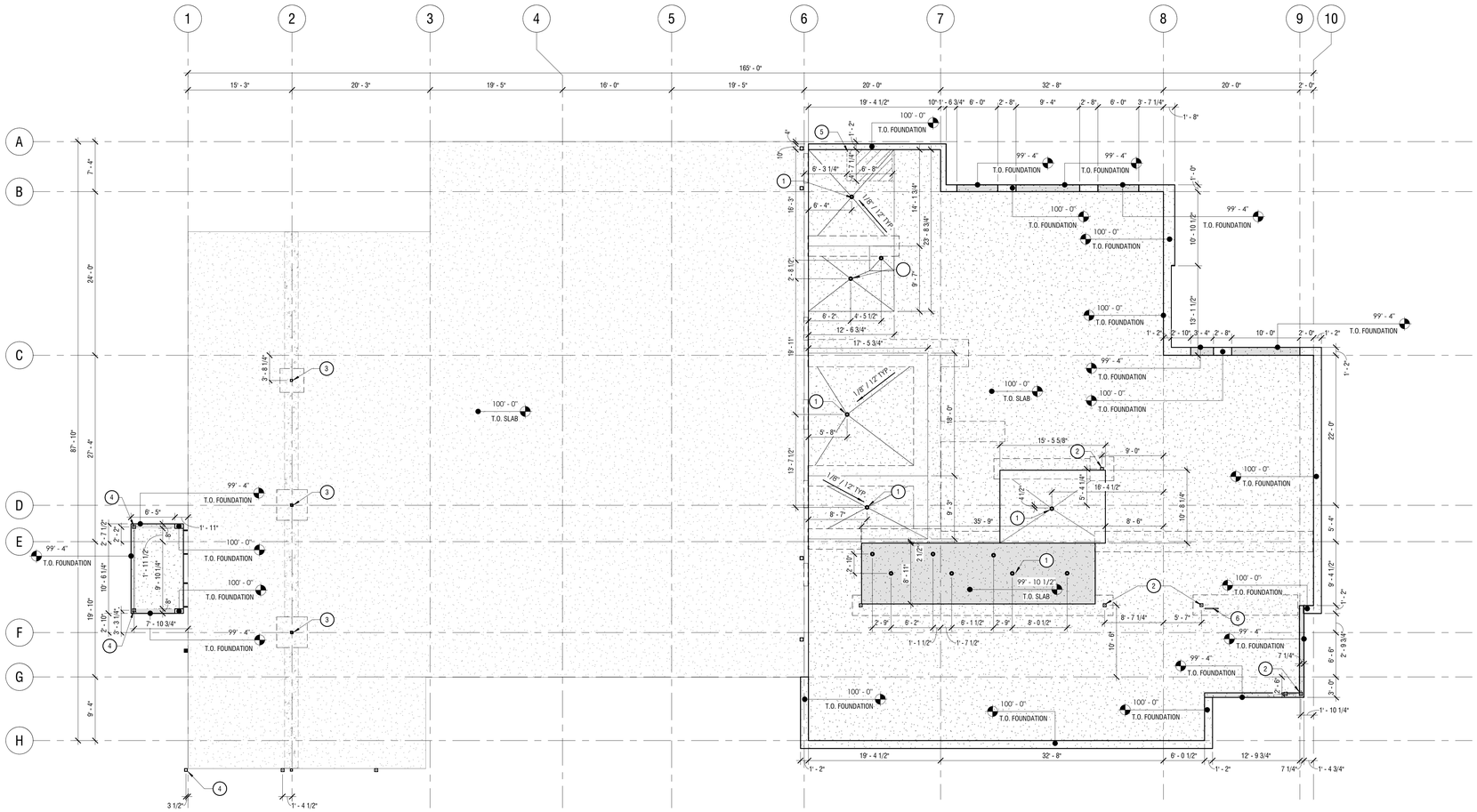

1 LEVEL 1 - SLAB PLAN

1/8" = 1'-0"

NORTH

SLAB PLAN GENERAL NOTES

1. ARCHITECTURAL SLAB PLANS SHALL DETERMINE SLAB EDGES; NOTIFY ARCHITECT OF ANY DETAILS INCONSISTENT WITH THE STRUCTURAL DRAWINGS PRIOR TO WORK.
2. CONTRACTOR TO COORDINATE THE LOCATION OF ALL FLOOR DRAINS AND FLOOR SINKS WITH PLUMBING DRAWINGS AND KITCHEN DRAWINGS.
3. CONTRACTOR TO COORDINATE THE LOCATION OF ALL ROOF DRAINS WITH PLUMBING DRAWINGS.
4. CONTRACTOR TO COORDINATE THE LOCATION OF ALL FLOOR OUTLETS WITH OWNER, ARCHITECT AND ELECTRICAL DRAWINGS.
5. REFER TO STRUCTURE FOR CONTROL JOINTS LOCATIONS ON SLABS ON GRADE UNLESS NOTED OTHERWISE.
6. INSTALL VAPOR BARRIER UNDER SLAB ON GRADE PER SPEC.

SHEET NOTES

NOTE: THESE NOTES APPLY TO THIS SHEET ONLY.

(#)

FLOOR DRAIN, COORDINATE WITH MECHANICAL

1 FLOOR DRAIN, COORDINATE WITH MECHANICAL
2 PAINTED STEEL COLUMN, COORDINATE WITH STRUCTURAL
3 EXISTING COLUMN
4 PLACE NEW COLUMN IN CENTERLINE OF EXISTING STUD WALL - COORDINATE WITH STRUCTURAL
5 HATCHED AREA INDICATES 12" THICK CONCRETE SLAB LEVEL WITH ADJACENT SURFACE TO REINFORCE WEIGHT OF EXTRACTOR - COORDINATE WITH SLAB PLANS
6 RECESS IN SLAB PLAN TO ACCOMMODATE A FLUSH MOUNTED LIGHT BETWEEN THE PERFORATED METAL LOBBY WALL AND RECLAIMED BRICK, COORDINATE FINAL SIZE AND DEPTH WITH ARCHITECTURAL DETAILING AND LIGHTING FIXTURE

Babcock Design

Salt Lake City
52 Exchange Place
Salt Lake City, UT 84111
801.531.1144

Boise
800 W Main Street, Suite 940
Boise, ID 83702
208.424.7675

babcock**design**.com

Consultant

CITY OF ALPINE

ALPINE FIRE STATION #202

50 E 100 N ALPINE, UT 84004

Revisions

Num.	Description	Date

Project Number	25116
Original Issue	04.16.2026
Project Status	CONSTRUCTION DOCUMENTS

The information and content represented herein is considered by law the architect's instruments of service and are the property of Babcock Design. They are available for limited review and evaluation by clients, governmental agencies, and contractors for bidding or construction purposes only as agreed to by this notice. They are intended for use only for the project specified and are to be used for no other purpose or project including additions to or modification of the completed project. No part thereof may be copied, reproduced, photographed, modified, published, uploaded, transmitted, disclosed, sold, distributed to others in any way including in digital form, or otherwise used without the prior written consent of Babcock Design.

COPYRIGHT © 2020 BABCOCK DESIGN

Stamp

STATE OF UTAH · REGISTERED · 136918 · LICENSED ARCHITECT

Sheet Title

LEVEL 1 SLAB PLAN

Sheet Number

A111

Original drawing is 30" x 42" Autodesk Docs://25116 - ALPINE FIRE STATION 202/25116 - Alpine Fire Station 202.rvt

Current as of: 4/16/2026 9:44:47 PM

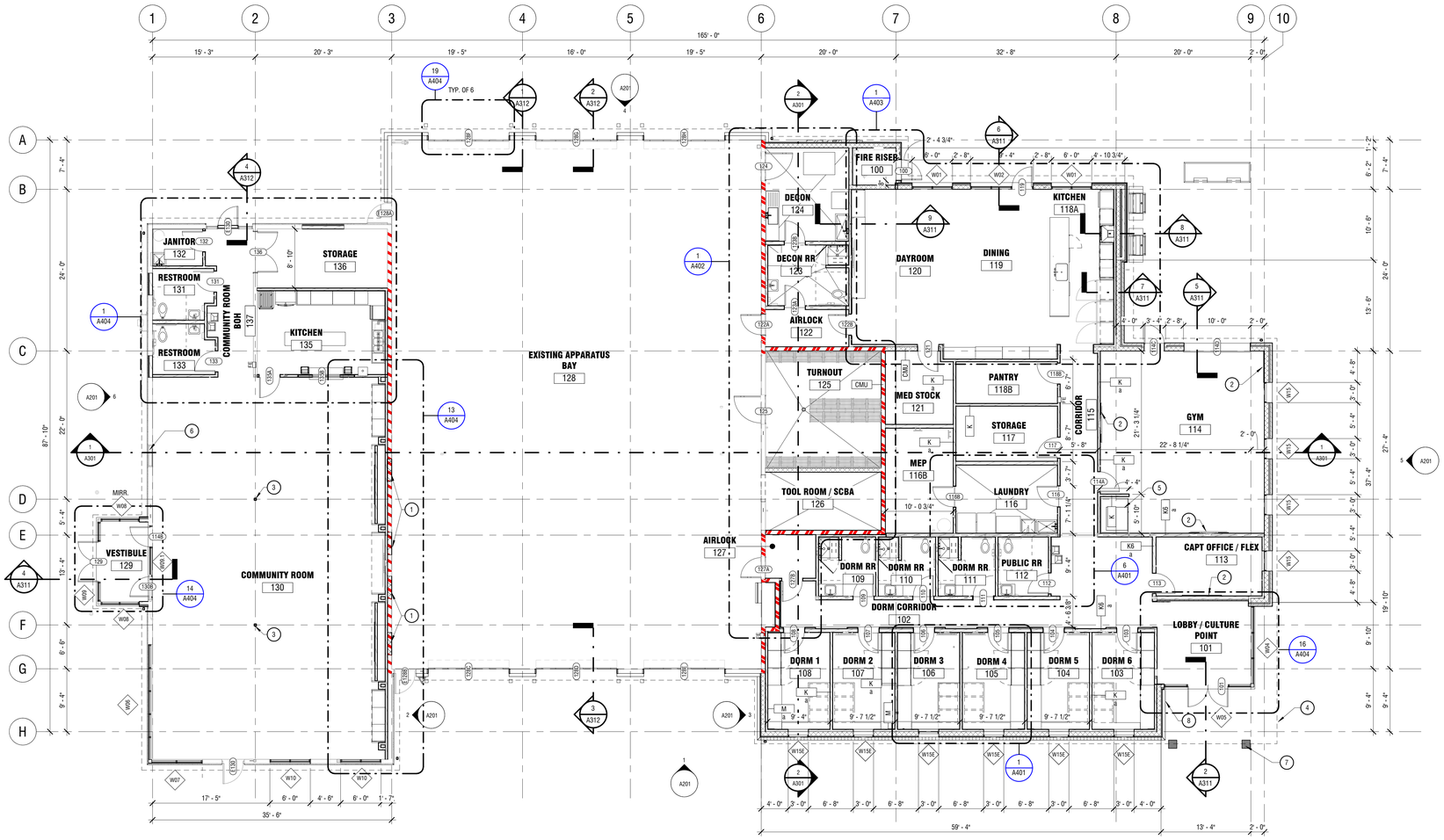

1 LEVEL 1 - FLOOR PLAN

1/8" = 1'-0"

NORTH

FLOOR PLAN GENERAL NOTES

1. DRAWINGS & SPECIFICATIONS ARE COMPLIMENTARY COMPONENTS OF THE CONTRACT DOCUMENTS. REVIEW ALL DRAWINGS AND SPECIFICATIONS FOR THE COMPLETE SCOPE OF WORK. NOTIFY ARCHITECT IMMEDIATELY FOR CLARIFICATION IF INCONSISTENCIES, CONTRADICTIONS OR OMISSIONS ARE DISCOVERED.
2. DO NOT SCALE DRAWINGS, IF DIMENSIONAL INFORMATION IS REQUIRED & NOT FOUND, NOTIFY ARCHITECT IMMEDIATELY FOR CLARIFICATION BEFORE PROCEEDING WITH CONSTRUCTION.
3. ALL DIMENSIONS ARE TO COLUMN CENTERLINES, TO GRIDLINES OR TO FACE OF FRAMING UNLESS NOTED OTHERWISE.
4. UNLESS NOTED OTHERWISE CLEAR DIMENSIONS INDICATE DIMENSION BETWEEN FINISHES.
5. CONTRACTOR SHALL NOTIFY THE ARCHITECT OF DISCREPANCIES IN THE DOCUMENTS, AND OF ANY FIELD CONDITIONS THAT DEVIATE FROM THE DOCUMENTS.
6. THE ARCHITECT'S APPROVAL MUST BE OBTAINED FOR ANY DEVIATIONS FROM THE CONSTRUCTION DOCUMENTS, INCLUDING BUT NOT LIMITED TO CHANGES IN DIMENSIONS, DESIGN, MATERIALS, PRODUCTS, AND FINISHES. IN NO CASE MAY THE CONTRACTOR MAKE THESE CHANGES WITHOUT THE APPROVAL OF THE ARCHITECT.
7. SHOP DRAWINGS AND OTHER SUBMITTALS ARE TO BE PRESENTED TO THE ARCHITECT FOR REVIEW PRIOR TO EXECUTION OF WORK. ALLOW APPROPRIATE TIME FOR REVIEW.
8. SEE DOOR AND WINDOW SCHEDULES FOR SIZES, TYPES, AND FINISHES, HARDWARE, ETC.
9. FOR BUILDING CODE REQUIREMENTS OR FIRE/SMOKE REQUIREMENTS, SEE 'G' SHEETS.
10. ALL FIRE RATED WALLS TO BE LABELED AS FIRE RATED. LABEL TO BE PLACED ABOVE CEILING LINE.
11. SEE WALL TYPE CONSTRUCTION DETAILS ON SHEET A611 AND ADDITIONAL DETAILS ON SHEETS A612 AND A613 FOR WALL TERMINATIONS, ETC.
12. HINGE SIDE OF DOORS ARE LOCATED 4" FROM ADJACENT WALL UNLESS NOTED OTHERWISE.
13. ANY COLUMN FURRING TO BE TIGHT TO COLUMN UNO.
14. ALL CONSTRUCTION SHALL CONFORM TO AND STRICTLY COMPLY WITH ALL APPLICABLE CODES, COVENANTS, RESTRICTIONS, AND OTHER REQUIREMENTS OF THE AUTHORITY HAVING JURISDICTION OVER THE PROJECT.
15. IN NO EVENT SHALL THE CONTRACTOR SUBMIT A STANDARD CONSTRUCTION DETAIL FOR A DETAIL SPECIFIED IN THESE DOCUMENTS WITHOUT THE APPROVAL IN WRITING FROM THE ARCHITECT. THE CONTRACTOR SHALL BRING ALL WORK INTO CONFORMITY WITH THE CONSTRUCTION DOCUMENTS, AS THE ARCHITECT ORDERS, BEFORE APPROVAL OF THAT PORTION OF THE PROJECT WILL BE GRANTED.
16. BRACE ALL CEILINGS AND NON-LOAD BEARING WALLS AS REQUIRED.
17. CONTRACTOR TO COORDINATE ALL FLOOR PENETRATIONS WITH ALL TRADES. ALL PENETRATIONS ARE TO BE 1-HOUR FIRE STOPPED.
18. COORDINATE WITH ELECTRICAL DRAWINGS FOR POWER, DATA, AND OTHER SYSTEM LOCATIONS AND REQUIREMENTS.
19. THE FURNITURE AND OTHER F.F.E. SHOWN ON DRAWINGS IS SCHEMATIC AND IS ONLY TO BE USED FOR REFERENCE ONLY. THE CONTRACTOR SHALL COORDINATE THE FINAL LOCATION OF ELECTRICAL OUTLETS AND OTHER NEEDS WITH THE OWNER AND ARCHITECT, PRIOR TO INSTALLATION.

FIRE RATING LEGEND

NOT ALL FIRE RATINGS MAY BE USED ON THIS PROJECT. DRAWINGS SHOULD BE VIEWED/PRINTED IN COLOR TO ACCURATELY DEPICT THE RATED WALL CONDITION.

1-HR FIRE BARRIER/PARTITION *(IBC 707, 708)*

2-HR FIRE BARRIER *(IBC 707)*

SHEET NOTES

NOTE: THESE NOTES APPLY TO THIS SHEET ONLY.

1. INFILL 8X8X16 CONCRETE MASONRY UNIT WALL TO MATCH EXISTING, COORDINATE WITH STRUCTURAL
2. TV, N.I.C., COORDINATE WITH ELECTRICAL.
3. PAINTED STEEL COLUMN, COORDINATE WITH STRUCTURAL
4. ROOF OVERHANG ABOVE - COORDINATE WITH ROOF PLAN
5. SAUNA, OFCI
6. EXISTING WINDOW TO REMAIN
7. BOLLARDS
8. DOORBELL AND ADA DOOR ACTUATOR PANEL - COORDINATE WITH ELECTRICAL

Babcock Design

Salt Lake City
52 Exchange Place
Salt Lake City, UT 84111
801.531.1144

Boise
800 W Main Street, Suite 940
Boise, ID 83702
208.424.7675

babcock**design**.com

Consultant

CITY OF ALPINE

ALPINE FIRE STATION #202

50 E 100 N ALPINE, UT 84004

Revisions

Num.	Description	Date

Project Number	25116
Original Issue	04.16.2026
Project Status	CONSTRUCTION DOCUMENTS

The information and content represented herein is considered by law the architects instruments of service and are the property of Babcock Design. They are available for limited review and evaluation by clients, consultants, contractors, government agencies, vendors, and office personnel only in accordance with this notice. They are intended for use only for the project specified and are to be used for no other purpose or project including additions to or modification of the completed project. No part thereof may be copied, reproduced, photographed, modified, published, uploaded, posted, transmitted, distributed, sold, distributed to others or any way including in digital form, or offered or used without the prior written consent of Babcock Design.

COPYRIGHT © 2025 BABCOCK DESIGN

Stamp

STATE OF UTAH · ROBERT B. COTTLE · 138918 · LICENSED ARCHITECT

Sheet Title

LEVEL 1 FLOOR PLAN

Sheet Number

A112

Original drawing is 30" x 42" Autodesk Docs://25116 - ALPINE FIRE STATION 202/25116 - Alpine Fire Station 202.rvt

Central.rvt 4/16/2026 9:43:00 PM

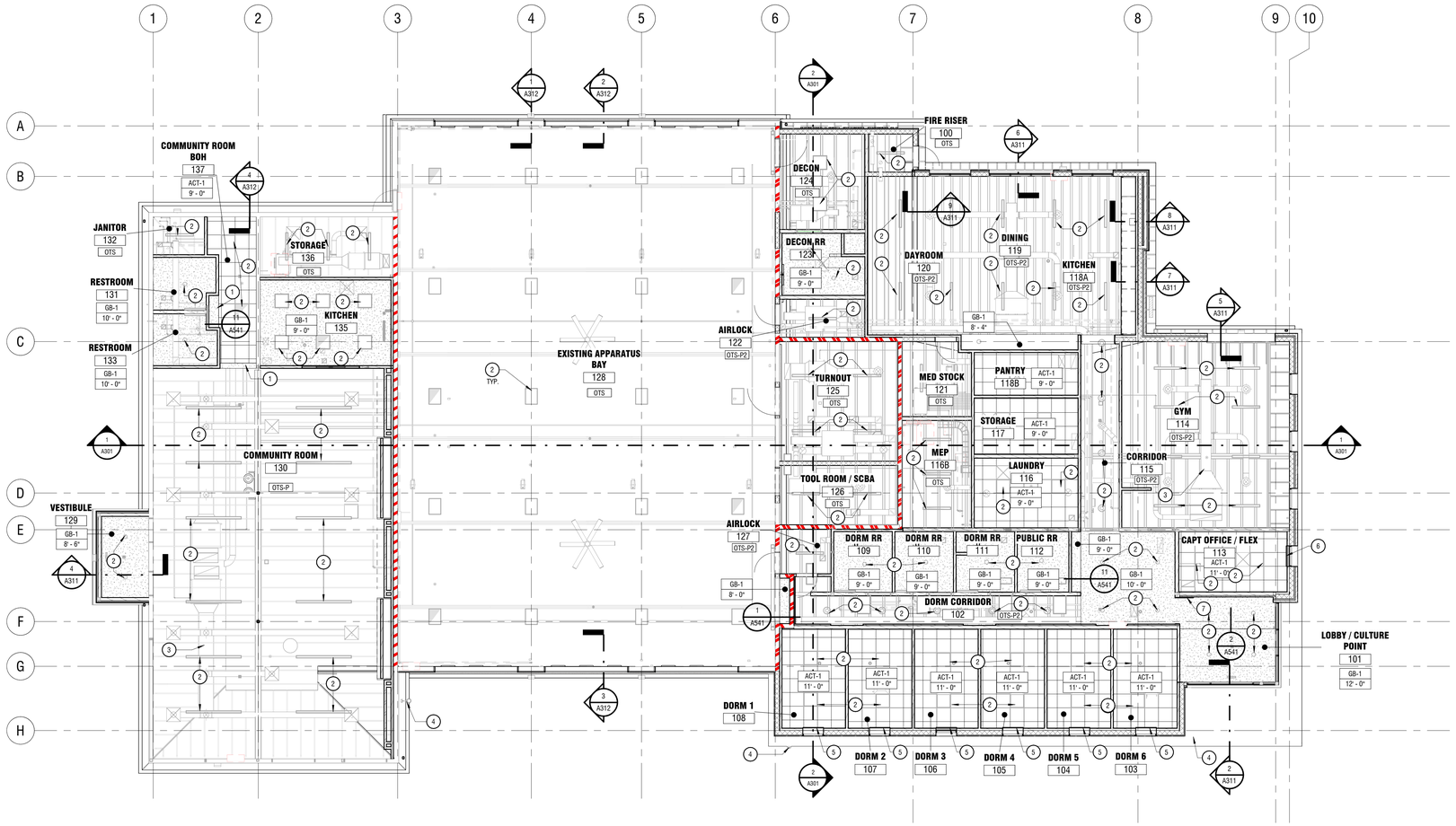

1 REFLECTED CEILING PLAN - LEVEL 1

1/8" = 1'-0"

NORTH

REFLECTED CEILING PLAN GENERAL NOTES

1. DRAWINGS & SPECIFICATIONS ARE COMPLEMENTARY COMPONENTS OF THE CONTRACT DOCUMENTS, REVIEW ALL DRAWINGS AND SPECIFICATIONS FOR THE COMPLETE SCOPE OF WORK. NOTIFY ARCHITECT IMMEDIATELY FOR CLARIFICATION IF INCONSISTENCIES, CONTRADICTIONS OR OMISSIONS ARE DISCOVERED.
2. DO NOT SCALE DRAWINGS, IF DIMENSIONAL INFORMATION IS REQUIRED & NOT FOUND, NOTIFY ARCHITECT IMMEDIATELY FOR CLARIFICATION.
3. ALL DIMENSIONS ARE TO COLUMN CENTERLINES, CENTER OF SUSPENDED CEILING GRIDS OR TO FACE OF FRAMING, U.N.O. CLEAR DIMENSIONS INDICATE DIMENSION BETWEEN FINISHES.
4. ALL GWB SOFFITS AND BULKHEADS ARE TO BE 2 INCHES BELOW ADJACENT SUSPENDED CEILING SYSTEMS, UNLESS NOTED OTHERWISE.
5. FINISHED CEILING HEIGHT IS 9'-0" UNLESS NOTED OTHERWISE.
6. SUSPENDED CEILING TILES IN EACH ROOM ARE TO BE CONFIGURED SUCH THAT NO LESS THAN ONE-HALF A BORDER TILE EXISTS ADJACENT TO ANY ROOM WALL, UNLESS NOTED OTHERWISE.
7. SUSPENDED CEILING GRIDS ARE LAID OUT WITH EITHER A TILE OR A GRID AT THE CENTER OF THE ROOM IN EACH DIRECTION UNLESS NOTED OR DIMENSIONED OTHERWISE.
8. CEILINGS IN ELECTRICAL ROOMS, TELEPHONE ROOMS, MECHANICAL ROOMS AND OTHER SIMILAR SPACES ARE EXPOSED TO STRUCTURE ABOVE UNLESS NOTED OR SCHEDULED OTHERWISE.
9. SEE MECHANICAL DRAWINGS FOR DIFFUSER AND GRILLE LOCATIONS, INFORMATION SHOWN HERE IS FOR REFERENCE ONLY.
10. SEE ELECTRICAL DRAWINGS FOR LIGHT FIXTURE LOCATIONS, INFORMATION SHOWN HERE IS FOR REFERENCE ONLY.
11. ALL LIGHTING TO BE CENTERED OR SET IN CEILING GRID UNLESS NOTED OTHERWISE.
12. ALL SPRINKLER HEADS ARE TO BE CENTERED IN CEILING GRID UNLESS NOTED OTHERWISE.
13. ALL FIRE RATED WALLS TO BE LABELED AS FIRE RATED. LABEL TO BE PLACED ABOVE CEILING LINE.

SHEET NOTES

NOTE: THESE NOTES APPLY TO THIS SHEET ONLY.

1. BULKHEAD - SEE DETAIL ON A541
2. LIGHT FIXTURE, COORDINATE WITH ELECTRICAL
3. HVAC DUCT, COORDINATE WITH MECHANICAL
4. SURVEILLANCE CAMERAS, COORDINATE WITH ELECTRICAL
5. MANUAL WINDOW SHADES WITH BLACKOUTS
6. MANUAL ROLLER WINDOW SHADES
7. RECESS IN CEILING TO ACCOMMODATE A FLUSH MOUNTED LIGHT BETWEEN THE PERFORATED METAL LOBBY WALL AND RECLAIMED BRICK, COORDINATE FINAL SIZE AND DEPTH WITH ARCHITECTURAL DETAILING AND LIGHTING FIXTURE

REFLECTED CEILING LEGEND

ACT-1	2X2' ACOUSTICAL CEILING TILE
GB-1	5/8" GYPSUM BOARD WITH SMOOTH LEVEL 5 FINISH - PAINTED "P-01"
OTS	AREA OF CEILING THAT IS OPEN TO STRUCTURE WITH NO PAINT.
OTS-P	OPEN TO STRUCTURE - ALL ELEMENTS PAINTED "P-01" - SEE FINISH SCHEDULE. COORDINATE TRANSITION LINE WITH ARCHITECT
OTS-P2	OPEN TO STRUCTURE - ALL ELEMENTS PAINTED "P-02" - SEE FINISH SCHEDULE. COORDINATE TRANSITION LINE WITH ARCHITECT

AT WALKING SURFACE OR CIRCULATION ROUTE NO SUSPENDED LIGHT FIXTURE, DECORATIVE ITEM OR SIMILAR DECORATIVE ITEMS SHALL BE INSTALLED LOWER THAN 80" A.F.F.

NO DEVICE OR DECORATIVE OBJECT LESS THAN 80" A.F.F. SHALL PROJECT MORE THAN 4" FROM ANY WALL IN ANY CIRCULATION PATH OR ACCESSIBLE ROUTE

ALL SPRINKLER FINISHES IN EACH CEILING TYPE TO BE VERIFIED BY ARCHITECT

Babcock Design

Salt Lake City
52 Exchange Place
Salt Lake City, UT 84111
801.531.1144

Boise
800 W Main Street, Suite 940
Boise, ID 83702
208.424.7675

babcock**design**.com

Consultant

CITY OF ALPINE

ALPINE FIRE STATION #202

50 E 100 N ALPINE, UT 84004

Revisions

Num.	Description	Date

Project Number	25116
Original Issue	04.16.2026
Project Status	CONSTRUCTION DOCUMENTS

The information and content represented herein is considered by law the architect's instruments of service and shall not be used by the owner or others on other projects, for additions to this project, or for completion by consultants, contractors, government agencies, vendors, and office personnel only in accordance with this notice. They are intended for use only for the project specified and are to be used for no other purpose or project including additions to or modification of the completed project. No part thereof may be copied, reproduced, photographed, modified, published, uploaded, transmitted, disclosed, sold, distributed to others in any way including in digital form, or otherwise used without the prior written consent of Babcock Design.

COPYRIGHT © 2025 BABCOCK DESIGN

Stamp

STATE OF UTAH · ROBERT B. COTTLE · 136818 · LICENSED ARCHITECT

Sheet Title

LEVEL 1 REFLECTED CEILING PLAN

Sheet Number

A113

Original drawing is 30" x 42" Autodesk Docs://25116 - ALPINE FIRE STATION 202/25116 - Alpine Fire Station 202.rvt

Current as of: 4/15/2026 9:43:08 PM

1 LEVEL 1 - FINISHES FLOOR PLAN

1/8" = 1'-0"

FLOOR FINISH PLAN GENERAL NOTES

1. FLOOR FINISHES ARE CONTINUOUS. ALL FLOORING IS TO CONTINUE BENEATH ALL ELEMENTS IN CONTACT WITH THE FLOOR. CONTRACTOR TO COORDINATE OPENINGS AND PROVIDE FLOORING WITHIN OPENINGS NOT SPECIFICALLY IDENTIFIED.
2. ALL PRODUCTS ARE TO BE PROVIDED AND INSTALLED PER MANUFACTURERS PUBLISHED REQUIREMENTS AND FASTENED AND ADHERED ACCORDING TO APPROVED METHODS.
3. ALL EXPOSED SURFACES ARE TO BE PREPARED TO RECEIVE NEW FINISHES.
4. ALL WIRE FRAMES, CONDUIT, ACCESS PANELS, GILLES, FIRE EXTINGUISHER CABINETS, ELECTRICAL PANELS AND MECHANICAL DEVICES SHALL BE FINISHED TO MATCH THE ADJACENT SURFACE UNLESS NOTED OTHERWISE.
5. ALL PAINT IS TO CONTINUE FROM BASE OF WALL TO TOP OF WALL AND EDGE OF WALL TO EDGE OF WALL UNLESS NOTED OTHERWISE.
6. ALL CEILING ACCESS PANELS TO MATCH ADJACENT SURFACE.
7. CONTRACTOR TO REPORT ANY DISCREPANCIES IN PRODUCT QUALITY TO ARCHITECT FOR REVIEW AND APPROVAL.
8. COMMENCEMENT OF WORK ON ANY SURFACE BY THE CONTRACTOR MEANS ACCEPTANCE OF THOSE SURFACES.
9. REFER TO SHEET A540 FOR INTERIOR DETAILS.
10. REFER TO SHEET A401, A402, A403, A404 FOR INTERIOR ELEVATIONS.
11. REFER TO SHEET A113 FOR REFLECTED CEILING PLANS.
12. FLOOR TRANSITION HEIGHTS NOT TO EXCEED 1/4" MAXIMUM. PROVIDE APPROPRIATE TRANSITION AT EACH LOCATION WHERE FLOOR MATERIAL CHANGES.
13. ALL EXPOSED CMU BLOCK WALLS (PAINTED OR NOT) ARE NOT REQUIRED TO RECEIVE RUBBER BASE.
14. SEE INTERIOR ELEVATIONS FOR ADDITIONAL INFORMATION.

Babcock Design

Salt Lake City
52 Exchange Place
Salt Lake City, UT 84111
801.531.1144

Boise
800 W Main Street, Suite 940
Boise, ID 83702
208.424.7675

babcock**design**.com

Consultant

CITY OF ALPINE

ALPINE FIRE STATION #202

50 E 100 N ALPINE, UT 84004

Revisions

Num.	Description	Date

Project Number	25116
Original Issue	04.16.2026
Project Status	CONSTRUCTION DOCUMENTS

The information and content represented herein is considered by law the architect's instruments of service and are the property of Babcock Design. They are available for limited review and evaluation by clients, governmental agencies, and contractors for bidding or construction purposes on this project only as noted in this notice. They are intended for use only for the project specified and are to be used for no other purpose or project including additions to or modification of the completed project. No part thereof may be copied, reproduced, photographed, modified, published, uploaded, transmitted, disclosed, sold, distributed to others in any way including in digital form, or otherwise used without the prior written consent of Babcock Design.

COPYRIGHT © 2025 BABCOCK DESIGN

Stamp

STATE OF UTAH
ROBERT B. COTES
136918
LICENSED ARCHITECT

Sheet Title

LEVEL 1 FINISHES PLAN

Sheet Number

A114

Current as of: 4/16/2026 9:40:18 PM

Original drawing is 30" x 42" Autodesk Docs://25116 - ALPINE FIRE STATION 202/25116 - Alpine Fire Station 202.rvt

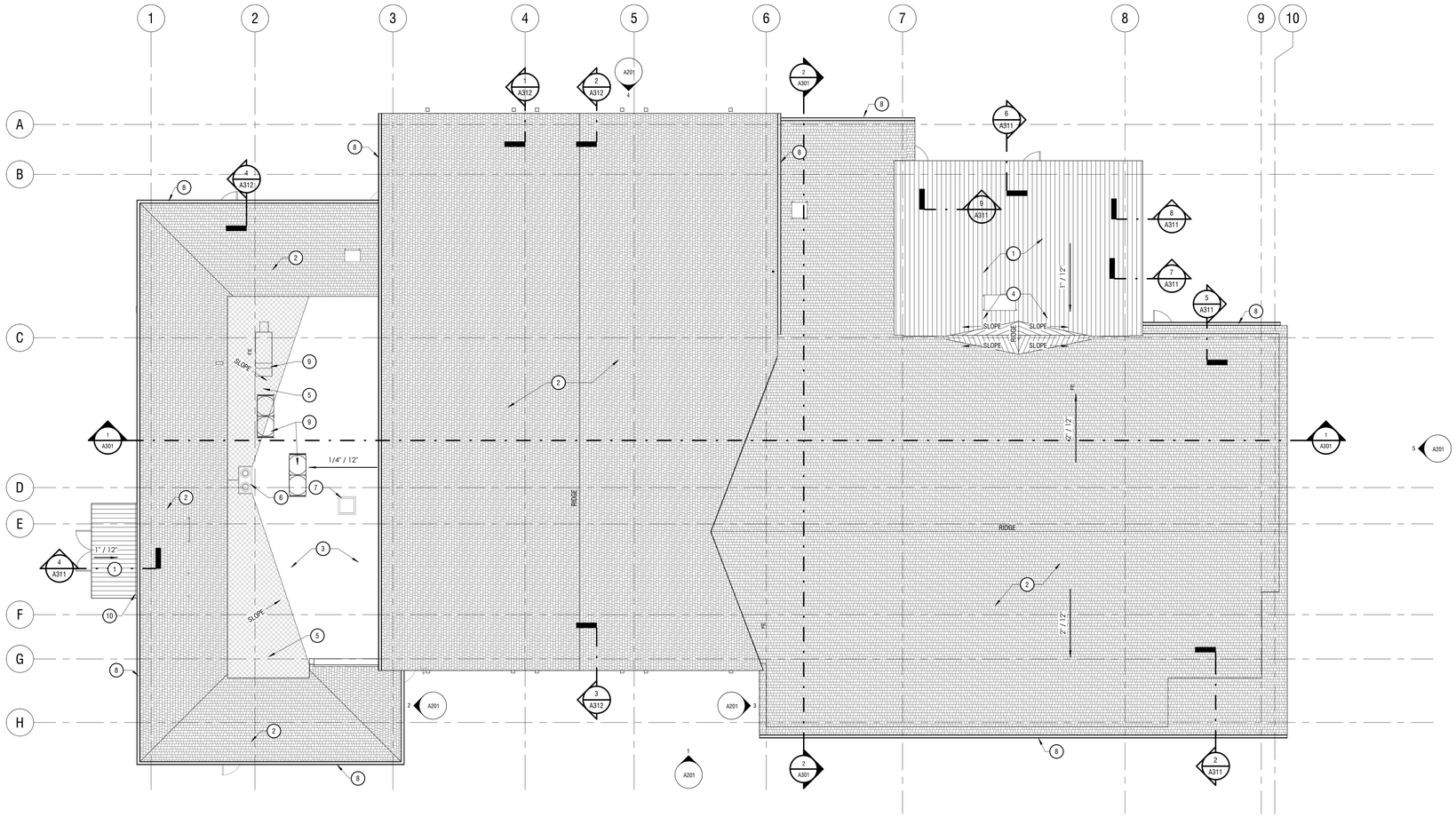

1 ROOF PLAN
1/8" = 1'-0"

ROOF PLAN GENERAL NOTES

1. DRAWINGS & SPECIFICATIONS ARE COMPLIMENTARY COMPONENTS OF THE CONTRACT DOCUMENTS, REVIEW ALL DRAWINGS AND SPECIFICATIONS FOR THE COMPLETE SCOPE OF WORK. NOTIFY ARCHITECT IMMEDIATELY FOR CLARIFICATION IF INCONSISTENCIES, CONTRADICTIONS OR OMISSIONS ARE DISCOVERED.
2. DO NOT SCALE DRAWINGS, IF DIMENSIONAL INFORMATION IS REQUIRED & NOT FOUND, NOTIFY ARCHITECT IMMEDIATELY FOR CLARIFICATION BEFORE PROCEEDING WITH CONSTRUCTION.
3. ALL DIMENSIONS ARE TO COLUMN CENTERLINES, TO GRIDLINES OR TO FACE OF FRAMING UNLESS NOTED OTHERWISE.
4. UNLESS NOTED OTHERWISE CLEAR DIMENSIONS INDICATE DIMENSION BETWEEN FINISHES.
5. CONTRACTOR SHALL NOTIFY THE ARCHITECT OF DISCREPANCIES IN THE DOCUMENTS, AND OF ANY FIELD CONDITIONS THAT DEVIATE FROM THE DOCUMENTS.
6. THE ARCHITECT'S APPROVAL MUST BE OBTAINED FOR ANY DEVIATIONS FROM THE CONSTRUCTION DOCUMENTS, INCLUDING BUT NOT LIMITED TO CHANGES IN DIMENSIONS, DESIGN, MATERIALS, PRODUCTS, AND FINISHES. IN NO CASE MAY THE CONTRACTOR MAKE THESE CHANGES WITHOUT THE APPROVAL OF THE ARCHITECT.
7. SHOP DRAWINGS AND OTHER SUBMITTALS ARE TO BE PRESENTED TO THE ARCHITECT FOR REVIEW PRIOR TO EXECUTION OF WORK. ALLOW APPROPRIATE TIME FOR REVIEW.
8. SEE DOOR AND WINDOW SCHEDULES FOR SIZES, TYPES, AND FINISHES, HARDWARE, ETC.
9. FOR BUILDING CODE REQUIREMENTS OR FIRE/SMOKE REQUIREMENTS, SEE 'G' SHEETS.
10. SEE WALL TYPE CONSTRUCTION DETAILS ON SHEET A611 AND ADDITIONAL DETAILS ON SHEETS A612 AND A613 FOR WALL TERMINATIONS, ETC.
11. ALL CONSTRUCTION SHALL CONFORM TO AND STRICTLY COMPLY WITH ALL APPLICABLE CODES, COVENANTS, RESTRICTIONS, AND OTHER REQUIREMENTS OF THE AUTHORITY HAVING JURISDICTION OVER THE PROJECT.
12. IN NO EVENT SHALL THE CONTRACTOR SUBMIT A STANDARD CONSTRUCTION DETAIL FOR A DETAIL SPECIFIED IN THESE DOCUMENTS WITHOUT THE APPROVAL IN WRITING FROM THE ARCHITECT. THE CONTRACTOR SHALL BRING ALL WORK INTO CONFORMITY WITH THE CONSTRUCTION DOCUMENTS, AS THE ARCHITECT ORDERS, BEFORE APPROVAL OF THAT PORTION OF THE PROJECT WILL BE GRANTED.
13. COORDINATE PENETRATION LOCATIONS FOR EQUIPMENT INSIDE BUILDING W/ MECHANICAL, ELECTRICAL, & PLUMBING.
14. PROVIDE CRICKETING AS REQUIRED TO REDIRECT WATER FLOW AROUND ALL ROOFTOP EQUIPMENT AND PREVENT ANY POOLING OF WATER, NOT OPTIONAL.

SHEET NOTES

NOTE: THESE NOTES APPLY TO THIS SHEET ONLY.

1 STANDING SEAM ROOF ASSEMBLY, SEE DETAILS
2 ASPHALT SHINGLED ROOF ASSEMBLY, SEE DETAILS
3 SINGLE-PLY MEMBRANE ROOF, WRAP MEMBRANE MIN. 8" UP ADJACENT WALLS
4 STANDING SEAM ROOFING OVER TAPERED CRICKET INSULATION
5 TAPERED CRICKET INSULATION
6 EXISTING ROOF DRAIN TO REMAIN
7 EXISTING ROOF HATCH
8 PRE FINISHED GUTTER AND DOWNSPOUT
9 MECHANICAL EQUIPMENT, COORDINATE WITH MECHANICAL
10 PRE FINISHED GUTTER EMBEDDED IN RIGID INSULATION, SLOPED TO SOUTH

Babcock Design

Salt Lake City
52 Exchange Place
Salt Lake City, UT 84111
801.531.1144

Boise
800 W Main Street, Suite 940
Boise, ID 83702
208.424.7675

babcock**design**.com

Consultant

CITY OF ALPINE

ALPINE FIRE STATION #202

50 E 100 N ALPINE, UT 84004

Revisions

Num.	Description	Date

Project Number	25116
Original Issue	04.16.2026
Project Status	CONSTRUCTION DOCUMENTS

The information and content represented herein is considered by law the architect's instruments of service and are the property of Babcock Design. They are available for limited review and evaluation by clients, consultants, contractors, government agencies, vendors, and office personnel only in accordance with this notice. They are intended for use only for the project specified and are to be used for no other purpose or extension without the written consent of Babcock Design. Unauthorized use, sharing, copying, scanning, reproduced, photographed, modified, published, uploaded, transmitted, disclosed, sold, distributed to others in any way including in digital form, or otherwise used without the prior written consent of Babcock Design.

COPYRIGHT © 2025 BABCOCK DESIGN

Stamp

STATE OF UTAH · HENRY B. COTTLE · 136918 · LICENSED ARCHITECT

Sheet Title

ROOF PLAN

Sheet Number

A131

Current as of: 4/6/2026 9:40:23 PM

Original drawing is 30" x 42" Autodesk Docs://25116 - ALPINE FIRE STATION 202/25116 - Alpine Fire Station 202.rvt

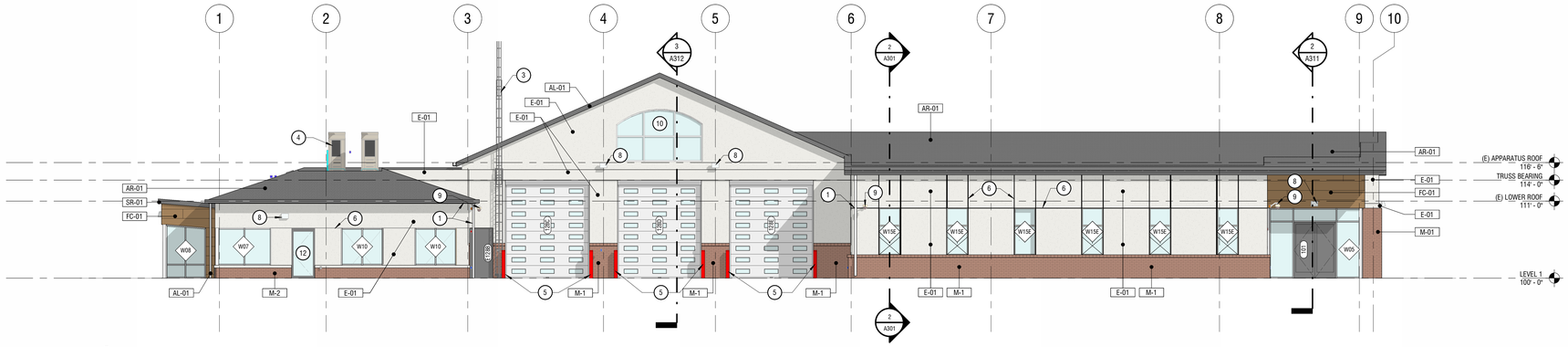

1 **SOUTH ELEVATION**
1/8" = 1'-0"

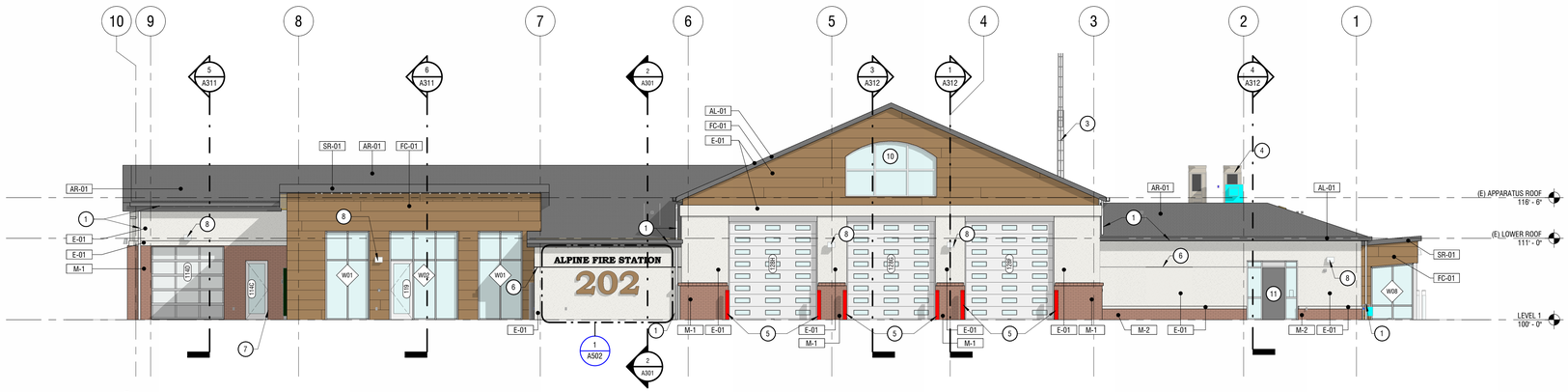

4 **NORTH ELEVATION**
1/8" = 1'-0"

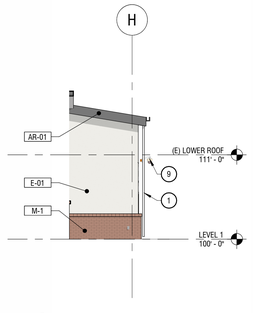

3 **FIRE STATION WEST ELEVATION**
1/8" = 1'-0"

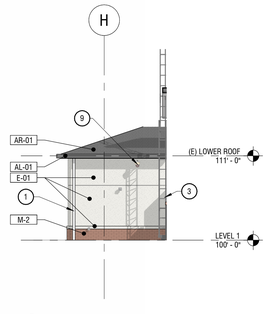

2 **COMMUNITY ROOM EAST ELEVATION**
1/8" = 1'-0"

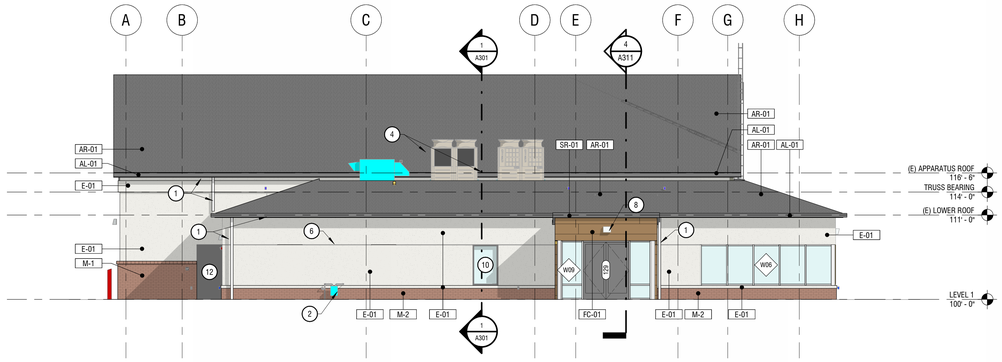

6 **WEST ELEVATION**
1/8" = 1'-0"

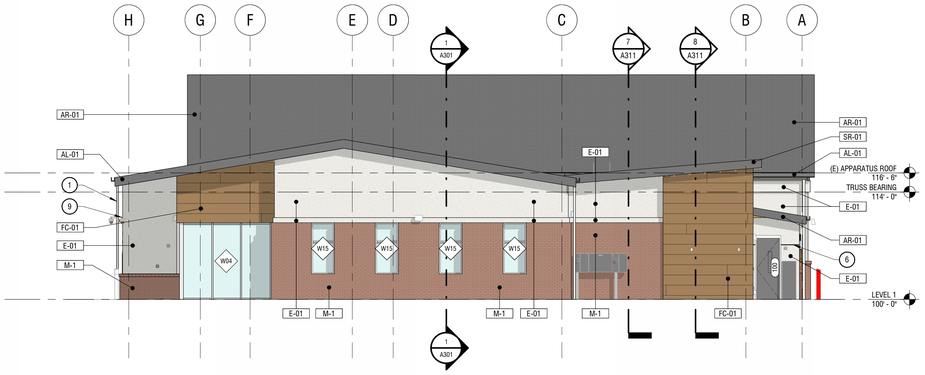

5 **EAST ELEVATION**
1/8" = 1'-0"

EXTERIOR ELEVATION GENERAL NOTES

1. REFER TO THE MATERIAL AND FINISH SCHEDULES ON SHEET A651 FOR FURTHER INFORMATION.
2. CONTRACTOR TO LEAVE A 1/2" GAP BETWEEN ALL DISSIMILAR MATERIAL TYP. TO BE FILLED WITH BACKER ROD AND SEALANT, COLOR AS SELECTED.
3. ALL EXPOSED EXTERIOR STEEL TO BE PAINTED (I.E. LINTELS, ETC.).
4. CONTRACTOR TO PAINT ALL VENT PIPES, EXHAUST FANS AND OTHER ROOF EQUIPMENT AND PENETRATIONS THAT ARE VISIBLE FROM THE SURROUNDING BUILDINGS STREET FRONTAGE.
5. SEE ELECTRICAL DRAWINGS FOR EXTERIOR POWER LOCATIONS, LIGHTING, HORN STROBES, CARD READERS, ETC.
6. SEE PLUMBING DRAWINGS FOR DOWNSPOUT NOZZLE, HOSE BIB, AND FDC CONNECTION LOCATIONS, ETC.
7. EXISTING STUCCO TO BE RE-FINISHED, PATCH AND REPAIR AS REQUIRED.

SHEET NOTES

NOTE: THESE NOTES APPLY TO THIS SHEET ONLY.

(#)

1 PRE FINISHED GUTTER AND DOWNSPOUT
2 GAS METER - COORDINATE WITH EXISTING CONDITIONS AND MECHANICAL DRAWINGS
3 EXISTING RADIO TOWER
4 MECHANICAL EQUIPMENT, COORDINATE WITH MECHANICAL
5 PAINTED STEEL BOLLARD
6 EIFS "V" GROOVE REVEAL, TYP.
7 ELECTRIC METER, COORDINATE WITH ELECTRICAL
8 LIGHT FIXTURE, COORDINATE WITH ELECTRICAL
9 SURVEILLANCE CAMERAS, COORDINATE WITH ELECTRICAL
10 EXISTING GLAZING
11 EXISTING DOOR AND GLAZING
12 EXISTING DOOR

Babcock Design

Salt Lake City
52 Exchange Place
Salt Lake City, UT 84111
801.531.1144

Boise
800 W Main Street, Suite 940
Boise, ID 83702
208.424.7675

babcock**design**.com

Consultant

CITY OF ALPINE

ALPINE FIRE STATION #202

50 E 100 N ALPINE, UT 84004

Revisions

Num.	Description	Date

Project Number	25116
Original Issue	04.16.2026
Project Status	CONSTRUCTION DOCUMENTS

The information and content represented herein is considered by law the architect's instruments of service and are the property of Babcock Design. They are available for limited review and evaluation by clients, consultants, contractors, government agencies, vendors, and office personnel only in accordance with this notice. They are intended for use only for the project specified and are to be used for no other purpose or project including additions to or modifications of the completed project. No part thereof may be copied, reproduced, published or used in any way without the express written consent of Babcock Design. Others in any way including in digital form, or otherwise used without the prior written consent of Babcock Design.

COPYRIGHT © 2025 BABCOCK DESIGN

Stamp

STATE OF UTAH
ROBERT B. COTTLE
138918
LICENSED ARCHITECT

Sheet Title

EXTERIOR ELEVATIONS

Sheet Number

A201

Current as of: 4/15/2026 8:45:51 PM
Original drawing is 30" x 42" Autodesk Docs://25116 - ALPINE FIRE STATION 202/25116 - Alpine Fire Station 202.rvt

SECTION GENERAL NOTES

1. DRAWINGS & SPECIFICATIONS ARE COMPLIMENTARY COMPONENTS OF THE CONTRACT DOCUMENTS. REVIEW ALL DRAWINGS AND SPECIFICATIONS FOR THE COMPLETE SCOPE OF WORK. NOTIFY ARCHITECT IMMEDIATELY FOR CLARIFICATION IF INCONSISTENCIES, CONTRADICTIONS OR OMISSIONS ARE DISCOVERED.
2. DO NOT SCALE DRAWINGS, IF DIMENSIONAL INFORMATION IS REQUIRED & NOT FOUND, NOTIFY ARCHITECT IMMEDIATELY FOR CLARIFICATION BEFORE PROCEEDING WITH CONSTRUCTION.
3. ALL DIMENSIONS ARE TO COLUMN CENTERLINES, TO GRIDLINES OR TO FACE OF FRAMING UNLESS NOTED OTHERWISE.
4. ALL CONSTRUCTION SHALL CONFORM TO AND STRICTLY COMPLY WITH ALL APPLICABLE CODES, COVENANTS, RESTRICTIONS, AND OTHER REQUIREMENTS OF THE AUTHORITY HAVING JURISDICTION OVER THE PROJECT.
5. IN NO EVENT SHALL THE CONTRACTOR SUBMIT A STANDARD CONSTRUCTION DETAIL FOR A DETAIL SPECIFIED IN THESE DOCUMENTS WITHOUT THE APPROVAL IN WRITING FROM THE ARCHITECT. THE CONTRACTOR SHALL BRING ALL WORK INTO CONFORMITY WITH THE CONSTRUCTION SHALL BRING ALL WORK INTO CONFORMITY WITH THE CONSTRUCTION DOCUMENTS, AS THE ARCHITECT ORDERS, BEFORE APPROVAL OF THE PORTION OF THE PROJECT WILL BE GRANTED.
6. FINISH GRADE TO BE 8" MIN. BELOW FOUNDATION WALLS. TYPICAL AT ALL LOCATIONS.

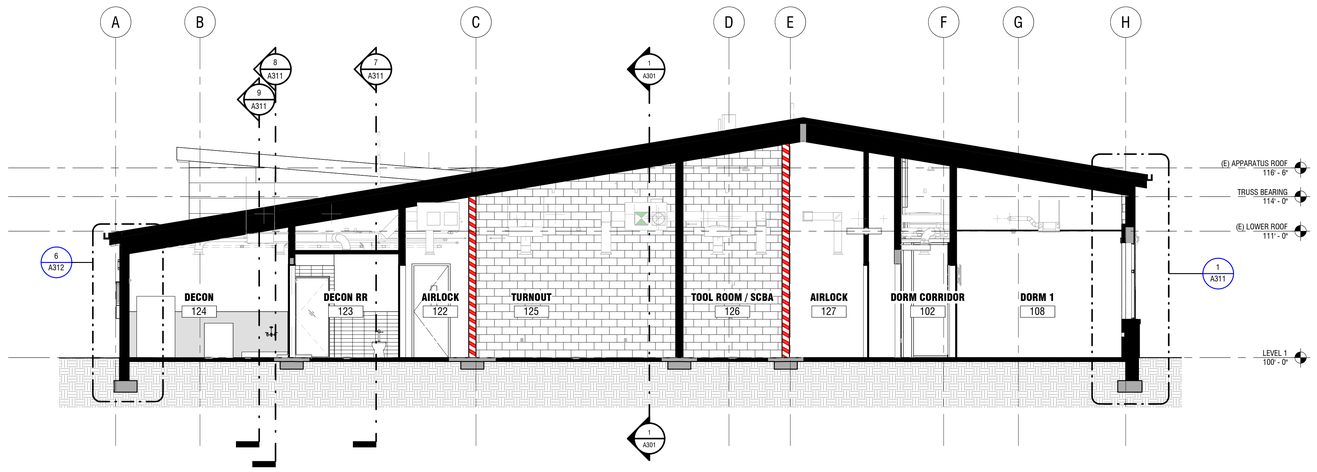

2 BUILDING SECTION - NORTH-SOUTH
3/16" = 1'-0"

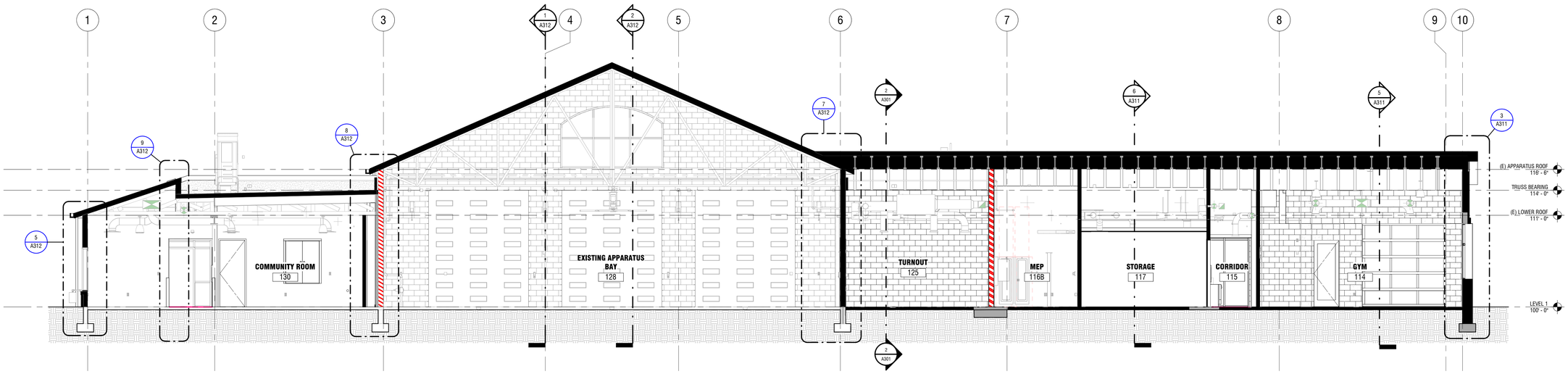

1 BUILDING SECTION - EAST-WEST
3/16" = 1'-0"

Babcock Design

Salt Lake City
52 Exchange Place
Salt Lake City, UT 84111
801.531.1144

Boise
800 W Main Street, Suite 940
Boise, ID 83702
208.424.7675

babcockdesign.com

Consultant

CITY OF ALPINE

ALPINE FIRE STATION #202

50 E 100 N ALPINE, UT 84004

Revisions

Num.	Description	Date

Project Number	25116
Original Issue	04.16.2026
Project Status	CONSTRUCTION DOCUMENTS

The information and content represented herein is considered by law the architect's instruments of service and are the property of Babcock Design. They are available for limited review and evaluation by clients, consultants, contractors, government agencies, vendors, and office personnel only in accordance with this notice. They are intended for use only for the project specified and are to be used for no other purpose or project including additions to or modification of the completed project. No part thereof may be copied, reproduced, photographed, modified, published, uploaded, transmitted, disclosed, sold, distributed to others in any way including in digital form, or otherwise used without the prior written consent of Babcock Design.

COPYRIGHT © 2025 BABCOCK DESIGN

Stamp

STATE OF UTAH
ROBERT B. COTTLE
136818
LICENSED ARCHITECT

Sheet Title

BUILDING SECTIONS

Sheet Number

A301

Current as of: 4/16/2026 9:45:59 PM

Original drawing is 30" x 42" Autodesk Docs://25116 - ALPINE FIRE STATION 202/25116 - Alpine Fire Station 202.rvt

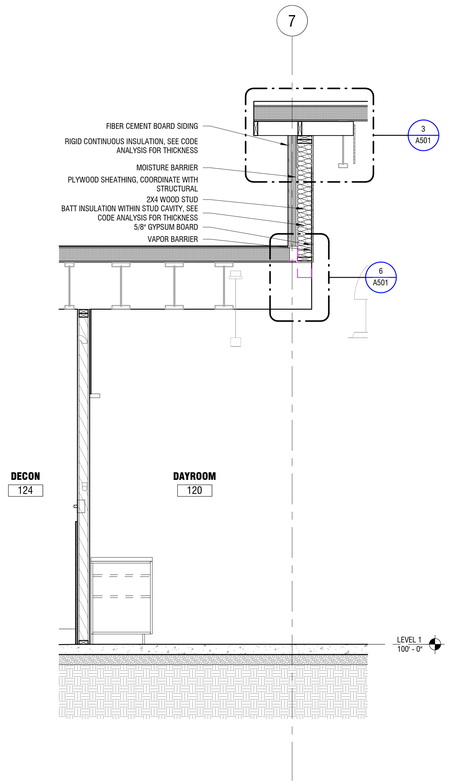

9 WALL SECTION
1/2" = 1'-0"

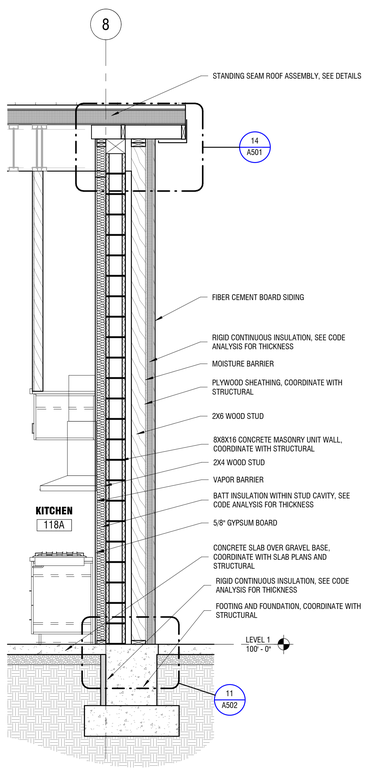

8 WALL SECTION
1/2" = 1'-0"

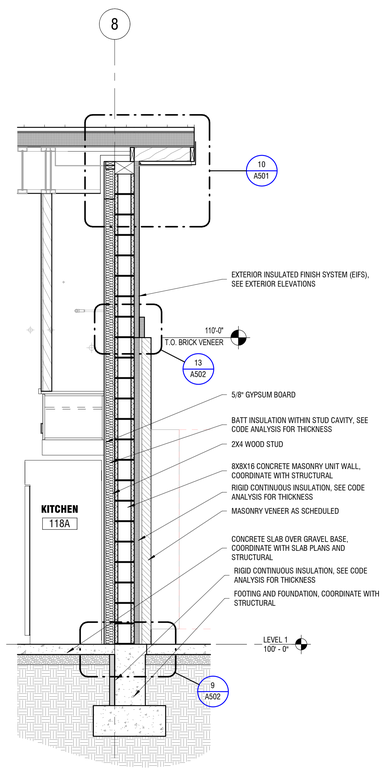

7 WALL SECTION
1/2" = 1'-0"

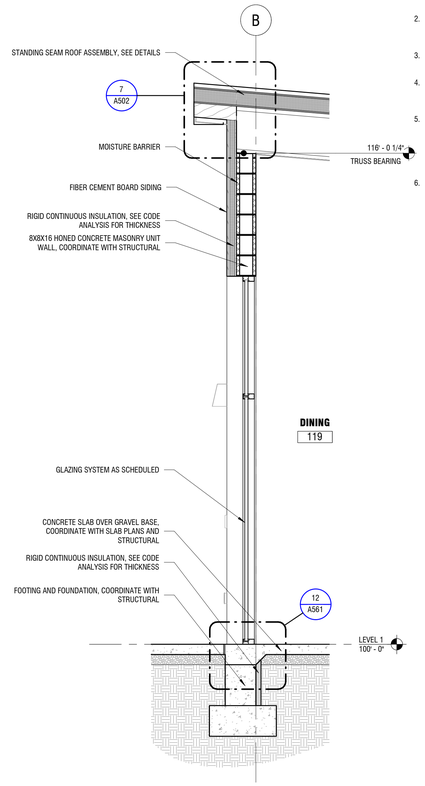

6 WALL SECTION
1/2" = 1'-0"

SECTION GENERAL NOTES

1. DRAWINGS & SPECIFICATIONS ARE COMPLIMENTARY COMPONENTS OF THE CONTRACT DOCUMENTS, REVIEW ALL DRAWINGS AND SPECIFICATIONS FOR THE COMPLETE SCOPE OF WORK. NOTIFY ARCHITECT IMMEDIATELY FOR CLARIFICATION IF INCONSISTENCIES, CONTRADICTIONS OR OMISSIONS ARE DISCOVERED.
2. DO NOT SCALE DRAWINGS, IF DIMENSIONAL INFORMATION IS REQUIRED & NOT FOUND, NOTIFY ARCHITECT IMMEDIATELY FOR CLARIFICATION BEFORE PROCEEDING WITH CONSTRUCTION.
3. ALL DIMENSIONS ARE TO COLUMN CENTERLINES, TO GRIDLINES OR TO FACE OF FRAMING UNLESS NOTED OTHERWISE.
4. ALL CONSTRUCTION SHALL CONFORM TO AND STRICTLY COMPLY WITH ALL APPLICABLE CODES, COVENANTS, RESTRICTIONS, AND OTHER REQUIREMENTS OF THE AUTHORITY HAVING JURISDICTION OVER THE PROJECT.
5. IN NO EVENT SHALL THE CONTRACTOR SUBMIT A STANDARD CONSTRUCTION DETAIL FOR A DETAIL SPECIFIED IN THESE DOCUMENTS WITHOUT THE APPROVAL IN WRITING FROM THE ARCHITECT. THE CONTRACTOR SHALL BRING ALL WORK INTO CONFORMITY WITH THE CONSTRUCTION SHALL BRING ALL WORK INTO CONFORMITY WITH THE CONSTRUCTION DOCUMENTS, AS THE ARCHITECT ORDERS, BEFORE APPROVAL OF THE PORTION OF THE PROJECT WILL BE GRANTED.
6. FINISH GRADE TO BE 8" MIN. BELOW FOUNDATION WALLS. TYPICAL AT ALL LOCATIONS.

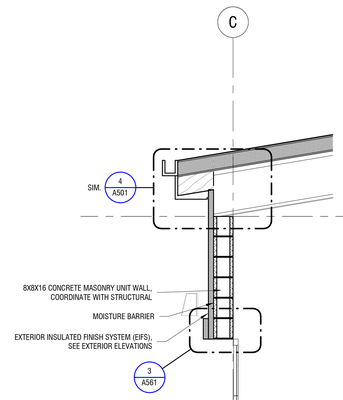

5 WALL SECTION
1/2" = 1'-0"

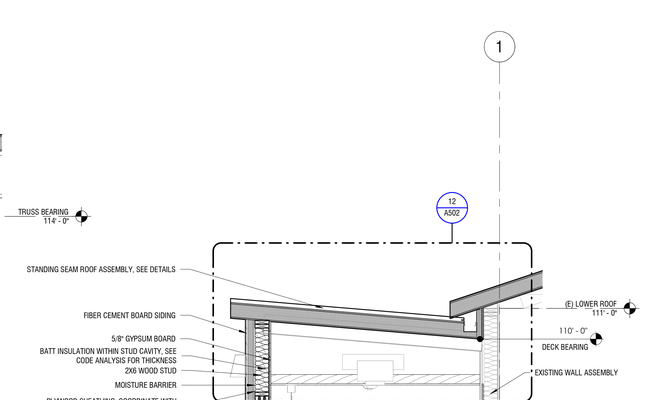

4 WALL SECTION
1/2" = 1'-0"

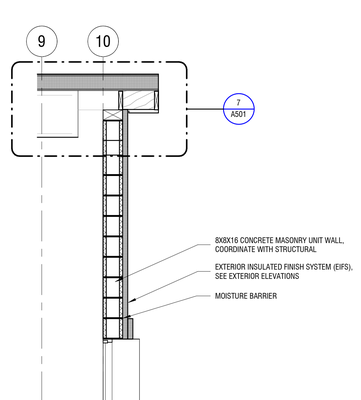

3 WALL SECTION
1/2" = 1'-0"

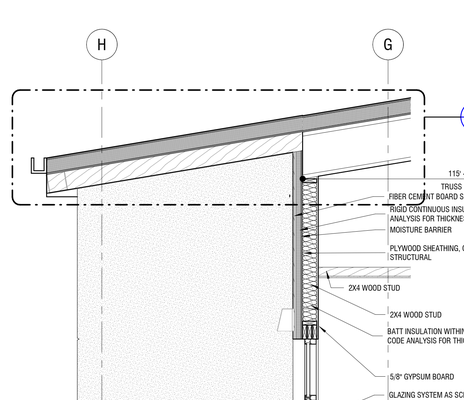

2 WALL SECTION
1/2" = 1'-0"

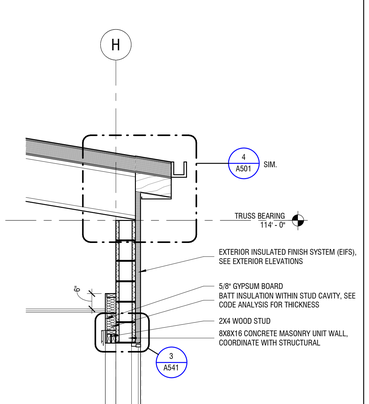

1 WALL SECTION
1/2" = 1'-0"

Babcock Design

Salt Lake City
52 Exchange Place
Salt Lake City, UT 84111
801.531.1144

Boise
800 W Main Street, Suite 940
Boise, ID 83702
208.424.7675

babcockdesign.com

Consultant

CITY OF ALPINE

ALPINE FIRE STATION #202

50 E 100 N ALPINE, UT 84004

Revisions

Num.	Description	Date

Project Number	25116
Original Issue	04.16.2026
Project Status	CONSTRUCTION DOCUMENTS

The information and content represented herein is considered by law the architect's instruments of service and are the property of Babcock Design. They are available for limited review and evaluation by clients, governmental agencies, and contractors for the purpose of bidding, permitting, and construction of this notice. They are intended for use only for the project specified and are to be used for no other purpose or project including additions to or modification of the completed project. No part thereof may be copied, reproduced, photographed, modified, published, uploaded, transmitted, disclosed, sold, distributed to others in any way including in digital form, or otherwise used without the prior written consent of Babcock Design.

COPYRIGHT © 2026 BABCOCK DESIGN

Stamp

STATE OF UTAH · ROBERT B. CHITTY · 136918 · LICENSED ARCHITECT

Sheet Title

WALL SECTIONS

Sheet Number

A311

Current as of: 4/16/2026 8:48:08 PM

Original drawing is 30" x 42" Autodesk Docs://25116 - ALPINE FIRE STATION 202/25116 – Alpine Fire Station 202.rvt

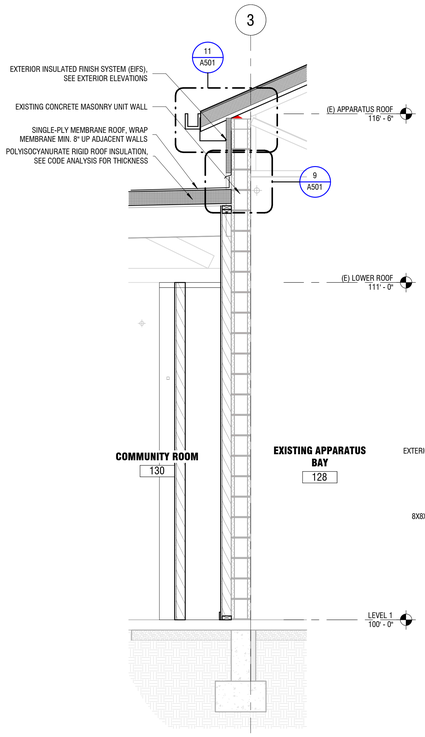

8 WALL SECTION
1/2" = 1'-0"

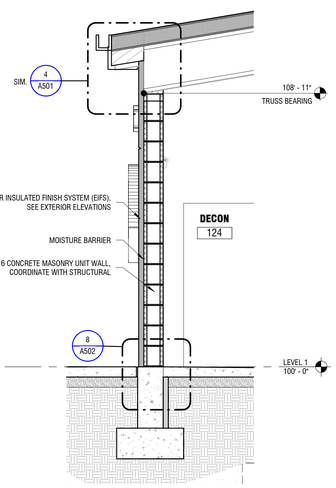

6 WALL SECTION
1/2" = 1'-0"

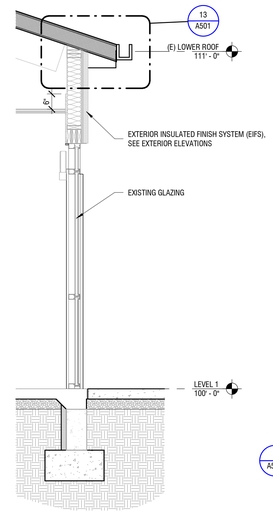

4 WALL SECTION
1/2" = 1'-0"

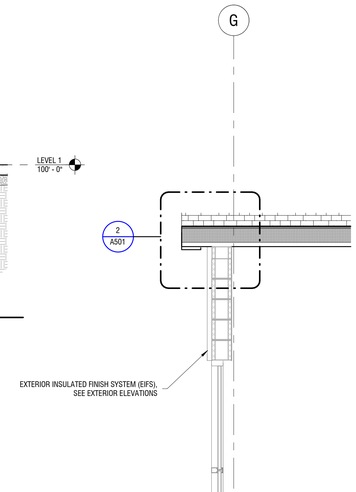

3 WALL SECTION
1/2" = 1'-0"

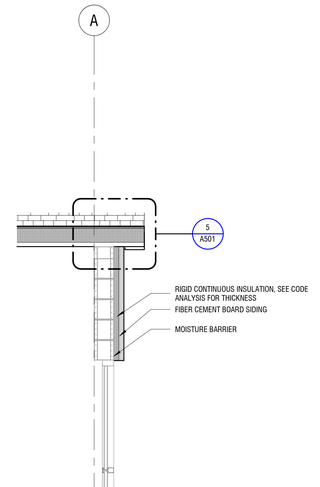

2 WALL SECTION
1/2" = 1'-0"

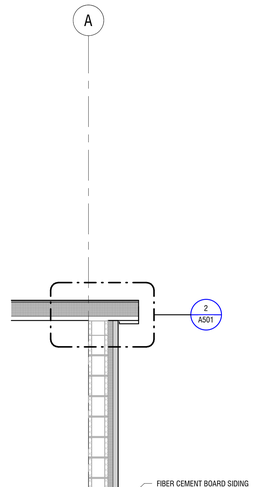

1 WALL SECTION
1/2" = 1'-0"

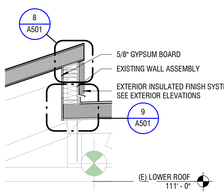

9 WALL SECTION
1/2" = 1'-0"

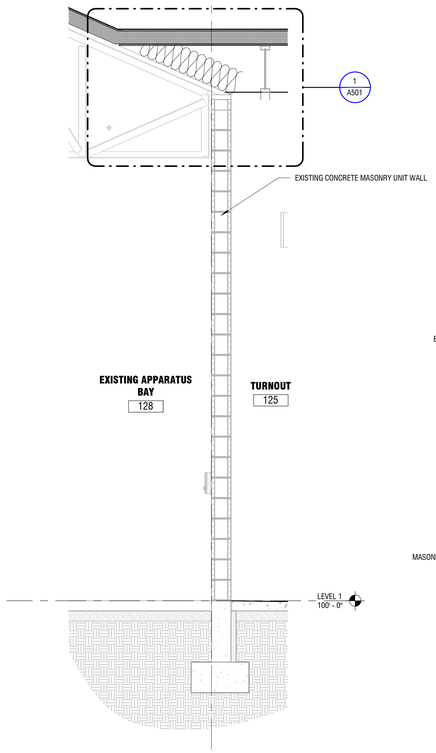

7 WALL SECTION
1/2" = 1'-0"

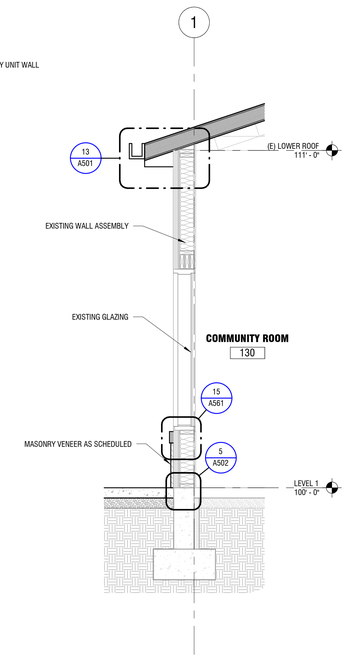

5 WALL SECTION
1/2" = 1'-0"

Current as of: 4/16/2026 9:46:19 PM

Original drawing is 30" x 42". Autodesk Docs://25116 - ALPINE FIRE STATION 202/25116 - Alpine Fire Station 202.rvt

SECTION GENERAL NOTES

1. DRAWINGS & SPECIFICATIONS ARE COMPLIMENTARY COMPONENTS OF THE CONTRACT DOCUMENTS, REVIEW ALL DRAWINGS AND SPECIFICATIONS FOR THE COMPLETE SCOPE OF WORK. NOTIFY ARCHITECT IMMEDIATELY FOR CLARIFICATION IF INCONSISTENCIES, CONTRADICTIONS OR OMISSIONS ARE DISCOVERED.
2. DO NOT SCALE DRAWINGS, IF DIMENSIONAL INFORMATION IS REQUIRED & NOT FOUND, NOTIFY ARCHITECT IMMEDIATELY FOR CLARIFICATION BEFORE PROCEEDING WITH CONSTRUCTION.
3. ALL DIMENSIONS ARE TO COLUMN CENTERLINES, TO GRIDLINES OR TO FACE OF FRAMING UNLESS NOTED OTHERWISE.
4. ALL CONSTRUCTION SHALL CONFORM TO AND STRICTLY COMPLY WITH ALL APPLICABLE CODES, COVENANTS, RESTRICTIONS, AND OTHER REQUIREMENTS OF THE AUTHORITY HAVING JURISDICTION OVER THE PROJECT.
5. IN NO EVENT SHALL THE CONTRACTOR SUBMIT A STANDARD CONSTRUCTION DETAIL FOR A DETAIL SPECIFIED IN THESE DOCUMENTS WITHOUT THE APPROVAL IN WRITING FROM THE ARCHITECT. THE CONTRACTOR SHALL BRING ALL WORK INTO CONFORMITY WITH THE CONSTRUCTION SHALL BRING ALL WORK INTO CONFORMITY WITH THE CONSTRUCTION DOCUMENTS, AS THE ARCHITECT ORDERS, BEFORE APPROVAL OF THE PORTION OF THE PROJECT WILL BE GRANTED.
6. FINISH GRADE TO BE 8" MIN. BELOW FOUNDATION WALLS. TYPICAL AT ALL LOCATIONS.

Babcock Design

Salt Lake City
52 Exchange Place
Salt Lake City, UT 84111
801.531.1144

Boise
800 W Main Street, Suite 940
Boise, ID 83702
208.424.7675

babcock**design**.com

Consultant

CITY OF ALPINE

ALPINE FIRE STATION #202

50 E 100 N ALPINE, UT 84004

Revisions

Num.	Description	Date

Project Number	25116
Original Issue	04.16.2026
Project Status	CONSTRUCTION DOCUMENTS

The information and content represented herein is considered by law the architect's instruments of service and are the property of Babcock Design. They are available for limited review and evaluation by clients, consultants, contractors, government agencies, vendors, and office personnel only in accordance with this notice. They are intended for use only for the project specified and are to be used for no other purpose or location without the written permission of Babcock Design. Unauthorized use, sale, or transfer, or copying, reproduced, photographed, modified, published, uploaded, transmitted, disclosed, sold, distributed to others in any way including in digital form, or otherwise used without the prior written consent of Babcock Design.

COPYRIGHT © 2025 BABCOCK DESIGN

Stamp

STATE OF UTAH
HENRY R. COPES
136918
LICENSED ARCHITECT

Sheet Title

WALL SECTIONS

Sheet Number

A312

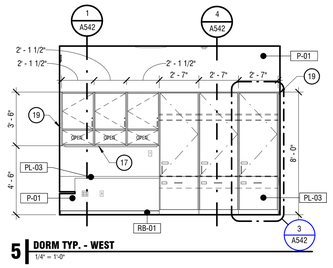

5 DORM TYP. - WEST
1/4" = 1'-0"

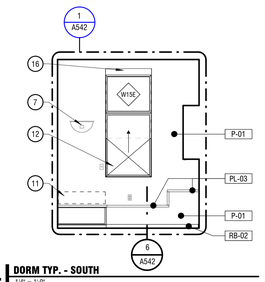

4 DORM TYP. - SOUTH
1/4" = 1'-0"

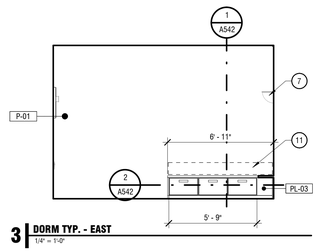

3 DORM TYP. - EAST
1/4" = 1'-0"

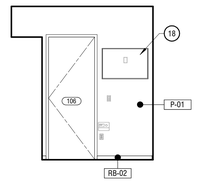

2 DORM TYP. - NORTH
1/4" = 1'-0"

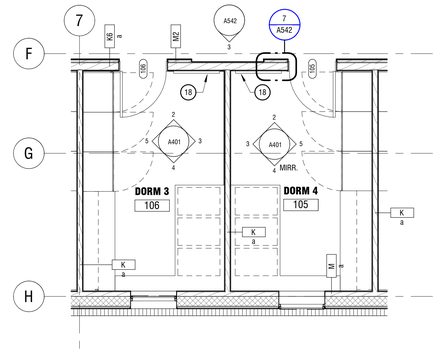

1 ENLARGED PLAN - DORM SET TYP.
1/4" = 1'-0"

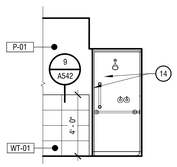

11 SHOWER HEAD ELEVATION
1/4" = 1'-0"

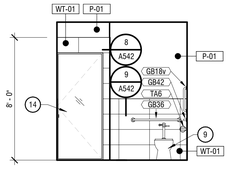

10 DORM RESTROOM TYP. - NORTH
1/4" = 1'-0"

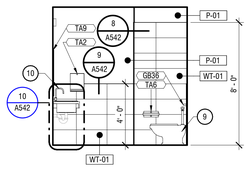

9 DORM RESTROOM TYP. - WEST
1/4" = 1'-0"

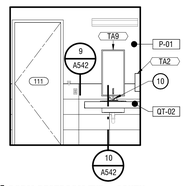

8 DORM RESTROOM TYP. - SOUTH
1/4" = 1'-0"

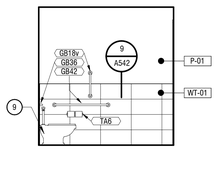

7 DORM RESTROOM TYP. - EAST
1/4" = 1'-0"

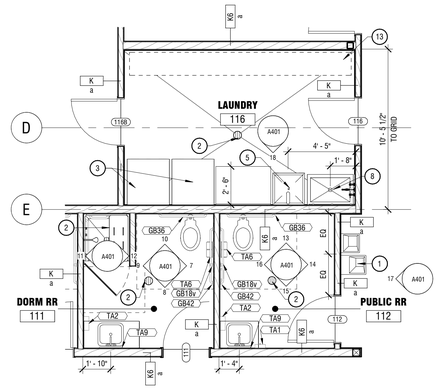

6 ENLARGED PLAN - DORM RESTROOM TYP., PUBLIC RESTROOM, AND LAUNDRY
1/4" = 1'-0"

16 PUBLIC RESTROOM 112 - WEST
1/4" = 1'-0"

15 PUBLIC RESTROOM 112 - SOUTH
1/4" = 1'-0"

14 PUBLIC RESTROOM 112 - EAST
1/4" = 1'-0"

13 PUBLIC RESTROOM 112 - NORTH
1/4" = 1'-0"

12 SHOWER BENCH ELEVATION
1/4" = 1'-0"

18 LAUNDRY 116 - SOUTH
1/4" = 1'-0"

17 DRINKING FOUNTAIN WALL
1/4" = 1'-0"

FLOOR PLAN / INTERIOR ELEVATION GENERAL NOTES

1. REFER TO THE MATERIAL AND FINISH SCHEDULES ON SHEET A651 FOR FURTHER INFORMATION.
2. DRAWINGS & SPECIFICATIONS ARE COMPLIMENTARY COMPONENTS OF THE CONTRACT DOCUMENTS, REVIEW ALL DRAWINGS AND SPECIFICATIONS FOR THE COMPLETE SCOPE OF WORK. NOTIFY ARCHITECT IMMEDIATELY FOR CLARIFICATION IF INCONSISTENCIES, CONTRADICTIONS OR OMISSIONS ARE DISCOVERED.
3. DO NOT SCALE DRAWINGS, IF DIMENSIONAL INFORMATION IS REQUIRED & NOT FOUND, NOTIFY ARCHITECT IMMEDIATELY FOR CLARIFICATION BEFORE PROCEEDING WITH CONSTRUCTION.
4. ALL DIMENSIONS ARE TO COLUMN CENTERLINES, TO GRIDLINES OR TO FACE OF FRAMING UNLESS NOTED OTHERWISE.
5. UNLESS NOTED OTHERWISE CLEAR DIMENSIONS INDICATE DIMENSION BETWEEN FINISHES.
6. CONTRACTOR SHALL NOTIFY THE ARCHITECT OF DISCREPANCIES IN THE DOCUMENTS, AND OF ANY FIELD CONDITIONS THAT DEVIATE FROM THE DOCUMENTS.
7. THE ARCHITECT'S APPROVAL MUST BE OBTAINED FOR ANY DEVIATIONS FROM THE CONSTRUCTION DOCUMENTS, INCLUDING BUT NOT LIMITED TO CHANGES IN DIMENSIONS, DESIGN, MATERIALS, PRODUCTS, AND FINISHES. IN NO CASE MAY THE CONTRACTOR MAKE THESE CHANGES WITHOUT THE APPROVAL OF THE ARCHITECT.
8. SHOP DRAWINGS AND OTHER SUBMITTALS ARE TO BE PRESENTED TO THE ARCHITECT FOR REVIEW PRIOR TO EXECUTION OF WORK. ALLOW APPROPRIATE TIME FOR REVIEW.
9. SEE DOOR AND WINDOW SCHEDULES FOR SIZES, TYPES, AND FINISHES, HARDWARE, ETC.
10. FOR BUILDING CODE REQUIREMENTS OR FIRE/SMOKE REQUIREMENTS, SEE 'G' SHEETS.
11. ALL FIRE RATED WALLS TO BE LABELED AS FIRE RATED. LABEL TO BE PLACED ABOVE CEILING LINE.
12. SEE WALL TYPE CONSTRUCTION DETAILS ON SHEET A611 AND ADDITIONAL DETAILS ON SHEETS A612 AND A613 FOR WALL TERMINATIONS, ETC.
13. HINGE SIDE OF DOORS ARE LOCATED 4" FROM ADJACENT WALL UNLESS NOTED OTHERWISE.
14. ANY COLUMN FURRING TO BE TIGHT TO COLUMN UNO.
15. ALL CONSTRUCTION SHALL CONFORM TO AND STRICTLY COMPLY WITH ALL APPLICABLE CODES, COVENANTS, RESTRICTIONS, AND OTHER REQUIREMENTS OF THE AUTHORITY HAVING JURISDICTION OVER THE PROJECT.
16. IN NO EVENT SHALL THE CONTRACTOR SUBMIT A STANDARD CONSTRUCTION DETAIL FOR A DETAIL SPECIFIED IN THESE DOCUMENTS WITHOUT THE APPROVAL IN WRITING FROM THE ARCHITECT. THE CONTRACTOR SHALL BRING ALL WORK INTO CONFORMITY WITH THE CONSTRUCTION DOCUMENTS, AS THE ARCHITECT ORDERS, BEFORE APPROVAL OF THAT PORTION OF THE PROJECT WILL BE GRANTED.
17. BRACE ALL CEILINGS AND NON-LOAD BEARING WALLS AS REQUIRED.
18. CONTRACTOR TO COORDINATE ALL FLOOR PENETRATIONS WITH ALL TRADES. ALL PENETRATIONS ARE TO BE 2-HOUR FIRE STOPPED.
19. COORDINATE WITH ELECTRICAL DRAWINGS FOR POWER, DATA, AND OTHER SYSTEM LOCATIONS AND REQUIREMENTS.
20. THE FURNITURE AND OTHER F.F.E. SHOWN ON DRAWINGS IS SCHEMATIC AND IS ONLY TO BE USED FOR REFERENCE ONLY. THE CONTRACTOR SHALL COORDINATE THE FINAL LOCATION OF ELECTRICAL OUTLETS AND OTHER NEEDS WITH THE OWNER AND ARCHITECT, PRIOR TO INSTALLATION.

FIRE RATING LEGEND

NOT ALL FIRE RATINGS MAY BE USED ON THIS PROJECT. DRAWINGS SHOULD BE VIEWED/PRINTED IN COLOR TO ACCURATELY DEPICT THE RATED WALL CONDITION.

1-HR FIRE BARRIER/PARTITION *(IBC 707, 708)*

2-HR FIRE BARRIER *(IBC 707)*

SHEET NOTES

NOTE: THESE NOTES APPLY TO THIS SHEET ONLY.

1 DRINKING FOUNTAIN, COORDINATE WITH MECHANICAL
2 FLOOR DRAIN, COORDINATE WITH MECHANICAL
3 WASHER N.I.C., COORDINATE WITH MECHANICAL AND ELECTRICAL FOR ROUGH IN REQUIREMENTS
4 DRYER N.I.C., COORDINATE WITH MECHANICAL AND ELECTRICAL FOR ROUGH IN REQUIREMENTS
5 UTILITY SINK, COORDINATE WITH MECHANICAL
6 MOP SINK, COORDINATE WITH MECHANICAL
7 LIGHT FIXTURE, COORDINATE WITH ELECTRICAL
8 FLOOR SINK, COORDINATE WITH MECHANICAL
9 TOILET, COORDINATE WITH MECHANICAL
10 LAVATORY, COORDINATE WITH MECHANICAL
11 MATTRESS BY OWNER
12 OPERABLE EGRESS WINDOW - SEE PLAN AND WINDOW SCHEDULE
13 OWNER PROVIDED RACKING
14 SHOWER INSERT WITH GLASS DOOR - SEE SPECIFICATIONS
15 FAUCET
16 MANUAL ROLLER WINDOW SHADES
17 RECESS IN CEILING TO ACCOMMODATE A FLUSH MOUNTED LIGHT BETWEEN THE PERFORATED METAL LOBBY WALL AND RECLAIMED BRICK, COORDINATE FINAL SIZE AND DEPTH WITH ARCHITECTURAL DETAILING AND LIGHTING FIXTURE
18 TV, N.I.C., COORDINATE WITH ELECTRICAL
19 PROVIDE FILLER TO MATCH ADJACENT CASEWORK

ACCESSORY SCHEDULE

MARK	DESCRIPTION	RESPONSIBILITY
EQ-01	ICE MAKER	CFCI
GB14	GRAB BAR - 22"	CFCI
GB18v	GRAB BAR - 18" MOUNTED VERTICAL	CFCI
GB32	GRAB BAR - 32"	CFCI
GB36	GRAB BAR - 36"	CFCI
GB42	GRAB BAR - 42"	CFCI
TA1	SOAP DISPENSER - LIQUID	CFCI
TA2	PAPER TOWEL DISPENSER - SURFACE MOUNT	CFCI
TA6	TOILET TISSUE DISPENSER (DOUBLE)	CFCI
TA8	FEMININE NAPKIN DISPOSAL	CFCI
TA9	MIRROR	CFCI
TA-11	MOP-BROOM RACK	CFCI
TB	TACK BOARD	OFCI

CASEWORK SCHEDULE

TYPE	DESCRIPTION
BASE CABINET	
B03	BASE CABINET W/ (2) DOORS
B07	BASE CABINET W/ MICROWAVE SHELF - CABINET TO HAVE FINISHED INTERIOR
B12	BASE CABINET W/ (2) LATERAL FILE DRAWERS
B14	BASE CABINET W/ (2) DRAWERS + LATERAL FILE DRAWER
B15	BASE CABINET W/ (3) DRAWERS
B15r	BASE CABINET W/ (2) DRAWERS + FALSE FRONT DRAWER
B16	BASE CABINET W/ (4) DRAWER
B25	SINK CABINET WITH (2) DOORS
B31	BASE CABINET - WASTE PULLOUT
SHELVES	
S01	FLOATING SHELF
TALL CABINET	
T03	TALL CABINET W/ (2) DOORS
T09	TALL CABINET W/ DOORS AND APPLIANCE OPENING
UPPER CABINET	
U03	UPPER CABINET W/ (2) DOOR
U04	UPPER CABINET WITH OPEN SHELF

Babcock Design

Salt Lake City
52 Exchange Place
Salt Lake City, UT 84111
801.531.1144

Boise
800 W Main Street, Suite 940
Boise, ID 83702
208.424.7675

babcock**design**.com

Consultant

CITY OF ALPINE

ALPINE FIRE STATION #202

50 E 100 N ALPINE, UT 84004

Revisions

Num.	Description	Date

Project Number	25116
Original Issue	04.16.2026
Project Status	CONSTRUCTION DOCUMENTS

The information and content represented herein is considered by law the architect's instruments of service and are the property of Babcock Design. They are available for limited review and evaluation by clients, consultants, contractors, government agencies, vendors, and office personnel only in accordance with this notice. They are intended for use only for the project specified and are to be used for no other purpose or project including additions to or modification of the completed project. No part thereof may be copied, reproduced, photographed, modified, published, uploaded, exhibited, sold, distributed to others in any way including in digital form, or otherwise used without the prior written consent of Babcock Design.

COPYRIGHT © 2025 BABCOCK DESIGN

Stamp

STATE OF UTAH
ROBERT B. COTTLE
138918
LICENSED ARCHITECT

Sheet Title

ENLARGED FLOOR PLANS AND ELEVATIONS

Sheet Number

A401

Current as of: 4/16/2026 9:48:29 PM

Original drawing is 30" x 42" Autodesk Docs://25116 - ALPINE FIRE STATION 202/25116 - Alpine Fire Station 202.rvt

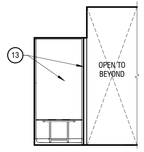

9 DECON RR 123 - SHOWER
1/4" = 1'-0"

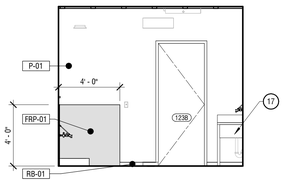

3 DECON 124 - SOUTH
1/4" = 1'-0"

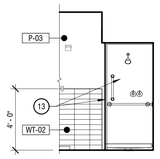

10 DECON RR 123 SHOWER (OPP).
1/4" = 1'-0"

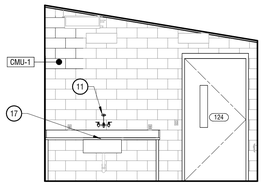

4 DECON 124 - WEST
1/4" = 1'-0"

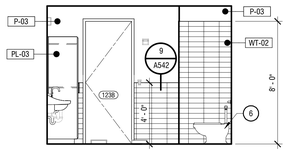

5 DECON RR 123 - NORTH
1/4" = 1'-0"

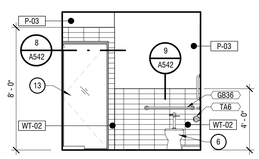

6 DECON RR 123 - EAST
1/4" = 1'-0"

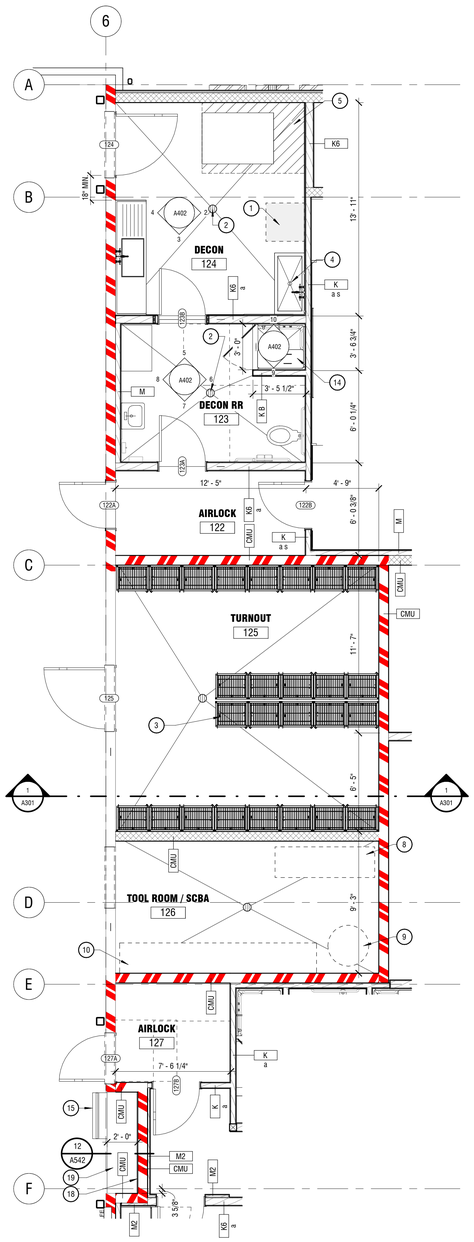

1 ENLARGED PLAN - TURNOUT / DECON AREA
1/4" = 1'-0"

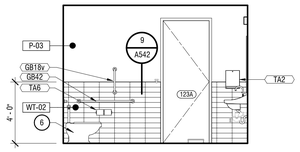

7 DECON RR 123 - SOUTH
1/4" = 1'-0"

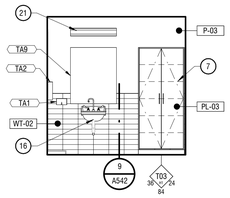

8 DECON RR 123 - WEST
1/4" = 1'-0"

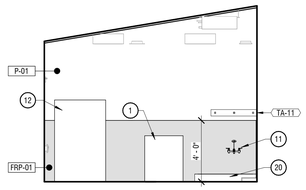

2 DECON 124 - EAST
1/4" = 1'-0"

FLOOR PLAN / INTERIOR ELEVATION GENERAL NOTES

1. REFER TO THE MATERIAL AND FINISH SCHEDULES ON SHEET A651 FOR FURTHER INFORMATION.
2. DRAWINGS & SPECIFICATIONS ARE COMPLIMENTARY COMPONENTS OF THE CONTRACT DOCUMENTS, REVIEW ALL DRAWINGS AND SPECIFICATIONS FOR THE COMPLETE SCOPE OF WORK. NOTIFY ARCHITECT IMMEDIATELY FOR CLARIFICATION IF INCONSISTENCIES, CONTRADICTIONS OR OMISSIONS ARE DISCOVERED.
3. DO NOT SCALE DRAWINGS, IF DIMENSIONAL INFORMATION IS REQUIRED & NOT FOUND, NOTIFY ARCHITECT IMMEDIATELY FOR CLARIFICATION BEFORE PROCEEDING WITH CONSTRUCTION.
4. ALL DIMENSIONS ARE TO COLUMN CENTERLINES, TO GRIDLINES OR TO FACE OF FRAMING UNLESS NOTED OTHERWISE.
5. UNLESS NOTED OTHERWISE CLEAR DIMENSIONS INDICATE DIMENSION BETWEEN FINISHES.
6. CONTRACTOR SHALL NOTIFY THE ARCHITECT OF DISCREPANCIES IN THE DOCUMENTS, AND OF ANY FIELD CONDITIONS THAT DEVIATE FROM THE DOCUMENTS.
7. THE ARCHITECT'S APPROVAL MUST BE OBTAINED FOR ANY DEVIATIONS FROM THE CONSTRUCTION DOCUMENTS, INCLUDING BUT NOT LIMITED TO CHANGES IN DIMENSIONS, DESIGN, MATERIALS, PRODUCTS, AND FINISHES. IN NO CASE MAY THE CONTRACTOR MAKE THESE CHANGES WITHOUT THE APPROVAL OF THE ARCHITECT.
8. SHOP DRAWINGS AND OTHER SUBMITTALS ARE TO BE PRESENTED TO THE ARCHITECT FOR REVIEW PRIOR TO EXECUTION OF WORK. ALLOW APPROPRIATE TIME FOR REVIEW.
9. SEE DOOR AND WINDOW SCHEDULES FOR SIZES, TYPES, AND FINISHES, HARDWARE, ETC.
10. FOR BUILDING CODE REQUIREMENTS OR FIRE/SMOKE REQUIREMENTS, SEE 'G' SHEETS.
11. ALL FIRE RATED WALLS TO BE LABELED AS FIRE RATED. LABEL TO BE PLACED ABOVE CEILING LINE.
12. SEE WALL TYPE CONSTRUCTION DETAILS ON SHEET A611 AND ADDITIONAL DETAILS ON SHEETS A612 AND A613 FOR WALL TERMINATIONS, ETC.
13. HINGE SIDE OF DOORS ARE LOCATED 4" FROM ADJACENT WALL UNLESS NOTED OTHERWISE.
14. ANY COLUMN FURRING TO BE TIGHT TO COLUMN UNO.
15. ALL CONSTRUCTION SHALL CONFORM TO AND STRICTLY COMPLY WITH ALL APPLICABLE CODES, COVENANTS, RESTRICTIONS, AND OTHER REQUIREMENTS OF THE AUTHORITY HAVING JURISDICTION OVER THE PROJECT.
16. IN NO EVENT SHALL THE CONTRACTOR SUBMIT A STANDARD CONSTRUCTION DETAIL FOR A DETAIL SPECIFIED IN THESE DOCUMENTS WITHOUT THE APPROVAL IN WRITING FROM THE ARCHITECT. THE CONTRACTOR SHALL BRING ALL WORK INTO CONFORMITY WITH THE CONSTRUCTION DOCUMENTS, AS THE ARCHITECT ORDERS, BEFORE APPROVAL OF THAT PORTION OF THE PROJECT WILL BE GRANTED.
17. BRACE ALL CEILINGS AND NON-LOAD BEARING WALLS AS REQUIRED.
18. CONTRACTOR TO COORDINATE ALL FLOOR PENETRATIONS WITH ALL TRADES. ALL PENETRATIONS ARE TO BE 2-HOUR FIRE STOPPED.
19. COORDINATE WITH ELECTRICAL DRAWINGS FOR POWER, DATA, AND OTHER SYSTEM LOCATIONS AND REQUIREMENTS.
20. THE FURNITURE AND OTHER F.F.E. SHOWN ON DRAWINGS IS SCHEMATIC AND IS ONLY TO BE USED FOR REFERENCE ONLY. THE CONTRACTOR SHALL COORDINATE THE FINAL LOCATION OF ELECTRICAL OUTLETS AND OTHER NEEDS WITH THE OWNER AND ARCHITECT, PRIOR TO INSTALLATION.

FIRE RATING LEGEND

NOT ALL FIRE RATINGS MAY BE USED ON THIS PROJECT. DRAWINGS SHOULD BE VIEWED/PRINTED IN COLOR TO ACCURATELY DEPICT THE RATED WALL CONDITION.

1-HR FIRE BARRIER/PARTITION *(IBC 707, 708)*

2-HR FIRE BARRIER *(IBC 707)*

SHEET NOTES

NOTE: THESE NOTES APPLY TO THIS SHEET ONLY.

1 DRYER N.I.C., COORDINATE WITH MECHANICAL AND ELECTRICAL FOR ROUGH IN REQUIREMENTS
2 FLOOR DRAIN. COORDINATE WITH MECHANICAL
3 TURNOUT LOCKERS, OFCI
4 FLOOR SINK, COORDINATE WITH MECHANICAL
5 HATCHED AREA INDICATES 12" THICK CONCRETE SLAB LEVEL WITH ADJACENT SURFACE TO REINFORCE WEIGHT OF EXTRACTOR - COORDINATE WITH SLAB PLANS
6 TOILET, COORDINATE WITH MECHANICAL
7 PROVIDE FILLER TO MATCH ADJACENT CASEWORK
8 FUTURE SCBA TANK REFILL STATION (NIC)- CONTRACTOR TO PROVIDE NECESSARY INFRASTRUCTURE AS REQUIRED. COORDINATE WITH MECHANICAL AND ELECTRICAL.
9 FUTURE COMPRESSOR (NIC) - CONTRACTOR TO PROVIDE NECESSARY INFRASTRUCTURE AS REQUIRED. COORDINATE WITH MECHANICAL AND ELECTRICAL
10 FUTURE WORK BENCH(ES) - (NIC)
11 FAUCET
12 EXTRACTOR N.I.C., COORDINATE WITH MECHANICAL & ELECTRICAL FOR ROUGH IN REQUIREMENTS
13 SHOWER INSERT WITH GLASS DOOR - SEE SPECIFICATIONS
14 ADA SHOWER SEAT BY OWNER
15 OWNER PROVIDED UNDER COUNTER ICE MACHINE - COORDINATE WITH ELECTRICAL AND PLUMBING DRAWINGS FOR REQUIRED POWER AND PLUMBING
16 LAVATORY, COORDINATE WITH MECHANICAL
17 CONTRACTOR PROVIDED AND INSTALLED STAINLESS STEEL COUNTER WITH INTEGRAL SINK AND DRAINBOARD
18 ABOVE COUNTER POWER BANKS FOR OWNER PROVIDED RADIO CHARGING STATIONS - COORDINATE WITH ELECTRICAL DRAWINGS
19 24" DEEP STAINLESS STEEL COUNTER WITH A 1 1/2" RETURNED FRONT EDGE
20 MOP SINK, COORDINATE WITH MECHANICAL
21 LIGHT FIXTURE, COORDINATE WITH ELECTRICAL

ACCESSORY SCHEDULE

MARK	DESCRIPTION	RESPONSIBILITY
EQ-01	ICE MAKER	CFCI
GB14	GRAB BAR - 22"	CFCI
GB18v	GRAB BAR - 18" MOUNTED VERTICAL	CFCI
GB32	GRAB BAR - 32"	CFCI
GB36	GRAB BAR - 36"	CFCI
GB42	GRAB BAR - 42"	CFCI
TA1	SOAP DISPENSER - LIQUID	CFCI
TA2	PAPER TOWEL DISPENSER - SURFACE MOUNT	CFCI
TA6	TOILET TISSUE DISPENSER (DOUBLE)	CFCI
TA8	FEMININE NAPKIN DISPOSAL	CFCI
TA9	MIRROR	CFCI
TA-11	MOP-BROOM RACK	CFCI
TB	TACK BOARD	CFCI

CASEWORK SCHEDULE

TYPE	DESCRIPTION
BASE CABINET	
B03	BASE CABINET W/ (2) DOORS
B07	BASE CABINET W/ MICROWAVE SHELF - CABINET TO HAVE FINISHED INTERIOR
B12	BASE CABINET W/ (2) LATERAL FILE DRAWERS
B14	BASE CABINET W/ (2) DRAWERS + LATERAL FILE DRAWER
B15	BASE CABINET W/ (3) DRAWERS
B15r	BASE CABINET W/ (2) DRAWERS + FALSE FRONT DRAWER
B16	BASE CABINET W/ (4) DRAWER
B25	SINK CABINET WITH (2) DOORS
B31	BASE CABINET - WASTE PULLOUT
SHELVES	
S01	FLOATING SHELF
TALL CABINET	
T03	TALL CABINET W/ (2) DOORS
T09	TALL CABINET W/ DOORS AND APPLIANCE OPENING
UPPER CABINET	
U03	UPPER CABINET W/ (2) DOOR
U04	UPPER CABINET WITH OPEN SHELF

Babcock Design

Salt Lake City
52 Exchange Place
Salt Lake City, UT 84111
801.531.1144

Boise
800 W Main Street, Suite 940
Boise, ID 83702
208.424.7675

babcock**design**.com

Consultant

CITY OF ALPINE

ALPINE FIRE STATION #202

50 E 100 N ALPINE, UT 84004

Revisions

Num.	Description	Date

Project Number	25116
Original Issue	04.16.2026
Project Status	CONSTRUCTION DOCUMENTS

The information and contract represented herein is considered by law the architect's instruments of service and are the property of Babcock Design. They are available for limited review and evaluation by clients, consultants, contractors, government agencies, vendors, and office personnel only in accordance with this notice. They are intended for use only for the project specified and are to be used for no other purpose or project including additions to or modification of the completed project. No part thereof may be copied, reproduced, photographed, modified, published, uploaded, transmitted, disclosed, sold, distributed to others in any way including in digital form, or otherwise used without the prior written consent of Babcock Design.

COPYRIGHT © 2025 BABCOCK DESIGN

Stamp

STATE OF UTAH · HENRY B. COTTLE · 136818 · LICENSED ARCHITECT

Sheet Title

ENLARGED FLOOR PLANS AND ELEVATIONS

Sheet Number

A402

Current set: 1/6/2026 9:48:47 PM
Original drawing is 30" x 42". Autodesk Docs://25116 - ALPINE FIRE STATION 202/25116 - Alpine Fire Station 202.rvt

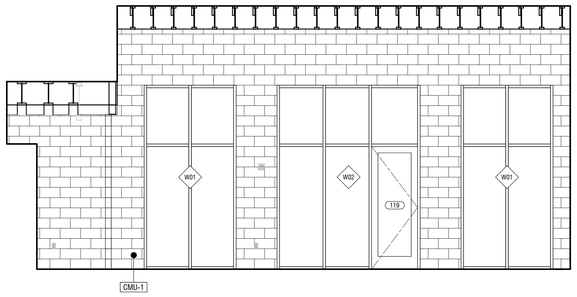

2 KITCHEN / DINING / DAYROOM - NORTH
1/4" = 1'-0"

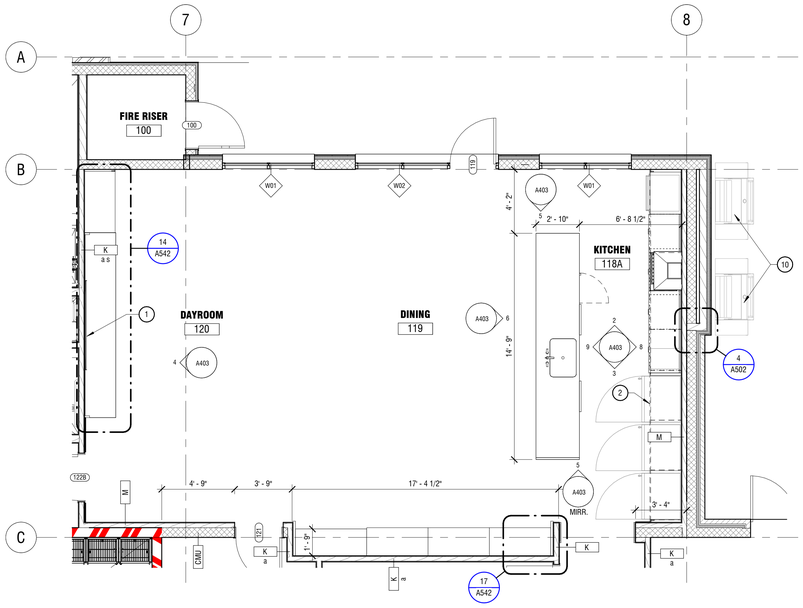

1 ENLARGED PLAN - KITCHEN / DINING / DAYROOM
1/4" = 1'-0"

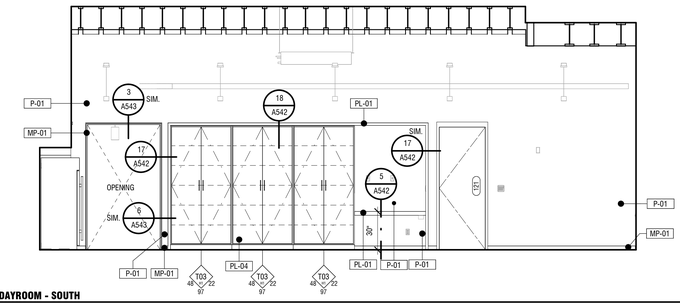

3 KITCHEN / DINING / DAYROOM - SOUTH
1/4" = 1'-0"

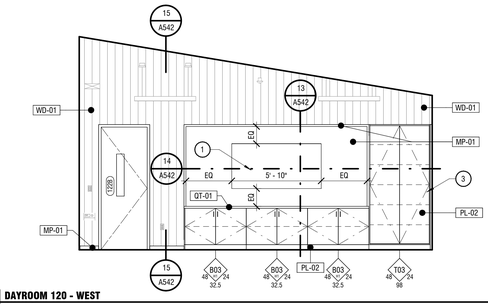

4 DAYROOM 120 - WEST
1/4" = 1'-0"

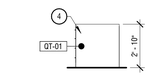

5 KITCHEN ISLAND - NORTH
1/4" = 1'-0"

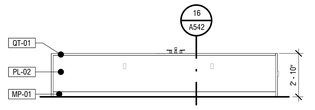

6 KITCHEN ISLAND - WEST
1/4" = 1'-0"

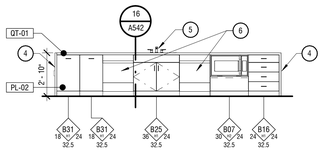

9 KITCHEN 118 - EAST
1/4" = 1'-0"

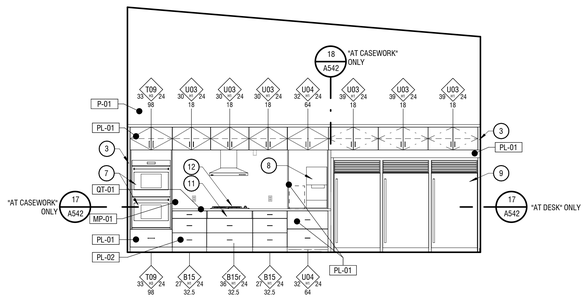

8 KITCHEN 118 - WEST
1/4" = 1'-0"

FLOOR PLAN / INTERIOR ELEVATION GENERAL NOTES

1. REFER TO THE MATERIAL AND FINISH SCHEDULES ON SHEET A651 FOR FURTHER INFORMATION.
2. DRAWINGS & SPECIFICATIONS ARE COMPLIMENTARY COMPONENTS OF THE CONTRACT DOCUMENTS, REVIEW ALL DRAWINGS AND SPECIFICATIONS FOR THE COMPLETE SCOPE OF WORK. NOTIFY ARCHITECT IMMEDIATELY FOR CLARIFICATION IF INCONSISTENCIES, CONTRADICTIONS OR OMISSIONS ARE DISCOVERED.
3. DO NOT SCALE DRAWINGS, IF DIMENSIONAL INFORMATION IS REQUIRED & NOT FOUND, NOTIFY ARCHITECT IMMEDIATELY FOR CLARIFICATION BEFORE PROCEEDING WITH CONSTRUCTION.
4. ALL DIMENSIONS ARE TO COLUMN CENTERLINES, TO GRIDLINES OR TO FACE OF FRAMING UNLESS NOTED OTHERWISE.
5. UNLESS NOTED OTHERWISE CLEAR DIMENSIONS INDICATE DIMENSION BETWEEN FINISHES.
6. CONTRACTOR SHALL NOTIFY THE ARCHITECT OF DISCREPANCIES IN THE DOCUMENTS, AND OF ANY FIELD CONDITIONS THAT DEVIATE FROM THE DOCUMENTS.
7. THE ARCHITECT'S APPROVAL MUST BE OBTAINED FOR ANY DEVIATIONS FROM THE CONSTRUCTION DOCUMENTS, INCLUDING BUT NOT LIMITED TO CHANGES IN DIMENSIONS, DESIGN, MATERIALS, PRODUCTS, AND FINISHES. IN NO CASE MAY THE CONTRACTOR MAKE THESE CHANGES WITHOUT THE APPROVAL OF THE ARCHITECT.
8. SHOP DRAWINGS AND OTHER SUBMITTALS ARE TO BE PRESENTED TO THE ARCHITECT FOR REVIEW PRIOR TO EXECUTION OF WORK. ALLOW APPROPRIATE TIME FOR REVIEW.
9. SEE DOOR AND WINDOW SCHEDULES FOR SIZES, TYPES, AND FINISHES, HARDWARE, ETC.
10. FOR BUILDING CODE REQUIREMENTS OR FIRE/SMOKE REQUIREMENTS, SEE 'G' SHEETS.
11. ALL FIRE RATED WALLS TO BE LABELED AS FIRE RATED. LABEL TO BE PLACED ABOVE CEILING LINE.
12. SEE WALL TYPE CONSTRUCTION DETAILS ON SHEET A611 AND ADDITIONAL DETAILS ON SHEETS A612 AND A613 FOR WALL TERMINATIONS, ETC.
13. HINGE SIDE OF DOORS ARE LOCATED 4" FROM ADJACENT WALL UNLESS NOTED OTHERWISE.
14. ANY COLUMN FURRING TO BE TIGHT TO COLUMN UNO.
15. ALL CONSTRUCTION SHALL CONFORM TO AND STRICTLY COMPLY WITH ALL APPLICABLE CODES, COVENANTS, RESTRICTIONS, AND OTHER REQUIREMENTS OF THE AUTHORITY HAVING JURISDICTION OVER THE PROJECT.
16. IN NO EVENT SHALL THE CONTRACTOR SUBMIT A STANDARD CONSTRUCTION DETAIL FOR A DETAIL SPECIFIED IN THESE DOCUMENTS WITHOUT THE APPROVAL IN WRITING FROM THE ARCHITECT. THE CONTRACTOR SHALL BRING ALL WORK INTO CONFORMITY WITH THE CONSTRUCTION DOCUMENTS, AS THE ARCHITECT ORDERS, BEFORE APPROVAL OF THAT PORTION OF THE PROJECT WILL BE GRANTED.
17. BRACE ALL CEILINGS AND NON-LOAD BEARING WALLS AS REQUIRED.
18. CONTRACTOR TO COORDINATE ALL FLOOR PENETRATIONS WITH ALL TRADES. ALL PENETRATIONS ARE TO BE 2-HOUR FIRE STOPPED.
19. COORDINATE WITH ELECTRICAL DRAWINGS FOR POWER, DATA, AND OTHER SYSTEM LOCATIONS AND REQUIREMENTS.
20. THE FURNITURE AND OTHER F.F.E. SHOWN ON DRAWINGS IS SCHEMATIC AND IS ONLY TO BE USED FOR REFERENCE ONLY. THE CONTRACTOR SHALL COORDINATE THE FINAL LOCATION OF ELECTRICAL OUTLETS AND OTHER NEEDS WITH THE OWNER AND ARCHITECT, PRIOR TO INSTALLATION.

FIRE RATING LEGEND

NOT ALL FIRE RATINGS MAY BE USED ON THIS PROJECT. DRAWINGS SHOULD BE VIEWED/PRINTED IN COLOR TO ACCURATELY DEPICT THE RATED WALL CONDITION.

1-HR FIRE BARRIER/PARTITION *(IBC 707, 708)*

2-HR FIRE BARRIER *(IBC 707)*

SHEET NOTES

NOTE: THESE NOTES APPLY TO THIS SHEET ONLY.

1 TV, N.I.C., COORDINATE WITH ELECTRICAL.
2 LINE OF SOFFIT ABOVE
3 PROVIDE FILLER TO MATCH ADJACENT CASEWORK
4 WATERFALL EDGE
5 FAUCET
6 DISHWASHER - C.F.C.I.
7 WALL OVEN - C.F.C.I. COORDINATE WITH MECHANICAL AND ELECTRICAL
8 ICE DISPENSER, COUNTER TOP MOUNTED. COORDINATE WITH MECHANICAL AND ELECTRICAL
9 FRIDGE (NIC) - SUPPLIED BY OWNER. COORDINATE WITH ELECTRICAL
10 GAS GRILLS BY OWNER - COORDINATE WITH MECHANICAL DRAWINGS FOR GAS LINE INFRASTRUCTURE
11 TOP DRAWER FALSE FRONT AT COOKTOP
12 COOKTOP - C.F.C.I. COORDINATE WITH ELECTRICAL AND MECHANICAL

ACCESSORY SCHEDULE

MARK	DESCRIPTION	RESPONSIBILITY
EQ-01	ICE MAKER	CFCI
GB14	GRAB BAR - 22"	CFCI
GB18r	GRAB BAR - 18" MOUNTED VERTICAL	CFCI
GB32	GRAB BAR - 32"	CFCI
GB36	GRAB BAR - 36"	CFCI
GB42	GRAB BAR - 42"	CFCI
TA1	SOAP DISPENSER - LIQUID	CFCI
TA2	PAPER TOWEL DISPENSER - SURFACE MOUNT	CFCI
TA6	TOILET TISSUE DISPENSER (DOUBLE)	CFCI
TA8	FEMININE NAPKIN DISPOSAL	CFCI
TA9	MIRROR	CFCI
TA-11	MOP-BROOM RACK	CFCI
TB	TACK BOARD	OFCI

CASEWORK SCHEDULE

TYPE	DESCRIPTION
BASE CABINET	
B03	BASE CABINET W/ (2) DOORS
B07	BASE CABINET W/ MICROWAVE SHELF - CABINET TO HAVE FINISHED INTERIOR
B12	BASE CABINET W/ (2) LATERAL FILE DRAWERS
B14	BASE CABINET W/ (2) DRAWERS + LATERAL FILE DRAWER
B15	BASE CABINET W/ (3) DRAWERS
B15r	BASE CABINET W/ (2) DRAWERS + FALSE FRONT DRAWER
B16	BASE CABINET W/ (4) DRAWER
B25	SINK CABINET WITH (2) DOORS
B31	BASE CABINET - WASTE PULLOUT
SHELVES	
S01	FLOATING SHELF
TALL CABINET	
T03	TALL CABINET W/ (2) DOORS
T09	TALL CABINET W/ DOORS AND APPLIANCE OPENING
UPPER CABINET	
U03	UPPER CABINET W/ (2) DOOR
U04	UPPER CABINET WITH OPEN SHELF

Babcock Design

Salt Lake City
52 Exchange Place
Salt Lake City, UT 84111
801.531.1144

Boise
800 W Main Street, Suite 940
Boise, ID 83702
208.424.7675

babcock**design**.com

Consultant

CITY OF ALPINE

ALPINE FIRE STATION #202

50 E 100 N ALPINE, UT 84004

Revisions

Num.	Description	Date

Project Number	25116
Original Issue	04.16.2026
Project Status	CONSTRUCTION DOCUMENTS

The information and content represented herein is considered by law the architect's instruments of service and are the property of Babcock Design. They are available for limited review and evaluation by clients, contractors, and public officials in connection with this project only and are not to be changed without this notice. They are intended for use only for the project specified and are to be used for no other purpose or project including additions to or modification of the completed project. No part thereof may be copied, reproduced, photographed, modified, published, uploaded, transmitted, disclosed, sold, distributed to others in any way including in digital form, or otherwise used without the prior written consent of Babcock Design.

COPYRIGHT © 2025 BABCOCK DESIGN

Stamp

STATE OF UTAH
ROBERT B. COTTER
136918
LICENSED ARCHITECT

Sheet Title

ENLARGED FLOOR PLANS AND ELEVATIONS

Sheet Number

A403

Original drawing is 30" x 42" Autodesk Docs://25116 - ALPINE FIRE STATION 202/25116 – Alpine Fire Station 202.rvt
Current as of: 4/16/2026 9:48:57 PM

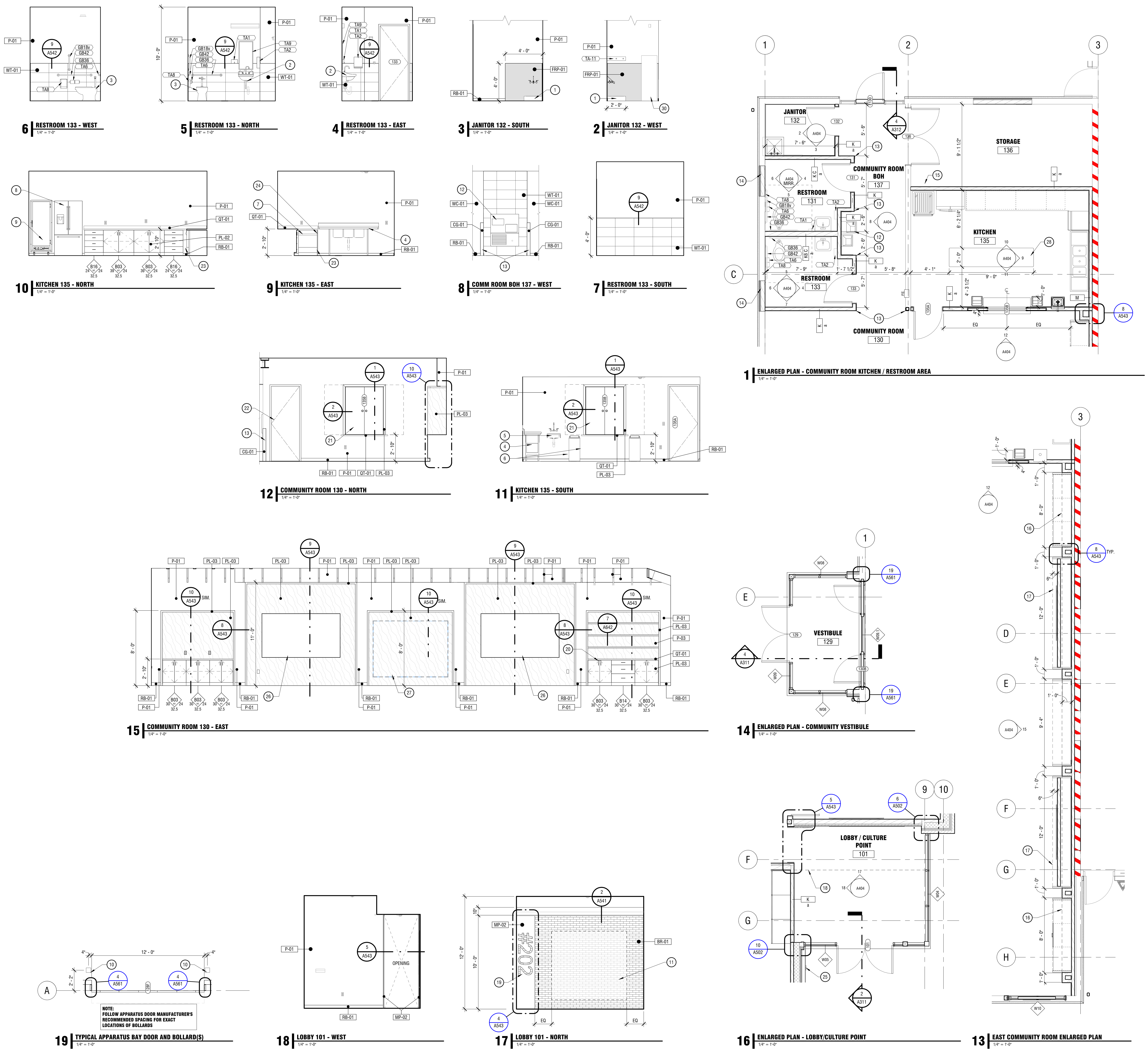

FLOOR PLAN / INTERIOR ELEVATION GENERAL NOTES

1. REFER TO THE MATERIAL AND FINISH SCHEDULES ON SHEET A651 FOR FURTHER INFORMATION.
2. DRAWINGS & SPECIFICATIONS ARE COMPLIMENTARY COMPONENTS OF THE CONTRACT DOCUMENTS, REVIEW ALL DRAWINGS AND SPECIFICATIONS FOR THE COMPLETE SCOPE OF WORK. NOTIFY ARCHITECT IMMEDIATELY FOR CLARIFICATION IF INCONSISTENCIES, CONTRADICTIONS OR OMISSIONS ARE DISCOVERED.
3. DO NOT SCALE DRAWINGS, IF DIMENSIONAL INFORMATION IS REQUIRED & NOT FOUND, NOTIFY ARCHITECT IMMEDIATELY FOR CLARIFICATION BEFORE PROCEEDING WITH CONSTRUCTION.
4. ALL DIMENSIONS ARE TO COLUMN CENTERLINES, TO GRIDLINES OR TO FACE OF FRAMING UNLESS NOTED OTHERWISE.
5. UNLESS NOTED OTHERWISE CLEAR DIMENSIONS INDICATE DIMENSION BETWEEN FINISHES.
6. CONTRACTOR SHALL NOTIFY THE ARCHITECT OF DISCREPANCIES IN THE DOCUMENTS, AND OF ANY FIELD CONDITIONS THAT DEVIATE FROM THE DOCUMENTS.
7. THE ARCHITECT'S APPROVAL MUST BE OBTAINED FOR ANY DEVIATIONS FROM THE CONSTRUCTION DOCUMENTS, INCLUDING BUT NOT LIMITED TO CHANGES IN DIMENSIONS, DESIGN, MATERIALS, PRODUCTS, AND FINISHES. IN NO CASE MAY THE CONTRACTOR MAKE THESE CHANGES WITHOUT THE APPROVAL OF THE ARCHITECT.
8. SHOP DRAWINGS AND OTHER SUBMITTALS ARE TO BE PRESENTED TO THE ARCHITECT FOR REVIEW PRIOR TO EXECUTION OF WORK. ALLOW APPROPRIATE TIME FOR REVIEW.
9. SEE DOOR AND WINDOW SCHEDULES FOR SIZES, TYPES, AND FINISHES, HARDWARE, ETC.
10. FOR BUILDING CODE REQUIREMENTS OR FIRE/SMOKE REQUIREMENTS, SEE 'G' SHEETS.
11. ALL FIRE RATED WALLS TO BE LABELED AS FIRE RATED. LABEL TO BE PLACED ABOVE CEILING LINE.
12. SEE WALL TYPE CONSTRUCTION DETAILS ON SHEET A611 AND ADDITIONAL DETAILS ON SHEETS A612 AND A613 FOR WALL TERMINATIONS, ETC.
13. HINGE SIDE OF DOORS ARE LOCATED 4" FROM ADJACENT WALL UNLESS NOTED OTHERWISE.
14. ANY COLUMN FURRING TO BE TIGHT TO COLUMN UNO.
15. ALL CONSTRUCTION SHALL CONFORM TO AND STRICTLY COMPLY WITH ALL APPLICABLE CODES, COVENANTS, RESTRICTIONS, AND OTHER REQUIREMENTS OF THE AUTHORITY HAVING JURISDICTION OVER THE PROJECT.
16. IN NO EVENT SHALL THE CONTRACTOR SUBMIT A STANDARD CONSTRUCTION DETAIL FOR A DETAIL SPECIFIED IN THESE DOCUMENTS WITHOUT THE APPROVAL IN WRITING FROM THE ARCHITECT. THE CONTRACTOR SHALL BRING ALL WORK INTO CONFORMITY WITH THE CONSTRUCTION DOCUMENTS, AS THE ARCHITECT ORDERS, BEFORE APPROVAL OF THAT PORTION OF THE PROJECT WILL BE GRANTED.
17. BRACE ALL CEILINGS AND NON-LOAD BEARING WALLS AS REQUIRED.
18. CONTRACTOR TO COORDINATE ALL FLOOR PENETRATIONS WITH ALL TRADES. ALL PENETRATIONS ARE TO BE 2-HOUR FIRE STOPPED.
19. COORDINATE WITH ELECTRICAL DRAWINGS FOR POWER, DATA, AND OTHER SYSTEM LOCATIONS AND REQUIREMENTS.
20. THE FURNITURE AND OTHER F.F.E. SHOWN ON DRAWINGS IS SCHEMATIC AND IS ONLY TO BE USED FOR REFERENCE ONLY. THE CONTRACTOR SHALL COORDINATE THE FINAL LOCATION OF ELECTRICAL OUTLETS AND OTHER NEEDS WITH THE OWNER AND ARCHITECT, PRIOR TO INSTALLATION.

FIRE RATING LEGEND

NOT ALL FIRE RATINGS MAY BE USED ON THIS PROJECT. DRAWINGS SHOULD BE VIEWED/PRINTED IN COLOR TO ACCURATELY DEPICT THE RATED WALL CONDITION.

1-HR FIRE BARRIER/PARTITION *(IBC 707, 708)*

2-HR FIRE BARRIER *(IBC 707)*

SHEET NOTES

NOTE: THESE NOTES APPLY TO THIS SHEET ONLY.

1 MOP SINK, COORDINATE WITH MECHANICAL
2 LAVATORY, COORDINATE WITH MECHANICAL
3 TOILET, COORDINATE WITH MECHANICAL
4 3 COMPARTMENT SINK, COORDINATE WITH MECHANICAL
5 HANDWASH SINK, COORDINATE WITH MECHANICAL
6 TRASH RECEPTACLE BY OWNER
7 DISHWASHER - C.F.C.I.
8 REFRIGERATOR, N.I.C., COORDINATE WITH MECHANICAL
9 WARMING OVER O.F.C.I., MODEL:
10 PAINTED STEEL BOLLARD
11 FUTURE DISPLAY BOARD - O.F.O.I.
12 DRINKING FOUNTAIN, COORDINATE WITH MECHANICAL
13 CORNER GUARD - SEE FINISH SCHEDULE
14 EXISTING STREET LIGHT TO REMAIN
15 ELECTRICAL PANEL, COORDINATE WITH ELECTRICAL
16 GYP. BOARD WALL ALIGNED WITH BOX-OUTS ABOVE (SHOWN DASHED)
17 MILLWORK ENCLOSURE OVERHEAD (SHOWN DASHED)
18 LINE OF SOFFIT ABOVE
19 RECESS IN SLAB PLAN TO ACCOMMODATE A FLUSH MOUNTED LIGHT BETWEEN THE PERFORATED METAL LOBBY WALL AND RECLAIMED BRICK, COORDINATE FINAL SIZE AND DEPTH WITH ARCHITECTURAL DETAILING AND LIGHTING FIXTURE
20 PROVIDE LOCKING CABINETS AT THIS LOCATION
21 DOUBLE ACTING POCKET DOOR OVER THRU WALL COUNTERTOP - COORDINATE WITH DETAILING
22 DOOR AS SCHEDULED
23 FILLER TO MATCH ADJACENT CASEWORK FINISH
24 3/4" FINISHED PANEL TO MATCH CASEWORK, FOR ENCLOSING DISHWASHER AND SUPPORTING COUNTERTOP EDGE
25 LOCATION FOR ADA DOOR ACTUATOR AND DOOR BELL - COORDINATE WITH ELECTRICAL DRAWINGS
26 TV, N.I.C., COORDINATE WITH ELECTRICAL.
27 AREA FOR HISTORICAL IMAGERY BY OWNER
28 STAINLESS STEEL TABLE WITH OPEN STORAGE - PROVIDED BY CONTRACTOR, INTENTIONALLY NOT SHOWN ON INTERIOR ELEVATIONS FOR CLARITY
29 MITERED TOP FRAME
30 WATER HEATER, COORDINATE WITH MECHANICAL

ACCESSORY SCHEDULE

MARK	DESCRIPTION	RESPONSIBILITY
EQ-01	ICE MAKER	CFCI
GB14	GRAB BAR - 22"	CFCI
GB18v	GRAB BAR - 18" MOUNTED VERTICAL	CFCI
GB32	GRAB BAR - 32"	CFCI
GB36	GRAB BAR - 36"	CFCI
GB42	GRAB BAR - 42"	CFCI
TA1	SOAP DISPENSER - LIQUID	CFCI
TA2	PAPER TOWEL DISPENSER - SURFACE MOUNT	CFCI
TA6	TOILET TISSUE DISPENSER (DOUBLE)	CFCI
TA8	FEMININE NAPKIN DISPOSAL	CFCI
TA9	MIRROR	CFCI
TA-11	MOP-BROOM RACK	CFCI
TB	TACK BOARD	OFCI

CASEWORK SCHEDULE

TYPE	DESCRIPTION
BASE CABINET	
B03	BASE CABINET W/ (2) DOORS
B07	BASE CABINET W/ MICROWAVE SHELF - CABINET TO HAVE FINISHED INTERIOR
B12	BASE CABINET W/ (2) LATERAL FILE DRAWERS
B14	BASE CABINET W/ (2) DRAWERS + LATERAL FILE DRAWER
B15	BASE CABINET W/ (3) DRAWERS
B15r	BASE CABINET W/ (2) DRAWERS + FALSE FRONT DRAWER
B16	BASE CABINET W/ (4) DRAWER
B25	SINK CABINET WITH (2) DOORS
B31	BASE CABINET - WASTE PULLOUT
SHELVES	
S01	FLOATING SHELF
TALL CABINET	
T03	TALL CABINET W/ (2) DOORS
T09	TALL CABINET W/ DOORS AND APPLIANCE OPENING
UPPER CABINET	
U03	UPPER CABINET W/ (2) DOOR
U04	UPPER CABINET WITH OPEN SHELF

Babcock Design

Salt Lake City
52 Exchange Place
Salt Lake City, UT 84111
801.531.1144

Boise
800 W Main Street, Suite 940
Boise, ID 83702
208.424.7675

babcockdesign.com

Consultant

CITY OF ALPINE

ALPINE FIRE STATION #202

50 E 100 N ALPINE, UT 84004

Revisions

Num.	Description	Date

Project Number 25116
Original Issue 04.16.2026
Project Status CONSTRUCTION DOCUMENTS

The information and content represented herein is considered by law the architect's instruments of service and are the property of Babcock Design. They are available for limited review and evaluation by clients, consultants, contractors, government agencies, vendors, and office personnel only in accordance with this notice. They are intended for use only for the project specified and are to be used for no other purpose or project including additions to or modification of the completed project. No part thereof may be copied, reproduced, photographed, modified, published, uploaded, transmitted, disclosed, sold, distributed to others in any way including in digital form, or otherwise used without the prior written consent of Babcock Design.

COPYRIGHT © 2025 BABCOCK DESIGN

Stamp

STATE OF UTAH ROBERT B. COTTLE 136818 LICENSED ARCHITECT

Sheet Title

ENLARGED FLOOR PLANS AND ELEVATIONS

Sheet Number

A404

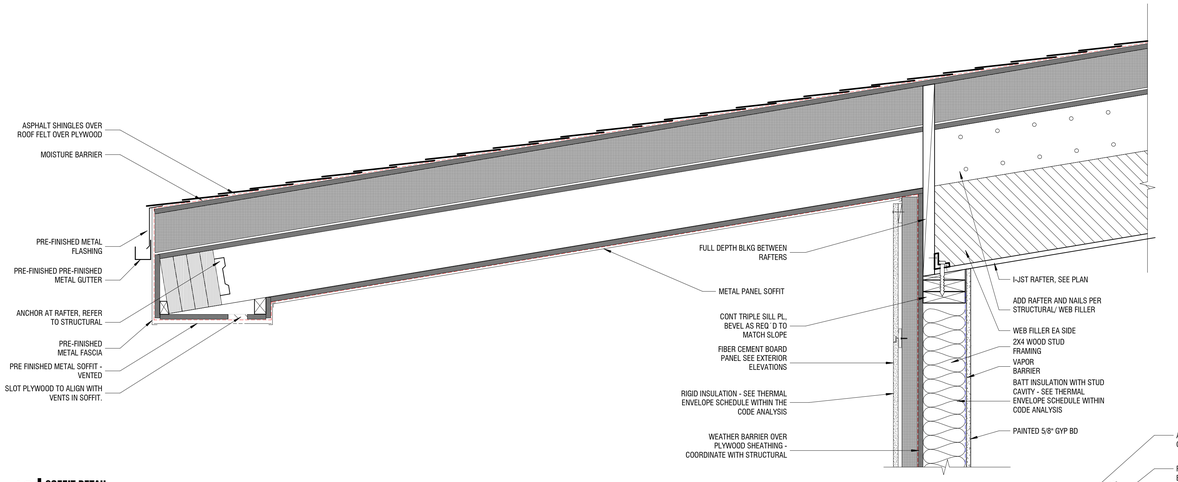

12 SOFFIT DETAIL
1 1/2" = 1'-0"

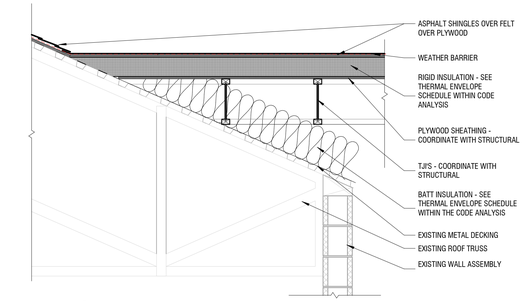

1 OVERBUILD DETAIL AT NEW ROOF TO EXISTING ROOF
3/4" = 1'-0"

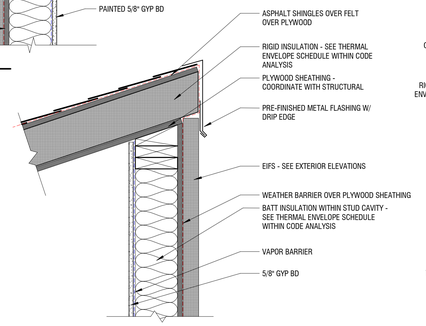

8 ROOF TO MECHANICAL WELL DETAIL
1 1/2" = 1'-0"

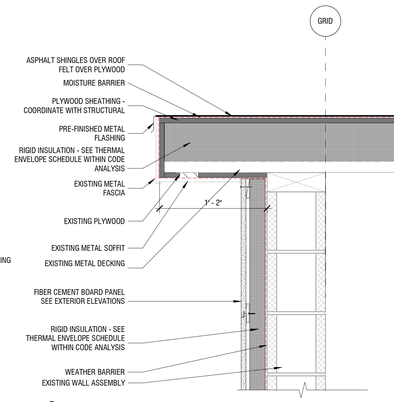

5 EXISTING ROOF FASCIA SOFFIT - ADDED FIBER CEMENT BOARD
1 1/2" = 1'-0"

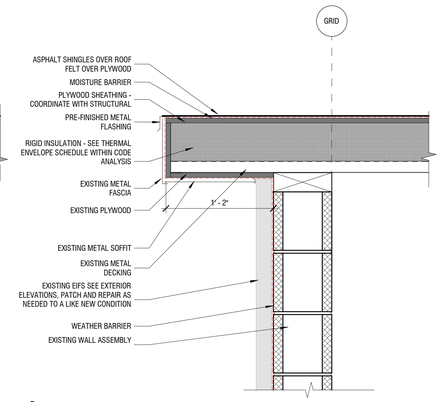

2 EXISTING ROOF FASCIA SOFFIT
1 1/2" = 1'-0"

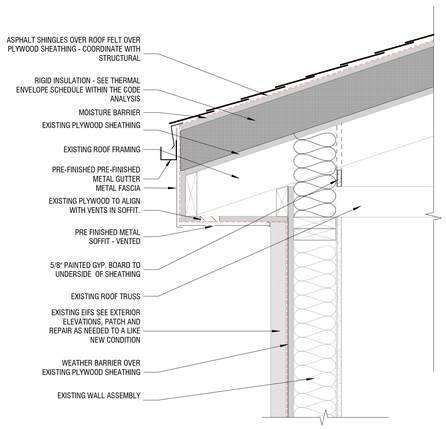

13 ROOF DETAIL AT EXISTNG ROOF
1 1/2" = 1'-0"

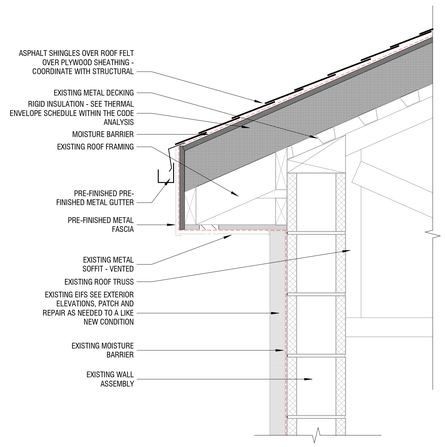

11 ROOF DETAIL AT EXISTNG APPARATUS ROOF
1 1/2" = 1'-0"

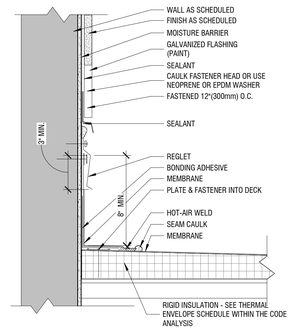

9 REGLET DETAIL @ MECHANICAL WELL
1 1/2" = 1'-0"

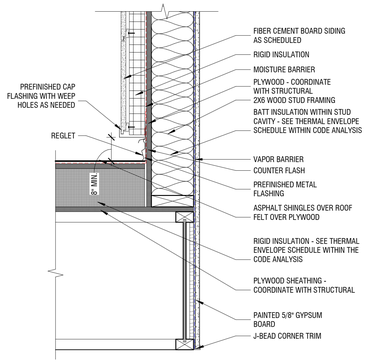

6 ROOF DETAIL
1 1/2" = 1'-0"

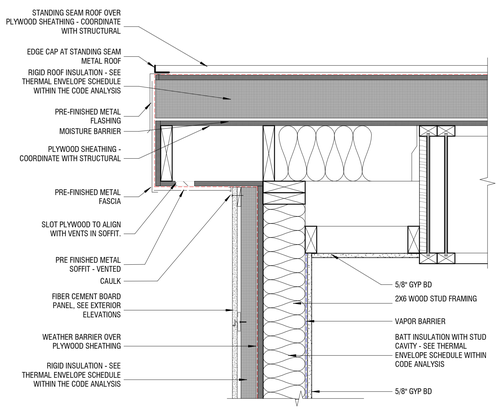

3 SOFFIT DETAIL
1 1/2" = 1'-0"

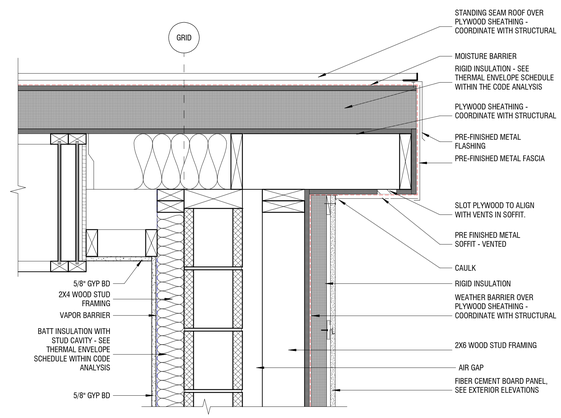

14 SOFFIT DETAIL
1 1/2" = 1'-0"

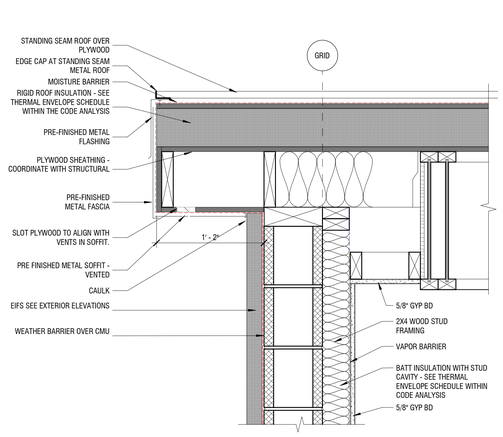

10 SOFFIT DETAIL
1 1/2" = 1'-0"

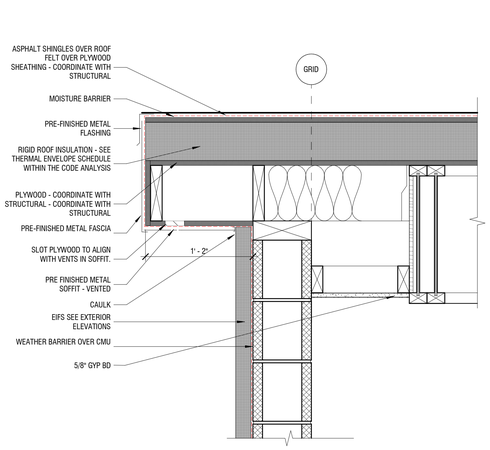

7 SOFFIT DETAIL
1 1/2" = 1'-0"

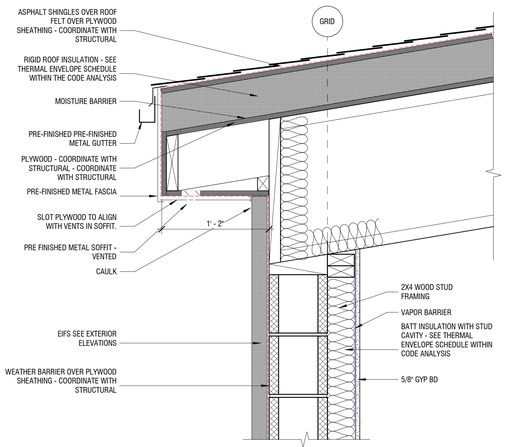

4 SOFFIT DETAIL
1 1/2" = 1'-0"

Babcock Design

Salt Lake City
52 Exchange Place
Salt Lake City, UT 84111
801.531.1144

Boise
800 W Main Street, Suite 940
Boise, ID 83702
208.424.7675

babcock**design**.com

Consultant

CITY OF ALPINE

ALPINE FIRE STATION #202

50 E 100 N ALPINE, UT 84004

Revisions

Num.	Description	Date

Project Number	25116
Original Issue	04.16.2026
Project Status	CONSTRUCTION DOCUMENTS

The information and content represented herein is considered by law the architect's instruments of service and are the property of Babcock Design. They are available for limited review and evaluation by clients, consultants, contractors, government agencies, vendors, and office personnel only in accordance with this agreement. Any other use, including reproduction, distribution, or display for any purpose other than the project including additions to or modification of the contract project. No part thereof may be copied, reproduced, photographed, modified, published, uploaded, transmitted, disclosed, sold, distributed to others in any way including in digital form, or otherwise used without the prior written consent of Babcock Design.

COPYRIGHT © 2025 BABCOCK DESIGN

Stamp

STATE OF UTAH · ROBERT B. COTTLE · 138818 · LICENSED ARCHITECT

Sheet Title

EXTERIOR DETAILS

Sheet Number

A501

Current as of: 4/15/2026 4:21:18 PM

Original drawing is 30" x 42" Autodesk Docs://25116 - ALPINE FIRE STATION 202/25116 - Alpine Fire Station 202.rvt

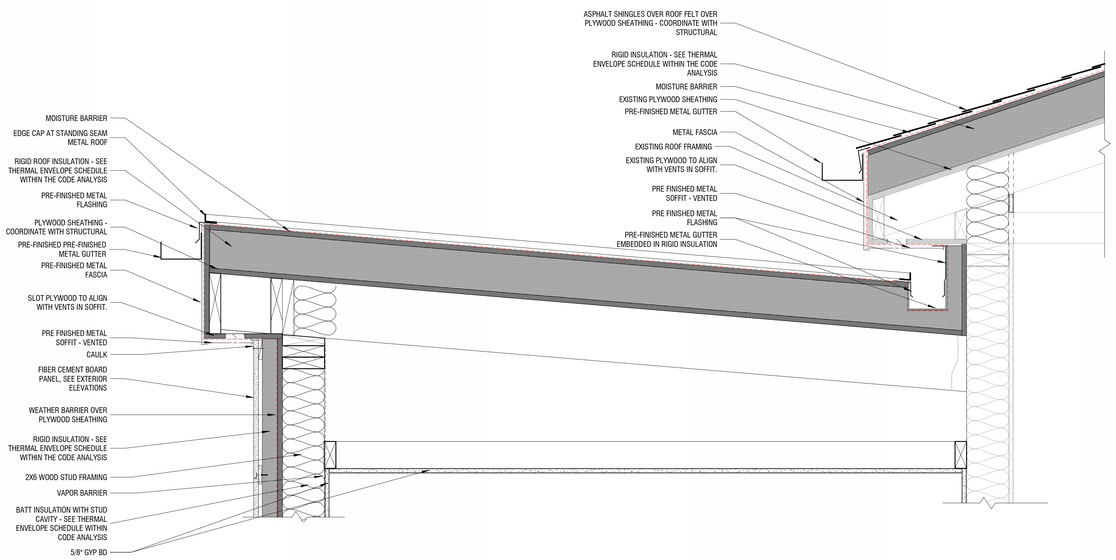

12 VESTIBULE DETAIL
1 1/2" = 1'-0"

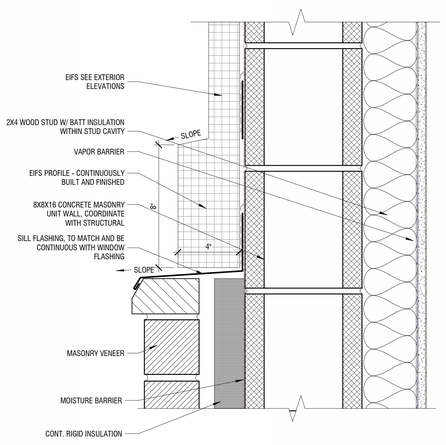

13 TOP OF BRICK VENEER TO EIFS DETAIL
3" = 1'-0"

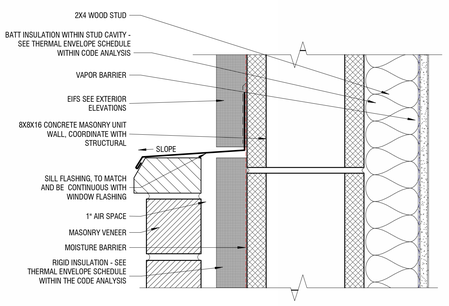

14 BRICK VENEER TO EIFS VERT. TRANSITION
3" = 1'-0"

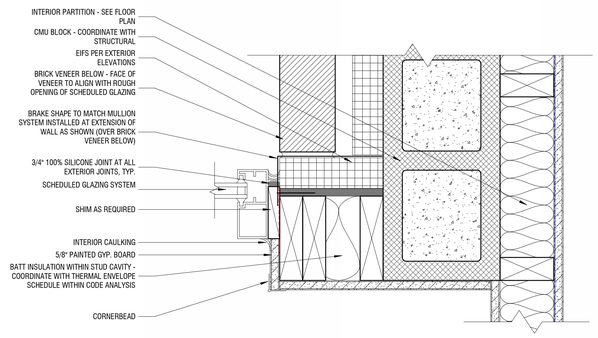

10 EXTR. ALUM. STOREFRONT JAMB
3" = 1'-0"

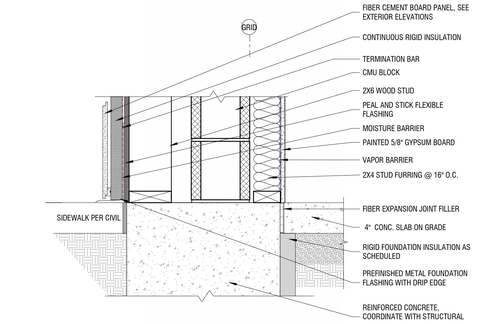

11 FOUNDATION WALL DETAIL @ DBL WALL
1 1/2" = 1'-0"

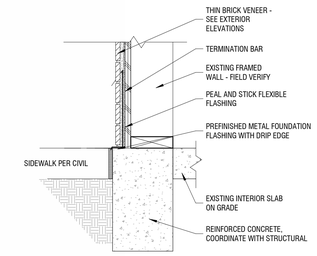

5 FOUNDATION WALL AT THIN BRICK
1 1/2" = 1'-0"

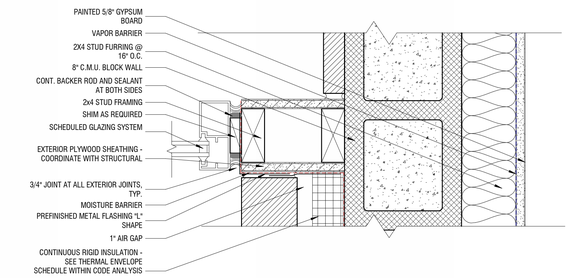

6 EXTR. ALUM. STOREFRONT JAMB @ CMU/PRECAST CAP
3" = 1'-0"

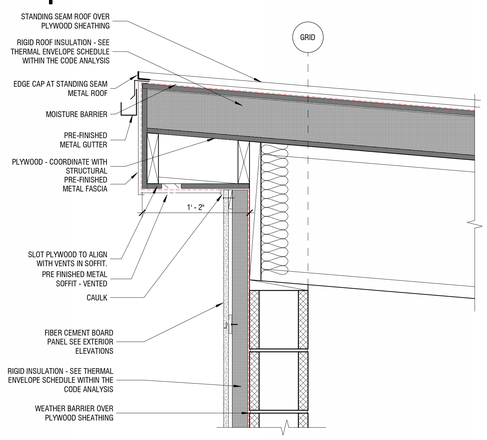

7 SOFFIT DETAIL AT DINING ROOM
1 1/2" = 1'-0"

1 SIGNAGE DETAIL AT NORTH EXTERIOR
1/2" = 1'-0"

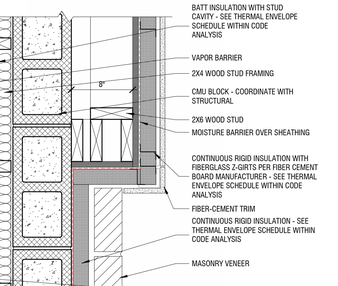

2 FOUNDATION WALL DETAIL @ BRICK
1 1/2" = 1'-0"

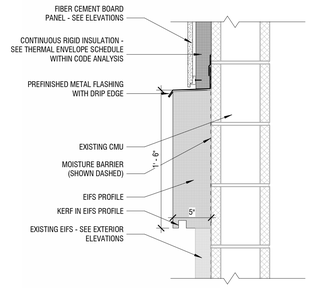

3 EIFS PROFILE
1 1/2" = 1'-0"

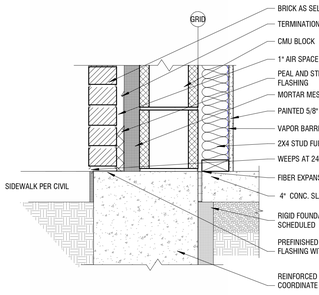

9 FOUNDATION WALL DETAIL @ BRICK
1 1/2" = 1'-0"

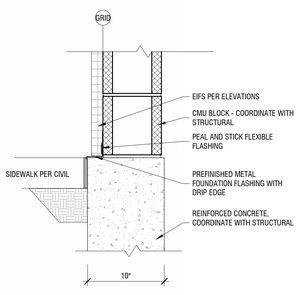

8 FOUNDATION WALL DETAIL @ EIFS
1 1/2" = 1'-0"

4 DOUBLE WALL - OUTDOOR PATIO AREA
1 1/2" = 1'-0"

Babcock Design

Salt Lake City
52 Exchange Place
Salt Lake City, UT 84111
801.531.1144

Boise
800 W Main Street, Suite 940
Boise, ID 83702
208.424.7675

babcock**design**.com

Consultant

CITY OF ALPINE

ALPINE FIRE STATION #202

50 E 100 N ALPINE, UT 84004

Revisions

Num.	Description	Date

Project Number	25116
Original Issue	04.16.2026
Project Status	CONSTRUCTION DOCUMENTS

The information and content represented herein is considered by law the architect's instruments of service and are the property of Babcock Design. They are available for limited review and evaluation by clients, contractors, and public agencies with regulatory authority over the project described herein, subject to this notice. They are intended for use only for the project specified and are to be used for no other purpose on project including additions to or modification of the completed project. No part thereof may be copied, reproduced, photographed, modified, published, uploaded, transmitted, disclosed, sold, distributed to others in any way including in digital form, or otherwise used without the prior written consent of Babcock Design.

COPYRIGHT © 2025 BABCOCK DESIGN

Stamp

STATE OF UTAH · ROBERT B. COFFEY · 136918 · LICENSED ARCHITECT

Sheet Title

EXTERIOR DETAILS

Sheet Number

A502

Current as of: 4/16/2026 9:47:26 PM

Original drawing is 30" x 42" Autodesk Docs://25116 - ALPINE FIRE STATION 202/25116 - Alpine Fire Station 202.rvt

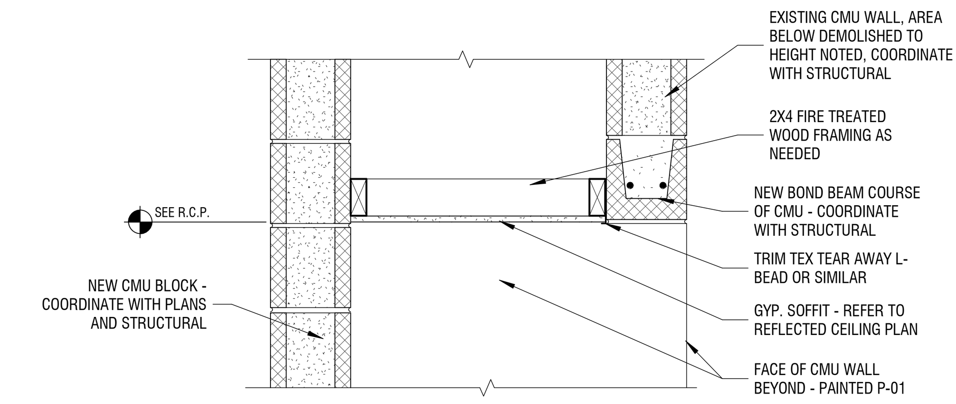

1 GYP. SOFFIT AT EXISTING CMU
1" = 1'-0"

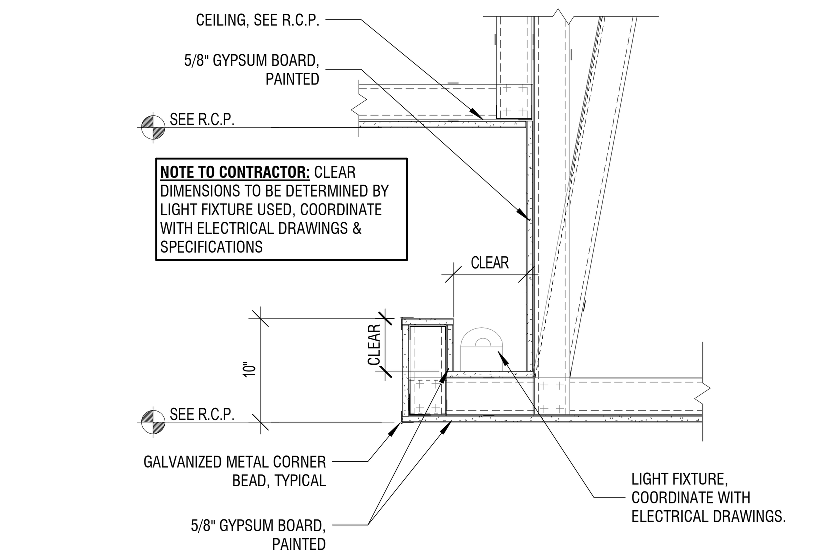

2 LIGHT RECESS AT MAIN LOBBY
1" = 1'-0"

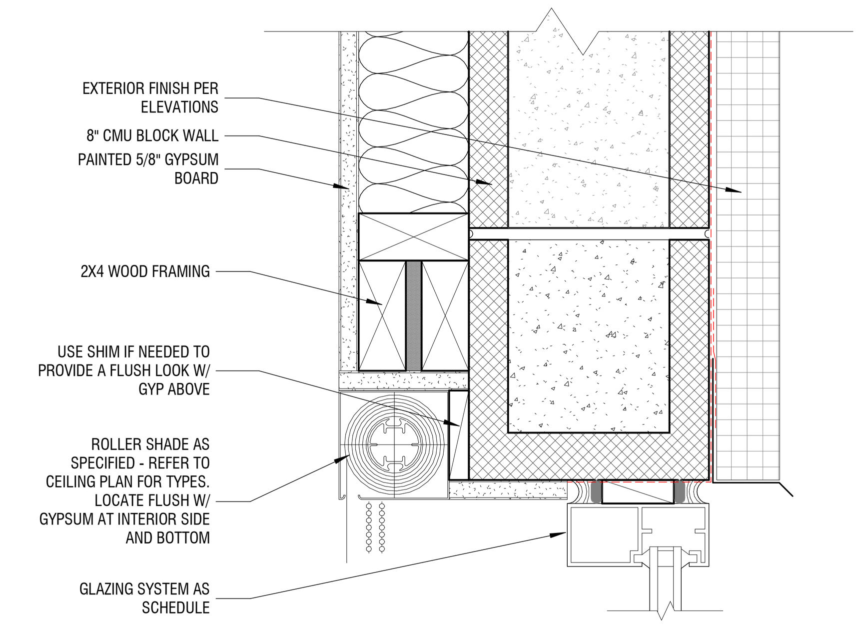

3 ROLLER SHADE DETAIL
3" = 1'-0"

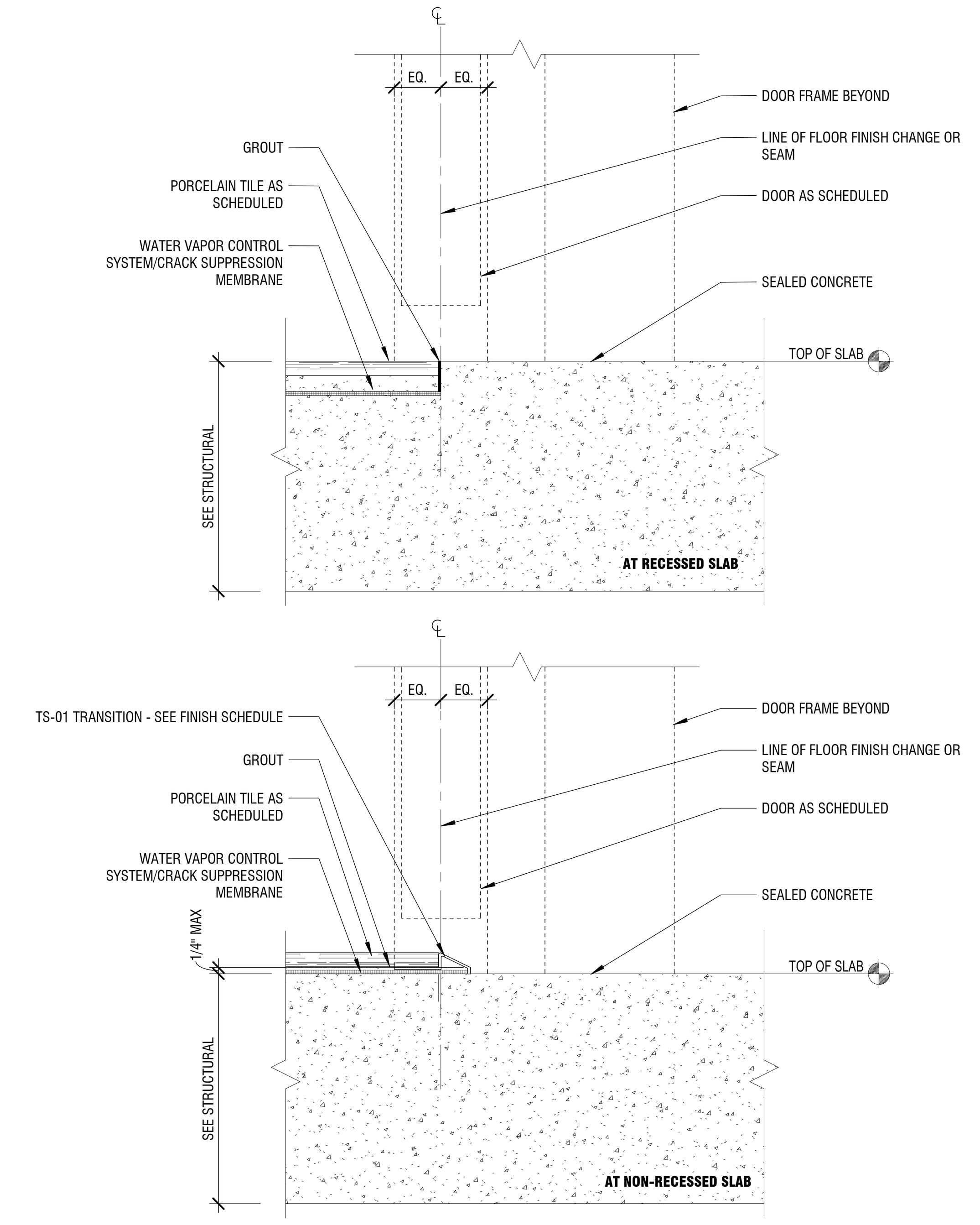

5 TRANSITION - PORCELAIN TILE TO SEALED CONCRETE
6" = 1'-0"

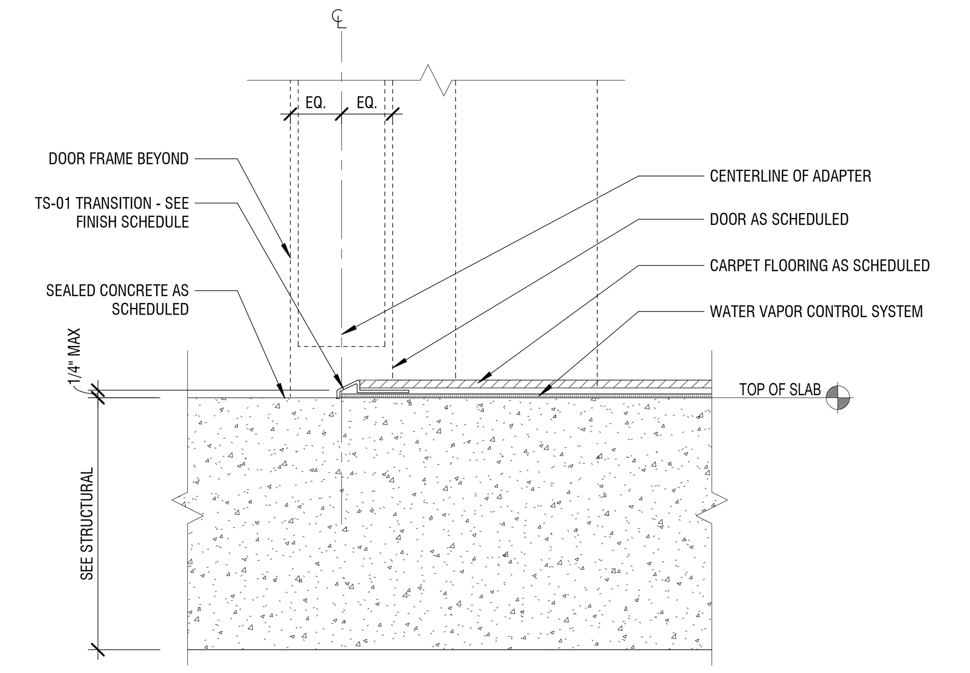

4 TRANSITION - SEALED CONCRETE TO CARPET
6" = 1'-0"

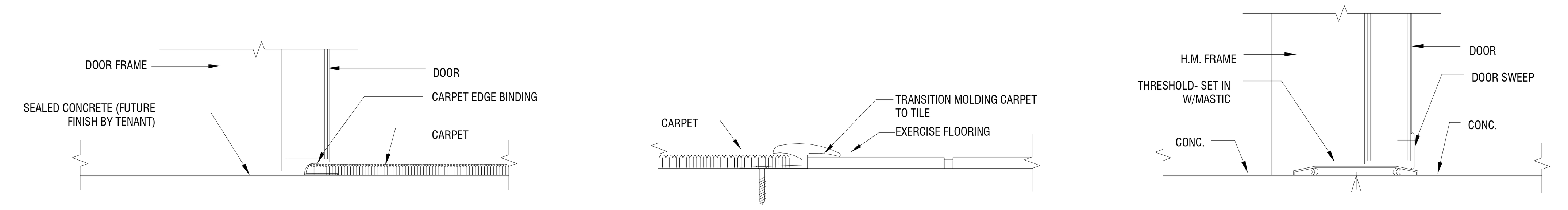

CONCRETE TO CARPET @ DOOR THRESHOLD

CARPET TO EXERCISE FLOORING

CONCRETE TO CONCRETE

6 THRESHOLD DETAILS
3" = 1'-0"

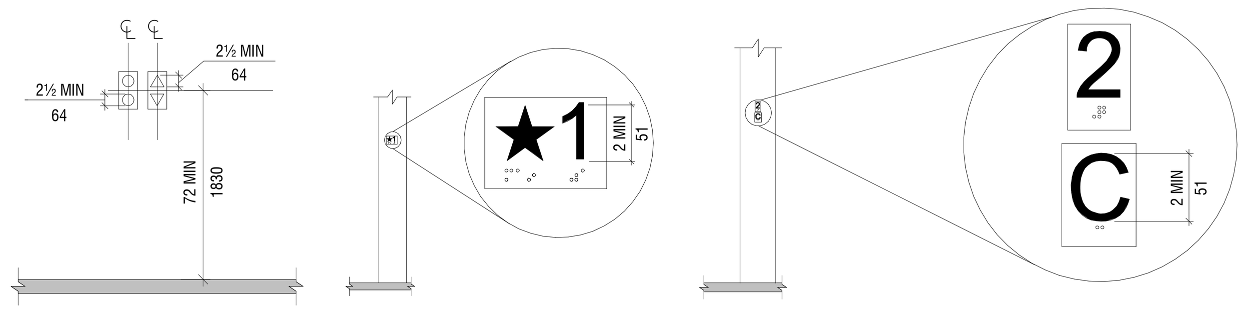

FIGURE 407.2.2.2
VISIBLE HALL SIGNALS
ELEVATOR BUTTONS

FIGURE 407.2.3.1
FLOOR DESIGNATIONS ON JAMBS AT
ELEVATOR HOISTWAY ENTRANCES

FIGURE 407.2.3.2
CAR DESIGNATIONS ON JAMBS OF
DESTINATION-ORIENTED ELEVATOR
HOISTWAY ENTRANCES

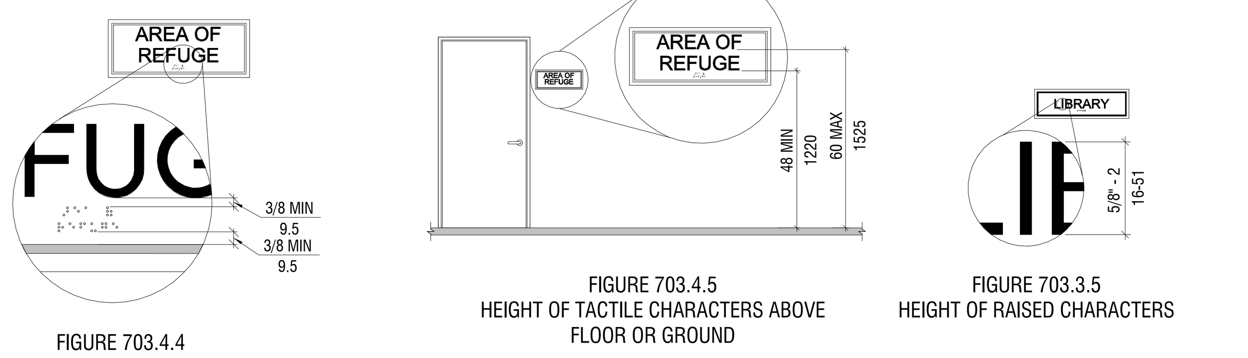

FIGURE 703.4.4
POSITION OF BRAILLE

FIGURE 703.4.5
HEIGHT OF TACTILE CHARACTERS ABOVE
FLOOR OR GROUND

FIGURE 703.3.5
HEIGHT OF RAISED CHARACTERS

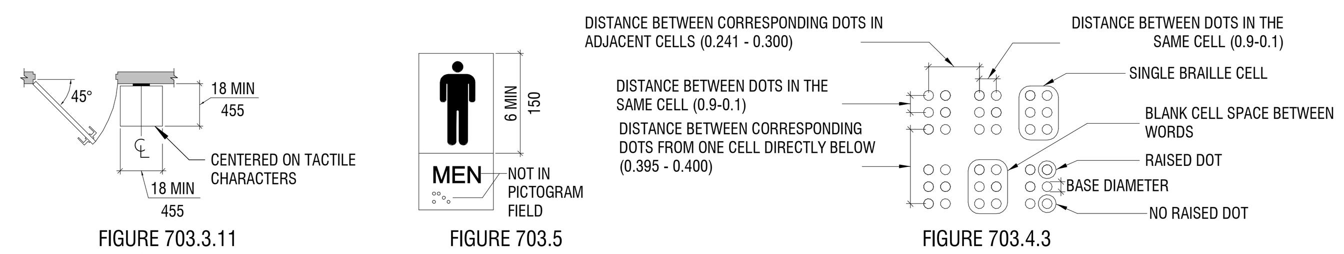

FIGURE 703.3.11
LOCATION OF TACTILE
SIGNS AT DOOR

FIGURE 703.5
PICTOGRAM FIELD

FIGURE 703.4.3
BRAILLE MEASUREMENT

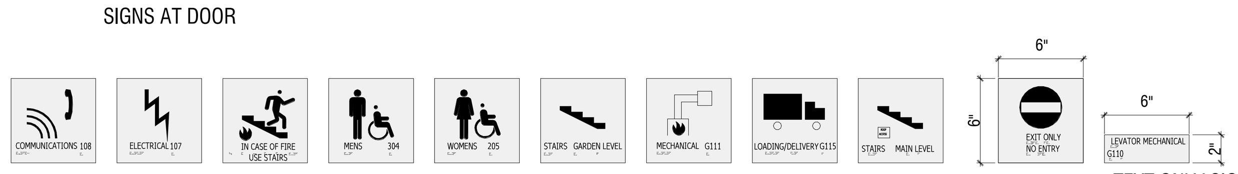

GRAPHICS w/
TEXT SIGN

TEXT ONLY SIGN

NOTE:
ROOM NUMBERS SHOWN ARE FOR REPRESENTATION & LOCATING PURPOSES ONLY.
COORDINATE ROOM NUMBERING WITH OWNER.

9 SIGNAGE
1/4" = 1'-0"

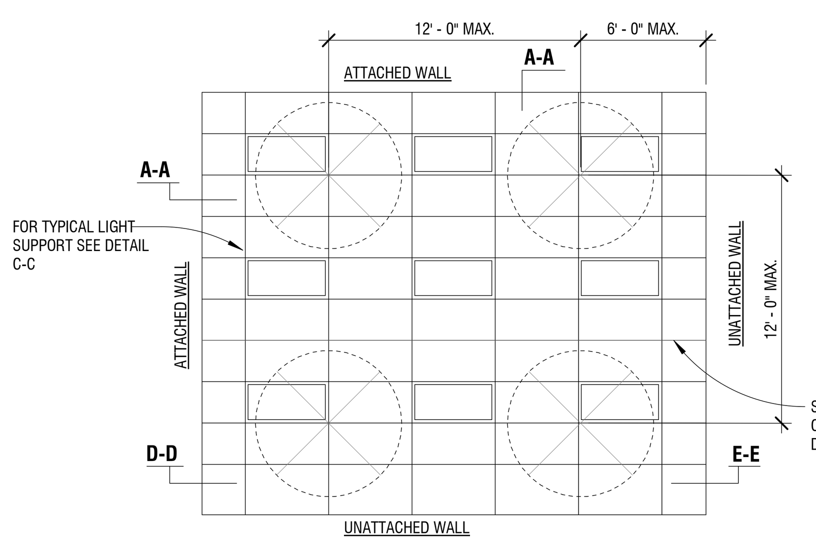

DETAIL GENERAL NOTES

1. USE HEAVY DUTY SUSPENSION SYSTEM.
2. CEILING MUST BE ATTACHED ON TWO ADJACENT WALLS.
3. CEILINGS SUBJECT TO SPECIAL INSPECTION.
4. WITH APPROVAL OF AUTHORITIES HAVING JURISDICTION, INSTALL SUSPENSION SYSTEM AND PANELS IN ACCORDANCE WITH THE IBC SECTION 1621.5 WITH THE FOLLOWING EXCEPTIONS:
5. USE OF BERC2 CLIPS WHICH ELIMINATES THE NEED FOR STABILIZER BARS.
6. 7/8" WALL MOLDING INSTEAD OF THE 2" WALL MOLDING.
7. CEILING AREAS LESS THAN 144 SQ. FT. ARE EXEMPT FROM SEISMIC REQUIREMENTS.

VERIFY INSTALLATION OF CEILING TO BE IN ACCORDANCE WITH THE MANUFACTURER'S RECOMMENDATIONS.

LATERAL FORCE BRACING:
SUSPENDED CEILINGS BRACING SHALL BE AS PER IBC 2506.2.1 AND SECTION 13.5.6 OF ASCE 7 WHERE HORIZONTAL RESTRAINT IS REQUIRED (CEILING SF EXCEEDING 1,000 SF) HORIZONTAL RESTRAINT SHALL BE AFFECTED BY FOUR NO. 12 GAUGE WIRES SECURED TO THE MAIN RUNNER WITHIN 2" OF THE CROSS RUNNER INTERSECTION AND SPLAYED 90* FROM EACH OTHER AT AN ANGLE NOT EXCEEDING 45* FROM THE PLANE OF THE CEILING. THESE HORIZONTAL RESTRAINT POINTS SHALL BE PLACED 12'-0" O.C. MAX. IN BOTH DIRECTIONS W/ THE FIRST POINT WITHIN 8'-0" FROM EACH WALL AT ONE CORNER OF THE ROOM AND NOT TO EXCEED 8'-0" MAX. FROM ANY WALL AT THE PERIMETER OF APPLICATION, ATTACHMENT OF ALL RESTRAINT WIRES SHALL BE AS PER CISCA STANDARDS AND SHALL BE ADEQUATE FOR THE LOAD IMPOSED, 400LBS. MINIMUM. (SEE ABOVE GENERAL NOTE)

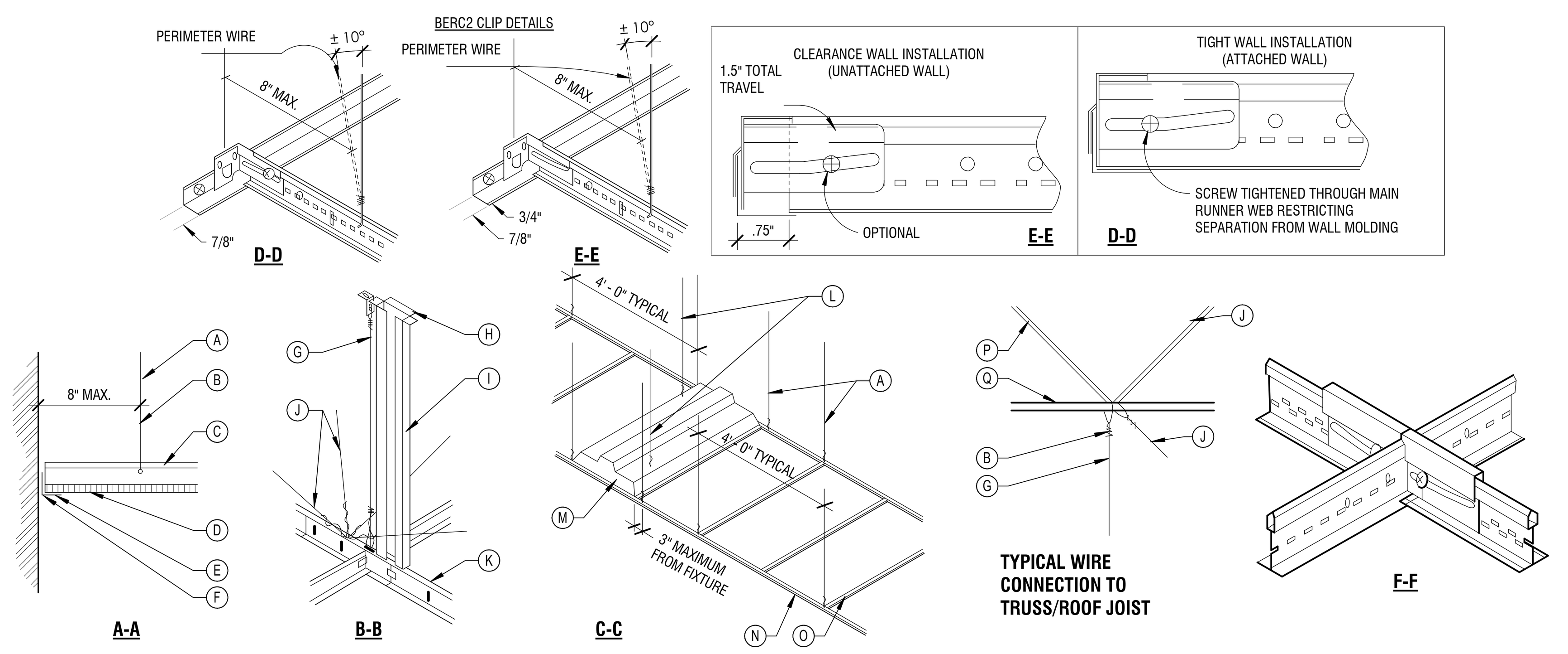

DETAIL KEY NOTES

- (A) 12 GA. HANGER WIRE (EVERY 16 SQ. FT. MIN.)
- (B) 3 TURNS MIN. (1-1/2" RUN)
- (C) MAIN RUNNER OR CROSS TEE AS SCHEDULED
- (D) CEILING AS SCHEDULED
- (E) WALL ANGLE
- (F) WALL CONNECTION, ANCHOR TO STRUCTURAL ELEMENT
- (G) ACOUSTICAL CEILING SUSPENSION WIRE (TEST FOR 400 LBS.)
- (H) FASTEN TO DECK
- (I) 2" x18 GA. STEEL STUD (OR ACCEPTED ALTERNATE) SCREW ATTACHED TO MAIN TEE AND TO STRUCTURE ABOVE AT EACH SEISMIC RESTRAINT LOCATION
- (J) 12 GA. SPLAYED SEISMIC BRACING WIRES (45° OFF OF HORIZ., EVERY 144 SQ. FT. MIN.) SECURED TO STRUCTURE PER CISCA STANDARDS, DO NOT INSTALL PERPENDICULAR TO JOISTS
- (K) MAIN TEE
- (L) SLACK WIRES
- (M) LIGHT FIXTURE AS SELECTED
- (N) HEAVY DUTY MAIN 3" MAX. RUNNER
- (O) CROSS TEE
- (P) JOIST WEB MEMBERS
- (Q) BOTTOM JOIST CHORD

10 TYPICAL LAY-IN CEILING DETAILS
12" = 1'-0"

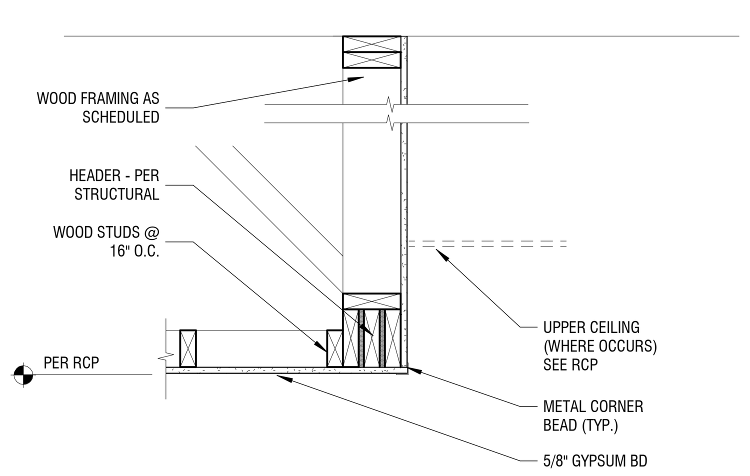

11 GYP. BOARD SOFFIT FASCIA
1" = 1'-0"

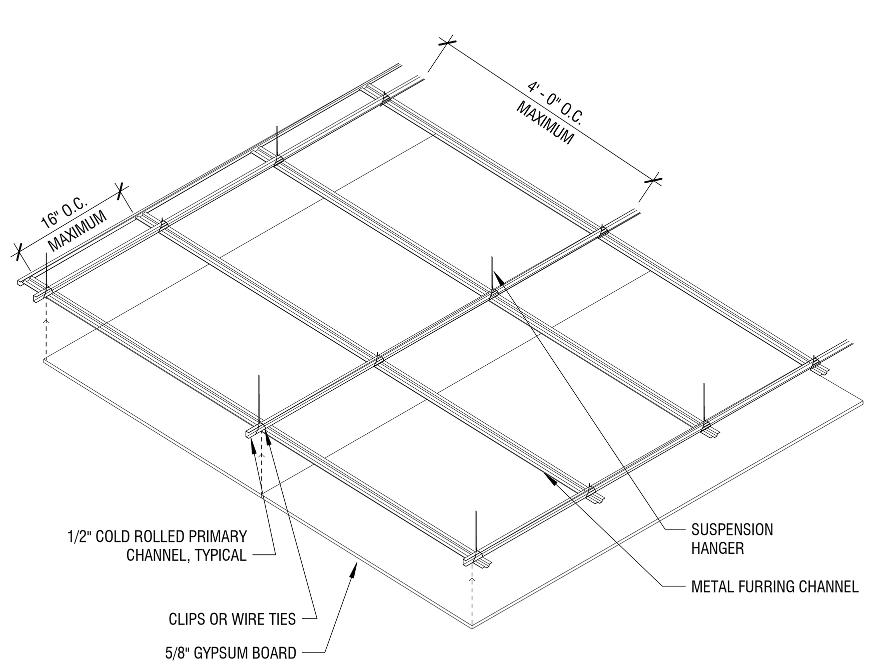

8 SUSPENDED GYPSUM BOARD
N.T.S.

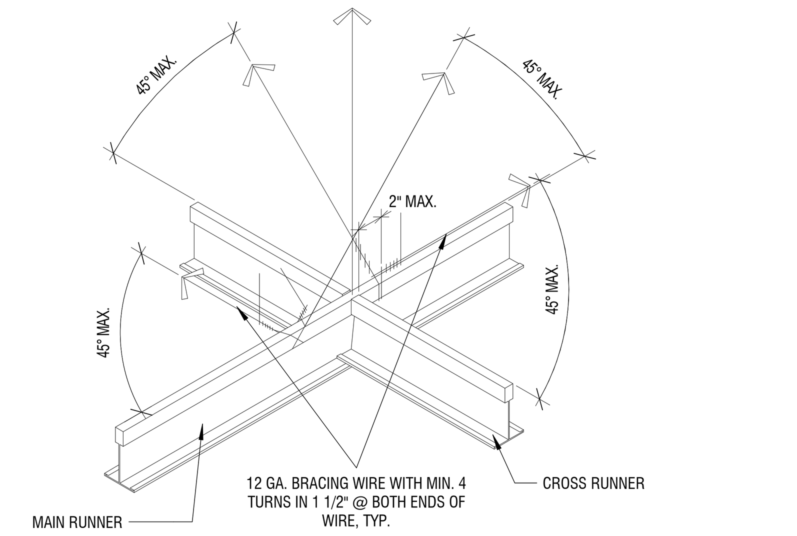

GENERAL NOTE:
ACOUSTICAL SUSPENDED CEILINGS TO ALSO BE INSTALLED PER MANUFACTURER'S RECOMMENDATIONS, IBC 2015, AND ASTM C 635 AND ASTM C 636.

Suspended Ceiling Seismic Provisions from CISCA 0-2 for Design Class C

1. Each individual fixture and attachments with a combined weight of 56 lbs. or less shall have two No. 12 gauge wire hangers attached at diagonal corners of the fixture. These wires must be slack. Any fixtures and attachments with a combined weight greater that 56 lbs. must be independently supported from the structure.
2. The main runner/cross runner intersections and all grid splices must have an average ultimate test strength of 60 lbs. or more in both tension and compression. The tensile test must allow for a 5° offset of the connection in any direction.
3. The actual average weight of the ceiling system, including grid, panels or tile, light fixtures, and air terminals must be 2.5 psf or less. All other services must be supported independently from the ceiling system. For ceilings that have an average weight greater than 2.5 psf, the ceiling may be installed as specified in CISCA Zone 3-4 provisions, taking into account the design lateral force factor appropriate for Zone 2. Other deviations or variations must be substantiated by verifiable engineering data.
4. The ceiling system cannot be used to provide lateral support for walls or partitions. Walls or partitions may be attached to the ceiling grid provided they allow the ceiling membrane to move laterally to accommodate the required clearance as specified below.
5. All perimeter closure angles or channels must provide a support ledge of approximately 7/8 in. or greater. A terminal end of a grid member (or tile) must rest on the ledger or molding with at least 3/8 in. clearance from an edge or wall.
6. For perimeter closure angles that provide a support ledge of less than noted above, the terminal ends of each cross runner or main runner shall be independently supported within 8 in. from each wall or ceiling discontinuity. This support may be a No. 12 gauge hanger wire or other support that prevents the grid from falling. This wire does not need to be vertical but should not have a slope greater than 1 in 6 out- of-plumb. A 3/8 in. grid end clearance from a wall should be maintained.
7. All ceiling penetrations (columns, sprinklers, etc.) and independently supported fixtures or services are to be considered as perimeter closures that also must allow the noted clearances by using suitable escutcheons or closure details.
8. At wall closure ledges, the cross runner and main runner ends shall be prevented from spreading apart from each other. Permanent attachments (i.e. pop rivets) for grid alignment purposed shall not be permitted.

7 SUSPENDED CEILING SUPPORT STRUCTURE DETAIL
3" = 1'-0"

Babcock Design

Salt Lake City
52 Exchange Place
Salt Lake City, UT 84111
801.531.1144

Boise
800 W Main Street, Suite 940
Boise, ID 83702
208.424.7675

babcockdesign.com

Consultant

CITY OF ALPINE

ALPINE FIRE STATION #202

50 E 100 N ALPINE, UT 84004

Revisions

Num.	Description	Date

Project Number	25116
Original Issue	04.16.2026
Project Status	CONSTRUCTION DOCUMENTS

The information and content represented herein is considered by law the architect's instruments of service and are the property of Babcock Design. They are available for limited review and evaluation by clients, consultants, contractors, government agencies, vendors, and office personnel only in accordance with this notice. They are intended for use only for the project specified and are to be used for no other purpose or project including additions to or modification of the completed project. No part thereof may be copied, reproduced, photographed, modified, published, uploaded, transmitted, disclosed, sold, distributed to others in any way including in digital form, or otherwise used without the prior written consent of Babcock Design.

COPYRIGHT © 2025 BABCOCK DESIGN

Stamp

Sheet Title

INTERIOR DETAILS

Sheet Number

A541

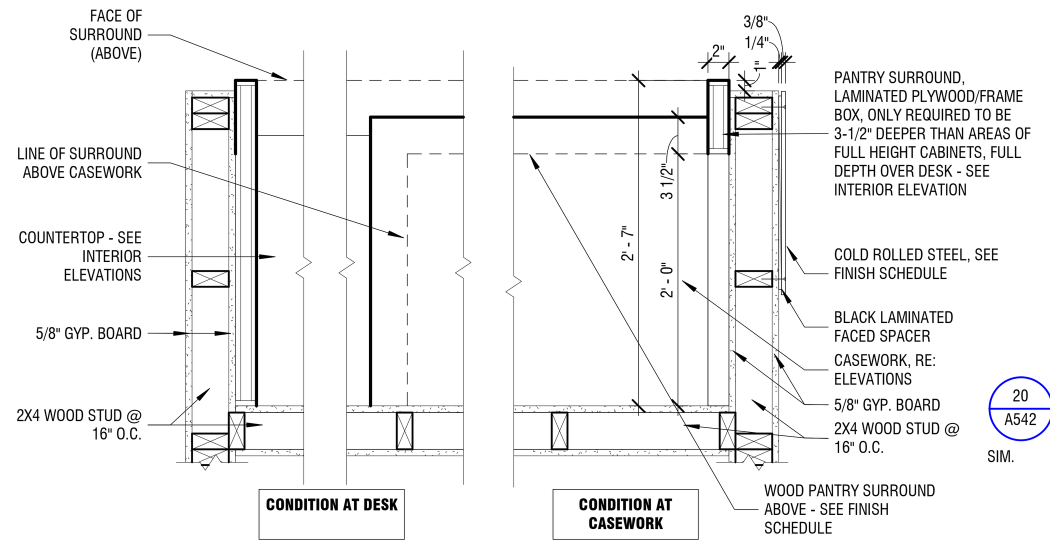

17 PANTRY SURROUND PLAN DETAIL
1" = 1'-0"

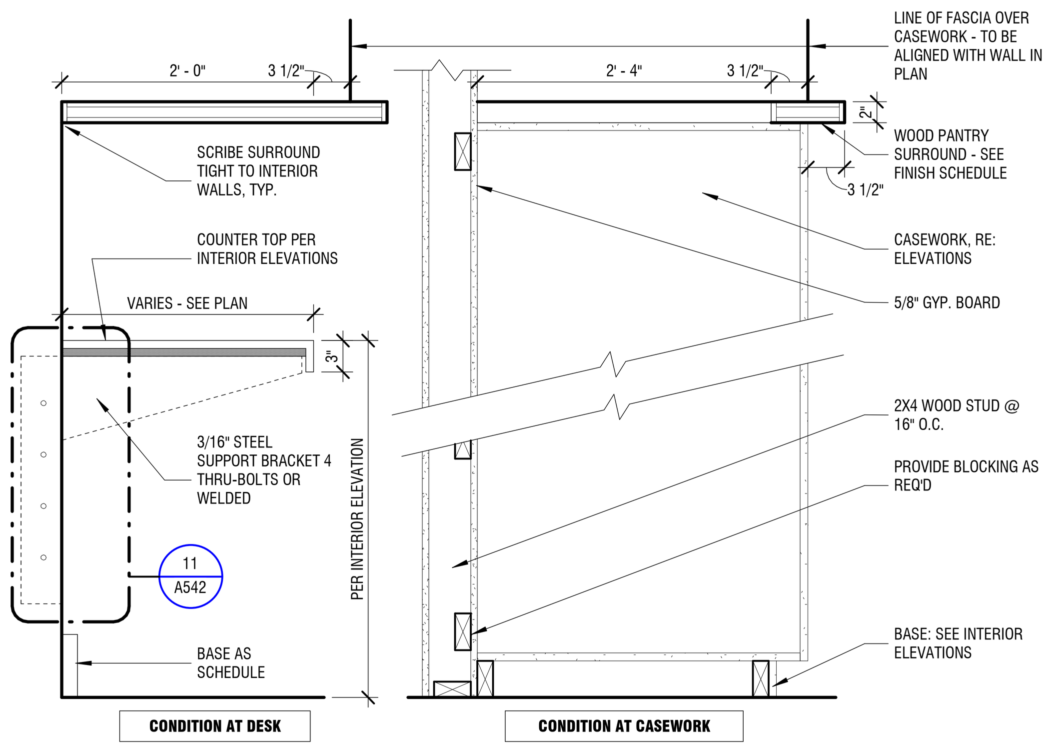

18 SECTION AT PANTRY SURROUND
1" = 1'-0"

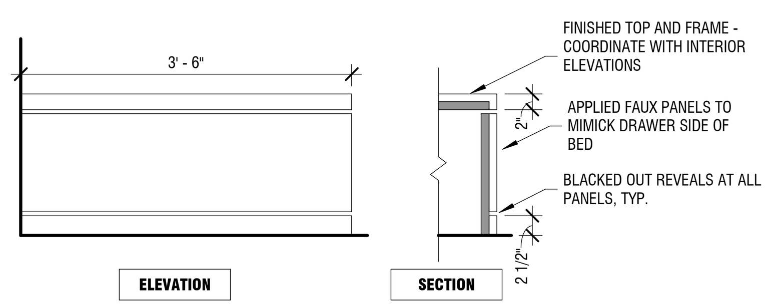

NOTE:
DIMENSIONS SHOWN ASSUME A 39" X 80" TWIN XL MATTRESS. CONTRACTOR TO COORDINATE FINAL OWNER PROVIDED MATTRESS DIMENSIONS TO ENSURE COMPATIBILITY

19 SECTION AT END OF BED
3/4" = 1'-0"

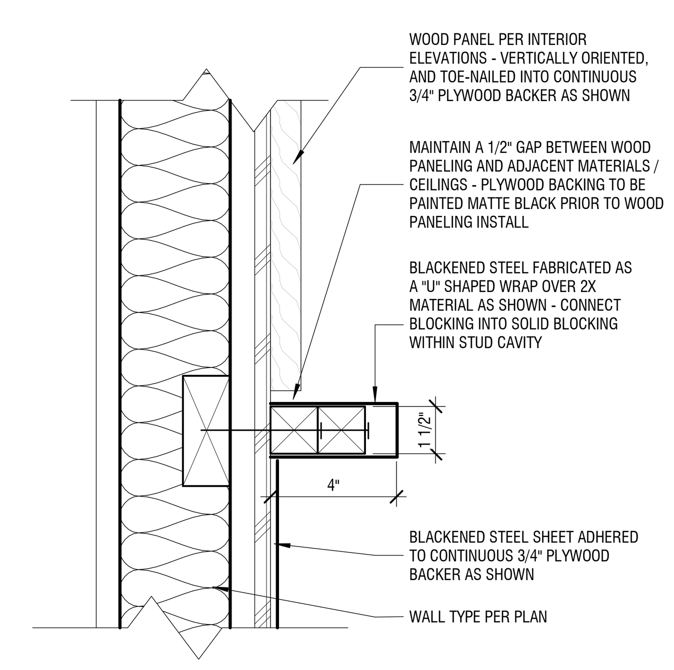

20 ENLARGED DETAIL AT DAYROOM SURROUND
3" = 1'-0"

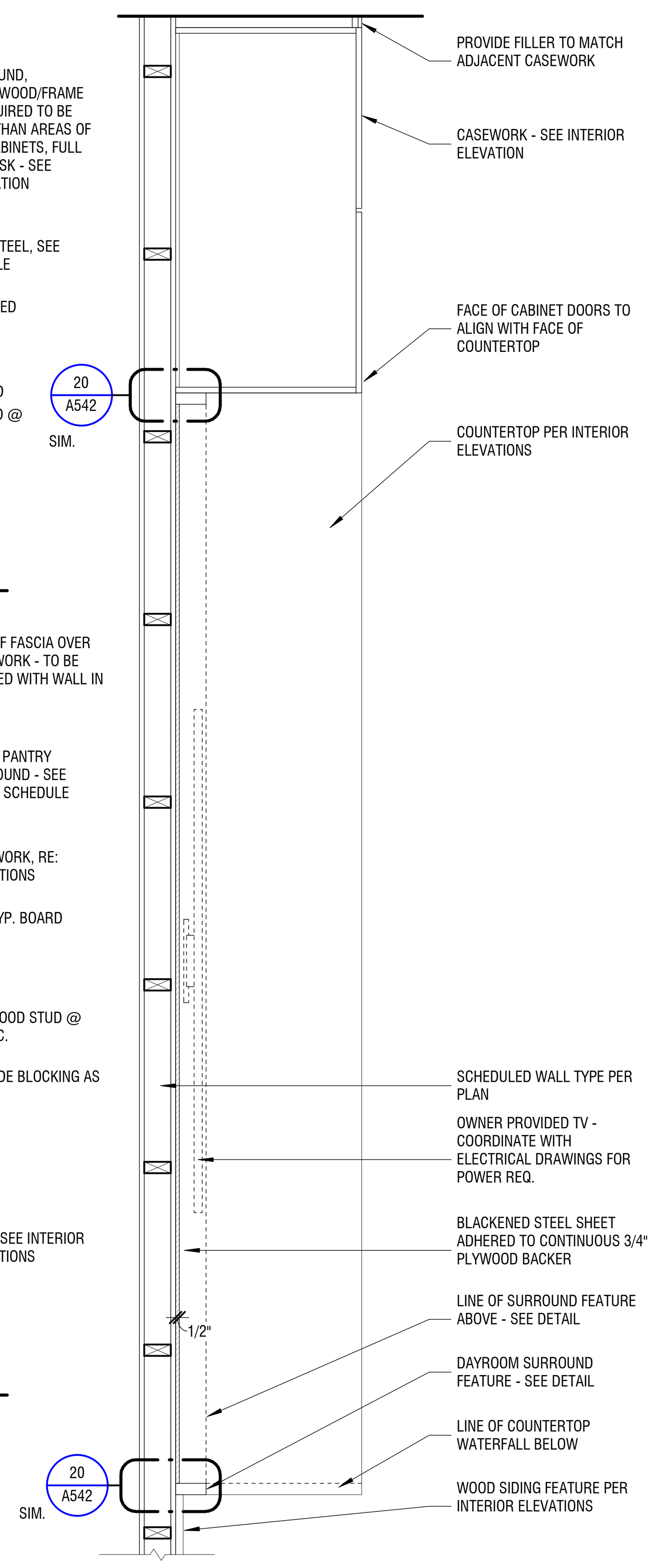

14 PLAN DETAIL AT DAYOOM TV FEATURE WALL
3/4" = 1'-0"

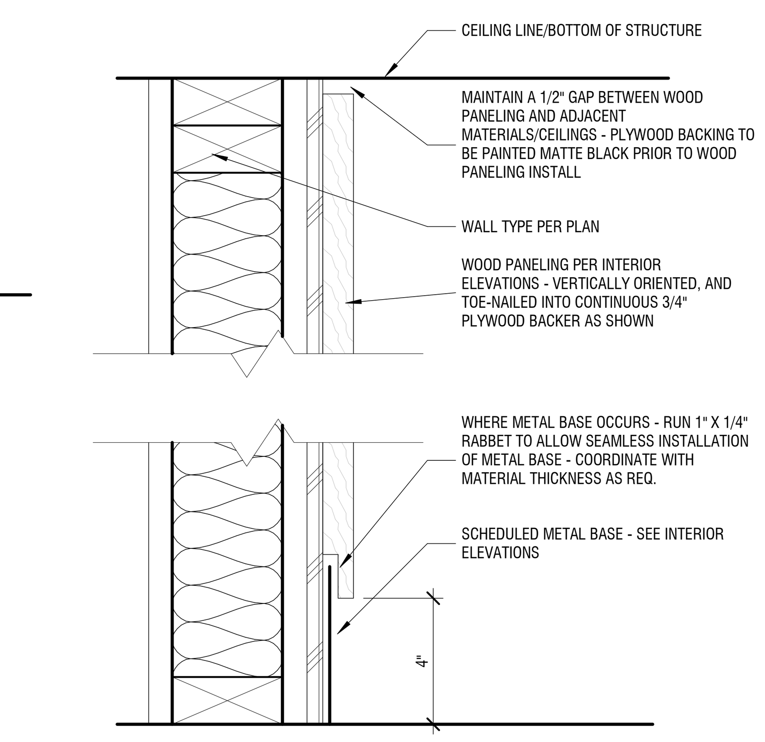

15 WOOD PANEL DETAIL AT T.O. WALL AND B.O. WALL
3" = 1'-0"

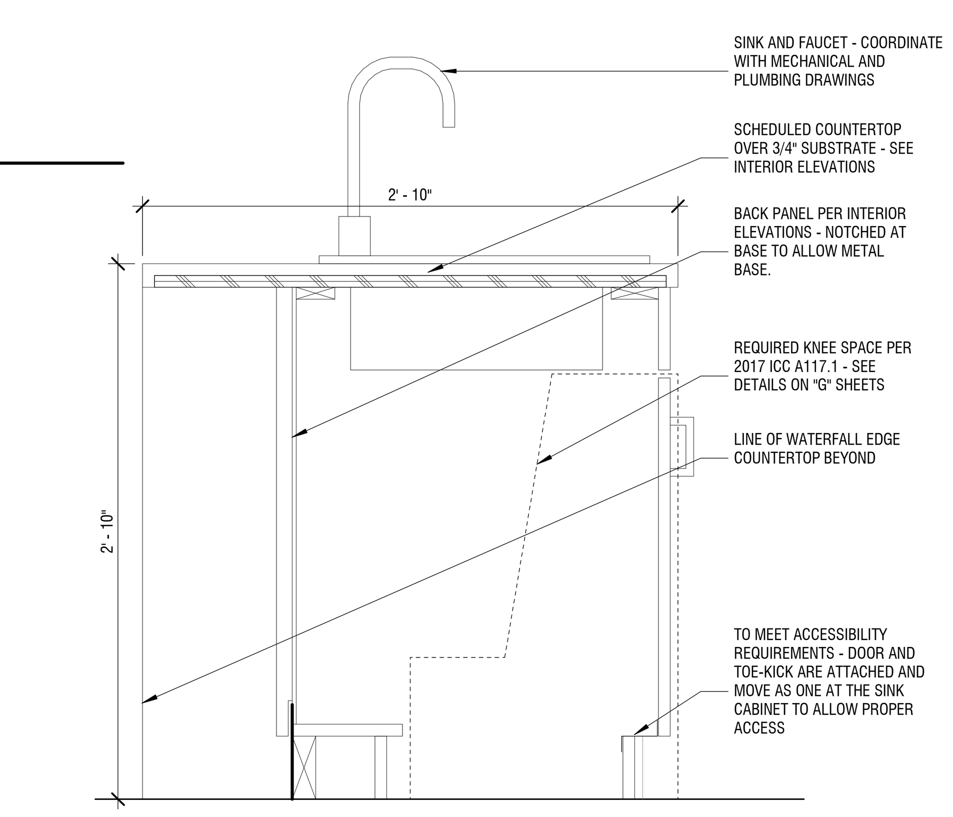

16 SECTION THRU KITCHEN ISLAND
1 1/2" = 1'-0"

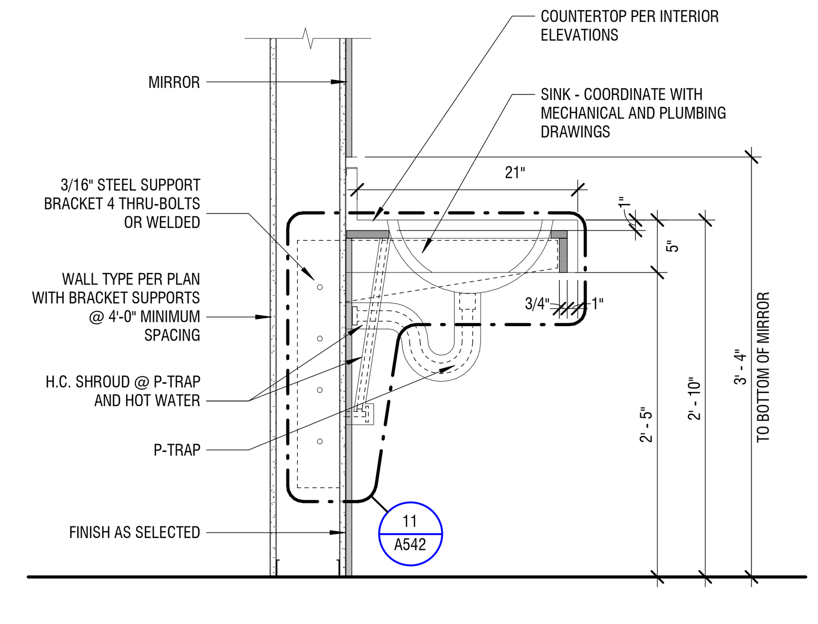

10 RESTROOM VANITY DETAIL
1" = 1'-0"

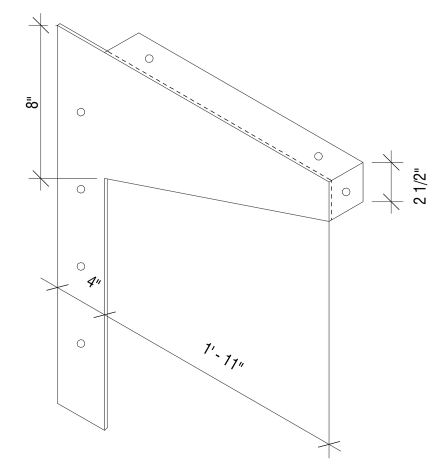

11 COUNTERTOP SUPPORT BRACKET
1 1/2" = 1'-0"

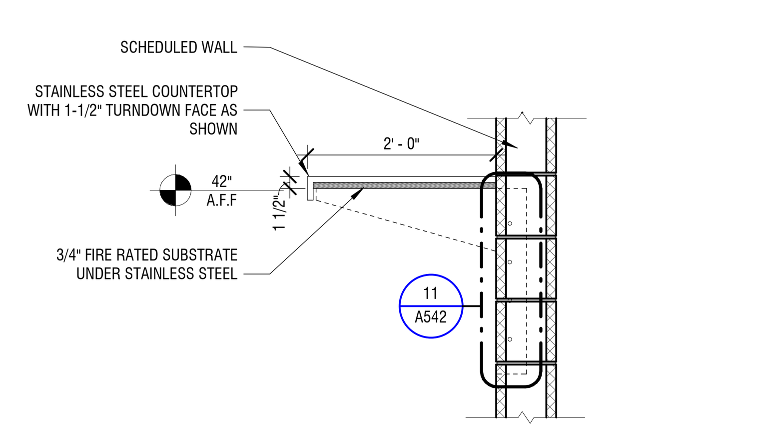

12 STAINLESS STEEL COUNTERTOP AND SUPPORT
3/4" = 1'-0"

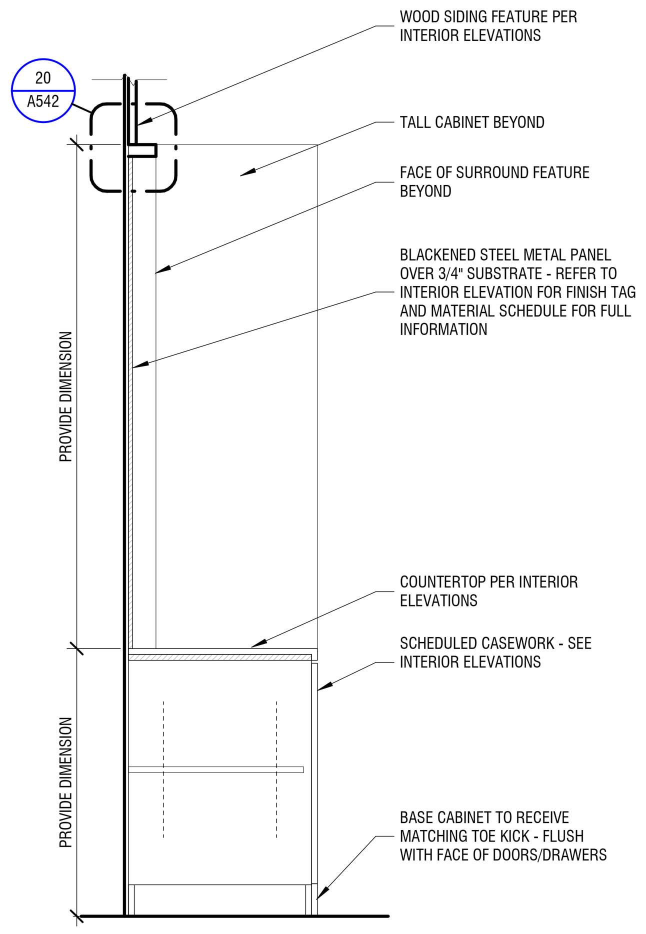

13 SECTION DETAIL AT DAYROOM TV FEATURE WALL
3/4" = 1'-0"

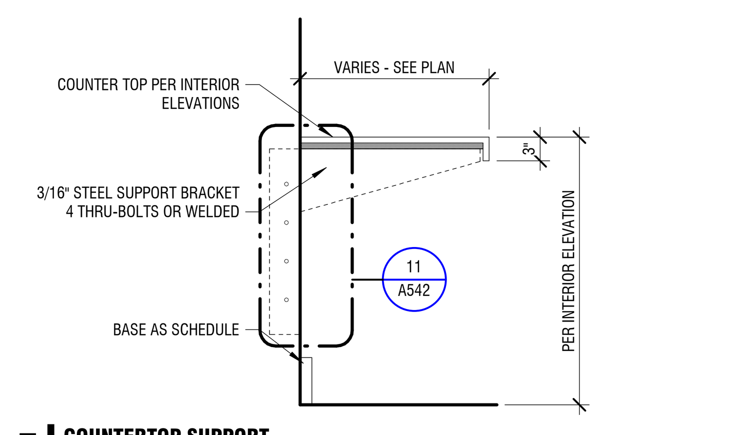

5 COUNTERTOP SUPPORT
3/4" = 1'-0"

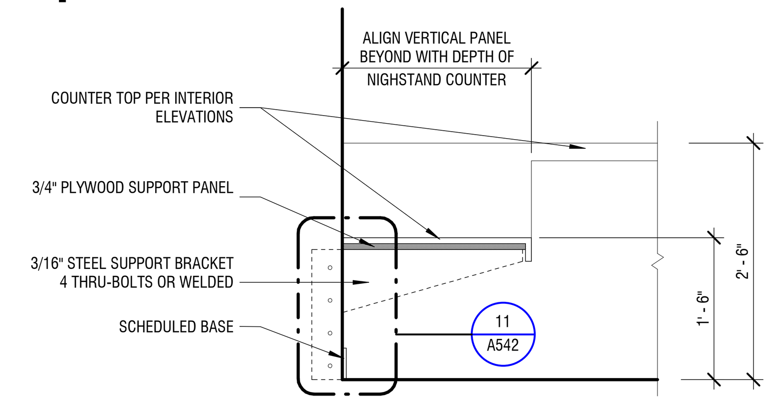

6 SECTION THRU NIGHTSTAND
3/4" = 1'-0"

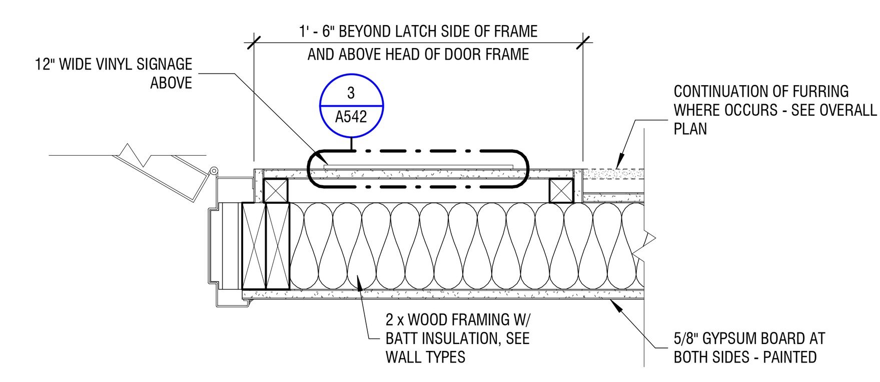

7 PLAN DETAIL AT DORM SIGNAGE DETAIL
1 1/2" = 1'-0"

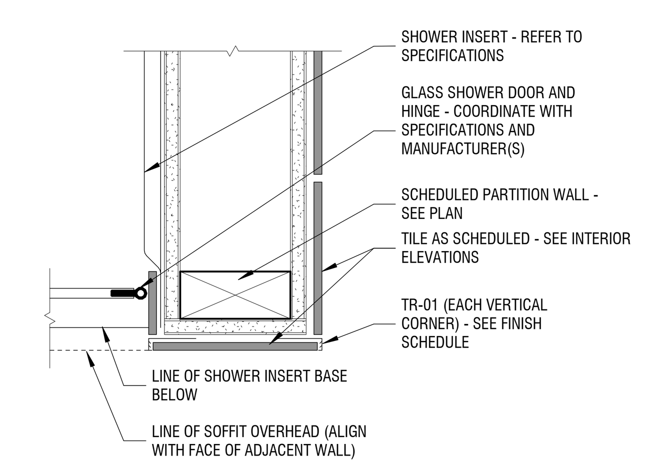

8 PLAN DETAIL AT SHOWER INSERT TO TILE/WALL FINISH
3" = 1'-0"

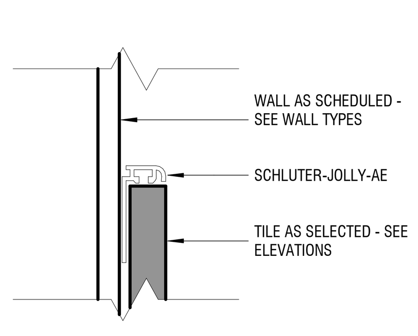

9 TOP OF TILE WAINSCOT
12" = 1'-0"

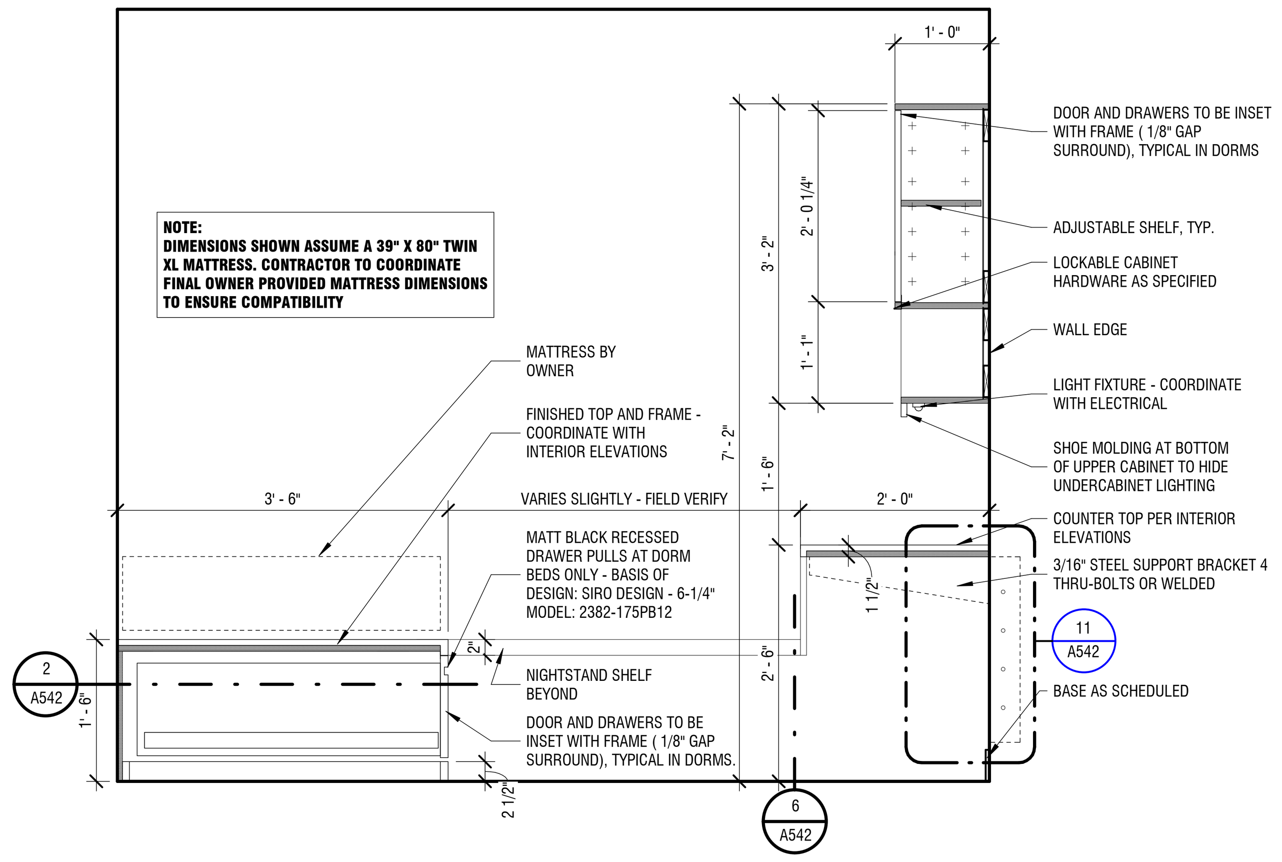

1 SECTION AT BUILT IN DORM BED/STORAGE THRU NIGHTSTAND AND DESK
3/4" = 1'-0"

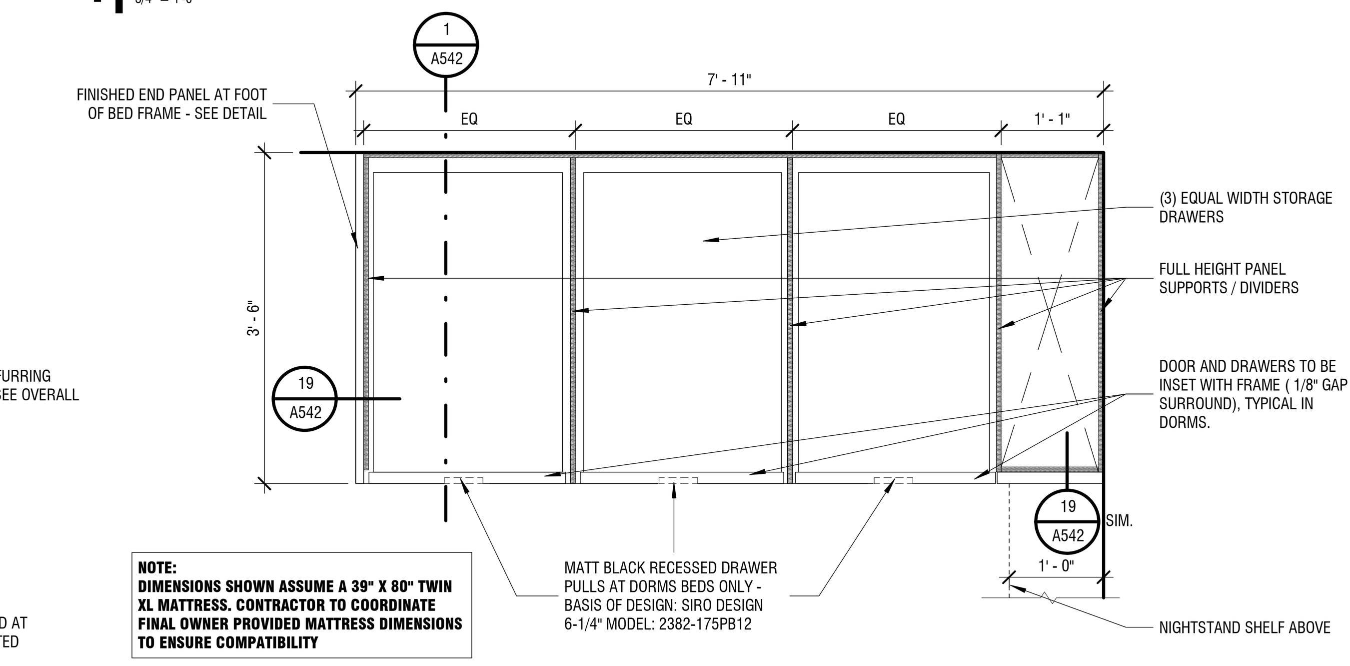

2 PLAN DETAIL AT BUILT IN DORM BED/STORAGE
3/4" = 1'-0"

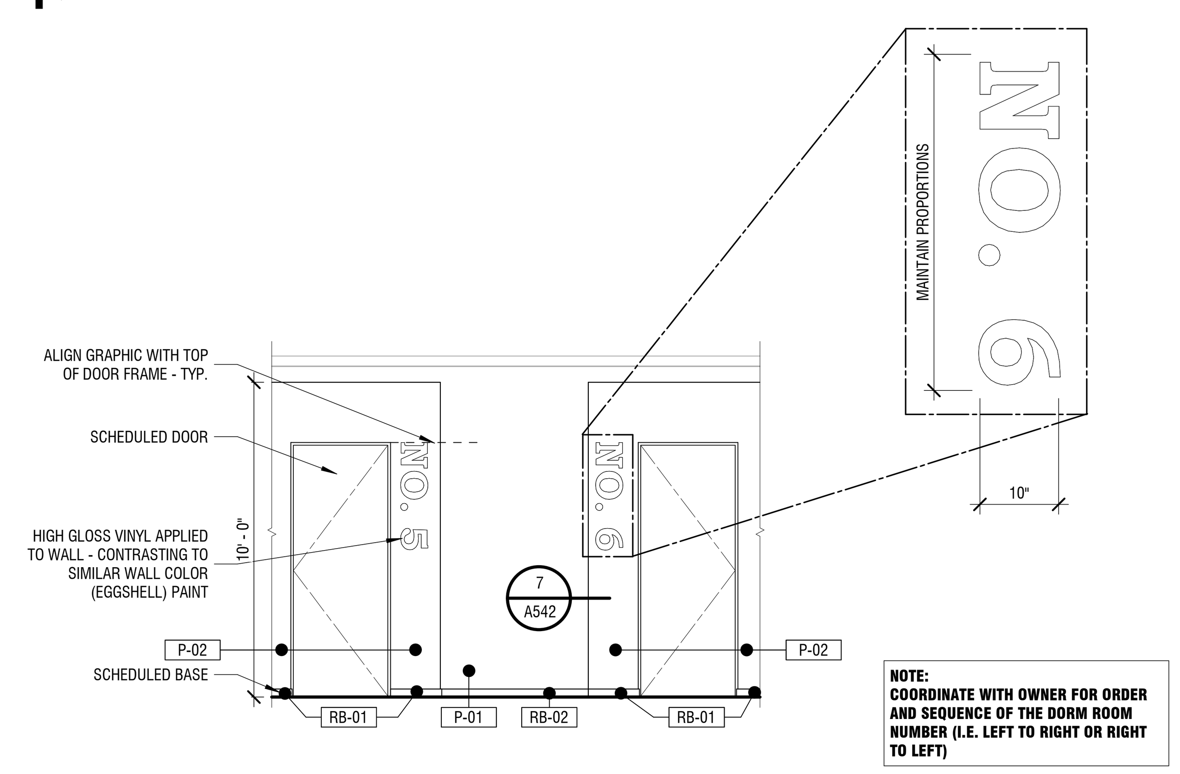

3 DORM SIGNAGE DETAIL - TYP. OF ALL 6 DORMS
1/4" = 1'-0"

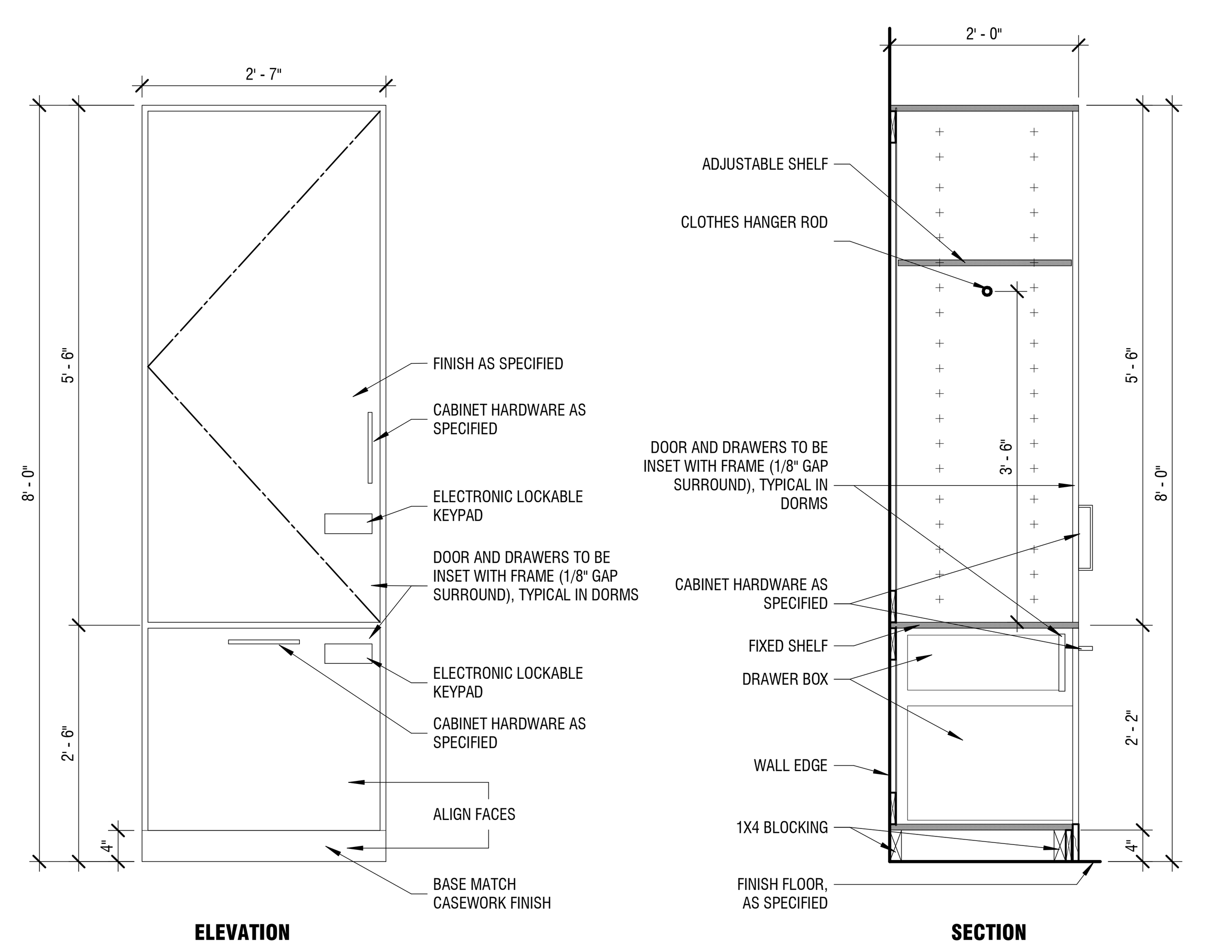

4 THREE COMPARTMENT LOCKABLE WARDROBE
3/4" = 1'-0"

Babcock Design

Salt Lake City
52 Exchange Place
Salt Lake City, UT 84111
801.531.1144

Boise
800 W Main Street, Suite 940
Boise, ID 83702
208.424.7675

babcockdesign.com

Consultant

CITY OF ALPINE

ALPINE FIRE STATION #202

50 E 100 N ALPINE, UT 84004

Revisions

Num.	Description	Date

Project Number	25116
Original Issue	04.16.2026
Project Status	CONSTRUCTION DOCUMENTS

The information and content represented herein is considered by law the architect's instruments of service and are the property of Babcock Design. They are available for limited review and evaluation by clients, consultants, contractors, government agencies, vendors, and office personnel only in accordance with this notice. They are intended for use only for the project specified and are to be used for no other purpose or project including additions to or modification of the completed project. No part thereof may be copied, reproduced, photographed, modified, published, uploaded, transmitted, disclosed, sold, distributed to others in any way including in digital form, or otherwise used without the prior written consent of Babcock Design.

COPYRIGHT © 2025 BABCOCK DESIGN

Stamp

STATE OF UTAH
ROBERT B. COTTLE
136818
LICENSED ARCHITECT

Sheet Title

INTERIOR DETAILS

Sheet Number

A542

Current as of: 4/16/2026 9:47:39 PM

Original drawing is 30" x 42" Autodesk Docs://25116 - ALPINE FIRE STATION 202/25116 - Alpine Fire Station 202.rvt

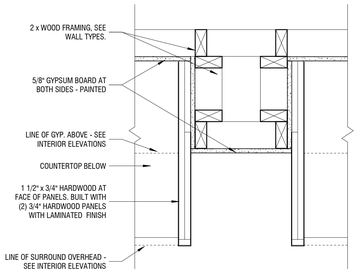

8 PLAN DETAIL AT MILLWORK IN COMMUNITY ROOM
1 1/2" = 1'-0"

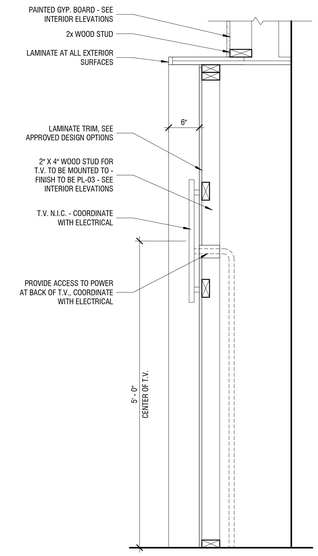

9 SECTION THRU T.V. MILLWORK IN COMMUNITY ROOM
1" = 1'-0"

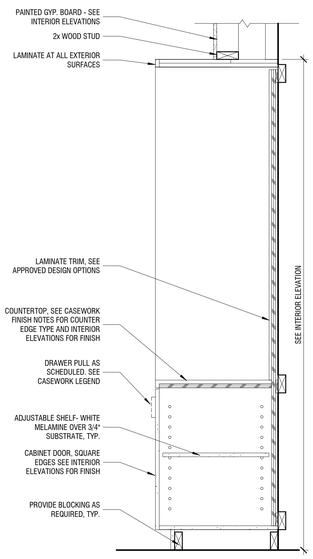

10 SECTION THRU MILLWORK IN COMMUNITY ROOM
1" = 1'-0"

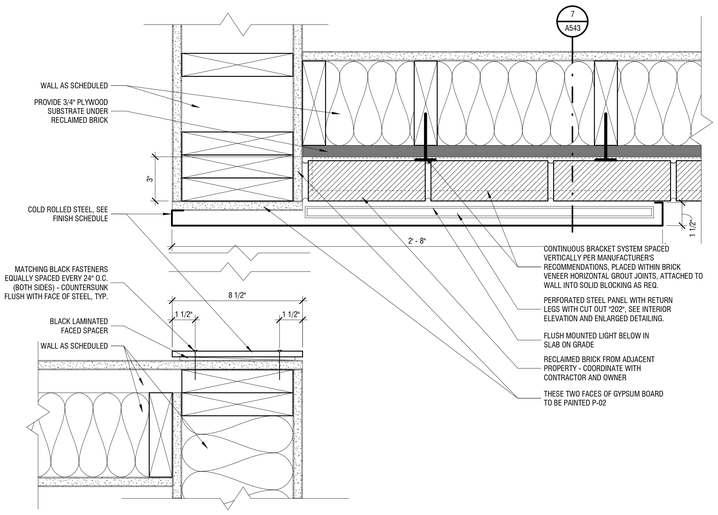

5 PLAN DETAIL AT INTERIOR ENTRY SIGN
3" = 1'-0"

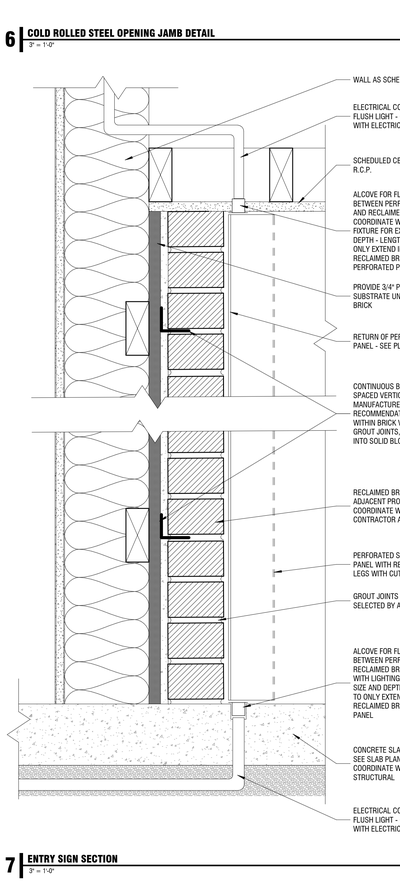

7 ENTRY SIGN SECTION
3" = 1'-0"

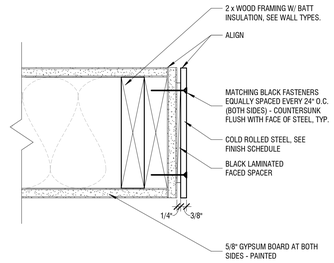

6 COLD ROLLED STEEL OPENING JAMB DETAIL
3" = 1'-0"

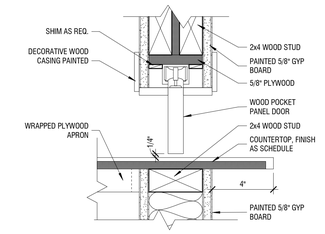

1 HEAD/SILL DETAIL FOR POCKET DOOR AT COUNTER
3" = 1'-0"

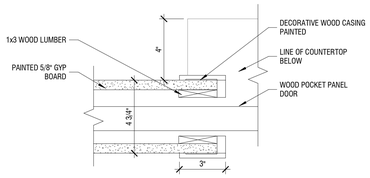

2 JAMB DETAIL FOR POCKET DOOR AT COUNTER
3" = 1'-0"

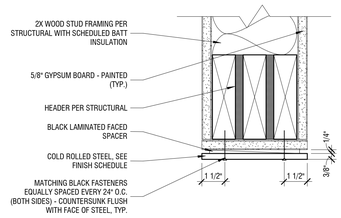

3 COLD ROLLED STEEL OPENING HEADER DETAIL
3" = 1'-0"

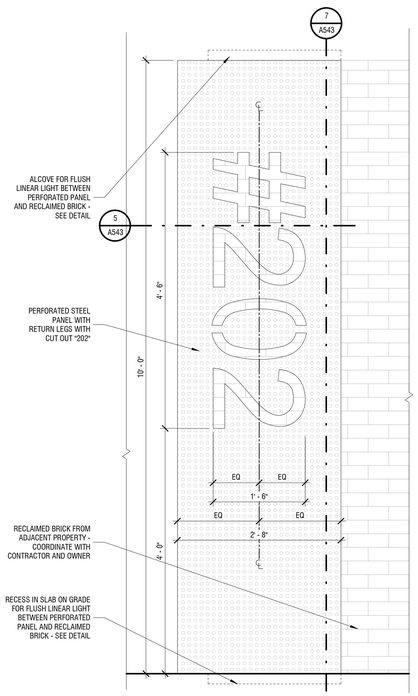

4 INTERIOR ENTRY SIGN
1" = 1'-0"

Babcock Design

Salt Lake City
52 Exchange Place
Salt Lake City, UT 84111
801.531.1144

Boise
800 W Main Street, Suite 940
Boise, ID 83702
208.424.7675

babcockdesign.com

Consultant

CITY OF ALPINE

ALPINE FIRE STATION #202

50 E 100 N ALPINE, UT 84004

Revisions

Num.	Description	Date

Project Number	25116
Original Issue	04.16.2026
Project Status	CONSTRUCTION DOCUMENTS

The information and content represented herein is considered by law the architect's instruments of service and are the property of Babcock Design. They are available for limited review and evaluation by clients, governmental agencies, and contractors prior to construction, but may not be altered without the author's written consent. They are intended for use only for the project specified and are to be used for no other purpose or project including additions to or modification of the completed project. No part thereof may be copied, reproduced, photographed, modified, published, uploaded, transmitted, disclosed, sold, distributed to others in any way including in digital form, or otherwise used without the prior written consent of Babcock Design.

COPYRIGHT © 2025 BABCOCK DESIGN

Stamp

STATE OF UTAH
ROBERT B. COFFEY
136918
LICENSED ARCHITECT

Sheet Title

INTERIOR DETAILS

Sheet Number

A543

Original drawing is 30" x 42" Autodesk Docs://25116 - ALPINE FIRE STATION 202/25116 – Alpine Fire Station 202.rvt
Current as of: 4/16/2026 9:47:42 PM

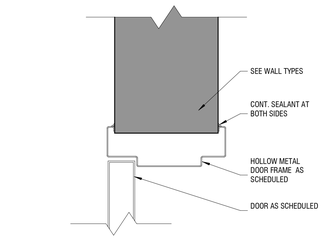

16 HOLLOW METAL HEAD TYPICAL
3" = 1'-0"

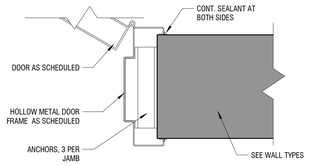

17 HOLLOW METAL JAMB TYP
3" = 1'-0"

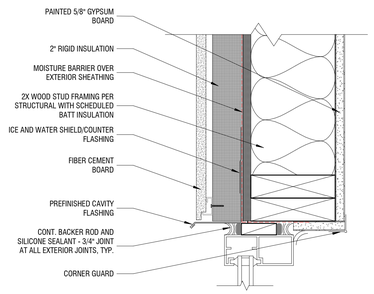

18 EXTR. ALUM. STOREFRONT HEAD AT FIBER CEMENT BOARD
3" = 1'-0"

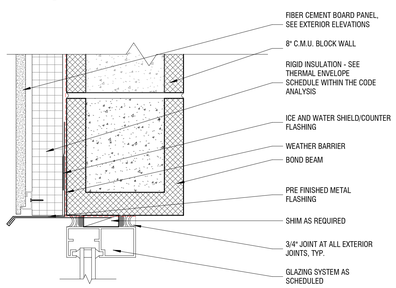

19 EXTR. ALUM. STOREFRONT HEAD @ CMU W/ FCP (JAMB SIM.)
3" = 1'-0"

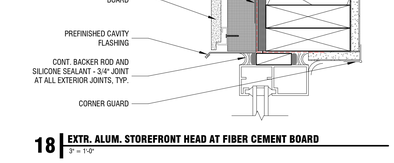

20 EIFS/FC SIDING INSIDE CORNER TRANSITION AT STOREFRONT JAMB
3" = 1'-0"

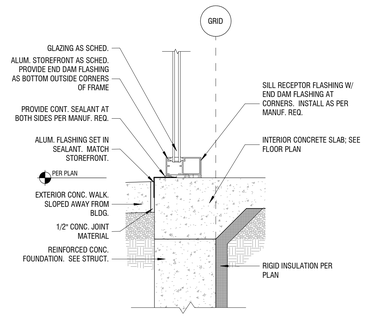

12 TURN-DOWN SLAB AT STOREFRONT SILL
1 1/2" = 1'-0"

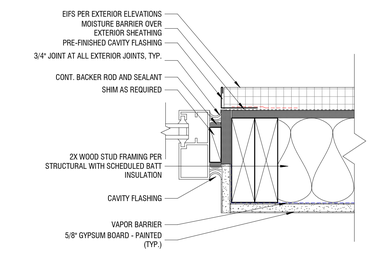

13 EXTR. ALUM. STOREFRONT JAMB AT E.I.F.S.
3" = 1'-0"

19 EXTR. ALUM. STOREFRONT HEAD @ CMU W/ FCP (JAMB SIM.)
3" = 1'-0"

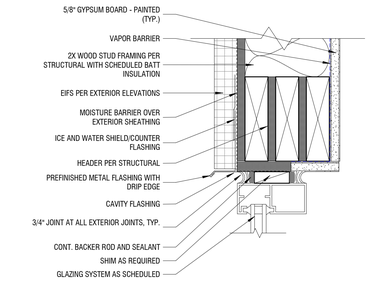

14 EXTR. ALUM. STOREFRONT HEAD AT E.I.F.S.
3" = 1'-0"

15 EXTR. ALUM. STOREFRONT SILL @ THIN BRICK
3" = 1'-0"

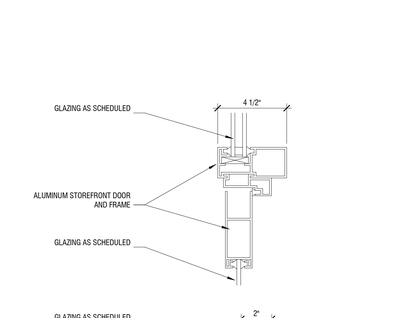

9 TYP. EXTERIOR ALUM. STOREFRONT DETAILS
3" = 1'-0"

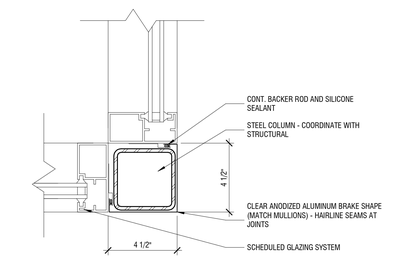

11 EXTR. ALUM. STOREFRONT DOOR HEAD @ BRICK
3" = 1'-0"

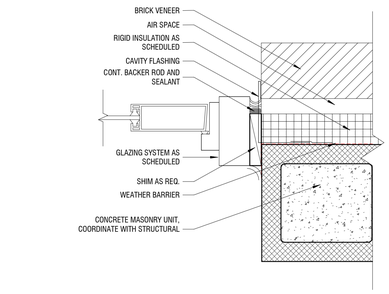

5 EXTR. ALUM. STOREFRONT DOOR JAMB @ BRICK
3" = 1'-0"

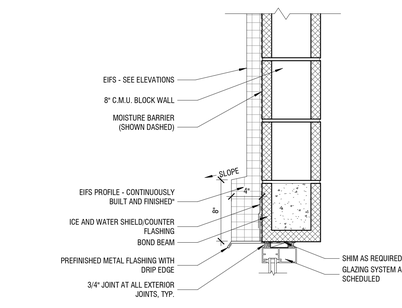

6 EXTR. STOREFRONT HEAD AT CMU - EIFS
1 1/2" = 1'-0"

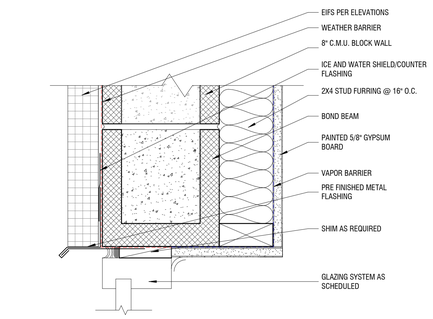

7 EXTR. ALUM. STOREFRONT HEAD @ CMU W/ FURRING WALL(JAMB SIM.)
3" = 1'-0"

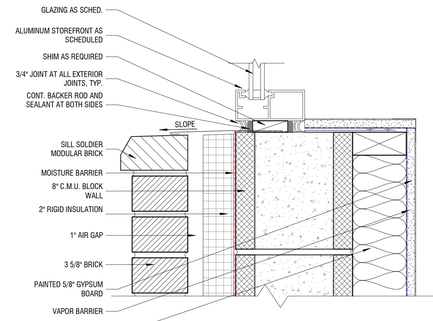

8 EXTR. ALUM. STOREFRONT SILL @ CMU/BRICK CAP
3" = 1'-0"

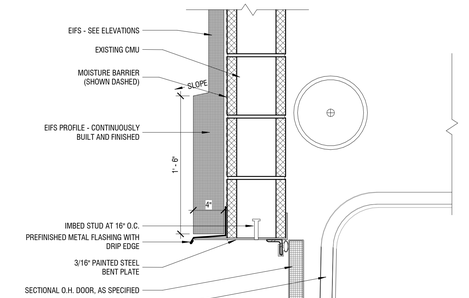

1 SECTIONAL DOOR HEAD AT APPARATUS BAY - EIFS
1 1/2" = 1'-0"

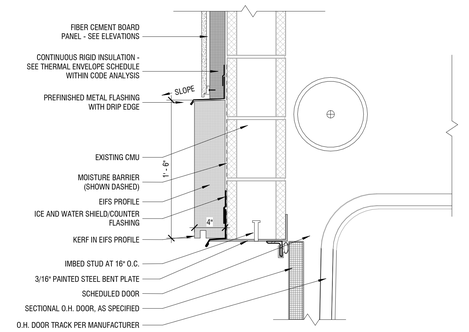

2 COILING DOOR HEAD AT APPARATUS BAY - FCP
1 1/2" = 1'-0"

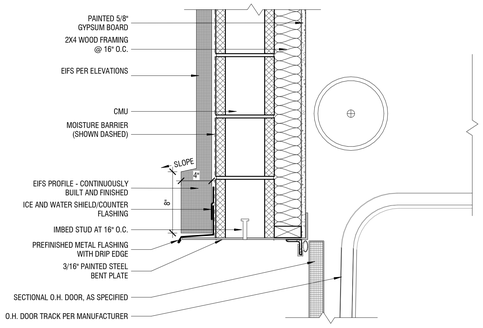

3 COILING DOOR HEAD
1 1/2" = 1'-0"

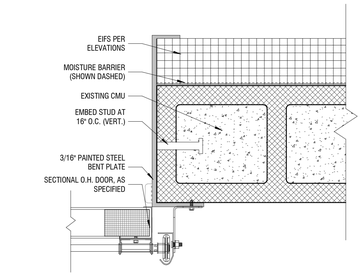

4 SECTIONAL DOOR JAMB AT APPARATUS BAY
3" = 1'-0"

Babcock Design

Salt Lake City
52 Exchange Place
Salt Lake City, UT 84111
801.531.1144

Boise
800 W Main Street, Suite 940
Boise, ID 83702
208.424.7675

babcock**design**.com

Consultant

CITY OF ALPINE

ALPINE FIRE STATION #202

50 E 100 N ALPINE, UT 84004

Revisions

Num.	Description	Date

Project Number	25116
Original Issue	04.16.2026
Project Status	CONSTRUCTION DOCUMENTS

The information and content represented herein is considered by law the architect's instruments of service and are the property of Babcock Design. They are available for limited review and evaluation by clients, consultants, contractors, government agencies, vendors, and office personnel only in accordance with this notice. They are intended for use only for the project specified and are to be used for no other purpose or location without the permission of Babcock Design. Unauthorized use, including but not limited to, reuse, reproduction, photographed, modified, published, uploaded, transmitted, disclosed, sold, distributed to others in any way including in digital form, or otherwise used without the prior written consent of Babcock Design.

COPYRIGHT © 2025 BABCOCK DESIGN

Stamp

STATE OF UTAH
ROBERT B. COFFEY
136918
LICENSED ARCHITECT

Sheet Title

OPENING DETAILS

Sheet Number

A561

Current as of: 4/16/2026 9:47:48 PM

Original drawing is 30" x 42" Autodesk Docs://25116 - ALPINE FIRE STATION 202/25116 - Alpine Fire Station 202.rvt

Design No. **U905**

January 14, 2026

Bearing Wall Rating — 2 HR.
Nonbearing Wall Rating — 2 HR
This design was evaluated using a load design method other than the Limit States Design Method (e.g., Working Stress Design Method). For jurisdictions employing the Limit States Design Method, such as Canada, a load restriction factor shall be used — See Guide BXUV or BXUV7

*** Indicates such products shall bear the UL or cUL Certification Mark for jurisdictions employing the UL or cUL Certification (such as Canada), respectively.**

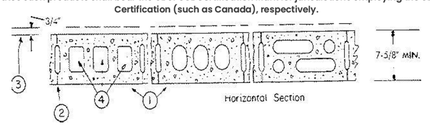

1. **Concrete Blocks* —** Various designs. Classification D-2 (2 hr).
See **Concrete Blocks** category for list of eligible manufacturers.

2. **Mortar —** Blocks laid in full bed of mortar, nom. 3/8 in. thick, of not less than 2-1/4 and not more than 3-1/2 parts of clean sharp sand to 1 part Portland cement (proportioned by volume) and not more than 50 percent hydrated lime (by cement volume). Vertical joints staggered.

3. **Portland Cement Stucco or Gypsum Plaster —** Add 1/2 hr to classification if used. Where combustible members are framed in wall, plaster or stucco must be applied on the face opposite framing to achieve a max. Classification of 1-1/2 hr. Attached to concrete blocks (item 1).

4. **Loose Masonry Fill —** If all core spaces are filled with loose dry expanded slag, expanded clay or shale (Rotary Kiln Process), water repellant vermiculite masonry fill insulation, or silicone treated perlite loose fill insulation add 2 hr to classification.

5. **Foamed Plastic* —** (Optional-Not Shown) — 1-1/2 in. thick max, 4 ft wide sheathing attached to concrete blocks (item 1).
ATLAS ROOFING CORP — EnergyShield Pro Wall Insulation, EnergyShield Pro 2 Wall Insulation, EnergyShield CGF Pro, EnergyShield Ply Pro, EnergyShield® CGF, EnergyShield® PanelCast, EnergyShield® and "EnergyShield® XR

DUPONT DE NEMOURS, INC. — Types Thermax Sheathing, Thermax Light Duty Insulation, Thermax Heavy Duty Insulation, Thermax Metal Building Board, Thermax White Finish Insulation, Thermax ci Exterior Insulation, Thermax XARMOR ci Exterior Insulation, Thermax IH Insulation, Thermax Plus Liner Panel, Thermax Heavy Duty Plus (HDP), TUFF-R™ ci Insulation, Thermax Butler Stylwall Insulation Board and Thermax Morton Heavy Duty Insulation Board

Amrize Building Envelope LLC — "Enverge™ CI Foil Exterior Wall Insulation" and "Enverge™ CI Glass Exterior Wall Insulation"

HUNTER PANELS, A DIVISION OF CARLISLE CONSTRUCTION MATERIALS, LLC — Types "Xci-Class A", "Xci Foil (Class A)", "Xci 286"

RMAX, A BUSINESS UNIT OF SIKA CORPORATION — Types "TSX-8500", "ECOMAXci FR", "TSX-8510", "ECOMAX xi FR White", "ECOMAXci", "ECOMAXci FR Air Barrier", "Thermasheath-XP", "Thermasheath", "Durasheath"

JOHNS MANVILLE — Type "AP Foil-Faced Foam Sheathing"

5A. **Building Units* —** As an alternate to Items 5, min. 1-in thick polyisocyanurate composite foamed plastic insulation boards, nom. 48 by 48 or 96 in.

ATLAS ROOFING CORP — EnergyShield® Ply

HUNTER PANELS, A DIVISION OF CARLISLE CONSTRUCTION MATERIALS, LLC — "Xci NB", "Xci Ply"

RMAX, A BUSINESS UNIT OF SIKA CORPORATION — "Thermasheath-SI", "ECOBASEci", "ThermaBase-CI", "ECOMAXci FR Ply", "ECOMAXci Ply".

*** Indicates such products shall bear the UL or cUL Certification Mark for jurisdictions employing the UL or cUL Certification (such as Canada), respectively.**

Last Updated on 2026-01-14

The appearance of a company's name or product in this database does not in itself assure that products so identified have been manufactured under UL Solutions' Follow – Up Service. Only those products bearing the UL Mark should be considered to be Certified and covered under UL Solutions' Follow - Up Service. Always look for the Mark on the product.

UL Solutions permits the reproduction of the material contained in Product iQ subject to the following conditions: 1. The Guide Information, Assemblies, Constructions, Designs, Systems, and/or Certifications (files) must be presented in their entirety and in a non-misleading manner, without any manipulation of the data (or drawings). 2. The statement "Reprinted from Product iQ with permission from UL Solutions" must appear adjacent to the extracted material. In addition, the reprinted material must include a copyright notice in the following format: "©2026 UL LLC."

Babcock Design

Salt Lake City
52 Exchange Place
Salt Lake City, UT 84111
801.531.1144

Boise
800 W Main Street, Suite 940
Boise, ID 83702
208.424.7675

babcock**design**.com

Consultant

CITY OF ALPINE

ALPINE FIRE STATION #202

50 E 100 N ALPINE, UT 84004

Revisions

Num.	Description	Date

Project Number	25116
Original Issue	04.16.2026
Project Status	CONSTRUCTION DOCUMENTS

The information and content represented herein is considered by law the architects instruments of service and are the property of Babcock Design. They are available for limited review and evaluation by clients, consultants, contractors, government agencies, vendors, and office personnel only in accordance with this notice. They are intended for use only for the project specified and are to be used for no other purpose or project including additions to or modification of the completed project. No part thereof may be copied, reproduced, photographed, modified, published, uploaded, exhibited, advertised, sold, distributed to others in any way including in digital form, or offered or used without the prior written consent of Babcock Design.

COPYRIGHT © 2025 BABCOCK DESIGN

Stamp

Sheet Title

UL RATINGS AND DIAGRAMS

Sheet Number

A601

Original drawing is 30" x 42" Autodesk Docs://25116 - ALPINE FIRE STATION 202/25116 - Alpine Fire Station 202.rvt

Created at: 4/16/2026 8:47:47 PM

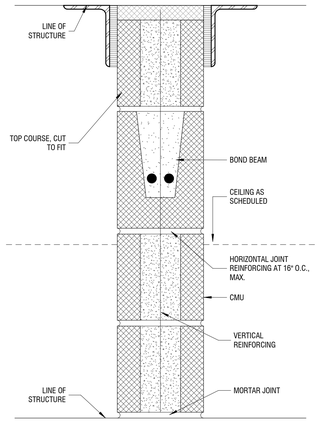

CMU CMU WALL
NOT TO SCALE

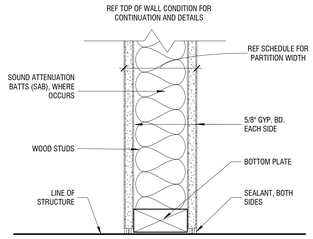

PARTITION TYPE	CORE WIDTH	PARTITION WIDTH
K	0' - 3 1/2"	0' - 4 3/4"
K6	0' - 5 1/2"	0' - 6 3/4"

K WOOD STUD WITH 1 LAYER 5/8" GYP. BD. ON EACH SIDE
NOT TO SCALE

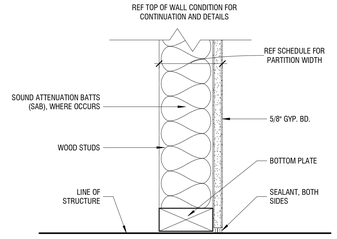

PARTITION TYPE	CORE WIDTH	PARTITION WIDTH
M	0' - 3 1/2"	0' - 4 1/8"
M2	0' - 1 1/2"	0' - 2 1/8"

M WOOD STUD WITH 1 LAYER 5/8" GYP. BD. ON ONE SIDE
NOT TO SCALE

PARTITION GENERAL NOTES

1. PARTITIONS ARE DISTINGUISHED ON FLOOR PLANS BY SYMBOL DESIGNATION, GRAPHIC DESIGNATION OR A COMBINATION OF BOTH DESIGNATIONS. SOME PARTITION TYPES SHOWN ON THIS SHEET MAY NOT BE USED ON THIS PROJECT.
2. ALL WALLS NOT DESIGNATED WITH A GRAPHIC OR TAG TO BE **TYPE 'B'**. IF UNCLEAR CONTACT ARCHITECT.
3. SOUND TRANSMISSION CLASS (STC) IS A RATING SYSTEM THAT DESCRIBES THE ABILITY OF AN ASSEMBLY TO REDUCE THE TRANSMISSION OF SOUND. STC RATINGS LISTED ARE BASED ON LABORATORY TESTING AND ARE NOT INDICATIVE OF RESULTS IN FIELD.
4. SEE SPECIFICATIONS FOR SOUND ATTENUATION BATTS (SAB) REQUIREMENTS. WHERE SAB ARE INDICATED, THEY SHALL EXTEND CONTINUOUSLY FROM FLOOR TO STRUCTURE ABOVE.
5. PARTITIONS ARE INDICATED WITH CONVENTIONAL GYPSUM WALLBOARD U.N.O.: UPGRADE TO PREMIUM TYPES OF WALLBOARD (I.E., MOISTURE-RESISTANT, TILE-BACKER BOARD, ACOUSTICALLY ENHANCED, ETC.) BASED ON THEIR LOCATION AND ACCORDING TO REQUIREMENTS LISTED IN THE SPECIFICATIONS.
6. SEALANTS INDICATED MAY BE FOR FIRE RATING, SMOKE RATING, AIR PRESSURE CONTAINMENT, ACOUSTIC RATING, VERMIN CONTROL, MOVEMENT (CRACK) CONTROL AND/OR BIOLOGICAL CONTAINMENT. SEALANT JOINTS ARE TO BE SIZED FOR EXPECTED MOVEMENT OF JOINT WITH EXPANSION/CONTRACTION CAPACITY OF SEALANT MATERIAL TO MAINTAIN THE INTEGRITY OF THE SEAL FOR THESE APPLICABLE PARAMETERS - SEE SPECIFICATIONS.
7. "LINE OF STRUCTURE" INDICATED FOR EACH PARTITION IS DIAGRAMMATIC ONLY AND DOES NOT INDICATE EXACT CONSTRUCTION CONDITIONS OR GEOMETRY.
8. ALL DIMENSIONS ARE TO COLUMN CENTERLINES OR TO FACE OF FRAMING, U.N.O. CLEAR DIMENSIONS INDICATE DIMENSION BETWEEN FINISHES.
9. FIRE RESISTANT AND FIRE RESISTANT SMOKE BARRIER RATINGS ARE TO CONTINUE THROUGH ALL OPENINGS IN RATED PARTITIONS.
10. SMOKE RESISTANT, FIRE RESISTANT, AND FIRE RESISTANT SMOKE BARRIER PARTITIONS SHALL EXTEND AND SEAL TO INSIDE FACE OF EXTERIOR SHEATHING, INCLUDING EXTENSIONS THROUGH SOFFITS.
11. REFER TO THE TOILET ACCESSORIES SHEET AND CASEWORK SHEET FOR MOUNTING DETAIL INFORMATION.
12. REFER TO SHEET **A612** FOR ADDITIONAL PARTITION DETAILS AND FRAMING INFORMATION.
13. SEE SHEET A612 FOR WOOD STUD SIZE, SPACING, HEIGHT LIMITATIONS, AND ADDITIONAL INFORMATION.
14. PARTITIONS REQUIRED TO BE SMOKE RESISTANT, FIRE RESISTANT, OR BOTH FIRE AND SMOKE RESISTANT ARE SHOWN GRAPHICALLY ON PLANS WITH HATCH PATTERNS.
15. THE TYPICAL PARTITION TAG SYMBOL DESIGNATION HAS THREE CHARACTERS. THE FIRST CHARACTER IS A LETTER INDICATING THE PARTITION TYPE. THE SECOND CHARACTER IS A NUMERIC INDICATION OF THE STUD WIDTH. IN SOME INSTANCES, ADDITIONAL CHARACTERS OR "MODIFIER" MAY BE ADDED TO THE END TO INDICATE ADDITIONAL CHARACTERISTICS WITHIN THE WALL. REFER TO CHART BELOW FOR MODIFIER DEFINITIONS. IF NO PARTITION TAG OR NUMERIC SECOND CHARACTER EXISTS, THE STUD SIZE WILL BE 3 5/8" FOR METAL STUD CONSTRUCTION AND 2X4 FOR WOOD CONSTRUCTION TYPICAL, U.N.O.
16. ALL PARTITIONS EXTEND TO DECK UNLESS NOTED OTHERWISE.
17. ALL STUD FRAMING AT EXTERIOR WALLS ARE TO RECEIVE VAPOR BARRIER ON THE INSIDE FACE OF FRAMING

WALL TAG LEGEND

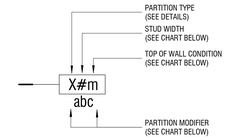

STUD WIDTH

#	METAL STUD WIDTH	WOOD STUD WIDTH
1	1 5/8"	
2	2 1/2"	
-	3 5/8"	3 1/2"
6	6"	5 1/2"
8	8"	7 1/4"
10	10"	
12	12"	

TOP OF WALL CONDITION

ALL WALL ASSEMBLIES EXTEND TO DECK UNLESS NOTED OTHERWISE
SEE DETAILS ON SHEET A612

B PARTITION EXTENDS TO BOTTOM OF CEILING

C PARTITION EXTENDS TO A MINIMUM OF 6" ABOVE CEILING

P PARTIAL HEIGHT WALL

PARTITION MODIFIER

a PROVIDE SOUND ATTENUATION BATS TO FILL STUD CAVITY

s IN LIEU OF 5/8" GYP. BOARD - SELECT AREAS TO RECEIVE PLYWOOD PER ARCHITECTURAL DETAILING WITHIN THAT AREA

FIRE RATING LEGEND

NOT ALL FIRE RATINGS MAY BE USED ON THIS PROJECT. DRAWINGS SHOULD BE VIEWED/PRINTED IN COLOR TO ACCURATELY DEPICT THE RATED WALL CONDITION.

1-HR FIRE BARRIER/PARTITION *(IBC 707, 708)*

2-HR FIRE BARRIER *(IBC 707)*

Babcock Design

Salt Lake City
52 Exchange Place
Salt Lake City, UT 84111
801.531.1144

Boise
800 W Main Street, Suite 940
Boise, ID 83702
208.424.7675

babcock**design**.com

Consultant

CITY OF ALPINE

ALPINE FIRE STATION #202

50 E 100 N ALPINE, UT 84004

Revisions

Num.	Description	Date

Project Number	25116
Original Issue	04.16.2026
Project Status	CONSTRUCTION DOCUMENTS

The information and content represented herein is considered by law the architect's instruments of service and are the property of Babcock Design. They are available for limited review and evaluation by clients, contractors, and consultants for project bidding or construction. Any other use or reuse without the written consent of this notice. They are intended for use only for the project specified and are to be used for no other purpose or project including additions to or modification of the completed project. No part thereof may be copied, reproduced, photographed, modified, published, uploaded, transmitted, disclosed, sold, distributed to others in any way including in digital form, or otherwise used without the prior written consent of Babcock Design.

COPYRIGHT © 2025 BABCOCK DESIGN

Stamp

STATE OF UTAH
ROBERT B. CUTLER
136918
LICENSED ARCHITECT

Sheet Title

STANDARD PARTITION TYPES

Sheet Number

A611

Current as of: 4/16/2026 9:47:50 PM
Original drawing is 30" x 42" Autodesk Docs://25116 - ALPINE FIRE STATION 202/25116 - Alpine Fire Station 202.rvt

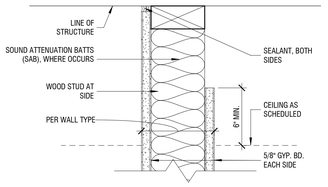

5 TOP OF WALL CONDITION - TYPE 'M' (NON-RATED)
3" = 1'-0"

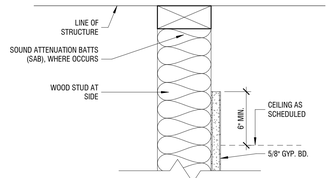

3 TOP OF WALL CONDITION - TYPE 'C2' (NON-RATED)
3" = 1'-0"

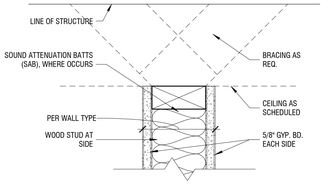

1 TOP OF WALL CONDITION - TYPE 'B' (NON-RATED)
3" = 1'-0"

ADDITIONAL NOTES:

1. BUILDING CODE REQUIRES THAT "SMOKE PARTITIONS" BE SEALED TO STRUCTURE AS INDICATED TO SUCCESSFULLY "LIMIT THE PASSAGE OF SMOKE".
2. CONDITIONS INDICATED TO SHOW DESIGN INTENT, AND NOT INTENDED TO BE PROPRIETARY. CONTRACTOR MAY EMPLOY SIMILAR UL-APPROVED CONTROL JOINTS DESIGNS THAT ARE APPROPRIATE FOR THE SPECIFIC CONDITION. JOINTS TO BE SIZED TO ACCOMMODATE MOVEMENT CAPABILITIES OF FIRESTOP ASSEMBLY.

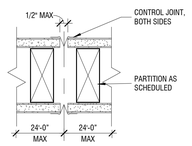

CONTROL JOINT IN GWB PARTITION

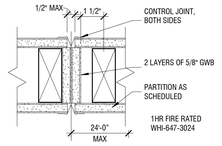

CONTROL JOINT IN 1 HR FIRE RATED PARTITION

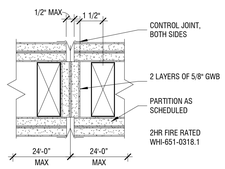

CONTROL JOINT IN 2 HR FIRE RATED PARTITION

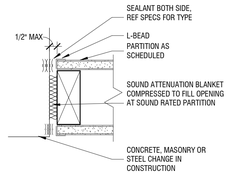

CONTROL JOINT AT PARTITION INTERSECTION OR CHANGE IN CONSTRUCTION

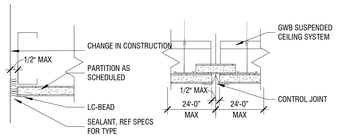

CONTROL JOINT IN PARTITION AT NON-EXPOSED EDGE

CONTROL JOINT IN GYPSUM BOARD CEILING

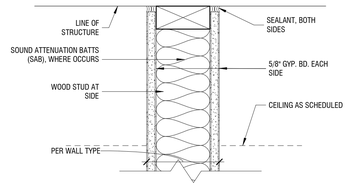

4 TOP OF WALL CONDITION - TYPE 'D' (NON-RATED)
3" = 1'-0"

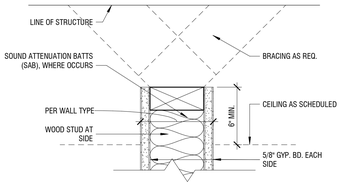

2 TOP OF WALL CONDITION - TYPE 'C1' (NON-RATED)
3" = 1'-0"

8 WA-M-03_GWB DETAIL - TYPICAL GYPSUM WALLBOARD CONTROL JOINT DETAILS1
3" = 1'-0"

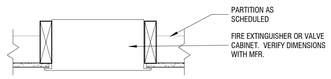

FRAMING AT PENETRATION IN NON-RATED CHASE

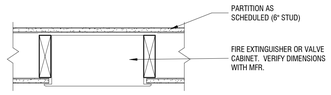

FRAMING AT PENETRATION IN NON-RATED WALL

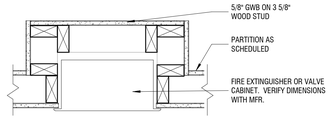

FRAMING AT PENETRATION IN NON-RATED WALL

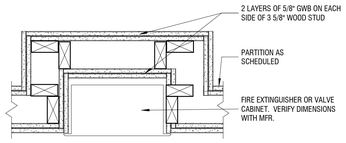

FRAMING AT PENETRATION IN 2-HR FIRE RATED WALL

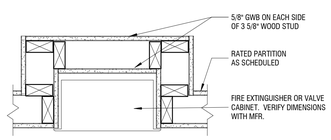

FRAMING AT PENETRATION IN 1-HR FIRE RATED WALL

9 FP-04_NON-RATED PENETRATION AND CABINET DETAILS
1 1/2" = 1'-0"

WALL PRIORITY NOTES:
1. WHERE WALLS OF DIFFERENT FUNCTIONS/ RATINGS INTERSECT: WALLS OF HIGHER PRIORITY SHALL BE CONTINUOUS.
2. LOWER PRIORITY WALLS SHALL "ABUT" AND BE "SEALED TO" HIGHER PRIORITY WALLS, BUT SHALL NOT INTERRUPT CONTINUITY OF THE HIGHER PRIORITY WALL.

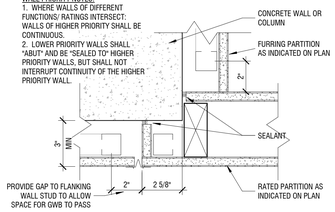

INTERSECTION AT RATED PARTITION AND CONCRETE

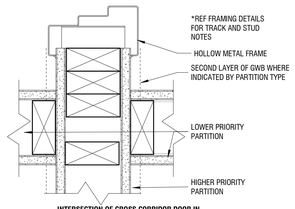

INTERSECTION OF CROSS CORRIDOR DOOR IN RATED PARTITION

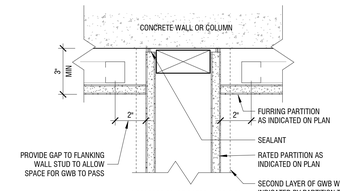

INTERSECTION OF RATED PARTITION AND CONCRETE

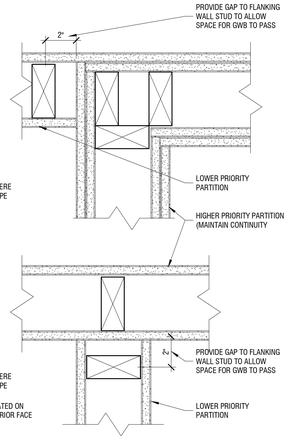

INTERSECTION AT VARIOUS WALL PRIORITY CONFIGURATIONS

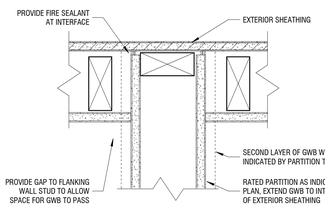

INTERSECTION AT RATED PARTITION AND EXTERIOR WALL

7 WA-04_GWB DETAIL - TYPICAL GYPSUM WALLBOARD PRIORITY DETAILS
3" = 1'-0"

1 JAMB @ OPENINGS

3 SILL @ OPENINGS

5 FRAMED OPENING @ JAMB

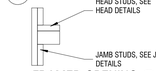

7 FRAMED OPENING @ JAMB

2 HEADER @ OPENINGS

4 BASE PLATE

6 BASE PLATE @ OPENINGS

NOTE: SEE STRUCTURAL DOCUMENTS FOR TYPICAL MINIMUM NAILING REQUIREMENTS FOR BEARING & NON-BEARING FRAMING

FOR USE ON NON-BEARING WALLS ONLY

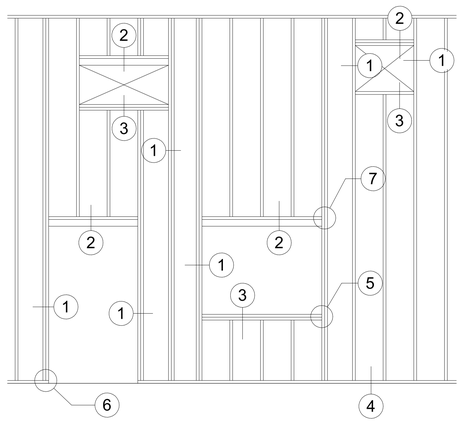

6 TYPICAL WALL & OPENING FRAMING
3/4" = 1'-0"

Babcock Design

Salt Lake City
52 Exchange Place
Salt Lake City, UT 84111
801.531.1144

Boise
800 W Main Street, Suite 940
Boise, ID 83702
208.424.7675

babcockdesign.com

Consultant

CITY OF ALPINE

ALPINE FIRE STATION #202

50 E 100 N ALPINE, UT 84004

Revisions

Num.	Description	Date

Project Number	25116
Original Issue	04.16.2026
Project Status	CONSTRUCTION DOCUMENTS

The information and content represented herein is considered by law the architect's instruments of service and are the property of Babcock Design. They are available for limited review and evaluation by clients, consultants, contractors, governmental agencies, vendors, and office personnel only in accordance with this notice. Any other use, including but not limited to reproduction, copying, revising, or selling of this drawing or project including additions to or modification of the completed project, No part thereof may be copied, reproduced, photographed, modified, published, uploaded, transmitted, disclosed, sold, distributed to others in any way including in digital form, or otherwise used without the prior written consent of Babcock Design.

COPYRIGHT © 2025 BABCOCK DESIGN

Stamp

STATE OF UTAH · ROBERT B. COTTLE · 138818 · LICENSED ARCHITECT

Sheet Title
PARTITION HEAD, STANDARD PARTITIONS AND FRAMING DETAILS

Sheet Number
A612

Current as of: 4/15/2026 8:47:33 PM
Original drawing is 30" x 42" Autodesk Docs://25116 - ALPINE FIRE STATION 202/25116 - Alpine Fire Station 202.rvt

DOOR AND FRAME SCHEDULE														
IDENTIFICATION		PANEL			PANEL				FRAME			FIRE RATING	COMMENTS	DOOR #
		DIMENSIONS		NO. OF PANELS										
DOOR #	ROOM NAME	W	H		TYPE	MATERIAL	FINISH	GLAZING	TYPE	MATERIAL	FINISH			
LEVEL 1														
100	FIRE RISER	3' - 0"	8' - 0"	1	HM	HM	P-05	-	2	HM	P-05			100
101	LOBBY / CULTURE POINT	6' - 0"	8' - 0"	2	FG	ALUM	CA	GL-2T	W05	ALUM	CA		TO BE EQUIPPED WITH DOOR BUZZER AND ADA ACTUATOR, COORD. WITH DOOR HARDWARE SPECIFICATIONS	101
103	DORM 6	3' - 0"	8' - 0"	1	F	WD	WD-03	-	1	HM	P-05 / P-06		DORM SIDE OF DOOR FRAME = P-05 COORIDOR SIDE OF DOOR FRAME = P-06	103
104	DORM 5	3' - 0"	8' - 0"	1	F	WD	WD-03	-	1	HM	P-05 / P-06		DORM SIDE OF DOOR FRAME = P-05 COORIDOR SIDE OF DOOR FRAME = P-06	104
105	DORM 4	3' - 0"	8' - 0"	1	F	WD	WD-03	-	1	HM	P-05 / P-06		DORM SIDE OF DOOR FRAME = P-05 COORIDOR SIDE OF DOOR FRAME = P-06	105
106	DORM 3	3' - 0"	8' - 0"	1	F	WD	WD-03	-	1	HM	P-05 / P-06		DORM SIDE OF DOOR FRAME = P-05 COORIDOR SIDE OF DOOR FRAME = P-06	106
107	DORM 2	3' - 0"	8' - 0"	1	F	WD	WD-03	-	1	HM	P-05 / P-06		DORM SIDE OF DOOR FRAME = P-05 COORIDOR SIDE OF DOOR FRAME = P-06	107
108	DORM 1	3' - 0"	8' - 0"	1	F	WD	WD-03	-	1	HM	P-05 / P-06		DORM SIDE OF DOOR FRAME = P-05 COORIDOR SIDE OF DOOR FRAME = P-06	108
109	DORM RR	3' - 0"	8' - 0"	1	F	WD	WD-03	-	1	HM	P-05			109
110	DORM RR	3' - 0"	8' - 0"	1	F	WD	WD-03	-	1	HM	P-05			110
111	DORM RR	3' - 0"	8' - 0"	1	F	WD	WD-03	-	1	HM	P-06			111
112	PUBLIC RR	3' - 0"	8' - 0"	1	F	WD	WD-03	-	1	HM	P-06			112
113	CAPT OFFICE / FLEX	3' - 0"	8' - 0"	1	FG-W	WD	WD-03	GL-4T	1	HM	P-06			113
114A	GYM	3' - 0"	8' - 0"	1	FG-W	WD	WD-03	GL-4T	1	HM	P-06			114A
114B	VESTIBULE	3' - 0"	7' - 0"	1	FG-A	ALUM	CA	GL-2T	3	ALUM	CA			114B
114C	GYM	3' - 0"	8' - 0"	1	FG-A	ALUM	CA	GL-2T	2	ALUM	CA			114C
114D	GYM	10' - 0"	10' - 0"	-	OC	PER MANUF.	PER MANUF.	PER MANUF.	-	PER MANUF.	PER MANUF.		STANDARD SPEED	114D
116	LAUNDRY	3' - 0"	8' - 0"	1	F	WD	WD-03	-	1	HM	P-06			116
116B	MEP	3' - 0"	8' - 0"	1	F	WD	WD-03	-	1	HM	P-06			116B
117	STORAGE	3' - 0"	8' - 0"	1	F	WD	WD-03	-	1	HM	P-06			117
118B	PANTRY	3' - 0"	8' - 0"	1	F	WD	WD-03	-	1	HM	P-06			118B
119	DINING	3' - 0"	8' - 0"	1	FG-A	ALUM	CA	GL-2T	W02	ALUM	CA			119
121	MED STOCK	3' - 0"	8' - 0"	1	F	WD	WD-03	-	2	HM	P-06			121
122A	EXISTING APPARATUS BAY	3' - 0"	8' - 0"	1	N	HM	P-04	FIRE RATED	2	HM	P-05	90 MIN.		122A
122B	AIRLOCK	3' - 0"	8' - 0"	1	HG-W	WD	WD-03	GL-4T	1	HM	P-05			122B
123A	DECON RR	3' - 0"	8' - 0"	1	HM	HM	P-04	-	1	HM	P-05			123A
123B	DECON	3' - 0"	8' - 0"	1	HM	HM	P-04	-	1	HM	P-05			123B
124	DECON	4' - 0"	8' - 0"	1	N	HM	P-04	FIRE RATED	2	HM	P-05	90 MIN.		124
125	TURNOUT	4' - 0"	8' - 0"	1	HG-HM	HM	P-04	GL-4T	2	HM	P-05			125
127A	AIRLOCK	3' - 0"	8' - 0"	1	N	HM	P-04	FIRE RATED	2	HM	P-05	90 MIN.		127A
127B	DORM CORRIDOR	3' - 0"	8' - 0"	1	HG-W	WD	WD-03	GL-4T	1	HM	P-06			127B
128C	EXISTING APPARATUS BAY	12' - 0"	14' - 0"	-	OC	PER MANUF.	PER MANUF.	GL-2T	-	PER MANUF.	PER MANUF.		STANDARD SPEED	128C
128D	EXISTING APPARATUS BAY	12' - 0"	14' - 0"	-	OC	PER MANUF.	PER MANUF.	GL-2T	-	PER MANUF.	PER MANUF.		STANDARD SPEED	128D
128E	EXISTING APPARATUS BAY	12' - 0"	14' - 0"	-	OC	PER MANUF.	PER MANUF.	GL-2T	-	PER MANUF.	PER MANUF.		STANDARD SPEED	128E
128F	EXISTING APPARATUS BAY	12' - 0"	14' - 0"	-	OC-HS	PER MANUF.	PER MANUF.	GL-2T	-	PER MANUF.	PER MANUF.		HIGH SPEED	128F
128G	EXISTING APPARATUS BAY	12' - 0"	14' - 0"	-	OC-HS	PER MANUF.	PER MANUF.	GL-2T	-	PER MANUF.	PER MANUF.		HIGH SPEED	128G
128H	EXISTING APPARATUS BAY	12' - 0"	14' - 0"	-	OC-HS	PER MANUF.	PER MANUF.	GL-2T	-	PER MANUF.	PER MANUF.		HIGH SPEED	128H
129	VESTIBULE	6' - 0"	7' - 6"	2	FG-A	ALUM	CA	GL-2T	W09	ALUM	CA			129
130B	COMMUNITY ROOM	3' - 0"	7' - 0"	1	FG-A	ALUM	CA	GL-2T	W09.1	ALUM	CA			130B
131	RESTROOM	3' - 0"	8' - 0"	1	F	WD	WD-03	-	1	HM	P-06			131
132	JANITOR	3' - 0"	8' - 0"	1	F	WD	WD-03	-	1	HM	P-06			132
133	RESTROOM	3' - 0"	8' - 0"	1	F	WD	WD-03	-	1	HM	P-06			133
135A	KITCHEN	3' - 0"	8' - 0"	1	F	WD	WD-03	-	1	HM	P-06			135A
135B	COMMUNITY ROOM	4' - 0"	5' - 1"	2	PD	WD	WD-03	-	PER MANUF.	SEE DETAILS	P-06			135B
136	STORAGE	6' - 0"	7' - 0"	2	F/F	WD	WD-03	-	1	HM	P-06			136
G	GENERATOR	3' - 0"	7' - 0"	1	HM	HM	P-05	-	2	HM	P-05		GENERATOR ENCLOSURE	G

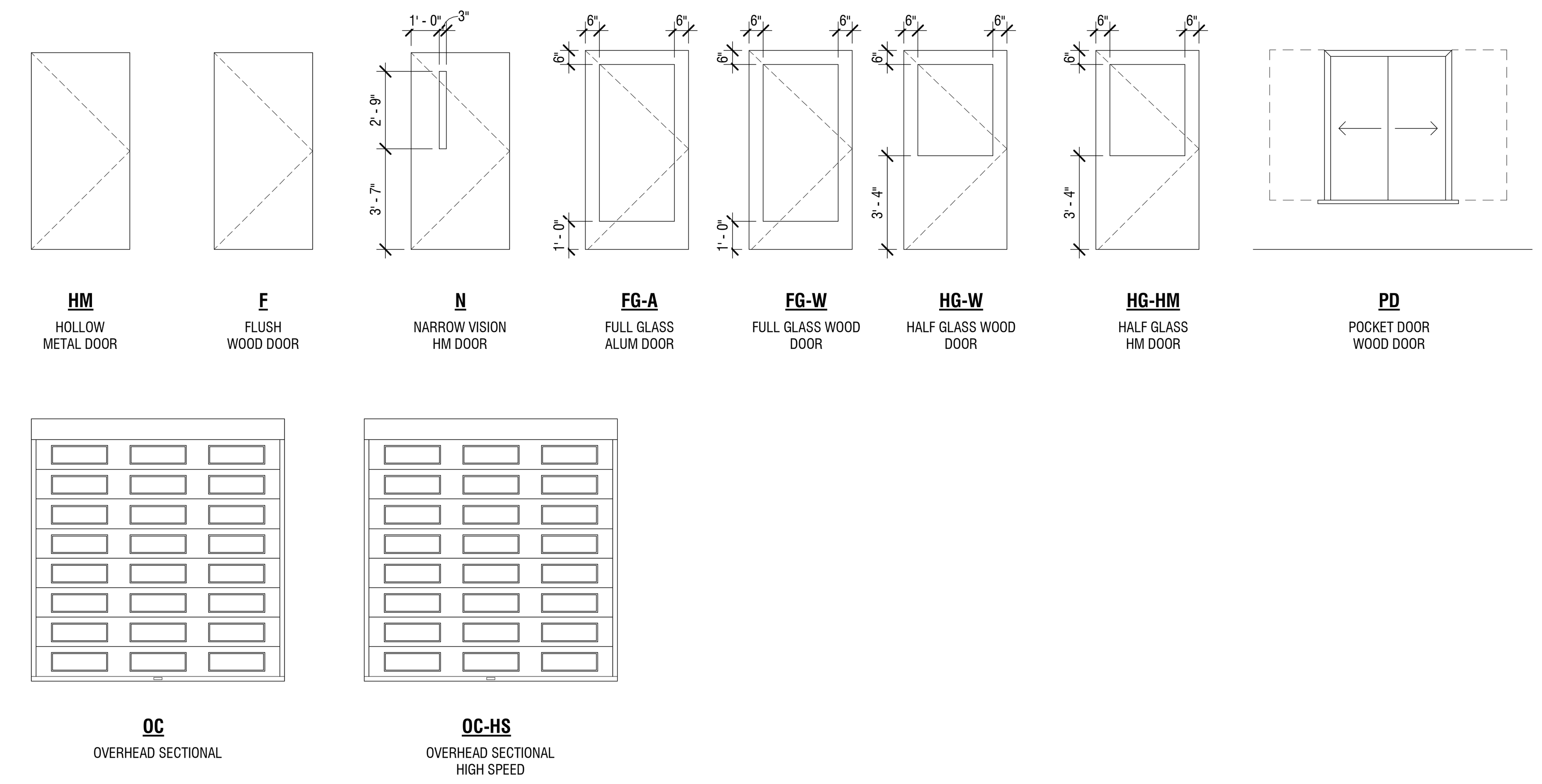

DP DOOR PANEL TYPES
1/4" = 1'-0"

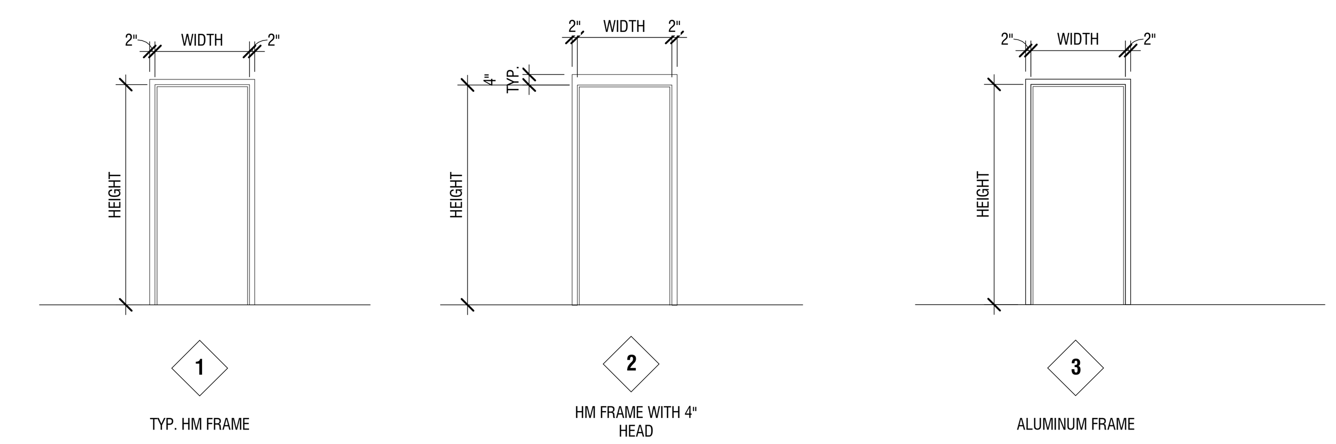

DF DOOR FRAME TYPES
1/4" = 1'-0"

GLAZING GENERAL NOTES

1. PROVIDE CLEAR ANODIZED ALUM FRAMES FOR ALL STOREFRONT SYSTEMS.
2. PROVIDE END DAMS AT BOTTOM OUTSIDE CORNERS OF ALUMINUM STOREFRONT SYSTEMS. INSTALL PER MANUFACTURERS STANDARDS AND REQUIREMENTS.
3. FRAME DIMENSIONS SHOWN ARE NOMINAL. ACTUAL DIMENSIONS MAY VARY DEPENDING ON WINDOW MANUFACTURER AND SYSTEM.
4. SEE SPECIFICATIONS FOR HARDWARE SCHEDULE.

GLAZING LEGEND

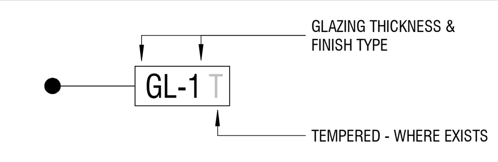

SEE MATERIAL AND FINISH SCHEDULE SHEET FOR GLAZING INFORMATION

DOOR AND WINDOW FINISH LEGEND	
CA	CLEAR ANODIZED ALUMINUM
HM	HOLLOW METAL
ALUM	ALUMINUM
WD	WOOD VENEER

WINDOW & FRAME TYPE - GRAPHICAL SCHEDULE

SCALE: 1/4" = 1'-0"

NOTE: SEE DOOR SCHEDULE AND DOOR TAGS TO MATCH APPROPRIATE FRAME TYPE WITH DOOR TYPES.

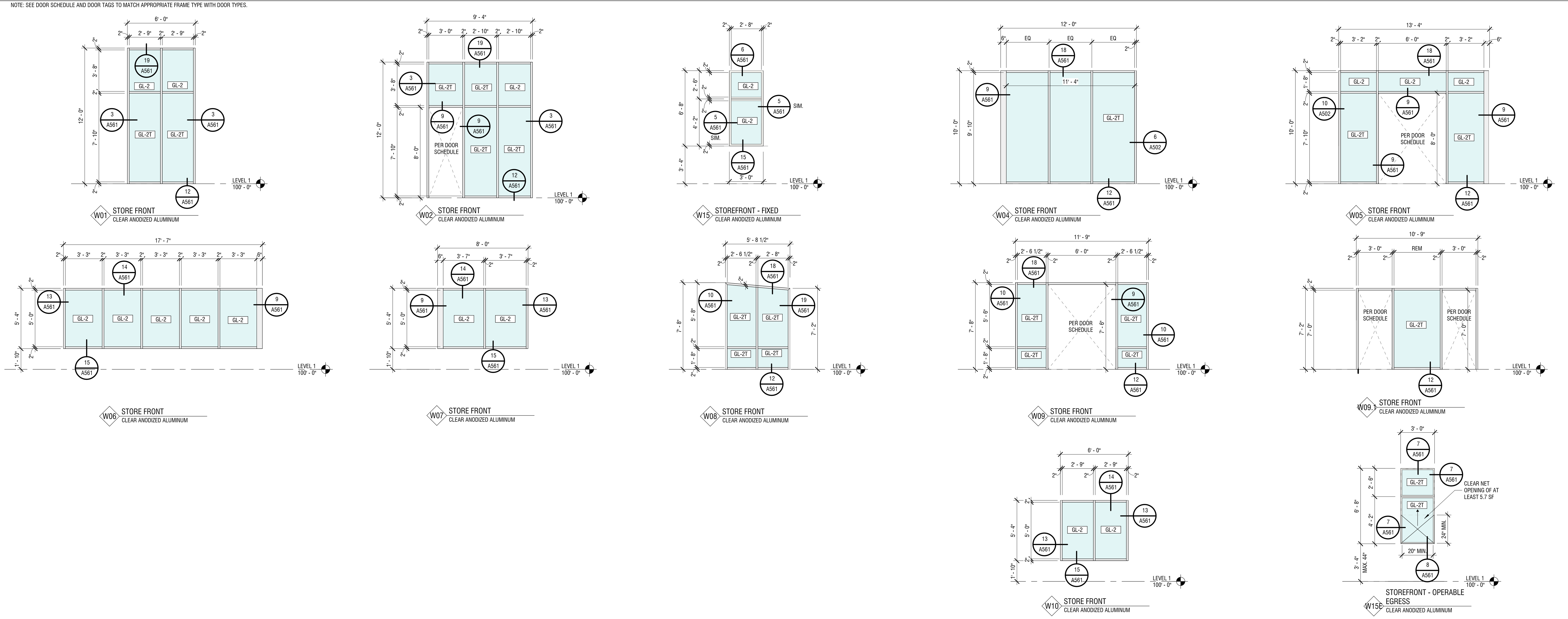

Babcock Design

Salt Lake City
52 Exchange Place
Salt Lake City, UT 84111
801.531.1144

Boise
800 W Main Street, Suite 940
Boise, ID 83702
208.424.7675

babcockdesign.com

Consultant

CITY OF ALPINE

ALPINE FIRE STATION #202

50 E 100 N ALPINE, UT 84004

Revisions

Num.	Description	Date

Project Number	25116
Original Issue	04.16.2026
Project Status	CONSTRUCTION DOCUMENTS

The information and content represented herein is considered by law the architect's instruments of service and are the property of Babcock Design. They are available for limited review and evaluation by clients, consultants, contractors, government agencies, vendors, and office personnel only in accordance with this notice. They are intended for use only for the project specified and are to be used for no other purpose or project including additions to or modification of the completed project. No part thereof may be copied, reproduced, photographed, modified, published, uploaded, transmitted, disclosed, sold, distributed to others in any way including in digital form, or otherwise used without the prior written consent of Babcock Design.

COPYRIGHT © 2025 BABCOCK DESIGN

Stamp

STATE OF UTAH
ROBERT B. COTTLE
136818
LICENSED ARCHITECT

Sheet Title

DOOR, FRAME & WINDOW SCHEDULE

Sheet Number

A621

BASE CABINETS

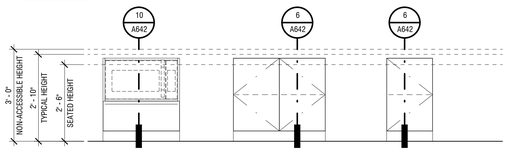

B07 BASE CABINET W/ MICROWAVE SHELF

B03 BASE CABINET W/ (2) DOORS

B02 BASE CABINET W/ (1) DOOR

BASE CABINETS - SPECIALTY

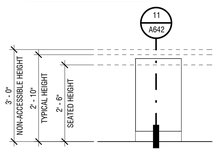

B31 BASE CABINET WASTE PULLOUT

SINK BASE CABINETS

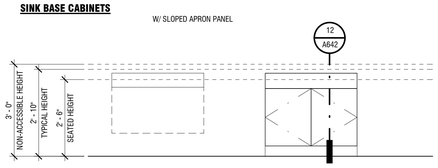

B26 LAVATORY SKIRT WITH COUNTERTOP/BACKSPLASH

B25 SINK CABINET WITH (2) DOORS

BASE CABINETS WITH DRAWERS

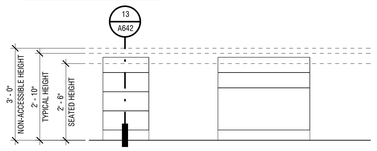

B16 BASE CABINET W/ (4) DRAWERS

B14f FILE DRAWER

B14 BASE CABINET W/ (2) DRAWERS + LATERAL DRAWER

SHELVES

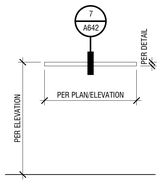

S01 FLOATING SHELF

TALL CABINETS

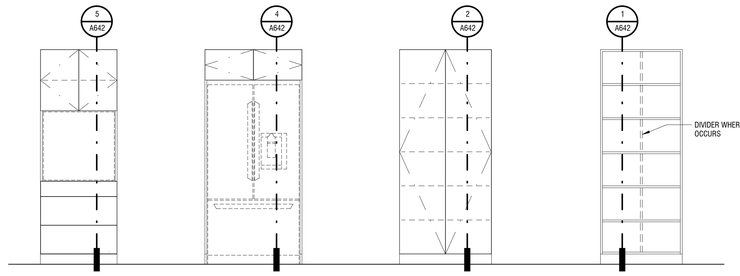

T09 TALL CABINET W/ APPLIANCE OPENING AND DRAWERS/DOORS

T06 REFRIDGERATOR ENCLOSURE WITH UPPER CABINET

T03 TALL CABINET W/ (2) DOORS

T01d WITH DIVIDER

T01 TALL CABINET - OPEN SHELVES

UPPER CABINETS

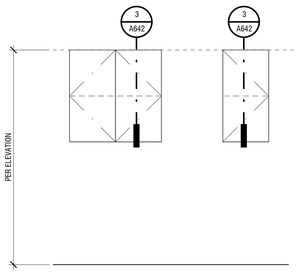

U03 UPPER CABINET W/ (2) DOOR

U02 UPPER CABINET W/ (1) DOOR

CASEWORK FINISH NOTES

- **INTERIOR CABINET FINISH**: 3/4" CORE FACED W/ WHITE MELAMINE
- **COUNTERTOP CONSTRUCTION AND EDGE TYPE** (SEE B5/A642 FOR DETAILS)
  - SLAB EASED KNIFE EDGE & STAINLESS FULL BULLNOSE

HARDWARE TYPES

- CASEWORK PULLS LISTED BELOW ARE BASIS OF DESIGN, PROVIDE SUBMITTAL FOR ARCHITECTS REVIEW.
- FINISH TO BE SELECTED FROM MANUFACTURE'S FULL RANGE OF FINISHES.

H1	BAR PULL	AMEROCK REVOLVE: BP36854FB, BLACK 5 1/16" PULL TYPICAL, 6 5/16" AT TALL CABINET DOORS

HARDWARE PLACEMENT (WIRE OR BAR PULL)

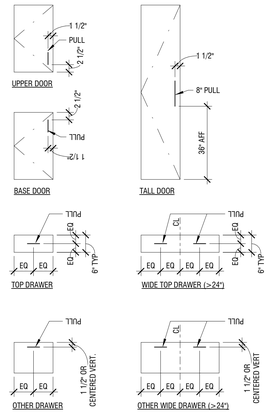

MILLWORK GENERAL NOTES

1. ALL MILLWORK TO BE AWI STANDARDS OF CUSTOM/PREMIUM GRADE.
2. CONCEALED SOFT CLOSE EUROPEAN HINGES ARE TO BE USED
3. RECESSED SHELF STANDARDS ARE TO BE USED
4. ALL EXPOSED SURFACES TO BE FINISH GRADE MATERIAL
5. INSIDE FACES OF DOORS REQUIRE LIKE MATERIAL AND THICKNESS ON BOTH SIDES
6. UNLESS NOTED OTHERWISE, USE MELAMINE FOR ALL SEMI-EXPOSED SURFACES WITHIN CLOSED CABINETS & DRAWERS. SEE DETAILS
7. ALL TOPS AND/OR BOTTOMS ON CABINETS, FILLERS AND OPEN CORNER PANELS THAT DO NOT ABUT AN ADJACENT WALL OR COVERED WITH AN OVERHEAD SOFFIT ARE CONSIDERED EXPOSED AND REQUIRED TO BE FINISHED.
8. OPEN SHELVES & MICROWAVE CABINETS ARE TO BE FINISHED TO MATCH CASEWORK DOOR/DRAWER FRONTS, UNLESS NOTED OTHERWISE.
9. NO SUBSTITUTIONS OR OMISSIONS ARE PERMITTED WITHOUT PRIOR WRITTEN APPROVAL FROM ARCHITECT .
10. REFER TO FINISH SCHEDULE FOR FINISH MATERIAL SPECIFICATIONS
11. CABINET DRAWERS WITH PLASTIC LAMINATE ARE TO HAVE AN EXACT MATCHING SELF EDGE BANDING. STRAIGHT PROFILE.
12. PROVIDE SELF EDGE FINISH ON ALL PLASTIC LAMINATE COUNTERTOPS.
13. UPPER CABINETS ARE TO BE VERTICALLY ALIGNED WITH BASE CABINETS, TYPICAL
14. ADJUSTABLE SHELF QUANTITY IS GRAPHICALLY INDICATED IN ELEVATIONS
15. ADJUSTABLE SHELVING SHALL HAVE 5MM METAL SUPPORT PEGS. SPOON SHAPED.
16. ARCHITECT TO SELECT FROM FULL RANGE OF COLORS AND FINISHES OFFERED BY MANUFACTURERS, INCLUDING CUSTOM
17. ANY FILLERS SHALL BE TESTED IN ACCORDANCE WITH ASTM E84 AND HAVE A FLAME SPREAD OF 0-25 AND A SMOKE INDEX OF 0-450
18. CONTRACTOR TO PROVIDE COUNTERTOP SEAMING DIAGRAM AS PART OF SHOP DRAWINGS
19. ALL COUNTERTOPS TO BE SCRIBED AS TIGHT AS POSSIBLE TO ABUTTING SURFACE.
20. ALL COUNTERTOPS CORNERS TO BE MITERED U.N.O.
21. ALL DRAWER GLIDES ARE TO BE FULL EXTENSION WITH SOFT CLOSE.

CASEWORK LEGEND

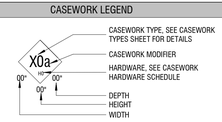

CASEWORK MODIFIER

a ACCESSIBLE HEIGHT WHERE NOTED, CLOSET SHELVING TYPICALLY

d DIVIDER AT OPEN SHELVING, TYPICALLY INSTALLED ON CABINETS>30" WIDE

f PROVIDE FILE DRAWER HARDWARE, SEE DETAILS

r PROVIDE FALSE FRONT DRAWER FOR STOVETOP

CASEWORK SCHEDULE

XXX
00"
00"
00"

TYPE	DESCRIPTION
BASE CABINET	
B03	BASE CABINET W/ (2) DOORS
B07	BASE CABINET W/ MICROWAVE SHELF - CABINET TO HAVE FINISHED INTERIOR
B12	BASE CABINET W/ (2) LATERAL FILE DRAWERS
B14	BASE CABINET W/ (2) DRAWERS + LATERAL FILE DRAWER
B15	BASE CABINET W/ (3) DRAWERS
B15r	BASE CABINET W/ (2) DRAWERS + FALSE FRONT DRAWER
B16	BASE CABINET W/ (4) DRAWER
B25	SINK CABINET WITH (2) DOORS
B31	BASE CABINET - WASTE PULLOUT
SHELVES	
S01	FLOATING SHELF
TALL CABINET	
T03	TALL CABINET W/ (2) DOORS
T09	TALL CABINET W/ DOORS AND APPLIANCE OPENING
UPPER CABINET	
U03	UPPER CABINET W/ (2) DOOR
U04	UPPER CABINET WITH OPEN SHELF

Babcock Design

Salt Lake City
52 Exchange Place
Salt Lake City, UT 84111
801.531.1144

Boise
800 W Main Street, Suite 940
Boise, ID 83702
208.424.7675

babcock**design**.com

Consultant

CITY OF ALPINE

ALPINE FIRE STATION #202

50 E 100 N ALPINE, UT 84004

Revisions

Num.	Description	Date

Project Number	25116
Original Issue	04.16.2026
Project Status	CONSTRUCTION DOCUMENTS

The information and content represented herein is considered to be the architect's instruments of service and are the property of Babcock Design. They are available for limited review and evaluation by clients, consultants, contractors, government agencies, vendors, and office personnel only in accordance with this notice. They are intended for use only for the project specified and are to be used for no other purpose or project including additions to or modification of the completed project. No part thereof may be copied, reproduced, photographed, modified, published, uploaded, transmitted, disclosed, sold, distributed to others in any way including in digital form, or otherwise used without the prior written consent of Babcock Design.

COPYRIGHT © 2025 BABCOCK DESIGN

Stamp

Sheet Title

CASEWORK TYPES

Sheet Number

A641

Current as of: 1/15/2026 9:48:02 PM

Original drawing is 30" x 42" Autodesk Docs://25116 - ALPINE FIRE STATION 202/25116 - Alpine Fire Station 202.rvt

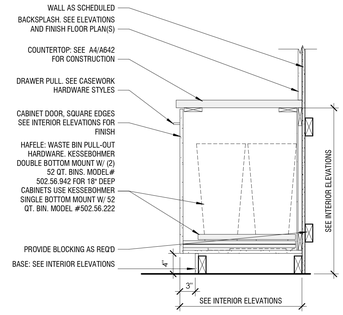

11 | **CASEWORK - BASE UNIT - B31**
1" = 1'-0"

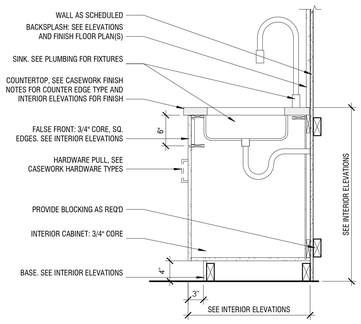

12 | **CASEWORK - BASE UNIT - B24/B25**
1" = 1'-0"

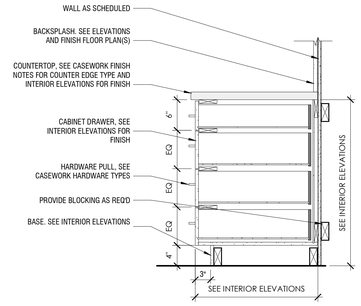

13 | **CASEWORK - BASE UNIT - B16**
1" = 1'-0"

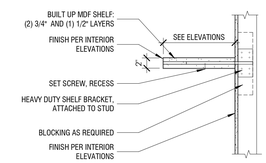

7 | **CASEWORK -FLOATING SHELVES - S01**
1" = 1'-0"

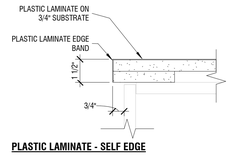

PLASTIC LAMINATE - SELF EDGE

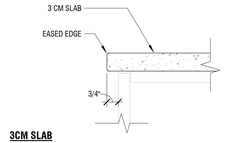

3CM SLAB

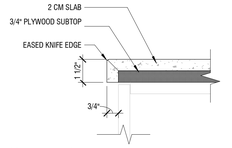

2CM KNIFE EDGE

8 | **COUNTER CONSTRUCTION AND EDGE TYPE**
3" = 1'-0"

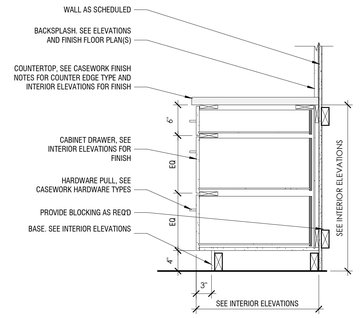

9 | **CASEWORK - BASE UNIT - B15**
1" = 1'-0"

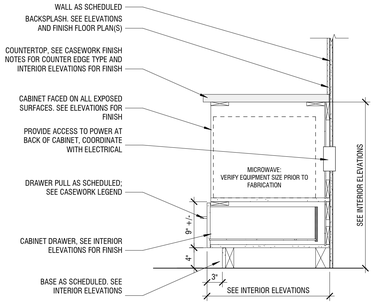

10 | **CASEWORK - BASE UNIT - B07**
1" = 1'-0"

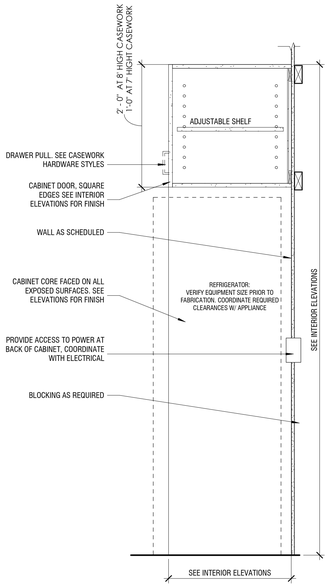

4 | **CASEWORK - TALL UNIT - T06**
1" = 1'-0"

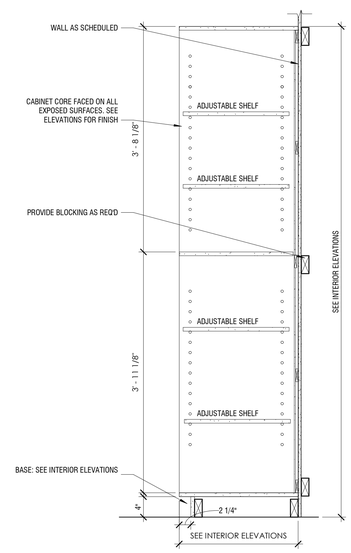

1 | **CASEWORK - TALL UNIT - T01**
1" = 1'-0"

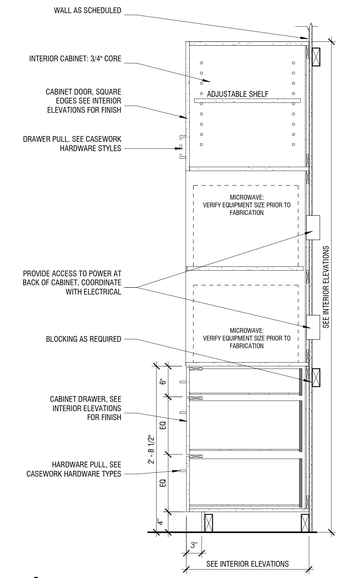

5 | **CASEWORK - TALL UNIT - T09**
1" = 1'-0"

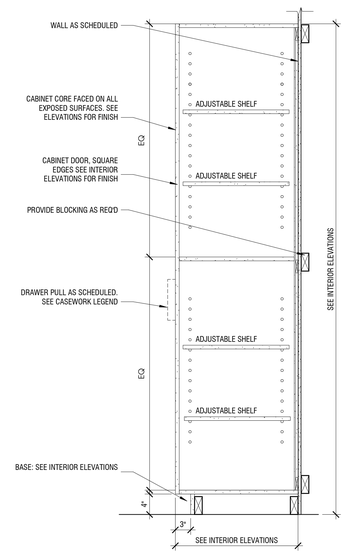

2 | **CASEWORK - TALL UNIT - T02/T03**
1" = 1'-0"

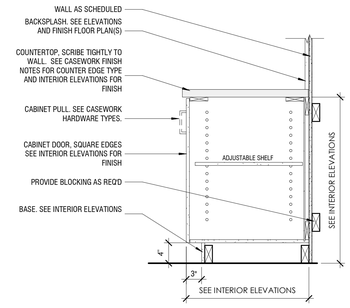

6 | **CASEWORK - BASE UNIT - B02/B03**
1" = 1'-0"

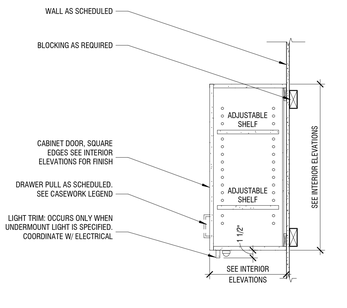

3 | **CASEWORK - UPPER UNIT - U02/U03**
1" = 1'-0"

Babcock Design

Salt Lake City
52 Exchange Place
Salt Lake City, UT 84111
801.531.1144

Boise
800 W Main Street, Suite 940
Boise, ID 83702
208.424.7675

babcock**design**.com

Consultant

CITY OF ALPINE

ALPINE FIRE STATION #202

50 E 100 N ALPINE, UT 84004

Revisions

Num.	Description	Date

Project Number	25116
Original Issue	04.16.2026
Project Status	CONSTRUCTION DOCUMENTS

The information and contnent represented herein is coonsidered by law the architect's instruments of service and are the property of Babcock Design. They are available for limited review and evaluation by clients, consultants, contractors, government agencies, vendors, and office personnel only in accordance with this notice. They are intended for use only for the project specified and are to be used for no other purpose or project including additions to or modification of the completed project. No part thereof may be copied, reproduced, photographed, modified, published, uploaded, transmitted, disclosed, sold, distributed to others in any way including in digital form, or otherwise used without the prior written consent of Babcock Design.

COPYRIGHT © 2025 BABCOCK DESIGN

Stamp

STATE OF UTAH · HENRY B. COTTLE · 136818 · LICENSED ARCHITECT

Sheet Title

INTERIOR CASEWORK TYPICALS

Sheet Number

A642

Original drawing is 30" x 42" Autodesk Docs://25116 - ALPINE FIRE STATION 202/25116 - Alpine Fire Station 202.rvt

Current set: 1/6/2026 9:48:05 PM

MATERIAL AND FINISH SCHEDULE

MATERIAL DIVISION	MARK	DESCRIPTION	MANUFACTURER	PATTERN / STYLE	COLOR	SIZE	SPECIFICATION	COMMENTS
DIVISION 03 - CONCRETE								
DIVISION 03 - CONCRETE	PC-1	POLISHED CONCRETE	SHUR-SEAL PROSOCO	-	-	-	2-STEP POLISH W/50, 100 THEN 1 COAT SHUR-SEAL, THEN 2 COATS OF PROSOCO	2 GRINDS, FINISH LEVEL 1 FLAT - BURNISHED
DIVISION 03 - CONCRETE	SC-1	SEALED CONCRETE	TBD	-	-	-	SINGLE GRIND AND SEAL	FLAT FINISH
DIVISION 04 - MASONRY								
DIVISION 04 - MASONRY	BR-01	RECLAIMED BRICK	N/A	-	EXISTING	EXISTING	RECLAIMED FROM ADJACENT PROPERTY - COORDINATE WITH OWNER	RECLAIMED FROM ADJACENT PROPERTY - COORDINATE WITH OWNER
DIVISION 04 - MASONRY	CMU-01	CMU BLOCK	LEHI BLOCK COMPANY	#28P LT HONED	CHARCOAL-P	8" X 8" X 16" (DIMENSIONAL)	FINISHED WITH SEALER. BASIS OF DESIGN	INTERIOR EXPOSED CMU
DIVISION 04 - MASONRY	CMU-02	CMU BLOCK	TO BE DETERMINED	SPLIT FACED	TO BE SELECTED BY ARCHITECT FROM MANUFACTURER'S FULL RANGE OF COLORS	8" X 8" X 16" (DIMENSIONAL)	-	EXTERIOR GENERATOR AND TRASH ENCLOSURE
DIVISION 04 - MASONRY	M-1	MASONRY VENEER	SEE SPECIFICATIONS	RUNNING BOND	TONES OF RED/BROWN - FINAL COLOR TO BE SELECTED BY ARCHITECT FROM MANUFACTURER'S FULL RANGE OF STANDARD AND CUSTOM COLORS	3-5/8 X 2-1/2 X 8	-	-
DIVISION 04 - MASONRY	M-2	THIN BRICK MASONRY VENEER	SEE SPECIFICATIONS	RUNNING BOND	TONES OF RED/BROWN - FINAL COLOR TO BE SELECTED BY ARCHITECT FROM MANUFACTURER'S FULL RANGE OF STANDARD AND CUSTOM COLORS	9/16 X 2-1/2 X 8	-	-
DIVISION 05 - METALS								
DIVISION 05 - METALS	AL-01	PREFINISHED ALUMINUM FLASHING/FASCIA	BY CONTRACTOR	VARIES - SEE DETAILING	DARK CHARCOAL - FINAL COLOR TO BE SELECTED BY ARCHITECT FROM MANUFACTURERS FULL RANGE OF COLORS	VARIES - SEE DETAILS	-	-
DIVISION 05 - METALS	MP-01	COLD ROLLED STEEL	BY CONTRACTOR	VARIES - SEE DETAILING	BLACK MAGIC PATINA	THICKNESS VARIES, SEE DETAILS	CLEAR SATIN SEALER	-
DIVISION 05 - METALS	MP-02	PERFORATED PANEL	MOZ DESIGNS	PERFORATED 3/16" DIAMETER, ALUMINUM	POWDER BLACK SAND	.063"	-	-
DIVISION 05 - METALS	SR-01	STANDING SEAM ROOF / FASCIA	TBD - SEE SPECIFICATIONS	SEE SPECIFICATIONS	DARK CHARCOAL - FINAL COLOR TO BE SELECTED BY ARCHITECT FROM MANUFACTURERS FULL RANGE OF COLORS	SEE SPECIFICATIONS	SEE SPECIFICATIONS	-
DIVISION 06 - WOOD, PLASTICS, COMPOSITES								
DIVISION 06 - WOOD, PLASTICS, COMPOSITES	FRP-01	FRP WALL PANELS	BY CONTRACTOR	SMOOTH	WHITE	4' x 8'	SEE SPECIFICATION	-
DIVISION 06 - WOOD, PLASTICS, COMPOSITES	PL-01	PLASTIC LAMINATE	PIONITE	WW120WE	A GOOD BOOK	VARIES - SEE DETAILS	INSTALL WITH VERTICAL GRAIN DIRECTION, EDGE BANDING TO MATCH	-
DIVISION 06 - WOOD, PLASTICS, COMPOSITES	PL-02	PLASTIC LAMINATE	WILSONART	FAIRCHILD 8238	K-05 TIMBERGRAIN	VARIES - SEE DETAILS	INSTALL WITH VERTICAL GRAIN DIRECTION, EDGE BANDING TO MATCH	-
DIVISION 06 - WOOD, PLASTICS, COMPOSITES	PL-03	PLASTIC LAMINATE	WILSONART	LOFT OAK 7968	K-12 SOFT GRAIN	VARIES - SEE DETAILS	INSTALL WITH VERTICAL GRAIN DIRECTION, EDGE BANDING TO MATCH	-
DIVISION 06 - WOOD, PLASTICS, COMPOSITES	PL-04	PLASTIC LAMINATE	FORMICA FENIX	J0748	BEIGE ARIZONA	VARIES - SEE DETAILS	TRACELESS, EDGE BANDING TO MATCH	-
DIVISION 06 - WOOD, PLASTICS, COMPOSITES	WD-01	INTERIOR WOOD SIDING	DELTA MILLWORKS	WESTERN RED CEDAR- STK GRADE	SSB-KODIAK	1 x 4	INSTALL TONGUE & GROOVE	-
DIVISION 06 - WOOD, PLASTICS, COMPOSITES	WD-03	WOOD DOORS	OREGON DOOR	RIFT CUT WHITE OAK, UNFINISHED	CUSTOM-TO MATCH ARCHITECT'S SAMPLE	VARIES - SEE DOOR SCHEDULE	SEE DOOR SCHEDULE AND SPECIFICATIONS	-
DIVISION 07 - THERMAL AND MOISTURE PROTECTION								
DIVISION 07 - THERMAL AND MOISTURE PROTECTION	AR-01	ASPHALT ROOF SHINGLES	TBD	SEE SPECIFICATIONS	DARK CHARCOAL/LIGHT GRAY - FINAL COLOR TO BE SELECTED BY ARCHITECT FROM MANUFACTURERS FULL RANGE OF COLORS	SEE SPECIFICATIONS	SEE SPECIFICATIONS	-
DIVISION 07 - THERMAL AND MOISTURE PROTECTION	E-01	PRIMARY EIFS COLOR	TBD	MATCH EXISTING	MATCH EXISTING	-	-	-
DIVISION 07 - THERMAL AND MOISTURE PROTECTION	FC-01	RIBER CEMENT BOARD PANEL	NICHIHA	VINTAGEWOOD PANEL SERIES	CEDAR	SEE SPECIFICATIONS	SEE SPECIFICATIONS	-
DIVISION 08 - OPENINGS								
DIVISION 08 - OPENINGS	GL-2	1" INSULATED GLASS - TINTED	-	1" INSULATED GLASS	GRAY TINT - FINAL SAMPLE TO BE APPROVED BY ARCHITECT	VARIES - SEE SCHEDULES	-	-
DIVISION 08 - OPENINGS	GL-2T	1" INSULATED GLASS - TINTED & TEMPERED	-	1" INSULATED GLASS	GRAY TINT - FINAL SAMPLE TO BE APPROVED BY ARCHITECT	VARIES - SEE SCHEDULES	-	-
DIVISION 08 - OPENINGS	GL-4T	1/4" CLEAR GLASS - TEMPERED	-	1/4" CLEAR GLASS	CLEAR	VARIES - SEE SCHEDULES	-	-
DIVISION 09 - FINISHES - CEILINGS								
DIVISION 09 - FINISHES - CEILINGS	ACT-1	ACOUSTIC CEILING TILE	ARMSTRONG	ULTIMA BEVELED #1902	WHITE	24 x 24 x 1	PAIR WITH ARMSTRONG 9/16" SUPRAFINE EXPOSED TEE-WHITE	-
DIVISION 09 - FINISHES - CEILINGS	GB-1	PAINTED GYP BOARD CEILING	SHERWIN WILLIAMS	SW 7008, FLAT FINISH	ALABASTER	-	X3 COATS, USE ANTI-MILDEW ADDITIVE IN WET AREAS.	-
DIVISION 09 - FINISHES - CEILINGS	OTS	OPEN TO STRUCTURE (NO PAINT)	-	-	-	-	-	-
DIVISION 09 - FINISHES - CEILINGS	OTS-P	OPEN TO STRUCTURE (PAINT)	SHERWIN WILLIAMS	SW 7008, FLAT FINISH	ALABASTER	-	X3 COATS, USE ANTI-MILDEW ADDITIVE IN WET AREAS.	-
DIVISION 09 - FINISHES - CEILINGS	OTS-P2	OPEN TO STRUCTURE (PAINT)	SHERWIN WILLIAMS	SW 7069, FLAT FINISH	IRON ORE	-	X3 COATS, USE ANTI-MILDEW ADDITIVE IN WET AREAS.	-
DIVISION 09 - FINISHES - FLOORING								
DIVISION 09 - FINISHES - FLOORING	CPT-01	CARPET TILE	MOHAWK GROUP	WILD HORIZONS GT 366	867 BROOMSEDGE	12" x 36"	INSTALL PATTERN: HALF LAP. DIRECT GLUE PER MANUFACTURERS RECOMMENDATION. CONTACT STACEY JARDINE	-
DIVISION 09 - FINISHES - FLOORING	CPT-02	CARPET TILE	MOHAWK GROUP	CHROMATIC CADENCE	989 ROUND MIDNIGHT	24" x 24"	INSTALL PATTERN: MONOLITHIC. DIRECT GLUE. PER MANUFACTURERS RECOMMENDATION	THIS COLOR; 50% OF OVERALL QUANTITY. RANDOM INSTALL. COORDINATE WITH DESIGNER.
DIVISION 09 - FINISHES - FLOORING	CPT-03	CARPET TILE	MOHAWK GROUP	CHROMATIC CADENCE	958 STONE CRAZY	24" x 24"	INSTALL PATTERN: MONOLITHIC. DIRECT GLUE. PER MANUFACTURERS RECOMMENDATION	THIS COLOR, 50% OF OVERALL QUANTITY. RANDOM INSTALL. COORDINATE WITH DESIGNER.
DIVISION 09 - FINISHES - FLOORING	CPT-04	WALK OFF CARPET TILE	MOHAWK GROUP	STEP UP II GT311	983 IRON ORE	24" x 24"	INSTALL PATTERN: MONOLITHIC, PER MANUFACTURERS RECOMMENATION	-
DIVISION 09 - FINISHES - FLOORING	PT-01	PORCELAIN TILE	CROSSVILLE STUDIOS	FEEL	PEARL	12" x 24"	INSTALL PATTERN: HORIZONTAL STACK, PARALLEL TO DOOR FRAME. INSTALL PER MANUFACTURERS RECOMMENDATIONS AND TCNA RECOMMENDATIONS. GROUT: CUSTOM #543 DRIFTWOOD, EPOXY.	-
DIVISION 09 - FINISHES - FLOORING	RF-01	RUBBER FLOORING TILE	ECORE ATHLETIC	COMPACT-FLEX	BLACK	3'-3.4" x 3'-3.4" TILE	INSTALL PATTERN: MONOLITHIC. INSTALL PER MANUFACUTURERS RECOMMENDATION.	-
DIVISION 09 - FINISHES - PAINT								
DIVISION 09 - FINISHES - PAINT	P-01	PAINT	SHERWIN WILLIAMS	SW 7008, EGSHELL FINISH	ALABASTER	-	X3 COATS, USE ANTI-MILDEW ADDITIVE IN WET AREAS.	-
DIVISION 09 - FINISHES - PAINT	P-02	PAINT	SHERWIN WILLIAMS	SW 7069, EGSHELL FINISH	IRON ORE	-	X3 COATS, USE ANTI-MILDEW ADDITIVE IN WET AREAS.	-
DIVISION 09 - FINISHES - PAINT	P-03	PAINT	SHERWIN WILLIAMS	SW 7016, EGSHELL FINISH	MINDFUL GRAY	-	X3 COATS, USE ANTI-MILDEW ADDITIVE IN WET AREAS.	-
DIVISION 09 - FINISHES - PAINT	P-04	HM DOOR PANEL	SHERWIN WILLIAMS	SW 7069, EGSHELL FINISH	IRON ORE	-	-	-
DIVISION 09 - FINISHES - PAINT	P-05	HM DOOR FRAME	SHERWIN WILLIAMS	SW 7069, SEMI-GLOSS FINISH	IRON ORE	-	-	-
DIVISION 09 - FINISHES - PAINT	P-06	HM DOOR FRAME	SHERWIN WILLIAMS	SW7008, SEMI-GLOSS FINISH	ALABASTER	-	-	-
DIVISION 09 - FINISHES - PAINT	P-07	EXTERIOR PAINT	SHERWIN WILLIAMS	COLOR TO BE SELECTED BY ARCHITECT	COLOR TO BE SELECTED BY ARCHITECT	-	-	EXTERIOR METALS (BOLLARDS, HANDICAP SIGNAGE)
DIVISION 09 - FINISHES - TRIM								
DIVISION 09 - FINISHES - TRIM	TR-01	TOP EDGE PROTECTION	SCHLUTER	JOLLY	SATIN NICKEL	-	-	
DIVISION 09 - FINISHES - TRIM	TS-01	TRANSITION STRIP	SCHLUTER	RENO-U	SATIN NICKEL	-	-	
DIVISION 09 - FINISHES - WALL BASE								
DIVISION 09 - FINISHES - WALL BASE	RB-01	RUBBER BASE	ROPPE	4" STANDARD WITH TOE 4" STANDARD WITH TOE	100 BLACK	4"	-	-
DIVISION 09 - FINISHES - WALL BASE	RB-02	RUBBER BASE	ROPPE	4" STRAIGHT, NO TOE	672 ASHEN	4"	-	-
DIVISION 09 - FINISHES - WALL COVERING								
DIVISION 09 - FINISHES - WALL COVERING	WC-01	WALL COVERING	WOLF GORDON	RAMPART RESOLVE- REPOSE GOH 35188209	OYSTER	52"	REVERSE HANG, RANDOM MATCH. INSTALL PER MANUFACTURERS RECOMMENDATION.	COMMUNITY ROOM BACK OF HOUSE
DIVISION 09 - FINISHES - WALL TILE								
DIVISION 09 - FINISHES - WALL TILE	WT-01	PORCELAIN TILE	CROSSVILLE STUDIOS	FEEL-STRIPES	PEARL	12" x 24"	INSTALL PATTERN: HORIZONTAL STACK-SEE INTERIOR ELEVATIONS. INSTALL PER MANUFACTURERS RECOMMENDATIONS AND TCNA RECOMMENDATIONS. GROUT: CUSTOM #543 DRIFTWOOD, EPOXY.	-
DIVISION 09 - FINISHES - WALL TILE	WT-02	GLAZED CERAMIC TILE	DAL TILE	COLOWHEEL LINEAR	MATTE ARTIC WHITE 0790	4" x 12"	INSTALL PATTERN: HORIZONTAL STACK-SEE INTERIOR ELEVATIONS. INSTALL PER MANUFACTURERS RECOMMENDATIONS AND TCNA RECOMMENDATIONS. GROUT: CUSTOM #543 DRIFTWOOD, EPOXY.	-
DIVISION 12 - FURNISHINGS								
DIVISION 12 - FURNISHINGS	CG-01	CORNERGUARDS	PAINTABLE W/ 3/4" TABS	SMOOTH	PAINTED ON SITE	12' CUT TO 9'	-	-
DIVISION 12 - FURNISHINGS	QT-01	QUARTZ COUNTERTOP	CAESARSTONE	4001	FRESH CONCRETE	2CM	FINISH: HONED, EASED SQUARE EDGE. INSTALL PER MANUFACTURERS RECOMMENDATION. CONTRACTOR TO PROVIDE SEAMING DIAGRAM FOR APPROVAL	-
DIVISION 12 - FURNISHINGS	QT-02	QUARTZ COUNTERTOP	CAESARSTONE	4011	CLOUDBURST CONCRETE, MINERAL	2CM	FINISH: HONED. EASED SQUARE EDGE. INSTALL PER MANUFACTURERS RECOMMENDATION. CONTRACTOR TO PROVIDE SEAMING DIAGRAM FOR APPROVAL	-

Babcock Design
Salt Lake City
52 Exchange Place
Salt Lake City, UT 84111
801.531.1144
Boise
800 W Main Street, Suite 940
Boise, ID 83702
208.424.7675
babcockdesign.com

Consultant

CITY OF ALPINE

ALPINE FIRE STATION #202

50 E 100 N ALPINE, UT 84004

Revisions

Num.	Description	Date

Project Number 25116
Original Issue 04.16.2026
Project Status CONSTRUCTION DOCUMENTS

The information and content represented herein is considered by law the architect's instruments of service and are the property of Babcock Design. They are available for limited review and evaluation by clients, consultants, contractors, government agencies, vendors, and office personnel only in accordance with this notice. They are intended for use only for the project specified and are to be used for no other purpose or project including additions to or modification of the completed project. No part thereof may be copied, reproduced, photographed, modified, published, uploaded, transmitted, disclosed, sold, distributed to others in any way including in digital form, or otherwise used without the prior written consent of Babcock Design.
COPYRIGHT © 2025 BABCOCK DESIGN

Stamp

STATE OF UTAH
ROBERT B. COTTLE
136818
LICENSED ARCHITECT

Sheet Title

MATERIAL AND FINISH SCHEDULES

Sheet Number

A651

ROOM SIGNAGE SCHEDULE					
ROOM NUMBER	ROOM NAME	DESIGNATION	DESCRIPTION	SIGN MOUNTING	COMMENTS
LEVEL 1					
124	DECON	ST01	ROOM IDENTIFICATION	WALL - FLAT	
125	TURNOUT	ST01	ROOM IDENTIFICATION	WALL - FLAT	
126	TOOL ROOM / SCBA	ST01	ROOM IDENTIFICATION	WALL - FLAT	
130	COMMUNITY ROOM	ST15	MAXIMUM ROOM OCCUPANCY	WALL - FLAT	131 OCCUPANTS
132	JANITOR	ST01	ROOM IDENTIFICATION	WALL - FLAT	
135	KITCHEN	ST01	ROOM IDENTIFICATION	WALL - FLAT	
136	STORAGE	ST01	ROOM IDENTIFICATION	WALL - FLAT	

BUILDING SIGNAGE SCHEDULE			
DESIGNATION	DESCRIPTION	SIGN MOUNTING	COMMENTS
ST03	SINGLE OCCUPANT RESTROOM	Wall - Flat	
ST05	EXIT	Wall - Flat	
ST07	FIRE RISER ROOM SIGN	Wall - Flat	
ST08	MECH ROOM	Wall - Flat	
ST16	NO ENTRY SIGN WITH PICTOGRAM	Wall - Flat	

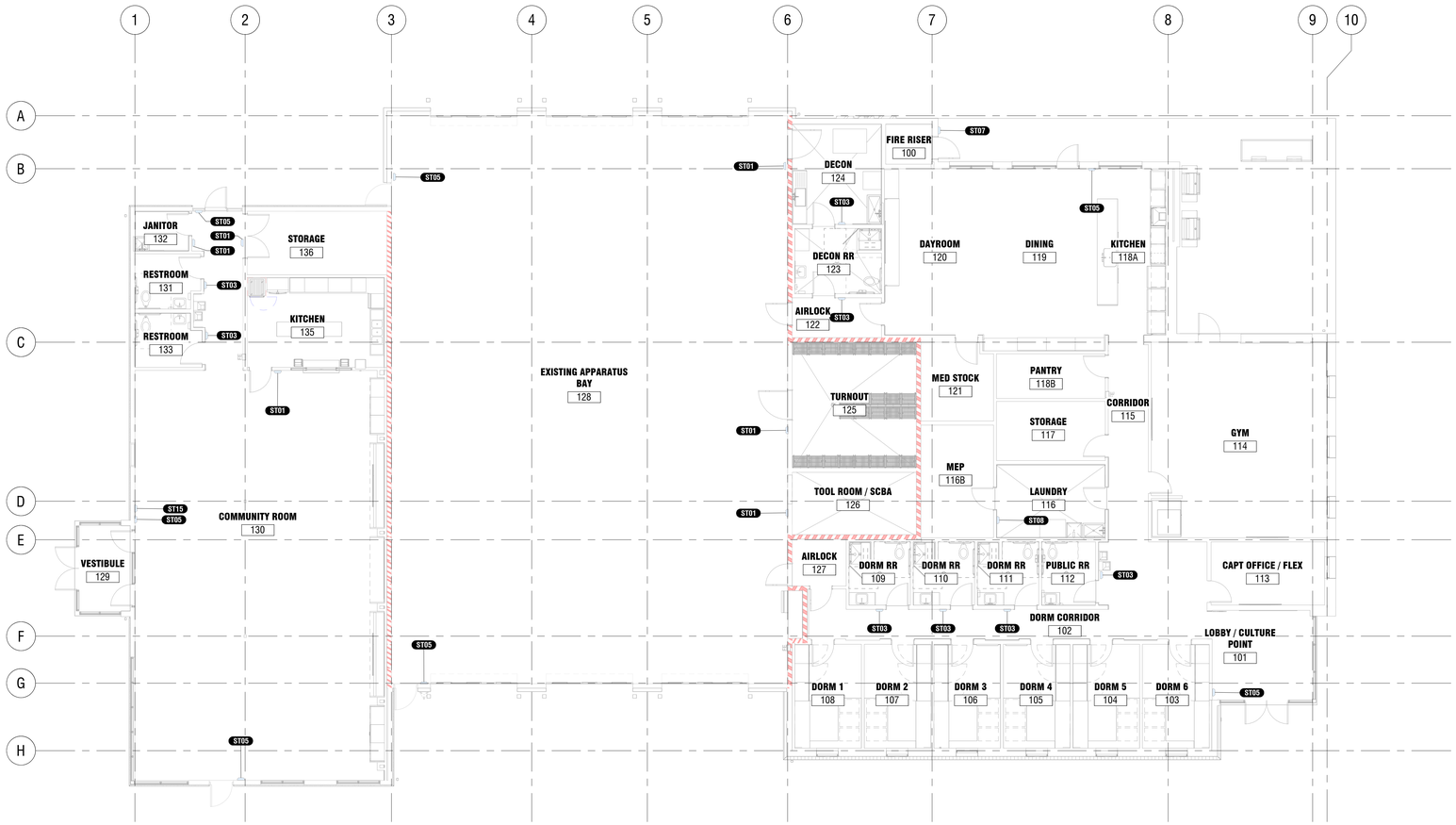

19 LEVEL 1 - SIGNAGE PLAN
1/8" = 1'-0"

Babcock Design

Salt Lake City
52 Exchange Place
Salt Lake City, UT 84111
801.531.1144

Boise
800 W Main Street, Suite 940
Boise, ID 83702
208.424.7675

babcockdesign.com

Consultant

CITY OF ALPINE

ALPINE FIRE STATION #202

50 E 100 N ALPINE, UT 84004

Revisions

Num.	Description	Date

Project Number	25116
Original Issue	04.16.2026
Project Status	CONSTRUCTION DOCUMENTS

The information and content represented herein is considered by law the architect's instruments of service and are the property of Babcock Design. They are available for limited review and evaluation by clients, consultants, contractors, government agencies, vendors, and office personnel only in accordance with this notice. They are intended for use only for the project specified and are to be used for no other purpose or project including additions to or modification of the completed project. No part thereof may be copied, reproduced, photographed, modified, published, uploaded, transmitted, disclosed, sold, distributed to others in any way including in digital form, or otherwise used without the prior written consent of Babcock Design.

COPYRIGHT © 2025 BABCOCK DESIGN

Stamp

Sheet Title

INTERIOR SIGNAGE PLAN SCHEDULES

Sheet Number

A661

Current as of: 4/16/2026 8:48:15 PM

Original drawing is 30" x 42" Autodesk Docs://25116 - ALPINE FIRE STATION 202/25116 - Alpine Fire Station 202.rvt

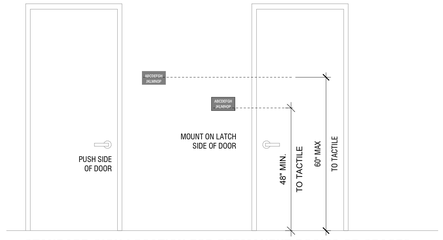

STANDARD SIGN LOCATION FOR PERMANENT ROOMS OR SPACES

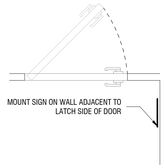

WHEN MOUNTING SPACE IS NOT AVAILABLE

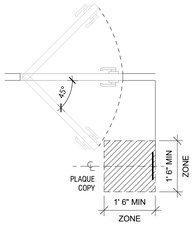

AT DOORS OPENING OUTWARD INTO PATH OF TRAVEL

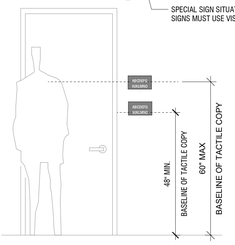

SPECIAL SIGN SITUATIONS

SEPARATE VISUAL CHARACTERS AND RAISED CHARACTERS ON SINGLE SIGN

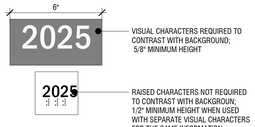

SEPARATE VISUAL CHARACTERS AND RAISED CHARACTERS ON SINGLE SIGN

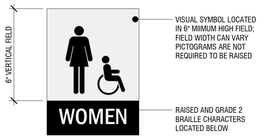

PICTOGRAM REQUIREMENTS

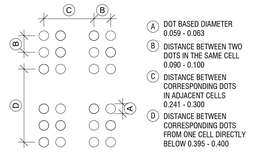

BRAILLE GRADE 2 MEASUREMENTS

C2 TYPICAL SIGNAGE DETAILS

3" = 1'-0"

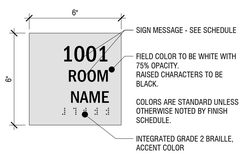

TYPE 1 - ROOM INDENTIFICATION
PROVIDE WHERE INDICATED

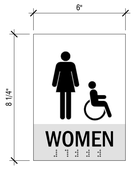

TYPE 2w - WOMEN ADA RESTROOM
PROVIDE WHERE INDICATED

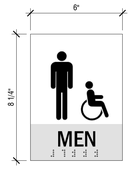

TYPE 2m - MEN ADA RESTROOM
PROVIDE WHERE INDICATED

TYPE 3 - SINGLE OCC.
PROVIDE WHERE INDICATED

TYPE 4 - FAMILY/ASSISTED RESTROOM
PROVIDE WHERE INDICATED

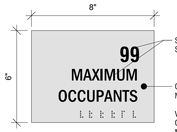

TYPE 15 - OCCUPANCY
PROVIDE WHERE INDICATED

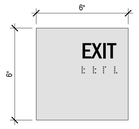

TYPE 5 - EXIT
PROVIDE WHERE INDICATED

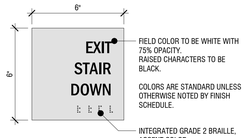

TYPE 6 - EXIT STAIR DOWN
PROVIDE WHERE INDICATED

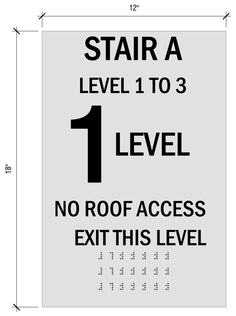

TYPE 9 - EXIT STAIR EXIT THIS LEVEL
PROVIDE AT INTERIOR OF STAIRWELL AT EACH STAIR ON LEVEL 1

TYPE 10 - EXIT STAIR EXIT LEVEL 1
PROVIDE AT INTERIOR OF STAIRWELL AT EACH STAIR ON EACH LEVEL EXCEPT LEVEL 1

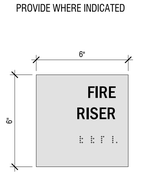

TYPE 7 - FIRE RISER
PROVIDE WHERE INDICATED

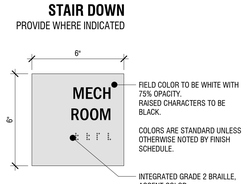

TYPE 8 - MECHANICAL ROOM
PROVIDE WHERE INDICATED

TYPE 13 - PERMANENT ROOMS & SPACES
PROVIDE WHERE INDICATED

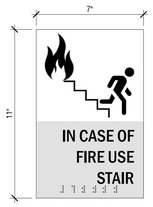

TYPE 11 - IN CASE OF FIRE USE STAIRS
PROVIDE ONE SIGN PER LEVEL ADJACENT TO ELEVATOR BANK EXCEPT LEVEL 1

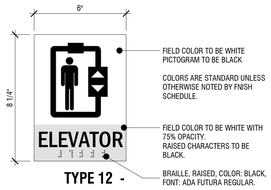

TYPE 12 - ELEVATOR
PROVIDE WHERE INDICATED

TYPE 14 - VINYL SIGN TYPE
PROVIDE WHERE INDICATED

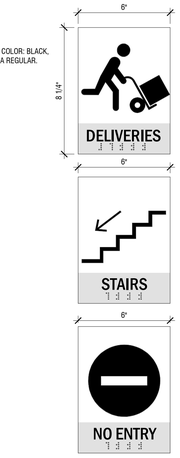

TYPE 16 -PICTOGRAM OPTION FOR PERMANENT ROOMS & SPACES
PROVIDE WHERE INDICATED

D5 TYPICAL SIGNAGE TYPES

3" = 1'-0"

Babcock Design

Salt Lake City
52 Exchange Place
Salt Lake City, UT 84111
801.531.1144

Boise
800 W Main Street, Suite 940
Boise, ID 83702
208.424.7675

babcock**design**.com

Consultant

CITY OF ALPINE

ALPINE FIRE STATION #202

50 E 100 N ALPINE, UT 84004

Revisions

Num.	Description	Date

Project Number	25116
Original Issue	04.16.2026
Project Status	CONSTRUCTION DOCUMENTS

The information and content represented herein is considered by law the architect's instruments of service and is protected by copyright. They are not to be changed or copied in any form or manner whatsoever by consultants, contractors, government agencies, vendors, and office personnel only in accordance with this notice. They are intended for use only for the project specified and are to be used for no other purpose or project including additions to or modification of the completed project. No part thereof may be copied, reproduced, photographed, modified, published, uploaded, transmitted, disclosed, sold, distributed to others in any way including in digital form, or otherwise used without the prior written consent of Babcock Design.

COPYRIGHT © 2025 BABCOCK DESIGN

Stamp

STATE OF UTAH · ROBERT B. COTTLE · 136818 · LICENSED ARCHITECT

Sheet Title

INTERIOR SIGNAGE PLAN SCHEDULES

Sheet Number

A662

Current at: 4/15/2026 9:48:19 PM

Original drawing is 30" x 42" Autodesk Docs://25116 - ALPINE FIRE STATION 202/25116 - Alpine Fire Station 202.rvt

GENERAL

1. The structural notes are intended to complement the project specifications. Specific notes and details in the drawings shall govern over the structural notes and typical details.
2. Typical details and sections shall apply where specific details are not shown.
3. The contractor shall verify all site conditions and dimensions. If actual conditions differ from those shown in the contract drawings, the contractor shall immediately notify the architect or Dunn Associates, Inc (DAI) before proceeding with the fabrication or construction of any affected elements. Discrepancies should be brought the attention of the architect prior to fabrication or construction.
4. Drawings shall not be scaled for the purpose of preparing shop drawings or for construction. Where dimensions on the design drawings are not provided or inferred, the contractor may scale drawings only to estimate member lengths for the purpose of bidding.
5. Changes to these contract drawings may be made only by an authorized representative of DAI. DAI shall not be held responsible or liable for any claims arising directly or indirectly from changes made without written authorization by an authorized representative of DAI.
6. Omissions or conflicts between the contract drawings and/or specifications shall be brought to the attention of the architect/DAI before proceeding with any work involved. In case of conflict, follow the most stringent requirement as directed by the architect/DAI at no additional cost to the owner.
7. The contractor shall submit a written request to the architect/DAI before proceeding with any changes, substitutions, or modifications. Any work done by the contractor before receiving written approval will be at the contractor's risk. These contract documents note and describe potential bid alternate details that may be requested from and approved by DAI during the bidding and negotiation phase. The contractor may also submit to the architect/DAI for approval other substitutions or modifications to the design drawings as bid alternates during the bidding and negotiation phase. Any contractor proposed substitutions/modifications to the design drawings after project award shall be submitted in writing to the architect/DAI for review, together with any additional costs projected from the proposed substitution/modification. Field modifications to structural elements are not permitted without notification and approval by DAI.
8. The contractor shall coordinate with all trades any items that are to be integrated into the structural system such as openings, penetrations, mechanical and electrical equipment, etc. Structural drawings do not show all openings. Refer to other discipline drawings. Sizes and locations of mechanical and other equipment that differs from those shown on the contract drawings shall be reported to the architect/DAI. Contractor shall take measures as required to insure that construction loads shall not exceed design loads for the structure.
9. Any structural items shown on other discipline's drawings that are not shown on the structural drawings, but that are noted as "refer to structural drawings" for additional information, shall be brought to the attention of DAI by the contractor.
10. Items such as fireproofing, waterproofing, insulation, vapor barrier, etc, may be shown or noted on structural drawings for reference only. Refer to the architectural drawings or specifications for more information.
11. The contractor shall be responsible for means, methods, techniques, sequences, and procedures in order to comply with the contract drawings and specifications. The contractor shall provide adequate shoring and bracing as required for the chosen method of erection. Shoring and bracing shall remain in place until final connections for the permanent members are completed. The building shall not be considered stable until all connections are completed. Walls shall not be considered self-supporting and shall be braced until the floor/roof system is completed.
12. Site observations by a field representative of DAI. shall not be construed as approval of construction, the procedures, nor special inspection.
13. All work shall be done in accordance with OSHA requirements. Potential conflicts between these documents and OSHA requirements shall be brought to the attention of DAI before proceeding with the work.
14. Shop Drawings and submittals:
   A. Shop drawings include plans, details, calculations and/or other relevant design information. Review of shop drawings and submittals by DAI is for general compliance only and is not intended for approval. The shop drawing review shall not relieve the contractor from the responsibility of completing the project according to the contract documents.
   B. Submittals for the following items shall be submitted to the project architect/DAI for review prior to fabrication and/or installation:
      1. Concrete Mix Design
      2. Concrete Reinforcing
      3. Masonry Block and Grout
      4. Masonry Reinforcing
      5. Anchorage and Embeds
      6. Engineered Wood Joists, Beams, etc.
      7. Panelized Wood Framing, if used
      8. Deferred Design Items
   C. Quality control submittals shall be submitted to special inspector for review prior to fabrication/installation. Courtesy copies shall be provided to the project architect and DAI for their records.
   D. Detailing and shop drawing production for structural elements will require information (including dimensions) contained in the architectural, structural and/or other consultants' drawings. The structural drawings shall be used in conjunction with the architectural and other consultant's drawings. See the Architectural Drawings for dimensions, doors, windows, non-bearing interior and exterior walls, elevations, slopes, stairs, curbs, drains, recesses, depressions, railings, waterproofing, finishes, chamfers, kerfs, etc.
   E. Shop drawings made from reproductions of the structural drawings will be rejected unless the contractor signs a release agreement prior to the shop drawings being reviewed. The contractor may also obtain electronic files of the plan sheets after signing a release agreement. Electronic files of the detail sheets and schedule sheets will not be made available.
   F. The Contractor may choose to submit shop drawings and submittals for review electronically.

BASIS OF DESIGN

1. Governing Building Code------------------------------------ International Building Code 2021,
   International Existing Building Code 2021 (Alteration - Level 3/Additions)
2. Risk Category------------------------------------ IV
3. Roof Live Load (Not concurrent with Roof Snow Load)--------- 20 psf or 300 lbs
4. Rainfall Intensity & Load
   A. Primary Drainage Design (60-min/100 yr storm)----------- 1.76 in/hr
   B. Secondary Drainage Design (15-min/100 yr storm)------- 1.06 in/hr
   C. Rain Load------------------------------------ 21psf (2" static+2" dynamic = 4" total head), to be confirmed with MEP
5. Roof Snow Load Criteria (Drift loads are shown on plan)
   A. Ground Snow Load------------------------------------ P_g = 40 psf
   B. Flat Roof Snow Load------------------------------------ P_f = 34 psf
   C. Snow Exposure Factor------------------------------------ C_e = 1.0
   D. Thermal Factor------------------------------------ C_t = 1.0
   E. Slope Factor------------------------------------ C_s = 1.0
   F. Snow Load Importance Factor------------------------------------ I_s = 1.2
6. Wind Design Criteria
   A. Basic Wind Design Speed------------------------------------ V = 113 mph (Vasd = 0.78V)
   B. Wind Speed, 10-year MRI------------------------------------ 74 mph
   C. Wind Directionality Factor------------------------------------ K_d = 0.85
   D. Wind Exposure------------------------------------ C
   E. Topographic Factor------------------------------------ K_{zt} = 1.0
   F. Ground Elevation Factor------------------------------------ K_e = 0.84
   G. Internal Pressure Coefficient------------------------------------ ± 0.18
   H. Components and Cladding------------------------------------ See note 11 below
7. Seismic Design Criteria
   A. Mapped Spectral Response Accelerations
      1. 0.2-Second (Short) Period Acceleration---------------- S_S = 1.376
      2. 1-Second Acceleration------------------------------------ S_1 = 0.515
   B. Design Spectral Response Accelerations
      1. 0.2-Second (Short) Period Acceleration----------------- S_{DS} = 0.917
      2. 1-Second Acceleration------------------------------------ S_{D1} = 0.613
   C. Site Class (Soil Profile)------------------------------------ D (with data)
   D. Seismic Importance Factor------------------------------------ I_e = 1.5
   E. Seismic Design Category------------------------------------ D
   F. Lateral Force Resisting System(s)---------------------------- Special Reinforced Masonry Shear Walls (Existing/Addition) / Wood Shear Walls (Existing)
      1. Response Modification Coefficient----------------------- R = 5 / 6.5
      2. System Overstrength Factor------------------------------ Ω_o = 2.5 / 2.5
      3. Deflection Amplification Factor--------------------------- C_d = 3.5 / 4
      4. Design Base Shear------------------------------------ V = C_s*W = 0.275W / 0.212W, where W is structural weight
   G. Analysis Procedure------------------------------------ Equivalent Lateral Force
8. Serviceability Criteria
   A. Deflection Limits, unless noted otherwise in GSN--------- Total---------------- Live/Snow/Wind
      1. Roofs------------------------------------ L/240--------------- L/360
      2. Perimeter Roof Framing------------------------------------ ____--------------- L/600(3/8" max)
      3. Walls------------------------------------ ____--------------- L/240(1" max)
   B. Interstory Drift ('h' is story height)---------------------------- Elastic (Wind): h/400 or 3/8"max based on 10-year MRI wind speed
      Inelastic (Seismic): See table below

Seismic Interstory Drift

Level--------------Floor-to-Floor Height-------Inelastic Story Drift-------Inelastic Drift Ratio
Addition-------------------18.83'----------------------1.58"-------------------------0.007
Community Center------13.00'----------------------1.56"-------------------------0.01
Fire Apparatus-----------29.08'----------------------2.44"-------------------------0.007

11. Wind Loads on Components and Cladding based on ASCE 7 Chapter 30, parts 1 -5 are shown below at service level (0.6W). Dimension 'a' = 5.6 feet. For overhangs, parapets, rooftop equipment, bins, silos, tanks and solar panels, designer to use parts 6-7 with qh = 26.9 psf (0.6W).

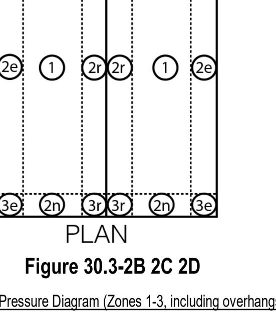

Figure 30.3-2B 2C 2D

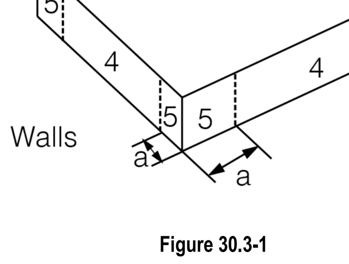

Figure 30.3-1

Roof Pressure Diagram (Zones 1-3, including overhangs 'OH' where applicable) and Wall Pressure Diagram (Zones 4-5)

Wind Pressure Summary for C&C Zones based Upon Areas Ch 30 Pt 1-5 (Table 1 of 2)
All wind pressures include a load factor of 0.6

Zone	Figure	A <= 2.00 ft² psf	A = 10.00 ft² psf	A = 20.00 ft² psf	A = 50.00 ft² psf
1	F:30.3-2B	10.41 -25.78	9.60 -25.78	9.60 -25.78	9.60 -15.68
2e	F:30.3-2B	10.41 -25.78	9.60 -25.78	9.60 -25.78	9.60 -15.68
2n	F:30.3-2B	10.41 -37.61	9.60 -37.61	9.60 -32.51	9.60 -25.78
2r	F:30.3-2B	10.41 -37.61	9.60 -37.61	9.60 -32.51	9.60 -25.78
3e	F:30.3-2B	10.41 -37.61	9.60 -37.61	9.60 -32.51	9.60 -25.78
3r	F:30.3-2B	10.41 -44.70	9.60 -44.70	9.60 -38.30	9.60 -29.82
4	F:30.3-1*	12.77 -13.84	12.77 -13.84	12.21 -13.27	11.46 -12.52
5	F:30.3-1*	12.77 -17.03	12.77 -17.03	12.21 -15.90	11.46 -14.40

Wind Pressure Summary for C&C Zones based Upon Areas Ch 30 Pt 1-5 (Table 2 of 2)
All wind pressures include a load factor of 0.6

Zone	Figure	A = 100.00 ft² psf	A = 200.00 ft² psf	A = 250.00 ft² psf	A = 500.00 ft² psf
1	F:30.3-2B	9.60 -9.60	9.60 -9.60	9.60 -9.60	9.60 -9.60
2e	F:30.3-2B	9.60 -9.60	9.60 -9.60	9.60 -9.60	9.60 -9.60
2n	F:30.3-2B	9.60 -20.69	9.60 -15.59	9.60 -13.96	9.60 -13.96
2r	F:30.3-2B	9.60 -20.69	9.60 -15.59	9.60 -13.96	9.60 -13.96
3e	F:30.3-2B	9.60 -20.69	9.60 -15.59	9.60 -13.96	9.60 -13.96
3r	F:30.3-2B	9.60 -23.42	9.60 -23.42	9.60 -23.42	9.60 -23.42
4	F:30.3-1*	10.89 -11.96	10.33 -11.39	10.15 -11.21	9.60 -10.64
5	F:30.3-1*	10.89 -13.27	10.33 -12.14	10.15 -11.78	9.60 -10.64

EXTERIOR FAÇADE FRAMING AND CLADDING

1. All systems (including façade, cladding, components, elements and/or their attachments to the structure) intended for use to enclose the building shall comply with the following criteria for interstory drift as required by ASCE 7 Chapter 13 and as modified or supplemented herein. See Basis of Design section of the General Structural notes for wind loads, deflection limits, and horizontal (story) drift limits.
   A. Systems shall be detailed to accommodate vertical building movement (live load deflection) in conjunction with interstory drift. Interstory drifts should be considered equal in both orthogonal building directions unless noted otherwise.
   B. Systems shall be designed and detailed for elastic (wind) interstory drift such that all systems shall remain intact, undamaged and all sealant joints integral to or placed between systems shall remain intact, uncompromised, without failures or breaches. Joints, jointing and/or joinery shall be designed such that sealant materials flex, compress and/or shear within limits recommended by the sealant manufacturers so as to remain an effective barrier for water and air infiltration.
   C. Systems shall be designed and detailed for inelastic (seismic) interstory drift such that no failure or distress occurs to systems except joint sealant is allowed to fail. Under no circumstances shall elements and/or components come in contract with adjacent systems, elements and/or components. Systems with glazing are intended to keep all members and glazing intact and connected to the building. Glazing shall not become dislodged from its restraints. Gaskets may fail and may dislodge but shall not let glass escape its restraint.
   D. Systems shall not apply moments to the slab edges and shall not induce lateral loads into beams unless kicker bracing is supplied. Attachments shall not induce torsional loads into beams and columns, nor loads into braces that are part of the Main Seismic Force Resisting System.
   E. Allowance shall be made for sealant to occupy some finite space when compressed beyond its working limit (suggest ±15% of its static joint width).
2. All systems shall be coordinated to interface with all adjoining systems such that consistency is maintained throughout the exterior closure regarding the mode (sliding or racking) in which the system performs to meet interstory drift and other design criteria.
3. Systems and details shall be consistent with the architectural intent for joint sizes and system details to the largest extent possible, or where required, modified only after prior approval

FOUNDATION

1. Soils Report by:------------------------------------ CMT Technical Services
2. Report Number & Date:------------------------------------ CMT Project No. 25777, January 9, 2026
3. Soil Bearing Pressure:------------------------------------ 2000 psf, on undisturbed natural soils
4. Frost Protection:------------------------------------ 30 inches minimum
5. Lateral Soil Pressure Fluid Equivalent Density:
   A. Active------------------------------------ 35 pcf + 27 pcf/psf seismic (retaining walls)
   B. At Rest------------------------------------ 55 pcf + 0 pcf/psf seismic (rigid foundation walls)
   C. Passive------------------------------------ 425 pcf - 185 pcf/psf seismic
6. Coefficient of Friction------------------------------------ 0.4

EARTHWORK

1. Consult the project specifications and soils report for further earthwork requirements. In absence of information, refer to the following notes.
2. Clearing: The entire building area shall be scraped to remove the top 4" of soil including all vegetation and debris.
3. Contractor shall provide temporary shoring for excavations as required.
4. Contractor shall provide measures necessary to prevent damage to or settlement of new or existing construction and utilities on or adjacent to project site.
5. Contractor shall provide dewatering as required to protect the site from flooding.
6. Proof rolling: The natural undisturbed soil below all footings shall be proof rolled prior to placing concrete. Remove all soft spots and replace with compacted structural fill.
7. Compacted structural fill: All fill material shall be a well-graded granular material with a maximum size less than 4" and with not more than 10% passing a #200 sieve. Fill beneath footings shall be compacted to 95% of the maximum laboratory density as determined by ASTM D 1557. All fill shall be tested. Compacted structural fill shall be placed in lifts not exceeding 8" in uncompacted thickness.
8. Floor slabs shall be underlain by a granular layer at least 4" thick. The granular layer shall have a maximum size less than 1" with not more than 5% passing a #200 sieve and shall be compacted to at least 90% of the maximum laboratory density as determined by ASTM D 1557.
9. The soils engineer shall review all excavations and fill placement prior to placing concrete.

CONCRETE

Concrete shall be supplied in accordance with ACI 318 and the following requirements:

Concrete Use	Comp. Strength f 'c (psi)	Exposure Classes per ACI 318 19.3.1 (a,b,c)	Nominal Max. Aggregate Size
Footings	3000	F0, S0, W0, C1	1 1/2"
Foundation Walls	3500	F1, S0, W0, C1	3/4"
Interior Slabs on Grade (d,e,f)	3500	F0, S0, W0, C0	3/4"
Exterior Concrete, Reinforced (g)	5000	F3, S0, W0, C2	3/4"
Exterior Concrete, Unreinforced (g)	4500	F3, S0, W0, C0	3/4"

Table Footnotes:

a. Cement type (ASTM C150 or C595), max. water/cement ratio and fly ash to comply with ACI 318 Table 19.3.2.1.
b. Air content ± 1.5%, to comply with ACI 318 Tables 19.3.2.1 and 19.3.3.1, initially measured at point of final placement and point of discharge. Subsequent measurements may occur only at point of discharge provided air content is adjusted to account for placement losses. Air content shall be adjusted for the use of admixtures, fly ash and aggregate size. Air-entraining admixtures shall comply with ASTM C260 (when used).
c. Calcium chloride shall not be added to the concrete mix. Unreinforced concrete slabs on grade may use calcium chloride as permitted by ACI 318 Table 19.3.2.1.
d. For any exposed slab on grade, the contractor is to notify DAI at least 7 days prior to any pours to discuss the concrete mix design being used as well as present their means and methods of addressing concrete phenomena such as cracking, curling, spalling, etc.
e. Interior slabs on grade shall have a drying shrinkage maximum of 0.040% by ASTM C157 (7-day soak time permitted). Test results shall be submitted with mix designs.
f. For slab on grade 6" or thicker, a maximum aggregate size of 1 1/2" is permitted.
g. These values shall be used for parking slabs on grade or other slabs within the building footprint with exterior exposure to weather. See civil drawings for site concrete requirements.

1. Materials unless noted otherwise:
   A. Normal Weight aggregates------------------------------------ ASTM C33
   B. Fly Ash, Class C or F Pozzolan------------------------------------ ASTM C618
   C. Reinforcing Steel
      1. General------------------------------------ ASTM A615 Grade 60
      2. Columns, Beams, Shearwalls------------------------------------ ASTM A706 Grade 60
         ASTM A615 is permitted if mill certifications are submitted showing that actual yield strength does not exceed the specified strength by more than 18000 psi, the ratio of tensile to yield strength is greater than 1.25, and required minimum elongations of A706 are met.
      3. Subject to approval, A706 Grade 80 may be used at the contractor's option. Subject to the above requirements, ASTM A615 Grade 80 steel may be used at the contractor's option, except in special moment frames and special concrete shear walls.
      4. Reinforcement in walls and slabs may be substituted with equivalent ASTM A1064 Grade 80 deformed welded wire reinforcement, subject to DAI approval. Laps per typical schedule.
   D. Deformed Bar Anchors (DBA) ------------------------------------ ASTM A496
   E. Headed Stud Anchors (HSA) ------------------------------------ ASTM A108
   F. Anchor Bolts: See steel and/or wood section(s) of general notes.
   G. No aluminum conduit or product containing aluminum or any other material injurious to concrete shall be embedded in concrete.
2. Welded wire reinforcement may be substituted with macro synthetic fibers "coarse fibers" (per ASTM C-1116), made from virgin polyolefin, with equivalent diameter between 0.016" and 0.05", having minimum aspect ratio (length/equivalent diameter) of 50, at a minimum rate of 4 lb / cubic yard. Fibers above finished slab shall not be burned off. Do not use fibers in architecturally finished or colored concrete.
3. The contractor shall be responsible for the design, detailing, care, placement and removal of all formwork and shores.
   A. Supporting forms and shoring shall not be removed until structural members have acquired sufficient strength to safely support their own weight and any construction load to which they may be subjected. In no case, however, shall forms and shoring be removed in less than 24 hours after concrete placement.
4. Reinforcement shall have the following concrete clear cover, unless noted otherwise:
   A. Cast-in-place Concrete
      1. Cast against and permanently exposed to earth------------------ 3"
      2. Formed concrete exposed to earth or weather:
         #6 thru #18 bars------------------------------------ 2"
         #5 and smaller bars------------------------------------ 1 1/2"
      3. Concrete not exposed to weather or in contact with ground:
         Slabs, Walls, Joists; #11 bars and smaller -------------------- 3/4"
         Beams, Columns: Primary Reinforcement, Ties,------------- 1 1/2"
         Stirrups, Spirals
5. Construction Joints and Control Joints:
   A. Provide a beveled 2" x 4" x continuous or intermittent keyway in all horizontal and vertical construction joints including between top of footing and foundation walls. In addition, all joints shall be intentionally roughened to a full amplitude of approximately 1/4".
   B. Control joints shall be installed in slabs on grade so the length to width ratio of the slab is no more than 1.25:1. Control joints shall be completed within 12 hours of concrete placement. Control joints may be saw cut or tooled with depth of 1/4 the thickness of the slab (1/3 of slab thickness if it is fiber reinforced).
   C. Install control joints in slabs on grade at a spacing not to exceed 30 times the slab thickness in any direction, unless noted otherwise. Construction joints in slabs on grade shall not exceed a distance of 125'-0" on center in any direction.
   D. Install construction joints in walls at a spacing not to exceed 30 times the wall thickness, except in concrete shear walls. For masonry walls above, align joints in concrete walls with masonry control joints.
   E. Construction joints are not permitted in suspended slabs or beams unless specifically noted on the construction documents or submitted by the Contractor to DAI for review.
6. Construction
   A. Use chairs or other support devices recommended by the CRSI to support bar and tie reinforcement bars and WWR prior to placing concrete. WWR shall be continuously supported at 36" on center maximum. Reinforcing steel for slabs on grade shall be adequately supported on precast concrete units. Lifting the reinforcing off the grade during placement of concrete is not permitted.
   B. Contractor shall coordinate placement of all openings, curbs, dowels, sleeves, conduits, bolts, inserts and other embedded items prior to concrete placement.
   C. All embeds and dowels shall be securely tied to formwork or to adjacent rebar prior to concrete placement.
   D. No pipes, ducts, sleeves, etc. shall be placed in structural concrete unless specifically detailed or approved by DAI. Penetrations through walls when approved shall be built into the wall prior to concrete placement. Penetrations will not be allowed in footings or grade beams unless detailed. Piping shall be routed around these elements and footings stepped to avoid piping.
   E. Reinforcing bars shall not be welded unless specifically shown on drawings. In such cases, use only AWS standards. Do not substitute reinforcing bars for DBAs or HSAs.
   F. Reinforcing bars shall not be field bent, except as shown in the contract drawings or permitted by DAI.
   G. Top of concrete columns shall be flush (±1/4") with bottom of supported cast-in-place members.
7. Detailing:
   A. Lap splice lengths shall be detailed to comply with the "Reinforcing Bar Lap Splice Schedule" contained within the contract drawings.
      1. Do not splice stirrups and ties. Do not splice vertical bars in retaining walls unless specifically shown.
      2. At shear wall boundary elements lap lengths shall be increased by 25%.
      3. Splices may be made with mechanical splices capable of 125% of yield strength of the bar being spliced (Type 1). Splices located within lateral resisting elements shall also develop the tensile strength of the bar (Type 2). Mechanical splices shall be the positive connecting type coupler and shall meet all ACI requirements. Use "Cadweld", "Lenton" Standard Couplers, "Bar-Lock" or equal with internal protector. If mechanical splices are used, splices or couplers on adjacent bars shall be staggered a minimum of 24" apart along the longitudinal axis of the reinforcing bars.
   B. All 90, 135 and 180° hooks shown graphically in the drawings shall be detailed as ACI standard and seismic hooks, unless noted otherwise.
   C. At joints provide reinforcing dowels to match the member reinforcing, unless noted otherwise.
   D. At all discontinuous control or construction slab on grade joints, provide (2) #4 x 48".
   E. Provide corner bars at intersecting wall corners using the same bar size and spacing as the horizontal wall reinforcing.
   F. All vertical reinforcing shall be doweled to footings, or to the structure below with the same size and spacing as the vertical reinforcing for the element above. Dowels extending into footings shall terminate with a 90° standard hook and shall extend to within 4" of the bottom of the footing. Footing dowels (#8 bars and smaller) with hooks need not extend more than 20" into footings.
   G. See details for reinforcing around miscellaneous openings. All recesses that interrupt reinforcing shall be reinforced the same as an opening.
   H. Reference ACI 315 for additional detailing requirements.
8. Contractor required to submit concrete mix design for review by DAI prior to any placement of concrete.
9. All concrete shall be mixed and placed per ACI 304. Contractor shall refer to and follow the recommendations in ACI 305R for hot weather concreting and ACI 306R for cold weather concreting.
10. Contractor is not to backfill against retaining walls unless walls have achieved design strength or have been shored. Contractor is not to backfill against basement walls without placement of the floor(s) bracing the wall unless the walls have been shored or approval of DAI has been granted, or it has been noted otherwise on the design drawings. Where present, slab on grade should be in place at the bottom of retaining or basement walls prior to backfilling.
11. Construction activity or storage of materials shall not take place on newly placed concrete until the concrete achieves sufficient strength to provide adequate support.

POST-INSTALLED ANCHORS

1. Post-installed anchors shall only be used where specifically detailed or called for on the design drawings. If circumstances arise during construction where the Contractor desires to substitute a post-installed anchor in place of a cast-in-place anchor, the Contractor shall submit a formal written request for each circumstance to the Architect and DAI for review.
2. Follow all ICC Evaluation Report and manufacturers' requirements and recommendations for post-installed anchor installation. Where conflicts may exist, the most stringent requirement applies.
3. Post-installed anchors that are exposed to exterior conditions, or interior spaces where moisture can accumulate, shall be either galvanized or stainless steel anchors.
4. All holes in hollow, brick, or stone masonry shall be drilled in the "rotary-only" mode with the hammer function off.
5. For installation of adhesive anchors horizontally or vertically inclined, installers must have AMI/CRSI Adhesive Anchor Installer Certification or approved equivalent.
6. Adhesive anchors shall be as specified in the Contract Documents. If no specific adhesive is specified, or if a particular product is preferred, the Contractor may submit a request for an adhesive from the following list prior to design of the anchor. Follow manufacturer and ICC evaluation report requirements for installation temperature of adhesive anchors. Adhesive anchors shall not be installed or cured outside of approved temperature ranges. Adhesive anchors may not be installed in concrete less than 21 days old without prior approval.
   A. Eligible adhesive anchors in concrete (normal weight only)
      1. HIT-RE 500v3 by Hilti (ESR-3814)
      2. HIT-HY 200v3 by Hilti (ESR-4868)
      3. Kwik-X Dual Action by Hilti (ESR-5065)
      4. SET-3G by Simpson (ESR-4057)
      5. AT-3G by Simpson (ESR-5026)
      6. ET-3G by Simpson (ESR-5334)
      7. Pure 110+ by Dewalt (ESR-3298)
      8. Pure 220+ by Dewalt (ESR-5144)
      9. AC200+ Gold by Dewalt (ESR-4027)
   B. Eligible adhesive anchors in grouted masonry
      1. HIT-HY 270 by Hilti (ESR-4143)
      2. AT-3G by Simpson (ESR-5026)
      3. SET-3G by Simpson (ESR-4844). Also approved for ungrouted masonry.
      4. ET-3G by Simpson (ESR-5309)
      5. AC100+ Gold by Dewalt (ESR-3200)
   C. Eligible adhesive anchors in brick or stone masonry (with anchor sleeves)
      1. HIT HY-270 by Hilti (ESR-4144)
      2. ET-3G by Simpson (IAPMO ES ER-870)
      3. AC100+ Gold by Dewalt (ESR-4105)
7. Mechanical anchors shall be as specified in the Contract Documents. If no specific mechanical anchor is specified, or if a particular product is preferred, the Contractor may submit a request for an anchor from the following list prior to design of the anchor.
   A. Eligible mechanical anchors in concrete
      1. Kwik Bolt TZ2 by Hilti (ESR-4266)
      2. Kwik HUS-EZ by Hilti (ESR-3027)
      3. HDI-P TZ by Hilti (ESR-4236)
      4. Strong-Bolt 2 by Simpson (ESR-3037)
      5. Titen HD by Simpson (ESR-2713)
      6. Torq-cut by Simpson (ESR-2705)
      7. Trubolt+ by ITW (ESR-2427)
      8. Tapcon/Sammy Anchors by ITW (ESR-2202)
      9. Power-Stud+ SD2 by Dewalt (ESR-2502)
      10. Power-Stud+ SD4 and SD6 Stainless by Dewalt (ESR-2502)
      11. Snake+ by Dewalt (ESR-2272)
      12. Screw-Bolt+ by Dewalt (ESR-3889)
      13. Mini Undercut+ by Dewalt (ESR-3912)
   B. Eligible mechanical anchors in grouted masonry
      1. Kwik Bolt 3 by Hilti (ESR-1385)
      2. Kwik HUS-EZ by Hilti (ESR-3056)
      3. Kwik Bolt TZ2 by Hilti (ESR-4561)
      4. Titen HD by Simpson (ESR-1056)
      5. Strong-Bolt 2 by Simpson (IAPMO ES ER-0240)
      6. Power-Stud+ SD1 by Dewalt (ESR-2966)
      7. Screwbolt+ by Dewalt (ESR-4042)
8. The Contractor may also submit for review and approval, the manufacturer's ICC evaluation report of alternate anchor systems not listed above. The alternate system shall provide minimum capacities equal to or greater than the specified anchor system. The alternate system shall be approved by DAI prior to the substitution.

MASONRY

1. Materials shall be as follows, unless noted otherwise:
   A. Design strength of all masonry shall be f 'm=2000 psi at 28 days, unless noted otherwise.
   B. Concrete Masonry Units (CMU) shall be ASTM C-90, Grade N, Type 1, medium weight (115 pcf) with a minimum unit strength of 2000 psi at 28 days for net area.
   C. Hollow Clay Masonry Units shall be ASTM C652 , Grade SW, Type HSB with a minimum unit strength of 8250 psi for net area (f 'm=3000 psi).
   D. Solid Clay Masonry Units shall be ASTM C62, Grade SW, with a minimum compression strength of 3000 psi at 28 days.
   E. Mortar shall be ASTM C270 Portland cement - lime, type "S", with a minimum compression strength of 2000 psi at 28 days. See specifications for additives allowed. Masonry mortars and masonry cements are not allowed. Use type "M" mortar for masonry below grade (2500 psi).
   F. Grout shall be ASTM C476, with a minimum compression strength at least equal to the design strength F'm at 28 days. Limit fly ash to 25% of the total cementitious material. Slump shall be between 8" and 11".
   G. Reinforcing bars shall be ASTM A615, grade 60, (Fy = 60 ksi) except only ASTM A706, grade 60, "low alloy" steel shall be used for reinforcing shown to be welded.
   H. Joint Reinforcing shall be ASTM A951, galvanized, standard class, ladder type with #9 wire per ASTM A82.
   I. Deformed Bar Anchors (DBA) shall be ASTM A496.
   J. Headed Stud Anchors (HSA) shall be ASTM A108.
   K. Anchor Bolts shall be ASTM F1554 Grade 36. Heavy hex nuts shall be ASTM A563.
   L. Mechanical splice couplers shall be ASTM A1034 and shall be capable of developing 125% of the specified yield strength of the bar.
2. Construction Requirements
   A. All masonry construction, workmanship, and materials shall comply with TMS 602/ACI 530.1/ASCE 6, "Specifications for Masonry Structures".
   B. All masonry units shall be stored under cover at the job site. Do not use any frozen materials.
   C. Prior to placing masonry, check with all trades to insure proper placement of openings, block outs, sleeves, curbs, conduits, bolts, inserts, embeds, dowels, etc.
   D. During construction, cover and protect the top of all constructed masonry at the end of each day. No "toothing" or doweling only will be permitted.
   E. All masonry walls, lintels, and columns shall be built with running bond, typical unless noted otherwise.
   F. Mortar joints for all hollow units, both vertical head joints and horizontal bed joints, shall be bedded for a distance at least equal to the thickness of the face shells. The webs each side of cells to be grouted shall be bedded as well. Mortar joints for all solid masonry units, both vertical head joints and horizontal bed joints, shall be fully bedded.
   G. Do not use mortar for grout.
   H. Grout pours shall be limited to 5'-4" in height (aka low lift grouting), typical, unless TMS 602 procedures are followed for higher grout pours including cleanouts. lift height and self-consolidating grout.
   I. Grout pours shall terminate flush with the top of the uppermost unit except at cells with vertical reinforcing where the grout shall be 1-1/2" below the top of the unit to provide a construction key.
   J. Grout shall be consolidated by mechanical vibration during placement and reconsolidated after excess moisture has been absorbed but before workability is lost. Puddling or rodding of grout is not allowed.
   K. Grout solid all cells which contain reinforcing, bolts, anchors, etc., and as otherwise specified. Grout solid all cells below grade. Grout solid all lintels and columns. Do not grout walls solid unless specifically noted as such. Grout solid around all joist and beam bearing pockets after installation of beams and joists, typical, unless noted otherwise.
   L. Vertical cells to be filled with grout shall have vertical alignment sufficient to maintain a clear, unobstructed, vertical cell measuring not less than 2" x 3".
   M. See architectural drawings for locations of control joints. Masonry control joint spacing shall not exceed 26'-0". Corners are to have a control joint on one side of the corner within 2'-0" of the corner. Control joints shall not be over or within 4'-0" of openings. Control joints shall not be placed in masonry columns. If these requirements cannot be satisfied, walls with multiple openings (3'x3' or larger) may have control joint spacing increased to 40'-0" max.
   N. Penetrations shall not be allowed through any masonry lintel, column, pilaster, or jamb without the DAI's prior written approval. Penetrations shall be re-routed as required at these locations. Penetrations through masonry walls shall be built into the wall as the wall is being constructed and shall be reviewed by the DAI prior to installation. Conduits or pipes shall not run in reinforced cells and units without notification and approval by DAI.
   O. Masonry walls and columns shall be securely braced until floor and/or roof systems have been installed and are capable of stabilizing the masonry.
   P. Where horizontal reinforcing bars join concrete walls, columns, or pilasters, reinforcing shall be continuous. Also, a key shall be provided between the masonry and the concrete. Fill the key with grout.
   Q. Bolt holes in face or end shells shall have a diameter two inches larger than the bolt diameter and the hole shall be filled with grout.
   R. Post-installed anchor bolts shall only be installed with prior written approval of the DAI. When used, they shall be installed in solid material. Grout solid at cavity locations. All bolt holes to be filled with epoxy shall be wire brushed and cleaned with compressed air per manufacturer's recommendations.
3. Detailing Requirements
   A. Reinforcing steel shall be free of loose flakey rust, scale, grease, oil, dirt, or other deleterious materials which might affect or impair bond.
   B. Minimum grout coverage for reinforcing bars shall be one bar diameter, but not less than ¾". Minimum mortar coverage for joint reinforcing shall be 5/8" from exposed face.
   C. Reinforcing steel shall be placed prior to grouting and shall be placed, positioned, and located according to the structural drawings. It shall be secured against displacement by wire positioners or other suitable devices at intervals not to exceed 200 bar diameters or ten feet, and at all bar splice locations.
   D. Lap all masonry reinforcing per the "Masonry Reinforcing Bar Lap Splice Schedule" in the contract documents. In the absence of this schedule, lap all masonry reinforcing per bar size as follows:
      1. One bar/cell, typical: #3=12", #4=13", #5=20", #6=38", #7=52", #8=72", #9=81".
      2. Two bars/cell, typical: #3=13", #4=22", #5=35", #6=54", #7=63", #8=72" and #9=81".
   E. Vertical reinforcing shall be doweled into the foundation wall, footing, or structure below with the same size bar, spacing, and in same core as the vertical reinforcing in the wall above.
   F. Horizontal reinforcing shall be continuous through masonry walls, columns, and pilasters.
   G. Horizontal reinforcing at masonry control joints shall be continuous through the joint, typical, unless noted otherwise.
   H. Reinforcing bars shall not be field bent, except as shown in the contract drawings or permitted by DAI.
   I. Walls:
      1. Masonry walls shall be built as an integral unit at corners and intersections. Reinforcing shall be continuous and back-to-back end shells shall be removed at each course.
      2. Vertical reinforcing shall be placed in the center of the wall, typical, unless each face is specified or unless noted otherwise.
      3. Vertical reinforcing shall be provided at each corner and intersection.
      4. Horizontal corner bars shall be provided at all wall intersections and corners. Use same size and spacing as horizontal reinforcing. Provide proper lap lengths.
      5. Horizontal reinforcing shall terminate with a standard hook at the edge of openings and at ends of walls, around the vertical bar.
      6. Horizontal reinforcing shall occur at the top and bottom course of all masonry walls except the bottom course horizontal reinforcing may be omitted when the wall is doweled to a concrete foundation wall below.
   J. Lintels
      1. Masonry lintels shall be built as an integral part with the support. Masonry units with lintel block ("U" blocks) or one open end ("A" blocks) shall be used in all masonry lintels. Back-to-back end shells are not allowed. Grout all masonry lintels solid for full depth and width shown in the masonry lintel schedule.
      2. Reinforcing shown in the masonry lintel schedule is in addition to standard wall reinforcing.
      3. Extend all horizontal lintel reinforcing beyond the edge of all openings a lap splice length. If this is not possible, extend reinforcing as far as possible and terminate with 90 degree hook.
      4. Vertical reinforcing bars shall hook around the bottom horizontal reinforcing bars. They shall also hook around the top horizontal reinforcing bars or extend into the wall above the lintel a minimum of 48 bar diameters.
      5. Do not splice horizontal top or bottom bars of lintels, typical unless noted otherwise.
   K. Columns/Jambs
      1. All masonry column ties shall terminate with a 135 degree hook plus a 6 bar diameter extension (4" minimum). Horizontal wall reinforcing shall be placed inside the column vertical reinforcing.
      2. Grout jambs solid for full height of wall (floor to floor and/or roof) at sides of openings; one cell for each 4'-0" of span or portion thereof. Reinforce with (2) #5 vertical bars in each grouted cell with one bar placed at each face of wall, typical unless noted otherwise. See contract documents for other reinforcing requirements.
   L. Reinforcing shall not be welded unless specifically noted otherwise. In such cases, use AWS D1.4 standards. Do not substitute bars for DBA's or HSA's.
   M. Epoxy Coated reinforcing shall only be used when specifically noted. Increase lap lengths as required by the IBC and ACI.

ANCHORED MASONRY VENEER (PRESCRIPTIVE DESIGN)

1. Anchored masonry veneer units shall be:
   A. Compliant with the following standards:
      1. CMU: ASTM C55, C73, C90, C129, C744, C1634 or C1877
      2. Clay: ASTM C62, C126, C212, C216, C652, C1405 or ANSI A137.1
      3. Dimension Stone: ASTM C503, C568, C615, C616 or C629
      4. Cast Stone: ASTM C1364
   B. No more than 5" thick.
   C. No taller than 16".
   D. No heavier than 50psf.
2. Exterior veneer exceeding 30 ft or 38 ft at a gable in height above the vertical support is not permitted. In Seismic Design Categories E and F, support must be provided at each floor.
3. Adjustable ties shall be used to anchor veneer to wood, metal stud, concrete or masonry walls. Approved manufacturers include Heckman and Hohman & Barnard. The contractor may submit a different manufacturer for approval. Follow all manufacturers' recommendations. Maximum cavity width is 6".
   A. Sheet metal components of ties shall be at least 7/8" wide, 0.06" thick and be bent, notched or punched to provide equivalent performance in pull-out or push-through.
   B. Wire components of ties shall be at least W1.7 wire for 4" max cavities, W2.8 wire for larger cavities, with no drips/deformations.
   C. Ties shall have a maximum clearance of 1/16" between connected parts and be detailed to prevent disengagement.
   D. Ties shall have one or more pintle legs (W2.8 minimum), have two wires embedded in the veneer, and have a vertical wire offset of 1.25" or less. For cavities exceeding 4", two pintle legs (W2.8 minimum) and maximum of 2" from inside face of veneer to end of the adjustable part are required.
   E. For the part of the tie attached to the backing, either a solid metal barrel (3/16"Ø minimum) or 0.74" thick x 1.25" wide plate/prong.
4. Veneer Tie Spacing and Fasteners
   A. Ties shall be spaced at 16" on center maximum horizontally and vertically. Locate ties within 16" of supported edges and within 12" of unsupported edges, openings, and movement joints. The distance from the top of the veneer to the first row of veneer ties shall not exceed one-half the maximum spacing.
   B. Fasteners for ties to backing shall be as follows:
      1. Wood: Minimum No. 10 screws with 1 3/8" penetration into backing, or where sheathing is present, into the structural member behind the sheathing (not to insulation or sheathing).
      2. Metal Stud: Minimum No. 10 screws extending through the cold formed metal framing a minimum of three exposed threads. Cold formed metal framing shall be corrosion resistant and have a minimum base metal thickness of 0.043 in.
      3. Concrete/Masonry: Fasteners shall have a minimum design strength of 335 lb (LRFD) or an allowable load of 200 lb (ASD).
5. Steel Lintels: Provide steel angle lintels at all openings through the masonry veneer. Provide 1" of bearing for each foot of width of opening, with a minimum bearing of 6". See the Steel Angle Lintel Schedule for size.
6. Water Penetration Resistance: 1" minimum drainage space required, together with flashing to resist water penetration beyond the drainage space. Weep holes shall be at least 3/16" in diameter and spaced less than 33" on center.

ADHERED MASONRY VENEER (PRESCRIPTIVE DESIGN)

1. Adhered masonry veneer units shall be:
   A. Compliant with ASTM C1088, ASTM C1364, ASTM C1670/C1670M, or ASTM C1877.
   B. No more than 2.625" thick on average.
   C. Less than 360 in² surface area per unit.
   D. No heavier than 30psf.
2. Mortar Requirements for Scratch Coat, Setting Bed and Joints Between Units
   A. Scratch coat shall comply with ASTM C270 (Type M or S), ASTM C1714 (Type M or S), ANSI A118.4 or ANSI A118.15.
   B. Setting bed mortar shall comply with ANSI A118.4 or ANSI A118.15.
   C. Mortar between units shall comply with ASTM C270 (Type S or N), ASTM C1714 (Type S or N), ANSI A118.4 or ANSI A118.15.
3. Installation Requirements: Lath and scratch coat are not required when adhered masonry veneer units are applied directly to concrete, unglazed clay or concrete masonry, or cement backer units free of coatings, debris, membranes, or similar materials that would inhibit bond to those surfaces.
4. General Requirements
   A. The distance from the exterior surface of the adhered masonry veneer units to the interior surface of the scratch coat or cement backer unit shall not exceed 4.625". The weight of the veneer assembly (units, setting bed mortar, scratch coat and lath) shall not exceed 50 psf.
   B. The height above the grade plane shall not exceed 60 feet.
   C. Wood/Metal Stud backing: Sheathing is required over light frame backing receiving an adhered veneer assembly. Fasteners for lath over light framed backing should be attached directly to structural studs, not sheathing, and shall comply with the adhered veneer fastener schedule.
   D. Concrete/Masonry backing: Veneer shall be directly applied to concrete or masonry backing. When directly bonding adhered masonry units to a backing of dissimilar material, for example, thin clay units adhered to a concrete masonry backing, install a bond break and lath between the veneer and backing and allow to cure for 45 days before the adhered veneer is installed.

STRUCTURAL STEEL

1. Codes and Standards: Fabrication, Erection and Quality Control of structural steel shall comply with the latest edition of the following:
   A. American Institute of Steel Construction (AISC) 360, "Specification for Structural Steel Buildings," with "Commentary".
   B. AISC 341 "Seismic Provisions for Structural Steel Buildings."
   C. AISC 303 "Code of Standard Practice" excluding sections 3.4, 4.4 and 4.4.1.
   D. AISC "Specification for Structural Joints Using High Strength Bolts"
   E. American Welding Society (AWS), Structural Welding Codes D1.1, D1.3, D1.4, and D1.8, except as modified by the "Steel Construction Manual".
2. Material:
   A. Wide Flange Sections------------------------------------ ASTM A992 (50 ksi)
      Notch-toughness requirements apply for Group 3, 4, and 5 shapes with flange thickness greater than 1 1/2" and plate 2" and thicker which are a part of the Seismic Load Resisting System (SLRS). Minimum Charpy V-Notch requirements are 20 ft-lbs at 70°F.
   B. Plate
      1. Typical------------------------------------ ASTM A36
   C. Pipe------------------------------------ ASTM A53 Grade B Type E/S
   D. Hollow Structural Shapes
      1. Rectangular------------------------------------ ASTM A500 Grade C (50 ksi)
      2. Round------------------------------------ ASTM A500 Grade C (46 ksi)
   E. Other Structural Shapes (M, C, etc), Threaded Rod--- ASTM A36
   F. Bolted Connections------------------------------------ ASTM F3125 Grade A325 with ASTM A563 heavy hex nuts and ASTM F436 washers.
   G. Anchor Bolts
      1. All Columns unless noted otherwise: ASTM F1554 Grade 105 with ASTM A563 heavy hex nuts. Nuts to be snug tight.
      2. Braced Frame/Moment Frame Columns unless noted otherwise: ASTM F1554 Grade 105 (equiv to A193 Grade B7) with ASTM A563 heavy hex nuts with 5/16" min plate washers (ASTM A572 Grade 50). Bottom assembly to include double heavy hex nuts with similar washer. Nuts to be snug tight.
   H. Weld Filler Metal
      1. Shielded Metal Arc Welding---------------------------- AWS A5.1, low-hydrogen only
         Low-hydrogen restrictions do not apply when welding sheet steels in accordance with AWS D1.3, including attaching these steels to structural members.
      2. Gas-Metal & Metal-Cored Arc Welding------------- AWS A5.18
      3. Flux-Cored Arc Welding------------------------------------ AWS A5.20
         E7XT-4 or E7XT-11 electrodes are not permitted.
      4. Intermixing of welds made from self-shielded welding electrodes with welds made by other processes is not allowed in seismic critical welds, unless tested in accordance with AWS D1.8, annex B. The Field Erection Contractor is responsible for verifying that intermixing of self-shielded weld metal with weld metal of other processes will not occur, or alternatively, the welding procedure is qualified by testing.
      5. Where demand critical welds are required, provide filler metals meeting the following minimum mechanical properties: 58ksi yield strength, 70ksi tensile strength, 22% elongation, Charpy V-Notch toughnesses of 20ft-lbs at 0°F and 40 ft-lbs at 70°F.
   I. Deformed Bar Anchors (DBA)------------------------------------ ASTM A496
   J. Headed Stud Anchors (HSA)------------------------------------ ASTM A108
   K. Non-Shrink Grout------------------------------------ ASTM C1107 Grade B
      Non-shrink grout shall be prepackaged, non-metallic and non-gaseous.
      Furnish certified independent test data to DAI.
      Compressive Strength in 28 days = 7,500 psi
   L. Refer to architectural drawings for structural steel fireproofing or architecturally exposed steel requirements.
   M. All steel, connectors and embeds exposed to weather shall be galvanized, unless noted otherwise.
3. Structural Detailing
   A. Welds may be performed in the shop or the field. Designations of field welds on the Contract Documents are shown where it is anticipated field welds may be required, and are shown only for the purpose of assisting the Contractor in the bidding process. The Contractor shall coordinate the welding sequence between sub-contractors, and any costs associated with variations in the welding sequence are outside the scope of the DAI, and are the responsibility of the Contractor. Field welding is to be minimized where possible. Contractor is to verify that the sequencing of welds meets all safety regulations, and the requirements of the Construction Documents and their referenced codes. Welding in the 'k' region of wide flange members is prohibited unless noted otherwise.
   B. Provide full depth web stiffener plates at one side of all beams at all bearing points, unless noted otherwise. Stiffener plates shall be the thickness called out below unless noted otherwise. Stiffeners shall be welded on both sides of the plate-to-flange and plate-to-web interfaces.
      FLANGE WIDTH------------------------------------ STIFFENER THICKNESS & WELD SIZE
      Less than 8 1/4"------------------------------------ 1/4" & 3/16"
      8 1/4" to 12 1/4"------------------------------------ 3/8" & 1/4"
      12 1/4" to 16 1/2"------------------------------------ 1/2" & 5/16"
      16 1/2" to 20 3/4"------------------------------------ 5/8" & 3/8"
   C. Bolting and Fasteners
      1. Ordinary steel-to-steel connections, simple span framing, and beam/girder-to-bearing plates are the standard connection used throughout the design drawings, unless noted otherwise:
         a. Use A325N bolts or tension-controlled bolts.
         b. Tighten these fasteners to a "snug tight" condition.
         c. Where a steel-to-steel connection is not shown, provide a framed connection per AISC for one half the total uniform load capacity of the beam for the span and steel specified.
      2. Pretensioned connections are shown on the structural design drawings. They join steel-to-steel connections, unless noted otherwise:
         a. Use A325N or A325X bolts or tension-controlled bolts.
         b. Pretension these fasteners as required by AISC "Specification for Structural Joints Using ASTM A325 or a A490 bolts."
      3. Slip Critical connections (SC) are shown on the structural design drawings. They join steel-to-steel connections in Seismic Load-Resisting Systems (SLRS).
      4. Fasteners and washers shall not be reused. Scrap dirty, rusted, or water-contaminated bolt assemblies.
      5. All holes for bolts are to be standard AISC holes unless noted otherwise.
   D. Weld Access Holes and Temporary Attachments
      1. Fabricate beam copes and weld access holes using the geometry described in AISC 360 Section J1.6.
      2. Runoff tabs are to be removed unless noted otherwise.
   E. All welds not noted on drawings shall be minimum 1/4" fillet welds.
   F. All structural steel members shall be considered as an unrestrained fire-resistance-rated assembly.
4. Welding of Reinforcing Steel or Bolts
   A. Reinforcing Bars: Do not weld rebar except as specifically detailed in the drawings. In such cases, use only AWS standards. Do not substitute reinforcing bars for deformed bar anchors, structural bolts, or headed stud anchors.
   B. Do not weld anchor bolts, including "tack" welds.
   C. Headed Stud Anchor welding and Deformed Bar Anchor welding shall conform to the manufacturer's specifications.

WOOD

1. Materials (Dry service conditions assumed. Max moisture content of 19% for Sawn Lumber and Connections; 16% for all others)
   A. Dimension Lumber and Timbers (Sawn Lumber)
      1. All dimensioned lumber shall comply with USDOC PS20.
      2. Visually graded dimension lumber shall be Douglas Fir-Larch #2 or better.
         A. Fb= 900, E = 1.6x10^6, Fcperp = 625, Fv = 180, Fcpar=1350, Ft = 575, G=0.5.
      3. Visually graded timbers (5" x 5" and larger) shall be Douglas Fir-Larch #1 or better.
         A. Beams & Stringers (Width>Thickness +2"): Fb= 1350, E = 1.6x10^6, Fcperp = 625, Fv = 170, Fcpar=925, Ft = 675, G=0.5.
         B. Posts & Timbers (Width<Thickness +2"): Fb= 1200, E = 1.6x10^6, Fcperp = 625, Fv = 170, Fcpar=1000, Ft = 825, G=0.5.
      4. Machine stress rated (MSR) lumber shall be 1650f-1.6E or better. Fb= 1650, E = 1.6x10^6, Fcpar=1700, Ft = 1175, G=0.5.
      5. Approved end jointed lumber may be used interchangeably with solid sawn members of the same species and grade.
   B. Laminated Strand Lumber (LSL), Laminated Veneer Lumber (LVL) and rim board
      1. All LSL material shall be a minimum of 1 1/2" thick with the following design values in psi:
         A. Fb= 1700, E = 1.3x10^6, Fcperp = 710, Fv = 425, Fcpar=1835, Ft = 1300, G=0.5. (Weyerhaeuser Timberstrand)
      2. All LVL shall be a minimum of 1 3/4" thick with the following design values in psi:
         A. Fb = 2600, E = 2.0x10^6, Fcperp=750, Fv = 285, Fcpar =2510, Ft = 1895, G=0.5 (Weyerhaeuser Microllam)
      3. All rim boards shall be a minimum of 1 1/2" thick. See bearing wall schedule for vertical capacity requirements.
      4. Handle, store and install all engineered lumber per the manufacturer's guidelines.
      5. See manufacturer guidelines for hole locations and sizing.
      6. LSL, LVL and rim board of equal design properties as determined by ASTM D5456 may be substituted with written approval from DAI.
   C. Prefabricated Wood I-joists (G=0.5)
      1. Category, depth and spacing of I-joists are shown on plan (Weyerhaeuser TJI). I-joists conforming to ASTM D5055 may be substituted provided I-joist design calculations and layouts are stamped by a design professional licensed in the state of the project location, and meet the following criteria:
         A. I-joists shall match the depths shown. I-joists shall have a maximum spacing of 19.2"oc on floors and 24"oc on roofs.
         B. I-joist loading is shown on plan. The deflection of I-joists supporting floors shall be limited to L/360 for total load (3/4" max) and L/480 for live load. The deflection of I-joists supporting roofs shall be limited to L/240 for total load (3/4" max) and L/360 for live load.
      2. Handle, store and install all wood I-joists per the manufacturer's guidelines.
      3. Holes cut in the webs of the I-joists shall be per the manufacturer's guidelines. DO NOT cut or notch flanges.
   D. Wood Structural Panel Sheathing (G=0.5)
      1. Wood structural panels shall conform to the requirements for its type in USDOC PS1 or USDOC PS2. The panels must be identified by the trademarks of the approving testing and inspection agency.
      2. Wood sheathing shall be APA rated sheathing Exposure 1 unless noted otherwise. See plans and schedules for thickness and span rating.
   E. Nails
      1. All Nails shall conform to the requirements specified in ASTM F1667, "Standard Specification of Driven Fasteners: Nails, Spikes and Staples."
      2. All nails shall be common nails with the following properties:
         Nail-----------------Shank Diameter------------------------------Min. Penetration into Support
         6d--------------------0.113"------------------------------------1.25"
         8d--------------------0.131"------------------------------------1.50"
         10d-------------------0.148"------------------------------------1.63"
         12d-------------------0.148"------------------------------------1.63"
         16d-------------------0.162"------------------------------------1.75"
         Nails with properties less then those listed above shall not be used without prior written approval from DAI. Hy-Tek nails may be substituted for common nails per ESR-2648.
      3. Nails with "T", brad, finish or casing heads are not permitted. Nails with Round (full), Offset, Oval, Clipped or Notched heads are acceptable.
      4. Deformed shank nails shall have either a helical (screw) or an annular (ring) shank.
   F. Bolts
      1. Anchor Bolts: ASTM F1554 Grade 36
      2. All anchor bolts connecting shearwall sill plates to the concrete foundation shall have a PL1/4"x3"x3" washer between the sill plate and the nut, UNO. See the shear wall schedule.
      3. Connection Bolts: ASTM A307 Grade A/C or ANSI Standard B18.2.1.
      4. Bolt holes shall be a minimum of 1/32" to a maximum of 1/16" larger than the bolt diameter. Holes shall be accurately aligned in main members and side plates or side members. Bolts shall not be forcibly driven.
      5. At all bolted connections, provide a standard cut or larger washer or metal plate between the wood and the bolt head and between the wood and the nut.
   G. Connection Hardware
      1. All connection hardware shown shall be supplied by Simpson Strong-Tie Incorporated, unless noted otherwise. Install all hardware per the manufacturer's guidelines, filling all available holes with nails.
      2. Connection hardware of equal design properties, including MITEK Structural Connectors or other manufacturers may be substituted with written approval from DAI.
2. Per IBC 2304.3.3, all mechanical, electrical, plumbing and drainage systems shall accommodate for the effects of wood shrinkage, approximately 1/4" shrinkage per level, cumulative from base to roof. Potential solutions may include vertically elongated holes through studs for horizontal pipe (following permitted holes and notches detail), vertical expansion joints on vertical pipes, or other industry standards. 1/4" per floor accounts for 5 plates (7.5") shrinking 7.5% times the difference between initial and final moisture contents of 19% and 8% respectively, divided by 30%. 7.5/100* 11/30*7.5" = 1/4". 5 plates is one sill plate, two top plates and two truss chords.
3. All fasteners in contact with preservative-treated or fire-treated wood shall be hot-dipped zinc-coated galvanized or stainless steel.
4. All wood in contact with concrete, masonry or soil shall be preservative-treated or redwood.
5. Design values adjusted for fire-treated lumber using Pyroguard (ESR-1791). Substitutions eligible by approval.
6. General framing and carpentry shall be connected as per "THE MINIMUM NAILING SCHEDULE" unless noted otherwise.
7. All bearing and shear walls shall have a minimum of 2 top plates. See details for splices in top plates.
8. Provide either an additional joist within 2" of centerline of parallel partitions, or provide 2x4 flat blocking at 24"oc between joists to support partitions.
9. Solid blocking at eaves may be omitted where required for ventilation (1 block in 5), unless noted otherwise.
10. Holes or penetrations through bearing walls shall be limited to the clear space between studs. Holes in shear wall sheathing shall be limited to 6" diameter (max), spaced at a minimum of 3 diameters on center. The accumulated length of openings in a shear wall shall not exceed 20% of the wall length, unless noted otherwise.

Permit Set

This set is submitted as a complete set of structural drawings to be reviewed by the City or Governing Jurisdiction responsible for issuing a Building Permit. Upon their final review and re-submittal of these drawings it is understood that this set will be re-issued for General Contractor pricing. The General Contractor is not to provide a GMP off this submittal.

APRIL 16, 2026
PERMIT SET

NOTE:
THESE STRUCTURAL DRAWINGS ARE BASED ON ARCHITECTURAL DRAWINGS DATED APRIL 16, 2026

DIMENSIONS AND ELEVATIONS, AS THEY RELATE TO THE BUILDING IN GENERAL, i.e. GRID TO GRID DIMENSIONS OR DECK BEARING ELEVATIONS, ARE SUPPLIED BY THE ARCHITECT. THEY ARE PROVIDED ON THE STRUCTURAL PLANS AND DETAILS FOR THE CONVENIENCE OF THE CONTRACTOR. VERIFY DIMENSIONS AND ELEVATIONS WITH ARCHITECTURAL DRAWINGS.

Babcock Design

Salt Lake City
52 Exchange Place
Salt Lake City, UT 84111
801.531.1144

Boise
800 W Main Street, Suite 940
Boise, ID 83702
208.424.7675

babcockdesign.com

Consultant

PROFESSIONAL STRUCTURAL ENGINEER
GREGORY S. DUNN
04/16/2026
9027257
STATE OF UTAH

client name

ALPINE FIRE STATION

50 E 100 N ALPINE, UT 84004

Revisions

Num.	Description	Date

Project Number	25116
Original Issue	APRIL 16, 2026
Project Status	PERMIT SET

The information and content represented herein is considered by law the architect's instruments of service and are the property of Babcock Design. They are available for limited review and evaluation by clients, consultants, contractors, government agencies, vendors, and office personnel only in accordance with this notice. They are intended for use only for the project specified and are to be used for no other purpose or project including additions to or modification of the completed project. No part thereof may be copied, reproduced, photographed, modified, published, uploaded, transmitted, disclosed, sold, distributed to others in any way including in digital form, or otherwise used without the prior written consent of Babcock Design.

COPYRIGHT © 2025 BABCOCK DESIGN

Stamp

PRELIMINARY
NOT FOR CONSTRUCTION

Sheet Title

GENERAL STRUCTURAL NOTES

Sheet Number

S-001

ABBREVIATIONS

AB	Anchor Bolt	JST	Joist
ABV	Above		
ALT	Alternate	K	Kip(s) = 1000 Pounds
ARCH	Architect	KLF	Kips Per Lineal Foot
ADD'L	Additional	KSI	Kips Per Square Inch
ASD	Allowable Stress Design (Service)		
@	At	LB	Pounds (#)
		LOC	Location
BB	Bottom Bar	LRFD	Load & Resistance Factored Design (Strength)
BH	Bottom Hook	LSL	Laminated Strand Lumber
BLDG	Building	LVL	Laminated Veneer Lumber
BLKG	Blocking	LWC	Light Weight Concrete
BLW	Below		
BM	Beam	MAS	Masonry
BN	Boundary Nail	MAX	Maximum
BOTT	Bottom	MECH	Mechanical
BRDG	Bridging	MEZZ	Mezzanine
BRG	Bearing	MFR	Manufacturer
BTWN	Between	MIN	Minimum
BYND	Beyond	MISC	Miscellaneous
		MTL	Metal
CANT	Cantilevered		
CGS	Center of Gravity of Strand	NS	Non-shrink
CJ	Control Joint	NTS	Not To Scale
CJP	Complete Joint Penetration	NWC	Normal Weight Concrete
CL	Center Line		
CMU	Concrete Masonry Unit	oc	On Center
COL	Column	OPNG	Opening
CONC	Concrete	OPP	Opposite
CONN	Connection	OSB	Oriented Strand Board
CONT	Continuous		
COORD	Coordinate	PAF	Power Actuated Fastener
CS	Coil Strap	PCF	Pounds per Cubic Foot
CTR	Center	PEN	Penetrate or Penetration
		PERP	Perpendicular
DB	Deck Bearing	PFT	Pre-Fabricated Truss
DBA	Deformed Bar Anchor	PJP	Partial Joint Penetration
DBL	Double	PL	Plate
DOW	Demand Critical Weld	PLF	Pounds per Lineal Foot
DET	Detail	PREFAB	Prefabricated
DIA	Diameter	PSF	Pounds per Square Foot
DIM	Dimension	PSI	Pounds per Square Inch
DWG	Drawing	PT,DF	Pressure Treated Douglas Fir (or appropriate species for region)
(E)	Existing		
EA	Each	REINF	Reinforce
EF	Each Face	REQD	Required
EL	Elevation	RTU	Roof Top Unit
ELEC	Electrical		
EN	Edge Nail	SB	Shear Bars/Hairpins (135°/90° HK)
ENGR	Engineer	SCHED	Schedule
EQ	Equal	SFRS	Seismic Force Resisting System
EQUIP	Equipment	SHTG	Sheathing
EQ SP	Equally Spaced	SIM	Similar
EW	Each Way	SMS	Sheet Metal Screw
EJ	Expansion Joint	SN	Sill Nail
ES	Edge Screw	SOG	Slab on Grade
EXT	Exterior	SR	Stud Rail
		STD	Standard
FLR	Floor	STFF	Stiffener
FND	Foundation	STL	Steel
FRT	Fire resistance treated	STRUCT	Structural
FTG	Footing	SW	Shear Wall
ga	Gage	T&B	Top and Bottom
GALV	Galvanized	TB	Top Bar
GLB	Glued Laminated Beam	TEMP	Temperature
GSN	General Structural Notes	TH	Top Hook
GT	Girder Truss	THRU	Through
		T/	Top of
HD	HOLD DOWN	TYP	Typical
HK	Hook		
HORIZ	Horizontal	UNO	Unless Noted Otherwise
HSA	Headed Stud Anchor		
HSS	Hollow Structural Section	VERT	Vertical
IBC	International Building Code	W/	With
ICC	International Code Council	WWR	Welded Wire Reinforcement
INT	Interior	WP	Working Point

Typically the structural sheets are organized as follows:

"S" SHEET SERIES	DESCRIPTION
0XX	General Notes, Specifications and Loading Plans
1XX	Plan Sheets
2XX	Elevations and Elevation Details
3XX	Building Sections
4XX	Enlarged Plans, Elevator/Stair Plans and Details
5XX	Foundation Details
6XX	Floor Details
7XX	Roof Details
8XX	Schedules
9XX	Isometrics, 3D views, Renderings

DEFERRED SUBMITTALS

1. Deferred submittals are items that are not part of our scope which require architectural and/or engineering review. Deferred submittals include plans, details, calculations and/or other relevant design information stamped by a Professional Engineer licensed in the state in which construction will occur.
2. Deferred submittals shall first be submitted to the project architect and/or DAI for review and coordination. Upon completion of the architect/DAI review, the architect/DAI will submit the deferred submittals to the Building Official for review and approval. The submittal to the Building Official shall include a notation stating that the architect/DAI review has been performed and that the plans and calculations for the deferred submittal items are found to be in general conformance with the design drawings with no exceptions.
3. Construction related to deferred submittals shall not commence until the Building Official has approved the submittal. Approved deferred submittals shall be available at the jobsite throughout construction.
4. Items requiring deferred submittals are listed below. These items shall be designed and fabricated by the manufacturer according to specifications given in the construction documents.
   A. Exterior façade, cladding and their connections (by supplier) showing compliance with drift requirements
   B. Handrails, guardrails, ladders and other railings, and their connections (by supplier)
   C. Fences and Landscaping Structures (by supplier)
   D. Cabinets, shelving, and casework over 6'-0" shall be anchored to supporting wall or floor construction to resist seismic forces per IBC 1613 and ASCE 7-22 Section 13.5.1. Anchorage shall be designed & sealed by a licensed professional engineer, unless using pre-approved brackets/ clips with verified capacity. Where required by IBC Chapter 17, anchorage installation shall be subject to special inspection (by supplier).
   E. Precast Concrete Elements (by precast supplier)
   F. Seismic Bracing for mechanical, electrical and plumbing components per ASCE 7, Chapter 13 (by MEP consultant)
   G. Seismic Bracing for fire protection components per ASCE 7, Chapter 13 (by supplier)

DESIGN CONTINGENCY AND ADDITIONAL ENGINEERING SERVICES

1. The General Contractor is advised to include costs in their bid to account for the possibility of additional structural engineering services that may be required during the construction phase and are outside the standard scope of the design team contract with the owner. Standard scope items typically include providing structural addenda and clarifications as required, reviewing structural shop drawings for general compliance with the contract documents, assisting bulletins during construction for clarification of the structural drawings, and visiting the site at appropriate times at the request of the architect or owner. Where engineering services outside of these standard services are requested, budgets and contingencies for these services should be established by the general contractor to be used at their discretion during construction. Additional services are listed below and will be billed hourly to the General Contractor at approximately $175/hr.
   A. Redesign services requested to accommodate alternate construction materials, methods, operations, phasing or sequences after the completion of the Contract Documents [hourly]
   B. Services resulting from corrections or revisions required because of deviations from the Contract Documents during construction by the Contractor [Suggested allowance of 0.1% of project budget or $50,000, whichever is lesser, to be billed hourly]
   C. Attendance to weekly construction meeting [hourly plus travel]
   D. Contractor requested site observations or inspections [hourly plus travel]
2. The General Contractor is advised to include costs to account for additional structural design as a contingency for sets priced before drawings are issued for construction, and to share these costs with the owner and the design team throughout the design process. Typical design stages are defined as follows, with a graphic illustration of this contingency:
   A. Schematic Design (SD) – Typically includes a narrative description of building systems and some sketches. If general notes and plans are included, they are preliminary and subject to change.
   B. Design Development (DD) – Typically includes general notes, foundation and framing plans showing general member sizes, the lateral system layout, and typical details. It may not include specific details, connections, or chords/collectors.
   C. Construction Documents (CD) – Typically includes fully detailed plans, including lateral system sizes and miscellaneous framing sufficient to submit for permit.
   D. Issued for construction (IFC) – Typically includes all information needed to build, incorporating the city comments from permit review.

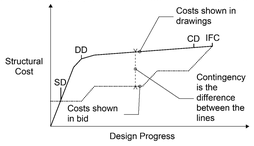

SPECIAL INSPECTION, TESTING AND STRUCTURAL OBSERVATION REQUIREMENTS

1. Special Inspections and Testing
   A. Special inspections and testing as required per the approved construction documents and per IBC Chapter 17 shall be provided for this project unless waived by the Building Official.
   B. An independent agency, or agencies, employed by the Owner, shall perform the special inspection and testing services required.
   C. The special inspection and testing requirements of this section of the General Structural Notes and the special inspection tables serve as DAI's statement of special inspections and structural observations required by IBC Chapter 17.
2. Contractor Responsibilities (1704.4)
   A. Each Contractor responsible for the construction of a main wind or seismic force-resisting system, a designated seismic system, or a wind or seismic force-resisting component listed in the statement of special inspections shall submit a written statement of responsibility to the Building Official and Owner prior to commencing with the work involved. It shall contain acknowledgement of awareness of the special requirements contained in the statement of special inspection.
   B. The Contractor shall coordinate and cooperate with all the required inspections, testing, and/or structural observations required for the project.
   C. The Contractor shall maintain access to and exposure of the work which requires special inspection or testing.
   D. The Contractor shall not proceed with subsequent work until required inspections, testing, and/or structural observations have been provided.
   E. The Contractor shall correct all work found to be deficient, and re-test at no additional cost to the Owner.
   F. The Contractor shall notify DAI at least (7) days prior to any required structural observations.
   G. Submit all required documentation to the Special Inspector for review.
3. Special Inspector Responsibilities (1704.2)
   A. Prior to the start of the construction, each approved agency shall provide written documentation to the Building Official, demonstrating the competence and relevant experience or training of the special inspectors who will perform the special inspections and tests during construction.
   B. Special Inspectors shall keep records of their inspections and testing.
   C. Inspection reports shall indicate whether the work inspected was or was not completed in conformance to the approved construction documents.
   D. Non-conforming work and/or discrepancies shall be brought to the Contractor's immediate attention for correction.
   E. The Special Inspector shall notify the Architect/DAI of any non-conforming work or discrepancies that the Contractor cannot readily correct.
   F. Any uncorrected non-conforming work or discrepancies shall be brought to the attention of the Architect/DAI and the Building Official prior to completion of that phase of the work.
   G. Submit the following to the Building Official:
      1. Special Inspections and Testing Reports.
      2. Certificates of Compliance for:
         a. Fabrication of structural elements from approved fabricators.
         b. The seismic qualifications of nonstructural components, supports, and attachments.
         c. Designated Seismic Systems.
         d. Open-web steel joists and joist girders.
      3. Reports of:
         a. Material properties verifying compliance with the requirements of AWS D1.4 for weldability for reinforcing bars other than ASTM A706.
         b. Mill tests for ASTM A615 reinforcing bars used to resist earthquake induced forces in special moment frames, special structural walls or coupling beams in structures assigned to Seismic Design Category B, C, D, E, or F.
4. Special Inspections (1705)
   A. Special Cases (1705.1.1): Special Inspection and tests shall be required for proposed work that is, in the opinion of the Building Official, unusual in its nature, such as, but not limited to, the following:
      1. Construction materials and systems that are alternatives to materials and systems prescribed by the IBC.
      2. Unusual design applications of materials described in the IBC.
      3. Materials and systems required to be installed in accordance with additional manufacturer's instructions that prescribe requirements not contained in the IBC or in standards referenced by the IBC.
   B. Steel Construction (1705.2): The special inspections and nondestructive testing of steel construction in buildings shall be in accordance with the following:
      1. Structural Steel. Special inspections and non-destructive testing of structural steel elements in buildings, structures, and portions thereof shall be in accordance with the Quality Assurance inspection requirements of AISC 360 and tables in the construction documents. Exception: Railing systems composed of structural steel elements shall be limited to welding inspection of welds at the base of cantilevered rail posts.
   C. Quality Control Submittals for Structural Steel
      1. Provide Level III non-destructive testing (NDT) personnel certifications:
      2. Provide welder qualification records to verify project welders are tested and qualified in accordance with AWS D1.1 before welding structural or miscellaneous steels, D1.3 before welding sheet steels (10 gauge and thinner), and D1.4 before welding reinforcing steel. Submit documentation to the approved inspection agency for review before welding.
         a. Special, restricted welder qualification testing is required for welders joining the bottom-flange through the weld access hole connection in demand critical welds. Qualify welders for the minimum groove angle and maximum deposition rate used in production. Follow the instructions for supplemental qualification testing in AWS D1.8, Section 5.1. Qualification testing must take place within two years from the start of this project.
      3. Provide welder identification methodology. The fabricator/erector shall maintain a system by which the welder who has welded a joint or member can be identified. Stamps, if used, shall be the low stress type.
      4. Provide welding procedures that comply with AWS D1.1, D1.3, D1.4, D1.8, as required by the project. Welding procedures shall be made available to welders and inspectors.
         a. Provide weld filler metal product data sheets identifying optimum welding parameters and storage conditions with each welding procedure submittal.
         b. Identify the maximum welding heat input per inch of weld (KJ/in) permitted by the welding procedures.
         c. Identify the maximum deposition rate that will be used while welding on any demand critical weld.
         d. Provide typical welding filler metal Certificates of Conformance that identify the WPS Heat Input Envelope.
      5. Provide a preliminary welding repair procedure to follow should welding repairs be required within the Seismic Protected Zone.
      6. Provide bolt storage and installation procedures to the approved inspection agency for review.
      7. Provide millmaterial test reports (MTR) or certificates of conformance (CC) that verify compliance of furnished materials to the requirements of the approved contract documents. MTRs or CCs are required for structural shapes, plate, metal deck, fasteners, headed studs, DBAs, weld filler metal, and bolt assemblies used as primary, load-bearing members. Maintain the heat number traceability of structural shapes and plate used as primary, load bearing members.
   D. Structural Steel Non-Destructive Testing (NDT) Personnel Qualifications
      1. NDT personnel will:
         a. Qualify in accordance with the recommended practices of the American Society of Nondestructive Testing, SNT-TC-1A, latest edition.
         b. Pass eye examinations meeting: (1) ASTM requirements at least once a year, and (2) AWS D1.1 every three years.
         c. Be certified in accordance with the AWS QC-1, latest edition.
         d. Level III must be qualified by ASNT testing in the applicable method under review.
      2. Only Level II and Level III technicians, qualified by testing in the applicable method, are permitted to interpret nondestructive testing results.
      3. Only Senior Certified or Certified Welding Inspectors (SCWI, CWI) are permitted to evaluate welds. Certified Associate Welding Inspectors may evaluate welds when under the direct supervision of a SCWI and/or CWI.
      4. Approved Inspection Agency will certify the following:
         a. Level III inspector has reviewed the NDT procedures.
         b. Project ultrasonic testing technicians, testing demand critical welds, are trained and qualified in accordance with AWS D1.8, Annex E.
         c. That the Inspection Agencies' ultrasonic testing procedures are qualified by weld mockups similar to AWS D1.1, Annex S.
   E. Structural Steel: Special inspection and non-destructive testing (NDT) are required during the fabrication and erection of any load-bearing members and assemblies. Special inspection, except NDT, may be waived when the work is performed in a fabricating shop, or by an erector approved by the Building Official to perform work without Special Inspection. NDT of welds completed in an approved fabricator's shop may be performed by the fabricator when approved by the Building Official. When the fabricator performs the NDT, the fabricator shall submit the NDT reports for review by the Special Inspector. Special inspection and NDT shall be provided per the special inspection tables for structural steel in the construction documents.
      1. Perform all welding and welding special inspection activities in accordance with AWS D1.1, D1.3, D1.4, and D1.8, AISC 360 Chapter N, and AISC 341 Chapter J, as appropriate for the material form and welding methods employed. Approved methods and acceptance criteria are established in these codes.
      2. Perform all bolting and bolting inspection activities in accordance with AISC Specification for Structural Joints Using High Strength Bolts, AISC 360 Chapter N, and AISC 341 Chapter J, as applicable.
      3. Non-Destructive Testing (NDT) of welds is required as follows:
         a. Ultrasonic testing (UT), magnetic particle testing (MT), penetrant testing (PT), and radiographic testing (RT), where required, shall be performed in accordance with AWS D1.1/D1.1M. Acceptance criteria shall be in accordance with AWS D1.1/D1.1M for statically loaded structures, unless otherwise designated on the design drawings or project specifications.
         b. All NDT shall be documented. NDT reports shall be distributed to the fabricator/erector, the Building Official, the Contractor, and the Architect.
         c. Amount of NDT is permitted to be reduced according to AISC 360 Chapter N and AISC 341 Chapter J if appropriate criteria are met, and if approved by the Building Official and DAI.
         d. Requirements for structures in Seismic Design Categories C thru F:
            - Ultrasonic test all complete joint penetration groove welds
            - Magnetic particle test or penetrant test all thermally cut surfaces of access holes for flange or web thicknesses exceeding 2", Magnetic particle test or penetrant test all thermally cut surfaces of beam copes access holes for flange or web thicknesses exceeding 1 ½" for members of the seismic force resisting system in Seismic Design Categories C thru F. Any crack shall be deemed unacceptable.
      4. Special inspections and Testing for Non-Shrink Grout are required as follows:
         a. Periodic special inspection verifying the use of required mix design.
         b. Samples of non-shrink grout shall be tested for compressive strength at least daily, with additional tests required for each additional 10 bags mixed per day.
   F. Concrete (1705.3): Special inspections and tests of concrete construction shall be performed in accordance with Table 1705.3 in the construction documents.
      1. Special inspections of welding of and qualifications of special inspectors for reinforcing bars shall be in accordance with the requirements of AWS D1.4 for special inspections and for special inspector qualifications.
      2. In the absence of sufficient data or documentation providing evidence of conformance to quality standards for concrete materials, the building official shall require testing in accordance with the appropriate standards and criteria for the material in Ch. 19&20 of ACI 318.
   G. Masonry (1705.4): Special inspections and tests of masonry construction shall be performed in accordance with the Quality Assurance program requirements of TMS 402 and TMS 602.
      1. Engineered masonry construction in Risk Category IV shall be special inspected per TMS 602, Level 3, Quality Assurance and Tables 3 and 4 in the construction documents.
      2. Empirically designed masonry construction in Risk Category IV shall not be permitted.
      3. Special inspections and tests shall not be required for:
         a. Empirically designed masonry, glass unit masonry or masonry veneer designed in accordance with Section 2109, Section 2110 or Chapter 14, respectively, where they are part of a structure classified as Risk Category I, II or III.
         b. Masonry foundation walls constructed in accordance with Table 1807.1.6.3(1), 1807.1.6.3(2), 1807.1.6.3(3) or 1807.1.6.3(4).
         c. Masonry fireplaces, masonry heaters or masonry chimneys installed or constructed in accordance with Section 2111, 2112 or 2113, respectively.
      4. Special inspections and tests for glass unit masonry or masonry veneer designed in accordance with Section 2110 or Chapter 14, respectively, where they are part of a structure classified as Risk Category IV shall be performed in accordance with TMS 602 Level 2 and Tables 3 and 4 in the construction documents.
   H. Wood (1705.5): Special inspections of prefabricated wood structural elements and assemblies shall be performed in accordance with the Fabricated Items section below. Special inspections of site-built assemblies shall be in accordance with the following:
   I. Soils (1705.6): Special inspections and tests of existing site soil conditions, fill placement and load-bearing requirements shall be performed in accordance with this section and Table 1705.6 in the construction documents. The approved geotechnical report and the construction documents shall be used to determine compliance.
   J. Fabricated Items (1705.11): Where fabrication of structural, load bearing or lateral load-resisting members or assemblies is being conducted on the premises of a fabricator's shop, special inspections of the fabricated items shall be performed during fabrication. Special inspections during fabrication are not required where the work is done on the premises of a fabricator registered and approved by the building official to perform such work without special inspection. Approval shall be based on review of the fabricator's written fabrication procedures and quality control manuals that provide a basis for control of materials and workmanship, with periodic auditing of fabrication and quality control practices by an approved agency or the building official. At the completion of fabrication, the approved fabricators shall submit a certificate of compliance to the Owner for submittal to the Building Official stating that the work was performed in accordance with the approved construction documents.
   K. See architectural drawings for additional required inspections pertaining to sprayed fire-resistant materials (1705.15), mastic and intumescent fire-resistant coatings (1705.16), EIFS (1705.17), fire resistant penetrations and joints (1705.18), or smoke control systems (1705.19).
   L. Post-Installed Anchors: Special inspections and tests shall be performed during installation of post-installed anchors according to the requirements of the ICC Evaluation Report and table 1705.3 in the construction documents.
5. Special Inspections for Wind Resistance (1705.12): Special inspections for wind resistance are not required for this project per IBC Section 1705.12.
6. Special Inspections for Seismic Resistance (1705.13): Special inspections for seismic resistance are required for this project per IBC section 1705.13.
   A. Structural Wood (1705.13.2): For the seismic force-resisting systems of structures assigned to Seismic Design Category C, D, E, or F:
      1. Periodic Special Inspection shall be required for nailing, bolting, anchoring and other fastening of elements of the seismic force-resisting system, including wood shear walls, wood diaphragms, drag struts, braces, shear panels, and hold downs.
      Exception: Special inspections are not required for wood shear walls, shear panels, and diaphragms, including nailing, bolting, anchoring, and other fastening to other elements of the seismic force-resisting system, where the lateral resistance is provided by structural sheathing and the specified fastener spacing is more than 4" on center.
   B. Architectural Components (1705.13.5): Periodic special inspection is required for the erection and fastening of exterior cladding, interior and exterior nonbearing walls and interior and exterior veneer in structures assigned to Seismic Design Category D, E, or F.
   C. Plumbing, Mechanical, and Electrical Components (1705.13.6): Periodic special inspection of plumbing, mechanical, and electrical components shall be required for the following:
      1. Anchorage of electrical equipment for emergency and standby power systems in structures assigned to Seismic Design Category C, D, E, or F.
      2. Anchorage of other electrical equipment is structures assigned to Seismic Design Category E or F.
      3. Installation and anchorage of piping systems designed to carry hazardous materials and their associated mechanical units in structures assigned to Seismic Design Category C, D, E, or F.
      4. Installation and anchorage of ductwork designed to carry hazardous materials in structures assigned to Seismic Design Category C, D, E, or F.
      5. Installation and anchorage of vibration isolated systems in structures assigned to Seismic Design Category C, D, E, or F where the approved construction documents require a nominal clearance of 1/4" or less between the equipment support frame and restraint.
      6. Installation of mechanical and electrical equipment, including duct work, piping systems, and their structural supports, where automatic fire sprinkler systems are installed in structures assigned to Seismic Design Category C, D, E, or F to verify minimum clearances have been maintained. Where flexible sprinkler hose fittings are used, special inspection of minimum clearances is not required.
7. Testing for Seismic Resistance (1705.14): Testing for seismic resistance is required for this project per IBC section 1705.14.
   A. Non-Structural Components (1705.14.2): For structures assigned to Seismic Design Category B, C, D, E, or F where the requirements of ASCE 7 Section 13.2.1 for nonstructural components, supports or attachments are met by seismic qualification as specified in item #2 therein, the registered design professional of the applicable discipline shall specify on the approved construction documents the requirements for seismic qualification by analysis, testing, or experience data. Certificates of Compliance for the seismic qualification shall be submitted to the Building Official.
8. Structural Observations/Site Observations (1704.6): Structural observations are required for this project per IBC section 1704.6.
   A. DAI shall perform the structural observations as required.
   B. Structural Observations of the following stages of construction shall be provided. The Contractor shall notify DAI in writing at least 7 days prior to the following stages of construction so that DAI may have the opportunity to review the work. At the conclusion of the work, a site observation report will be provided stating that the site visits have been made and report any unresolved deficiencies.
      1. Initial placing of any concrete, including but not limited to: footings or slabs on grade
      2. Initial grout pours for masonry walls
      3. Initial erection of structural steel
      4. Completion of structural roof deck
      5. Initial wood framing
      6. Initial finish work
   C. Structural observation/Site observation reports will be provided to the Architect. Distribution to the Contractor, Owner, and/or Building Official will be through the Architect.
9. Seismic/Wind Main Force Resisting Systems That Require Special Inspections
   A. Masonry Shear Walls
   B. Wood Shear Walls
   C. Wood Diaphragms

APRIL 16, 2026
PERMIT SET

NOTE:
THESE STRUCTURAL DRAWINGS ARE BASED ON ARCHITECTURAL DRAWINGS DATED APRIL 16, 2026

DIMENSIONS AND ELEVATIONS, AS THEY RELATE TO THE BUILDING IN GENERAL, i.e. GRID TO GRID DIMENSIONS OR DECK BEARING ELEVATIONS, ARE SUPPLIED BY THE ARCHITECT. THEY ARE PROVIDED ON THE STRUCTURAL PLANS AND DETAILS FOR THE CONVENIENCE OF THE CONTRACTOR. VERIFY DIMENSIONS AND ELEVATIONS WITH ARCHITECTURAL DRAWINGS.

Babcock Design

Salt Lake City
52 Exchange Place
Salt Lake City, UT 84111
801.531.1144

Boise
800 W Main Street, Suite 940
Boise, ID 83702
208.424.7675

babcock**design**.com

Consultant

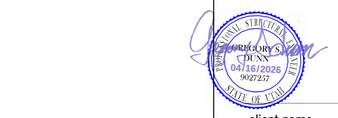

client name

ALPINE FIRE STATION

50 E 100 N ALPINE, UT 84004

Revisions

Num.	Description	Date

Project Number	25116
Original Issue	APRIL 16, 2026
Project Status	PERMIT SET

The information and contnet represented herein is considered by law the architect's instruments of service and are the property of Babcock Design. They are available for limited review and evaluation by clients, consultants, contractors, government agencies, vendors, and office personnel only in accordance with this notice. They are intended for use only for the project specified and are to be used for no other purpose or project including additions to or modification of the completed project. No part thereof may be copied, reproduced, photographed, modified, published, uploaded, transmitted, disclosed, sold, distributed to others in any way including in digital form, or otherwise used without the prior written consent of Babcock Design.

COPYRIGHT © 2025 BABCOCK DESIGN

Stamp

PRELIMINARY
NOT FOR CONSTRUCTION

Sheet Title

GENERAL
STRUCTURAL NOTES

Sheet Number

S-002

Current as of: 1/6/2026 1:37:41 PM

Original drawing is 30" x 42". Autodesk Docs://25116 - ALPINE FIRE STATION 25D/25025B7 Alpine Fire Station_S725.rvt

TABLE 1705.6: REQUIRED SPECIAL INSPECTIONS AND TESTS OF SOILS

TYPE	CONTINUOUS SPECIAL INSPECTION	PERIODIC SPECIAL INSPECTION
1. Verify materials below shallow foundations are adequate to achieve the design bearing capacity.	-	X
2. Verify excavations are extended to proper depth and have reached proper material.	-	X
3. Perform classification and testing of compacted fill materials.	-	X
4. During fill placement, verify use of proper materials and procedures in accordance with the provisions of the approved geotechnical report. Verify densities and lift thicknesses during placement and compaction of compacted fill.	X	-
5. Prior to placement of compacted fill, inspect subgrade and verify that site has been prepared properly.	-	X

TABLE 1705.3: REQUIRED SPECIAL INSPECTIONS AND TESTS OF CONCRETE CONSTRUCTION

TYPE	CONTINUOUS SPECIAL INSPECTION	PERIODIC SPECIAL INSPECTION	REFERENCED STANDARD[a]	IBC REFERENCE
1. Inspect reinforcement, including prestressing tendons, and verify placement	-	X	ACI 318 Ch. 20, 25.2, 25.3, 26.6.1-26.6.3	-
2. Reinforcing bar welding a. Verify weldability of reinforcing bars other than ASTM A 706; b. Inspect single-pass fillet welds, maximum 5/16"; and c. inspect all other welds	 - - X	 X X -	AWS D1.4 ACI 318: 26.6.4	-
3. Inspect anchors cast in concrete.	-	X	ACI 318; 17.8.2	-
4. Inspect anchors post-installed in hardened concrete members.[b] a. Adhesive anchors installed in horizontally or upwardly inclined orientations to resist sustained tension loads b. Mechanical anchors and adhesive anchors not defined in 4.a.	 X -	 - X	 ACI 318: 17.8.2.4 ACI 318: 17.8.2	-
5. Verify use of required design mix.	-	X	ACI 318: Ch 19, 26.4.3, 26.4.4	1904.1, 1904.2
6. Prior to concrete placement, fabricate specimens for strength tests, perform slump and air content tests, and determine the temperature of the concrete.	X	-	ASTM C31 ASTM C172 ACI 318: 26.5, 26.12	-
7. Inspect concrete and shotcrete placement for proper application techniques.	X	-	ACI 318: 26.5	-
8. Verify maintenance of specified curing temperature and techniques.	-	X	ACI 318: 26.5.3-26.5.5	-
9. Inspect prestressed concrete for: a. Application of prestressing forces; and b. Grouting of bonded prestressing tendons.	 X X	 - -	ACI 318: 26.10	-
10. Inspect erection of precast concrete members.	-	X	ACI 318: Ch. 26.9	-
11. For precast concrete diaphragm connections or reinforcement at joints classified as moderate or high deformability elements (MDE or HDE) in structures assigned to Seismic Design Category C, D, E or F, inspect such connections and reinforcement in the field for: a. Installation of the embedded parts b. Completion of the continuity of reinforcement across joints. c. Completion of connections in the field.	 X X X	 - - -	ACI 318: Ch. 26.13.1.3 ACI 550.5	-
12. Inspect installation tolerances of precast concrete diaphragm connections for compliance with ACI 550.5.	-	X	ACI 318: 26.13.1.3	-
13. Verify in-situ concrete strength, prior to stressing of tendons in post-tensioned concrete and prior to removal of shores and forms from beams and structural slabs.	-	X	ACI 318: 26.11.2	-
14. Inspect formwork for shape, location and dimensions of the concrete member being formed.	-	X	ACI 318: 26.11.1.2(b)	-

For SI: 1 inch = 25.4 mm.
a. Where applicable, see Section 1705.12. Special inspection for seismic resistance.
b. Specific requirements for special inspection shall be included in the research report for the anchor issued by an approved source in accordance with 17.8.2 in ACI 318, or other qualification procedures. Where specific requirements are not provided, special inspection requirements shall be specified by the registered design professional and shall be approved by the building official prior to the commencement of the work.

TABLE 3: MASONRY MINIMUM VERIFICATION REQUIREMENTS

MINIMUM VERIFICATION REQUIREMENTS

MINIMUM VERIFICATION	REQUIRED FOR QUALITY ASSURANCE (a)			REFERENCE FOR CRITERIA
	LEVEL 1	LEVEL 2	LEVEL 3	TMS 602
1. Prior to construction, verification of compliance of submittals	R	R	R	Art. 1.5
2. Prior to construction, verification of f 'm and f 'AAC except where specifically exempted by the Code.	NR	R	R	Art. 1.4 B
3. During construction, verification of Slump flow and Visual Stability Index (VSI) when self-consolidating grout is delivered to the project site.	NR	R	R	Art. 1.5 & 1.6.3
4. During construction, verification of f 'm and f 'AAC for every 5,000 sq. ft. (465 sq. m.)	NR	NR	R	Art. 1.4 B
5. During construction,verification of proportions of materials as delivered to the project site for premixed or preblended mortar, prestressing grout, and grout other than self-consolidating grout.	NR	NR	R	Art. 1.4 B

(a) R=Required, NR=Not Required

TABLE 4: MASONRY MINIMUM SPECIAL INSPECTION REQUIREMENTS

MINIMUM SPECIAL INSPECTION

INSPECTION TASK	FREQUENCY(a)			REFERENCE FOR CRITERIA	
	LEVEL 1	LEVEL 2	LEVEL 3	TMS 402	TMS 602
1. As masonry construction begins, verify that the following are in compliance:					
a. Proportions of site-prepared mortar	NR	P	P		Art. 2.1, 2.6 A, & 2.6 C
b. Grade and size of prestressing tendons and anchorages	NR	P	P		Art. 2.4 B & 2.4 H
c. Grade, type and size of reinforcement, connectors, anchor bolts, and prestressing tendons and anchorages	NR	P	P		Art. 3.4 & 3.6 A
d. Prestressing technique	NR	P	P		Art. 3.6 B
e. Properties of thin-bed mortar for AAC masonry	NR	C(b)/P(c)	C		Art. 2.1 C.1
f. Sample panel construction	NR	P	C		Art. 1.6 D
2. Prior to grouting, verify that the following are in compliance:					
a. Grout space	NR	P	C		Art. 3.2 D & 3.2 F
b. Placement of prestressing tendons and anchorages	NR	P	P	Sec. 10.8 & 10.9	Art. 2.4 & 3.6
c. Placement of reinforcement, connectors, and anchor bolts	NR	P	C	Sec. 6.1, 6.3.1, 6.3.6, & 6.3.7	Art. 3.2 E & 3.4
d. Proportions of site-prepared grout and prestressing grout for bonded tendons	NR	P	P		Art. 2.6 B & 2.4 G.1.b
3. Verify compliance of the following during construction:					
a. Materials and procedures with the approved submittals	NR	P	P		Art. 1.5
b. Placement of masonry untis and mortar joint construction	NR	P	P		Art. 3.3 B
c. Size and location of structural members	NR	P	P		Art. 3.3 F
d. Type, size, and location of anchors, including other details of anchorage of masonry to structural members, frames, or other construction	NR	P	C	Sec. 1.2.1(e), 6.2.1, & 6.3.1	
e. Welding of reinforcement	NR	C	C	Sec. 6.1.6.1.2	
f. Preparation, construction, and protection of masonry during cold weather (temperature below 40°F (4.4°C)) or hot weather (temperature above 90°F (32.2°C))	NR	P	P		Art. 1.8 C & 1.8 D
g. Application and measurement of prestressing force	NR	C	C		Art. 3.6 B
h. Placement of grout and prestressing grout for bonded tendons is in compliance	NR	C	C		Art. 3.5 & 3.6 C
i. Placement of AAC masonry units and construction of thin-bed mortar joints	NR	C(b)/P(c)	C		Art. 3.3 B.9 & 3.3F.1.b
4. Observe preparation of grout specimens, mortar specimens, and/or prisms	NR	P	C		Art. 1.4 B.2.a.3, 1.4 B.2.b.3, 1.4 B.2.c.3, 1.4 B.3 & 1.4 B.4

(a) Frequency refers to the frequency of inspection, which may be continuous during the listed task or periodically during the listed task, as defined in the table.
NR=Not Required, P=Periodic, C=Continuous
(b) Required for the first 5000 square feet (465 square meters) of AAC masonry.
(c) Required after the first 5000 square feet (465 square meters) of AAC masonry.

DEFINITION OF INSPECTION TASK ABBREVIATIONS

O	Observe: The inspector shall observe these items on a random, daily basis. Operations need not be delayed pending these inspections.
P	Perform: These inspections shall be performed for each item prior to final acceptance.
D	Document: The inspector shall prepare reports indicating that the work has been performed in accordance with the contract documents. The report need not provide detailed measurements for joint fit-up, WPS settings, completed welds, or other individual items listed in the tables. For shop fabrication, the report shall indicate the piece mark of the piece inspected. For field work, the report shall indicate the reference grid lines and floor or elevation inspected. Work not in compliance with the contract documents and whether the noncompliance has been satisfactorily repaired shall be noted in the inspection report.

TABLE N5.4-1 COMBINED WITH TABLE J6-1 INSPECTION TASKS PRIOR TO WELDING

AISC 360	AISC 341	VISUAL INSPECTION TASKS PRIOR TO WELDING	QC		QA	
			TASK	DOC.	TASK	DOC.
●		Welder qualification records and continuity records	P	-	O	-
●		Welding procedure specification (WPSs) available	P	-	P	-
●		Manufacturer certification for welding consumables available	P	-	P	-
●	●	Material identification (type/grade)	O	-	O	-
●	●	Welder identification system[a]	O	-	O	-
●	●	Fit-up of groove welds (including joint geometry) • Joint preparation • Dimensions (alignment, root opening, root face, bevel) • Cleanliness (condition of steel surfaces) • Tacking (tack weld quality and location) • Backing type and fit (if applicable)	P/O**	-	O	-
●		Fit-up of CJP groove welds of HSS T-, Y-, and K-joints without backing (including joint geometry) • Joint preparation • Dimensions (alignment, root opening, root face, bevel) • Cleanliness (condition of steel surfaces) • Tacking (tack weld quality and location)	P	-	O	-
●	●	Configuration and finish of access holes	O	-	O	-
●	●	Fit-up of fillet welds • Dimensions (alignment, gaps at root) • Cleanliness (condition of steel surfaces) • Tacking (tack weld quality and location)	P/O**	-	O	-
●		Check welding equipment	O	-	O	-

[a]The fabricator or erector, as applicable, shall maintain a system by which a welder who has welded a joint or member can be identified, Stamps, if used, shall be low stress type.

** Follow performance of this inspection task for ten welds to be made by a given welder, with the welder demonstrating understanding of requirements and possession of skills and tools to verify these items, the Perform designation of this task shall be reduced to Observe, and the welder shall perform this task. Should the inspector determine that the welder has discontinued performance of this task, the task shall be returned to Perform until such time as the inspector has re-established adequate assurance that the welder will perform the inspection tasks listed.

TABLE N5.4-2 COMBINED WITH TABLE J6-2 VISUAL INSPECTION TASKS DURING WELDING

AISC 360	AISC 341	VISUAL INSPECTION TASKS DURING WELDING	QC		QA	
			TASK	DOC.	TASK	DOC.
●	●	WPS followed • Settings on welding equipment • Travel speed • Selected welding materials • Shielding gas type/flow rate • Preheat applied • Interpass temperature maintained (min/max) • Proper position (F, V, H, OH) • Intermix of filler metals avoided unless approved	O	-	O	-
	●	Use of qualified welders	O	-	O	-
●	●	Control and handling of welding consumables • Packaging • Exposure control	O	-	O	-
●	●	No welding over cracked tack welds	O	-	O	-
●	●	Environmental conditions • Wind speed within limits • Precipitation and temperature	O	-	O	-
●	●	Welding techniques • Interpass and final cleaning • Each pass within profile limitations • Each pass meets quality requirements	O	-	O	-
●		Placement and installation of steel headed stud anchors	P	-	P	-

TABLE N5.4-3 COMBINED WITH TABLE J6-3 VISUAL INSPECTION TASKS AFTER WELDING

AISC 360	AISC 341	VISUAL INSPECTION TASKS AFTER WELDING	QC		QA	
			TASK	DOC.	TASK	DOC.
●	●	Welds cleaned	O	-	O	-
●	●	Size, length and location of welds	P	-	P	-
●	●	Welds meet visual acceptance criteria • Crack prohibition • Weld/ base-metal fusion • Crater cross section • Weld profiles and size • Undercut • Porosity	P	D	P	D
●		Arc strikes	P	-	P	-
●		*k*-area[1]	P	D	P	D
●		Weld access holes in rolled heavy shapes and built-up heavy shapes[2]	P	-	P	-
	●	Placement of reinforcing or contouring fillet welds (if required)	P	D	P	D
●	●	Backing removed, weld tabs removed and finished, and fillet welds added (if required)	P	D	P	D
●	●	Repair activities	P	-	P	D
●		Document acceptance or rejection of welded joint or member	P	D	P	D
●		No prohibited welds have been added without the approval of the EOR	O	-	O	-

[1.] When welding of doubler plates, continuity plates or stiffeners has been performed in the *k*-area, visually inspect the web *k*-area for cracks within 3 in. (75mm) of the weld, no sooner than 48 hours following weld completion.
[2.] After rolled heavy shapes and built-up heavy shpaes are welded, visually inspect the weld access hole for cracks.

TABLE N5.6-1 COMBINED WITH TABLE J7-1 INSPECTION TASKS PRIOR TO BOLTING

AISC 360	AISC 341	VISUAL INSPECTION TASKS PRIOR TO BOLTING	QC		QA	
			TASK	DOC.	TASK	DOC.
●		Manufacturer's certifications available for fastener materials	O	-	P	-
●		Fasteners marked in accordance with ASTM requirements	O	-	O	-
●	●	Correct fasteners selected for the joint detail (grade, type, bolt length if threads are to be excluded from shear plane)	O	-	O	-
●	●	Correct bolting procedure selected for joint detail	O	-	O	-
●	●	Connecting elements, including the appropriate faying surface condition and hole preparation, if specified, meet applicable requirements	O	-	O	-
●	●	Pre-installation verification testing by installation personnel observed and documented for fastener assemblies and methods used	P	D	O	D
●	●	Proper storage provided for bolts, nuts, washers and other fastener components	O	-	O	-

TABLE N5.6-2 COMBINED WITH TABLE J7-2 INSPECTION TASKS DURING BOLTING

AISC 360	AISC 341	VISUAL INSPECTION TASKS DURING BOLTING	QC		QA	
			TASK	DOC.	TASK	DOC.
●	●	Fastener assemblies of suitable condition placed in all holes and washers (if required) and nuts are positioned as required	O	-	O	-
●	●	Joint brought to the snug-tight condition prior to the pretensioning operation	O	-	O	-
●	●	Fastener component not turned by the wrench prevented from rotating	O	-	O	-
●	●	Fasteners are pretensioned in accordance with the RCSC *Specification* progressing systematically from the most rigid point toward the free edges	O	-	O	-

TABLE N5.6-3 COMBINED WITH TABLE J7-3 INSPECTION TASKS AFTER BOLTING

AISC 360	AISC 341	VISUAL INSPECTION TASKS AFTER BOLTING	QC		QA	
			TASK	DOC.	TASK	DOC.
●	●	Document acceptance or rejection of bolted connections	P	D	P	D

Current as of: 4/16/2026 1:37:41 PM

Original drawing is 30" x 42" Autodesk Docs://25116 - ALPINE FIRE STATION 202/250287 Alpine Fire Station_ST25.rvt

APRIL 16, 2026
PERMIT SET

NOTE:
THESE STRUCTURAL DRAWINGS ARE BASED ON ARCHITECTURAL DRAWINGS DATED APRIL 16, 2026

DIMENSIONS AND ELEVATIONS, AS THEY RELATE TO THE BUILDING IN GENERAL, i.e. GRID TO GRID DIMENSIONS OR DECK BEARING ELEVATIONS, ARE SUPPLIED BY THE ARCHITECT. THEY ARE PROVIDED ON THE STRUCTURAL PLANS AND DETAILS FOR THE CONVENIENCE OF THE CONTRACTOR. VERIFY DIMENSIONS AND ELEVATIONS WITH ARCHITECTURAL DRAWINGS.

Babcock Design

Salt Lake City
52 Exchange Place
Salt Lake City, UT 84111
801.531.1144

Boise
800 W Main Street, Suite 940
Boise, ID 83702
208.424.7675

babcockdesign.com

Consultant

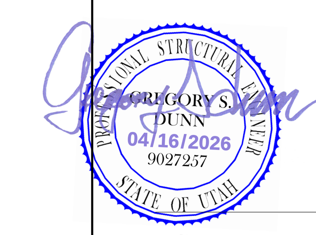

client name

ALPINE FIRE STATION

50 E 100 N ALPINE, UT 84004

Revisions

Num.	Description	Date

Project Number	25116
Original Issue	APRIL 16, 2026
Project Status	PERMIT SET

The information and content represented herein is considered by law the architect's instruments of service and are the property of Babcock Design. They are available for limited review and evaluation by clients, consultants, contractors, government agencies, vendors, and office personnel only in accordance with this notice. They are intended for use only for the project specified and are to be used for no other purpose or project including additions to or modification of the completed project. No part thereof may be copied, reproduced, photographed, modified, published, uploaded, transmitted, disclosed, sold, distributed to others in any way including in digital form, or otherwise used without the prior written consent of Babcock Design.

COPYRIGHT © 2025 BABCOCK DESIGN

Stamp

PRELIMINARY
NOT FOR CONSTRUCTION

Sheet Title

GENERAL STRUCTURAL NOTES

Sheet Number

S-003

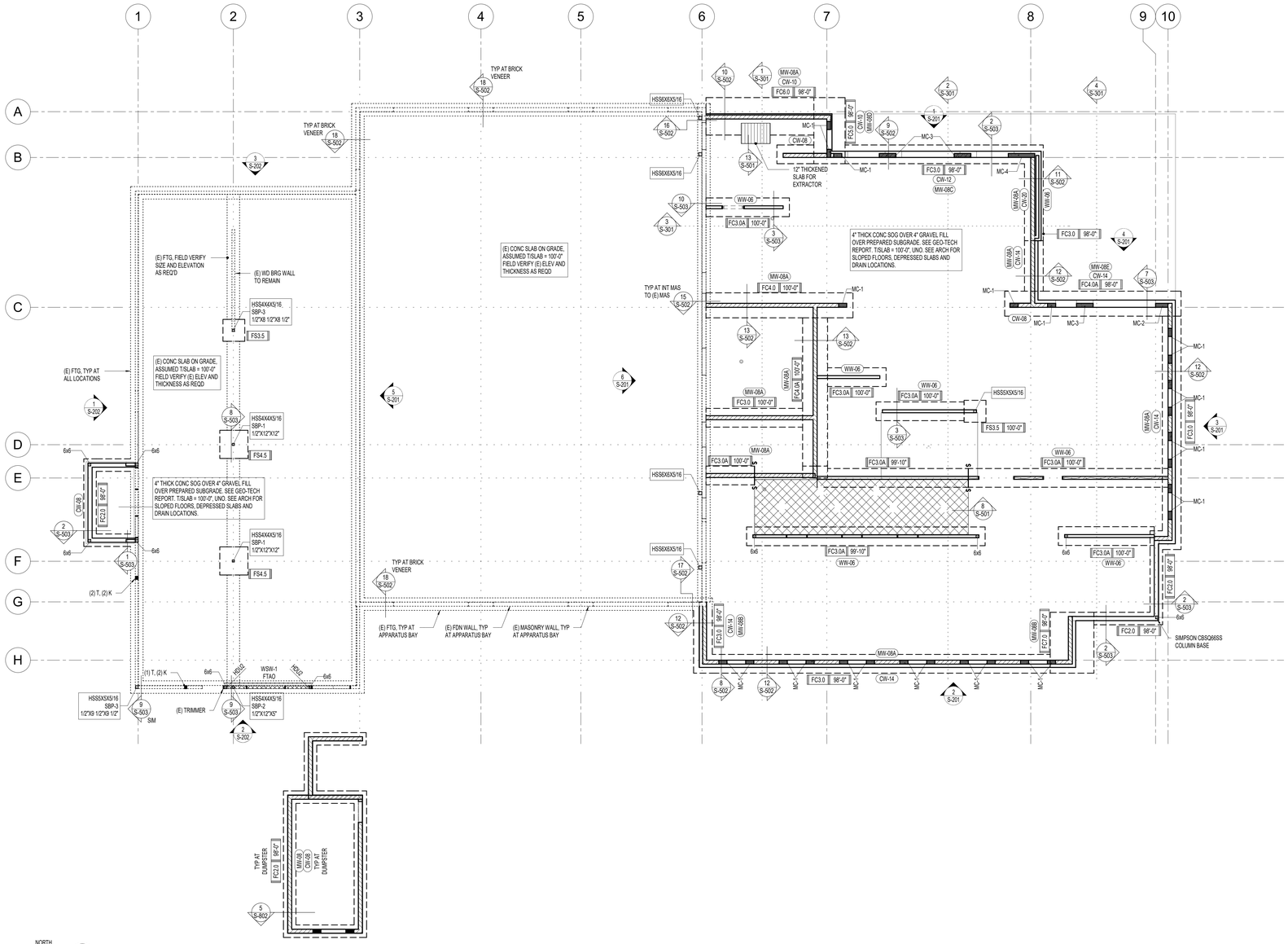

NORTH

1 S-101 FOOTING AND FOUNDATION PLAN
SCALE: 1/8" = 1'-0"

FOOTING & FOUNDATION NOTES

1. THE INFORMATION SHOWN FOR EXISTING CONDITIONS IS TO BE FIELD VERIFIED. IT SHOULD BE ANTICIPATED THAT ADJUSTMENTS WILL BE NECESSARY.
2. THESE DRAWINGS HAVE BEEN PREPARED WITHOUT THE AID OF RECORD DRAWINGS. THE CONTRACTOR SHALL VERIFY THESE DRAWINGS WITH EXISTING CONDITIONS AND NOTIFY THE ARCHITECT/ENGINEER IMMEDIATELY OF INCONSISTENCIES BETWEEN THE DRAWINGS AND ACTUAL CONDITIONS BEFORE PROCEEDING WITH DEMOLITION OR CONSTRUCTION.
3. THE CONTRACTOR SHALL NOTIFY THE OWNER IMMEDIATELY IF ANY WORK INDICATED IN THE CONTRACT DOCUMENTS CANNOT BE PERFORMED DUE TO EXISTING FIELD CONDITIONS.
4. THE CONTRACTOR SHALL NOT CUT STRUCTURAL WORK IN A MANNER RESULTING IN A REDUCTION OF LOAD CARRYING CAPACITY OR LOAD/DEFLECTION RATIO. THE CONTRACTOR SHALL NOTIFY THE ENGINEER OF ALL STRUCTURAL CUTS PRIOR TO EXECUTION SO THAT APPROVAL CAN BE OBTAINED.
5. COORDINATE LOCATION OF DEPRESSED SLABS, SLOPED SLABS, AND FLOOR DRAINS WITH ARCHITECTURAL AND MECHANICAL DRAWINGS.
6. SEE ARCHITECTURAL DRAWINGS AND CIVIL DRAWINGS FOR EXTERIOR CONCRETE WORK AT DOORS, SIDEWALKS, ETC.
7. PER IBC 1809.5.1, PROVIDE CLEAN GRAVEL (NO FINES) DOWN TO FROST DEPTH UNDER EXTERIOR LANDINGS OF ALL REQUIRED EXITS WITH OUTWARD-SWINGING DOORS UNDER THE FOOTPRINT OF THE DOOR SWING.
8. SEE ARCHITECTURAL DRAWINGS FOR DIMENSIONS TO COLUMNS, WALLS, SLAB EDGES, SLOPES, ELEVATIONS, CURBS, DEPRESSIONS AND DRAINS.
9. CENTER ALL SPOT FOOTINGS UNDER COLUMNS AS SHOWN ON PLAN, TYPICAL UNLESS NOTED OTHERWISE.
10. SEE TYPICAL FOUNDATION DETAILS ON SIX SHEET SERIES FOR:
    - STRUCTURAL FILL
    - FROST COVER
    - PIPES PARALLEL TO FOOTINGS
    - PIPES PERPENDICULAR TO FOOTINGS AND WALLS
    - FOOTING STEPS
    - DEPRESSED SLABS
    - SLAB CONSTRUCTION AND CONTROL JOINTS
    - REINFORCING AT SLAB DISCONTINUITIES
    - CORNER BARS IN CONCRETE WALLS
    - REINFORCING AT MISCELLANEOUS OPENINGS AND RECESSES
    - FOUNDATION WALL AT OPENINGS
    - CORNER BARS IN MASONRY WALLS
    - TERMINATION OF HORIZONTAL WALL REINFORCING AT ENDS OF MASONRY WALLS
    - MASONRY CONTROL JOINTS
    - EXTERIOR / PERIMETER WALLS
    - INTERIOR BEARING AND NON-BEARING WALLS
    - SILL PLATE ANCHOR BOLTS
11. SEE SCHEDULES ON 80X SHEET SERIES FOR:
    - FOOTINGS
    - REINFORCING SPLICE LENGTHS
    - CONCRETE WALLS
    - MASONRY WALLS AND COLUMNS
    - MASONRY FREESTANDING WALLS
    - STEEL COLUMNS
    - CONCRETE COLUMNS
    - WOOD BEARING WALLS

MARKS AND SYMBOLS LEGEND

	SECTION MARK SHEET NUMBER
	WALL ELEVATION SHEET NUMBER
FTG EL	FOOTING DESIGNATION TOF ELEVATION
	DEPRESSED FND WALL, POUR SLAB OVER
S S	FOOTING STEP, SEE DETAILS
	FLOOR OFFSET. SEE DETAILS
	DEPRESSED SLAB. SEE ARCHITECTURAL PLANS FOR EXACT LOCATION AND ELEVATION
	CONCRETE WALL
	MASONRY WALL
	WOOD WALL
WSW-x FTAO	WOOD SHEAR WALL AND TYPE ABOVE, DASHED LINE INDICATES SIDE OF SHEATHING. SEE SCHEDULE. FTAO = FORCE TRANSFER AROUND OPENING
	WOOD HOLD DOWN ASSEMBLY, SEE SCHEDULE. CIRCLE INDICATES HOLD DOWN ROD/HARDWARE. RECTANGULAR SHADED REGION INDICATES ESTIMATED COMPRESSION POST ASSEMBLY WIDTH (NO MECH PEN).
□ or I	STEEL COLUMN
	MASONRY COLUMN
⊠	WOOD POST ABOVE, 6x6 BEARING POST, UNO
CJ	CONTROL JOINT
FC-x	CONTINUOUS FOOTING, SEE SCHEDULE
FS-x	SPOT FOOTING, SEE SCHEDULE
MC-x	MASONRY COLUMN, SEE SCHEDULE
HD	CONTINUOUS ROD HOLD-DOWN LOCATION, SEE SCHEDULE
CW-X	CONCRETE WALL, SEE SCHEDULE
WW-X	WOOD WALL, SEE SCHEDULE
MW-X	MASONRY WALL, SEE SCHEDULE
MW-X / CW-X	CONC WALL BLW AND MAS WALL ABV, SEE SCHED

APRIL 16, 2026
PERMIT SET

NOTE:
THESE STRUCTURAL DRAWINGS ARE BASED ON ARCHITECTURAL DRAWINGS DATED APRIL 16, 2026

DIMENSIONS AND ELEVATIONS, AS THEY RELATE TO THE BUILDING IN GENERAL, i.e. GRID TO GRID DIMENSIONS OR DECK BEARING ELEVATIONS, ARE SUPPLIED BY THE ARCHITECT. THEY ARE PROVIDED ON THE STRUCTURAL PLANS AND DETAILS FOR THE CONVENIENCE OF THE CONTRACTOR. VERIFY DIMENSIONS AND ELEVATIONS WITH ARCHITECTURAL DRAWINGS.

Babcock Design

Salt Lake City
52 Exchange Place
Salt Lake City, UT 84111
801.531.1144

Boise
800 W Main Street, Suite 940
Boise, ID 83702
208.424.7675

babcock**design**.com

Consultant

GREGORY'S DUNN 04/16/2026 9027257 STATE OF UTAH PROFESSIONAL STRUCTURAL ENGINEER

client name

ALPINE FIRE STATION

50 E 100 N ALPINE, UT 84004

Revisions

Num.	Description	Date

Project Number	25116
Original Issue	APRIL 16, 2026
Project Status	PERMIT SET

The information and content represented herein is considered by law the architect's instruments of service and are the property of Babcock Design. They are available for limited review and evaluation by clients, consultants, contractors, government agencies, vendors, and office personnel only in accordance with this agreement. They are not to be changed or copied in any form or format whatsoever, nor assigned to any project or project including additions to or modification of the completed project. No part thereof may be copied, reproduced, photographed, modified, published, uploaded, transmitted, disclosed, sold, distributed to others in any way including in digital form, or otherwise used without the prior written consent of Babcock Design.

COPYRIGHT © 2025 BABCOCK DESIGN

Stamp

PRELIMINARY
NOT FOR CONSTRUCTION

Sheet Title

FOOTING AND FOUNDATION PLAN

Sheet Number

S-101

Original drawing is 30" x 42" Autodesk Docs://25116 - ALPINE FIRE STATION 2022/250297 Alpine Fire Station_STZS.rvt

Current as of: 4/16/2026 1:31:42 PM

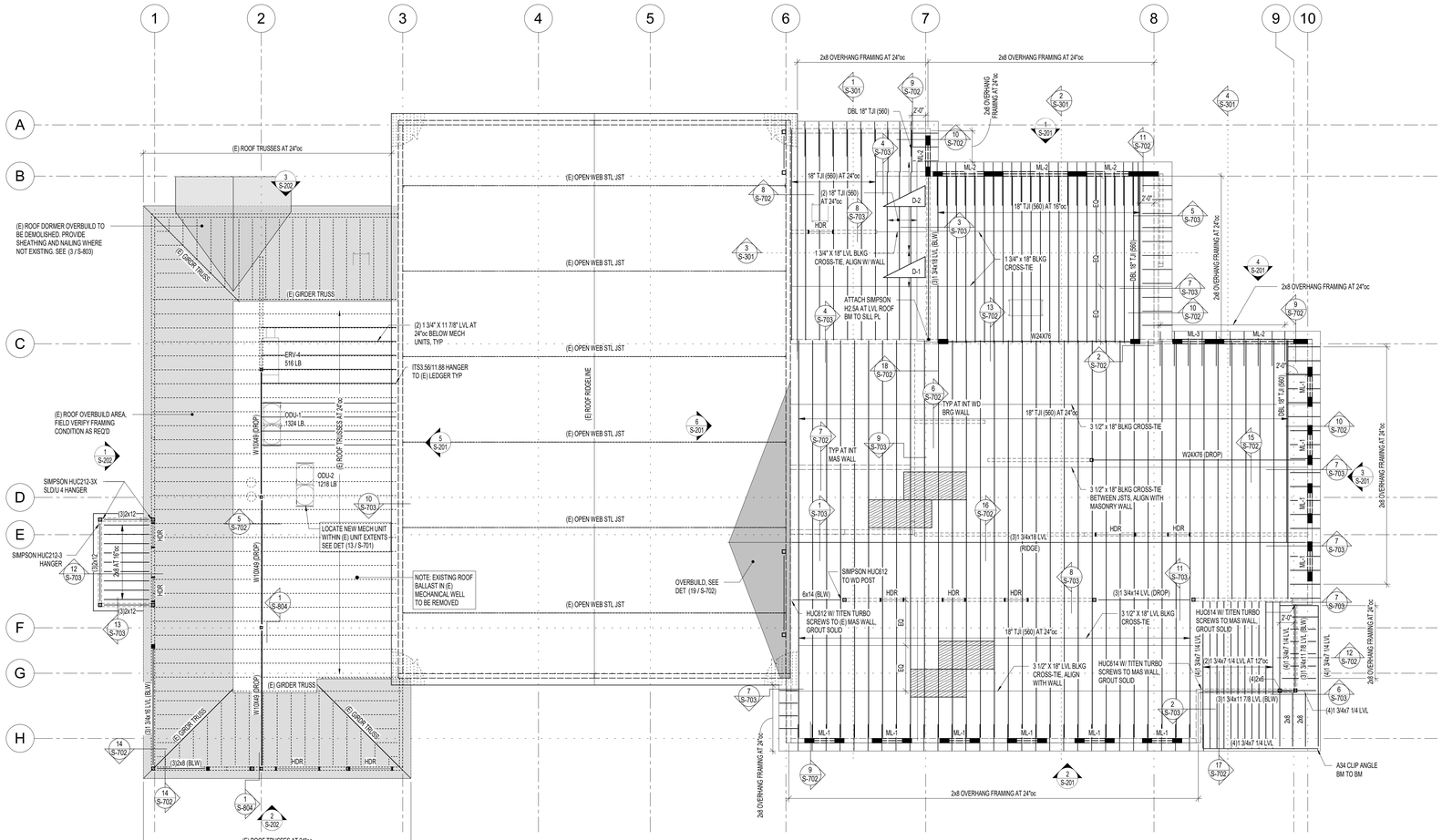

NORTH

1 S-102 ROOF FRAMING PLAN

SCALE: 1/8" = 1'-0"

MASONRY ROOF NOTES

1. THE INFORMATION SHOWN FOR EXISTING CONDITIONS IS TO BE FIELD VERIFIED. IT SHOULD BE ANTICIPATED THAT ADJUSTMENTS WILL BE NECESSARY.
2. THESE DRAWINGS HAVE BEEN PREPARED WITHOUT THE AID OF RECORD DRAWINGS. THE CONTRACTOR SHALL VERIFY THESE DRAWINGS WITH EXISTING CONDITIONS AND NOTIFY THE ARCHITECT/ENGINEER IMMEDIATELY OF INCONSISTENCIES BETWEEN THE DRAWINGS AND ACTUAL CONDITIONS BEFORE PROCEEDING WITH DEMOLITION OR CONSTRUCTION.
3. THE CONTRACTOR SHALL NOTIFY THE OWNER IMMEDIATELY IF ANY WORK INDICATED IN THE CONTRACT DOCUMENTS CANNOT BE PERFORMED DUE TO EXISTING FIELD CONDITIONS.
4. THE CONTRACTOR SHALL NOT CUT STRUCTURAL WORK IN A MANNER RESULTING IN A REDUCTION OF LOAD CARRYING CAPACITY OR LOAD/DEFLECTION RATIO. THE CONTRACTOR SHALL NOTIFY THE ENGINEER OF ALL STRUCTURAL CUTS PRIOR TO EXECUTION SO THAT APPROVAL CAN BE OBTAINED.
5. TYPICAL NEW ROOF FRAMING IS WOOD I-JSTS AT 24"oc (MAX) UNO. SEE ARCH FOR HEIGHT AND SLOPE OF JOISTS. SEE GENERAL STRUCTURAL NOTES FOR ADDITIONAL INFORMATION.
6. WEIGHTS AND LOCATIONS OF MECHANICAL EQUIPMENT SHALL BE SUBMITTED TO ARCHITECT IN WRITING FOR REVIEW PRIOR TO FABRICATION OF OR PLACEMENT OF I-JOISTS OR OTHER FRAMING MEMBERS.
7. WALL STUDS SHALL BE CONTINUOUS BETWEEN POINTS OF LATERAL SUPPORT SUCH AS ROOFS AND FLOORS. PROVIDE TOP PLATES FOR WALLS AT JOIST BEARING AND/OR AT LATERAL BRACING LOCATIONS ONLY. DO NOT PLACE TOP PLATES AT UNBRACED LOCATIONS.
8. BEAMS SHOWN ON THIS SHEET OCCUR WITHIN THE ROOF FRAMING SHOWN (FLUSH-FRAMED), UNO.
9. SEE ARCHITECTURAL DRAWINGS FOR ROOF SLOPES, DRAINS, PARAPETS, DECK BEARING ELEVATIONS, CEILING ELEVATIONS, AND SOFFIT ELEVATIONS.
10. SEE GENERAL STRUCTURAL NOTES FOR ADDITIONAL INFORMATION.
11. SEE ROOF FRAMING DETAILS ON 70X SHEET SERIES FOR:
    - FRAMING AT ROOF OPENINGS
    - NON-BEARING WALL CONNECTIONS
    - BUILT-UP COLUMNS AND BEAMS
    - HOLES AND NOTCHES
    - TOP-PLATE SPLICES / STRAPS
    - BEAM POCKETS
    - STEEL COLUMNS IN WOOD STUD WALLS
    - NON-BEARING WALL CONNECTIONS
    - SHEATHING JOINTS
    - JOIST TO BEAM CONNECTIONS
12. SEE SCHEDULES ON 80X SHEET SERIES FOR:
    - STEEL COLUMNS
    - SINGLE SHEAR BEAM CONNECTIONS (TYPICAL UNO)
    - MASONRY WALLS, COLUMNS, AND LINTELS
    - MINIMUM NAILING
    - BEARING WALLS AND RIM BOARD
    - HEADERS
    - ROOF SHEATHING
    - SUSPENDED CEILINGS

MARKS AND SYMBOLS LEGEND

- SECTION MARK / SHEET NUMBER
- WALL ELEVATION / SHEET NUMBER
- (E) MTL ROOF DECK
- ROOF OR FLOOR SHEATHING ORIENTATION. SEE SCHEDULE AND GENERAL STRUCTURAL NOTES
- MASONRY WALL
- WOOD BRG WALL BLW
- MASONRY BRG WALL BLW
- STEEL COLUMN
- WOOD POST ABOVE, 6x6 BEARING POST, UNO
- ML-x — MASONRY LINTEL, SEE SCHEDULE
- DROP — BEAM OCCURS BELOW FRAMING AT THIS LEVEL
- HDR — WOOD HEADER BELOW FRAMING AT THIS LEVEL, SEE SCHEDULE
- RD — ROOF DRAIN, SEE ARCHITECTURAL AND MECHANICAL FOR EXACT LOCATION

SNOW DRIFT LOADING DIAGRAM (ASD)

D-1	MAX = 27.4 PSF L = 5' - 8"	D-2	MAX = 42.4 PSF L = 8' - 10"

MAX PSF, 0 PSF, D-x, UNIFORM ROOF SNOW LOAD, SEE GSN, 'L'

WHERE 'L' EXCEEDS LENGTH OF LOWER ROOF, DRIFT TAPERS TO 0 PSF AT THE FAR END OF LOWER ROOF

APRIL 16, 2026
PERMIT SET

NOTE:
THESE STRUCTURAL DRAWINGS ARE BASED ON ARCHITECTURAL DRAWINGS DATED: APRIL 16, 2026

DIMENSIONS AND ELEVATIONS, AS THEY RELATE TO THE BUILDING IN GENERAL, i.e. GRID TO GRID DIMENSIONS OR DECK BEARING ELEVATIONS, ARE SUPPLIED BY THE ARCHITECT. THEY ARE PROVIDED ON THE STRUCTURAL PLANS AND DETAILS FOR THE CONVENIENCE OF THE CONTRACTOR. VERIFY DIMENSIONS AND ELEVATIONS WITH ARCHITECTURAL DRAWINGS.

Babcock Design

Salt Lake City
52 Exchange Place
Salt Lake City, UT 84111
801.531.1144

Boise
800 W Main Street, Suite 940
Boise, ID 83702
208.424.7675

babcockdesign.com

Consultant

GREGORY'S DUNN — 04/16/2026 — 90272.57 — PROFESSIONAL STRUCTURAL ENGINEER — STATE OF UTAH

client name

ALPINE FIRE STATION

50 E 100 N ALPINE, UT 84004

Revisions

Num.	Description	Date

Project Number	25116
Original Issue	APRIL 16, 2026
Project Status	PERMIT SET

The information and content represented herein is considered by law the architect's instruments of service and are the property of Babcock Design. They are available for limited review and evaluation by clients, contractors, and public agencies with regulatory authority over the project described herein and may not be altered without notice. They are intended for use only for the project specified and are to be used for no other purpose on project including additions to or modification of the completed project. No part thereof may be copied, reproduced, photographed, modified, published, uploaded, transmitted, disclosed, sold, distributed to others in any way including in digital form, or otherwise used without the prior written consent of Babcock Design.

COPYRIGHT © 2025 BABCOCK DESIGN

Stamp

PRELIMINARY NOT FOR CONSTRUCTION

Sheet Title

ROOF FRAMING PLAN

Sheet Number

S-102

Original drawing is 30" x 42" Autodesk Docs://25116 - ALPINE FIRE STATION 2022/25028? Alpine Fire Station_ST25.rvt

Current as of: 4/16/2026 1:57:43 PM

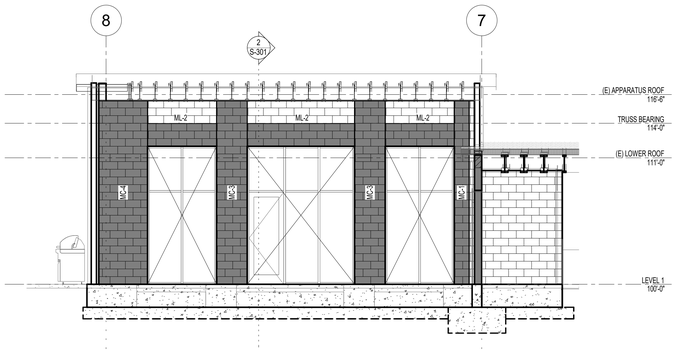

1 S-201 ELEVATION - NORTH EXTERIOR
SCALE: 3/16" = 1'-0"

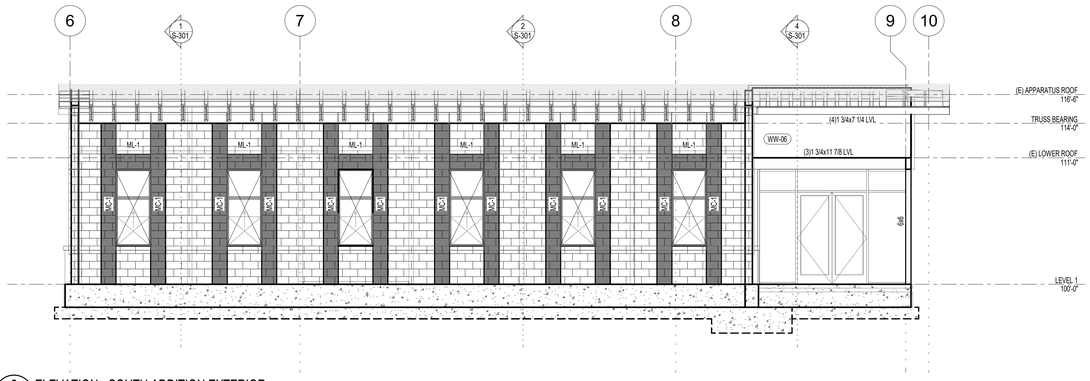

2 S-201 ELEVATION - SOUTH ADDITION EXTERIOR
SCALE: 3/16" = 1'-0"

ELEVATION NOTES

1. SEE GENERAL STRUCTURAL NOTES AND PLANS FOR ADDITIONAL INFORMATION.
2. SEE ARCHITECTURAL DRAWINGS FOR DIMENSIONS TO OPENINGS, WALLS AND ELEVATIONS.
3. SEE SCHEDULES ON (S-800) SHEETS FOR:
   - MASONRY LINTELS
   - MASONRY COLUMNS

MARKS & SYMBOLS LEGEND

	NEW OPENING IN MASONRY WALL
	EXISTING OPENING IN MASONRY WALL TO REMAIN
	INFILL EXISTING OPENING IN MASONRY WALL, SEE DET (6 / S-502)
MC-x	MASONRY COLUMN, SEE SCHEDULE
ML-x	MASONRY LINTEL SEE SCHEDULE

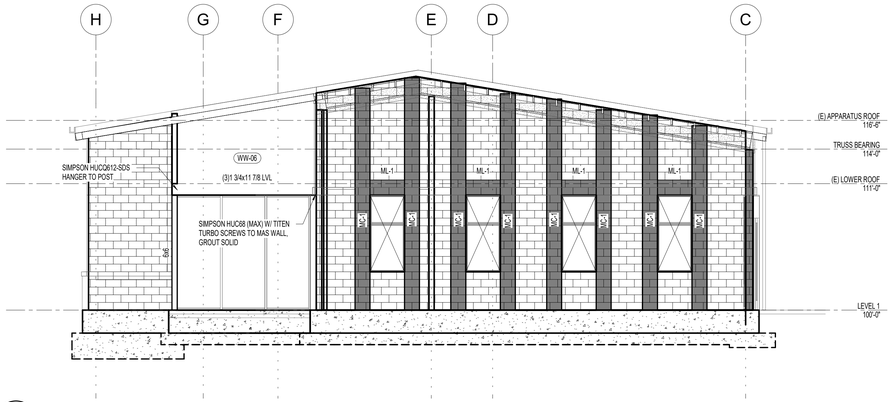

3 S-201 ELEVATION - EAST
SCALE: 3/16" = 1'-0"

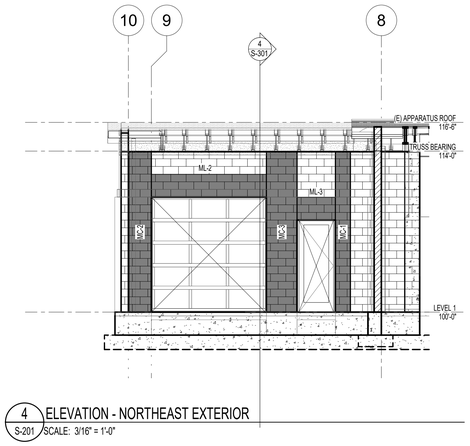

4 S-201 ELEVATION - NORTHEAST EXTERIOR
SCALE: 3/16" = 1'-0"

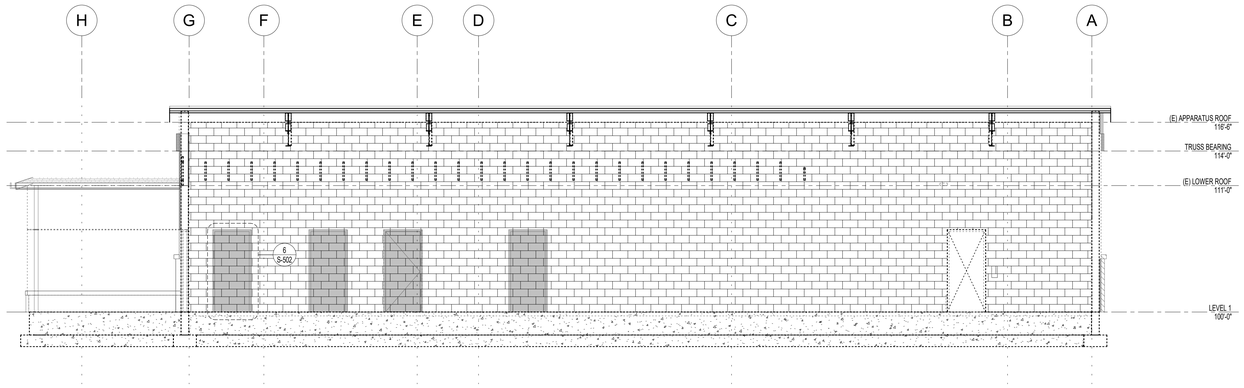

5 S-201 ELEVATION - EXISTING WEST AT APPARATUS BAY
SCALE: 3/16" = 1'-0"

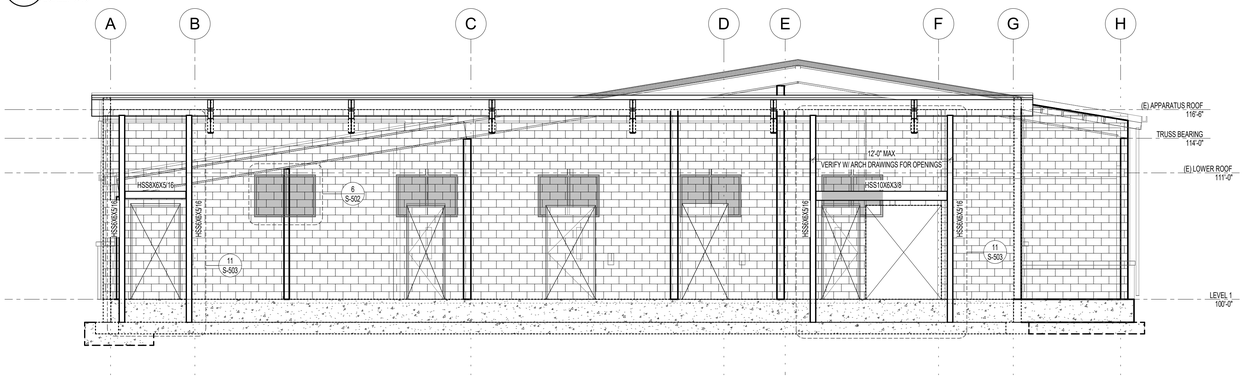

6 S-201 ELEVATION - EXISTING EAST AT APPARATUS BAY
NO SCALE:

Current as of: 4/16/2026 2:57:45 PM

Original drawing is 30" x 42". Autodesk Docs://25116 - ALPINE FIRE STATION 2022/25028? Alpine Fire Station_S725.rvt

Babcock Design

Salt Lake City
52 Exchange Place
Salt Lake City, UT 84111
801.531.1144

Boise
800 W Main Street, Suite 940
Boise, ID 83702
208.424.7675

babcock**design**.com

Consultant

GREGORY S. DUNN
04/16/2026
9027257
PROFESSIONAL STRUCTURAL ENGINEER
STATE OF UTAH

client name

ALPINE FIRE STATION

50 E 100 N ALPINE, UT 84004

Revisions

Num.	Description	Date

Project Number	25116
Original Issue	APRIL 16, 2026
Project Status	PERMIT SET

The information and content represented herein is considered by law the architect's instruments of service and are the property of Babcock Design. They are available for limited review and evaluation by clients, consultants, contractors, government agencies, vendors, and office personnel only in accordance with this notice. They are intended for use only for the project specified and are to be used for no other purpose or project without the written consent of Babcock Design. Unauthorized use, including but not limited to, reproduced, photographed, modified, published, uploaded, transmitted, disclosed, sold, distributed to others in any way including in digital form, or otherwise used without the prior written consent of Babcock Design.

COPYRIGHT © 2025 BABCOCK DESIGN

Stamp

PRELIMINARY
NOT FOR CONSTRUCTION

APRIL 16, 2026
PERMIT SET

NOTE:
THESE STRUCTURAL DRAWINGS ARE BASED ON ARCHITECTURAL DRAWINGS DATED APRIL 16, 2026

DIMENSIONS AND ELEVATIONS, AS THEY RELATE TO THE BUILDING IN GENERAL, i.e. GRID TO GRID DIMENSIONS OR DECK BEARING ELEVATIONS, ARE SUPPLIED BY THE ARCHITECT. THEY ARE PROVIDED ON THE STRUCTURAL PLANS AND DETAILS FOR THE CONVENIENCE OF THE CONTRACTOR. VERIFY DIMENSIONS AND ELEVATIONS WITH ARCHITECTURAL DRAWINGS.

Sheet Title

MASONRY SHEAR WALL ELEVATIONS

Sheet Number

S-201

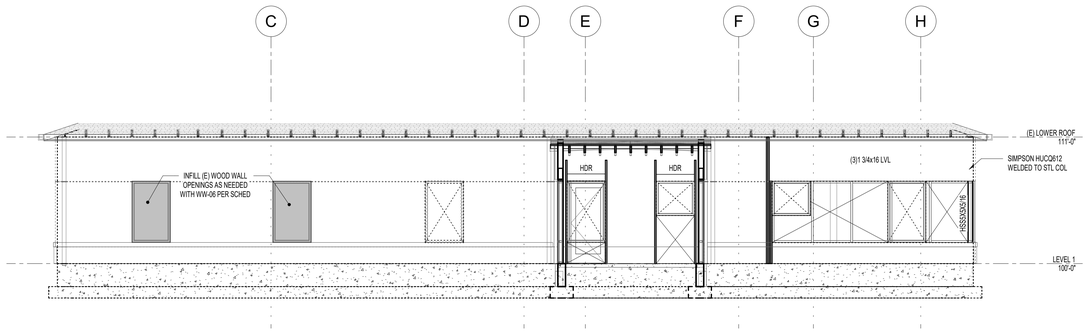

1 S-202 ELEVATION - EXISTING WEST EXTERIOR
SCALE: 3/16" = 1'-0"

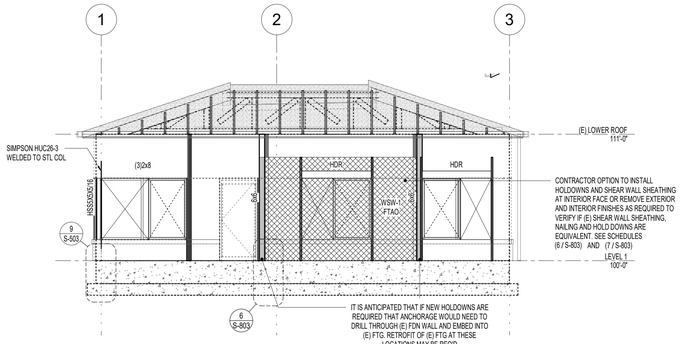

2 S-202 ELEVATION - EXISTING SOUTH EXTERIOR
SCALE: 3/16" = 1'-0"

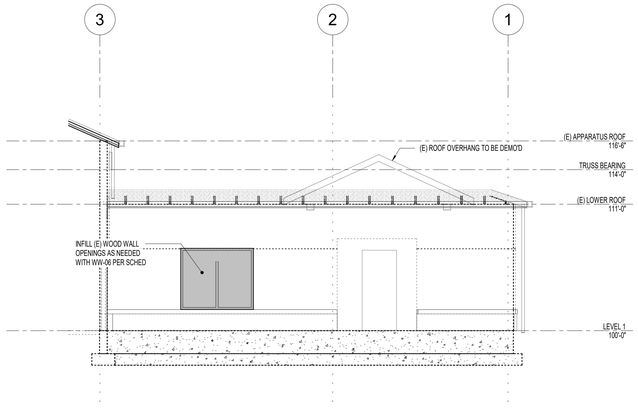

3 S-202 ELEVATION - EXISTING NORTH
NO SCALE:

ELEVATION NOTES

1. SEE GENERAL STRUCTURAL NOTES AND PLANS FOR ADDITIONAL INFORMATION.

MARKS & SYMBOLS LEGEND

- SECTION MARK SHEET NUMBER
- WOOD SHEAR WALL EXTENTS
- WOOD HOLD DOWN ASSEMBLY EXTENTS (NO MECH PEN)
- WSW-x FTAO — WOOD SHEAR WALL AND TYPE, SEE SCHEDULE; FTAO = FORCE TRANSFER AROUND OPENING; PERF = PERFORATED
- NEW OPENING IN WOOD WALL
- EXISTING OPENING IN WOOD WALL TO REMAIN
- INFILL EXISTING OPENING IN WOOD WALL

APRIL 16, 2026
PERMIT SET

NOTE:
THESE STRUCTURAL DRAWINGS ARE BASED ON ARCHITECTURAL DRAWINGS DATED APRIL 16, 2026

DIMENSIONS AND ELEVATIONS, AS THEY RELATE TO THE BUILDING IN GENERAL, i.e. GRID TO GRID DIMENSIONS OR DECK BEARING ELEVATIONS, ARE SUPPLIED BY THE ARCHITECT. THEY ARE PROVIDED ON THE STRUCTURAL PLANS AND DETAILS FOR THE CONVENIENCE OF THE CONTRACTOR. VERIFY DIMENSIONS AND ELEVATIONS WITH ARCHITECTURAL DRAWINGS.

Babcock Design

Salt Lake City
52 Exchange Place
Salt Lake City, UT 84111
801.531.1144

Boise
800 W Main Street, Suite 940
Boise, ID 83702
208.424.7675

babcockdesign.com

Consultant

PROFESSIONAL STRUCTURAL ENGINEER
GREGORY S. DUNN
04/16/2026
9027257
STATE OF UTAH

client name

ALPINE FIRE STATION

50 E 100 N ALPINE, UT 84004

Revisions

Num.	Description	Date

Project Number	25116
Original Issue	APRIL 16, 2026
Project Status	PERMIT SET

The information and content represented herein is considered by law the architect's instruments of service and are the property of Babcock Design. They are available for limited review and evaluation by clients, consultants, contractors, governmental agencies, vendors, and other personnel only in accordance with this notice. They are intended for use only for the project specified and are to be used for no other purpose or project including additions to or modification of the completed project. No part thereof may be copied, reproduced, photographed, modified, published, uploaded, transmitted, disclosed, sold, distributed to others in any way including in digital form, or otherwise used without the prior written consent of Babcock Design.

COPYRIGHT © 2025 BABCOCK DESIGN

Stamp

PRELIMINARY
NOT FOR CONSTRUCTION

Sheet Title

WOOD EXTERIOR WALL ELEVATIONS

Sheet Number

S-202

Current as of: 4/16/2026 1:37:43 PM

Original drawing is 30" x 42" Autodesk Docs://25116 - ALPINE FIRE STATION 202/250287 Alpine Fire Station_ST25.rvt

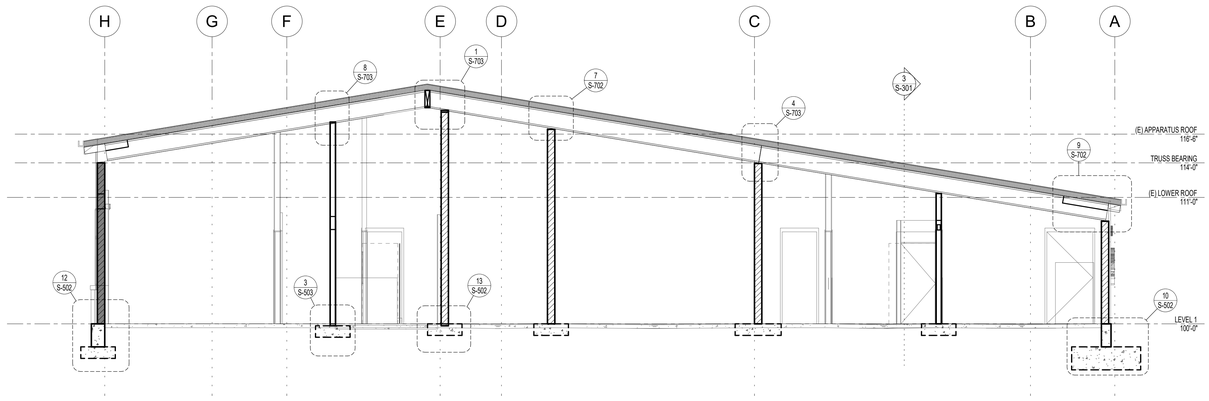

1 S-301 BUILDING SECTION - WEST ADDITION
SCALE: 3/16" = 1'-0"

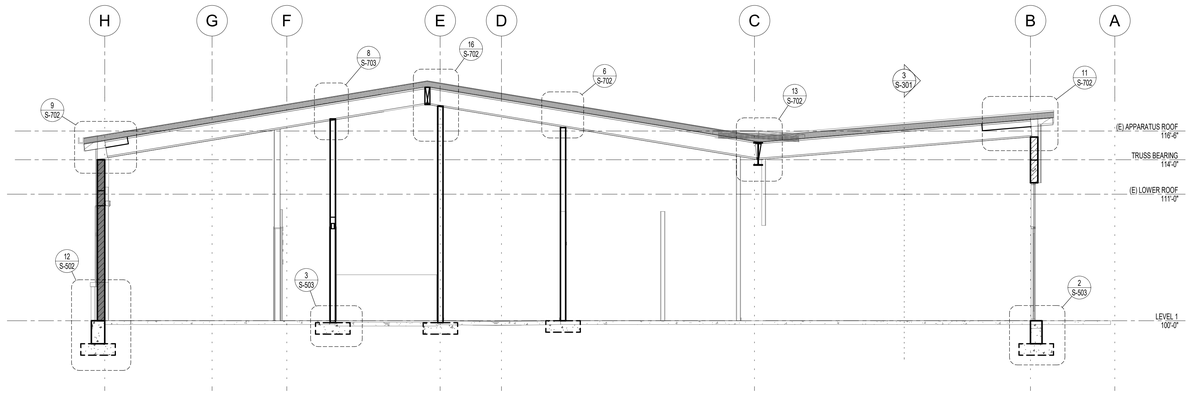

2 S-301 BUILDING SECTION - ADDITION
SCALE: 3/16" = 1'-0"

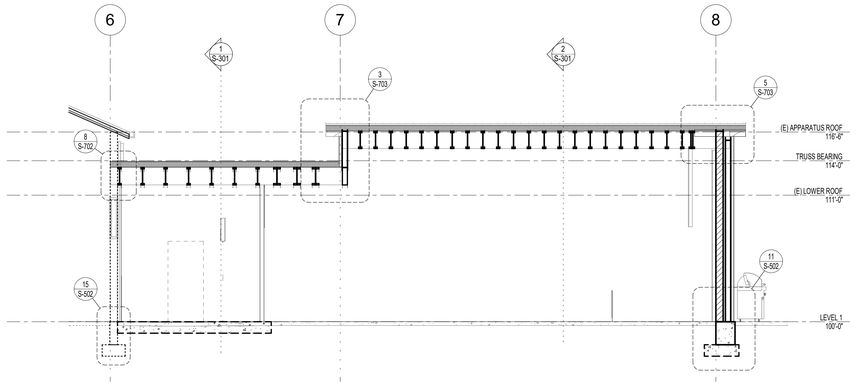

3 S-301 BUILDING SECTION - ADDITION
SCALE: 3/16" = 1'-0"

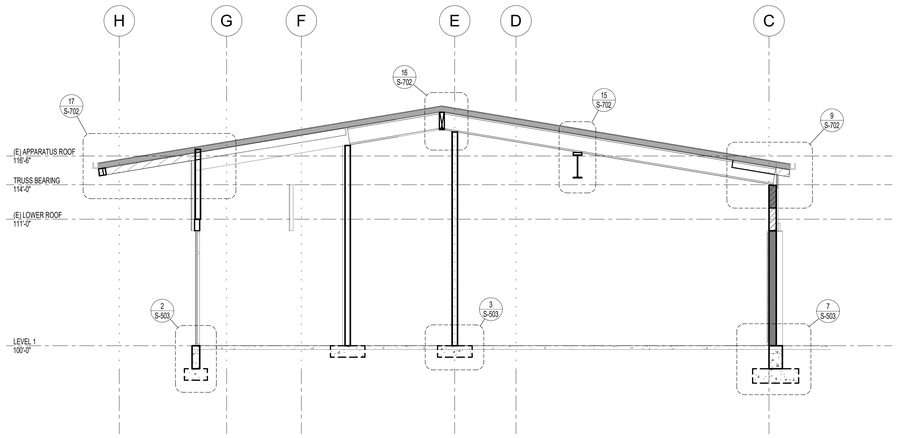

4 S-301 BUILDING SECTION - ADDITION
NO SCALE:

Current as of: 4/16/2026 11:37:40 PM

Original drawing is 30" x 42" Autodesk Docs://25116 - ALPINE FIRE STATION 2022/25025F Alpine Fire Station_ST25.rvt

Babcock Design

Salt Lake City
52 Exchange Place
Salt Lake City, UT 84111
801.531.1144

Boise
800 W Main Street, Suite 940
Boise, ID 83702
208.424.7675

babcock**design**.com

Consultant

PROFESSIONAL STRUCTURAL ENGINEER
GREGORY S. DUNN
04/16/2026
9027252
STATE OF UTAH

client name

ALPINE FIRE STATION

50 E 100 N ALPINE, UT 84004

Revisions

Num.	Description	Date

Project Number	25116
Original Issue	APRIL 16, 2026
Project Status	PERMIT SET

The information and content represented herein is considered by law the architect's instruments of service and are the property of Babcock Design. They are available for limited review and evaluation by clients, contractors, and consultants for project bidding or construction purposes only as agreed to by the terms of this notice. They are intended for use only for the project specified and are to be used for no other purpose or project including additions to or modification of the completed project. No part thereof may be copied, reproduced, photographed, modified, published, uploaded, transmitted, disclosed, sold, distributed to others in any way including in digital form, or otherwise used without the prior written consent of Babcock Design.

COPYRIGHT © 2025 BABCOCK DESIGN

Stamp

PRELIMINARY
NOT FOR CONSTRUCTION

APRIL 16, 2026
PERMIT SET

NOTE:
THESE STRUCTURAL DRAWINGS ARE BASED ON ARCHITECTURAL DRAWINGS DATED: APRIL 16, 2026

DIMENSIONS AND ELEVATIONS, AS THEY RELATE TO THE BUILDING IN GENERAL, i.e. GRID TO GRID DIMENSIONS OR DECK BEARING ELEVATIONS, ARE SUPPLIED BY THE ARCHITECT. THEY ARE PROVIDED ON THE STRUCTURAL PLANS AND DETAILS FOR THE CONVENIENCE OF THE CONTRACTOR. VERIFY DIMENSIONS AND ELEVATIONS WITH ARCHITECTURAL DRAWINGS.

Sheet Title

BUILDING SECTIONS

Sheet Number

S-301

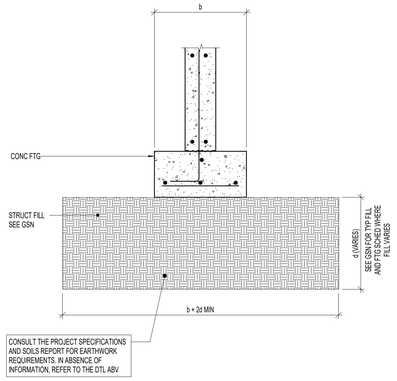

1 S-501 T-010-01 NO SCALE:

TYPICAL COMPACTED STRUCTURAL FILL

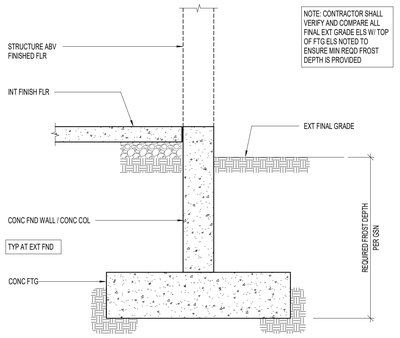

2 S-501 T-010-02 NO SCALE:

TYPICAL FOOTING DEPTH DETAIL FOR FROST PROTECTION

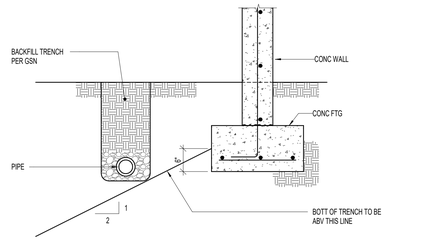

3 S-501 T-010-03 NO SCALE:

TYPICAL PIPE PARALLEL TO FOOTING

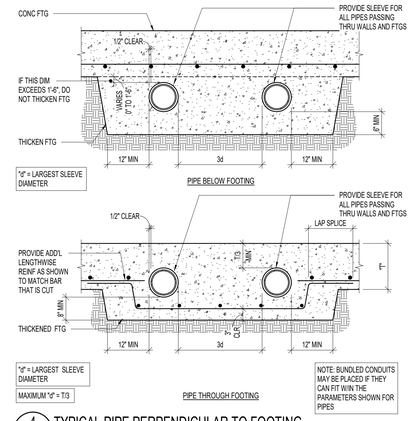

4 S-501 T-010-04 NO SCALE:

TYPICAL PIPE PERPENDICULAR TO FOOTING

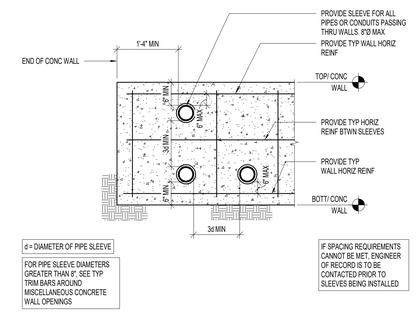

5 S-501 T-010-05 NO SCALE:

TYPICAL SMALL PIPE OR CONDUIT THROUGH CONCRETE WALL

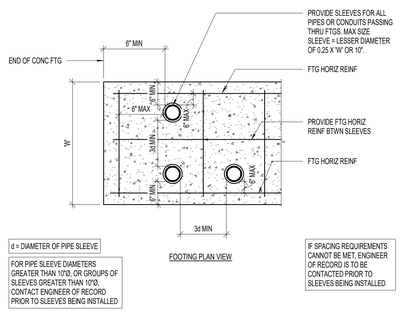

6 S-501 T-010-07 NO SCALE:

TYPICAL VERTICAL SMALL PIPE OR CONDUIT THROUGH CONCRETE FOOTING

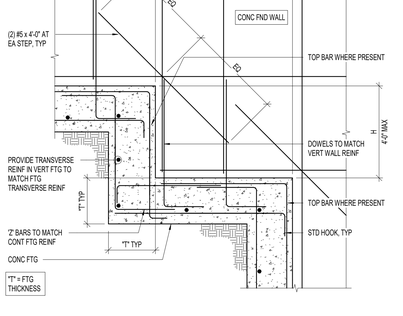

7 S-501 T-010-08 NO SCALE:

TYPICAL FOOTING STEP AT CONCRETE FOUNDATION WALL

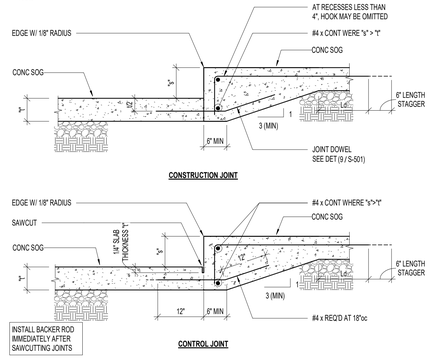

8 S-501 T-010-09 NO SCALE:

TYPICAL UNREINFORCED SLAB ON GRADE DEPRESSION DETAILS

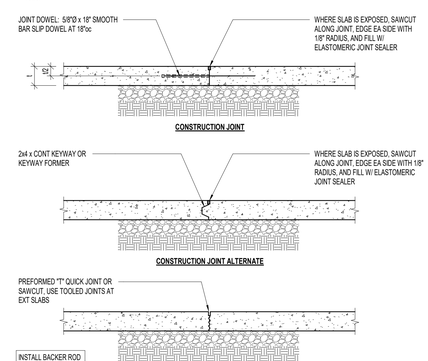

9 S-501 T-010-06 NO SCALE:

TYPICAL NON-STRUCTURAL SLAB ON GRADE JOINTS

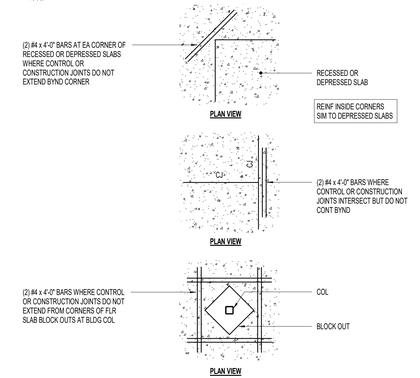

10 S-501 T-010-12 NO SCALE:

TYPICAL SLAB ON GRADE DISCONTINUITIES REQUIRING ADDITIONAL REINFORCING

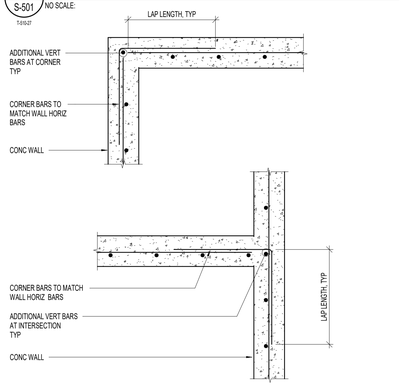

11 S-501 T-010-14 NO SCALE:

TYPICAL CORNER BARS FOR SINGLE REINFORCED CONCRETE WALLS (PLAN VIEW)

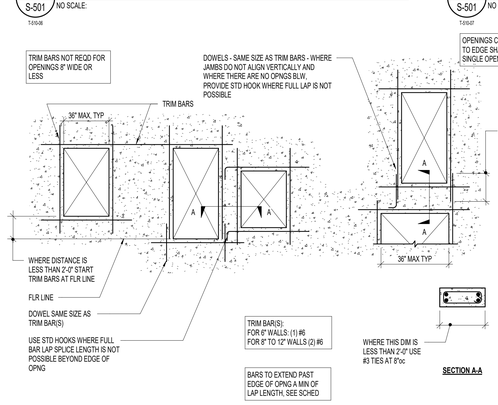

12 S-501 T-010-13 NO SCALE:

TYPICAL TRIM BARS AROUND MISCELLANEOUS CONCRETE WALL OPENINGS UNLESS NOTED OTHERWISE

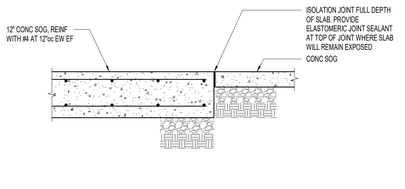

13 S-501 T-010-23 NO SCALE:

TYPICAL UNREINFORCED CONCRETE SLAB ON GRADE THICKNESS TRANSITION

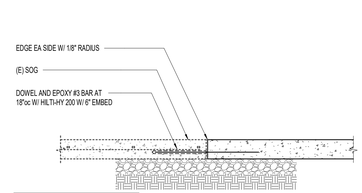

14 S-501 NO SCALE:

NON-STRUCTURAL SLAB ON GRADE JOINT AT EXISTING

Babcock Design

Salt Lake City
52 Exchange Place
Salt Lake City, UT 84111
801.531.1144

Boise
800 W Main Street, Suite 940
Boise, ID 83702
208.424.7675

babcock**design**.com

Consultant

PROFESSIONAL STRUCTURAL ENGINEER GREGORY'S DUNN 04/16/2026 90272J57 STATE OF UTAH

client name

ALPINE FIRE STATION

50 E 100 N ALPINE, UT 84004

Revisions

Num.	Description	Date

Project Number	25116
Original Issue	APRIL 16, 2026
Project Status	PERMIT SET

The information and contnet represented herein is considered by law the architect's instruments of service and are the property of Babcock Design. They are available for limited review and evaluation by clients, consultants, contractors, government agencies, vendors, and office personnel only in accordance with this notice. They are intended for use only for the project specified and are to be used for no other purpose or project including additions to or modification of the completed project. No part thereof may be copied, reproduced, photographed, modified, published, uploaded, transmitted, disclosed, sold, distributed to others in any way including in digital form, or otherwise used without the prior written consent of Babcock Design.

COPYRIGHT © 2025 BABCOCK DESIGN

Stamp

PRELIMINARY NOT FOR CONSTRUCTION

APRIL 16, 2026
PERMIT SET

NOTE:
THESE STRUCTURAL DRAWINGS ARE BASED ON ARCHITECTURAL DRAWINGS DATED APRIL 16, 2026

DIMENSIONS AND ELEVATIONS, AS THEY RELATE TO THE BUILDING IN GENERAL, I.e. GRID TO GRID DIMENSIONS OR DECK BEARING ELEVATIONS, ARE SUPPLIED BY THE ARCHITECT. THEY ARE PROVIDED ON THE STRUCTURAL PLANS AND DETAILS FOR THE CONVENIENCE OF THE CONTRACTOR. VERIFY DIMENSIONS AND ELEVATIONS WITH ARCHITECTURAL DRAWINGS.

Sheet Title

FOOTING AND FOUNDATION DETAILS

Sheet Number

S-501

Original drawing is 30" x 42" Autodesk Docs://25116 - ALPINE FIRE STATION 25D/25D787 Alpine Fire Station_ST25.rvt
Current as of: 1/6/2026 1:37:47 PM

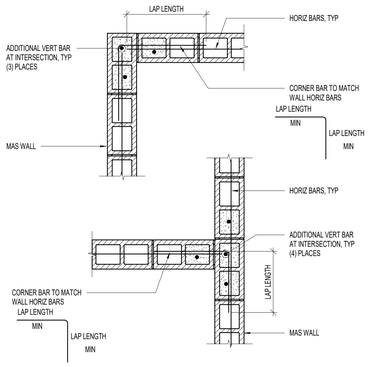

1 S-502 — TYPICAL CORNER WALL REINFORCING FOR SINGLE REINFORCED MASONRY WALLS (PLAN VIEW)

NO SCALE:

T-501-01

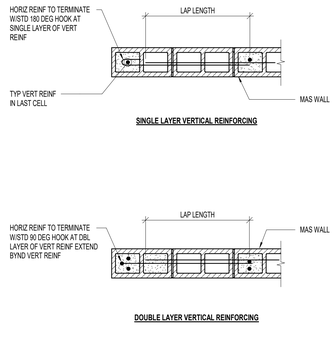

2 S-502 — TYPICAL TERMINATION OF HORIZONTAL REINFORCING FOR REINFORCED MASONRY WALLS (PLAN VIEW)

NO SCALE:

T-560-02

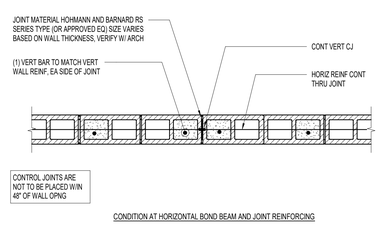

3 S-502 — TYPICAL CONTROL JOINT FOR SINGLE REINFORCED MASONRY WALLS (PLAN VIEW)

NO SCALE:

T-560-03

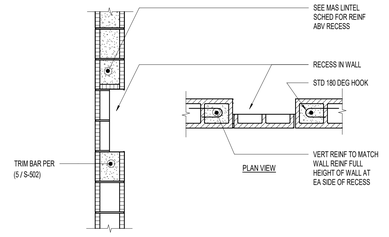

4 S-502 — TYPICAL MASONRY WALL RECESS DETAILS FOR SINGLE REINFORCED MASONRY WALLS (PLAN VIEW)

NO SCALE:

T-560-05

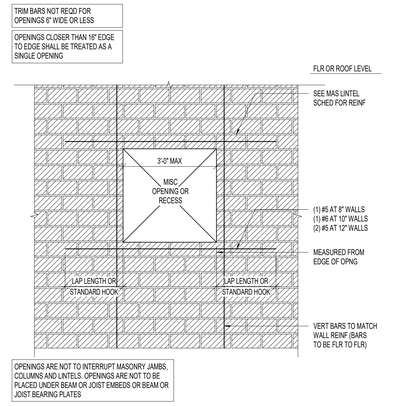

5 S-502 — TYPICAL REINFORCING DETAIL FOR MISCELLANEOUS MASONRY WALL OPENINGS AND RECESSES

NO SCALE:

T-560-11

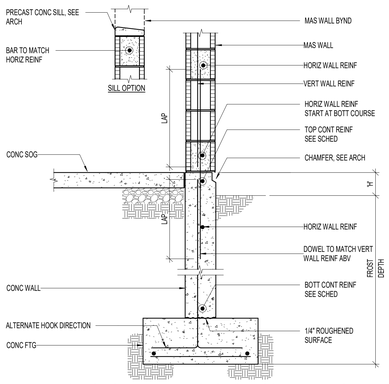

7 S-502 — TYPICAL SINGLE MAT REINFORCING MASONRY WALL ON CONCRETE FOUNDATION WALL

NO SCALE:

T-561-04

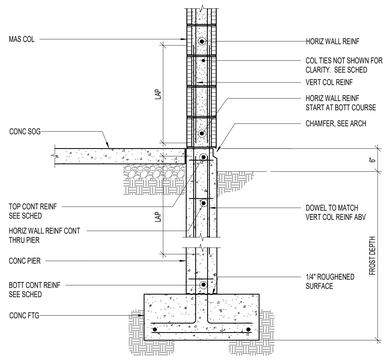

8 S-502 — TYPICAL MASONRY COLUMN ON CONCRETE FOUNDATION WALL

NO SCALE:

T-561-05

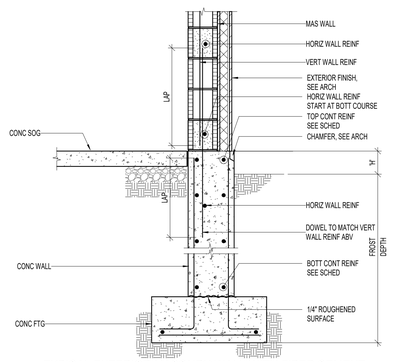

9 S-502 — TYPICAL EXTERIOR MASONRY WALL WITH FIBER CEMENT BOARD FINISH

NO SCALE:

T-561-04

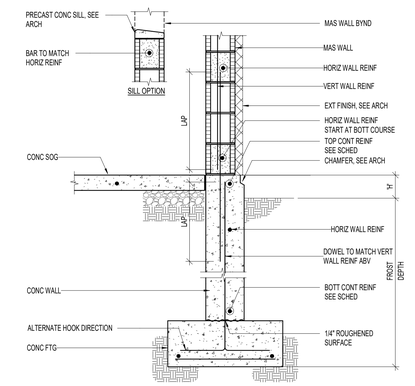

10 S-502 — TYPICAL EXTERIOR MASONRY WALL WITH EIFS

NO SCALE:

T-561-04

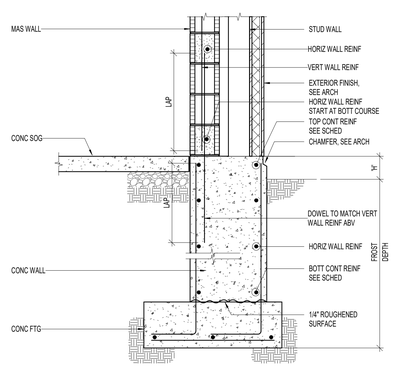

11 S-502 — TYPICAL EXTERIOR MASONRY AND WOOD WALL

NO SCALE:

T-561-04

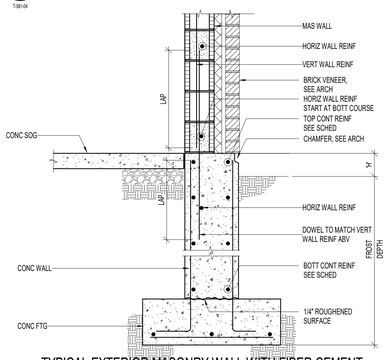

12 S-502 — TYPICAL EXTERIOR MASONRY WALL WITH FIBER CEMENT BOARD FINISH

NO SCALE:

T-561-04

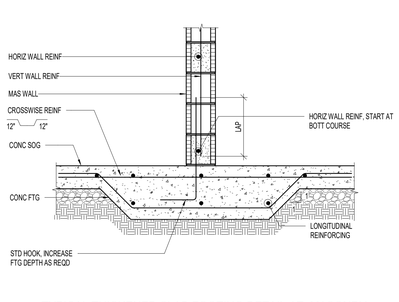

13 S-502 — TYPICAL THICKENED SLAB FOOTING DETAIL AT MASONRY WALLS

NO SCALE:

T-561-06

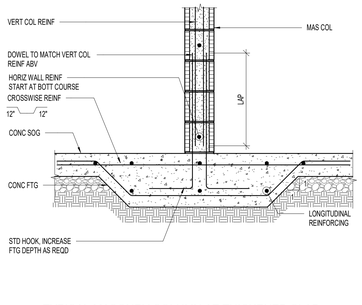

14 S-502 — TYPICAL MASONRY COLUMN AT THICKENED SLAB FOOTING

NO SCALE:

T-561-02

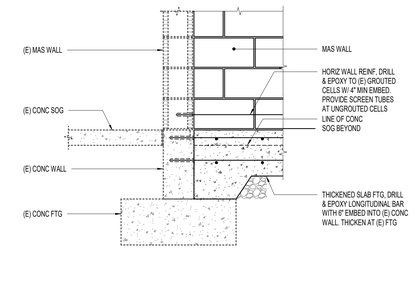

15 S-502 — TYPICAL INTERIOR MASONRY WALL TO (E) MASONRY

NO SCALE:

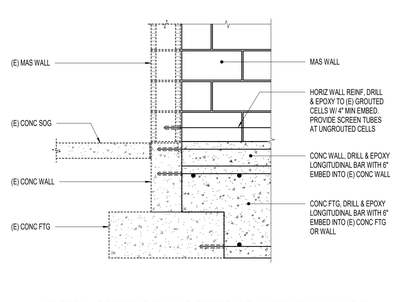

16 S-502 — TYPICAL PERPENDICULAR EXTERIOR MASONRY WALL TO (E) MASONRY

NO SCALE:

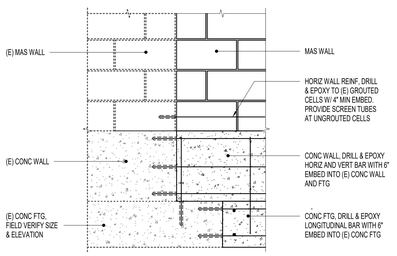

17 S-502 — TYPICAL PARALLEL EXTERIOR MASONRY WALL TO (E) MASONRY

NO SCALE:

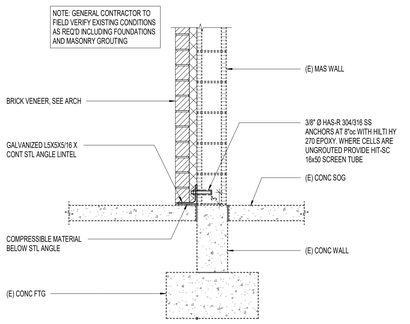

18 S-502 — BRICK VENEER SUPPORT AT EXISTING MASONRY WALL

NO SCALE:

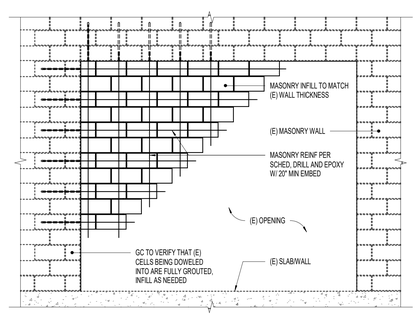

6 S-502 — INFILLED OPENINGS IN EXISTING MASONRY WALL

NO SCALE:

T-271-03

Current as of: 4/15/2026 1:37:48 PM

Original drawing is 30" x 42". Autodesk Docs://25116 - ALPINE FIRE STATION 2022/25028? Alpine Fire Station_ST25.rvt

Babcock Design

Salt Lake City
52 Exchange Place
Salt Lake City, UT 84111
801.531.1144

Boise
800 W Main Street, Suite 940
Boise, ID 83702
208.424.7675

babcock**design**.com

Consultant

PROFESSIONAL STRUCTURAL ENGINEER — GREGORY S. DUNN — 04/16/2026 — 9027257 — STATE OF UTAH

client name

ALPINE FIRE STATION

50 E 100 N ALPINE, UT 84004

Revisions

Num.	Description	Date

Project Number	25116
Original Issue	APRIL 16, 2026
Project Status	PERMIT SET

The information and content represented herein is considered by law the architect's instruments of service and are the property of Babcock Design. They are available for limited review and publication by clients, governmental agencies, and authorities having jurisdiction over the project and as required by law or this notice. They are intended for use only for the project specified and are to be used for no other purpose or project including additions to or modification of the completed project. No part thereof may be copied, reproduced, photographed, modified, published, uploaded, transmitted, disclosed, sold, distributed to others in any way including in digital form, or otherwise used without the prior written consent of Babcock Design.

COPYRIGHT © 2025 BABCOCK DESIGN

Stamp

PRELIMINARY
NOT FOR CONSTRUCTION

APRIL 16, 2026
PERMIT SET

NOTE:
THESE STRUCTURAL DRAWINGS ARE BASED ON ARCHITECTURAL DRAWINGS DATED APRIL 16, 2026

DIMENSIONS AND ELEVATIONS, AS THEY RELATE TO THE BUILDING IN GENERAL, i.e. GRID TO GRID DIMENSIONS OR DECK BEARING ELEVATIONS, ARE SUPPLIED BY THE ARCHITECT. THEY ARE PROVIDED ON THE STRUCTURAL PLANS AND DETAILS FOR THE CONVENIENCE OF THE CONTRACTOR. VERIFY DIMENSIONS AND ELEVATIONS WITH ARCHITECTURAL DRAWINGS.

Sheet Title

FOOTING AND FOUNDATION DETAILS

Sheet Number

S-502

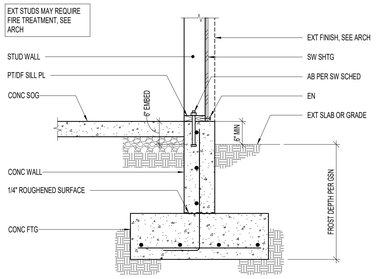

1 S-503 TYPICAL PERIMETER WALL
NO SCALE:
1-503-07

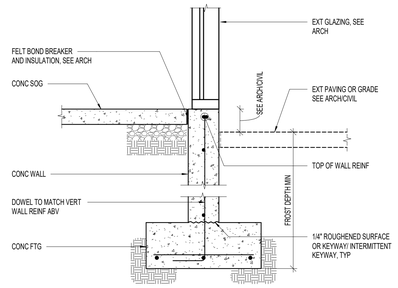

2 S-503 TYPICAL FOUNDATION WALL AT BUILDING EXTERIOR GLAZING
NO SCALE:

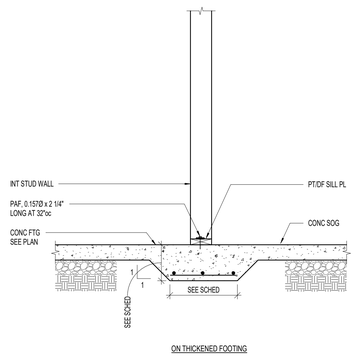

ON THICKENED FOOTING

3 S-503 TYPICAL INTERIOR BEARING WALL
NO SCALE:
1-503-01

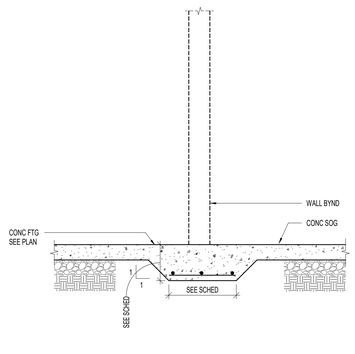

4 S-503 TYPICAL INTERIOR FOOTING AT WALL OPENING
NO SCALE:
1-503-02

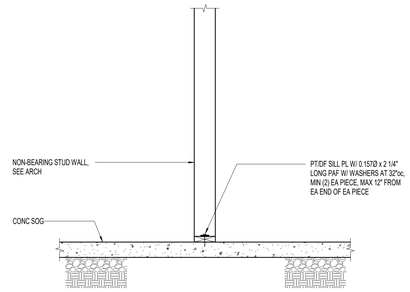

5 S-503 TYPICAL NON-BEARING WALL AT SLAB ON GRADE
NO SCALE:
1-503-06

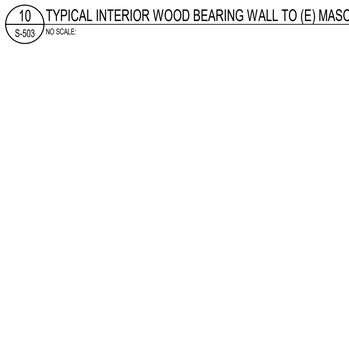

6 S-503 TYPICAL SILL PLATE BOLTING TO CONCRETE (PLAN VIEW)
NO SCALE:
1-503-10

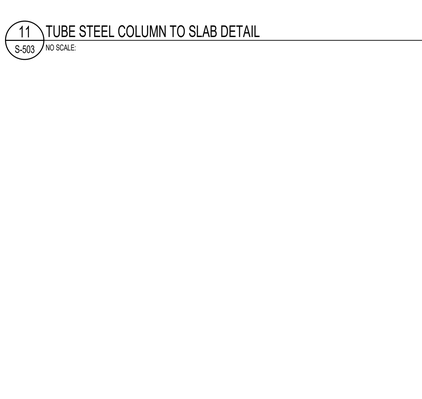

7 S-503 FOUNDATION WALL AT OPENING DETAIL
NO SCALE:
1-503-17

8 S-503 TYPICAL TUBE STEEL COLUMN TO CONCRETE FOOTING
NO SCALE:

9 S-503 STEEL COLUMN BASE AT EXISTING WALL
NO SCALE:

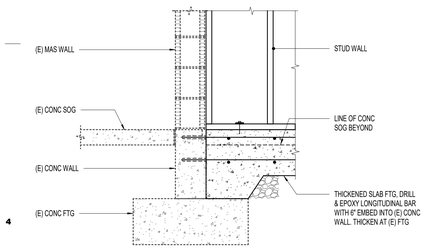

10 S-503 TYPICAL INTERIOR WOOD BEARING WALL TO (E) MASONRY
NO SCALE:

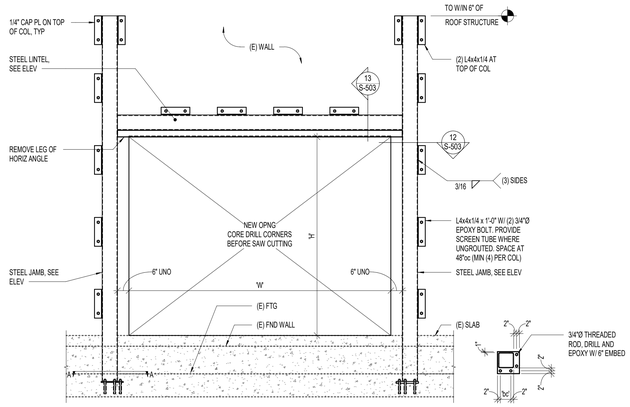

11 S-503 TUBE STEEL COLUMN TO SLAB DETAIL
NO SCALE:

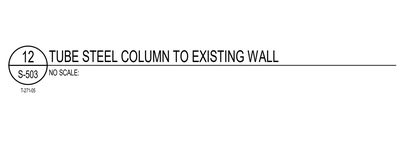

12 S-503 TUBE STEEL COLUMN TO EXISTING WALL
NO SCALE:
1-27-05

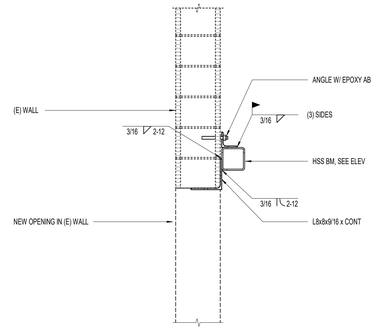

13 S-503 TUBE STEEL HEADER TO EXISTING WALL DETAIL
NO SCALE:
1-27-05

Babcock Design

Salt Lake City
52 Exchange Place
Salt Lake City, UT 84111
801.531.1144

Boise
800 W Main Street, Suite 940
Boise, ID 83702
208.424.7675

babcock**design**.com

Consultant

GREGORY S. DUNN — 04/16/2026 — 9027257 — PROFESSIONAL STRUCTURAL ENGINEER — STATE OF UTAH

client name

ALPINE FIRE STATION

50 E 100 N ALPINE, UT 84004

Revisions

Num.	Description	Date

Project Number	25116
Original Issue	APRIL 16, 2026
Project Status	PERMIT SET

The information and content represented herein is considered by law the architect's instruments of service and are the property of Babcock Design. They are available for limited review and evaluation by clients, contractors, and public agencies with regard to this project and are not to be used otherwise without this notice. They are intended for use only for the project specified and are to be used for no other purpose on project including additions to or modification of the completed project. No part thereof may be copied, reproduced, photographed, modified, published, uploaded, transmitted, disclosed, sold, distributed to others in any way including in digital form, or otherwise used without the prior written consent of Babcock Design.

COPYRIGHT © 2025 BABCOCK DESIGN

Stamp

PRELIMINARY NOT FOR CONSTRUCTION

APRIL 16, 2026
PERMIT SET

NOTE:
THESE STRUCTURAL DRAWINGS ARE BASED ON ARCHITECTURAL DRAWINGS DATED: APRIL 16, 2026

DIMENSIONS AND ELEVATIONS, AS THEY RELATE TO THE BUILDING IN GENERAL, i.e. GRID TO GRID DIMENSIONS OR DECK BEARING ELEVATIONS, ARE SUPPLIED BY THE ARCHITECT. THEY ARE PROVIDED ON THE STRUCTURAL PLANS AND DETAILS FOR THE CONVENIENCE OF THE CONTRACTOR. VERIFY DIMENSIONS AND ELEVATIONS WITH ARCHITECTURAL DRAWINGS.

Sheet Title

FOOTING AND FOUNDATION DETAILS

Sheet Number

S-503

Current at: 4/16/2026 1:57:49 PM
Original drawing is 30" x 42" Autodesk Docs://25116 - ALPINE FIRE STATION 2022/25026T Alpine Fire Station_ST25.rvt

TYPICAL BUILT-UP 2x WOOD COLUMN CONNECTIONS

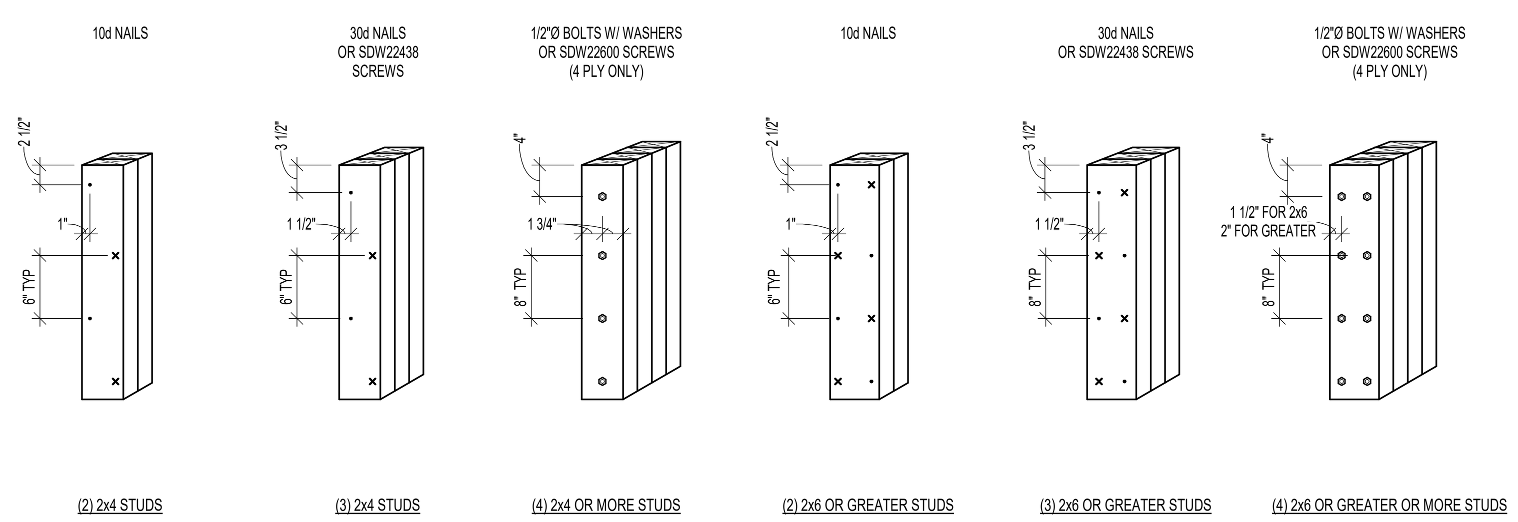

• = NAIL NEAR SIDE
× = NAIL FAR SIDE

THIS DTL DOES NOT APPLY TO MULTIPLE STUDS IN SHEATHED WALL. AT MULTIPLE STUDS IN WALLS PROVIDE (1) ROW 16d NAILS AT 8"oc IN 2x4 WALLS OR (2) ROWS 16d NAILS AT 8"oc IN 2x6 OR 2x8 WALLS.

1 S-701 TYPICAL BUILT-UP 2x WOOD COLUMN CONNECTIONS
NO SCALE:
T-650-01

WOOD BEAM NOTES:
1. BUILT-UP LVL BEAMS SHALL BE CONNECTED PER MANUFACTURER'S GUIDELINES.

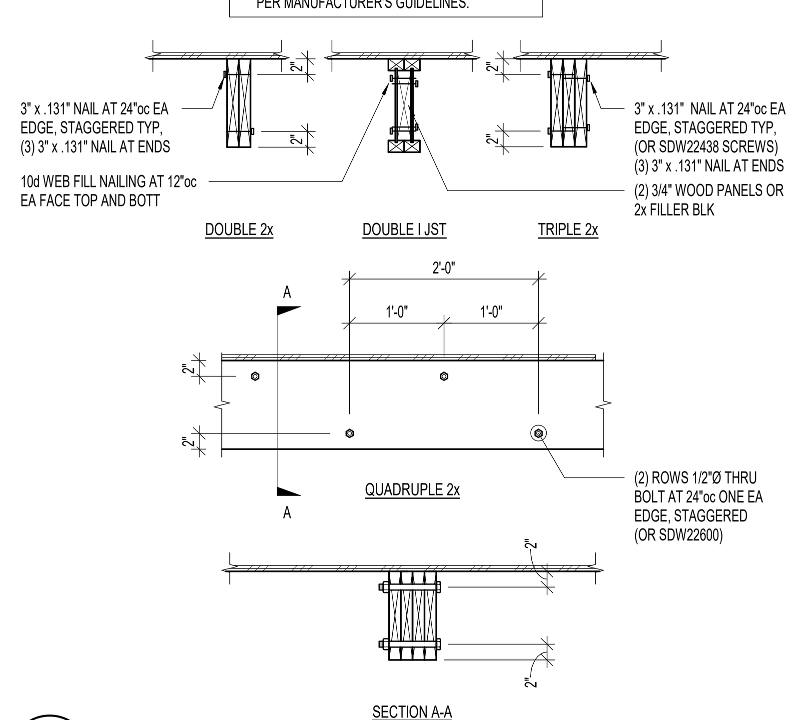

2 S-701 TYPICAL BUILT-UP WOOD BEAM CONNECTIONS
NO SCALE:
T-650-02

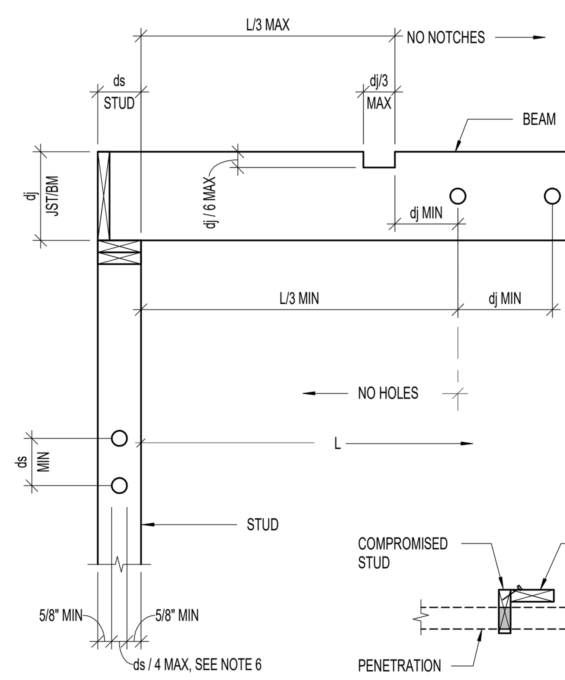

1. L = CLEAR SPAN OF JST / BEAM.
2. NO NOTCHING PERMITTED IN STUDS.
3. NO HOLES OR NOTCHES PERMITTED IN BEAMS WHICH ARE LESS THAN 6" DEEP.
4. NO NOTCHES IN GLU-LAMS WITHOUT PRIOR APPROVAL FROM ENGINEER.
5. FOR LVL AND I-JST, REFER TO MANUFACTURERS REQUIREMENTS.
6. FOR HOLES IN STUDS EXCEEDING ds/4, SISTER ADDITIONAL EQUAL STUD AS SHOWN FOR EACH COMPROMISED STUD.

3 S-701 TYPICAL PERMITTED NOTCHES AND HOLES
NO SCALE:
T-650-03

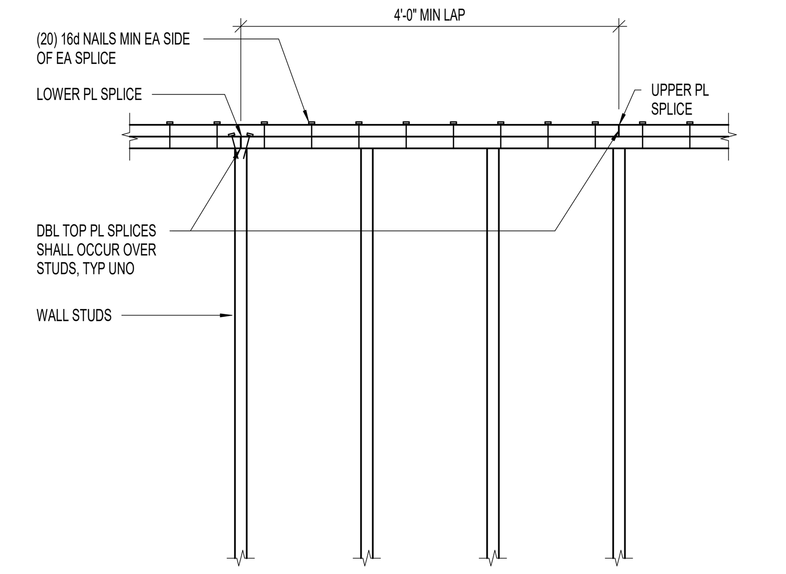

4 S-701 TYPICAL TOP PLATE SPLICE
NO SCALE:
T-650-04

TYP TOP PL STRAP AT PIPE TABLE

HOLE SIZE	STRAPS
LESS THAN 1/3 STUD WIDTH	NONE REQUIRED
LESS THAN 2/3 STUD WIDTH	ST2122 WITH (8) 16d EA END
OVER 2/3 STUD WIDTH	ST2215 WITH (10) 16d EA END

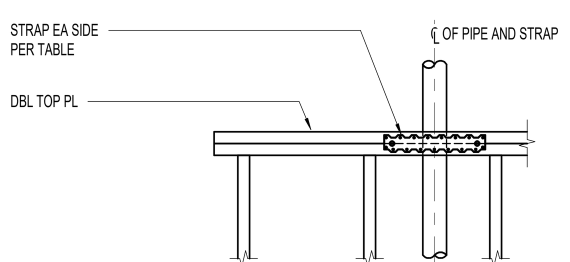

WHERE MULTIPLE PIPES OCCUR IN A WALL, SPACE PENETRATIONS FAR ENOUGH APART TO PREVENT OVERLAPPING OF STRAPS.

TYPICAL TOP PLATE STRAP AT PIPE

5 S-701 TYPICAL TOP PLATE STRAP AT PIPE
NO SCALE:
T-650-05

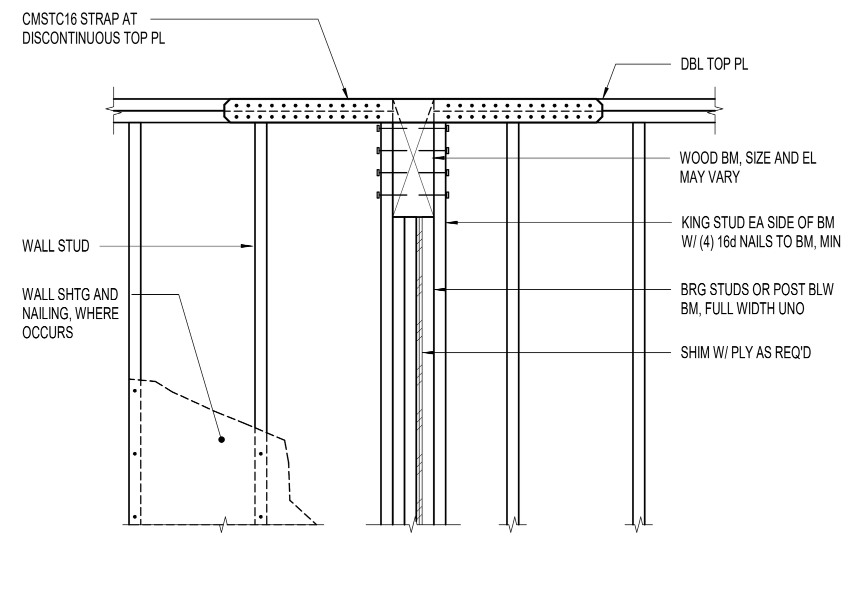

6 S-701 TYPICAL BEAM POCKET
NO SCALE:
T-650-06

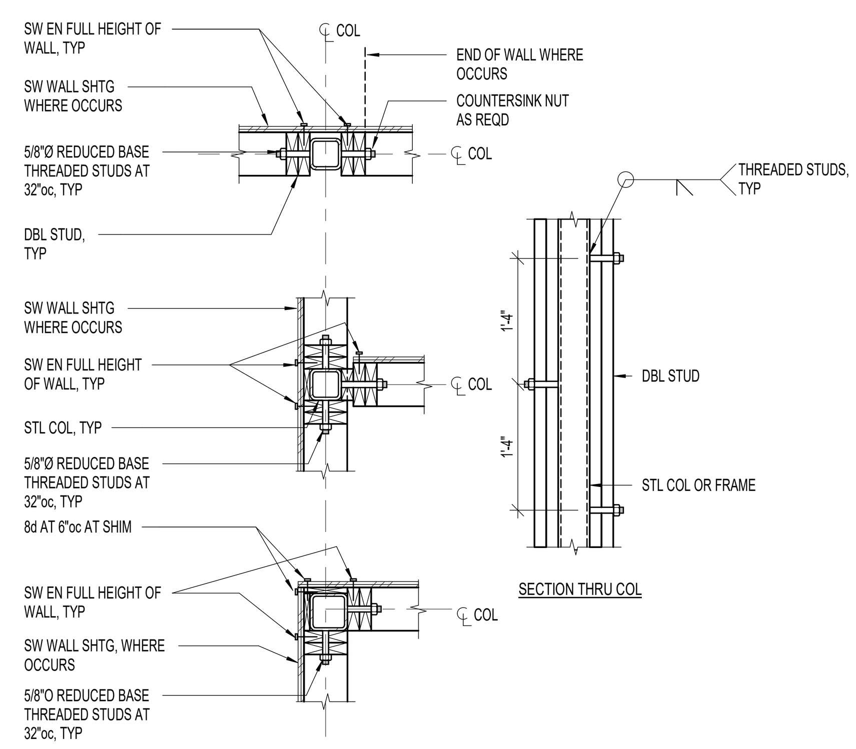

7 S-701 TYPICAL STEEL COLUMN IN WOOD STUD WALLS
NO SCALE:
T-650-07

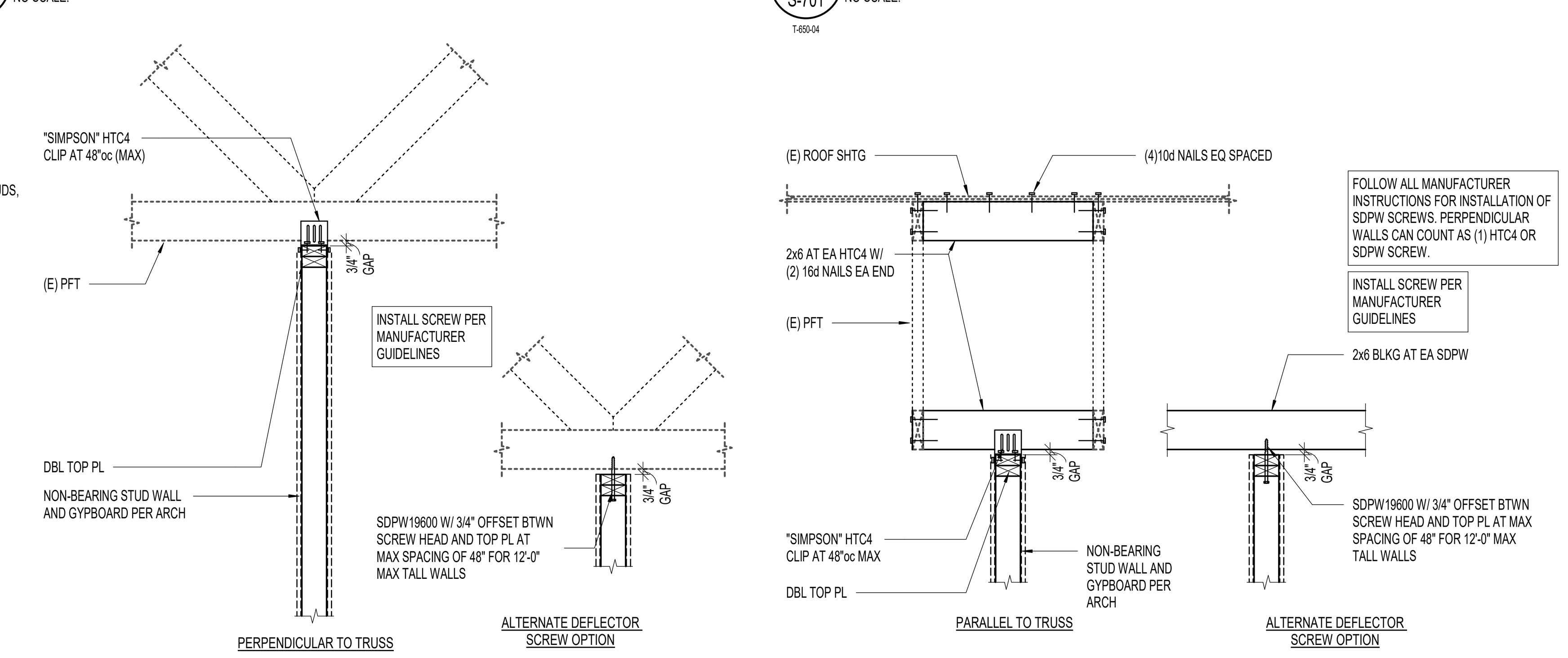

FOLLOW ALL MANUFACTURER INSTRUCTIONS FOR INSTALLATION OF SDPW SCREWS. PERPENDICULAR WALLS CAN COUNT AS (1) HTC4 OR SDPW SCREW.

INSTALL SCREW PER MANUFACTURER GUIDELINES

8 S-701 TYPICAL NON-BEARING WALL TO (E) TRUSS CONNECTION
NO SCALE:

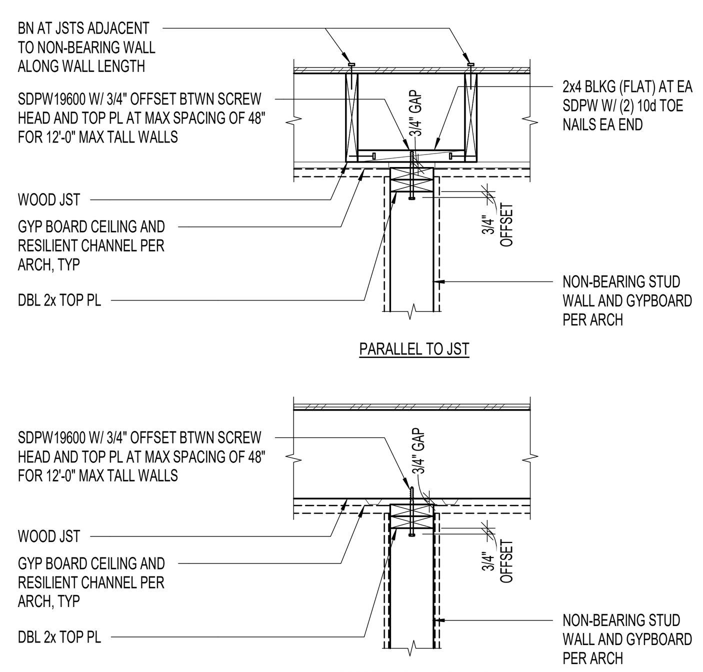

FOLLOW ALL MANUFACTURER INSTRUCTIONS FOR INSTALLATION OF SDPW SCREWS. PERPENDICULAR WALLS CAN COUNT AS (1) SDPW SCREW.

9 S-701 TYPICAL NON-BEARING WALL TO WOOD ROOF CONNECTION
NO SCALE:
T-650-08

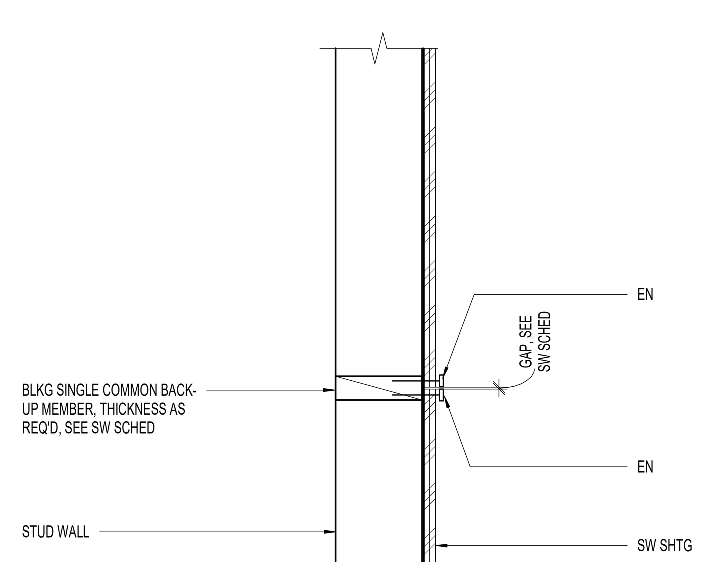

NOTE: THIS JOINT MAY BE ELIMINATED BY RUNNING THE LONG SIDE OF THE SHEATHING VERTICALLY FLOOR TO FLOOR (APPROX 10'-0" LONG SHEETS)

10 S-701 TYPICAL SHEATHING JOINT NOT AT FLOORS
NO SCALE:
T-650-11

CONTACT STRUCTURAL ENGINEER IF MORE THAN TWO SUCCESSIVE STUDS REQUIRE HORIZONTAL PENETRATIONS OR IF LARGER HOLES ARE REQ'D

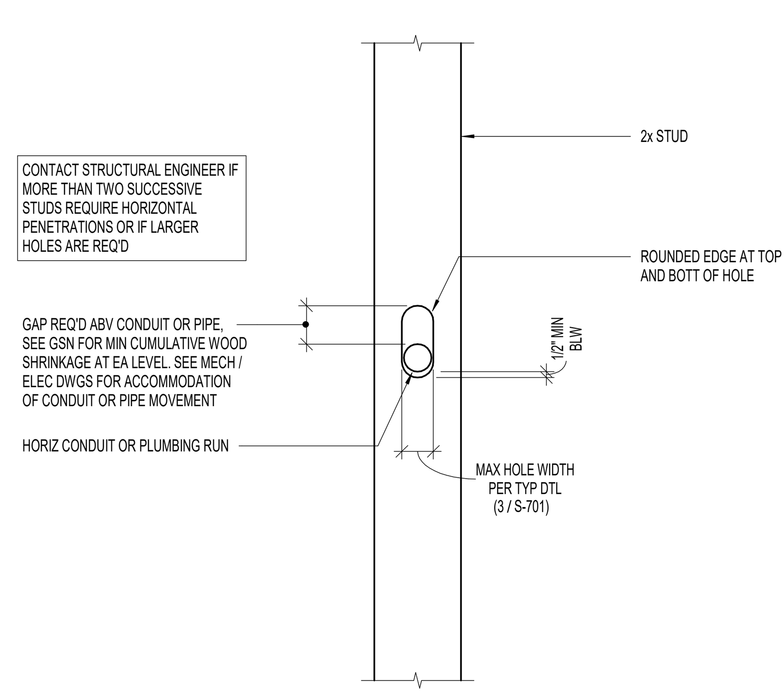

11 S-701 TYPICAL HORIZONTAL STUD PENETRATION
NO SCALE:
T-650-12

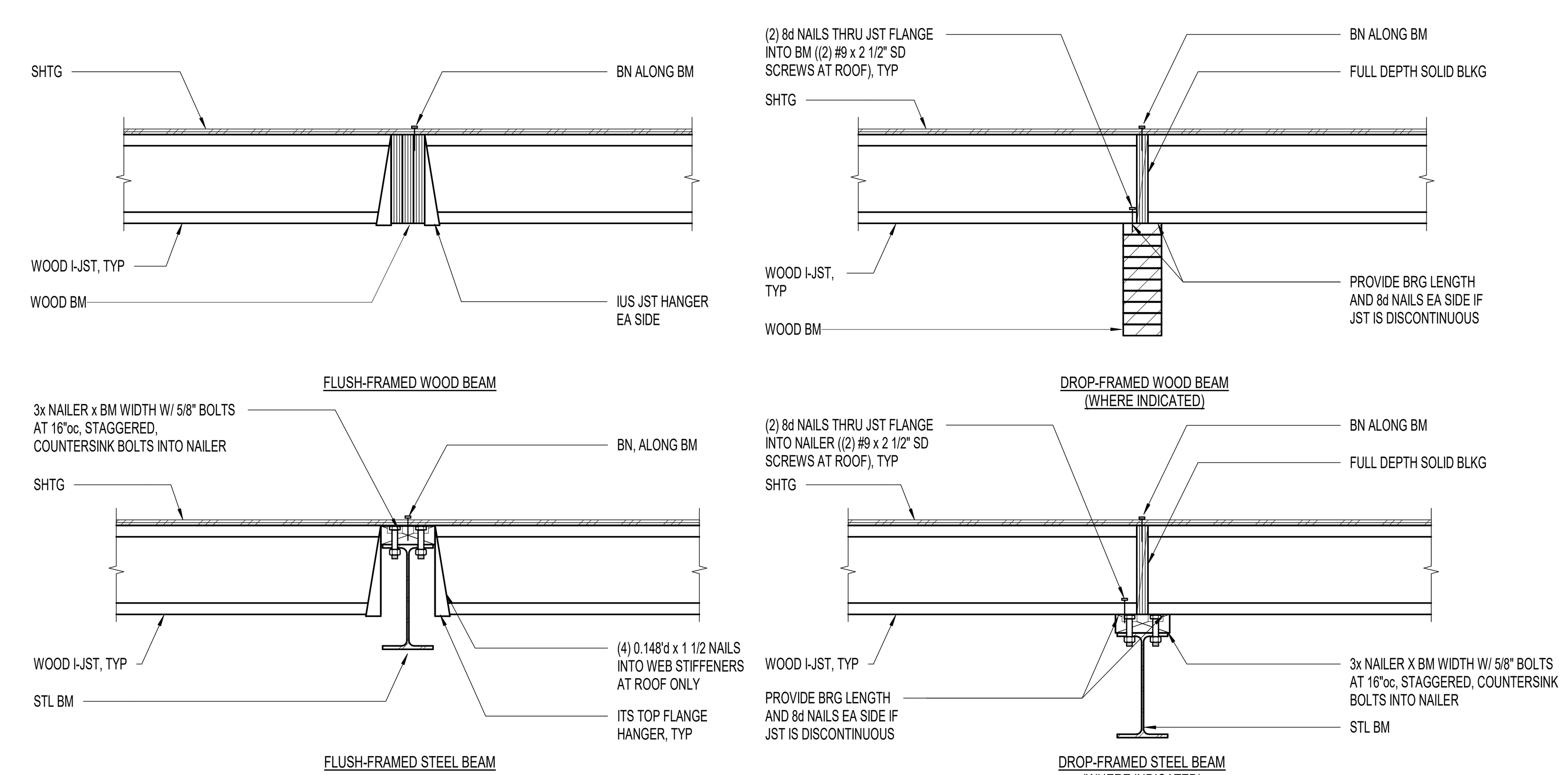

12 S-701 TYPICAL WOOD I-JOIST AT BEAM
NO SCALE:
T-651-18

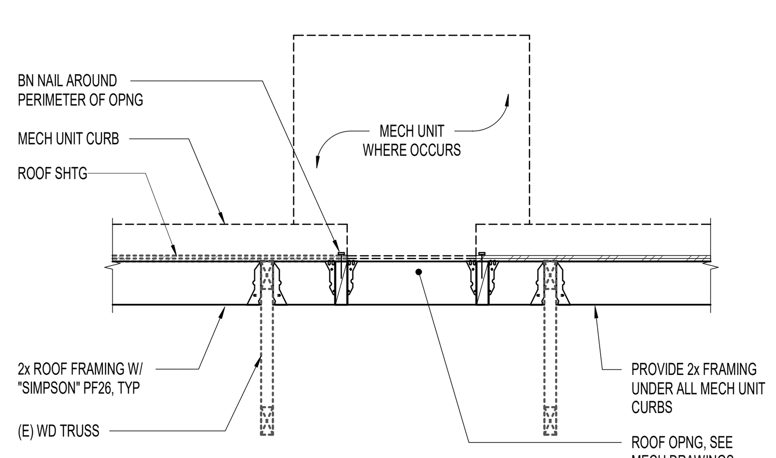

13 S-701 TYPICAL FRAMING AT ROOF OPENING / MECH UNIT
NO SCALE:

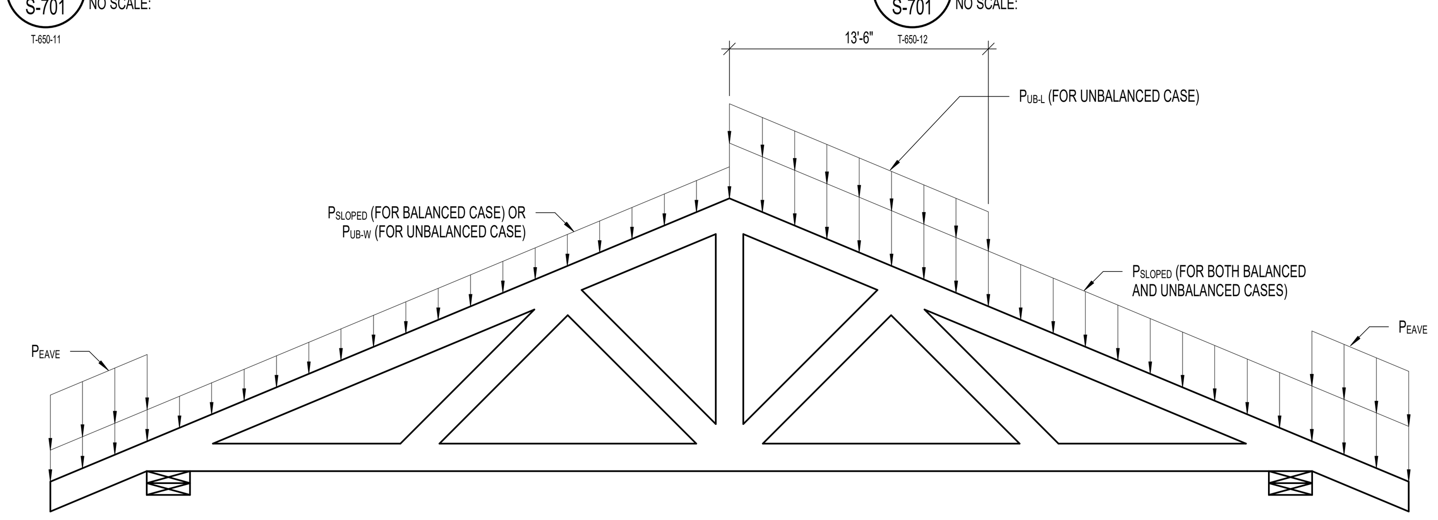

UNBALANCED SNOW LOADS (PSF, ASD)

P_{SLOPED}	P_{EAVE}	$P_{UB\text{-}W}$	$P_{UB\text{-}L}$
34 psf	34 psf	10 psf	16 psf

NOTES:
1. BOTH BALANCED AND UNBALANCED SNOW LOADS SHALL BE CONSIDERED. EAVE SNOW LOADS (P_{EAVE}) SHALL BE CONSIDERED IN BOTH CASES.
2. SEE PLAN FOR DRIFT LOCATIONS.

16 S-701 UNBALANCED SNOW LOADING DIAGRAM
NO SCALE:
T-753-11

APRIL 16, 2026
PERMIT SET

NOTE:
THESE STRUCTURAL DRAWINGS ARE BASED ON ARCHITECTURAL DRAWINGS DATED APRIL 16, 2026

DIMENSIONS AND ELEVATIONS, AS THEY RELATE TO THE BUILDING IN GENERAL, i.e. GRID TO GRID DIMENSIONS OR DECK BEARING ELEVATIONS, ARE SUPPLIED BY THE ARCHITECT. THEY ARE PROVIDED ON THE STRUCTURAL PLANS AND DETAILS FOR THE CONVENIENCE OF THE CONTRACTOR. VERIFY DIMENSIONS AND ELEVATIONS WITH ARCHITECTURAL DRAWINGS.

Babcock Design

Salt Lake City
52 Exchange Place
Salt Lake City, UT 84111
801.531.1144

Boise
800 W Main Street, Suite 940
Boise, ID 83702
208.424.7675

babcockdesign.com

Consultant

PROFESSIONAL STRUCTURAL ENGINEER GREGORY S. DUNN 04/16/2026 9027257 STATE OF UTAH

client name

ALPINE FIRE STATION

50 E 100 N ALPINE, UT 84004

Revisions

Num.	Description	Date

Project Number	25116
Original Issue	APRIL 16, 2026
Project Status	PERMIT SET

The information and content represented herein is considered by law the architect's instruments of service and are the property of Babcock Design. They are available for limited review and evaluation by clients, consultants, contractors, government agencies, vendors, and office personnel only in accordance with this notice. They are intended for use only for the project specified and are to be used for no other purpose or project including additions to or modification of the completed project. No part thereof may be copied, reproduced, photographed, modified, published, uploaded, transmitted, disclosed, sold, distributed to others in any way including in digital form, or otherwise used without the prior written consent of Babcock Design.

COPYRIGHT © 2025 BABCOCK DESIGN

Stamp

PRELIMINARY
NOT FOR CONSTRUCTION

Sheet Title

ROOF FRAMING DETAILS

Sheet Number

S-701

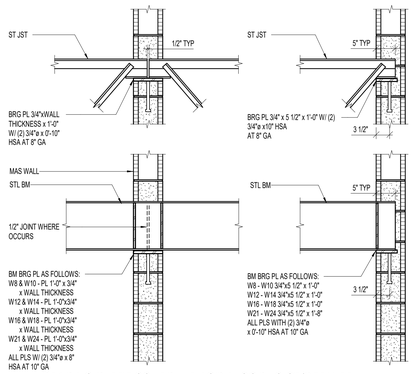

1 BEARING PLATE SCHEDULE FOR FLOOR JOIST/BEAM AT MASONRY WALL

S-702 | NO SCALE:

T-650-01

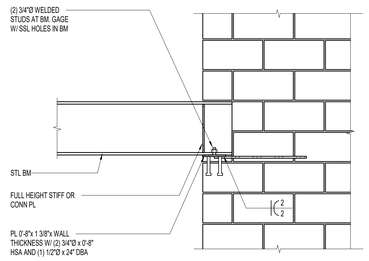

AT THE CONTRACTOR'S OPTION, THE BM MAY BE WELDED PER PLAN ON ONE SIDE AND TACKED IN PLACE ON THE OTHER SIDE (NOT HARD WELDED BOTH ENDS) DURING ERECTION. ONCE THE BUILDING IS DRIED IN, OR OTHER TIME DEEMED APPROPRIATE BY THE ARCHITECT / ENGINEER, THE BEAM WOULD BE WELDED FULL ON BOTH ENDS.

2 BEAM BEARING AT MASONRY WALL

S-702 | NO SCALE:

T-650-02

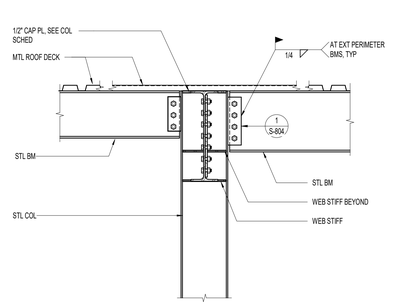

3 TYPICAL BOLTED CONNECTION TO STEEL COLUMN FLANGE

S-702 | NO SCALE:

T-725-04

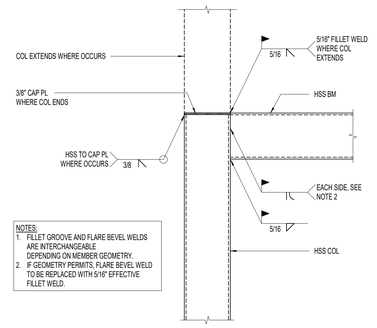

NOTES:
1. FILLET GROOVE AND FLARE BEVEL WELDS ARE INTERCHANGEABLE DEPENDING ON MEMBER GEOMETRY.
2. IF GEOMETRY PERMITS, FLARE BEVEL WELD TO BE REPLACED WITH 5/16" EFFECTIVE FILLET WELD.

4 TYPICAL HSS TO HSS CONNECTION

S-702 | NO SCALE:

T-625-02

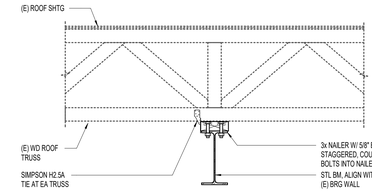

5 STEEL BEAM AT EXISTING ROOF TRUSS

S-702 | NO SCALE:

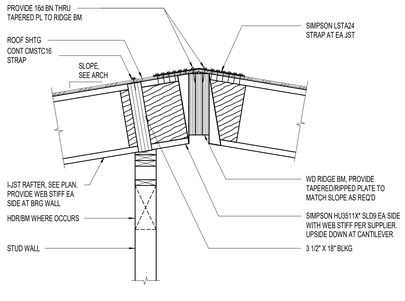

6 SLOPED ROOF FRAMING AT INTERIOR BEARING WALL

S-702 | NO SCALE:

T-701-06

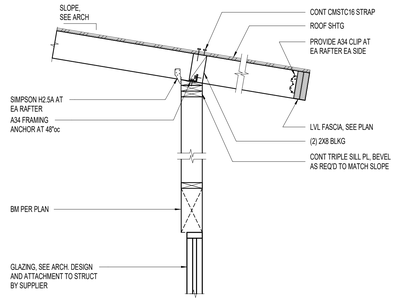

7 TYPICAL RAFTER FRAMING PERPENDICULAR TO INTERIOR MASONRY WALL

S-702 | NO SCALE:

T-701-06

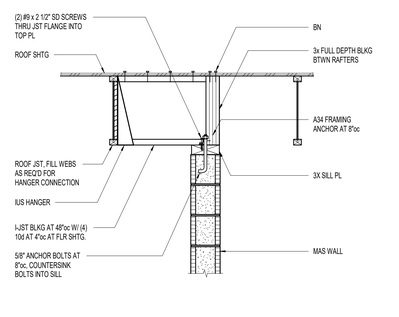

8 TYPICAL ROOF FRAMING PARALLEL TO EXISTING MASONRY WALL

S-702 | NO SCALE:

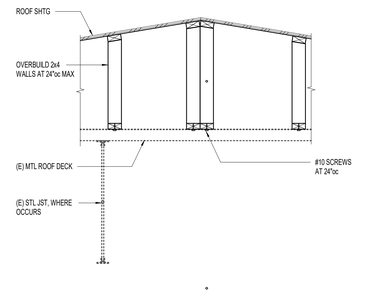

9 RAFTER FRAMING PERPENDICULAR TO EXTERIOR WALL (SLOPED DOWN)

S-702 | NO SCALE:

10 RAFTER FRAMING PARALLEL TO EXTERIOR WALL

S-702 | NO SCALE:

11 RAFTER FRAMING PERPENDICULAR TO EXTERIOR WALL (SLOPED UP)

S-702 | NO SCALE:

12 RAFTER FRAMING PARALLEL TO EXTERIOR WALL

S-702 | NO SCALE:

13 TYPICAL WOOD I-JOIST AT BEAM

S-702 | NO SCALE:

T-651-18

14 EXISTING WOOD STUDS TO HEADER

S-702 | NO SCALE:

15 SLOPED ROOF FRAMING AT INTERIOR STEEL BEAM

S-702 | NO SCALE:

T-701-06

16 SLOPED ROOF FRAMING AT INTERIOR BEARING WALL TO BEAM

S-702 | NO SCALE:

T-701-06

17 RAFTER FRAMING PERPENDICULAR TO EXTERIOR WOOD WALL (SLOPED DOWN)

S-702 | NO SCALE:

18 RAFTER FRAMING PARALLEL TO INTERIOR MASONRY WALL

S-702 | NO SCALE:

19 TYPICAL ROOF FRAMING AT OVERBUILD

S-702 | NO SCALE:

Content of: 4/16/2026 1:37:01 PM

Original drawing is 30" x 42" Autodesk Docs://25116 - ALPINE FIRE STATION 25D/25D397 Alpine Fire Station_S725.rvt

F E D C B A

1 2 3 4 5

Babcock Design

Salt Lake City
52 Exchange Place
Salt Lake City, UT 84111
801.531.1144

Boise
800 W Main Street, Suite 940
Boise, ID 83702
208.424.7675

babcock**design**.com

Consultant

GREGORY'S DUNN 04/16/2026 90272257 PROFESSIONAL STRUCTURAL ENGINEER STATE OF UTAH

client name

ALPINE FIRE STATION

50 E 100 N ALPINE, UT 84004

Revisions

Num.	Description	Date

Project Number	25116
Original Issue	APRIL 16, 2026
Project Status	PERMIT SET

The information and content represented herein is considered by law the architect's instruments of service and shall remain the property of Babcock Design. Unauthorized use of this information by any other consultants, contractors, government agencies, vendors, and office personnel only in accordance with this notice. They are intended for use only for the project specified and are to be used for no other purpose or project including additions to or modification of the completed project. No part thereof may be copied, reproduced, photographed, modified, published, uploaded, transmitted, disclosed, sold, distributed to others in any way including in digital form, or otherwise used without the prior written consent of Babcock Design.

COPYRIGHT © 2025 BABCOCK DESIGN

Stamp

PRELIMINARY NOT FOR CONSTRUCTION

Sheet Title

ROOF FRAMING DETAILS

Sheet Number

S-702

APRIL 16, 2026
PERMIT SET

NOTE:
THESE STRUCTURAL DRAWINGS ARE BASED ON ARCHITECTURAL DRAWINGS DATED APRIL 16, 2026

DIMENSIONS AND ELEVATIONS, AS THEY RELATE TO THE BUILDING IN GENERAL, i.e. GRID TO GRID DIMENSIONS OR DECK BEARING ELEVATIONS, ARE SUPPLIED BY THE ARCHITECT. THEY ARE PROVIDED ON THE STRUCTURAL PLANS AND DETAILS FOR THE CONVENIENCE OF THE CONTRACTOR. VERIFY DIMENSIONS AND ELEVATIONS WITH ARCHITECTURAL DRAWINGS.

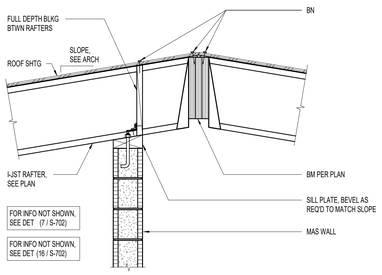

1 S-703 NO SCALE:

SLOPED ROOF FRAMING AT INTERIOR MASONRY WALL TO BEAM

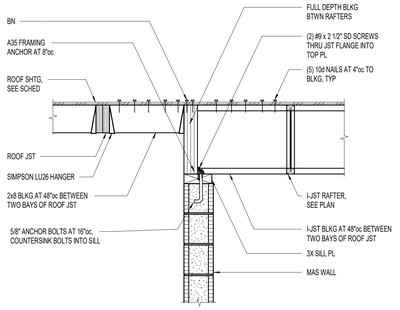

2 S-703 NO SCALE:

ROOF FRAMING AT MASONRY WALL AT SOUTHEAST ENTRANCE

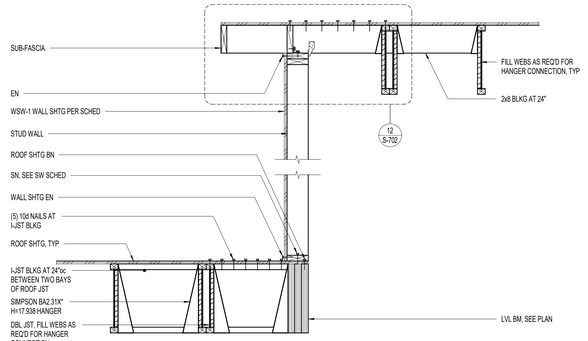

3 S-703 NO SCALE:

RAFTER FRAMING PARALLEL TO OVERBUILD WALL

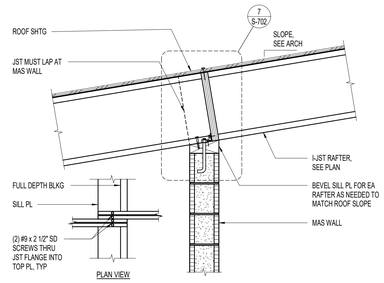

4 S-703 T-BEVEL

RAFTER LAP FRAMING PERPENDICULAR TO INTERIOR MASONRY WALL

5 S-703 NO SCALE:

RAFTER FRAMING PARALLEL TO EXTERIOR WALL

6 S-703 NO SCALE:

OUTRIGGER BEAM AT EXTERIOR WALL

7 S-703 NO SCALE:

CROSS-TIE AT FRAMING PARALLEL TO EXTERIOR WALL

8 S-703 NO SCALE: T-703-08

CROSS-TIE AT INTERIOR WOOD BEARING WALL

9 S-703 NO SCALE:

TYPICAL ROOF DRAG STRAP TO MASONRY WALL

NOTE: FIELD VERIFICATION OF THE EXISTING CONDITION IS REQUIRED TO VERIFY CONNECTION OF ROOF TRUSSES TO MASONRY WALL. GENERAL CONTRACTOR PLEASE ASSUME TENSION TIES ARE REQUIRED. PLEASE NOTIFY EOR WHEN ROOF AND CEILING FINISHES HAVE BEEN REMOVED. ADDITIONAL RETROFIT MAY BE NEEDED.

10 S-703 NO SCALE:

TYPICAL EXISTING ROOF FRAMING PARALLEL TO EXISTING MASONRY WALL CONNECTION RETROFIT

11 S-703 NO SCALE: T-703-08

SLOPED ROOF FRAMING AT INTERIOR WOOD BEAM

12 S-703 NO SCALE:

TYPICAL VESTIBULE ROOF PERPENDICULAR FRAMING

13 S-703 NO SCALE:

TYPICAL VESTIBULE ROOF PARALLEL FRAMING

APRIL 16, 2026
PERMIT SET

NOTE:
THESE STRUCTURAL DRAWINGS ARE BASED ON ARCHITECTURAL DRAWINGS DATED: APRIL 16, 2026

DIMENSIONS AND ELEVATIONS, AS THEY RELATE TO THE BUILDING IN GENERAL, i.e. GRID TO GRID DIMENSIONS OR DECK BEARING ELEVATIONS, ARE SUPPLIED BY THE ARCHITECT. THEY ARE PROVIDED ON THE STRUCTURAL PLANS AND DETAILS FOR THE CONVENIENCE OF THE CONTRACTOR. VERIFY DIMENSIONS AND ELEVATIONS WITH ARCHITECTURAL DRAWINGS.

Babcock Design

Salt Lake City
52 Exchange Place
Salt Lake City, UT 84111
801.531.1144

Boise
800 W Main Street, Suite 940
Boise, ID 83702
208.424.7675

babcock**design**.com

Consultant

GREGORY'S DUNN 04/16/2026 90272.57 PROFESSIONAL STRUCTURAL ENGINEER STATE OF UTAH

client name

ALPINE FIRE STATION

50 E 100 N ALPINE, UT 84004

Revisions

Num.	Description	Date

Project Number	25116
Original Issue	APRIL 16, 2026
Project Status	PERMIT SET

The information and content represented herein is considered by law the architect's instruments of service and are the property of Babcock Design. They are available for limited review and evaluation by clients, consultants, contractors, government agencies, vendors, and office personnel only in accordance with this notice. They are intended for use only for the project specified and are to be used for no other purpose or location without the written permission of Babcock Design. Unauthorized use, sale, or transfer, or any copying, reproduced, photographed, modified, published, uploaded, transmitted, disclosed, sold, distributed to others in any way including in digital form, or otherwise used without the prior written consent of Babcock Design.

COPYRIGHT © 2025 BABCOCK DESIGN

Stamp

PRELIMINARY NOT FOR CONSTRUCTION

Sheet Title

ROOF FRAMING DETAILS

Sheet Number

S-703

CONCRETE FOOTING SCHEDULE

MARK	WIDTH	LENGTH	THICKNESS	REINFORCING CROSSWISE				REINFORCING LENGTHWISE				COMMENTS
				NO	SIZE	LENGTH	SPACING	NO	SIZE	LENGTH	SPACING	
FC2.0	2'-0"	CONT	12"					2	#5	CONT	EQ	
FC3.0	3'-0"	CONT	12"		#6	2' - 6"	12"	3	#5	CONT	EQ	TOP & BOTT REINF
FC3.0A	3'-0"	CONT	12"		#6	2' - 6"	14"	3	#5	CONT	EQ	
FC4.0	4'-0"	CONT	12"		#5	3' - 6"	14"	4	#5	CONT	EQ	TOP & BOTT REINF
FC4.0A	4'-0"	CONT	15"		#5	3' - 6"	10"	5	#5	CONT	EQ	TOP & BOTT REINF
FC5.0	5'-0"	CONT	27"		#7	4' - 6"	12"	7	#6	CONT	EQ	TOP & BOTT REINF
FC6.0	6'-0"	CONT	24"		#7	5' - 6"	12"	6	#7	CONT	EQ	TOP & BOTT REINF
FC7.0	7'-0"	CONT	27"		#7	6' - 6"	12"	9	#7	CONT	EQ	TOP & BOTT REINF
FS3.5	3'-6"	3'-6"	12"	3	#5	3'-0"	EQ	3	#5	3'-0"	EQ	
FS4.5	4'-6"	4'-6"	12"	4	#5	4'-0"	EQ	4	#5	4'-0"	EQ	

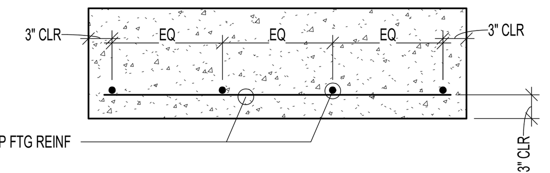

TYPICAL FOOTING SECTION

CONCRETE FOOTING NOTES:

1. PLACE ALL FOOTING REINFORCING IN BOTTOM OF FOOTING WITH 3" CLEAR CONCRETE COVER, UNLESS NOTED OTHERWISE.
2. TOP REINFORCING, WHERE SPECIFIED, SHALL BE PLACED IN THE TOP OF THE FOOTING WITH 2" MINIMUM CONCRETE COVER.
3. IF FOOTINGS ARE EARTH FORMED, FOOTING WIDTH AND LENGTH SHALL BE 6" WIDER AND LONGER THAN SCHEDULED.
4. SEE GENERAL STRUCTURAL NOTES FOR ALL OTHER REQUIREMENTS.
5. NOT ALL FOOTINGS ARE USED, SEE FOUNDATION PLAN FOR FOOTING MARKS.
6. RUN CONTINUOUS BARS IN 'FC' FOOTING THROUGH INTERSECTED 'FS' FOOTINGS, AND TO THE FAR SIDE OF INTERSECTED 'FC' FOOTINGS (NO CORNER BARS REQUIRED).
7. EXTEND CONTINUOUS FOOTINGS 1'-0" BEYOND END OF WALL, EXCEPT AT INTERSECTING CORNERS OR UNO ON PLAN.
8. FOOTINGS MAY BE THICKER THAN THE SCHEDULED DEPTH IN AREAS SURROUNDING ANCHOR BOLTS OR HOLD-DOWNS, SEE ANCHORAGE AND HOLD-DOWN DETAILS.
9. IN FC FOOTINGS CROSSWISE BAR SHALL BE BELOW THE LENGTHWISE BAR

1 S-801 CONCRETE FOOTING SCHEDULE

NO SCALE:

T-810-06

CONCRETE WALL SCHEDULE

MARK	THICKNESS	REINFORCING			WALL TYPE	COMMENTS
		VERTICAL	HORIZONTAL	TOP AND BOTTOM		
CW-8	8"	(1) #4 AT 18"oc	(1) #4 AT 12"oc	(1) #4	A	
CW-10	10"	(1) #4 AT 16"oc	(1) #5 AT 15"oc	(1) #4	A	
CW-12	12"	(2) #4 AT 18"oc	(2) #4 AT 16"oc	(2) #4	C	
CW-14	14"	(2) #4 AT 12"oc	(2) #4 AT 12"oc	(2) #4	C	
CW-20	20"	(2) #5 AT 12"oc	(2) #5 AT 12"oc	(2) #5	C	

CONCRETE WALL NOTES:

1. SEE GENERAL STRUCTURAL NOTES FOR COVER AND OTHER REQUIREMENTS NOT NOTED IN SCHEDULE.
2. CONCRETE WALLS NOT DESIGNATED ON THE PLANS SHALL BE REINFORCED AS FOLLOWS:

THICKNESS	VERTICAL REINFORCING	HORIZONTAL REINFORCING
6"	#4 BARS AT 18"oc	#4 BARS AT 16"oc
8"	#4 BARS AT 18"oc	#4 BARS AT 12"oc
10"	#4 BARS AT 16"oc	#5 BARS AT 15"oc
12"	#4 BARS AT 18"oc EA FACE	#4 BARS AT 16"oc EA FACE

3. PLACE STEEL IN THE CENTER OF THE WALL (EXCEPT TYPE 'B' AND RETAINING WALLS). WALLS THICKER THAN 10" SHALL HAVE TWO CURTAINS OF REINFORCEMENT (PLACED NEAR EA FACE OF THE WALL), UNLESS NOTED OTHERWISE ON THE STRUCTURAL DRAWINGS. FOR TYPE "C" AND "D" WALLS, USE 3/4" COVER FOR #6 BARS AND SMALLER, AND 1 1/2" COVER FOR #7-#11 BARS.

WALL REINFORCEMENT PLACEMENT TYPES:

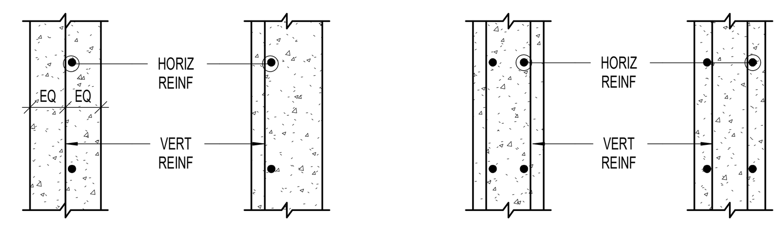

TYPE "A" TYPE "B" TYPE "C" TYPE "D"

2 S-801 CONCRETE WALL SCHEDULE

NO SCALE:

T-810-01

CONCRETE REINFORCING BAR LAP SPLICE SCHEDULE

BAR SIZE	f'c = 3000 PSI				f'c = 3500 PSI				f'c = 4000 PSI				f'c = 4500 PSI				f'c = 5000 PSI				f'c = 6000 PSI			
	REGULAR		TOP		REGULAR		TOP		REGULAR		TOP		REGULAR		TOP		REGULAR		TOP		REGULAR		TOP	
	CLASS		CLASS		CLASS		CLASS		CLASS		CLASS		CLASS		CLASS		CLASS		CLASS		CLASS		CLASS	
	A	B	A	B	A	B	A	B	A	B	A	B	A	B	A	B	A	B	A	B	A	B	A	B
#3	17"	22"	22"	28"	16"	21"	21"	26"	15"	19"	19"	25"	14"	18"	18"	23"	13"	17"	17"	22"	12"	16"	16"	20"
#4	22"	29"	29"	38"	21"	27"	27"	36"	19"	25"	25"	33"	18"	24"	24"	31"	17"	23"	23"	29"	16"	21"	21"	27"
#5	28"	36"	36"	47"	26"	34"	34"	44"	24"	31"	31"	41"	23"	30"	30"	38"	22"	28"	28"	36"	20"	26"	26"	33"
#6	33"	43"	43"	56"	31"	40"	40"	52"	29"	37"	37"	49"	27"	35"	35"	46"	26"	34"	34"	44"	24"	31"	31"	40"
#7	48"	63"	63"	81"	45"	59"	59"	75"	42"	54"	54"	71"	40"	51"	51"	67"	38"	49"	49"	63"	34"	45"	45"	58"
#8	55"	72"	72"	93"	51"	67"	67"	82"	48"	62"	62"	81"	45"	59"	59"	76"	43"	56"	56"	72"	39"	51"	51"	66"
#9	62"	81"	81"	105"	58"	75"	75"	98"	54"	70"	70"	91"	51"	66"	66"	86"	48"	63"	63"	81"	44"	57"	57"	74"
#10	70"	91"	91"	118"	65"	85"	85"	110"	61"	79"	79"	102"	57"	74"	74"	96"	54"	71"	71"	92"	50"	64"	64"	84"
#11	78"	101"	101"	131"	73"	94"	94"	122"	67"	87"	87"	114"	64"	82"	82"	107"	60"	78"	78"	102"	55"	71"	71"	93"

NOTES:
1. THIS SCHEDULE SHALL BE USED FOR ALL SPLICES, UNLESS NOTED OTHERWISE.
2. HORIZONTAL BARS ARE CLASSIFIED AS TOP BARS WHERE 12", OR MORE, OF FRESH CONCRETE IS CAST BELOW THE REINFORCING BARS.
3. CLASS 'B' SPLICES SHALL BE USED FOR ALL SPLICES UNLESS NOTED OTHERWISE.
4. TIES AND STIRRUPS SHALL NOT BE SPLICED.
5. FOR ALL LIGHTWEIGHT CONCRETE, LAP LENGTHS SHALL BE MULTIPLIED BY 1.33.
6. FOR ALL EPOXY COATED BARS, LAP LENGTHS SHALL BE MULTIPLIED BY 1.5 FOR BARS WITH CLEAR COVER LESS THAN 3 BAR DIAMETERS OR CLEAR SPACING LESS THAN 6 BAR DIAMETERS, OTHERWISE MULTIPLY BY 1.2.
7. LAP LENGTHS SHALL BE MULTIPLIED BY 1.25 AT SHEARWALL BOUNDARY ELEMENTS.
8. DEVELOPMENT LENGTH 'Ld' IS EQUAL TO CLASS 'A' SPLICE.
9. IF REINFORCING HAS CLEAR COVER LESS THAN ONE BAR DIAMETER, LAP LENGTHS SHALL BE MULTIPLIED BY 1.5.
10. IF REINFORCING IS NOT ENCLOSED IN TIES OR STIRRUPS AND IS SPACED TIGHTER THAN 2 BAR DIAMETERS ON CENTER, LAP LENGTHS SHALL BE MULTIPLIED BY 1.5.
11. LAP LENGTHS SHALL BE MULTIPLIED BY 1.53 FOR GRADE 80 REBAR, 2.17 FOR GRADE 100 REBAR.
12. WHERE BARS OF DIFFERENT SIZES ARE LAPPED, THE SPLICE LENGTH SHALL BE THE LARGER OF 'Ld' OF THE LARGER BARS AND THE SPLICE LENGTH OF THE SMALLER BAR.

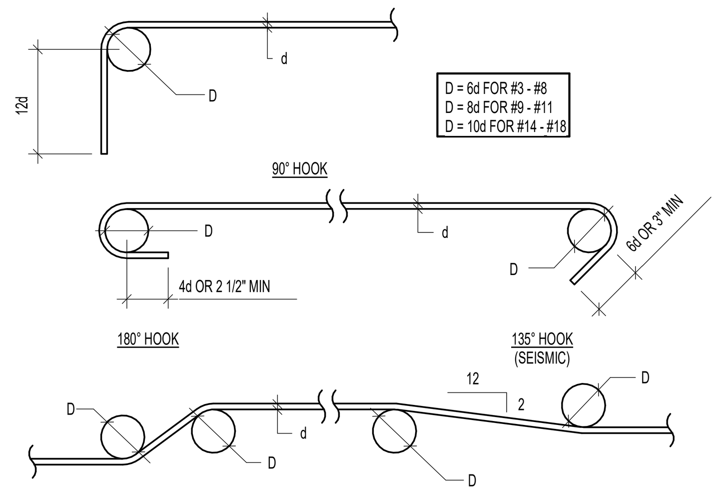

HOOKED BAR DEVELOPMENT LENGTHS, Ldh

BAR SIZE	f'c = 3000 PSI	f'c = 4000 PSI	f'c = 4500 PSI	f'c = 5000 PSI	f'c = 6000 PSI
#3	8"	7"	7"	7"	7"
#4	12"	11"	11"	11"	10"
#5	16"	15"	15"	15"	14"
#6	21"	20"	19"	19"	19"
#7	27"	25"	24"	24"	24"
#8	32"	30"	30"	29"	29"
#9	39"	36"	36"	35"	34"
#10	46"	43"	42"	42"	41"
#11	54"	51"	49"	49"	48"

NOTES:

1. MULTIPLY LENGTHS BY 1.33 FOR GRADE 80 REBAR, 1.67 FOR GRADE 100 REBAR
2. FOR LIGHTWEIGHT CONCRETE, MULTIPLY LENGTHS BY 1.33.
3. FOR EPOXY COATED REINFORCEMENT, MULTIPLY LENGTHS BY 1.2.
4. FOR HOOKS WITH 6db MINIMUM SIDE COVER PERPENDICULAR TO PLANE OF HOOK, MULTIPLY LENGTHS BY 0.8.
5. FOR LATERAL LOAD RESISTING ELEMENTS, CRITICAL SECTIONS SHALL BE TAKEN AS THE FACE OF TIE / HOOP AT CONFINED CORES OF COLUMN JOINTS OR SHEAR WALL BOUNDARY ZONE.

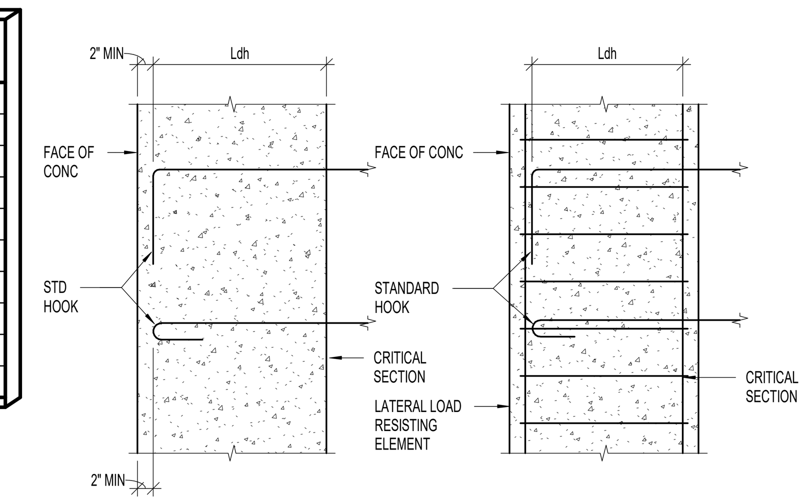

TYPICAL SECTION

SECTION AT LATERAL LOAD RESISTING ELEMENT

3 S-801 CONCRETE REINFORCING BAR LAP SCHEDULES AND DIAGRAMS

NO SCALE:

T-810-05

Current as of: 4/16/2026 1:37:53 PM

Original drawing is 30" x 42" Autodesk Docs://25116 - ALPINE FIRE STATION 202/250287 Alpine Fire Station_ST25.rvt

APRIL 16, 2026
PERMIT SET

NOTE:
THESE STRUCTURAL DRAWINGS ARE BASED ON ARCHITECTURAL DRAWINGS DATED APRIL 16, 2026

DIMENSIONS AND ELEVATIONS, AS THEY RELATE TO THE BUILDING IN GENERAL, i.e. GRID TO GRID DIMENSIONS OR DECK BEARING ELEVATIONS, ARE SUPPLIED BY THE ARCHITECT. THEY ARE PROVIDED ON THE STRUCTURAL PLANS AND DETAILS FOR THE CONVENIENCE OF THE CONTRACTOR. VERIFY DIMENSIONS AND ELEVATIONS WITH ARCHITECTURAL DRAWINGS.

Babcock Design

Salt Lake City
52 Exchange Place
Salt Lake City, UT 84111
801.531.1144

Boise
800 W Main Street, Suite 940
Boise, ID 83702
208.424.7675

babcock**design**.com

Consultant

PROFESSIONAL STRUCTURAL ENGINEER
GREGORY S. DUNN
04/16/2026
9027257
STATE OF UTAH

client name

ALPINE FIRE STATION

50 E 100 N ALPINE, UT 84004

Revisions

Num.	Description	Date

Project Number	25116
Original Issue	APRIL 16, 2026
Project Status	PERMIT SET

The information and content represented herein is considered by law the architect's instruments of service and are the property of Babcock Design. They are available for limited review and evaluation by clients, consultants, contractors, government agencies, vendors, and office personnel only in accordance with this notice. They are intended for use only for the project specified and are to be used for no other purpose or project including additions to or modification of the completed project. No part thereof may be copied, reproduced, photographed, modified, published, uploaded, transmitted, disclosed, sold, distributed to others in any way including in digital form, or otherwise used without the prior written consent of Babcock Design.

COPYRIGHT © 2025 BABCOCK DESIGN

Stamp

PRELIMINARY
NOT FOR CONSTRUCTION

Sheet Title

CONCRETE SCHEDULES

Sheet Number

S-801

MASONRY WALL SCHEDULE

MARK	THICKNESS	MATERIALS	SOLID GROUT	REINFORCING			
				VERTICAL	HORIZONTAL	TYPE	JOINT REINF
MW-08A	8"	CMU	NO	(1) #5 AT 32"oc	(1) #5 AT 32"oc	A	NO
MW-08B	8"	CMU	NO	(1) #5 AT 24"oc	(1) #5 AT 32"oc	A	NO
MW-08C	8"	CMU	NO	(1) #5 AT 24"oc	(1) #5 AT 16"oc	A	NO
MW-08D	8"	CMU	YES	(1) #5 AT 16"oc	(1) #5 AT 8"oc	A	NO
MW-08E	8"	CMU	YES	(1) #5 AT 32"oc	(1) #5 AT 8"oc	A	NO

MASONRY WALL NOTES:

1. COORDINATE WITH ARCHITECTURAL DRAWINGS, MASONRY WALL FINISHES, TYPES OF MATERIAL, COURSING, ETC.
2. DO NOT SOLID GROUT WALLS UNLESS NOTED OTHERWISE.
3. ALL MASONRY BELOW GRADE SHALL BE GROUTED SOLID.
4. VERTICAL REINFORCING SHALL BE CENTERED IN THE WALL UNLESS NOTED OTHERWISE.
5. PROVIDE (1) VERTICAL BAR MINIMUM AT ALL CORNERS AND END OF WALLS.
6. HORIZONTAL WALL REINFORCING SHALL BE PLACED BETWEEN VERTICAL MASONRY COLUMN REINFORCING BARS.
7. HORIZONTAL WALL REINFORCING SHALL CONTINUE THRU MASONRY LINTELS. WHERE BOTH HORIZONTAL WALL REINFORCING AND LINTEL REINFORCING OCCUR IN THE SAME COURSE, USE THE LARGER REINFORCING.
8. HORIZONTAL WALL REINFORCEMENT SPACING SHALL NOT EXCEED 48"oc. IN SPECIAL REINFORCED MASONRY SHEAR WALLS, MAX SPACING OF HORIZONTAL AND VERTICAL BARS SHALL NOT EXCEED THE LESSER OF 48", OR WALL LENGTH / 3, OR WALL HEIGHT / 3.
9. IF JOINT REINFORCING IS REQUIRED, PROVIDE W1.7 GALVANIZED LADDER TO TRUSS TYPE REINFORCING.
10. MASONRY WALLS NOT DESIGNATED ON THE PLANS SHALL BE REINFORCED AS FOLLOWS:

THICKNESS	VERTICAL REINFORCING	HORIZONTAL REINFORCING
6"	#5 BARS AT 32"oc	#4 BARS AT 48"oc
8"	#5 BARS AT 32"oc	#5 BARS AT 48"oc
10"	#6 BARS AT 32"oc	#6 BARS AT 48"oc
12"	#6 BARS AT 32"oc	(2) #5 BARS AT 48"oc

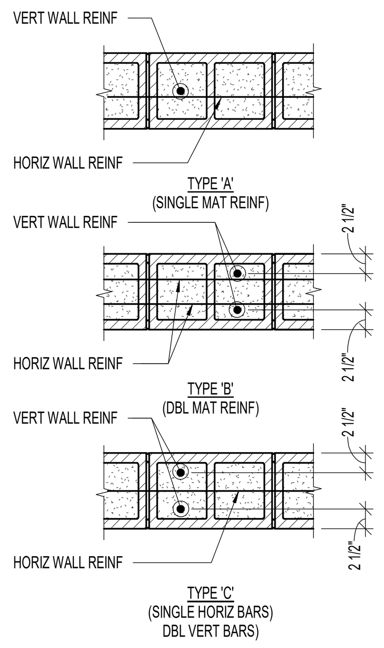

1 MASONRY WALL SCHEDULE
S-802 NO SCALE:
T-860-01

MASONRY COLUMN SCHEDULE

MARK	COLUMN SIZE	REINFORCING		
		VERTICAL	TIES	TYPE
MC-1	8" x 16"	(4) #4	#4 AT 6"oc	1
MC-2	8" x 24"	(4) #4	#4 AT 6"oc	2
MC-3	8" x 32"	(4) #4	#4 AT 6"oc	3
MC-4	8" x 51"	(6) #4	#4 AT 6"oc	5

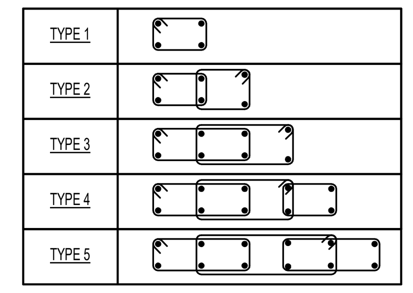

MASONRY COLUMN NOTES:

1. HORIZONTAL WALL REINFORCEMENT SHALL BE LOCATED TO THE INSIDE OF VERTICAL BARS.
2. VERTICAL REINFORCING AND TIES SHALL EXTEND TO FULL WALL HEIGHT, UNO.
3. VERTICAL MASONRY COLUMN REINFORCING SHALL EXTEND INTO FOOTING AND TERMINATE WITH A STANDARD 90° HOOK. FOR CONCRETE FOUNDATION WALLS OVER 5'-0" TALL, VERTICAL COLUMN REINFORCING SHALL DOWEL 4'-0" MINIMUM INTO THE FOUNDATION WALL.
4. IN CONCRETE FOUNDATION WALLS, VERTICAL MASONRY COLUMN REINFORCING SHALL BE TIED WITH #3 TIES AT THE SAME SPACING AND CONFIGURATION AS MASONRY COLUMNS ABOVE.
5. #3 TIES MAY BE SUBSTITUTED WITH #2 TIES IN SEISMIC DESIGN CATEGORIES A, B AND C.

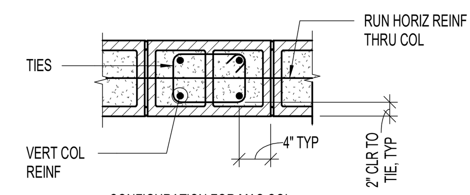

CONFIGURATION FOR MAS COL

2 MASONRY COLUMN SCHEDULE
S-802 NO SCALE:
T-860-04

MASONRY LINTEL SCHEDULE

MARK	LINTEL DEPTH	LINTEL SPAN (MAX)	REINFORCING		COMMENTS
			HORIZONTAL	STIRRUPS	
ML-1	16"	3' - 0"	(1) #5BAR CONT T&B	NONE	__
ML-2	24"	10' - 0"	(1) #6BAR CONT T&B	NONE	__
ML-3	24"	3' - 4"	(1) #6BAR CONT T&B	#3 AT 6"oc	__

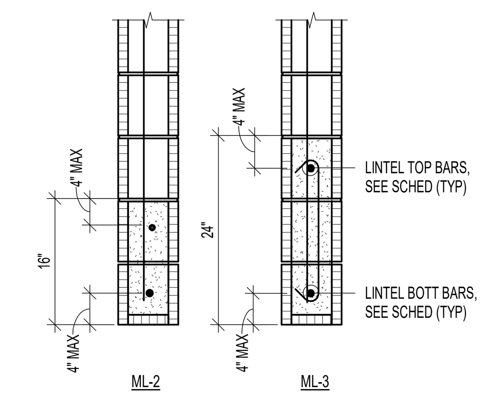

MASONRY LINTEL NOTES:

1. LINTEL WIDTH AND MATERIAL TYPES SHALL BE THE SAME AS THE WALL IN WHICH THE LINTEL IS CONSTRUCTED.
2. GROUT MASONRY LINTELS MONOLITHICALLY WITH THE SUPPORT WALL OR COLUMN AT EA END.
3. MASONRY LINTELS ML-1 THRU ML-4 SHALL BE USED OVER OPENINGS IN MASONRY WALLS WHEN A SPECIFIC MASONRY LINTEL IS NOT OTHERWISE SPECIFIED. WHEN A LINTEL IS SPECIFIED ON THE PLANS, THE MAXIMUM SPAN AS NOTED IN THIS SCHEDULE SHALL NOT APPLY. CONSULT THE STRUCTURAL ENGINEER FOR LINTELS NOT SPECIFIED ON THE PLANS WHICH HAVE A SPAN GREATER THAN 10'-0".
4. MASONRY LINTELS ML-1 THRU ML-4 SHALL NOT BE LOCATED DIRECTLY BELOW FLOOR OR ROOF BEAMS OR GIRDERS UNLESS NOTED OTHERWISE ON THE PLANS. JOISTS SHALL NOT BEAR ON ANY LINTEL LESS THAN 16" DEEP. CONSULT THE STRUCTURAL ENGINEER FOR LINTELS NOT SHOWN ON THE PLANS WHICH ARE LOCATED DIRECTLY BELOW FLOOR OR ROOF BEAMS OR GIRDERS.
5. EXTEND ALL LINTEL HORIZONTAL REINFORCING BEYOND THE EDGE OF OPENING BY AT LEAST A LAP LENGTH. IF HORIZONTAL REINFORCING CANNOT EXTEND LAP SPLICE LENGTH BEYOND EDGE OF OPENING, PROVIDE 90° STANDARD HOOK.
6. SPLICE TOP BARS AT MID-SPAN OF LINTEL ONLY AND BOTTOM BARS OVER SUPPORTS ONLY.
7. HORIZONTAL WALL REINFORCING SHALL CONTINUE THRU MASONRY LINTELS, WHERE BOTH HORIZONTAL WALL REINFORCING AND LINTEL REINFORCING OCCUR IN THE SAME COURSE, USE THE LARGER REINFORCING.
8. TYPICAL WALL VERTICAL REINFORCEMENT TO EXTEND TO THE BOTTOM OF THE LINTEL.
9. SEE GENERAL STRUCTURAL NOTES FOR ADDITIONAL REQUIREMENTS.

3 MASONRY LINTEL SCHEDULE
S-802 NO SCALE:
T-860-02

MASONRY REINFORCING BAR LAP SPLICE SCHEDULE

REBAR SIZE	SINGLE BAR CENTERED IN CELL														
	THICKNESS			THICKNESS			THICKNESS			THICKNESS			THICKNESS		
	8"	10"	12"	8"	10"	12"	8"	10"	12"	8"	10"	12"	8"	10"	12"
	f'm = 2000psi			f'm = 2500psi			f'm = 3000psi			f'm = 3500psi			f'm = 4000psi		
#3	12"			12"			12"			12"			12"		
#4	13"	12"		12"			12"			12"			12"		
#5	20"	16"	13"	18"	14"	12"	16"	13"	12"	15"	12"		14"	12"	
#6	38"	29"	24"	34"	26"	21"	31"	24"	20"	29"	22"	18"	27"	21"	17"
#7	52"	40"	33"	47"	36"	29"	42"	33"	27"	39"	30"	25"	37"	29"	23"
#8 *	72"	61"	50"	71"	55"	45"	65"	50"	41"	60"	46"	38"	56"	43"	35"
#9 *	81"	78"	64"	81"	70"	57"	81"	64"	52"	78"	59"	48"	73"	56"	45"
	FLUSH WALL PILASTER OR COLUMN OR TWO BARS IN EA CELL														
#3	13"			12"			12"			12"			12"		
#4	22"			20"			18"			17"			16"		
#5	35"			31"			28"			26"			25"		
#6	54"			54"			53"			49"			46"		
#7	63"			63"			63"			63"			62"		
#8 *	72"			72"			72"			72"			72"		
#9 *	81"			81"			81"			81"			81"		

MASONRY REINFORCING BAR LAP SPLICE NOTES:

1. MECHANICAL SPLICES ARE REQUIRED FOR BARS IN MASONRY GREATER THAN #9 BARS.
2. MECHANICAL SPLICES MAY BE USED IN LIEU OF LAP SPLICES SHOWN.
3. MECHANICAL SPLICES SHALL DEVELOP 125% OF SPECIFIED YIELD STRENGTH OF BAR.
4. MASONRY DEVELOPMENT LENGTHS SHOWN SHALL BE INCREASED BY 50% WHERE REBAR IS COATED WITH EPOXY.

* BARS MAY DIFFICULT TO LAP SPLICE DUE TO CONGESTION. COUPLERS RECOMMENDED.

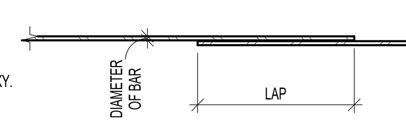

4 MASONRY REINFORCING BAR LAP SPLICE SCHEDULE
S-802 NO SCALE:
T-860-05

MASONRY FREESTANDING WALL SCHEDULE

WALL GEOMETRY		FTG GEOMETRY		"V" BARS		"H" BARS		"T" BARS		"C" BARS	
"TW"	"HT"	"W"	"TF"	SIZE	SPACE	SIZE	SPACE	SIZE	SPACE	SIZE	SPACE
8"	8'-0"	5'-0"	24"	(1) #6	16"oc	(1) #5	32"oc	#6	10"oc	#4	10"oc

MASONRY FREESTANDING WALL NOTES:

1. "HT" IS A MAXIMUM DIMENSION.
2. WALLS WITH "V" BARS AT 16"oc OR LESS TO BE SOLID GROUTED.
3. f'm = 2000 psi (MIN), f'c = 3000 psi (MIN). SEE GSN FOR MORE STRINGENT REQUIREMENTS IF APPLICABLE.

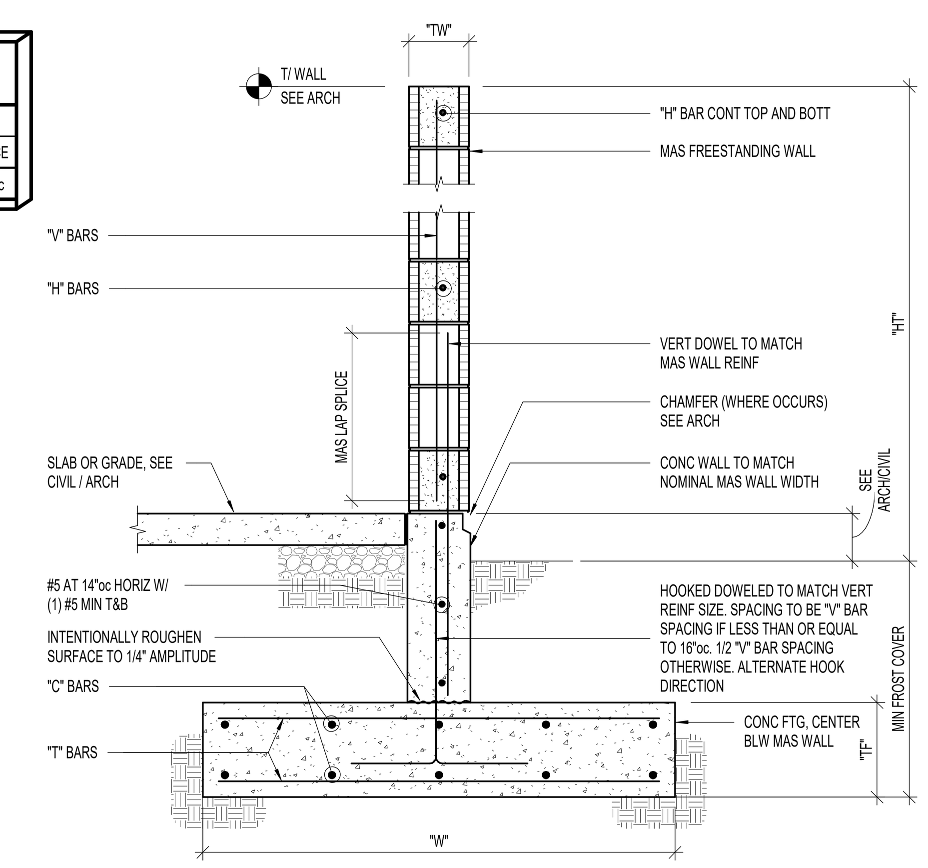

SINGLE MAT REINFORCED MASONRY WALL

5 MASONRY FREE STANDING WALL SCHEDULE
S-802 NO SCALE:
T-862-03

APRIL 16, 2026
PERMIT SET

NOTE:
THESE STRUCTURAL DRAWINGS ARE BASED ON ARCHITECTURAL DRAWINGS DATED APRIL 16, 2026

DIMENSIONS AND ELEVATIONS, AS THEY RELATE TO THE BUILDING IN GENERAL, i.e. GRID TO GRID DIMENSIONS OR DECK BEARING ELEVATIONS, ARE SUPPLIED BY THE ARCHITECT. THEY ARE PROVIDED ON THE STRUCTURAL PLANS AND DETAILS FOR THE CONVENIENCE OF THE CONTRACTOR. VERIFY DIMENSIONS AND ELEVATIONS WITH ARCHITECTURAL DRAWINGS.

Current as of: 4/16/2026 1:37:54 PM

Original drawing is 30" x 42" Autodesk Docs://25116 - ALPINE FIRE STATION 202/250287 Alpine Fire Station_ST25.rvt

Babcock Design

Salt Lake City
52 Exchange Place
Salt Lake City, UT 84111
801.531.1144

Boise
800 W Main Street, Suite 940
Boise, ID 83702
208.424.7675

babcockdesign.com

Consultant

PROFESSIONAL STRUCTURAL ENGINEER
GREGORY S. DUNN
04/16/2026
9027257
STATE OF UTAH

client name

ALPINE FIRE STATION

50 E 100 N ALPINE, UT 84004

Revisions

Num.	Description	Date

Project Number	25116
Original Issue	APRIL 16, 2026
Project Status	PERMIT SET

The information and content represented herein is considered by law the architect's instruments of service and are the property of Babcock Design. They are available for limited review and evaluation by clients, consultants, contractors, government agencies, vendors, and office personnel only in accordance with this notice. They are intended for use only for the project specified and are to be used for no other purpose or project including additions to or modification of the completed project. No part thereof may be copied, reproduced, photographed, modified, published, uploaded, transmitted, disclosed, sold, distributed to others in any way including in digital form, or otherwise used without the prior written consent of Babcock Design.

COPYRIGHT © 2025 BABCOCK DESIGN

Stamp

PRELIMINARY
NOT FOR CONSTRUCTION

Sheet Title

MASONRY SCHEDULES

Sheet Number

S-802

BEARING WALL FRAMING SCHEDULE

MARK	FLOOR	WALL STUDS	STUD SPACING	NOTES
WW-04	1ST FLOOR	2x4	16"oc	-
WW-06	1ST FLOOR	2x6	16"oc	-

NOTES:
1. FOR TYPICAL TOP PLATE SPLICE, SEE DETAIL (4 / S-701)
2. PROVIDE RIM BOARD AT ALL LEVELS AS FOLLOWS, UNO. AT DOUBLED STUDS, PROVIDE THE RIM FOR THE AVERAGE SINGLE STUD SPACING ((2) 2x6 AT 16"oc = (1) 2x6 AT 8"oc)

2x6 WALL STUD SPACING BELOW RIM	RIM	REQUIRED VERTICAL CAPACITY (ASD)
16"oc OR GREATER	1 1/2" LSL / OSB	3900 plf
12"oc	1 3/4" LSL	5200 plf
8"oc	3 1/2" LSL	7800 plf

2x4 WALL STUD SPACING BELOW RIM	RIM	REQUIRED VERTICAL CAPACITY (ASD)
16"oc OR GREATER	1 1/2" LSL / OSB	2500 plf
12"oc	1 1/2" LSL / OSB	3300 plf
8"oc	1 3/4" LSL	5000 plf

3. RIM BOARD THICKNESS MAY NEED TO BE INCREASED TO ACCOMMODATE SHEAR WALL SILL NAILING WHERE REQUIRED. SEE SHEAR WALL SCHEDULE NOTE 15. THE WIDER RIM SHALL GOVERN.
4. MIN SILL NAILING IS 16d AT 8"oc. SEE SW SCHED FOR SILL NAILING AT SHEAR WALLS.

1 / S-803 BEARING WALL FRAMING SCHEDULE
NO SCALE:
T-850-01

HEADER SCHEDULE

EXTERIOR WALL				INTERIOR WALL			
SPAN (ft)	SIZE	NUMBER OF TRIM STUDS*	NUMBER OF KING STUDS	SPAN	SIZE	NUMBER OF TRIM STUDS*	NUMBER OF KING STUDS
0'-0" > < 3'-6"	(3) 2x8	1	1	0'-0" > < 3'-6"	(3) 2x8	2	1
3'-6" > < 6'-6"	(3) 2x10	2	2	3'-6" > < 6'-6"	(3) 2x10	3	1

*WHERE HDRS DO NOT STACK AT ALL LEVELS, THE TRIM STUDS AT THE LOWEST HDR SHALL CARRY DOWN TO THE TRANSFER SLAB/FOUNDATION

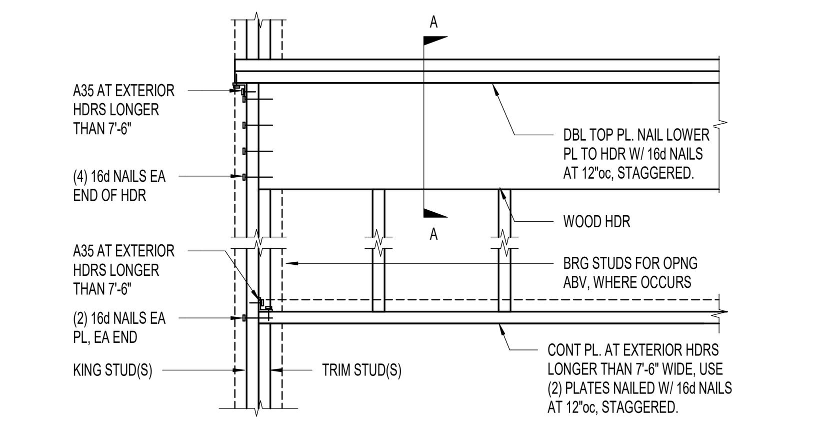

ALTERNATE HDR FRAMING OPTION
(HDR AGAINST DBL TOP PL)

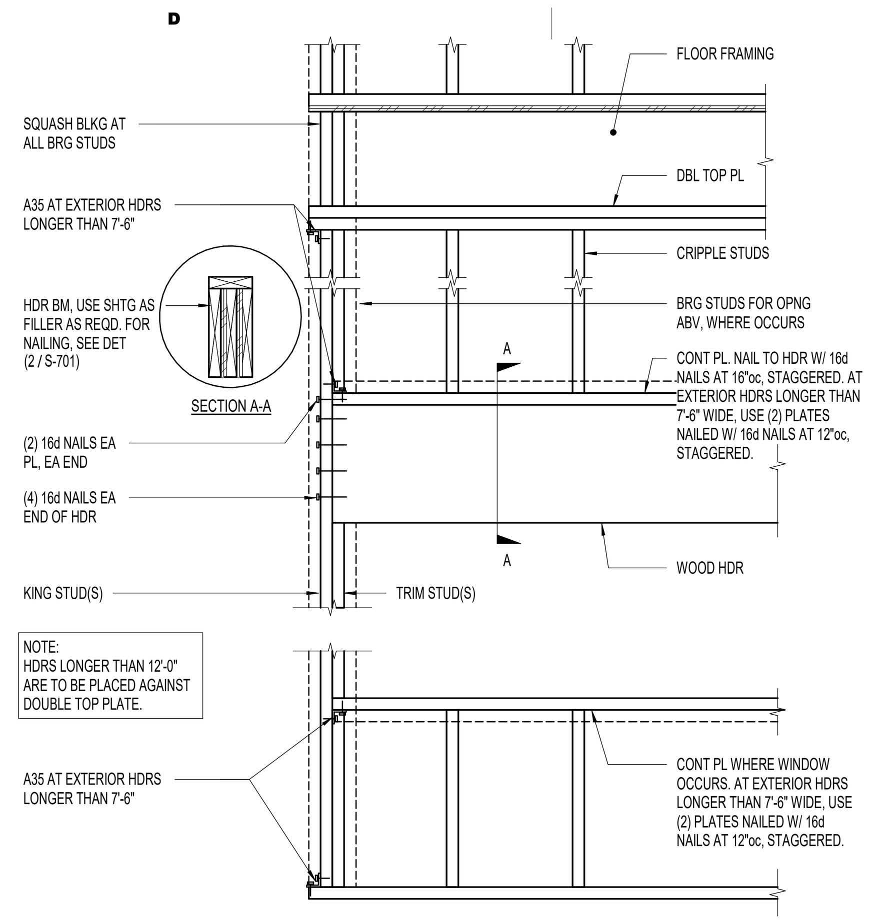

2 / S-803 HEADER SCHEDULE
NO SCALE:
T-850-02

SHEATHING SCHEDULE AT ROOF AND FLOOR

LOCATION	WOOD SHEATHING THICKNESS	NAIL SIZE	EDGE NAIL SPACING		FIELD NAIL SPACING	BOUNDARY NAIL SPACING	FULLY BLOCKED
			CONT EDGE *	OTHER EDGE			
ROOF	19/32"	10d	(2) ROWS AT 4"oc	(2) ROWS AT 4"oc	12"oc	(2) ROWS AT 4"oc	YES

* NOT APPLICABLE FOR UNBLOCKED DIAPHRAGMS

NOTES:
1. ALL ROOF SHEATHING SHALL BE APA RATED SHEATHING WITH A MINIMUM SPAN RATING OF 32/16 FOR 15/32" OSB, OR 40/20 FOR 19/32" OSB. ALL FLOOR SHEATHING SHALL BE APA RATED SHEATHING WITH A MINIMUM SPAN RATING OF 48/24. USE OSB INSTEAD OF PLYWOOD UNLESS OTHERWISE APPROVED BY THE EOR.
2. NAIL ROOF SHEATHING TO SUPPORTS. GLUE AND NAIL FLOOR SHEATHING TO SUPPORTS.
3. ALL FLOOR SHEATHING TO BE TONGUE AND GROOVE. GLUE TONGUE AND GROOVE JOINT.
4. FLOOR SHEATHING PANEL(S) AT EXTERIOR SHALL BE FRT PLYWOOD (NOT OSB) WHEN REQUIRED BY THE ARCHITECT.
5. USE COMMON NAILS (8d DIAMETER = 0.131", 10d DIAMETER = 0.148"). RING SHANK NAILS WITH EQUAL OR GREATER DIAMETER MAY BE USED AT FLOOR SHEATHING AT CONTRACTOR'S OPTION. MINIMUM NAIL PENETRATION INTO FRAMING MEMBERS, 8d = 1 3/8", 10d = 1 1/2".
6. DRIVE NAILS WITH NAIL HEADS FLUSH WITH THE SURFACE OF THE SHEATHING. DO NOT OVER DRIVE OR UNDER DRIVE NAILS. EDGE NAILS SHALL BE PLACED 3/8" FROM EDGE OF PANEL.
7. PANEL EDGES PERPENDICULAR TO SUPPORTS SHALL BE UNBLOCKED UNLESS FULLY BLOCKED IS SPECIFICALLY NOTED. PROVIDE PANEL EDGE NAILING AS SPECIFIED ALONG ALL SUPPORTED EDGES (ALL EDGES IF FULLY BLOCKED), BOUNDARIES, TOP PLATES OF SHEAR WALLS, STRAPS, COLLECTORS, AND AT ALL OTHER LOCATIONS AS INDICATED AND/OR REQUIRED FOR A COMPLETE INSTALLATION.
8. ALL SHEATHING PANELS SHALL HAVE A MINIMUM WIDTH OF 2'-0", UNLESS PANEL IS FULLY BLOCKED AND NAILED TO ADJACENT PANELS.
9. PLACE ALL SHEATHING PANEL JOINTS ALONG THE CENTER OF A SINGLE COMMON BACK-UP MEMBER, TYPICAL.

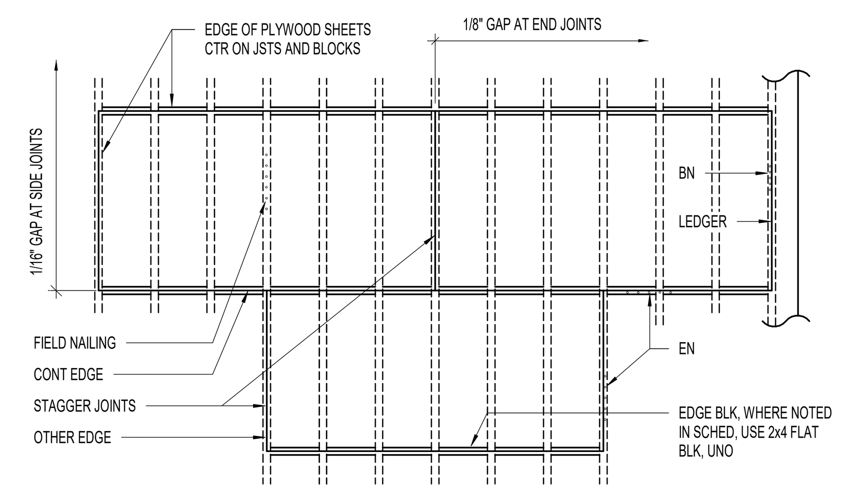

3 / S-803 SHEATHING SCHEDULE AT ROOF AND FLOOR
NO SCALE:
T-850-03

SUSPENDED WOOD CEILING SCHEDULE

MAXIMUM SPAN	CEILING JOIST
8'-0"	2x4 AT 24"oc
10'-0"	2x4 AT 16"oc
12'-0"	2x6 AT 24"oc
14'-0"	2x6 AT 16"oc
OVER 14'-0"	USE 2x4 HANGERS PER DETAIL

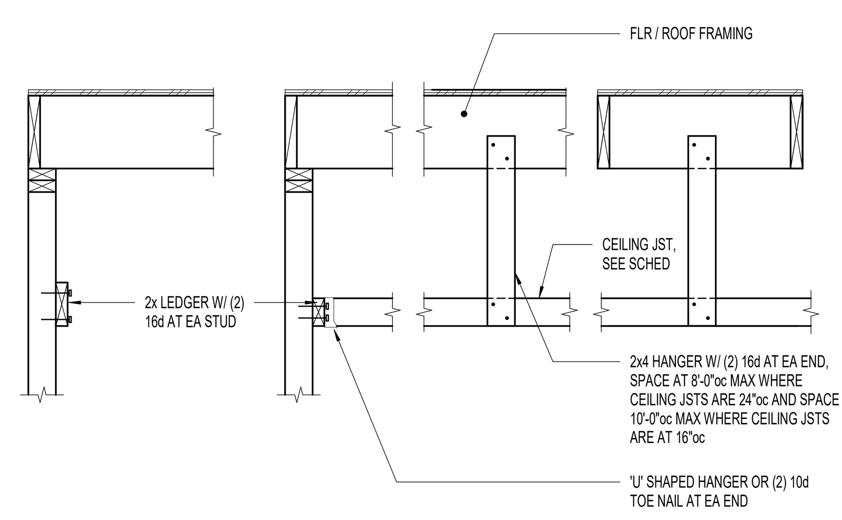

4 / S-803 SUSPENDED WOOD CEILING SCHEDULE
NO SCALE:
T-850-04

MINIMUM NAILING SCHEDULE

CONNECTION	NAILING
BRDG TO JST, TOE NAIL EA END	(2) 8d
BOTTOM PL TO JST OR BLK, FACE NAIL	16d AT 1'-4"oc OR 3" x 0.131 AT 1'-0"oc
STUD TO TOP OR BOTTOM PLATE, END NAIL	(2) 16d OR (3) 3" x 0.131
STUD TO STUD, FACE NAIL	16d AT 2'-0"oc OR 3" x 0.131 AT 1'-4"oc
TOP PL TO TOP PL, FACE NAIL	16d AT 1'-4"oc OR 3" x 0.131 AT 1'-0"oc
BLK BTWN JST OR RAFTERS TO TOP PL, TOE NAIL	(3) 8d
RIM JST TO TOP PL, TOE NAIL	8d AT 0'-6"oc
TOP PL, LAPS AT WALL INTERSECTION, FACE NAIL	(2) 16d OR (3) 3" x 0.131
CONT HEADER, TWO PIECES	16d AT 1'-4"oc ALONG EA EDGE OR 16d BOX AT 1'-0" ALONG EA EDGE
CEILING JST TO PL, TOE NAIL	(3) 8d
CONT HEADER TO STUD, TOE NAIL	(4) 8d
CEILING JST, LAPS OVER PARTITIONS, FACE NAIL	(3) 16d OR (4) 3" x 0.131
RAFTER TO PL, TOE NAIL	(3) 8d
1" BRACE TO EA STUD AND PL, FACE NAIL	(2) 8d
STUD TO STUD AT WALL CORNERS	16d AT 1'-4"oc OR 3" x 0.131 AT 1'-0"oc
BUILT-UP GIRDER AND BM	3" x 0.131 AT 24"oc AT TOP AND BOTT AND STAGGERED, (3) 3" x 0.131 AT ENDS AND AT EA SPLICE
COLLAR TIE TO RAFTER, FACE NAIL	(3) 10d
ROOF RAFTER TO 2x RIDGE BM OR HIP TOE NAIL	(3) 10d
END NAIL	(2) 16d OR (3) 3" x 0.131
JST TO BAND JST, END NAIL	(3) 16d OR (4) 3" x 0.131
LEDGER STRIP, FACE NAIL AT EA JOIST	(3) 16d OR (4) 3" x 0.131
*PLYWOOD AND PARTICLEBOARD:	
SUBFLOOR, ROOF AND WALL SHEATHING (TO FRAMING)	
1/2" AND LESS	8d
19/32" - 3/4"	8d OR 10d
1 1/8" - 1 1/4	10d
COMBINATION SUB FLOOR - UNDERLAYMENT (TO FRAMING)	
3/4" AND LESS	8d
7/8" - 1"	8d OR 10d
7/8" - 1 1/4"	10d

*NAILS SPACED AT 6 INCHES ON CENTER AT EDGES, 12 INCHES AT INTERMEDIATE SUPPORTS, EXCEPT 6" INCHES AT ALL SUPPORTS WHERE SPANS ARE 48 INCHES OR MORE. FOR NAILING OF DIAPHRAGMS AND SHEAR WALLS, REFER TO THE APPROPRIATE SCHEDULE.

NOTES:
1. ALL NAILS ARE COMMON NAILS, UNO.
2. EXCERPT FROM IBC TABLE 2304.10.1. ADD'L NAILING OPTIONS NOT SHOWN MAY BE USED, EXCLUDING STAPLES.
3. NAILING REQUIREMENTS SHOWN HERE DO NOT REPLACE HARDWARE ON THE PLANS OR DETAILS.

5 / S-803 MINIMUM NAILING SCHEDULE
NO SCALE:
T-850-05

'HDU' HOLD-DOWN SCHEDULE

MARK	MIN HOLD-DOWN POST	F1554-GR36 ANCHOR BOLT Ø	EMBED DEPTH SEE NOTE 3
HDU2	(2) 2x6 OR (3) 2x4	5/8"	8"

NOTES:
1. INCREASE FOOTING DEPTH WHERE EMBEDMENT LENGTH PLUS 3" IS GREATER THAN FOOTING DEPTH SPECIFIED.
2. USE ALL SDS WOOD SCREWS PROVIDED WITH HOLD-DOWN.
3. HOLD-DOWN ANCHORAGE TO BE VERIFIED AT FUTURE DATE. BASIS OF DESIGN IS THAT DRILL AND EPOXY ANCHORAGE WILL BE DRILLED THROUGH THE EXISTING CONCRETE FOUNDATION WALL AND EMBEDDED INTO (E) FTG. IF (E) FTG IS DETERMINED TO BE INSUFFICIENT FOR LOADING RETROFIT TO ENLARGE FOOTING MAY BE REQUIRED.

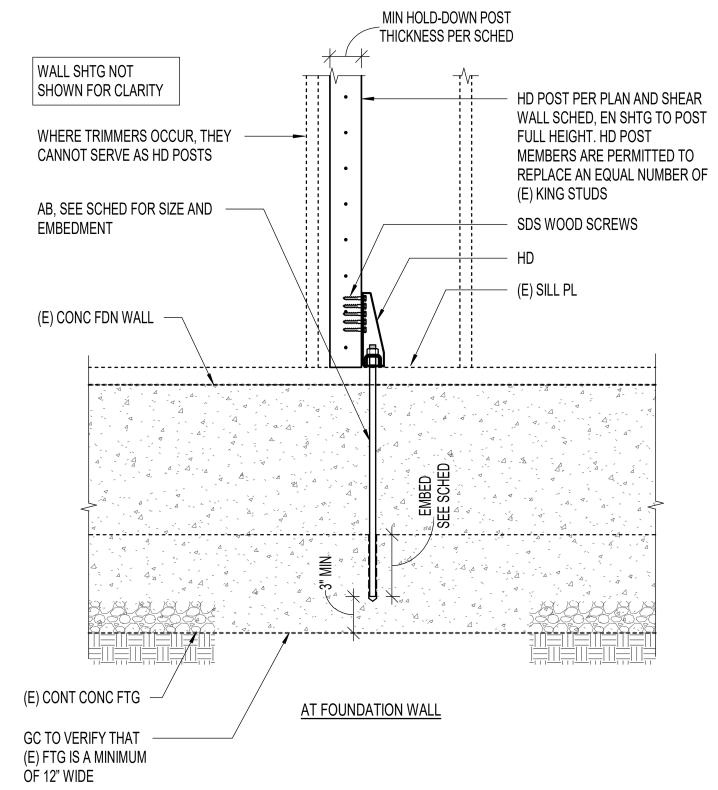

AT FOUNDATION WALL

6 / S-803 'HDU' TYPE HOLD-DOWN SCHEDULE
NO SCALE:

WOOD SHEAR WALL SCHEDULE

MARK	WOOD LEVEL	SHEATHING THICKNESS	BOTH SIDES SHEATHED	NAIL SIZE	EDGE NAIL SPACING (EN)	STUD/ BLKG AT JOINT (SEE NOTE 8)	SILL SCREWS AT TOP OF WALL, SDWS22800 (SEE NOTE 16)	FRAMING ANCHOR AT TOP OF WALL (SEE NOTE 15)	SILL NAILING (ROWS) AT BOTT OF WALL (SEE NOTE 15)	SOLE BOLTING TO CONCRETE (SEE NOTE 12)	CONT ROD HD FORCE (k)		ESTIMATED* COMPRESSION STUD QUANTITY		ESTIMATED* HOLD-DOWN ASSEMBLY WIDTH	
											TENSION	COMPRESSION	2x6 WALL	2x4 WALL	2x6 WALL	2x4 WALL
WSW-1	1st	7/16"	NO	8d	4"	3x	(1) ROW AT 16"oc	(1) A34 AT 16"oc		5/8" AT 40"oc	4	5	1	3	5 1/2"	8 1/2"

NOTES:
1. ALL WALL SHEATHING SHALL BE APA RATED SHEATHING WITH A MINIMUM SPAN INDEX OF 24/16. USE OSB INSTEAD OF PLYWOOD UNLESS OTHERWISE APPROVED BY THE EOR.
2. ALL EXTERIOR WALLS SHALL BE SHEATHED WITH 7/16" SHEATHING AND NAILED WITH 8d NAILS AT 6"oc AT PANEL EDGES AND AT 12" oc IN THE FIELD, TYPICAL, UNO. FASTEN SOLE PLATE TO FOUNDATION WITH 5/8"Ø ANCHOR BOLTS AT 48"oc, TYPICAL, UNO. SEE SHEAR WALL SCHEDULE FOR ADDITIONAL REQUIREMENTS.
3. SHEATHING AT EXTERIOR WALLS MAY NEED TO BE FIRE-TREATED. SEE ARCHITECTURAL DRAWINGS.
4. USE COMMON NAILS (8d DIAMETER = 0.131", 10d DIAMETER = 0.148"). MINIMUM NAIL PENETRATION INTO FRAMING MEMBERS, 8d = 1 1/2", 10d = 1 5/8".
5. DRIVE NAILS WITH NAIL HEADS FLUSH WITH THE SURFACE OF THE SHEATHING. DO NOT OVER DRIVE OR UNDER DRIVE THE NAILS. EDGE NAILS SHALL BE PLACED 3/8" FROM EDGE OF PANEL.
6. ALL PANEL EDGES SHALL BE FULLY BLOCKED, UNO. PROVIDE PANEL EDGE NAILING AS SPECIFIED ALONG ALL PANEL EDGES, UPPER TOP PLATES, SILL PLATES, HOLD-DOWN ELEMENTS, STRAPS, COLLECTORS, AND AT ALL OTHER LOCATIONS AS INDICATED AND/OR AS REQUIRED FOR A COMPLETE INSTALLATION.
7. PROVIDE FIELD NAILING AT 12"oc TYPICAL FOR ALL SHEATHED WALLS.
8. PLACE ALL SHEATHING PANELS WITH A 1/8" GAP AT END JOINTS, 1/16" GAP AT SIDE JOINTS. PLACE ALL SHEATHING PANEL JOINTS ALONG THE CENTER OF A SINGLE COMMON BACK-UP MEMBER, TYPICAL (EXCEPT AS NOTED BELOW). SEE SCHEDULE FOR THICKNESS REQUIREMENTS FOR BACK-UP MEMBER (STUDS, BLOCKING). AS AN ALTERNATE, (2) 2x MEMBERS MAY BE USED INSTEAD OF A 3x MEMBER FOR STUDS, PLATES, OR BLOCKING AT SHEATHING PANEL JOINTS PROVIDED THE (2) 2x MEMBERS ARE STITCH NAILED WITH 16d NAILS AT SPACING TO MATCH THE PANEL EDGE NAIL SPACING SHOWN IN THE SCHEDULE. WHEN EDGE NAILING SPACING IS LESS THAN 4", STAGGER THE NAILS. SEE SKETCH.
9. DO NOT SPLICE SHEATHING ALONG TOP PLATES OR SILL PLATES UNLESS THE PLATE MEETS THE MINIMUM THICKNESS INDICATED IN THE SCHEDULE.
10. AT WALLS WITH SHEATHING ON EACH FACE OF THE WALL, STAGGER ALL PANEL JOINTS ON ONE FACE OF THE WALL FROM THE PANEL JOINTS ON THE OTHER FACE OF THE WALL, BOTH HORIZONTAL AND VERTICAL JOINTS. SEE SKETCH.
11. SOLE PLATES AT THE FOUNDATION/PODIUM LEVEL SHALL BE 2x MATERIAL, EXCEPT WHEN BOTH FACES OF THE WALL ARE SHEATHED THEY SHALL BE 3x MATERIAL, TYPICAL, UNO. SEE SKETCH.
12. ALL ANCHOR BOLTS IN SOLE PLATES SHALL BE POSITIONED AND TIED INTO PLACE PRIOR TO CASTING CONCRETE. PLACE ANCHOR BOLTS ALONG CENTERLINE OF STUD WALL. SHIFT LAYOUT OF STUDS AS REQUIRED TO MISS ANCHOR BOLTS. WHERE ANCHOR BOLTS CONFLICT WITH HOLD-DOWN ASSEMBLY, PROVIDE EQUIVALENT QUANTITY OF BOLTS ALONG WALL. PROVIDE A PLATE WASHER BELOW EACH ANCHOR BOLT NUT. THE PLATE WASHER SHALL EXTEND TO WITHIN 1/2" OF THE FACE OF THE SHEATHING. MINIMUM SIZE OF PLATE WASHER SHALL BE 3"x3"x1/4". HOWEVER, AT WALLS WITH SHEATHING ON EACH FACE OF THE WALL, THE PLATE WASHER WILL NEED TO EXTEND TO WITHIN 1/2" OF EACH FACE OF SHEATHING. PLATE WASHERS MAY HAVE A DIAGONALLY SLOTTED HOLE WITH A WIDTH OF UP TO THE DIAMETER OF THE BOLT PLUS 3/16" AND A LENGTH OF 1 3/4" PROVIDED A STANDARD CUT WASHER IS PLACED BETWEEN THE PLATE WASHER AND THE NUT, SEE SKETCH. ANCHOR BOLTS SHALL HAVE 6" MINIMUM EMBED TO THE TOP OF THE J-BOLT OR NUT. IN CONCRETE WITHOUT POST-TENSIONING, 5/8" SOLE BOLTS MAY BE SUBSTITUTED WITH 5/8"ØX8" POST-INSTALLED CONCRETE SCREW ANCHORS APPROVED IN GSN (5" MIN. NOMINAL EMBED, 2.75" MIN. EDGE DISTANCE).
13. PROVIDE A HOLD-DOWN AT EACH END OF EACH SHEAR WALL, INCLUDING SQUASH BLOCKING BETWEEN FLOORS. SEE THE TYPICAL SHEAR WALL AND HOLD-DOWN DETAILS. PLACEMENT OF HOLD-DOWNS SHALL ALLOW FOR THE CORRECT NUMBER OF TRIMMER AND KING POSTS AT OPENINGS. HOLD-DOWN POSTS MAY SERVE AS KING POSTS OF EQUIVALENT SIZE. PLACE CONTINUOUS ROD HOLD-DOWN ROD NO MORE THAN 10" FROM END OF SHEAR WALL, WITH REMAINING COMPRESSION POSTS PLACED TO THE INSIDE. PLACE HOLD-DOWNS WITHIN 10" OF END OF WALL. FOR HSS HOLD-DOWNS, SPLICE COLUMN 4'-0" ABOVE FLOOR LEVEL WITH A CJP WELD.
14. WHERE PERPENDICULAR SHEAR WALLS MEET AT A COMMON CORNER, USE THE LARGER HOLD-DOWN SPECIFIED FOR EACH WALL AND NAIL THE SHEATHING FROM EACH WALL TO THE HOLD-DOWN POST. IF SHEATHING FROM BOTH WALLS CANNOT ATTACH TO THE SAME HOLD-DOWN POST, INSTALL BOTH HOLD-DOWNS. AT CONTINUOUS ANCHOR ROD TYPE HOLD-DOWNS, INSTALL BOTH HOLD-DOWNS. SEE HOLD-DOWN DETAILS.
15. THE SILL NAILING AND FRAMING ANCHOR PORTIONS OF THE SCHEDULE ONLY APPLY WHERE VERTICAL WALL SHEATHING IS INTERRUPTED BY FLOOR FRAMING ELEMENTS. WHERE SILL NAILING IS NOT SPECIFIED, SILL PLATES SHALL BE FASTENED TO WOOD BELOW WITH (1) ROW OF 16d NAILS AT 8"oc. USE RIM TYPE A FOR (1) OR (2) ROWS OF SILL NAILING. USE RIM TYPE B OR C FOR (3) OR (4) ROWS OF SILL NAILING. USE RIM TYPE C FOR 5 OR 6 ROWS OF SILL NAILING. SEE SKETCH.
16. WHERE DOUBLE TOP CHORD BEARING TRUSSES ARE SHOWN IN DETAILS, THE FRAMING ANCHOR AND SILL NAILING ARE SUBSTITUTED WITH SILL SCREWS AS SHOWN, CENTERED ON SILL WIDTH. IN ADDITION, WHERE SILL SCREWS ARE NOT SPECIFIED, SILL PLATES SHALL BE FASTENED TO WOOD BELOW WITH (1) ROW OF SDWS22800 SCREWS AT 16"oc.

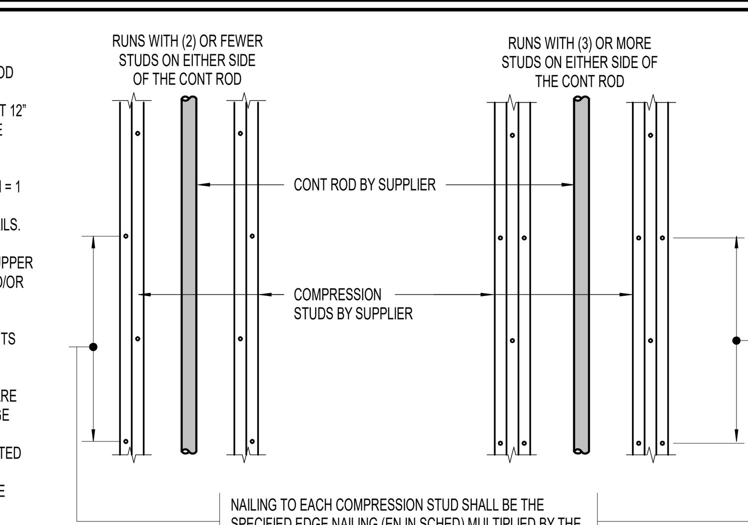

SHEAR WALL EDGE NAILING AT COMPRESSION STUDS

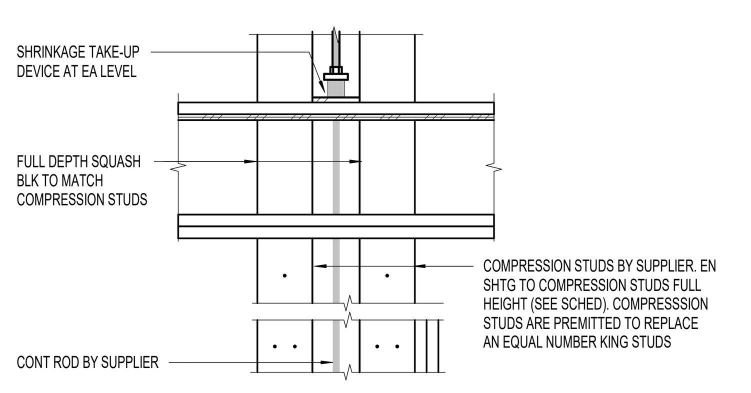

SQUASH BLOCKING BETWEEN FLOORS

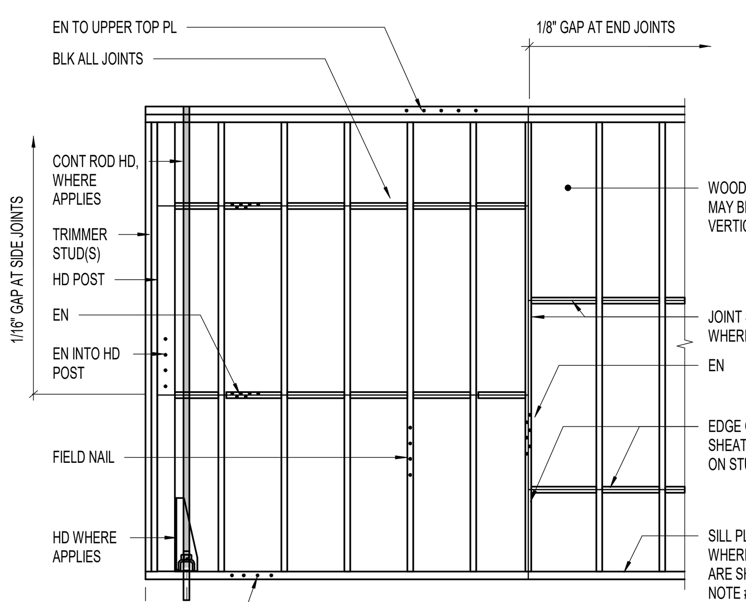

TYP ELEVATION

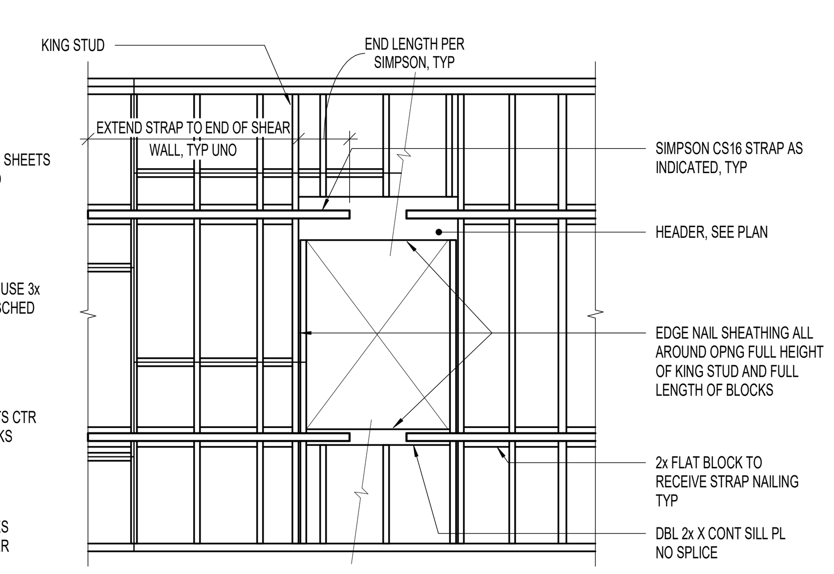

FORCE TRANSFER AROUND OPENING (FTAO ON PLAN)
PERFORATED (PERF ON PLAN) SIMILAR, BUT OMIT STRAP AND STRAP BLOCKING.

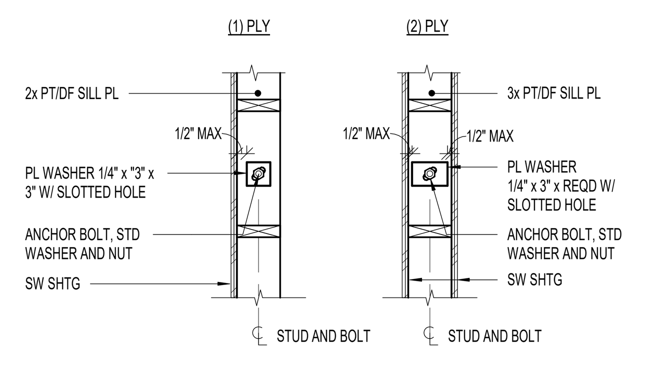

TYPICAL ANCHOR BOLTS AT SHEAR WALLS (PLAN VIEW)
(SEE NOTES 11 & 12)

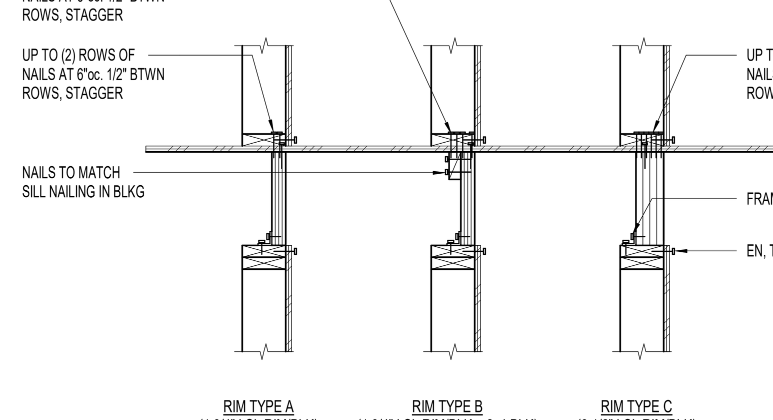

RIM TYPE A
(1 3/4" LSL RIM/BLK)
RIM TYPE B
(1 3/4" LSL RIM/BLK + 2x4 BLK)
RIM TYPE C
(3 1/2" LSL RIM/BLK)
RIM AND SILL NAILING OPTIONS (SEE NOTE 15)

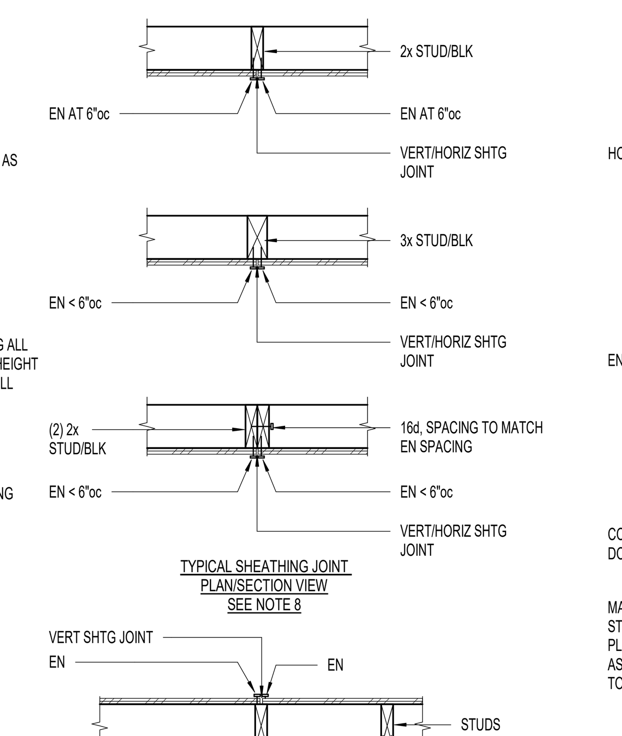

TYPICAL SHEATHING JOINT PLAN/SECTION VIEW
SEE NOTE 8

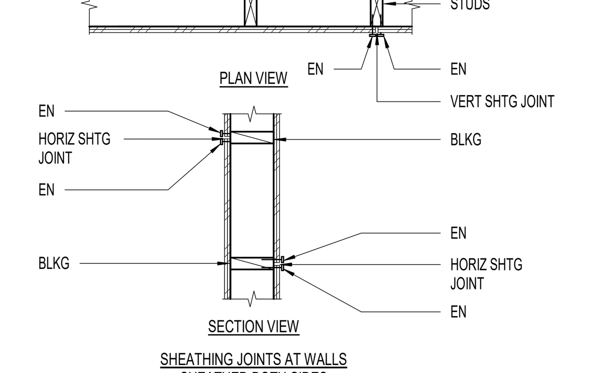

SHEATHING JOINTS AT WALLS SHEATHED BOTH SIDES
SEE NOTE 10

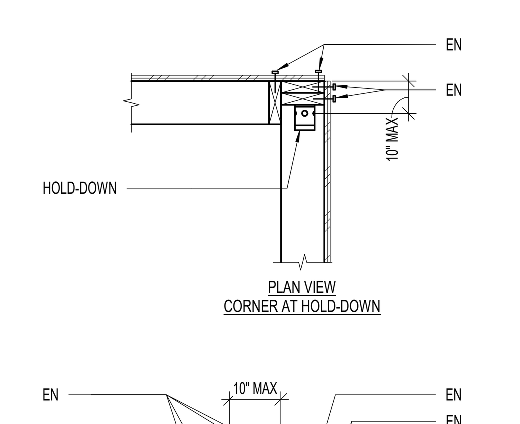

PLAN VIEW
CORNER AT HOLD-DOWN

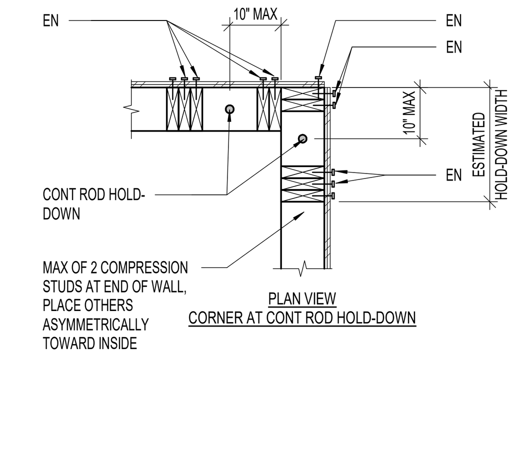

PLAN VIEW
CORNER AT CONT ROD HOLD-DOWN

7 / S-803 SHEAR WALL SCHEDULE AND TYPICAL DETAILS
NO SCALE:
T-850-06

APRIL 16, 2026
PERMIT SET

NOTE:
THESE STRUCTURAL DRAWINGS ARE BASED ON ARCHITECTURAL DRAWINGS DATED APRIL 16, 2026

DIMENSIONS AND ELEVATIONS, AS THEY RELATE TO THE BUILDING IN GENERAL, i.e. GRID TO GRID DIMENSIONS OR DECK BEARING ELEVATIONS, ARE SUPPLIED BY THE ARCHITECT. THEY ARE PROVIDED ON THE STRUCTURAL PLANS AND DETAILS FOR THE CONVENIENCE OF THE CONTRACTOR. VERIFY DIMENSIONS AND ELEVATIONS WITH ARCHITECTURAL DRAWINGS.

Babcock Design

Salt Lake City
52 Exchange Place
Salt Lake City, UT 84111
801.531.1144

Boise
800 W Main Street, Suite 940
Boise, ID 83702
208.424.7675

babcockdesign.com

Consultant

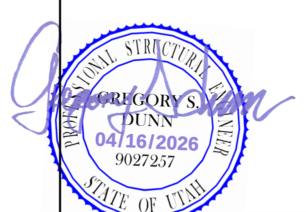

client name

ALPINE FIRE STATION

50 E 100 N ALPINE, UT 84004

Revisions

Num.	Description	Date

Project Number	25116
Original Issue	APRIL 16, 2026
Project Status	PERMIT SET

The information and content represented herein is considered by law the architect's instruments of service and are the property of Babcock Design. They are available for limited review and evaluation by clients, consultants, contractors, government agencies, vendors, and office personnel only in accordance with this notice. They are intended for use only for the project specified and are to be used for no other purpose or project including additions to or modification of the completed project. No part thereof may be copied, reproduced, photographed, modified, published, uploaded, transmitted, disclosed, sold, distributed to others in any way including in digital form, or otherwise used without the prior written consent of Babcock Design.

COPYRIGHT © 2025 BABCOCK DESIGN

Stamp

PRELIMINARY NOT FOR CONSTRUCTION
PRELIMINARY NOT FOR CONSTRUCTION

Sheet Title

WOOD SCHEDULES

Sheet Number

S-803

A-325 BOLT SCHEDULE

MAXIMUM BEAM SIZE IN EACH BEAM DEPTH GROUP	A-325N BOLTS	
	No. PER BEAM	SIZE
W8	2	7/8"Ø
W10	2	7/8"Ø
W12	3	7/8"Ø
W14	3	7/8"Ø
W16	4	7/8"Ø
W18	5	7/8"Ø
W21	6	7/8"Ø
W24	6	7/8"Ø
W27	7	7/8"Ø
W30	8	7/8"Ø
W33	9	7/8"Ø
W36	10	7/8"Ø
W40	11	7/8"Ø
W44	12	7/8"Ø

(1) CLIP ANGLES: L5x3 1/2. THICKNESS SHALL BE EQUAL TO ONE HALF THE BEAM WEB THICKNESS PLUS 1/16" (1/4" MIN). FOR TWO ROWS OF BOLTS OR SKEWED CONNECTIONS, USE BENT PLATES. WHERE COLUMN WIDTH IS SMALLER THAN THE CONNECTING CLIP ANGLES, ANGLE LEGS SHALL BE REDUCED TO MATCH WIDTH OF COLUMN.

(2) BEAM WEB CONNECTION PLATE THICKNESS EQUALS
3/8" MINIMUM THICK FOR W18 BEAMS OR SMALLER
1/2" MINIMUM THICK FOR W21 BEAMS OR LARGER
3/4" MINIMUM THICK FOR BEAMS WITH WEB GREATER THAT 1" THICK

(3) FILLET WELDS SHALL BE AS FOLLOWS:
1/4" FOR 3/8" PLATES
5/16" FOR 1/2" PLATES
7/16" FOR 3/4" PLATES

(4) THICKNESS EQUALS BEAM FLANGE THICKNESS OF BEAM FRAMING INTO COLUMN WEB (3/8" MINIMUM).

(5) BOLT EDGE DISTANCE SHALL BE 1 1/2" MINIMUM AT ALL EDGES. BOLT SPACING SHALL BE AT 3". BOLT SPACING MAY BE REDUCED TO 3x THE BOLT DIAMETER IF IT IS REQUIRED FOR A SINGLE ROW OF BOLTS. A SINGLE ROW OF BOLTS IS PREFERRED.

(6) WHEN MORE THAN ONE COLUMN OF BOLTS IS NEEDED, THE FIRST COLUMN SHALL BE COMPLETE WITH THE REMAINDER OF THE BOLTS PLACED IN THE SECOND COLUMN.

(7) 1/2" PLATE THICKNESS + 5/16"

(8) AT CONTRACTOR'S OPTION, HOLES FOR WEB PLATES MAY BE PROVIDED AS HORIZONTAL AISC SHORT SLOTTED HOLES.

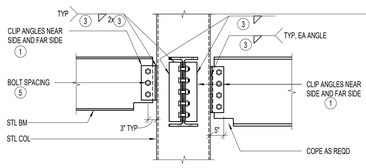

BEAM TO HSS COLUMN CONNECTION

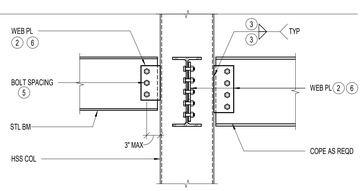

ALTERNATE BEAM TO HSS COLUMN CONNECTION

(THIS DETAIL MAY BE USED AS AN ALTERNATE AT LOCATIONS WHERE THE WEB PLATE THICKNESS DOES NOT EXCEED 1.6 TIMES THE COLUMN WALL THICKNESS.)
(THIS DETAIL MAY NOT BE USED AT THE FOLLOWING COLUMN SIZES.
HSS16x16x5/8, HSS16x16x5/16
HSS14x14x5/16, HSS12x12x5/16
HSS12x12x1/4, HSS10x10x1/4

1 S-804 TYPICAL BOLTED WEB PLATE CONNECTIONS WITH BOLT SCHEDULE (SINGLE SHEAR)

NO SCALE

T-40544

STEEL COLUMN NOTES:

1. ALL ANCHOR BOLTS SHALL BE ASTM F1554 GRADE 55 (AT CONTRACTOR'S OPTION, GRADE 55 ANCHORS MAY BE SUBSTITUTED WITH GRADE 105 ANCHORS). UNLESS NOTED OTHERWISE, ALL COLUMNS SHALL BE INSTALLED WITH HEADED (OR DOUBLE NUT) ANCHOR BOLTS. PROJECT ANCHOR BOLTS 4" MINIMUM ABOVE THE TOP OF THE BASE PLATE.
2. ANCHOR BOLTS SHALL NOT BE WELDED (INCLUDING TACK WELDS).
3. IF DESIRED SPLICE LOCATIONS DIFFER FROM THOSE LEVELS SHOWN ON PLAN, NOTIFY STRUCTURAL ENGINEER PRIOR TO FABRICATION. WRITTEN APPROVAL REQUIRED.
4. ALL CAP PLATE BOLTS SHALL BE 3/4"ø BOLTS, TYPICAL UNLESS NOTED OTHERWISE.
5. ALL CAP PLATES TO BE 3/4" THICK, UNO.
6. SEE GENERAL STRUCTURAL NOTES FOR OTHER REQUIREMENTS.
7. ERECTION AIDS TO BE REMOVED AFTER COLUMN SPLICING.
8. FOR HSS14x14 AND HSS16x16 COLUMNS, ANCHOR BOLTS SHOULD BE 1" DIAMETER WITH 12" EMBEDS W/ 3/8"x3" PLATE WASHERS. FOR HSS 12x12 COLUMNS OR SMALLER, ANCHOR BOLTS SHOULD BE 3/4"ø WITH 8" EMBEDS WITH 1/4"x2" PLATE WASHERS. FOR HSS10x10 COLUMNS OR SMALLER HSS COLUMNS, ASTM F1554 GRADE 36 RODS MAY BE SUBSTITUTED.
9. OVERSIZED HOLES MAY BE USED IN BASE PLATES PROVIDED THEY DO NOT EXCEED THE FOLLOWING SIZES:
   3/4"ø BOLT ≤ 1 1/16"ø
   1"ø BOLT ≤ 1 1/2"ø
   1 1/4" ø BOLT ≤ 1 7/8"ø
   1 1/2" ø BOLT ≤ 2 1/4"ø
10. HOLES IN PLATE WASHERS SHOULD BE 1/16" GREATER THAN BOLT DIMENSION.
11. NON-SHRINK GROUT UNDER BASE PLATES SHALL BE 1 1/2" THICK UNO.
12. COLUMN LOCATIONS SHOWN ON SCHEDULE ARE APPROXIMATE. PLEASE SEE ARCHITECTURAL DRAWINGS FOR EXACT LOCATIONS.
13. DO NOT WELD IN WIDE FLANGE "K" ZONES. WELDS ARE NOT REQUIRED AT "K" ZONES.
14. WELDING OF PLATE WASHERS TO BASE PLATES MAY BE OMITTED AT SINGLE STORY COLUMNS AND HSS 6x6 COLUMNS OR SMALLER.

(A) = PLATE WASHER THICKNESS - 1/16" (MAX WELD SIZE 5/16")

(B) = 2" FOR HSS10x10 OTHERWISE 1".

15. SINGLE STORY COLUMNS DO NOT NEED TO HAVE PLATE WASHERS WELDED TO BASE PLATES.

BASE PL LEGEND:

'co' = 1/2" MINIMUM
'ed' = 2" MINIMUM
'bc' = 3" MINIMUM

CAP PL LEGEND:

'co' = 1/2" MINIMUM
'ed' = 1 1/2" MINIMUM
'bc' = BEAM OR GIRDER GAGE
'w' = BEAM OR GIRDER GAGE + 3" OR BEAM OR GIRDER FLANGE WIDTH + 1" OR COLUMN DEPTH + 1" WHICHEVER IS GREATER
'H' = BEAM OR GIRDER GAGE + 3" OR BEAM OR GIRDER FLANGE WIDTH + 1" OR COLUMN WIDTH + 1" WHICHEVER IS GREATER

STEEL COLUMN BASE PLATE TYPES:

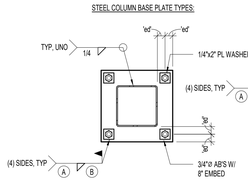

BASE PL SBP-1
SEE STL COL NOTES THIS SHEET

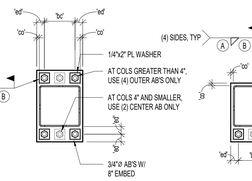

BASE PL SBP-2
SEE STL COL NOTES THIS SHEET

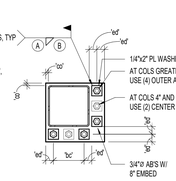

BASE PL SBP-3
SEE STL COL NOTES THIS SHEET

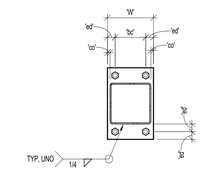

CAP PL SCP-1

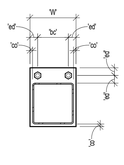

CAP PL SCP-2

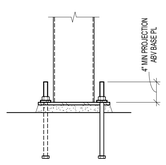

BASE PL ELEVATION

2 S-804 STEEL COLUMN SCHEDULE FOR SEISMIC DESIGN CATEGORIES C THRU F

NO SCALE

T-40542

Original drawing is 30" x 42" Autodesk Docs://25116 - ALPINE FIRE STATION 2022/250287 Alpine Fire Station_S725.rvt

Current as of: 4/16/2026 1:37:56 PM

Babcock Design

Salt Lake City
52 Exchange Place
Salt Lake City, UT 84111
801.531.1144

Boise
800 W Main Street, Suite 940
Boise, ID 83702
208.424.7675

babcock**design**.com

Consultant

client name

ALPINE FIRE STATION

50 E 100 N ALPINE, UT 84004

Revisions

Num.	Description	Date
Blanks		Date 1

Project Number	25116
Original Issue	APRIL 16, 2026
Project Status	PERMIT SET

The information and content represented herein is considered by law the architect's instruments of service and are the property of Babcock Design. They are available for limited review and evaluation by clients, consultants, contractors, government agencies, vendors, and office personnel only in accordance with this notice. They are intended for use only for the project specified and are to be used for no other purpose or project including additions to or modification of the completed project. No part thereof may be copied, reproduced, photographed, modified, published, uploaded, posted, transmitted, sold, distributed to others in any way including in digital form, in others use used without the prior written consent of Babcock Design.

COPYRIGHT © 2020 BABCOCK DESIGN

Stamp

PRELIMINARY
NOT FOR CONSTRUCTION

APRIL 16, 2026
PERMIT SET

NOTE:
THESE STRUCTURAL DRAWINGS ARE BASED ON ARCHITECTURAL DRAWINGS DATED APRIL 16, 2026

DIMENSIONS AND ELEVATIONS, AS THEY RELATE TO THE BUILDING IN GENERAL, i.e. GRID TO GRID DIMENSIONS OR DECK BEARING ELEVATIONS, ARE SUPPLIED BY THE ARCHITECT. THEY ARE PROVIDED ON THE STRUCTURAL PLANS AND DETAILS FOR THE CONVENIENCE OF THE CONTRACTOR. VERIFY DIMENSIONS AND ELEVATIONS WITH ARCHITECTURAL DRAWINGS.

Sheet Title

STEEL SCHEDULES

Sheet Number

S-804

FIRE LEGEND

NOTE: NOT ALL SYMBOLS WILL BE USED ON ALL SHEETS.

FIRE SERVICE	
FIRE SPRINKLER RISER ASSEMBLY	
FREE STANDING FDC	
WALL TYPE FDC, FLUSH	
WALL TYPE FDC, SURFACE MOUNT	
FIRE HOSE CABINET	
ELECTRIC HORN & LIGHT	
EXPANSION JOINT	
EXPANSION PIPE CONNECTION	
BALL VALVE	
HEAT TRACING	
DIRECTION OF FLOW	
ELBOW DOWN	
ELBOW UP	
PIPE CAP	
REDUCER	
PIPE TEE	DOWN UP
UNION	
POINT OF CONNECTION	
POINT OF REMOVAL	
DETAIL TAG	DETAIL NO. DRAWING NO.
KEYED NOTE	X
SECTION CUT LINE	SECTION NO. DRAWING NO. 1 A101 SIM
ACCESS PANEL	

ABBREVIATIONS

	NOTE: NOT ALL ABBREVIATIONS WILL BE USED ON SHEETS.
AD	ACCESS DOOR
AF	AIRFOIL
AFF	ABOVE FINISHED FLOOR
ALT	ALTERNATE
BI	BACKWARD INCLINE
BOD	BOTTOM OF DUCT
BOP	BOTTOM OF PIPE
BTUH	BRITISH THERMAL UNITS PER HOUR
CAP	CAPACITY
CAS	COMBUSTION AIR SUPPLY
CBV	CALIBRATED BALANCE VALVE
CFM	CUBIC FEET PER MINUTE
CV	CONSTANT VOLUME
CV	CONTROL VALVE
DB	DRY BULB
DF	DRINKING FOUNTAIN
DIA	DIAMETER
DN	DOWN
DSN	DOWN SPOUT NOZZLE
DW	DISHWASHER
E	EXISTING
EA	EACH OR EXHAUST AIR
EAT	ENTERING AIR TEMPERATURE
EFF	EFFICIENCY
ELEV	ELEVATION
ENCL	ENCLOSURE
ESP	EXTERNAL STATIC PRESSURE
ET	EXPANSION TANK
EWC	ELECTRIC WATER COOLER
EWT	ENTERING WATER TEMPERATURE
FCO	FLOOR CLEAN OUT
FD	FLOOR DRAIN
FO	FLAT OVAL
FPM	FEET PER MINUTE
FS	FLOOR SINK
FT	FEET
FV	FACE VELOCITY
GA	GAUGE
GAL	GALLON
GD	GARAGE DRAIN
GEA	GREASE EXHAUST AIR
GPM	GALLONS PER MINUTE
HP	HORSE POWER
HR	HOUR
HT	HEIGHT
IN	INCH
IN WC	INCHES OF WATER COLUMN
IN WG	INCHES OF WATER GAUGE
L	LAVATORY OR LOUVER
LAT	LEAVING AIR TEMPERATURE
LBS	POUNDS
LWT	LEAVING WATER TEMPERATURE
MAX	MAXIMUM
MBH	THOUSAND BRITISH THERMAL UNITS
MECH	MECHANICAL
MIN	MINIMUM
MPSA	MEDIUM PRESSURE SUPPLY AIR
MUA	MAKE-UP AIR
MVD	MANUAL VOLUME DAMPER
NC	NOISE CRITERIA OR NORMALLY CLOSED
NIC	NOT IN CONTRACT
NO	NUMBER
NOM	NOMINAL
NTS	NOT TO SCALE
OA	OUTSIDE AIR
OBD	OPPOSED BLADE DAMPER
OD	OVERFLOW DRAIN
OFCI	OWNER FURNISHED, CONTRACTOR INSTALLED
OFOI	OWNER FURNISHED, OWNER INSTALLED
PD	PRESSURE DROP
PG	PROPYLENE GLYCOL
POC	POINT OF CONNECTION
PRV	PRESSURE REDUCING VALVE
PSI	POUNDS PER SQUARE INCH
PSIG	POUNDS PER SQUARE INCH GAUGE
RA	RETURN AIR
RAD	RADIUS
RD	ROOF DRAIN
RLF	RELIEF AIR
RPBP	REDUCED PRESSURE BACKFLOW PREVENTOR
SA	SUPPLY AIR OR SHOCK ARRESTOR
SEN	SENSIBLE
SF	SQUARE FEET
SIM	SIMILAR
SL	SEA LEVEL
SP	STATIC PRESSURE
SS	SERVICE SINK OR STAINLESS STEEL
TA	TRANSFER AIR
TOD	TOP OF DUCT
TSP	TOTAL STATIC PRESSURE
TYP.	TYPICAL
U	URINAL
V	VENT
VAV	VARIABLE AIR VOLUME
VD	VOLUME DAMPER
VENT	FLUE VENT
VFD	VARIABLE FREQUENCY DRIVE
VOL	VOLUME
VTR	VENT THROUGH THE ROOF
W	WASTE
W/	WITH
W/O	WITHOUT
WB	WET BULB
WC	WATER CLOSET
WCO	WALL CLEANOUT
WHA	WATER HAMMER ARRESTOR
WPD	WATER PRESSURE DROP
WT	WEIGHT
Ø	ROUND OR DIAMETER

DRAWING INDEX - FIRE

#	SHEET NAME
FP001	FIRE LEGEND, SYMBOLS & ABBREVIATIONS
FP112	LEVEL 1 FIRE PROTECTION PLAN

Copyright (C) 2025 by Colvin Engineering Associates, Inc. Salt Lake City, Utah. All rights reserved. Unauthorized copying and/or use is illegal and subject to prosecution.

Current as of: 4/16/2026 1:20:01 PM

Original drawing is 30" x 42" Autodesk Docs://25116 - ALPINE FIRE STATION 2026/MECH.2025.095.00.Alpine Fire Station 2026 V25.rvt

PROJECT DESIGN TEAM

Project Manager: Rob Van , 801-505-5404 , rvan@cea-ut.com
Designer: Yonadab De La Cruz , 385-528-1251 , ydelacruz@cea-ut.com
BIM Modeler: Danette Marcoccia , 801-505-5393 , dmarcoccia@cea-ut.com

Babcock Design

Salt Lake City
52 Exchange Place
Salt Lake City, UT 84111
801.531.1144

Boise
800 W Main Street, Suite 940
Boise, ID 83702
208.424.7675

babcock**design**.com

Consultant

COLVIN ENGINEERING ASSOCIATES
505 East South Temple, Ste 100
Salt Lake City, Utah 84102-1004
Phone 801.322.2400
colvinengineering.com

CITY OF ALPINE

ALPINE FIRE STATION

50 E 100 N ALPINE, UT 84004

Revisions

Num.	Description	Date

Project Number	25116
Original Issue	04.16.2026
Project Status	CONSTRUCTION DOCUMENTS

The information and content represented herein is considered by law the architect's instruments of service and are the property of Babcock Design. They are available for limited review and evaluation by clients, contractors, and public officials in connection with this project. Unauthorized use is prohibited by law. See this notice. They are intended for use only for the project specified and are to be used for no other purpose or project including additions to or modification of the completed project. No part thereof may be copied, reproduced, photographed, modified, published, uploaded, transmitted, disclosed, sold, distributed to others in any way including in digital form, or otherwise used without the prior written consent of Babcock Design.

COPYRIGHT © 2025 BABCOCK DESIGN

Stamp

Sheet Title

FIRE LEGEND, SYMBOLS & ABBREVIATIONS

Sheet Number

FP001

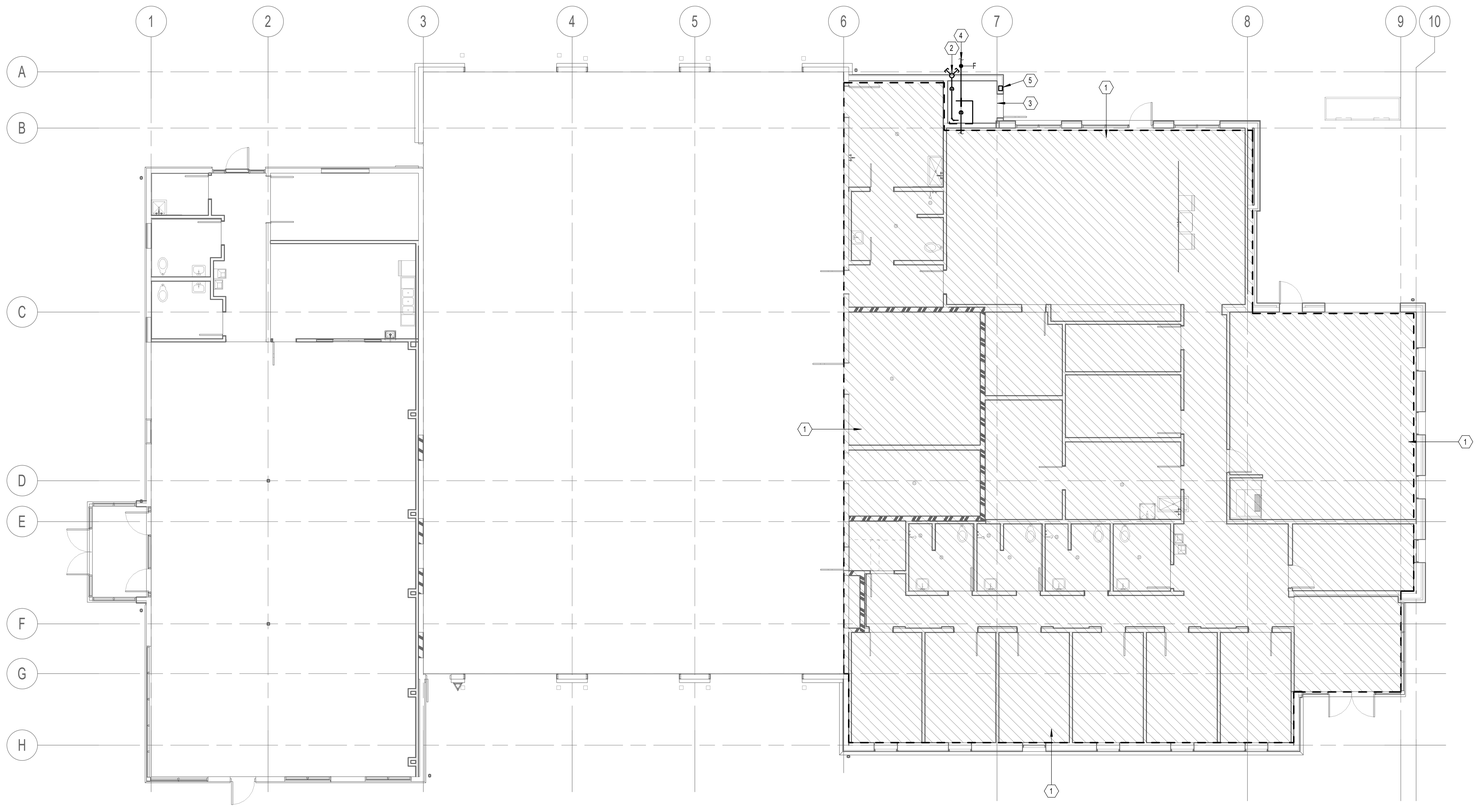

1 LEVEL 1 FIRE PROTECTION PLAN

SCALE: 1/8" = 1'-0"

FIRE SPRINKLER GENERAL NOTES

1. NEW SPRINKLER HEADS TO MATCH CEILING TYPE. COORDINATE ARCHITECTURAL SHEETS.
2. FURNISH AND INSTALL NEW PIPE, FITTINGS AND SPRINKLER HEADS AS REQUIRED TO COMPLETE THE WORK.
3. ALL PIPING SHALL BE DOMESTIC.
4. FITTINGS SHALL BE THREADED, WELDED AND GROOVED IN ACCORDANCE WITH LISTING AND NFPA #13 REQUIREMENTS.
5. PLAIN END OR MECHANICAL TEES SHALL NOT BE USED, UNLESS REQUIRED FOR FIELD MODIFICATION OF PIPING SYSTEM.
6. THE SPRINKLER CONTRACTOR SHALL COORDINATE WITH OTHER TRADES AND PROVIDE ADDITIONAL OFFSETS AS REQUIRED FOR INSTALLATION. SPRINKLER PIPING SHALL BE REROUTED AS REQUIRED WHERE CONFLICTS OCCUR. SPRINKLER CONTRACTOR'S PRICING SHALL INCLUDE ANY PIPING OFFSETS, OR REVISED CUT LENGTHS.
7. SHOP DRAWINGS SHALL BE PROVIDED BY THE SPRINKLER CONTRACTOR USING AN REVIT COMPATIBLE FORMAT. SUBMIT TO OWNERS INSURANCE REVIEW CONSULTANT AND ARCHITECT AND ENGINEER. AS-BUILT DRAWINGS AND ELECTRONIC DRAWING FILES SHALL BE PROVIDED AT END OF PROJECT BY CONTRACTOR.
8. FIRE SPRINKLER SHOP DRAWINGS, CALCULATIONS AND MATERIALS SHALL BE SUBMITTED AND REVIEWED BY ENGINEER PRIOR TO SUBMITTING TO OTHER AUTHORITIES HAVING JURISDICTION.
9. PRESSURE TEST AND CERTIFY SPRINKLER SYSTEM.
10. PIPE ROUTING, ELEVATIONS, SPRINKLER LOCATIONS, ARE SCHEMATIC, SHALL BE USED AS REFERENCE ONLY. INSTALLER SHALL FIELD VERIFY CONDITIONS, AND PROVIDE OFFSETS AS REQUIRED FOR INSTALLATION. DEVIATION FROM SCHEMATIC PLAN SHALL BE APPROVED IN WRITING BY THE ENGINEER, PRIOR TO INSTALLATION.
11. NEW FIRE PROTECTION WORK TO INCLUDE HEADS AND PIPING SYSTEM AS REQUIRED TO MEET NFPA REQUIREMENTS.
12. NEW PIPING TO BE SCHEDULE 40 STEEL PIPE LISTED FOR FIRE PROTECTION.
13. SEE ARCHITECTURAL PLANS FOR CEILING HEIGHTS.
14. SUBMIT FIRE PROTECTION DRAWINGS TO LANDLORD'S/OWNER'S INSURANCE REVIEW CONSULTANT.
15. COORDINATE PIPE ROUTING WITH OTHER TRADES.
16. TIGHT CEILING SPACE WILL REQUIRE SOME SPRINKLER LINES TO OFFSET OVER OR UNDER DUCTWORK, PIPE, OR OTHER OBSTACLES. PROVIDE DRAINS AS REQUIRED.

KEYED NOTES

1. AREA(S) SHOWN TO BE PROTECTED WITH A SPRINKLER SYSTEM MEETING THE REQUIREMENTS OUTLINED IN NFPA 13.
2. FIRE DEPARTMENT CONNECTION. COORDINATE EXACT LOCATION WITH ARCHITECTURAL PLANS.
3. PROVIDE IDENTIFICATION SIGNS AT THE FIRE SPRINKLER RISER ROOM TO SAY: FIRE SPRINKLER RISER ROOM AND CONTROL VALVES ACCESS.
4. EXTEND FIRE PROTECTION PIPING OUTSIDE OF BUILDING 5 FT. FOR CONTINUATION BY CIVIL. EXACT LOCATIONS & ELEVATIONS ARE TO BE COORDINATED WITH CIVIL CONTRACTOR.
5. PROVIDE FIRE ALARM, STROBE LIGHT AND EXTERIOR WALL MOUNTED KNOX BOX THAT HOLDS ALL THE NECESSARY KEYS FOR THE FIRE DEPARTMENT.

Copyright (C) 2025 by Colvin Engineering Associates, Inc. Salt Lake City, Utah. All rights reserved. Unauthorized copying and/or use is illegal and subject to prosecution.

Current as of: 4/16/2026 1:20:04 PM

Original drawing is 30" x 42" Autodesk Docs://25116 - ALPINE FIRE STATION 2026/MECH-2025.095.00 Alpine Fire Station 2026 V25.rvt

Babcock Design

Salt Lake City
52 Exchange Place
Salt Lake City, UT 84111
801.531.1144

Boise
800 W Main Street, Suite 940
Boise, ID 83702
208.424.7675

babcock**design**.com

Consultant

COLVIN ENGINEERING ASSOCIATES
505 East South Temple, Ste 100
Salt Lake City, Utah 84102-1004
Phone 801.322.2400
colvinengineering.com

CITY OF ALPINE

ALPINE FIRE STATION

50 E 100 N ALPINE, UT 84004

Revisions

Num.	Description	Date

Project Number	25116
Original Issue	04.16.2026
Project Status	CONSTRUCTION DOCUMENTS

The information and content represented herein is considered by law the architect's instruments of service and are the property of Babcock Design. They are available for limited review and evaluation by clients, governmental agencies, and contractors for bidding or construction purposes on the project specified in this notice. They are intended for use only for the project specified and are to be used for no other purpose or project including additions to or modification of the completed project. No part thereof may be copied, reproduced, photographed, modified, published, uploaded, transmitted, disclosed, sold, distributed to others in any way including in digital form, or otherwise used without the prior written consent of Babcock Design.

COPYRIGHT © 2025 BABCOCK DESIGN

Stamp

Sheet Title

LEVEL 1 FIRE PROTECTION PLAN

Sheet Number

FP112

Copyright (C) 2025 by Colvin Engineering Associates, Inc. Salt Lake City, Utah. All rights reserved. Unauthorized copying and/or use is illegal and subject to prosecution.

MECHANICAL GENERAL NOTES

1. DO NOT SCALE DRAWINGS. SEE ARCHITECTURAL DRAWINGS AND REFLECTED CEILING PLAN FOR EXACT LOCATION OF DOORS, WINDOWS, CEILING DIFFUSERS, ETC. CLOSELY COORDINATE NEW MECHANICAL WITH ALL NEW AND EXISTING MECHANICAL, ELECTRICAL, ARCHITECTURAL AND STRUCTURAL MEMBERS. DUCTWORK AND PIPE ROUTING IS APPROXIMATE, DIAGRAMMATIC AND IS NOT TO BE SCALED. PROVIDE ALTERNATE ROUTING, OFFSETS AND TRANSITIONS AS REQUIRED FOR COORDINATION OF ALL WORK WITHOUT ADDITIONAL COST TO THE OWNER.
2. FIELD VERIFY ALL MECHANICAL AND PLUMBING ITEMS PRIOR TO COMMENCING NEW WORK. NO ADDITIONAL PAYMENT WILL BE ALLOWED FOR CONTRACTOR'S FAILURE TO BECOME FAMILIAR WITH EXISTING CONDITIONS.
3. ALL MECHANICAL WORK SHALL BE COORDINATED WITH THE WORK PERFORMED UNDER OTHER DIVISIONS TO AVOID INTERFERENCE.
4. DO NOT SHUT-OFF/PUT OUT SERVICE ANY SYSTEMS/SERVICES WITHOUT FIRST COORDINATING ALL DOWNTIME WITH THE OWNER'S PERSONNEL.
5. INSTALL ALL EQUIPMENT PER MANUFACTURERS RECOMMENDATIONS AND INSTRUCTIONS.
6. DUCT DIMENSIONS SHOWN ARE INSIDE CLEAR DIMENSIONS.
7. CONSTRUCT ALL OTHER DUCTWORK ACCORDING TO SMACNA STANDARDS FOR LOW PRESSURE DUCT CONSTRUCTION - 2 INWG PRESSURE CLASS, SEAL CLASS "A". FIBERGLASS DUCTWORK IS UNACCEPTABLE.
8. LINE ALL LOW PRESSURE RECTANGULAR DUCT WITH 1" - 1.5 LBS/CU.FT. DUCT LINER PIN LINER ON 12" CENTERS. TRIM AND SEAL JOINTS.
9. ALL EQUIPMENT, DUCTWORK AND PIPING SHALL BE SEISMICALLY RESTRAINED IN ACCORDANCE WITH THE LOCAL CODE. ALL DETAILS AND DRAWINGS REQUIRED BY LOCAL AUTHORITY WILL BE PRODUCED BY LICENSED SEISMIC ENGINEER HIRED BY CONTRACTOR. (DEFERRED SUBMITTAL).
10. COORDINATE ALL FIRE SPRINKLER, DIFFUSER AND GRILLE LOCATIONS WITH REFLECTED CEILING PLAN AND ELECTRICAL DRAWINGS. (DEFERRED SUBMITTAL).
11. ALL VALVES AND PIPING SPECIALTIES SHALL BE LINE SIZED UNLESS NOTED OTHERWISE. USE ECCENTRIC REDUCERS ON CONTROL VALVES WHERE REQUIRED.
12. ALL PIPING, DUCTS, VENTS, ETC. EXTENDING THROUGH THE WALL AND/OR ROOF SHALL BE FLASHED AND COUNTERFLASHED IN A WATERPROOF MANNER.
13. ALL PIPING INSULATION SHALL RUN CONTINUOUSLY THROUGH FLOOR, WALLS, AND PARTITIONS.
14. ALL PIPING SHALL BE SUPPORTED ADJACENT TO EQUIPMENT, TO PREVENT WEIGHT OF PIPING BEING PLACED ON EQUIPMENT.
15. GENERAL CONTRACTOR SHALL FURNISH AND INSTALL ALL SUPPORTING ANGLES AND EXTRA SUPPORT BEAMS FOR A.C. UNITS, EXHAUST FANS, ETC.
16. HVAC CONTRACTOR SHALL CHANGE OUT THE EQUIPMENT FILTERS AT THE TIME OF POSSESSION OF THE PROJECT BY THE TENANT, USING ONLY NEW FILTERS OF THE PROPER SIZE AND TYPE.
17. THE HVAC CONTRACTOR SHALL LEAVE HIS WORK IN PERFECT WORKING CONDITION AND SHALL GUARANTEE SAME FOR A PERIOD OF TWELVE (12) MONTHS FROM DATE OF FINAL ACCEPTANCE.
18. PROVIDE IDENTIFICATION LABELS ON ALL EQUIPMENT, PIPING, VALVES, CONTROLS, ETC. TO MATCH EXISTING BUILDING LABELING STANDARD AND INCLUDING TENANT NAME AND SPACE NUMBER.
19. DUCT INTERIORS VISIBLE THROUGH REGISTERS, GRILLES, AND DIFFUSERS SHALL BE FLAT BLACK.
20. PROVIDE ASBUILT DRAWINGS AND SUBMIT TO ENGINEER.
21. PROVIDE SUBMITTALS ON ITEMS LISTED IN MECHANICAL AND PLUMBING EQUIPMENT SCHEDULES TO THE ENGINEER FOR REVIEW PRIOR TO ORDER, PURCHASE OR INSTALLATION.
22. CONTRACTOR SHALL REPAIR, REPLACE AND REPAINT TO MATCH EXISTING SURFACES DISTURBED BY THE CONTRACTOR DURING INSTALLATION OF ANY MATERIALS OR EQUIPMENT. THIS INCLUDES CUTTING OF ANY CEILINGS, WALLS OR FLOORS FOR THE INSTALLATION OF ANY PLUMBING OR MECHANICAL MATERIALS OR EQUIPMENT.
23. HVAC CONTRACTOR SHALL REMOVE FROM THE JOBSITE ANY MATERIALS NOT ECONOMICALLY RECOVERABLE. ANY MATERIALS REMOVED FROM THE JOBSITE AND SOLD FOR SALVAGE SHALL BE CREDITED TO THE OWNERS ACCOUNT.
24. INSTALL ALL MECHANICAL SYSTEMS IN ACCORDANCE WITH THE 2021 INTERNATIONAL BUILDING CODE, 2021 INTERNATIONAL MECHANICAL CODE, 2021 INTERNATIONAL FIRE CODE AND 2021 INTERNATIONAL PLUMBING CODE.
25. PROVIDE OPERATION AND MAINTENANCE MANUALS AND SUBMIT TO ENGINEER.

CONTROL NOTES

1. VRF SYSTEMS ARE TO BE STAND-ALONE. EQUIPMENT IS TO BE PROVIDED WITH THE CAPABILITY FOR FUTURE CONNECTION TO A BUILDING AUTOMATION SYSTEM. BACNET CARDS ARE TO BE PROVIDED AS PER THE SCHEDULE SHEET.

MECHANICAL LEGEND

NOTE: NOT ALL SYMBOLS WILL BE USED ON ALL SHEETS.

Description	Symbol
GATE VALVE	
OS & Y PATTERN GATE VALVE	
BALL VALVE	
BUTTERFLY VALVE	
MOTORIZED ACTUATOR	M M
PLUG VALVE	
CHECK VALVE (SWING OR LIFT AS REQ'D)	
SOLENOID VALVE	
AUTOMATIC CONTROL VALVE (2-WAY)	
AUTOMATIC CONTROL VALVE (3-WAY)	
PRESSURE REDUCING VALVE	
P&T RELIEF VALVE	
AIR VENT (AUTOMATIC)	
THERMAL EXPANSION VALVE	
STRAINER W/ BLOW DOWN HOSE FITTING	
CALIBRATED BALANCE VALVE	
VENTURI FLOW METER	
PET COCK OR GAUGE COCK	
PRESSURE GAUGE W/ GAUGE COCK	
THERMOMETER	
TEMPERATURE & PRESSURE TEST PLUG	
IN-LINE PUMP	
FLOW SWITCH	F
AQUASTAT	A
FLOW METER	FM
TEMPERATURE SENSING WELL	T
EXPANSION JOINT	
EXPANSION PIPE CONNECTION	
DIRECTION OF FLOW	
ELBOW DOWN	
ELBOW UP	
PIPE CAP	
REDUCER	
PIPE TEE	DOWN
UNION	UP
HEAT TRACING	
POINT OF CONNECTION	
POINT OF REMOVAL	
DETAIL TAG	DETAIL NO. - DRAWING NO. -
KEYED NOTE	X
SECTION CUT LINE	SECTION NO. 1 DRAWING NO. A101 SIM
ACCESS PANEL	
BURIED OR UNDERFLOOR DUCT (IN) FIRST FIGURE IS SIDE SHOWN	18/12
DUCT SIZE (IN) FIRST FIGURE IS SIDE SHOWN	18/12
FLEXIBLE DUCT (HELICAL)	
FLEXIBLE DUCT CONNECTION	
SPIN-IN W/ MVD	
DUCT TRANSITION	
ELBOW W/ TURNING VANES	
TEE W/ 45° ENTRY	
WYE W/ 45° ENTRY	
LINEAR RETURN SLOT DIFFUSER	
LINEAR SUPPLY SLOT DIFFUSER	
RADIAL SUPPLY DIFFUSERS	
RETURN GRILLE	
SUPPLY DIFFUSER	
EXHAUST GRILLE	
EXHAUST AIR DUCT	
EXHAUST AIR DUCT SECTION	
RETURN AIR DUCT	
RETURN AIR DUCT SECTION	
SUPPLY AIR DUCT	
SUPPLY AIR DUCT SECTION	
AIR FLOW STATION	F
COMBINATION FIRE/SMOKE DAMPER	FS
FIRE DAMPER	F
SMOKE DAMPER	S
MANUAL VOLUME DAMPER	
MOTORIZED DAMPER	M
GRAVITY BACKDRAFT DAMPER	G
THERMOSTAT OR TEMP SENSOR W/ EQUIPMENT TAG	T TAG
HUMIDISTAT OR HUMIDITY SENSOR	H
CARBON MONOXIDE SENSOR	CO
CARBON DIOXIDE SENSOR	C_2
NITROGEN DIOXIDE SENSOR	N
CHILLED WATER RETURN	X" CHR
CHILLED WATER SUPPLY	X" CHS
CONDENSER WATER RETURN	X" CR
CONDENSER WATER SUPPLY	X" CS
HEATING WATER RETURN	X" HWR
HEATING WATER SUPPLY	X" HWS
RADIANT FLOOR RETURN	X" RFR
RADIANT FLOOR SUPPLY	X" RFS
REFRIGERANT LIQUID	X" RL
REFRIGERANT SUCTION	X" RS
SNOWMELT RETURN	X" SMR
SNOWMELT SUPPLY	X" SMS
STEAM	X" ST
STEAM CONDENSATE RETURN	X" SCR
GROUND LOOP RETURN	X" GLR
GROUND LOOP SUPPLY	X" GLS
HOT GAS	X" HG
HOT GAS BYPASS	X" HGBP

ABBREVIATIONS

NOTE: NOT ALL ABBREVIATIONS WILL BE USED ON SHEETS.

AD	ACCESS DOOR
AF	AIRFOIL
AFF	ABOVE FINISHED FLOOR
ALT	ALTERNATE
BI	BACKWARD INCLINE
BOD	BOTTOM OF DUCT
BOP	BOTTOM OF PIPE
BTU/H	BRITISH THERMAL UNITS PER HOUR
CAP	CAPACITY
CAS	COMBUSTION AIR SUPPLY
CBV	CALIBRATED BALANCE VALVE
CFM	CUBIC FEET PER MINUTE
CV	CONSTANT VOLUME
CV	CONTROL VALVE
DB	DRY BULB
DF	DRINKING FOUNTAIN
DIA	DIAMETER
DN	DOWN
DSN	DOWN SPOUT NOZZLE
DW	DISHWASHER
E	EXISTING
EA	EACH OR EXHAUST AIR
EAT	ENTERING AIR TEMPERATURE
EFF	EFFICIENCY
ELEV	ELEVATION
ENCL	ENCLOSURE
ESP	EXTERNAL STATIC PRESSURE
ET	EXPANSION TANK
EWC	ELECTRIC WATER COOLER
EWT	ENTERING WATER TEMPERATURE
FCO	FLOOR CLEAN OUT
FD	FLOOR DRAIN
FO	FLAT OVAL
FPM	FEET PER MINUTE
FS	FLOOR SINK
FT	FEET
FV	FACE VELOCITY
GA	GAUGE
GAL	GALLON
GD	GARAGE DRAIN
GEA	GREASE EXHAUST AIR
GPM	GALLONS PER MINUTE
HP	HORSE POWER
HR	HOUR
HT	HEIGHT
IN	INCH
IN WC	INCHES OF WATER COLUMN
IN WG	INCHES OF WATER GAUGE
L	LAVATORY OR LOUVER
LAT	LEAVING AIR TEMPERATURE
LBS	POUNDS
LWT	LEAVING WATER TEMPERATURE
MAX	MAXIMUM
MBH	THOUSAND BRITISH THERMAL UNITS
MECH	MECHANICAL
MIN	MINIMUM
MPSA	MEDIUM PRESSURE SUPPLY AIR
MUA	MAKE-UP AIR
MVD	MANUAL VOLUME DAMPER
NC	NOISE CRITERIA OR NORMALLY CLOSED
NIC	NOT IN CONTRACT
NO	NUMBER
NOM	NOMINAL
NTS	NOT TO SCALE
OA	OUTSIDE AIR
OBD	OPPOSED BLADE DAMPER
OD	OVERFLOW DRAIN
OFCI	OWNER FURNISHED, CONTRACTOR INSTALLED
OFOI	OWNER FURNISHED, OWNER INSTALLED
PD	PRESSURE DROP
PG	PROPYLENE GLYCOL
POC	POINT OF CONNECTION
PRV	PRESSURE REDUCING VALVE
PSI	POUNDS PER SQUARE INCH
PSIG	POUNDS PER SQUARE INCH GAUGE
RA	RETURN AIR
RAD	RADIUS
RD	ROOF DRAIN
RLF	RELIEF AIR
RPBP	REDUCED PRESSURE BACKFLOW PREVENTOR
SA	SUPPLY AIR OR SHOCK ARRESTOR
SEN	SENSIBLE
SF	SQUARE FEET
SIM	SIMILAR
SL	SEA LEVEL
SP	STATIC PRESSURE
SS	SERVICE SINK OR STAINLESS STEEL
TA	TRANSFER AIR
TOD	TOP OF DUCT
TSP	TOTAL STATIC PRESSURE
TYP.	TYPICAL
U	URINAL
V	VENT
VAV	VARIABLE AIR VOLUME
VD	VOLUME DAMPER
VENT	FLUE VENT
VFD	VARIABLE FREQUENCY DRIVE
VOL	VOLUME
VTR	VENT THROUGH THE ROOF
W	WASTE
W/	WITH
W/O	WITHOUT
WB	WET BULB
WC	WATER CLOSET
WCO	WALL CLEANOUT
WHA	WATER HAMMER ARRESTOR
WPD	WATER PRESSURE DROP
WT	WEIGHT
Ø	ROUND OR DIAMETER

DRAWING INDEX - MECHANICAL

#	SHEET NAME
M001	MECHANICAL LEGEND, SYMBOLS & ABBREVIATIONS
MD112	LEVEL 1 MECHANICAL DEMO PLAN
MD131	ROOF MECHANICAL DEMO PLAN
MH112	LEVEL 1 MECHANICAL PLAN
MH131	ROOF MECHANICAL PLAN
MH401	ENLARGED MECHANICAL PLANS
MH402	ENLARGED MECHANICAL PLANS
MH501	MECHANICAL DETAILS
MH601	MECHANICAL SCHEDULES
MI112	LEVEL 1 TEMPERATURE CONTROL ZONE
MH801	MECHANICAL 3D VIEWS
MP112	LEVEL 1 REFRIGERANT PIPING PLAN

Babcock Design

Salt Lake City
52 Exchange Place
Salt Lake City, UT 84111
801.531.1144

Boise
800 W Main Street, Suite 940
Boise, ID 83702
208.424.7675

babcockdesign.com

Consultant

COLVIN ENGINEERING ASSOCIATES
505 East South Temple, Ste 100
Salt Lake City, Utah 84102-1004
Phone 801.322.2400
colvinengineering.com

CITY OF ALPINE

ALPINE FIRE STATION

50 E 100 N ALPINE, UT 84004

Revisions

Num.	Description	Date

Project Number 25116
Original Issue 04.16.2026
Project Status CONSTRUCTION DOCUMENTS

The information and content represented herein is considered by law the architect's instruments of service and are the property of Babcock Design. They are available for limited review and evaluation by clients, consultants, contractors, government agencies, vendors, and office personnel only in accordance with this notice. They are intended for use only for the project specified and are to be used for no other purpose or project including additions to or modification of the completed project. No part thereof may be copied, reproduced, photographed, modified, published, uploaded, transmitted, disclosed, sold, distributed to others in any way including in digital form, or otherwise used without the prior written consent of Babcock Design.

COPYRIGHT © 2025 BABCOCK DESIGN

Stamp

LICENSED PROFESSIONAL ENGINEER
STEPHEN G. CONNOR
187524
04/16/2026
STATE OF UTAH

PROJECT DESIGN TEAM

Project Manager: Rob Van , 801-505-5404 , rvan@cea-ut.com
Designer: Yonadab De La Cruz , 385-528-1251 , ydelacruz@cea-ut.com
BIM Modeler: Danette Marcoccia , 801-505-5393 , dmarcoccia@cea-ut.com

Sheet Title

MECHANICAL LEGEND, SYMBOLS & ABBREVIATIONS

Sheet Number

M001

1 LEVEL 1 MECHANICAL DEMO PLAN
SCALE: 1/4" = 1'-0"

GENERAL NOTES

1. ALL ITEMS SHOWN LIGHT ARE EXISTING.
2. ALL ITEMS SHOWN DASHED AND HATCHED ARE TO BE DEMOLISHED.
3. ALL ITEMS SHOWN DARK AND SOLID ARE NEW.
4. OFFSET NEW DUCT AS REQUIRED TO COORDINATE WITH OTHER TRADES.
5. DUCTWORK ABOVE GYP. BOARD CEILINGS SHALL BE HARD DUCTED.
6. CONTRACTOR SHALL PROVIDE ALL INCIDENTAL OFFSETS REQUIRED FOR COMPLETE OPERATIONAL MECHANICAL SYSTEMS.
7. A YOUNG TYPE GEAR REGULATOR SHALL BE USED ON ALL DAMPERS LOCATED ABOVE GYP. BOARD CEILINGS.
8. ROOMS WITH WALLS EXTENDING TO ABOVE CEILING TO BOTTOM OF DECK ARE REQUIRED TO HAVE TRANSFER AIR DUCTS AS SHOWN ON DRAWINGS.
9. COORDINATE MOUNTING HEIGHT OF AIR DEVICE GRILLS WITH EXPOSED CEILINGS WITH ARCHITECT AND OWNER.
10. BRANCH SIZE TO MATCH DIFFUSER NECK SIZE UNLESS NOTED OTHERWISE.
11. ALL DUCT TRANSITIONS FROM ROOF EQUIPMENT DROPS TO BE PER MANUFACTURER DRAWING SIZE.
12. DUCT DIMENSIONS SHOWN ARE INSIDE CLEAR DIMENSIONS.
13. EXHAUST GRILLES ARE TYPICALLY BELOW EXHAUST DUCTWORK. PLEASE REFER TO TAGS AND TYP. X NOTES TO AFFIRM HOW MANY GRILLES ARE IN SPACE.
14. ALL ROOFTOP EQUIPMENT TO MAINTAIN A MINIMUM OF 10'-0" FROM EDGE OF ROOF.
15. DUCT DROPS FROM ROOFTOP EQUIPMENT ARE TO MAINTAIN EQUIPMENT OPENING SIZE THROUGH PENETRATION OF BUILDING ENVELOPE. TRANSITION TO SIZES SHOWN ONCE INSIDE BUILDING.

KEYED NOTES

1 REMOVE EXISTING ROOFTOP UNITS LOCATED IN MECHANICAL WELL AND ALL ASSOCIATED DUCTWORK AND AIR DEVICES. ROOFTOP UNITS SHALL NOT BE REUSED. SALVAGE OF EXISTING REGISTERS, DIFFUSERS, AND GRILLES IS PERMITTED ONLY WHERE ITEMS ARE IN GOOD CONDITION AND CLEANED BY CONTRACTOR, SUBJECT TO OWNER APPROVAL.

Babcock Design

Salt Lake City
52 Exchange Place
Salt Lake City, UT 84111
801.531.1144

Boise
800 W Main Street, Suite 940
Boise, ID 83702
208.424.7675

babcockdesign.com

Consultant

COLVIN ENGINEERING ASSOCIATES
505 East South Temple, Ste 100
Salt Lake City, Utah 84102-1004
Phone 801.322.2400
colvinengineering.com

CITY OF ALPINE

ALPINE FIRE STATION

50 E 100 N ALPINE, UT 84004

Revisions

Num.	Description	Date

Project Number	25116
Original Issue	04.16.2026
Project Status	CONSTRUCTION DOCUMENTS

The information and content represented herein is considered by law the architect's instruments of service and are the property of Babcock Design. They are available for limited review and evaluation by clients, consultants, contractors, government agencies, vendors, and office personnel only in accordance with this notice. They are intended for use only for the project specified and are to be used for no other purpose or project including additions to or modification of the completed project. No part thereof may be copied, reproduced, photographed, modified, published, uploaded, transmitted, disclosed, sold, distributed to others in any way including in digital form, or otherwise used without the prior written consent of Babcock Design.

COPYRIGHT © 2025 BABCOCK DESIGN

Stamp

Sheet Title

LEVEL 1 MECHANICAL DEMO PLAN

Sheet Number

MD112

Copyright (C) 2025 by Colvin Engineering Associates, Inc. Salt Lake City, Utah. All rights reserved. Unauthorized copying and/or use is illegal and subject to prosecution.

Current as of: 4/16/2026 1:20:06 PM

Original drawing is 30" x 42" Autodesk Docs://25116 - ALPINE FIRE STATION 202/MECH 2025.095.00 Alpine Fire Station 202.V25.rvt

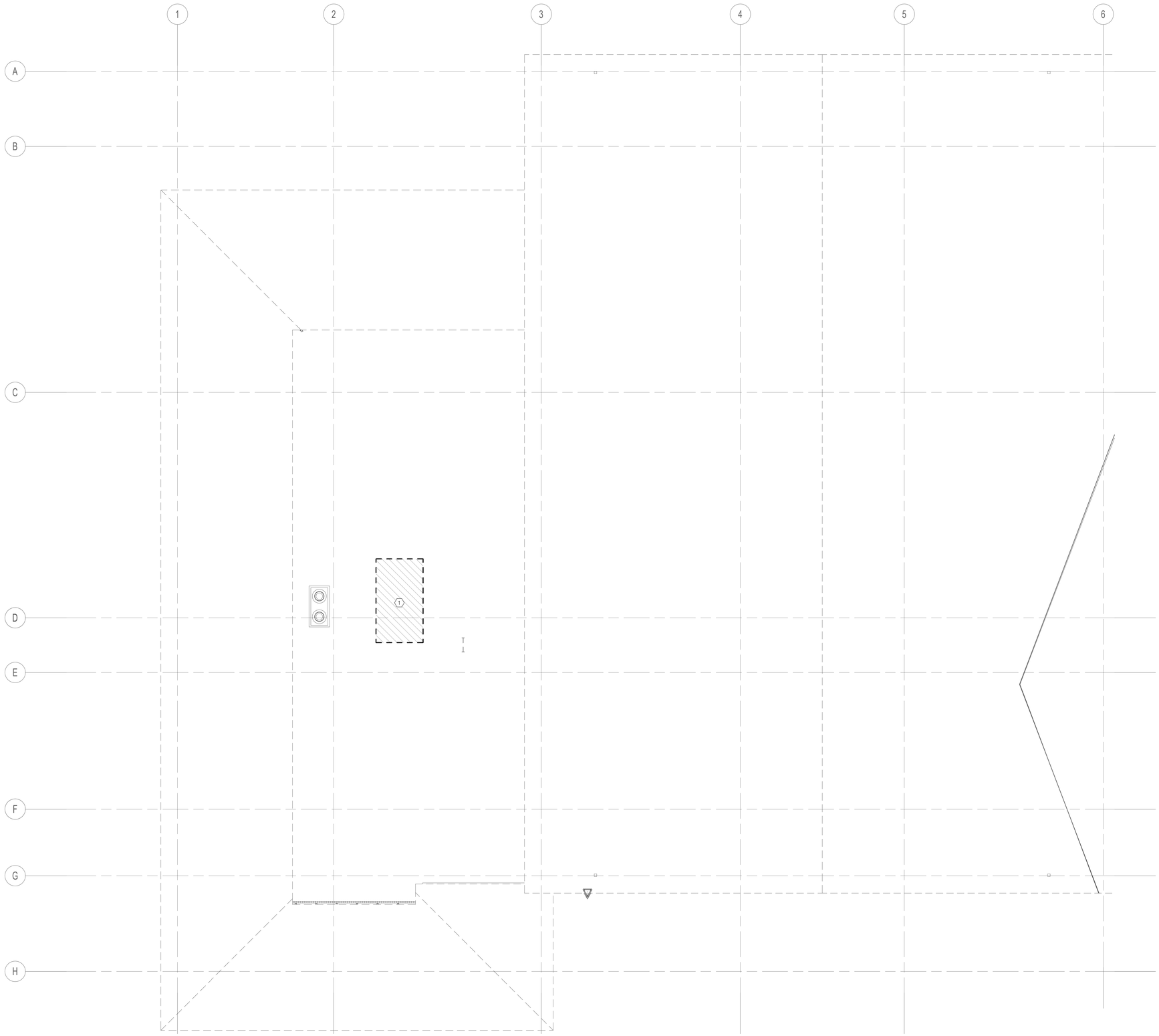

1 ROOF MECHANICAL DEMO PLAN
SCALE: 1/4" = 1'-0"

GENERAL NOTES

1. ALL ITEMS SHOWN LIGHT ARE EXISTING.
2. ALL ITEMS SHOWN DASHED AND HATCHED ARE TO BE DEMOLISHED.
3. ALL ITEMS SHOWN DARK AND SOLID ARE NEW.
4. OFFSET NEW DUCT AS REQUIRED TO COORDINATE WITH OTHER TRADES.
5. DUCTWORK ABOVE GYP. BOARD CEILINGS SHALL BE HARD DUCTED.
6. CONTRACTOR SHALL PROVIDE ALL INCIDENTAL OFFSETS REQUIRED FOR COMPLETE OPERATIONAL MECHANICAL SYSTEMS.
7. A YOUNG TYPE GEAR REGULATOR SHALL BE USED ON ALL DAMPERS LOCATED ABOVE GYP. BOARD CEILINGS.
8. ROOMS WITH WALLS EXTENDING TO ABOVE CEILING TO BOTTOM OF DECK ARE REQUIRED TO HAVE TRANSFER AIR DUCTS AS SHOWN ON DRAWINGS.
9. COORDINATE MOUNTING HEIGHT OF AIR DEVICE GRILLS WITH EXPOSED CEILINGS WITH ARCHITECT AND OWNER.
10. BRANCH SIZE TO MATCH DIFFUSER NECK SIZE UNLESS NOTED OTHERWISE.
11. ALL DUCT TRANSITIONS FROM ROOF EQUIPMENT DROPS TO BE PER MANUFACTURER DRAWING SIZE.
12. DUCT DIMENSIONS SHOWN ARE INSIDE CLEAR DIMENSIONS.
13. EXHAUST GRILLES ARE TYPICALLY BELOW EXHAUST DUCTWORK. PLEASE REFER TO TAGS AND TYP. X NOTES TO AFFIRM HOW MANY GRILLES ARE IN SPACE.
14. ALL ROOFTOP EQUIPMENT TO MAINTAIN A MINIMUM OF 10'-0" FROM EDGE OF ROOF.
15. DUCT DROPS FROM ROOFTOP EQUIPMENT ARE TO MAINTAIN EQUIPMENT OPENING SIZE THROUGH PENETRATION OF BUILDING ENVELOPE. TRANSITION TO SIZES SHOWN ONCE INSIDE BUILDING.

KEYED NOTES

1 REMOVE EXISTING ROOFTOP UNITS LOCATED IN MECHANICAL WELL AND ALL ASSOCIATED DUCTWORK AND AIR DEVICES. ROOFTOP UNITS SHALL NOT BE REUSED. SALVAGE OF EXISTING REGISTERS, DIFFUSERS, AND GRILLES IS PERMITTED ONLY WHERE ITEMS ARE IN GOOD CONDITION AND CLEANED BY CONTRACTOR, SUBJECT TO OWNER APPROVAL.

Babcock Design

Salt Lake City
52 Exchange Place
Salt Lake City, UT 84111
801.531.1144

Boise
800 W Main Street, Suite 940
Boise, ID 83702
208.424.7675

babcock**design**.com

Consultant

COLVIN ENGINEERING ASSOCIATES
505 East South Temple, Ste 100
Salt Lake City, Utah 84102-1004
Phone 801.322.2400
colvinengineering.com

CITY OF ALPINE

ALPINE FIRE STATION

50 E 100 N ALPINE, UT 84004

Revisions

Num.	Description	Date

Project Number	25116
Original Issue	04.16.2026
Project Status	CONSTRUCTION DOCUMENTS

The information and content represented herein is considered by law the architect's instruments of service and are the property of Babcock Design. They are available for limited review and evaluation by clients, consultants, contractors, government agencies, vendors, and office personnel only in accordance with this notice. They are intended for use only for the project specified and are to be used for no other purpose or project including additions to or modification of the completed project. No part thereof may be copied, reproduced, photographed, modified, published, uploaded, transmitted, disclosed, sold, distributed to others in any way including in digital form, or otherwise used without the prior written consent of Babcock Design.

COPYRIGHT © 2025 BABCOCK DESIGN

Stamp

Sheet Title

ROOF MECHANICAL DEMO PLAN

Sheet Number

MD131

Copyright (C) 2025 by Colvin Engineering Associates, Inc. Salt Lake City, Utah. All rights reserved. Unauthorized copying and/or use is illegal and subject to prosecution.

Current as of: 4/16/2026 1:20:09 PM

Original drawing is 30" x 42" Autodesk Docs://25116 - ALPINE FIRE STATION 202/MECH 2025.095.00 Alpine Fire Station 202.v25.rvt

GENERAL NOTES

1. ALL ITEMS SHOWN LIGHT ARE EXISTING.
2. ALL ITEMS SHOWN DASHED AND HATCHED ARE TO BE DEMOLISHED.
3. ALL ITEMS SHOWN DARK AND SOLID ARE NEW.
4. OFFSET NEW DUCT AS REQUIRED TO COORDINATE WITH OTHER TRADES.
5. DUCTWORK ABOVE GYP. BOARD CEILINGS SHALL BE HARD DUCTED.
6. CONTRACTOR SHALL PROVIDE ALL INCIDENTAL OFFSETS REQUIRED FOR COMPLETE OPERATIONAL MECHANICAL SYSTEMS.
7. A YOUNG TYPE GEAR REGULATOR SHALL BE USED ON ALL DAMPERS LOCATED ABOVE GYP. BOARD CEILINGS.
8. ROOMS WITH WALLS EXTENDING TO ABOVE CEILING TO BOTTOM OF DECK ARE REQUIRED TO HAVE TRANSFER AIR DUCTS AS SHOWN ON DRAWINGS.
9. COORDINATE MOUNTING HEIGHT OF AIR DEVICE GRILLS WITH EXPOSED CEILINGS WITH ARCHITECT AND OWNER.
10. BRANCH SIZE TO MATCH DIFFUSER NECK SIZE UNLESS NOTED OTHERWISE.
11. ALL DUCT TRANSITIONS FROM ROOF EQUIPMENT DROPS TO BE PER MANUFACTURER DRAWING SIZE.
12. DUCT DIMENSIONS SHOWN ARE INSIDE CLEAR DIMENSIONS.
13. EXHAUST GRILLES ARE TYPICALLY BELOW EXHAUST DUCTWORK. PLEASE REFER TO TAGS AND TYP. X NOTES TO AFFIRM HOW MANY GRILLES ARE IN SPACE.
14. ALL ROOFTOP EQUIPMENT TO MAINTAIN A MINIMUM OF 10'-0" FROM EDGE OF ROOF.
15. DUCT DROPS FROM ROOFTOP EQUIPMENT ARE TO MAINTAIN EQUIPMENT OPENING SIZE THROUGH PENETRATION OF BUILDING ENVELOPE. TRANSITION TO SIZES SHOWN ONCE INSIDE BUILDING.

KEYED NOTES

1 DESTRATIFICATION FANS TO FIT BETWEEEN JOISTS AND BE MOUNTED IN RAFTER SPACE. EXACT INSTALLATION TO BE COORDINATED ON-SITE.

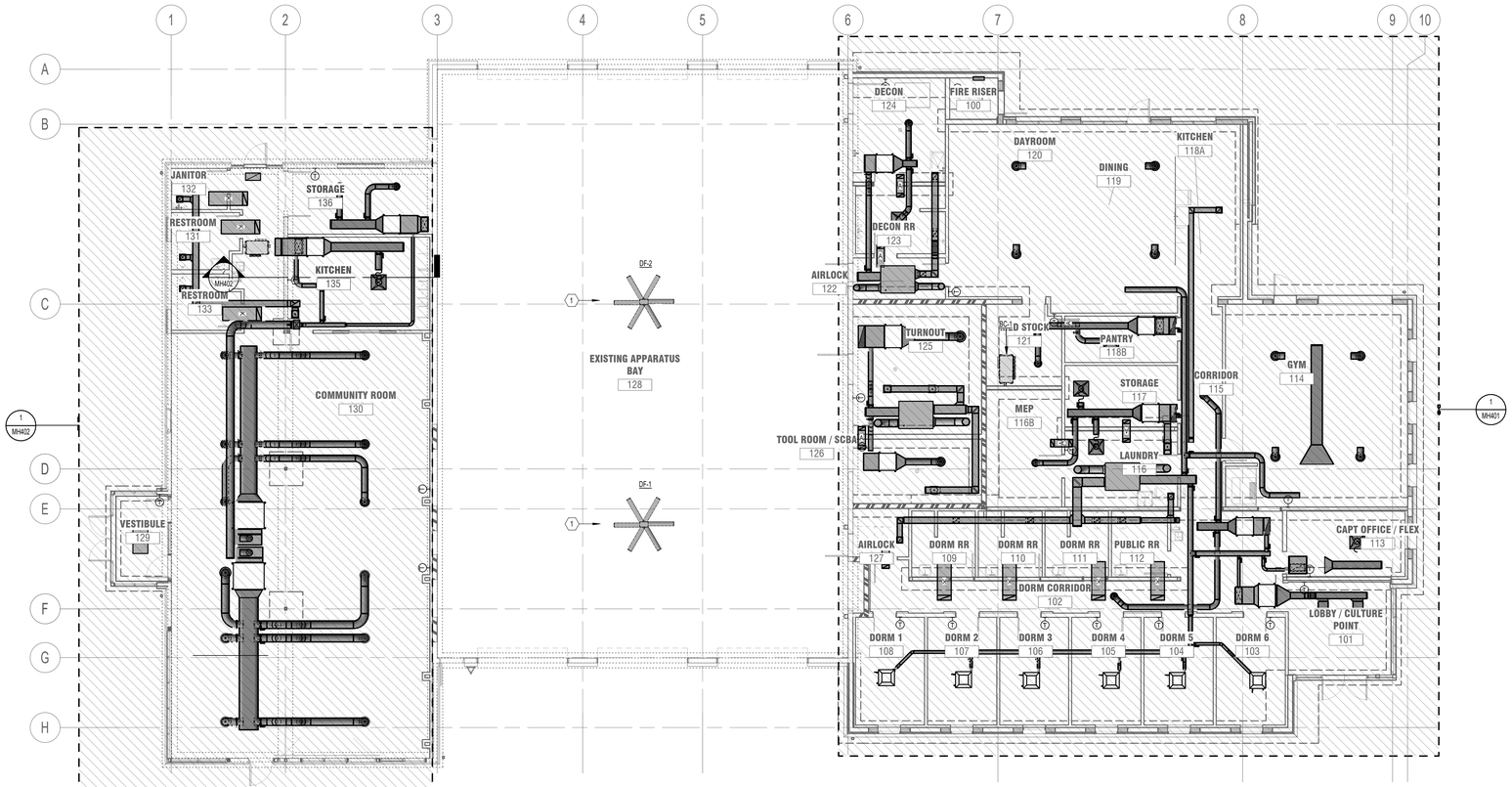

1 LEVEL 1 MECHANICAL PLAN
SCALE: 1/8" = 1'-0"

Babcock Design

Salt Lake City
52 Exchange Place
Salt Lake City, UT 84111
801.531.1144

Boise
800 W Main Street, Suite 940
Boise, ID 83702
208.424.7675

babcockdesign.com

Consultant

COLVIN ENGINEERING ASSOCIATES
505 East South Temple, Ste 100
Salt Lake City, Utah 84102-1004
Phone 801.322.2400
colvinengineering.com

CITY OF ALPINE

ALPINE FIRE STATION

50 E 100 N ALPINE, UT 84004

Revisions

Num.	Description	Date

Project Number	25116
Original Issue	04.16.2026
Project Status	CONSTRUCTION DOCUMENTS

The information and content represented herein is considered by law the architect's instruments of service and are the property of Babcock Design. They are available for limited review and evaluation by clients, consultants, contractors, government agencies, vendors, and office personnel only in accordance with this notice. They are intended for use only for the project specified and are to be used for no other purpose or project including additions to or modification of the completed project. No part thereof may be copied, reproduced, photographed, modified, published, uploaded, transmitted, disclosed, sold, distributed to others in any way including in digital form, or otherwise used without the prior written consent of Babcock Design.

COPYRIGHT © 2025 BABCOCK DESIGN

Stamp

Sheet Title

LEVEL 1 MECHANICAL PLAN

Sheet Number

MH112

Copyright (C) 2025 by Colvin Engineering Associates, Inc. Salt Lake City, Utah. All rights reserved. Unauthorized copying and/or use is illegal and subject to prosecution.

Current as of: 4/16/2026 1:20:12 PM

Original drawing is 30" x 42" Autodesk Docs://25116 - ALPINE FIRE STATION 202/MECH 2025.095.00 Alpine Fire Station 202 V25.rvt

Copyright (C) 2025 by Colvin Engineering Associates, Inc. Salt Lake City, Utah. All rights reserved. Unauthorized copying and/or use is illegal and subject to prosecution.

GENERAL NOTES

1. ALL ITEMS SHOWN LIGHT ARE EXISTING.
2. ALL ITEMS SHOWN DASHED AND HATCHED ARE TO BE DEMOLISHED.
3. ALL ITEMS SHOWN DARK AND SOLID ARE NEW.
4. OFFSET NEW DUCT AS REQUIRED TO COORDINATE WITH OTHER TRADES.
5. DUCTWORK ABOVE GYP. BOARD CEILINGS SHALL BE HARD DUCTED.
6. CONTRACTOR SHALL PROVIDE ALL INCIDENTAL OFFSETS REQUIRED FOR COMPLETE OPERATIONAL MECHANICAL SYSTEMS.
7. A YOUNG TYPE GEAR REGULATOR SHALL BE USED ON ALL DAMPERS LOCATED ABOVE GYP. BOARD CEILINGS.
8. ROOMS WITH WALLS EXTENDING TO ABOVE CEILING TO BOTTOM OF DECK ARE REQUIRED TO HAVE TRANSFER AIR DUCTS AS SHOWN ON DRAWINGS.
9. COORDINATE MOUNTING HEIGHT OF AIR DEVICE GRILLS WITH EXPOSED CEILINGS WITH ARCHITECT AND OWNER.
10. BRANCH SIZE TO MATCH DIFFUSER NECK SIZE UNLESS NOTED OTHERWISE.
11. ALL DUCT TRANSITIONS FROM ROOF EQUIPMENT DROPS TO BE PER MANUFACTURER DRAWING SIZE.
12. DUCT DIMENSIONS SHOWN ARE INSIDE CLEAR DIMENSIONS.
13. EXHAUST GRILLES ARE TYPICALLY BELOW EXHAUST DUCTWORK. PLEASE REFER TO TAGS AND TYP. X NOTES TO AFFIRM HOW MANY GRILLES ARE IN SPACE.
14. ALL ROOFTOP EQUIPMENT TO MAINTAIN A MINIMUM OF 10'-0" FROM EDGE OF ROOF.
15. DUCT DROPS FROM ROOFTOP EQUIPMENT ARE TO MAINTAIN EQUIPMENT OPENING SIZE THROUGH PENETRATION OF BUILDING ENVELOPE. TRANSITION TO SIZES SHOWN ONCE INSIDE BUILDING.

KEYED NOTES

1 EXTEND EXHAUST DUCT UP ABOVE ROOF LINE AND TERMINATE WITH FERGUSON #SEC10CC RAIN CAP.

2 OUTSIDE AIR DUCT TO TERMINATE WITH GOOSENECK AND BIRDSCREEN. VERIFY THAT INTAKE IS INSTALLED AT LEAST 10' AWAY FROM ANY VENT OR EXHAUST OUTLET.

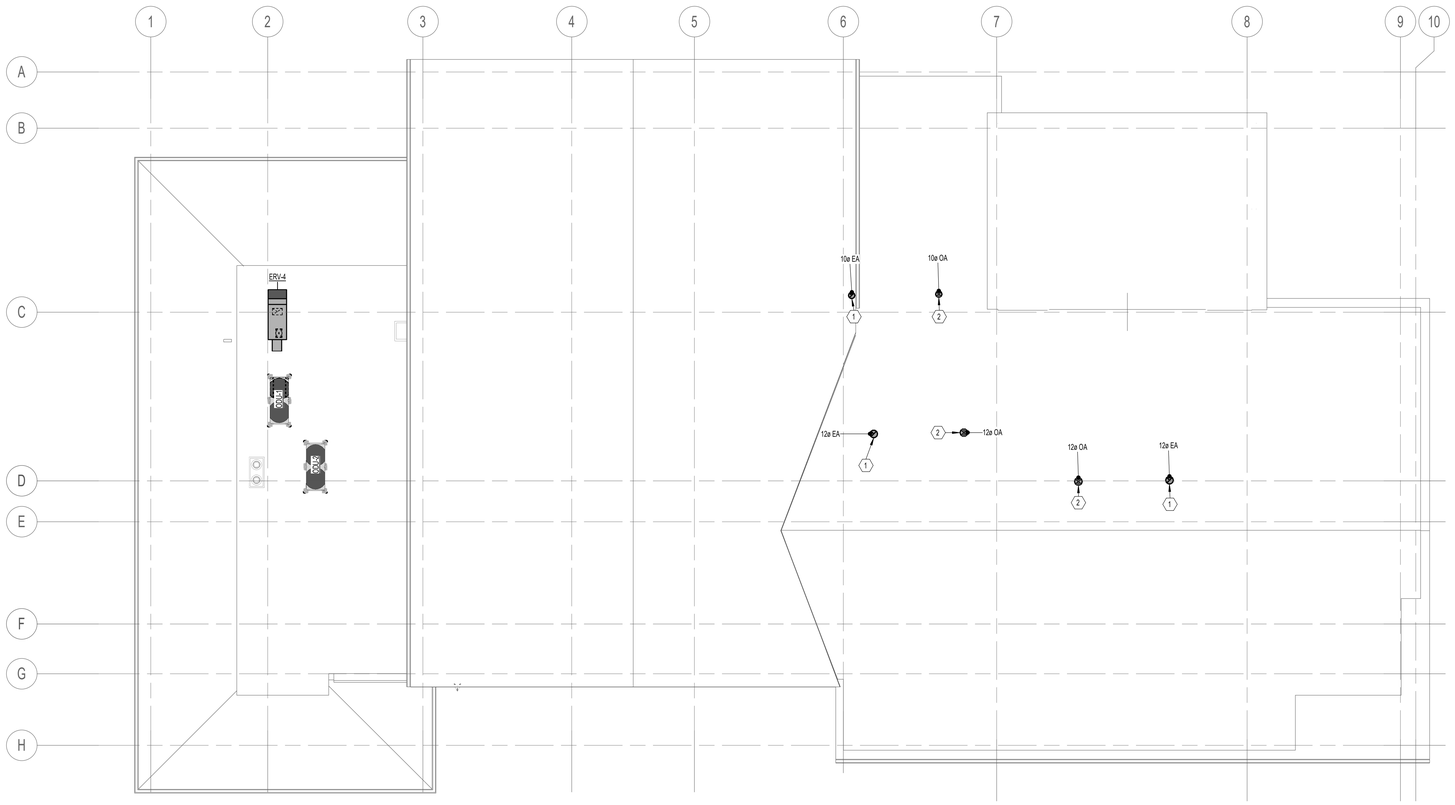

1 ROOF MECHANICAL PLAN

SCALE: 1/8" = 1'-0"

Babcock Design

Salt Lake City
52 Exchange Place
Salt Lake City, UT 84111
801.531.1144

Boise
800 W Main Street, Suite 940
Boise, ID 83702
208.424.7675

babcock**design**.com

Consultant

COLVIN ENGINEERING ASSOCIATES
505 East South Temple, Ste 100
Salt Lake City, Utah 84102-1004
Phone 801.322.2400
colvinengineering.com

CITY OF ALPINE

ALPINE FIRE STATION

50 E 100 N ALPINE, UT 84004

Revisions

Num.	Description	Date

Project Number	25116
Original Issue	04.16.2026
Project Status	CONSTRUCTION DOCUMENTS

The information and content represented herein is considered by law the architect's instruments of service and are the property of Babcock Design. They are available for limited review and evaluation by clients, contractors, and public agencies with regulatory authority over the project described herein and may not be revised without the written consent of Babcock Design. They are intended for use only for the project specified and are to be used for no other purpose on project including additions to or modification of the completed project. No part thereof may be copied, reproduced, photographed, modified, published, uploaded, transmitted, disclosed, sold, distributed to others in any way including in digital form, or otherwise used without the prior written consent of Babcock Design.

COPYRIGHT © 2025 BABCOCK DESIGN

Stamp

Sheet Title

ROOF MECHANICAL PLAN

Sheet Number

MH131

Current as of: 4/16/2026 1:05:14 PM

Original drawing is 30" x 42" Autodesk Docs://25116 - ALPINE FIRE STATION 2026/MECH 2025.095.00 Alpine Fire Station 2021 V25.rvt

Copyright (C) 2025 by Colvin Engineering Associates, Inc. Salt Lake City, Utah. All rights reserved. Unauthorized copying and/or use is illegal and subject to prosecution.

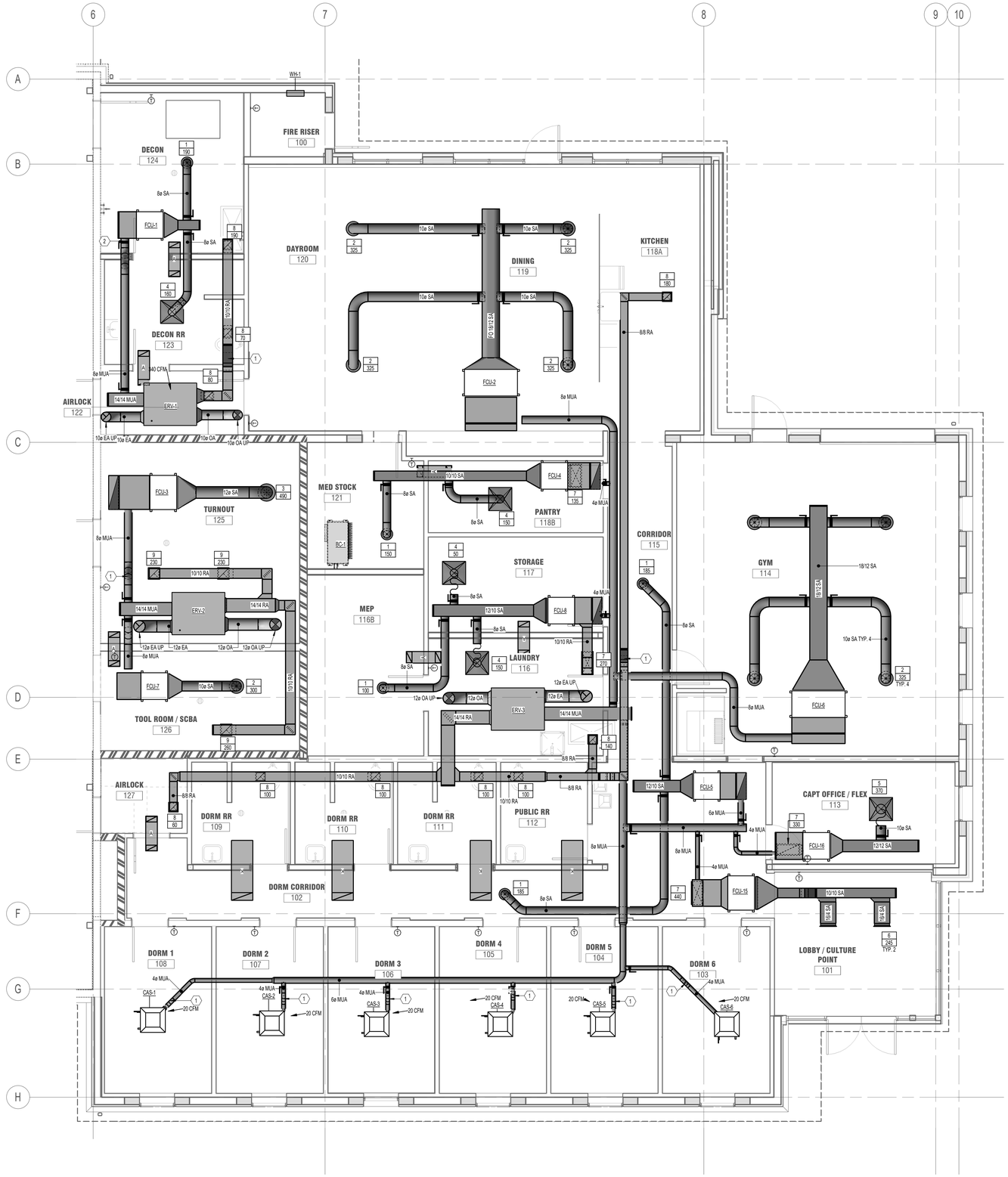

1 ENLARGED MECHANICAL PLAN - NEW ADDITION

SCALE: 1/4" = 1'-0"

GENERAL NOTES

1. ALL ITEMS SHOWN LIGHT ARE EXISTING.
2. ALL ITEMS SHOWN DASHED AND HATCHED ARE TO BE DEMOLISHED.
3. ALL ITEMS SHOWN DARK AND SOLID ARE NEW.
4. OFFSET NEW DUCT AS REQUIRED TO COORDINATE WITH OTHER TRADES.
5. DUCTWORK ABOVE GYP. BOARD CEILINGS SHALL BE HARD DUCTED.
6. CONTRACTOR SHALL PROVIDE ALL INCIDENTAL OFFSETS REQUIRED FOR COMPLETE OPERATIONAL MECHANICAL SYSTEMS.
7. A YOUNG TYPE GEAR REGULATOR SHALL BE USED ON ALL DAMPERS LOCATED ABOVE GYP. BOARD CEILINGS.
8. ROOMS WITH WALLS EXTENDING TO ABOVE CEILING TO BOTTOM OF DECK ARE REQUIRED TO HAVE TRANSFER AIR DUCTS AS SHOWN ON DRAWINGS.
9. COORDINATE MOUNTING HEIGHT OF AIR DEVICE GRILLS WITH EXPOSED CEILINGS WITH ARCHITECT AND OWNER.
10. BRANCH SIZE TO MATCH DIFFUSER NECK SIZE UNLESS NOTED OTHERWISE.
11. ALL DUCT TRANSITIONS FROM ROOF EQUIPMENT DROPS TO BE PER MANUFACTURER DRAWING SIZE.
12. DUCT DIMENSIONS SHOWN ARE INSIDE CLEAR DIMENSIONS.
13. EXHAUST GRILLES ARE TYPICALLY BELOW EXHAUST DUCTWORK. PLEASE REFER TO TAGS AND TYP. X NOTES TO AFFIRM HOW MANY GRILLES ARE IN SPACE.
14. ALL ROOFTOP EQUIPMENT TO MAINTAIN A MINIMUM OF 10'-0" FROM EDGE OF ROOF.
15. DUCT DROPS FROM ROOFTOP EQUIPMENT ARE TO MAINTAIN EQUIPMENT OPENING SIZE THROUGH PENETRATION OF BUILDING ENVELOPE. TRANSITION TO SIZES SHOWN ONCE INSIDE BUILDING.

KEYED NOTES

1 TRANSITION DUCTWORK ABOVE / BELOW ARCHITECTURAL & STRUCTURAL FEATURES. &/OR DUCTWORK, EXACT INSTALL SHALL BE COORDINATED ON-SITE.

2 ROUTE OUTSIDE AIR DUCT TO TAP INTO RETURN OF AC UNIT AS SHOWN. BALANCE DAMPER TO VALUES INDICATED ON MECHANICAL SCHEDULES.

Babcock Design

Salt Lake City
52 Exchange Place
Salt Lake City, UT 84111
801.531.1144

Boise
800 W Main Street, Suite 940
Boise, ID 83702
208.424.7675

babcock**design**.com

Consultant

COLVIN ENGINEERING ASSOCIATES
505 East South Temple, Ste 100
Salt Lake City, Utah 84102-1004
Phone 801.322.2400
colvinengineering.com

CITY OF ALPINE

ALPINE FIRE STATION

50 E 100 N ALPINE, UT 84004

Revisions

Num.	Description	Date

Project Number	25116
Original Issue	04.16.2026
Project Status	CONSTRUCTION DOCUMENTS

The information and content represented herein is considered by law the architect's instruments of service and are the property of Babcock Design. They are available for limited review and evaluation by clients, governmental agencies, and contractors for bidding or construction of the project specified in this notice. They are intended for use only for the project specified and are to be used for no other purpose or project including additions to or modification of the completed project. No part thereof may be copied, reproduced, photographed, modified, published, uploaded, transmitted, disclosed, sold, distributed to others in any way including in digital form, or otherwise used without the prior written consent of Babcock Design.

COPYRIGHT © 2020 BABCOCK DESIGN

Stamp

REGISTERED PROFESSIONAL ENGINEER STATE OF UTAH
STEPHEN D. CONNOR
187524
04/16/2026

Sheet Title

ENLARGED MECHANICAL PLANS

Sheet Number

MH401

Original drawing is 30" x 42" Autodesk Docs://25116 - ALPINE FIRE STATION 202/MECH 2025.09S.00 Alpine Fire Station 202 V25.rvt
Current as of: 4/16/2026 1:20:18 PM

Copyright (C) 2025 by Colvin Engineering Associates, Inc. Salt Lake City, Utah. All rights reserved. Unauthorized copying and/or use is illegal and subject to prosecution.

GENERAL NOTES

1. ALL ITEMS SHOWN LIGHT ARE EXISTING.
2. ALL ITEMS SHOWN DASHED AND HATCHED ARE TO BE DEMOLISHED.
3. ALL ITEMS SHOWN DARK AND SOLID ARE NEW.
4. OFFSET NEW DUCT AS REQUIRED TO COORDINATE WITH OTHER TRADES.
5. DUCTWORK ABOVE GYP. BOARD CEILINGS SHALL BE HARD DUCTED.
6. CONTRACTOR SHALL PROVIDE ALL INCIDENTAL OFFSETS REQUIRED FOR COMPLETE OPERATIONAL MECHANICAL SYSTEMS.
7. A YOUNG TYPE GEAR REGULATOR SHALL BE USED ON ALL DAMPERS LOCATED ABOVE GYP. BOARD CEILINGS.
8. ROOMS WITH WALLS EXTENDING TO ABOVE CEILING TO BOTTOM OF DECK ARE REQUIRED TO HAVE TRANSFER AIR DUCTS AS SHOWN ON DRAWINGS.
9. COORDINATE MOUNTING HEIGHT OF AIR DEVICE GRILLS WITH EXPOSED CEILINGS WITH ARCHITECT AND OWNER.
10. BRANCH SIZE TO MATCH DIFFUSER NECK SIZE UNLESS NOTED OTHERWISE.
11. ALL DUCT TRANSITIONS FROM ROOF EQUIPMENT DROPS TO BE PER MANUFACTURER DRAWING SIZE.
12. DUCT DIMENSIONS SHOWN ARE INSIDE CLEAR DIMENSIONS.
13. EXHAUST GRILLES ARE TYPICALLY BELOW EXHAUST DUCTWORK. PLEASE REFER TO TAGS AND TYP. X NOTES TO AFFIRM HOW MANY GRILLES ARE IN SPACE.
14. ALL ROOFTOP EQUIPMENT TO MAINTAIN A MINIMUM OF 10'-0" FROM EDGE OF ROOF.
15. DUCT DROPS FROM ROOFTOP EQUIPMENT ARE TO MAINTAIN EQUIPMENT OPENING SIZE THROUGH PENETRATION OF BUILDING ENVELOPE. TRANSITION TO SIZES SHOWN ONCE INSIDE BUILDING.

KEYED NOTES

1 DUCTWORK TO BE ROUTED THROUGH/IN BETWEEN JOISTS.
2 TRANSITION DUCTWORK ABOVE / BELOW ARCHITECTURAL & STRUCTURAL FEATURES, &/OR DUCTWORK. EXACT INSTALL SHALL BE COORDINATED ON-SITE.

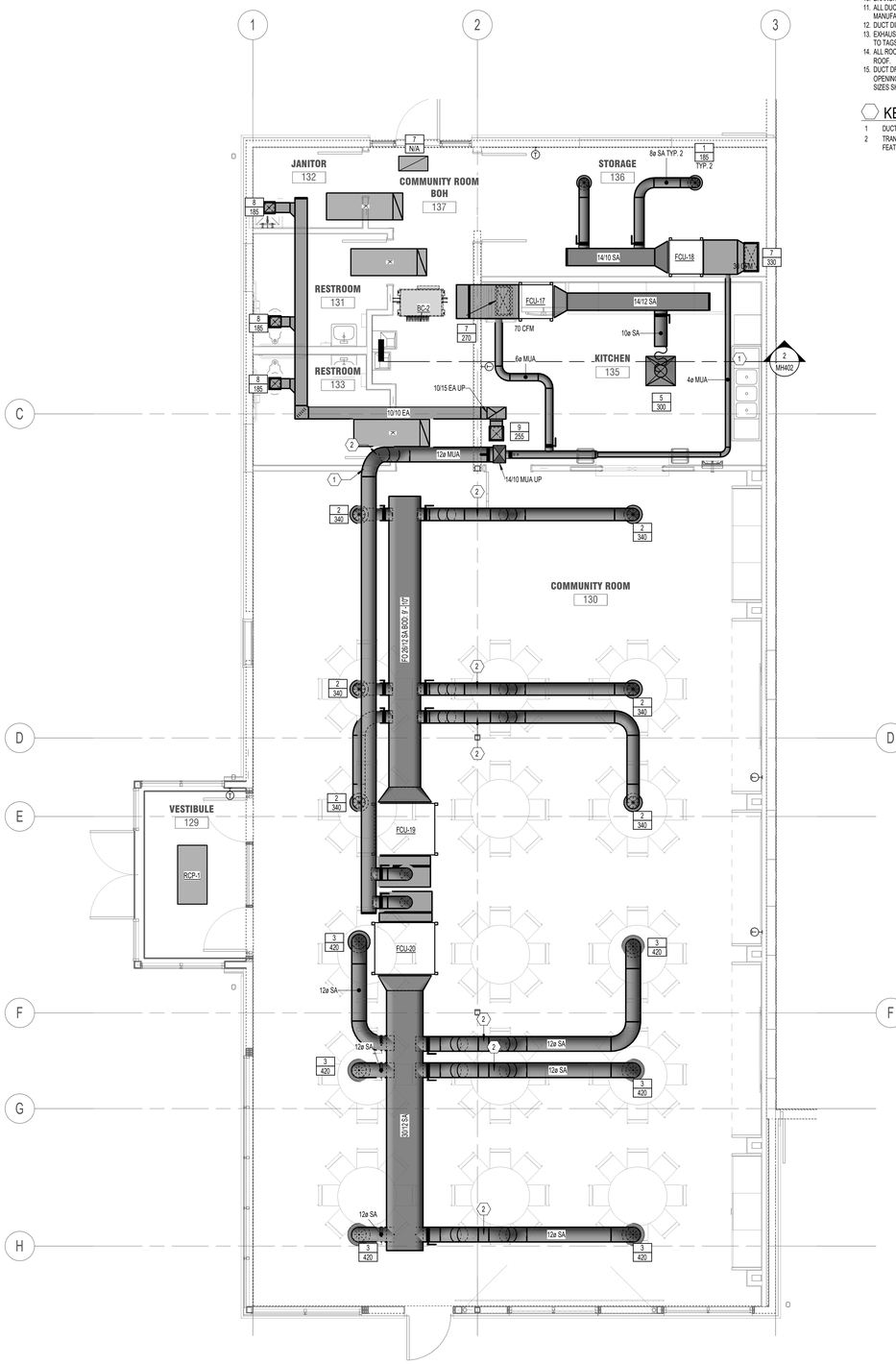

1 ENLARGED MECHANICAL PLAN - REMODEL AREA
SCALE: 1/4" = 1'-0"

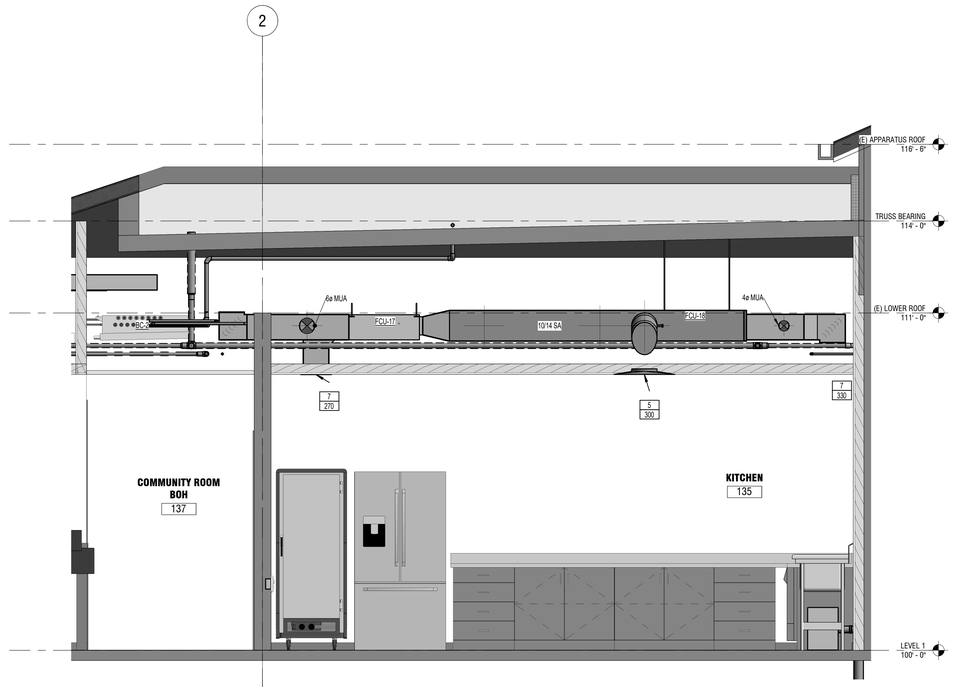

2 STORAGE / RADIO SECTION
SCALE: 1/2" = 1'-0"

Babcock Design

Salt Lake City
52 Exchange Place
Salt Lake City, UT 84111
801.531.1144

Boise
800 W Main Street, Suite 940
Boise, ID 83702
208.424.7675

babcockdesign.com

Consultant

COLVIN ENGINEERING ASSOCIATES
505 East South Temple, Ste 100
Salt Lake City, Utah 84102-1004
Phone 801.322.2400
colvinengineering.com

CITY OF ALPINE

ALPINE FIRE STATION

50 E 100 N ALPINE, UT 84004

Revisions

Num.	Description	Date

Project Number	25116
Original Issue	04.16.2026
Project Status	CONSTRUCTION DOCUMENTS

The information and content represented herein is considered by law the architect's instruments of service and are the property of Babcock Design. They are available for limited review and evaluation by clients, consultants, contractors, government agencies, vendors, and office personnel only in accordance with this notice. They shall not be changed or copied in any form or manner whatsoever nor are they to be assigned to any project including additions to or modification of the completed projects. No part thereof may be copied, reproduced, photographed, modified, published, uploaded, transmitted, disclosed, sold, distributed to others in any way including in digital form, or otherwise used without the prior written consent of Babcock Design.

COPYRIGHT © 2025 BABCOCK DESIGN

Stamp

STEPHEN D. CONNOR
167524
04/16/2026
LICENSED PROFESSIONAL ENGINEER
STATE OF UTAH

Sheet Title

ENLARGED MECHANICAL PLANS

Sheet Number

MH402

Current as of: 4/16/2026 1:25:19 PM
Original drawing is 30" x 42" Autodesk Docs://25116 - ALPINE FIRE STATION 202/MECH 2025.095.00 Alpine Fire Station 202 V25.rvt

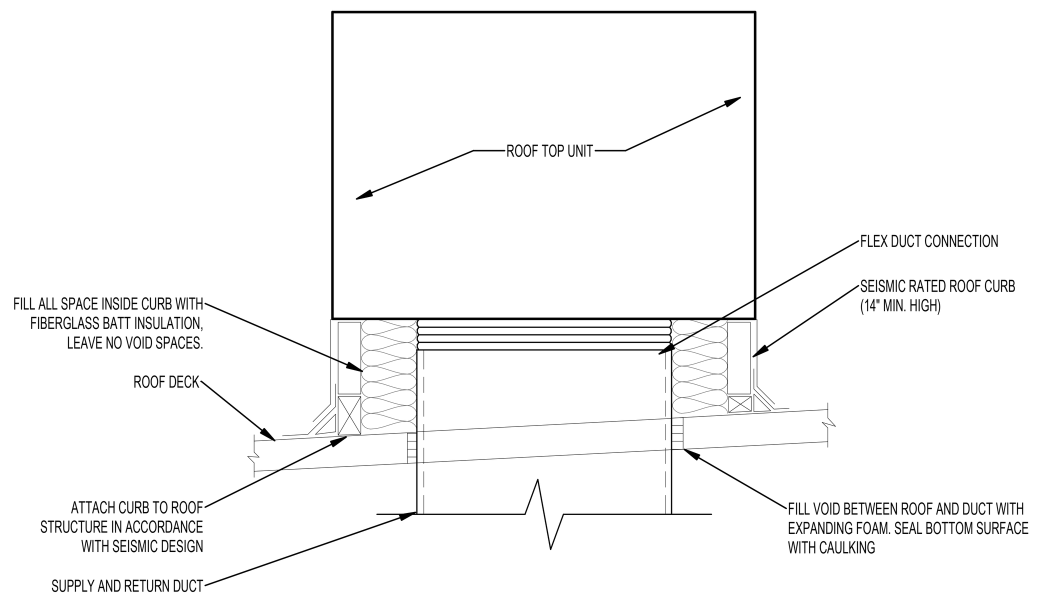

1 ROOF TOP UNIT CURB

SCALE: NONE

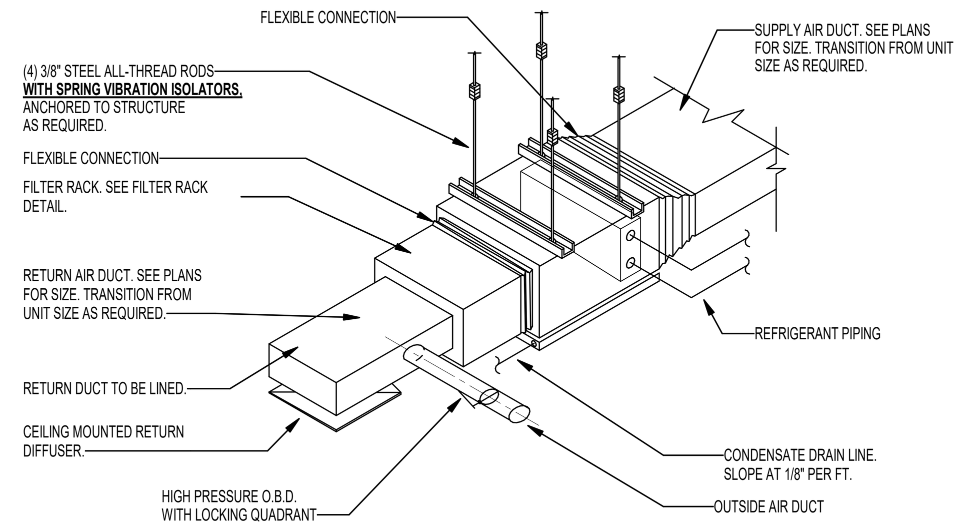

2 VRF FAN COIL UNIT WITH FILTER

SCALE: NONE

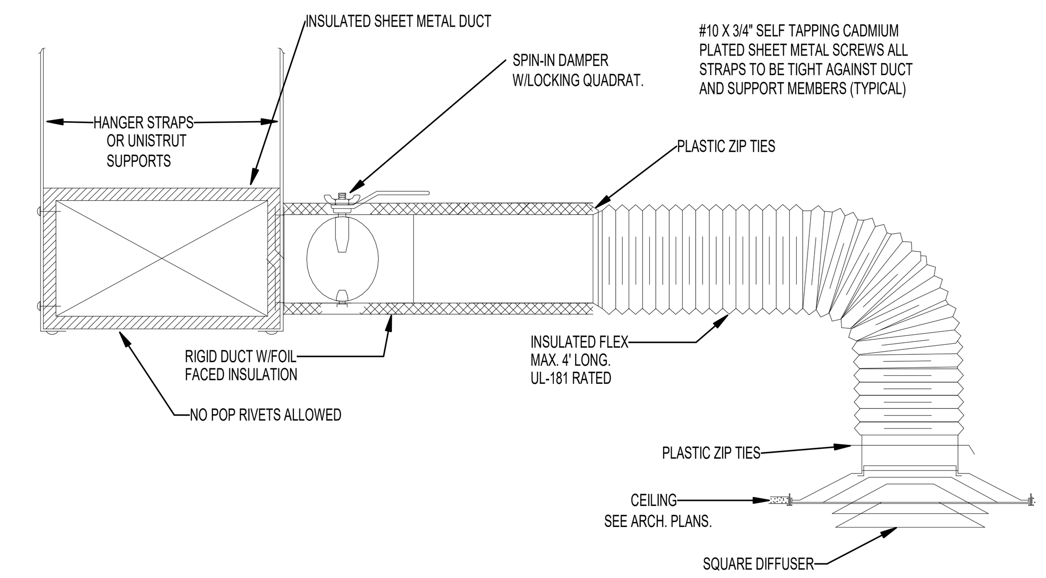

3 DIFFUSER MOUNTING DETAIL (SQUARE)

SCALE: NONE

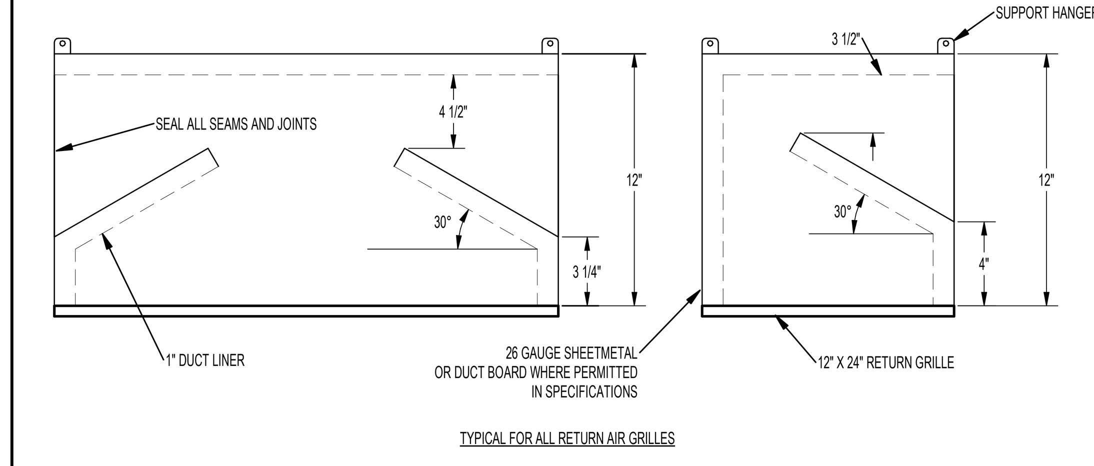

4 AIR DEVICE - RETURN AIR SOUND BOOT

SCALE: NONE

SIZE	OPENING (INXIN)	W (IN)	H (IN)	MAX. TRANSFER (CFM)	APPROX. ΔP (IN WC)
A	12 X 6	12	6	250	0.05
B	12 X 12	12	6	360	0.05
C	24 X 6	24	6	520	0.05
D	24 X 12	24	6	740	0.05
E	24 X 12	24	12	1,000	0.05
F	24 X 24	24	12	1500	0.05
G	36 X 24	36	12	2500	0.05

H AND W ARE CLEAR INSIDE DIMENSIONS

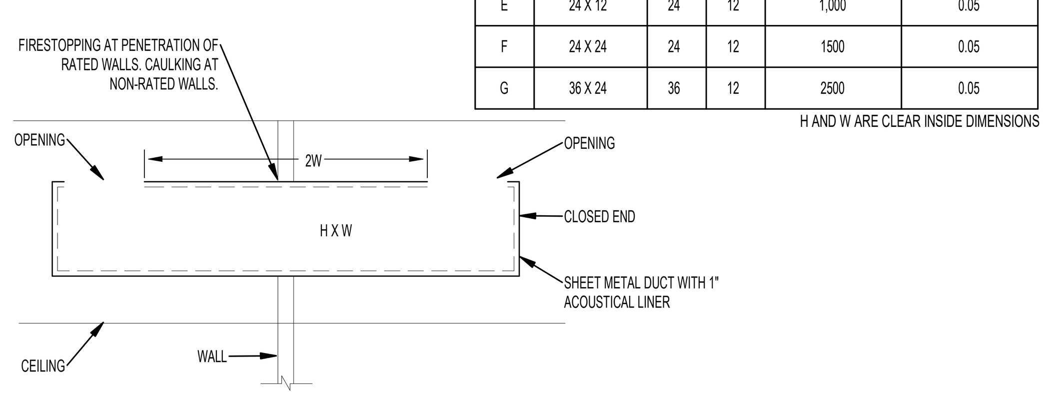

5 DUCT - TRANSFER AIR (PLENUM-PLENUM)

SCALE: NONE

SIZE	OPENING (INXIN)	W (IN)	H (IN)	GRILLE NECK (INXIN)	MAX. TRANSFER (CFM)	APPROX. ΔP (INWC)	AIR DEVICE (REFER TO SCHEDULE)
K	22 X 8	22	6	22 X 10	400	0.05	#10
L	22 X 16	22	12	22 X 22	800	0.05	#9

H AND W ARE CLEAR INSIDE DIMENSIONS

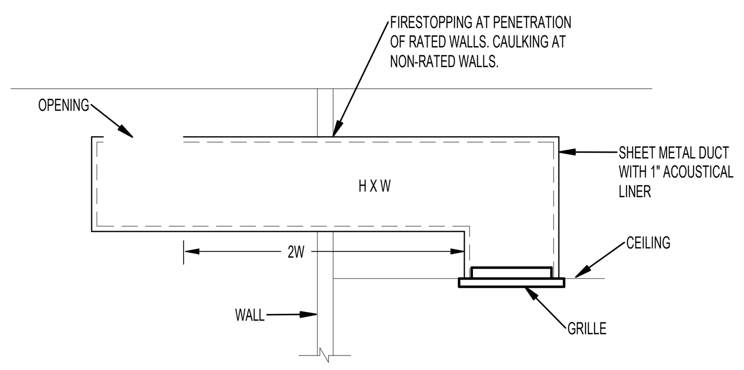

6 DUCT - TRANSFER AIR (CEILING GRILLE-ROOM)

SCALE: NONE

- ALL ISOLATION VALVE CONNECTIONS MUST BE BRAZED.
- NO FLARE FITTINGS WILL BE ACCEPTED.
- ADD CONDENSATE PUMP IF PROPER SLOPE CAN NOT BE MAINTAINED TO DRAIN.

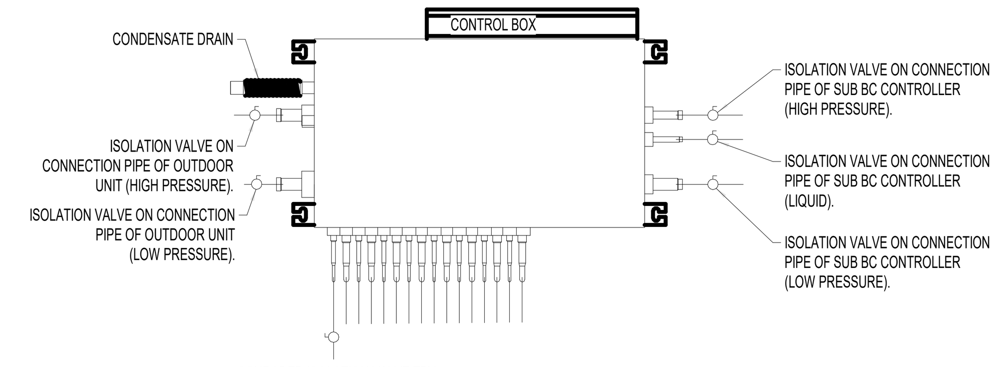

SCHRADER ISOLATION VALVE TPY.
THE SCHRADER VALVES ON BRANCH CONTROLLER ARE ORIENTED AS FOLLOWS FOR ACCESSIBILITY: BOTTOM PORTS MUST BE FACING DOWN, TOP PORTS MUST BE FACING UP AND THE LEFT PORTS MUST BE FACING LEFT.

7 REFRIGERANT MANAGEMENT UNIT DETAIL

SCALE: NONE

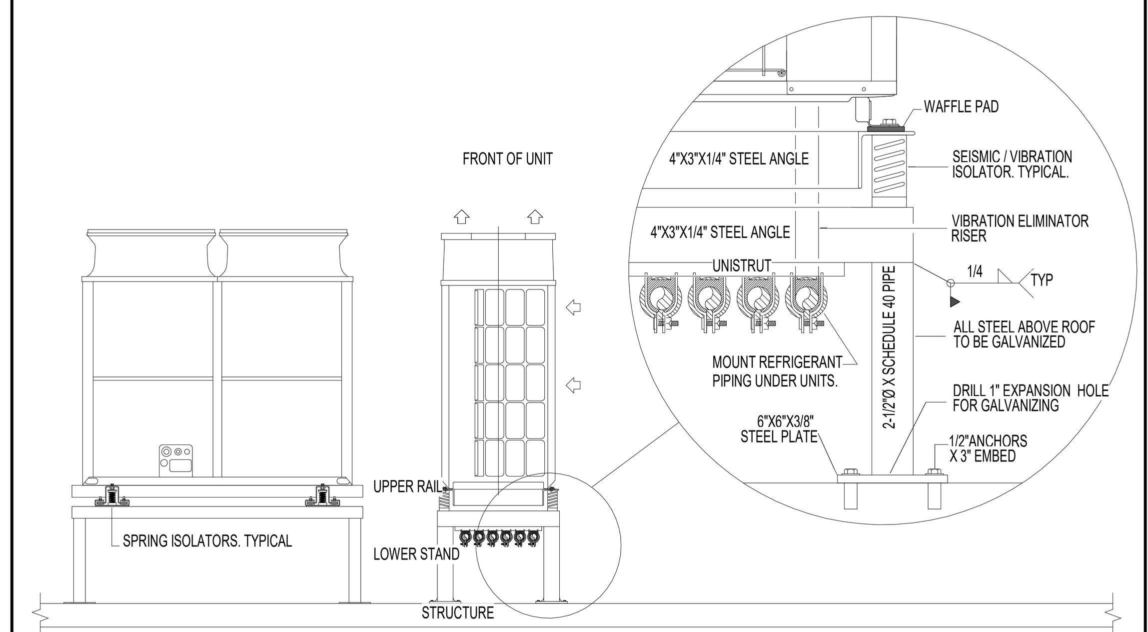

8 MITSUBISHI - SPRING ISOLATED STAND DETAIL - SINGLE

SCALE: NONE

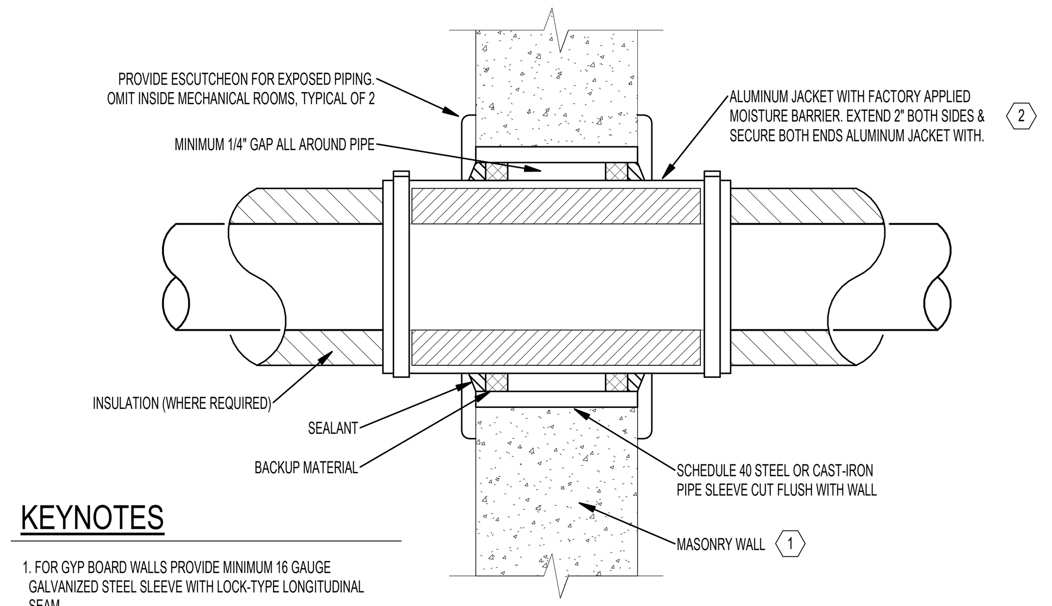

KEYNOTES

1. FOR GYP BOARD WALLS PROVIDE MINIMUM 16 GAUGE GALVANIZED STEEL SLEEVE WITH LOCK-TYPE LONGITUDINAL SEAM

2. OMIT ALUMINUM JACKET IF PIPING IS UNINSULATED

9 PIPE - INSULATION THROUGH FIRE RATED WALL

SCALE: NONE

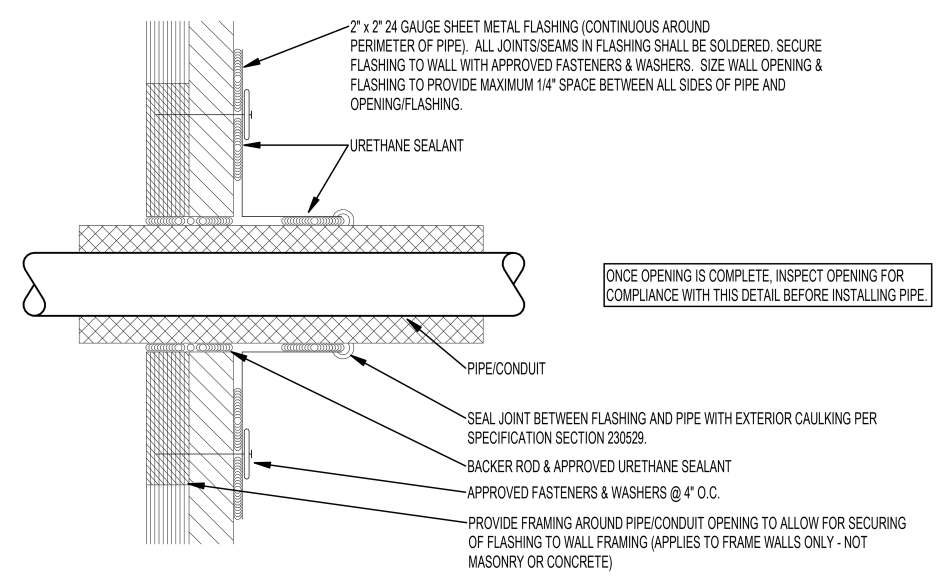

10 PIPE SLEEVE FOR INSULATED PIPE THRU EXTERIOR WALL

SCALE: NONE

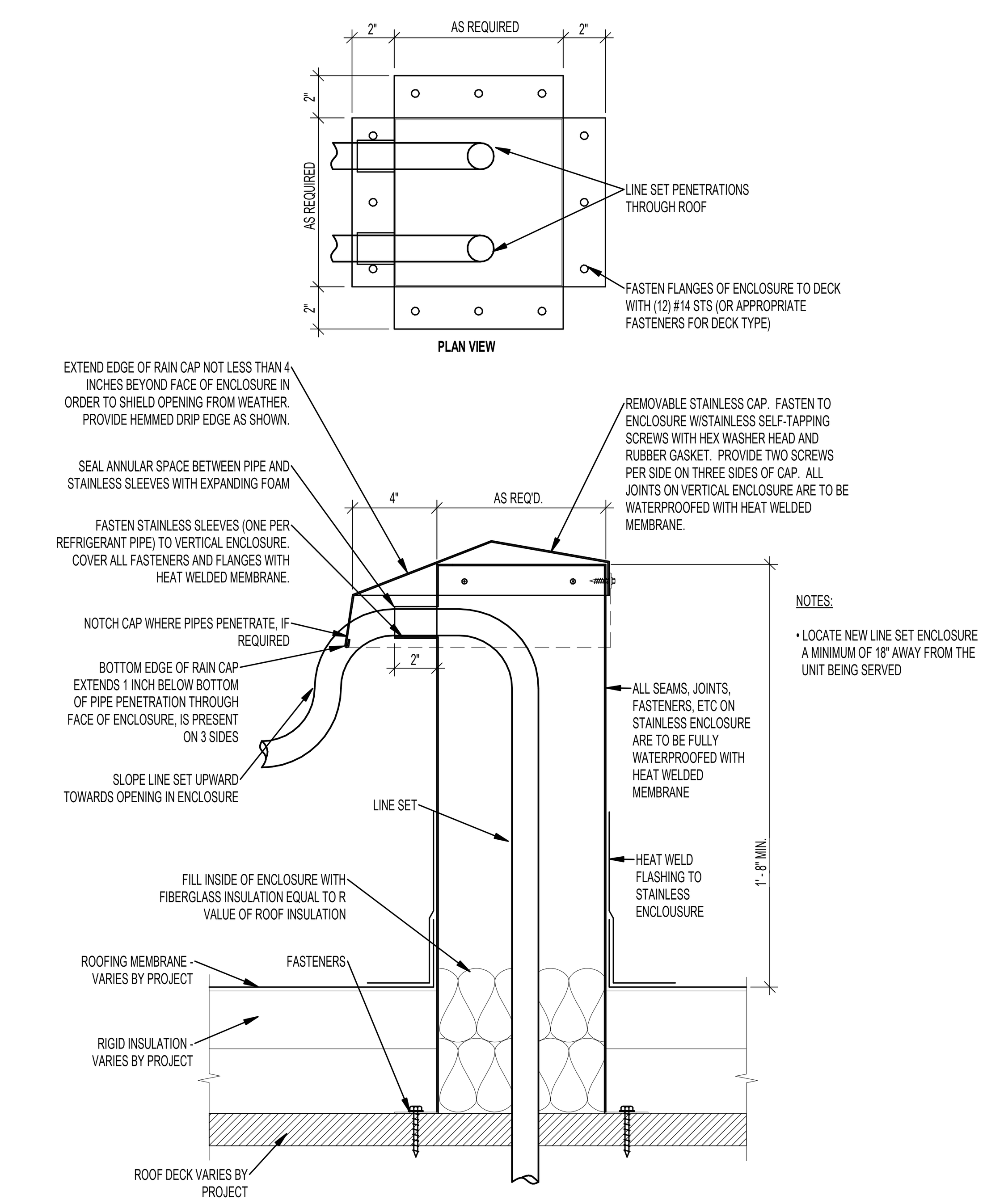

NOTES:

- LOCATE NEW LINE SET ENCLOSURE A MINIMUM OF 18" AWAY FROM THE UNIT BEING SERVED

11 LINE SET ENCLOSURE

SCALE: NONE

Babcock Design

Salt Lake City
52 Exchange Place
Salt Lake City, UT 84111
801.531.1144

Boise
800 W Main Street, Suite 940
Boise, ID 83702
208.424.7675

babcockdesign.com

Consultant

COLVIN ENGINEERING ASSOCIATES
505 East South Temple, Ste 100
Salt Lake City, Utah 84102-1004
Phone 801.322.2400
colvinengineering.com

CITY OF ALPINE

ALPINE FIRE STATION

50 E 100 N ALPINE, UT 84004

Revisions

Num.	Description	Date

Project Number	25116
Original Issue	04.16.2026
Project Status	CONSTRUCTION DOCUMENTS

The information and content represented herein is considered by law the architect's instruments of service and are the property of Babcock Design. They are available for limited review and evaluation by clients, consultants, contractors, government agencies, vendors, and office personnel only in accordance with this notice. They are intended for use only for the project specified and are to be used for no other purpose or project including additions to or modification of the completed project. No part thereof may be copied, reproduced, photographed, modified, published, uploaded, transmitted, disclosed, sold, distributed to others in any way including in digital form, or otherwise used without the prior written consent of Babcock Design.

COPYRIGHT © 2025 BABCOCK DESIGN

Stamp

LICENSED PROFESSIONAL ENGINEER STEPHEN G. CONNOR 187524 04/16/2026 STATE OF UTAH

Sheet Title

MECHANICAL DETAILS

Sheet Number

MH501

Copyright (C) 2025 by Colvin Engineering Associates, Inc. Salt Lake City, Utah. All rights reserved. Unauthorized copying and/or use is illegal and subject to prosecution.

Current as of: 4/16/2026 1:20:19 PM

Original drawing is 30" x 42" Autodesk Docs://25116 - ALPINE FIRE STATION 202/MECH.2025.095.00.Alpine Fire Station 202.V25.rvt

ENERGY RECOVERY UNIT (ERV)

PLAN CODE	LOCATION	UNIT AIRFLOW AND STATIC PRESSURE: OA / SA AIRFLOW (CFM)	OA / SA ESP (IN-WC)	EA / RF AIRFLOW (CFM)	EA / RF ESP (IN-WC)	ERV FAN SYSTEMS: EXHAUST FAN QTY	EXHAUST FAN BHP	EXHAUST FAN MOTOR HP	SUPPLY FAN QTY	SUPPLY FAN BHP	SUPPLY FAN MOTOR HP
ERV-1	PLENUM	340	0.5	810	0.5	1	0.11	1/2	1	0.12	1/2
ERV-2	PLENUM	790	0.5	790	0.5	1	0.45	1/2	1	0.32	1/2
ERV-3	PLENUM	780	0.5	780	0.5	1	0.43	1/2	1	0.32	1/2
ERV-4	ROOF	810	0.25	810	0.25	1	0.39	1/2	1	0.28	1/2

PLAN CODE	ENERGY RECOVERY PERFORMANCE: HX TYPE	OUTDOOR AIR SUMMER / WINTER (DB - °F)	OUTDOOR AIR SUMMER / WINTER (WB - °F)	SUPPLY AIR SUMMER / WINTER (DB - °F)	SUPPLY AIR SUMMER / WINTER (WB - °F)	RETURN AIR SUMMER / WINTER (DB - °F)	RETURN AIR SUMMER / WINTER (WB - °F)	EXHAUST AIR SUMMER / WINTER (DB - °F)	EXHAUST AIR SUMMER / WINTER (WB - °F)
ERV-1	ENTHALPY CORE	98.3 / 9.3	62.6 / 6.8	81.3 / 51.3	60.5 / 41.2	75.0 / 72.0	61.9 / 54.9	92.0 / 29.7	64.1 / 28.1
ERV-2	ENTHALPY CORE	98.3 / 9.3	62.6 / 6.8	83.3 / 46.8	60.6 / 38.3	75.0 / 72.0	61.9 / 54.9	90.1 / 34.3	64.1 / 31.5
ERV-3	ENTHALPY CORE	98.3 / 9.3	62.6 / 6.8	83.3 / 46.8	60.6 / 38.3	75.0 / 72.0	61.9 / 54.9	90.1 / 34.3	64.1 / 31.5
ERV-4	ENTHALPY CORE	98.3 / 9.3	62.6 / 6.8	83.4 / 46.6	60.5 / 38.2	75.0 / 72.0	61.9 / 54.9	90.0 / 34.5	64.1 / 31.7

PLAN CODE	ELECTRICAL (SINGLE POINT CONNECTION): POWER	FLA / MCA	MOP	DISCONNECT	BOD DIMENSIONS: L x W x H (IN)	WEIGHT (LBS)	MANUFACTURER / MODEL NO.
ERV-1	115V / 1Φ	- / 14.4	20.0	DIV 26	54.8 x 28.9 x 43.9	377	VALENT ERC-E1-L-F
ERV-2	115V / 1Φ	- / 14.4	20.0	DIV 26	54.8 x 28.9 x 43.9	377	VALENT ERC-E1-L-F
ERV-3	115V / 1Φ	- / 14.4	20.0	DIV 26	54.8 x 28.9 x 43.9	377	VALENT ERC-E1-L-F
ERV-4	208V / 1Φ	- / 22.1	25.0	DIV 26	95.3 x 28.9 x 43.9	516	VALENT ERC-E1-L-F

REMARKS
1. PROVIDE FACTORY DISCONNECT AND CONVENIENCE OUTLET
2. PROVIDE A 3-PHASE FAILURE MONITOR FOR EQUIPMENT
3. DISCONNECT BY DIV 26, SINGLE POINT POWER CONNECTION
4. PROVIDE FACTORY INSTALLED VFD FOR SUPPLY AIR FAN, EXHAUST AIR FAN AND ERV WHEEL
5. PROVIDE FACTORY INSTALLED DISCHARGE AIR TEMPERATURE CONTROL, SUPPLY FAN 0-10 VDC INPUT CONTROL, AND EXHAUST FAN STATIC PRESSURE CONTROLS WITH BACNET COMMUNICATION CARD
6. PROVIDE 18" INSULATED CURB
7. PROVIDE 2" MERV-8 SUPPLY AND RETURN AIR FILTERS
8. PROVIDE SEISMIC BRACE SPRING VIBRATION ISOLATORS
9. PROVIDE WITH MOTORIZED DAMPERS FOR INTAKE AND EXHAUST AIR STREAMS

VRF OUTDOOR CONDENSING UNIT (ODU)

PLAN CODE	INDOOR UNITS	NOMINAL COOLING CAPACITY (MBH)	ADJUSTED COOING CAPACITY (MBH)	SEER / COP	NOMINAL HEATING CAPACITY (MBH)	ADJUSTED HEATING CAPACITY (MBH)	REFRIGERANT TYPE	STAGES	ELECTRICAL: POWER	MCA	MOCP	DIMENSIONS (NOTE 3): L x W x H (IN)	WEIGHT (LBS)	MANUFACTURER / MODEL NO.
ODU-1	FCU-1 - FCU-17	192.0	188.9	12.95 / 4.31	215.0	210.0	R410A	1	208V / 3Φ	66.0	110	37 x 30 x 72	662	MITSUBISHI / PURY-HP192YSNU-A1
ODU-2	FCU-18 – FCU-20	144.0	148.8	12.1 / 4.22	160.0	157.9	R410A	1	208V / 3Φ	54.0	90	49 x 30 x 72	609	MITSUBISHI / PURY-HP144YSNU-A1

REMARKS
1. DESIGN AMBIENT TEMPERATURES: SUMMER → 97°F DB / 62°F WB | WINTER → 5°F DB
2. EACH ODU MODULE REQUIRES SEPARATE ELECTRICAL CONNECTION; DISCONNECT BY DIV 26
3. PROVIDE AE-200A MASTER CONTROLLER WITH BACNET COMPATIBILITY
4. COP IS BASED ON 47°F AMBIENT CONDITION

VRF DUCTED FAN COIL UNIT (FCU)

PLAN CODE	CONNECTED ODU	LOCATION	SUPPLY AIR FLOW (CFM)	OA AIR FLOW (CFM)	COOLING: NOMINAL CAPACITY (BTUH)	ADJUSTED TOTAL CAPACITY (BTUH)	ADJUSTED SENSIBLE CAPACITY (BTUH)	EAT DB / WB (°F)	LAT DB (°F)	HEATING: NOMINAL (BTUH)	EAT DB (°F)	LAT DB (°F)	SOUND (dBA)	ELECTRICAL: POWER	MCA	DIMENSIONS: L x W x H (IN)	WEIGHT (LBS)	MANUFACTURER / MODEL NO.
FCU-1	ODU-1	DECON 124	370	340	12,000	10,280	7,660	80 / 67	60	13,500	70	99	≤ 45	208V / 1Φ	1.75	28 x 29 x 10	47	MITSUBISHI / PEFY-P12NMAU-E4
FCU-2	ODU-1	DAYROOM 120	1306	260	48,000	41,118	30.791	80 / 67	56	54,000	70	105	≤ 45	208V / 1Φ	4.38	55 x 29 x 10	86	MITSUBISHI / PEFY-P48MNAU-E4
FCU-3	ODU-1	TURNOUT 125	494	440	15,000	12,850	10,530	80 / 67	58	17,000	70	99	≤ 45	208V / 1Φ	2.88	36 x 29 x 10	58	MITSUBISHI / PEFY-P15NMAU-E4
FCU-4	ODU-1	MED STOCK 121	300	40	6,000	5,140	5,140	80 / 67	63	6,700	70	89	≤ 45	208V / 1Φ	1.75	28 x 29 x 10	47	MITSUBISHI / PEFY-P06NMAU-E4
FCU-5	ODU-1	CORRIDOR 115	370	50	12,000	10,280	7,660	80 / 67	60	13,500	70	99	≤ 45	208V / 1Φ	1.75	28 x 29 x 10	47	MITSUBISHI / PEFY-P12NMAU-E4
FCU-6	ODU-1	GYM 114	1306	180	48,000	41,118	30.791	80 / 67	56	54,000	70	105	≤ 45	208V / 1Φ	4.38	55 x 29 x 10	86	MITSUBISHI / PEFY-P48MNAU-E4
FCU-7	ODU-1	TOOL ROOM 126	300	260	6,000	5,140	5,140	80 / 67	63	6,700	70	89	≤ 45	208V / 1Φ	1.75	28 x 29 x 10	47	MITSUBISHI / PEFY-P06NMAU-E4
FCU-8	ODU-1	LAUNDRY 116	300	80	6,000	5,140	5,140	80 / 67	63	6,700	70	89	≤ 45	208V / 1Φ	1.75	28 x 29 x 10	47	MITSUBISHI / PEFY-P06NMAU-E4
CAS-1	ODU-1	DORM 1 108	390	20	12,000	10,280	7,905	80 / 67	60	13,500	70	99	≤ 45	208V / 1Φ	0.35	23 x 23 x 9	37	MITSUBISHI / PLFY-P12NCMU-ER4
CAS-2	ODU-1	DORM 2 107	280	20	5,000	4,280	4,120	80 / 67	65	5,600	70	87	≤ 45	208V / 1Φ	0.24	23 x 23 x 9	29	MITSUBISHI / PLFY-P05NFMU-E
CAS-3	ODU-1	DORM 3 106	280	20	5,000	4,280	4,120	80 / 67	65	5,600	70	87	≤ 45	208V / 1Φ	0.24	23 x 23 x 9	29	MITSUBISHI / PLFY-P05NFMU-E
CAS-4	ODU-1	DORM 4 105	280	20	5,000	4,280	4,120	80 / 67	65	5,600	70	87	≤ 45	208V / 1Φ	0.24	23 x 23 x 9	29	MITSUBISHI / PLFY-P05NFMU-E
CAS-5	ODU-1	DORM 5 104	280	20	5,000	4,280	4,120	80 / 67	65	5,600	70	87	≤ 45	208V / 1Φ	0.24	23 x 23 x 9	29	MITSUBISHI / PLFY-P05NFMU-E
CAS-6	ODU-1	DORM 6 103	280	20	5,000	4,280	4,120	80 / 67	65	5,600	70	87	≤ 45	208V / 1Φ	0.24	23 x 23 x 9	29	MITSUBISHI / PLFY-P05NFMU-E
FCU-15	ODU-1	LOBBY 101	494	20	15,000	12,850	10,530	80 / 67	58	17,000	70	99	≤ 45	208V / 1Φ	2.88	36 x 29 x 10	58	MITSUBISHI / PEFY-P15NMAU-E4
FCU-16	ODU-1	CAPT OFFICE 113	370	20	12,000	10,280	7,660	80 / 67	60	13,500	70	99	≤ 45	208V / 1Φ	1.75	28 x 29 x 10	47	MITSUBISHI / PEFY-P12NMAU-E4
FCU-17	ODU-2	KITCHEN 135	300	100	6,000	5,140	5,140	80 / 67	63	6,700	70	89	≤ 45	208V / 1Φ	1.75	28 x 29 x 10	47	MITSUBISHI / PEFY-P06NMAU-E4
FCU-18	ODU-2	STORAGE 136	370	50	12,000	10,280	7,660	80 / 67	60	13,500	70	99	≤ 45	208V / 1Φ	1.75	28 x 29 x 10	47	MITSUBISHI / PEFY-P12NMAU-E4
FCU-19	ODU-2	COMMUNITY ROOM 130A	2048	140	72,000	56,670	45,730	80 / 67	57	80,000	70	99	≤ 45	208V / 3Φ	5.6	50 x 45 x 19	221	MITSUBISHI / PEFY-P72MNHU-4
FCU-20	ODU-2	COMMUNITY ROOM 130B	2541	190	96,000	75,600	58,550	80 / 67	57	108,000	70	102	≤ 45	208V / 3Φ	7.12	50 x 45 x 19	221	MITSUBISHI / PEFY-P96NMHU-E

REMARKS
1. DISCONNECT BY DIV 26
2. INDOOR UNITS TO BE BACNET COMPATIBLE FOR CONTROLS COMMUNICATION, TO BE PROVIDED WITH BACNET CARD

GRILLES, REGISTERS & DIFFUSERS (GRD)

PLAN CODE — GRILLE CFM

PLAN CODE	TYPE & DUTY	FACE SIZE	NECK SIZE	CEILING TYPE	MAX CFM	MAX TP (IN WC)	NC LEVEL MAX	MIN THROW T50 (FT)	MANUFACTURER & MODEL NO.
1	ROUND CONE DIFFUSER	18"Ø	8"Ø	DUCT MOUNTED	280	0.08	27	9	PRICE RCD
2	ROUND CONE DIFFUSER	22.5"Ø	10"Ø	DUCT MOUNTED	435	0.08	27	11	PRICE RCD
3	ROUND CONE DIFFUSER	27"Ø	12"Ø	DUCT MOUNTED	630	0.08	27	13	PRICE RCD
4	SQUARE CONE DIFFUSER	24" x 24"	8"Ø	MATCH CEILING	245	0.06	22	8	PRICE SCD
5	SQUARE CONE DIFFUSER	24" x 24"	10"Ø	MATCH CEILING	380	0.06	22	10	PRICE SCD
6	SIDEWALL SUPPLY GRILLE	16" x 24"	16" x 24"	MATCH SURFACE	245	0.07	19	28	PRICE 510
7	PERFORATED RETURN GRILLE	12" x 24"	10" x 22"	MATCH CEILING	670	0.12	22	N/A	PRICE 10
8	PERFORATED EXHAUST GRILLE	8" x 6"	8" x 6"	MATCH CEILING	156	0.17	25	N/A	PRICE 10
9	PERFORATED EXHAUST GRILLE	10" x 10"	10" x 10"	MATCH CEILING	360	0.17	25	N/A	PRICE 10

REMARKS
1. VERIFY FRAME TYPE OF ALL AIR DEVICES WITH ARCHITECTURAL REFLECTED CEILING PLAN BEFORE ORDERING
2. COORDINATE DIFFUSER NECK SIZE WITH DUCT SIZE ON FLOOR PLANS PRIOR TO ORDERING
3. NOMINAL SIZE

RADIANT PANEL - ELECTRIC (RCP)

PLAN CODE	ELECTRICAL: POWER	HEAT	L x W x H (IN)	MANUFACTURER	MODEL NO.
RCP-1	208V / 1Φ	500W	48 x 24 x 1	MARKEL	CP805

REMARKS
1. PROVIDE WALL MOUNTED THERMOSTAT
2. SEE CEILING PLANS FOR MOUNTING
3. COLOR SECTION BY ARCHITECH
4. DISCONNECT BY DIV 26

WALL HEATER - ELECTRIC (WH)

PLAN CODE	ELECTRICAL: POWER	HEAT	AMPS (A)	L x W x H (IN)	MANUFACTURER	MODEL NO.
WH-1	208V / 1Φ	1500	5.41	48 x 24 x 1	BROAN	174

REMARKS
1. PROVIDE WALL MOUNTED THERMOSTAT
2. SEE FLOOR PLANS FOR MOUNTING
3. COLOR SECTION BY ARCHITECH
4. DISCONNECT BY DIV 26

REFRIGERANT MANAGEMENT UNIT (BC-)

PLAN CODE	DUTY	QUANTITY OF PORTS	CONNECTED CAPACITY (BTUH)	ELECTRICAL: VOLT/PH	MCA (AMPS)	MAX. DIMENSIONS: WIDTH (INCHES)	HEIGHT (INCHES)	WEIGHT (LBS)	SOUND PRESSURE (dBA)	MANUFACTURER	MODEL NO.	REMARKS
BC-1	ODU-1	16	192,000	208 / 1	1.6	45	10	153	73	MITSUBISHI	CMB-P1016NU-KA2	PROVIDE BV-SERIES BALL VALVES, FULL PORT, 700 PSIG WORKING PRESSURE, RATED FOR REFRIGERANT TYPE
BC-2	ODU-2	8	144,000	208 / 1	0.8	36	10	106	74	MITSUBISHI	CMB-P108NU-JA1	PROVIDE BV-SERIES BALL VALVES, FULL PORT, 700 PSIG WORKING PRESSURE, RATED FOR REFRIGERANT TYPE

FAN - DESTRATIFICATION (DF)

PLAN CODE	DUTY	METHOD OF CONTROL	ELECTRICAL: VOLTS	FLA	PHASE	CURRENT (AMPS)	MAX. DIMENSIONS: DIAMETER (FT)	WEIGHT (LBS)	MANUFACTURER	MODEL NO.	REMARKS
DF-1	APPARATUS BAY	SWITCH	208	3.6	1	10	8	75	BIG ASS FANS	ESSENCE	DISCONNECT BY DIVISION 26. UNIT PROVIDED WITH CONTROLS FROM MANUFACTURER.
DF-1	APPARATUS BAY	SWITCH	208	3.6	1	10	8	75	BIG ASS FANS	ESSENCE	DISCONNECT BY DIVISION 26. UNIT PROVIDED WITH CONTROLS FROM MANUFACTURER.

JOB SITE ELEVATION: 4,950 FT

UNLESS OTHERWISE NOTED, ALL SCHEDULE DATA IS AT JOBSITE ELEVATION.

Babcock Design

Salt Lake City
52 Exchange Place
Salt Lake City, UT 84111
801.531.1144

Boise
800 W Main Street, Suite 940
Boise, ID 83702
208.424.7675

babcockdesign.com

Consultant

COLVIN ENGINEERING ASSOCIATES
505 East South Temple, Ste 100
Salt Lake City, Utah 84102-1004
Phone 801.322.2400
colvinengineering.com

CITY OF ALPINE

ALPINE FIRE STATION

50 E 100 N ALPINE, UT 84004

Revisions

Num. Description Date

Project Number 25116
Original Issue 04.16.2026
Project Status CONSTRUCTION DOCUMENTS

The information and content represented herein is considered by law the architect's instruments of service and are the property of Babcock Design. They are available for limited review and evaluation by clients, consultants, contractors, government agencies, vendors, and office personnel only in accordance with this notice. They are intended for use only for the project specified and are to be used for no other purpose or project including additions to or modification of the completed project. No part thereof may be copied, reproduced, photographed, modified, published, uploaded, transmitted, disclosed, sold, distributed to others in any way including in digital form, or otherwise used without the prior written consent of Babcock Design.

COPYRIGHT © 2025 BABCOCK DESIGN

Stamp

LICENSED PROFESSIONAL ENGINEER
STEPHEN G. CONNOR
187524
04/16/2026
STATE OF UTAH

Sheet Title

MECHANICAL SCHEDULES

Sheet Number

MH601

Copyright (C) 2025 by Colvin Engineering Associates, Inc. Salt Lake City, Utah. All rights reserved. Unauthorized copying and/or use is illegal and subject to prosecution.

Current as of: 4/16/2026 1:20:19 PM

Original drawing is 30" x 42" Autodesk Docs://25116 - ALPINE FIRE STATION 202/MECH.2025.095.00.Alpine Fire Station 202.V25.rvt

1 OVERALL ZONE PLAN

SCALE: 1/8" = 1'-0"

Copyright (C) 2025 by Colvin Engineering Associates, Inc. Salt Lake City, Utah. All rights reserved. Unauthorized copying and/or use is illegal and subject to prosecution.

Current as of: 4/15/2026 1:20:28 PM

Original drawing is 30" x 42". Autodesk Docs://25116 - ALPINE FIRE STATION 2022/MECH 2025 095.00 Alpine Fire Station 2022 V25.rvt

Babcock Design

Salt Lake City
52 Exchange Place
Salt Lake City, UT 84111
801.531.1144

Boise
800 W Main Street, Suite 940
Boise, ID 83702
208.424.7675

babcock**design**.com

Consultant

COLVIN ENGINEERING ASSOCIATES
505 East South Temple, Ste 100
Salt Lake City, Utah 84102-1004
Phone 801.322.2400
colvinengineering.com

CITY OF ALPINE

ALPINE FIRE STATION

50 E 100 N ALPINE, UT 84004

Revisions

Num.	Description	Date

Project Number	25116
Original Issue	04.16.2026
Project Status	CONSTRUCTION DOCUMENTS

The information and content represented herein is considered by law the architect's instruments of service and are the property of Babcock Design. They are available for limited review and evaluation by clients, consultants, contractors, government agencies, vendors, and office personnel only in accordance with this notice. They are intended for use only for the project specified and are to be used for no other purpose or extension without the written consent of Babcock Design. Unauthorized use, sharing, copying, duplicating, reproduced, photographed, modified, published, uploaded, transmitted, disclosed, sold, distributed to others in any way including in digital form, or otherwise used without the prior written consent of Babcock Design.

COPYRIGHT © 2025 BABCOCK DESIGN

Stamp

STEPHEN E. CONNOR 187524 04/16/2026 UTAH LICENSED PROFESSIONAL ENGINEER

Sheet Title

LEVEL 1
TEMPERATURE
CONTROL ZONE

Sheet Number

MI112

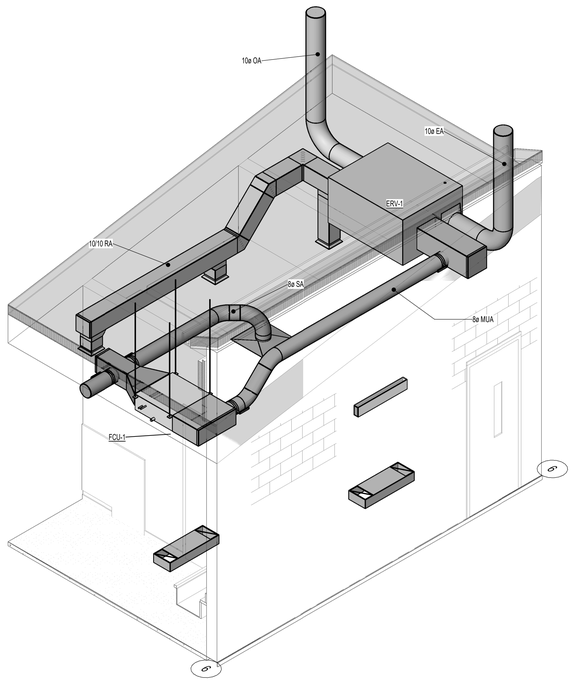

1 ERV-1 3D VIEW
SCALE: NONE

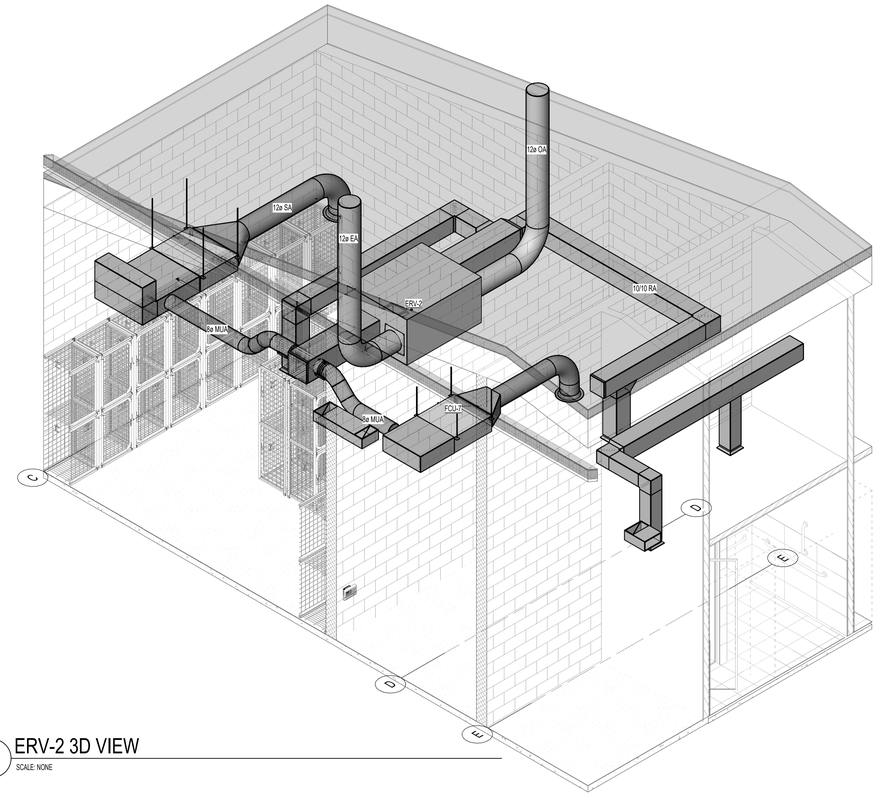

2 ERV-2 3D VIEW
SCALE: NONE

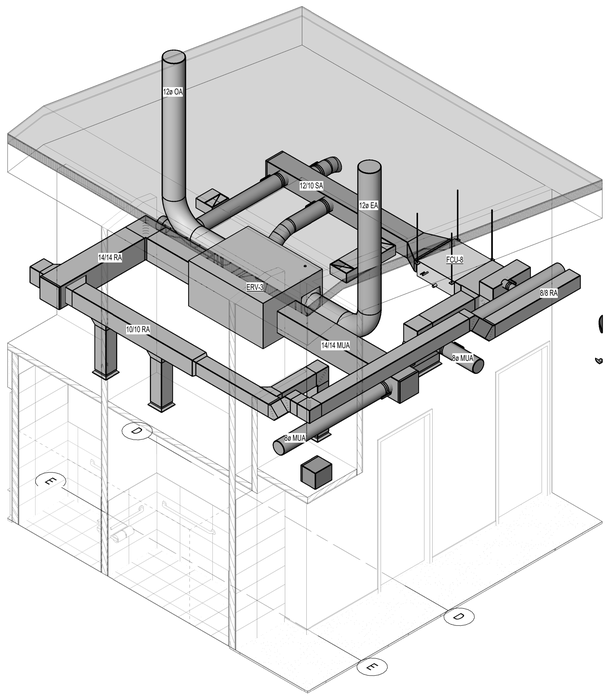

3 ERV-3 3D VIEW
SCALE: NONE

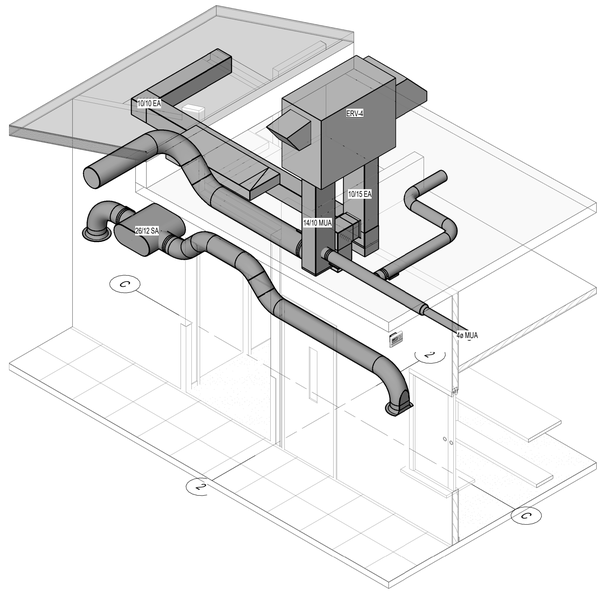

4 ERV-4 3D VIEW
SCALE: NONE

Copyright (C) 2025 by Colvin Engineering Associates, Inc. Salt Lake City, Utah. All rights reserved. Unauthorized copying and/or use is illegal and subject to prosecution.

Current as of: 4/16/2026 1:20:28 PM

Original drawing is 30" x 42" Autodesk Docs://25116 - ALPINE FIRE STATION 2026/MECH.2025.095.00.Alpine Fire Station 2026 V25.rvt

Babcock Design

Salt Lake City
52 Exchange Place
Salt Lake City, UT 84111
801.531.1144

Boise
800 W Main Street, Suite 940
Boise, ID 83702
208.424.7675

babcock**design**.com

Consultant

COLVIN ENGINEERING ASSOCIATES
505 East South Temple, Ste 100
Salt Lake City, Utah 84102-1004
Phone 801.322.2400
colvinengineering.com

CITY OF ALPINE

ALPINE FIRE STATION

50 E 100 N ALPINE, UT 84004

Revisions

Num.	Description	Date

Project Number	25116
Original Issue	04.16.2026
Project Status	CONSTRUCTION DOCUMENTS

The information and content represented herein is considered by law the architect's instruments of service and are the property of Babcock Design. They are available for limited review and evaluation by clients, contractors, and public agencies with approval authority over this project. Any other use or reuse without this notice. They are intended for use only for the project specified and are to be used for no other purpose or project including additions to or modification of the completed project. No part thereof may be copied, reproduced, photographed, modified, published, uploaded, transmitted, disclosed, sold, distributed to others in any way including in digital form, or otherwise used without the prior written consent of Babcock Design.

COPYRIGHT © 2025 BABCOCK DESIGN

Stamp

Sheet Title

MECHANICAL 3D VIEWS

Sheet Number

MH801

Copyright (C) 2025 by Colvin Engineering Associates, Inc. Salt Lake City, Utah. All rights reserved. Unauthorized copying and/or use is illegal and subject to prosecution.

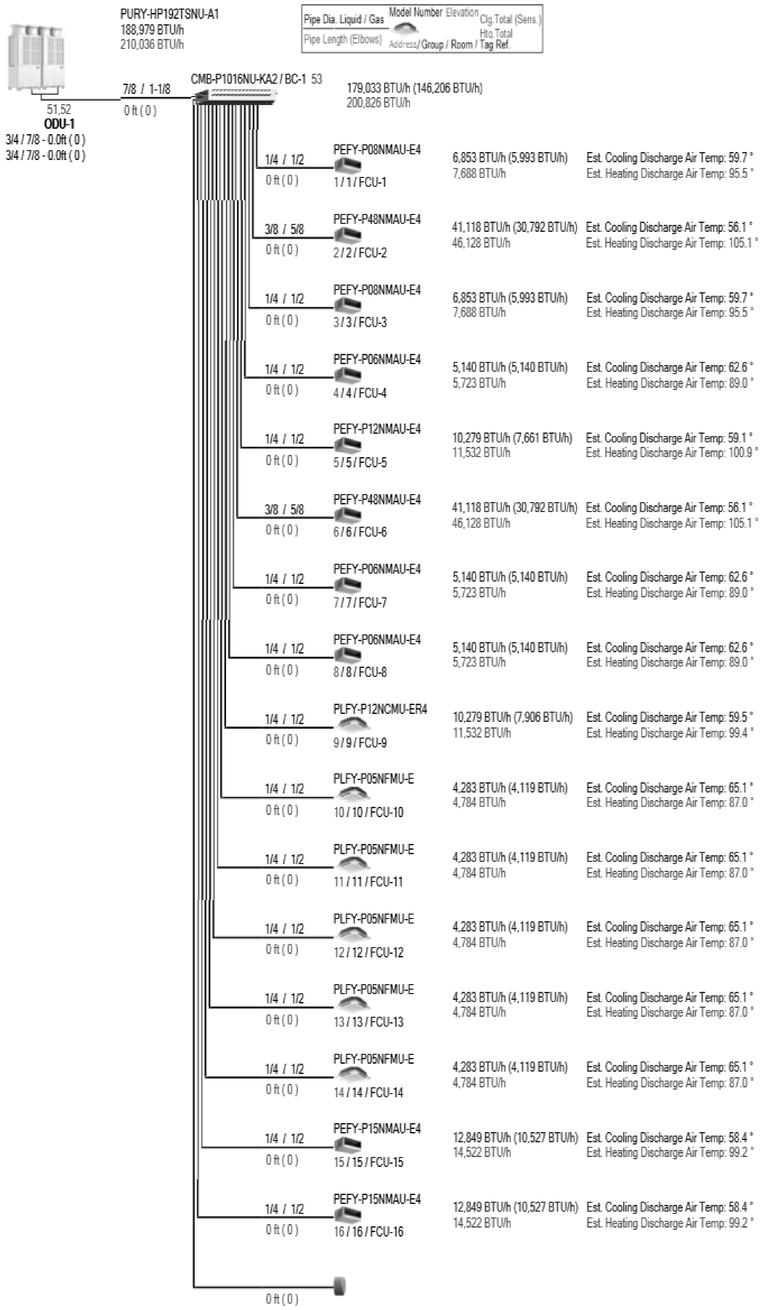

ODU-1 PIPING DIAGRAM

SCALE: NONE

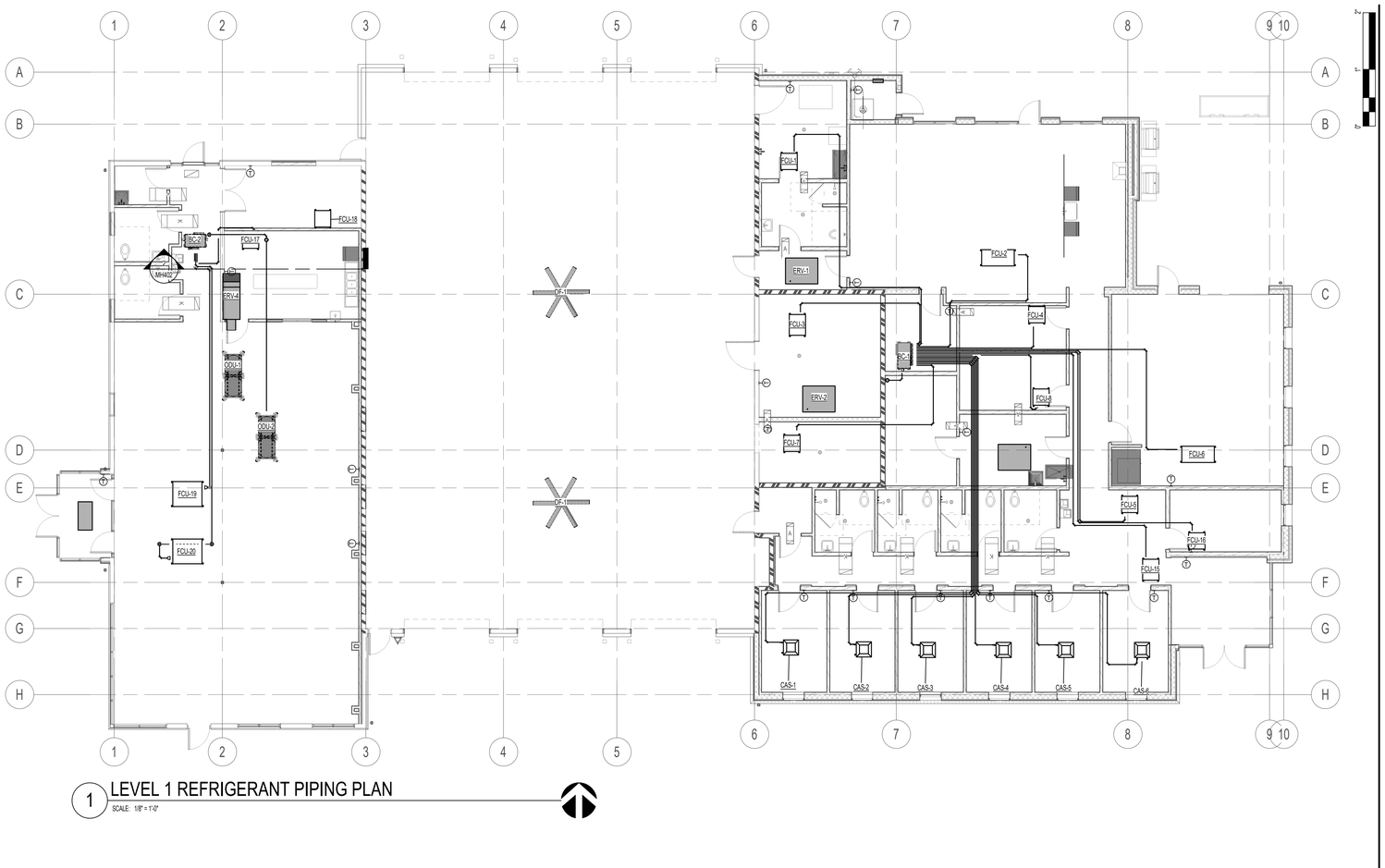

1 LEVEL 1 REFRIGERANT PIPING PLAN

SCALE: 1/8" = 1'-0"

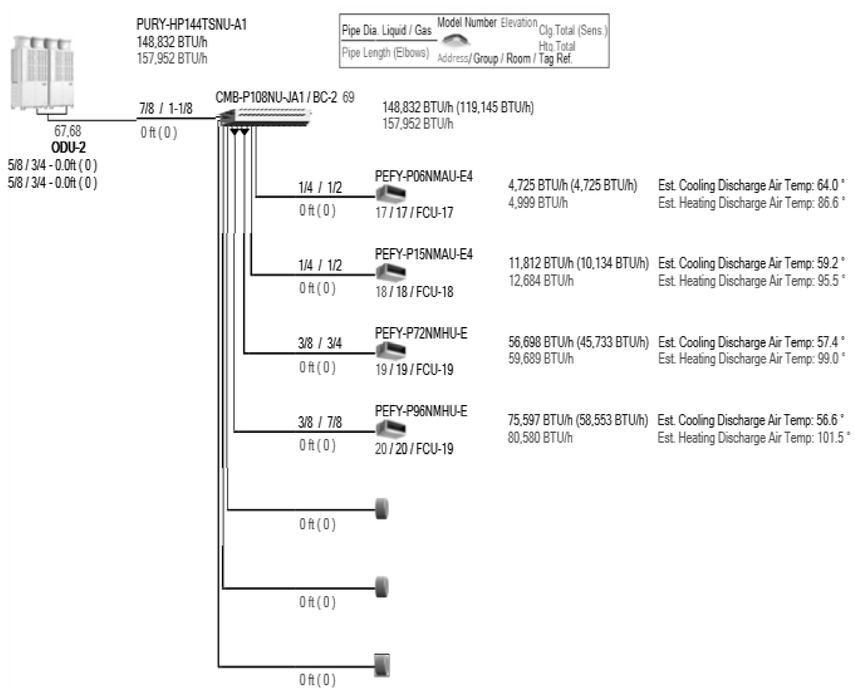

ODU-2 PIPING DIAGRAM

SCALE: NONE

Current as of: 4/16/2026 1:05:02 PM

Original drawing is 30" x 42" Autodesk Docs://25116 - ALPINE FIRE STATION 2022/MECH 2025.095.00 Alpine Fire Station 2021 V25.rvt

Babcock Design

Salt Lake City
52 Exchange Place
Salt Lake City, UT 84111
801.531.1144

Boise
800 W Main Street, Suite 940
Boise, ID 83702
208.424.7675

babcock**design**.com

Consultant

COLVIN ENGINEERING ASSOCIATES
505 East South Temple, Ste 100
Salt Lake City, Utah 84102-1004
Phone 801.322.2400
colvinengineering.com

CITY OF ALPINE

ALPINE FIRE STATION

50 E 100 N ALPINE, UT 84004

Revisions

Num.	Description	Date

Project Number	25116
Original Issue	04.16.2026
Project Status	CONSTRUCTION DOCUMENTS

The information and content represented herein is considered by law the architect's instruments of service and are the property of Babcock Design. They are available for limited review and evaluation by clients, contractors, and public agencies with regard to this project and are not to be used for any other purpose without the notice. They are intended for use only for the project specified and are to be used for no other purpose on project including additions to or modification of the completed project. No part thereof may be copied, reproduced, photographed, modified, published, uploaded, transmitted, disclosed, sold, distributed to others in any way including in digital form, or otherwise used without the prior written consent of Babcock Design.

COPYRIGHT © 2025 BABCOCK DESIGN

Stamp

Sheet Title

LEVEL 1
REFRIGERANT PIPING
PLAN

Sheet Number

MP112

Copyright (C) 2025 by Colvin Engineering Associates, Inc. Salt Lake City, Utah. All rights reserved. Unauthorized copying and/or use is illegal and subject to prosecution.

PLUMBING LEGEND

NOTE: NOT ALL SYMBOLS WILL BE USED ON ALL SHEETS.

GATE VALVE		CONDENSATE DRAIN	——X" D——
OS & Y PATTERN GATE VALVE		DOMESTIC COLD WATER	——X" DCW——
BALL VALVE		DOMESTIC HOT WATER	—X" DHW—
BUTTERFLY VALVE		DOMESTIC HOT WATER CIRCULATION	—X" DHWC—
MOTORIZED ACTUATOR	M M	GREASE WASTE ABOVE GRADE	——X" GW——
GAS COCK		GREASE WASTE BELOW GRADE	— X" GW —
PLUG VALVE		NATURAL GAS	——X" G——
CHECK VALVE (SWING OR LIFT AS REQ'D)		OVERFLOW DRAIN	——X" OD——
SOLENOID VALVE		ROOF DRAIN	——X" RD——
AUTOMATIC CONTROL VALVE (2-WAY)		SANITARY (PLBG) VENT	— — — X" V — — —
AUTOMATIC CONTROL VALVE (3-WAY)		SANITARY WASTE ABOVE GRADE	——X" W——
PRESSURE REDUCING VALVE		SANITARY WASTE BELOW GRADE	— — X" W — —
P&T RELIEF VALVE		LABORATORY SANITARY (PLBG) VENT	— — — X" LV— — —
AIR VENT (AUTOMATIC)		LABORATORY SANITARY WASTE ABOVE GRADE	——X" LW——
CURB COCK		LABORATORY SANITARY WASTE BELOW GRADE	— — X" LW — —
STRAINER W/ BLOW DOWN HOSE FITTING		COMPRESSED AIR	——X" CA——
CALIBRATED BALANCE VALVE		TEMPERED WATER	——X" T——
VENTURI FLOW METER		ARGON	——X" AR——
PET COCK OR GAUGE COCK		CARBON DIOXIDE	——X" CO2——
PRESSURE GAUGE W/ GAUGE COCK		DEIONIZED WATER	——X" DI——
THERMOMETER		DEIONIZED WATER CIRCULATION	——X" DIC——
TEMPERATURE & PRESSURE TEST PLUG		FUEL OIL RETURN	——X" FOR——
IN-LINE PUMP		FUEL OIL SUPPLY	——X" FOS——
FLOW SWITCH	F	HELIUM	——X" HE——
AQUASTAT	A	HYDROGEN	——X" H——
FLOW METER	FM	INDUSTRIAL WATER (NON-POTABLE)	——X" IW——
TEMPERATURE SENSING WELL	T	INDUSTRIAL COLD WATER (NON-POTABLE)	——X" ICW——
HOSE BIBB OR SILLCOCK		INDUSTRIAL HOT WATER (NON-POTABLE)	-X" IHW-
YARD HYDRANT	H	INDUSTRIAL HOT WATER CIRCULATION (NON-POTABLE)	X" IHWC
FLOOR DRAIN		LIQUEFIED PETROLEUM GAS	——X" LPG——
FLOOR SINK		MEDICAL AIR	——X" MA——
MANHOLE		NITROGEN	——X" N——
WALL CLEANOUT		NITROUS OXIDE	——X" N2O——
FLOOR OR GRADE CLEANOUT		OXYGEN	——X" O2——
GRADE CLEANOUT WITH CONCRETE PAD		REVERSE OSMOSIS	——X" RO——
VENT THROUGH THE ROOF		VACUUM	——X" VAC——
REDUCED PRESSURE BACKFLOW PREVENTER	RPBP	WATER TREATMENT	——X" WT——
EXPANSION JOINT		HEAT TRACING	
EXPANSION PIPE CONNECTION		POINT OF CONNECTION	
DIRECTION OF FLOW		POINT OF REMOVAL	
ELBOW DOWN		DETAIL TAG	DETAIL NO. / DRAWING NO.
ELBOW UP		KEYED NOTE	X
PIPE CAP		SECTION CUT LINE	SECTION NO. / DRAWING NO. — SIM — A101
REDUCER		ACCESS PANEL	
PIPE TEE	DOWN UP		
UNION			

ABBREVIATIONS

NOTE: NOT ALL ABBREVIATIONS WILL BE USED ON SHEETS.

AD	ACCESS DOOR
AF	AIRFOIL
AFF	ABOVE FINISHED FLOOR
ALT	ALTERNATE
BI	BACKWARD INCLINE
BOD	BOTTOM OF DUCT
BOP	BOTTOM OF PIPE
BTU/H	BRITISH THERMAL UNITS PER HOUR
CAP	CAPACITY
CAS	COMBUSTION AIR SUPPLY
CBV	CALIBRATED BALANCE VALVE
CFM	CUBIC FEET PER MINUTE
CV	CONSTANT VOLUME
CV	CONTROL VALVE
DB	DRY BULB
DF	DRINKING FOUNTAIN
DIA	DIAMETER
DN	DOWN
DSN	DOWN SPOUT NOZZLE
DW	DISHWASHER
E	EXISTING
EA	EACH OR EXHAUST AIR
EAT	ENTERING AIR TEMPERATURE
EFF	EFFICIENCY
ELEV	ELEVATION
ENCL	ENCLOSURE
ESP	EXTERNAL STATIC PRESSURE
ET	EXPANSION TANK
EWC	ELECTRIC WATER COOLER
EWT	ENTERING WATER TEMPERATURE
FCO	FLOOR CLEAN OUT
FD	FLOOR DRAIN
FO	FLAT OVAL
FPM	FEET PER MINUTE
FS	FLOOR SINK
FT	FEET
FV	FACE VELOCITY
GA	GAUGE
GAL	GALLON
GD	GARAGE DRAIN
GEA	GREASE EXHAUST AIR
GPM	GALLONS PER MINUTE
HP	HORSE POWER
HR	HOUR
HT	HEIGHT
IN	INCH
IN WC	INCHES OF WATER COLUMN
IN WG	INCHES OF WATER GAUGE
L	LAVATORY OR LOUVER
LAT	LEAVING AIR TEMPERATURE
LBS	POUNDS
LWT	LEAVING WATER TEMPERATURE
MAX	MAXIMUM
MBH	THOUSAND BRITISH THERMAL UNITS
MECH	MECHANICAL
MIN	MINIMUM
MPSA	MEDIUM PRESSURE SUPPLY AIR
MUA	MAKE-UP AIR
MVD	MANUAL VOLUME DAMPER
NC	NOISE CRITERIA OR NORMALLY CLOSED
NIC	NOT IN CONTRACT
NO	NUMBER
NOM	NOMINAL
NTS	NOT TO SCALE
OA	OUTSIDE AIR
OBD	OPPOSED BLADE DAMPER
OD	OVERFLOW DRAIN
OFCI	OWNER FURNISHED, CONTRACTOR INSTALLED
OFOI	OWNER FURNISHED, OWNER INSTALLED
PD	PRESSURE DROP
PG	PROPYLENE GLYCOL
POC	POINT OF CONNECTION
PRV	PRESSURE REDUCING VALVE
PSI	POUNDS PER SQUARE INCH
PSIG	POUNDS PER SQUARE INCH GAUGE
RA	RETURN AIR
RAD	RADIUS
RD	ROOF DRAIN
RLF	RELIEF AIR
RPBP	REDUCED PRESSURE BACKFLOW PREVENTOR
SA	SUPPLY AIR OR SHOCK ARRESTOR
SEN	SENSIBLE
SF	SQUARE FEET
SIM	SIMILAR
SL	SEA LEVEL
SP	STATIC PRESSURE
SS	SERVICE SINK OR STAINLESS STEEL
TA	TRANSFER AIR
TOD	TOP OF DUCT
TSP	TOTAL STATIC PRESSURE
TYP.	TYPICAL
U	URINAL
V	VENT
VAV	VARIABLE AIR VOLUME
VD	VOLUME DAMPER
VENT	FLUE VENT
VFD	VARIABLE FREQUENCY DRIVE
VOL	VOLUME
VTR	VENT THROUGH THE ROOF
W	WASTE
W/	WITH
W/O	WITHOUT
WB	WET BULB
WC	WATER CLOSET
WCO	WALL CLEANOUT
WHA	WATER HAMMER ARRESTOR
WPD	WATER PRESSURE DROP
WT	WEIGHT
Ø	ROUND OR DIAMETER

DRAWING INDEX - PLUMBING

#	SHEET NAME
PD112	LEVEL 1 PLUMBING DEMO PLAN
PL112	LEVEL 1 PLUMBING PLAN
PL131	ROOF PLUMBING PLAN
PL401	ENLARGED PLUMBING PLANS
PL402	ENLARGED PLUMBING PLANS
PL501	PLUMBING DETAILS
PL601	PLUMBING SCHEDULES
PL801	PLUMBING ISOMETRICS

Babcock Design

Salt Lake City
52 Exchange Place
Salt Lake City, UT 84111
801.531.1144

Boise
800 W Main Street, Suite 940
Boise, ID 83702
208.424.7675

babcock**design**.com

Consultant

COLVIN ENGINEERING ASSOCIATES
505 East South Temple, Ste 100
Salt Lake City, Utah 84102-1004
Phone 801.322.2400
colvinengineering.com

CITY OF ALPINE

ALPINE FIRE STATION

50 E 100 N ALPINE, UT 84004

Revisions

Num.	Description	Date

Project Number	25116
Original Issue	04.16.2026
Project Status	CONSTRUCTION DOCUMENTS

The information and content represented herein is considered by law the architect's instruments of service and are the property of Babcock Design. They are available for limited review and evaluation by clients, consultants, contractors, government agencies, vendors, and office personnel only in accordance with this notice. They are intended for use only for the project specified and are to be used for no other purpose or project including additions to or modification of the completed project. No part thereof may be copied, reproduced, published or used in any way by anyone for any purpose without the prior written consent of others in any way including in digital form, or otherwise used without the prior written consent of Babcock Design.

COPYRIGHT © 2025 BABCOCK DESIGN

Stamp

Sheet Title

PLUMBING LEGEND, SYMBOLS & ABBREVIATIONS

Sheet Number

PL001

PROJECT DESIGN TEAM

Project Manager: Rob Van , 801-505-5404 , rvan@cea-ut.com
Designer: Yonadab De La Cruz , 385-528-1251 , ydelacruz@cea-ut.com
BIM Modeler: Danette Marcoccia , 801-505-5393 , dmarcoccia@cea-ut.com

Current as of: 4/16/2026 7:20:23 PM
Original drawing is 30" x 42" Autodesk Docs://25116 - ALPINE FIRE STATION 2026/MECH 2025.095.00 Alpine Fire Station 2026 V25.rvt

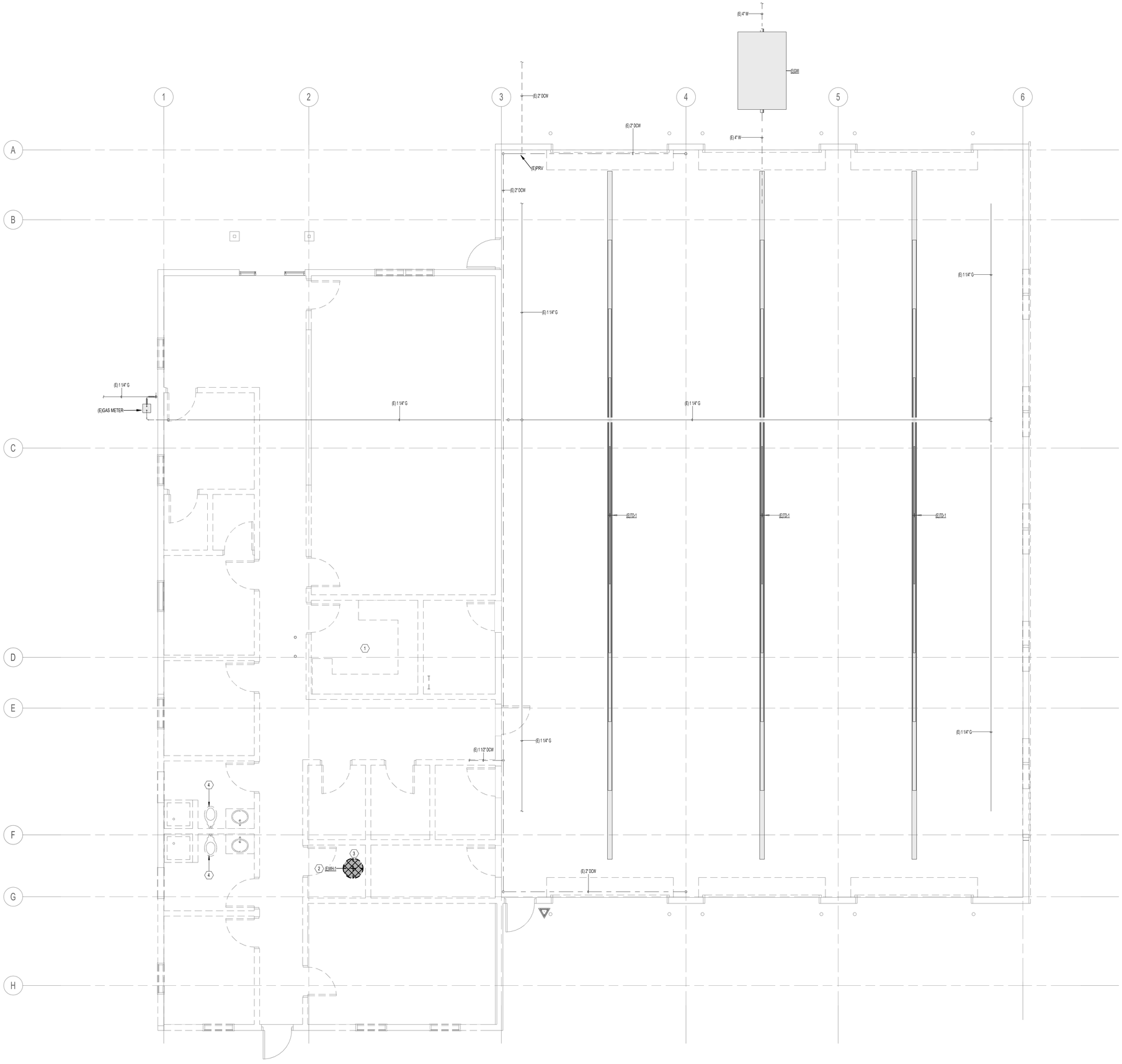

1 LEVEL 1 PLUMBING DEMO PLAN

SCALE: 1/4" = 1'-0"

GENERAL NOTES

1. EXISTING PLUMBING PIPING ROUTING ON THIS PLAN IS NOT EXACT. FIELD VERIFY EXACT ROUTING.
2. ALL ITEMS SHOWN LIGHT ARE EXISTING.
3. ALL ITEMS SHOWN DARK AND DASHED ARE TO BE DEMOLISHED.

KEYED NOTES

1. EXISTING KITCHEN FIXTURES ARE TO BE DEMOLISHED. CUT DCW & DHW PIPING INTO CEILING, CAP & ABANDON. WASTE PIPING IS TO BE CUT BACK BELOW FLOOR, CAP & ABANDON. VERIFY EXISTING CONDITIONS.
2. EXISTING WATER HEATER TO BE RELOCATED TO NEW JANITOR CLOSET. CUT DCW & DHW PIPING INTO CEILING, CAP & ABANDON.
3. EXISTING JANITOR SINK TO BE DEMOLISHED. CUT DCW & DHW PIPING INTO CEILING, CAP & ABANDON. WASTE PIPING IS TO BE CUT BACK BELOW FLOOR, CAP & ABANDON. VERIFY EXISTING CONDITIONS.
4. EXISTING RESTROOM FIXTURES ARE TO BE DEMOLISHED. CUT DCW & DHW PIPING INTO CEILING, CAP & ABANDON. WASTE PIPING IS TO BE CUT BACK BELOW FLOOR, CAP & ABANDON. VERIFY EXISTING CONDITIONS.

Babcock Design

Salt Lake City
52 Exchange Place
Salt Lake City, UT 84111
801.531.1144

Boise
800 W Main Street, Suite 940
Boise, ID 83702
208.424.7675

babcock**design**.com

Consultant

COLVIN ENGINEERING ASSOCIATES
505 East South Temple, Ste 100
Salt Lake City, Utah 84102-1004
Phone 801.322.2400
colvinengineering.com

CITY OF ALPINE

ALPINE FIRE STATION

50 E 100 N ALPINE, UT 84004

Revisions

Num.	Description	Date

Project Number	25116
Original Issue	04.16.2026
Project Status	CONSTRUCTION DOCUMENTS

The information and content represented herein is considered by law the architect's instruments of service and are the property of Babcock Design. They are available for limited review and evaluation by clients, consultants, contractors, government agencies, vendors, and office personnel only in accordance with this notice. They are intended for use only for the project specified and are to be used for no other purpose or project including additions to or modification of the completed project. No part thereof may be copied, reproduced, photographed, modified, published, uploaded, transmitted, disclosed, sold, distributed to others in any way including in digital form, or otherwise used without the prior written consent of Babcock Design.

COPYRIGHT © 2025 BABCOCK DESIGN

Stamp

Sheet Title

LEVEL 1 PLUMBING DEMO PLAN

Sheet Number

PD112

Copyright (C) 2025 by Colvin Engineering Associates, Inc. Salt Lake City, Utah. All rights reserved. Unauthorized copying and/or use is illegal and subject to prosecution.

Current as of: 4/16/2026 1:20:38 PM

Original drawing is 30" x 42" Autodesk Docs://25116 - ALPINE FIRE STATION 202/MECH 2025.095.00 Alpine Fire Station 202.V25.rvt

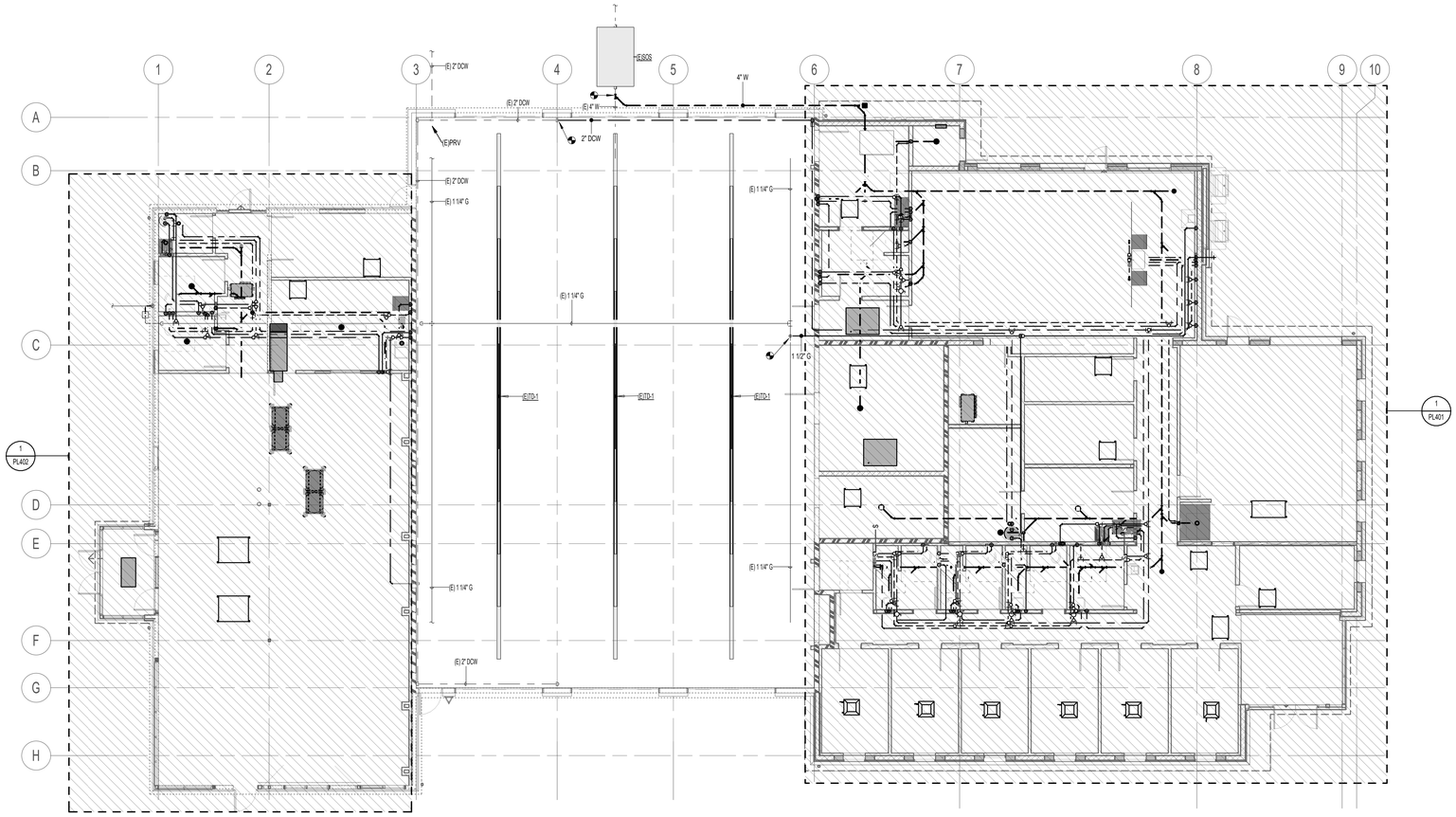

1 LEVEL 1 PLUMBING PLAN

SCALE: 1/8" = 1'-0"

GENERAL NOTES

1. ALL ITEMS SHOWN LIGHT ARE EXISTING.
2. ALL ITEMS SHOWN DASHED AND HATCHED ARE TO BE DEMOLISHED.
3. ALL ITEMS SHOWN DARK AND SOLID ARE NEW.
4. ALL FLOOR DRAINS AND FLOOR SINKS TO BE PROVIDED WITH TRAP PRIMERS OR TRAP GUARD. VERIFY WITH LOCAL AHJ FOR COMPLIANCE.
5. ALL VALVES TO BE LOCATED ABOVE ACCESSIBLE CEILINGS.
6. PROVIDE ACCESS PANELS AS REQUIRED.
7. EACH FIXTURE TO HAVE SEPARATE ISOLATIONS VALVES FOR HOT AND COLD WATER.
8. CONTRACTOR TO COORDINATE WITH ELECTRICAL AND DO NOT ROUTE PIPING OVER ELECTRICAL EQUIPMENT.
9. ALL PIPING TO BE HELD TIGHT TO BOTTOM OF STRUCTURE.
10. OFFSET AND TRANSITION PIPING AS REQUIRED.
11. CONTRACTOR TO COORDINATE ALL INSTALLATIONS WITH OTHER TRADES.
12. ALL FIRE PROTECTION PIPING TO BE SIZED BY FIRE PROTECTION CONTRACTOR.
13. ALL SANITARY WASTE, ROOF DRAINS, AND OVERFLOW DRAINS 2-1/2" AND SMALLER TO BE SLOPED AT 1/4" PER LINEAR FOOT. PIPES 3" AND LARGER TO BE SLOPED AT 1/8" PER LINEAR FOOT.
14. WHERE INDIVIDUAL OUTLET PIPING SIZE IS NOT SHOWN, SEE PLUMBING SCHEDULE SIZE.
15. DO NOT ROUTE OR LOCATE ANY PLUMBING PIPE OR EQUIPMENT OVER ANY ELECTRICAL EQUIPMENT.
16. NO PIPE TO BE RUN OVER ANY ELECTRICAL OR COMMUNICATION ROOMS.
17. CONTRACTOR SHALL PROVIDE ALL INCIDENTAL OFFSETS REQUIRED FOR COMPLETE OPERATIONAL MECHANICAL SYSTEM.
18. ALL WATER CONNECTIONS TO SINKS, LAVS AND CLOSETS SHALL BE MADE WITH A 1/2" CONNECTION UNLESS OTHERWISE NOTED.

Copyright (C) 2025 by Colvin Engineering Associates, Inc. Salt Lake City, Utah. All rights reserved. Unauthorized copying and/or use is illegal and subject to prosecution.

Current as of: 4/15/2026 1:25:26 PM

Original drawing is 30" x 42". Autodesk Docs://25116 - ALPINE FIRE STATION 2022/MECH 2025 095.00 Alpine Fire Station 2022 V25.rvt

Babcock Design

Salt Lake City
52 Exchange Place
Salt Lake City, UT 84111
801.531.1144

Boise
800 W Main Street, Suite 940
Boise, ID 83702
208.424.7675

babcock**design**.com

Consultant

COLVIN ENGINEERING ASSOCIATES
505 East South Temple, Ste 100
Salt Lake City, Utah 84102-1004
Phone 801.322.2400
colvinengineering.com

CITY OF ALPINE

ALPINE FIRE STATION

50 E 100 N ALPINE, UT 84004

Revisions

Num.	Description	Date

Project Number	25116
Original Issue	04.16.2026
Project Status	CONSTRUCTION DOCUMENTS

The information and content represented herein is considered by law the architect's instruments of service and are the property of Babcock Design. They are available for limited review and evaluation by clients, consultants, contractors, government agencies, vendors, and office personnel only in accordance with this notice. They are intended for use only for the project specified and are to be used for no other purpose or extension without the written consent of Babcock Design. Unauthorized use, sharing, sale, or publication, reproduced, photographed, modified, published, uploaded, transmitted, disclosed, sold, distributed to others in any way including in digital form, or otherwise used without the prior written consent of Babcock Design.

COPYRIGHT © 2025 BABCOCK DESIGN

Stamp

Sheet Title

LEVEL 1 PLUMBING PLAN

Sheet Number

PL112

GENERAL NOTES

1. ALL ITEMS SHOWN LIGHT ARE EXISTING.
2. ALL ITEMS SHOWN DASHED AND HATCHED ARE TO BE DEMOLISHED.
3. ALL ITEMS SHOWN DARK AND SOLID ARE NEW.
4. ALL FLOOR DRAINS AND FLOOR SINKS TO BE PROVIDED WITH TRAP PRIMERS OR TRAP GUARD. VERIFY WITH LOCAL AHJ FOR COMPLIANCE.
5. ALL VALVES TO BE LOCATED ABOVE ACCESSIBLE CEILINGS.
6. PROVIDE ACCESS PANELS AS REQUIRED.
7. EACH FIXTURE TO HAVE SEPARATE ISOLATIONS VALVES FOR HOT AND COLD WATER.
8. CONTRACTOR TO COORDINATE WITH ELECTRICAL AND DO NOT ROUTE PIPING OVER ELECTRICAL EQUIPMENT.
9. ALL PIPING TO BE HELD TIGHT TO BOTTOM OF STRUCTURE.
10. OFFSET AND TRANSITION PIPING AS REQUIRED.
11. CONTRACTOR TO COORDINATE ALL INSTALLATIONS WITH OTHER TRADES.
12. ALL FIRE PROTECTION PIPING TO BE SIZED BY FIRE PROTECTION CONTRACTOR.
13. ALL SANITARY WASTE, ROOF DRAINS, AND OVERFLOW DRAINS 2-1/2" AND SMALLER TO BE SLOPED AT 1/4" PER LINEAR FOOT. PIPES 3" AND LARGER TO BE SLOPED AT 1/8" PER LINEAR FOOT.
14. WHERE INDIVIDUAL OUTLET PIPING SIZE IS NOT SHOWN, SEE PLUMBING SCHEDULE SIZE.
15. DO NOT ROUTE OR LOCATE ANY PLUMBING PIPE OR EQUIPMENT OVER ANY ELECTRICAL EQUIPMENT.
16. NO PIPE TO BE RUN OVER ANY ELECTRICAL OR COMMUNICATION ROOMS.
17. CONTRACTOR SHALL PROVIDE ALL INCIDENTAL OFFSETS REQUIRED FOR COMPLETE OPERATIONAL MECHANICAL SYSTEM.
18. ALL WATER CONNECTIONS TO SINKS, LAVS AND CLOSETS SHALL BE MADE WITH A 1/2" CONNECTION UNLESS OTHERWISE NOTED.

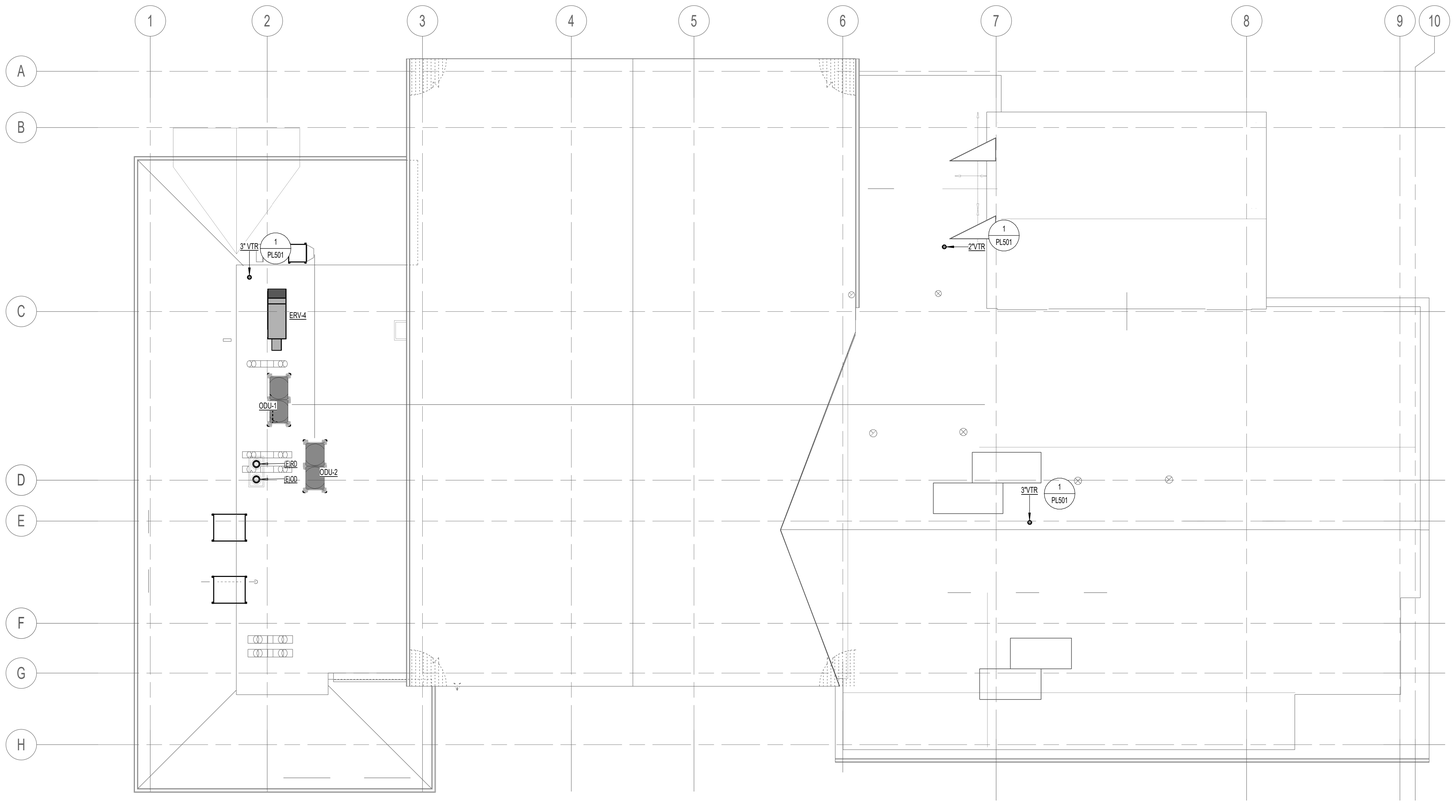

1 ROOF PLUMBING PLAN
SCALE: 1/8" = 1'-0"

Babcock Design

Salt Lake City
52 Exchange Place
Salt Lake City, UT 84111
801.531.1144

Boise
800 W Main Street, Suite 940
Boise, ID 83702
208.424.7675

babcock**design**.com

Consultant

COLVIN ENGINEERING ASSOCIATES
505 East South Temple, Ste 100
Salt Lake City, Utah 84102-1004
Phone 801.322.2400
colvinengineering.com

CITY OF ALPINE

ALPINE FIRE STATION

50 E 100 N ALPINE, UT 84004

Revisions

Num.	Description	Date

Project Number	25116
Original Issue	04.16.2026
Project Status	CONSTRUCTION DOCUMENTS

The information and content represented herein is considered by law the architect's instruments of service and are the property of Babcock Design. They are available for limited review and evaluation by clients, consultants, contractors, government agencies, vendors, and office personnel only in accordance with this notice. They are intended for use only for the project specified and are to be used for no other purpose or project including additions to or modification of the completed project. No part thereof may be copied, reproduced, published or used in any way by anyone for any purpose without the prior written consent of others in any way including in digital form, or otherwise used without the prior written consent of Babcock Design.

COPYRIGHT © 2025 BABCOCK DESIGN

Stamp

Sheet Title

ROOF PLUMBING PLAN

Sheet Number

PL131

Copyright (C) 2025 by Colvin Engineering Associates, Inc. Salt Lake City, Utah. All rights reserved. Unauthorized copying and/or use is illegal and subject to prosecution.

Current as of: 4/16/2026 7:20:49 PM

Original drawing is 30" x 42" Autodesk Docs://25116 - ALPINE FIRE STATION 2026/MECH 2025.095.00 Alpine Fire Station 2026 V25.rvt

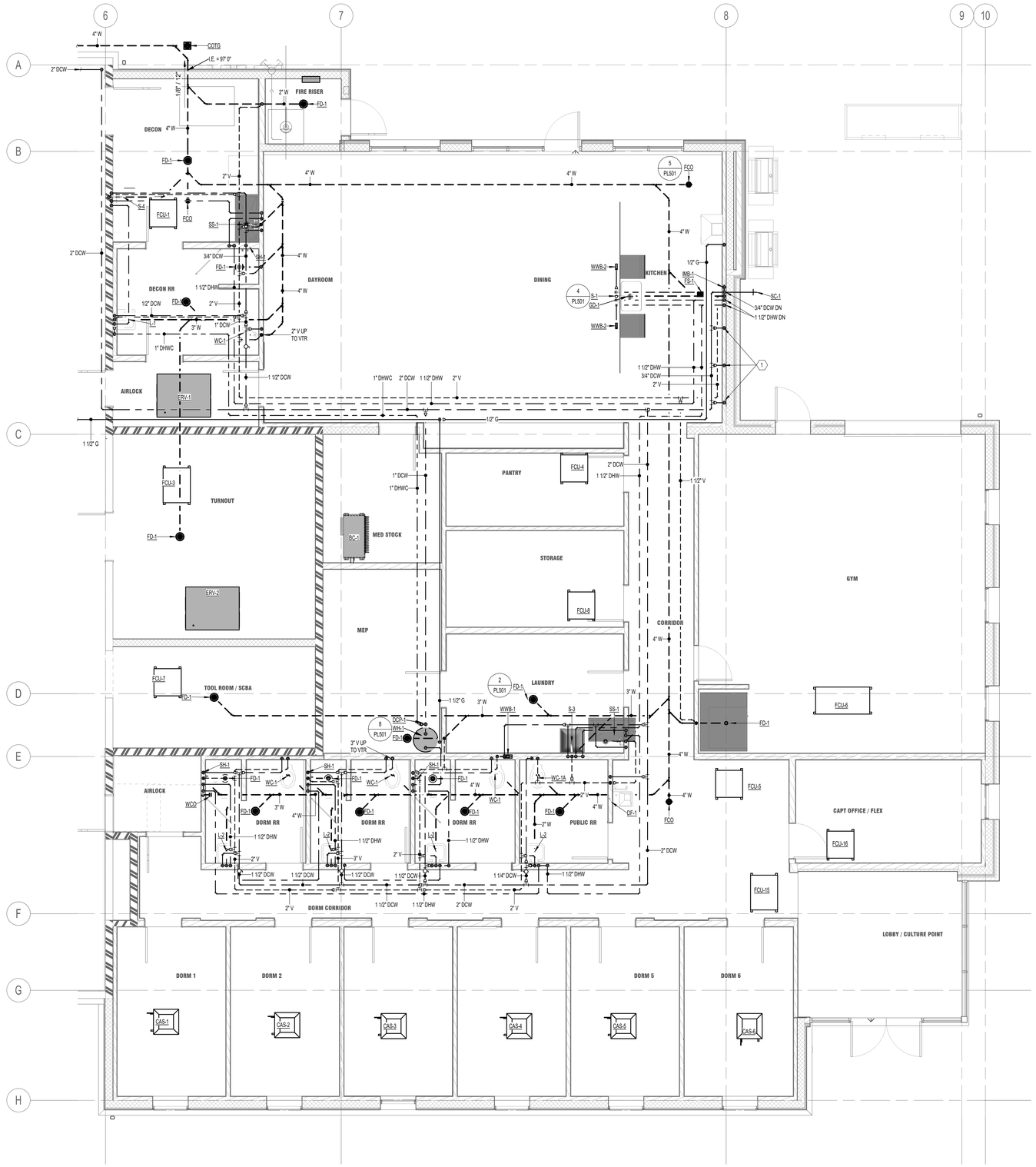

1 ENLARGED PLUMBING PLAN - NEW ADDITION

SCALE: 1/4" = 1'-0"

GENERAL NOTES

1. ALL ITEMS SHOWN LIGHT ARE EXISTING.
2. ALL ITEMS SHOWN DASHED AND HATCHED ARE TO BE DEMOLISHED.
3. ALL ITEMS SHOWN DARK AND SOLID ARE NEW.
4. ALL FLOOR DRAINS AND FLOOR SINKS TO BE PROVIDED WITH TRAP PRIMERS OR TRAP GUARD. VERIFY WITH LOCAL AHJ FOR COMPLIANCE.
5. ALL VALVES TO BE LOCATED ABOVE ACCESSIBLE CEILINGS.
6. PROVIDE ACCESS PANELS AS REQUIRED.
7. EACH FIXTURE TO HAVE SEPARATE ISOLATIONS VALVES FOR HOT AND COLD WATER.
8. CONTRACTOR TO COORDINATE WITH ELECTRICAL AND DO NOT ROUTE PIPING OVER ELECTRICAL EQUIPMENT.
9. ALL PIPING TO BE HELD TIGHT TO BOTTOM OF STRUCTURE.
10. OFFSET AND TRANSITION PIPING AS REQUIRED.
11. CONTRACTOR TO COORDINATE ALL INSTALLATIONS WITH OTHER TRADES.
12. ALL FIRE PROTECTION PIPING TO BE SIZED BY FIRE PROTECTION CONTRACTOR.
13. ALL SANITARY WASTE, ROOF DRAINS, AND OVERFLOW DRAINS 2-1/2" AND SMALLER TO BE SLOPED AT 1/4" PER LINEAR FOOT. PIPES 3" AND LARGER TO BE SLOPED AT 1/8" PER LINEAR FOOT.
14. WHERE INDIVIDUAL OUTLET PIPING SIZE IS NOT SHOWN, SEE PLUMBING SCHEDULE SIZE.
15. DO NOT ROUTE OR LOCATE ANY PLUMBING PIPE OR EQUIPMENT OVER ANY ELECTRICAL EQUIPMENT.
16. NO PIPE TO BE RUN OVER ANY ELECTRICAL OR COMMUNICATION ROOMS.
17. CONTRACTOR SHALL PROVIDE ALL INCIDENTAL OFFSETS REQUIRED FOR COMPLETE OPERATIONAL MECHANICAL SYSTEM.
18. ALL WATER CONNECTIONS TO SINKS, LAVS AND CLOSETS SHALL BE MADE WITH A 1/2" CONNECTION UNLESS OTHERWISE NOTED.

KEYED NOTES

1 PROVIDE 1/2" DCW STUB OUT FOR EACH REFRIGERATOR.

Copyright (C) 2025 by Colvin Engineering Associates, Inc. Salt Lake City, Utah. All rights reserved. Unauthorized copying and/or use is illegal and subject to prosecution.

Babcock Design

Salt Lake City
52 Exchange Place
Salt Lake City, UT 84111
801.531.1144

Boise
800 W Main Street, Suite 940
Boise, ID 83702
208.424.7675

babcockdesign.com

Consultant

COLVIN ENGINEERING ASSOCIATES
505 East South Temple, Ste 100
Salt Lake City, Utah 84102-1004
Phone 801.322.2400
colvinengineering.com

CITY OF ALPINE

ALPINE FIRE STATION

50 E 100 N ALPINE, UT 84004

Revisions

Num.	Description	Date

Project Number	25116
Original Issue	04.16.2026
Project Status	CONSTRUCTION DOCUMENTS

The information and content represented herein is considered by law the architect's instruments of service and are the property of Babcock Design. They are available for limited review and evaluation by clients, consultants, contractors, government agencies, vendors, and office personnel only in accordance with this agreement. Babcock Design shall not be responsible for any unauthorized use of, or changes to, this design or project including additions to or modification of the completed project. No part thereof may be copied, reproduced, photographed, modified, published, uploaded, transmitted, disclosed, sold, distributed to others in any way including in digital form, or otherwise used without the prior written consent of Babcock Design.

COPYRIGHT © 2025 BABCOCK DESIGN

Stamp

STEPHEN G. CONNOR 187524 04/16/2026 LICENSED PROFESSIONAL ENGINEER STATE OF UTAH

Sheet Title

ENLARGED PLUMBING PLANS

Sheet Number

PL401

Current as of: 4/15/2026 1:20:27 PM
Original drawing is 30" x 42" Autodesk Docs://25116 - ALPINE FIRE STATION 202/MECH 2025.095.00 Alpine Fire Station 202 V25.rvt

Copyright (C) 2025 by Colvin Engineering Associates, Inc. Salt Lake City, Utah. All rights reserved. Unauthorized copying and/or use is illegal and subject to prosecution.

GENERAL NOTES

1. ALL ITEMS SHOWN LIGHT ARE EXISTING.
2. ALL ITEMS SHOWN DASHED AND HATCHED ARE TO BE DEMOLISHED.
3. ALL ITEMS SHOWN DARK AND SOLID ARE NEW.
4. ALL FLOOR DRAINS AND FLOOR SINKS TO BE PROVIDED WITH TRAP PRIMERS OR TRAP GUARD. VERIFY WITH LOCAL AHJ FOR COMPLIANCE.
5. ALL VALVES TO BE LOCATED ABOVE ACCESSIBLE CEILINGS.
6. PROVIDE ACCESS PANELS AS REQUIRED.
7. EACH FIXTURE TO HAVE SEPARATE ISOLATIONS VALVES FOR HOT AND COLD WATER.
8. CONTRACTOR TO COORDINATE WITH ELECTRICAL AND DO NOT ROUTE PIPING OVER ELECTRICAL EQUIPMENT.
9. ALL PIPING TO BE HELD TIGHT TO BOTTOM OF STRUCTURE.
10. OFFSET AND TRANSITION PIPING AS REQUIRED.
11. CONTRACTOR TO COORDINATE ALL INSTALLATIONS WITH OTHER TRADES.
12. ALL FIRE PROTECTION PIPING TO BE SIZED BY FIRE PROTECTION CONTRACTOR.
13. ALL SANITARY WASTE, ROOF DRAINS, AND OVERFLOW DRAINS 2-1/2" AND SMALLER TO BE SLOPED AT 1/4" PER LINEAR FOOT. PIPES 3" AND LARGER TO BE SLOPED AT 1/8" PER LINEAR FOOT.
14. WHERE INDIVIDUAL OUTLET PIPING SIZE IS NOT SHOWN, SEE PLUMBING SCHEDULE SIZE.
15. DO NOT ROUTE OR LOCATE ANY PLUMBING PIPE OR EQUIPMENT OVER ANY ELECTRICAL EQUIPMENT.
16. NO PIPE TO BE RUN OVER ANY ELECTRICAL OR COMMUNICATION ROOMS.
17. CONTRACTOR SHALL PROVIDE ALL INCIDENTAL OFFSETS REQUIRED FOR COMPLETE OPERATIONAL MECHANICAL SYSTEM.
18. ALL WATER CONNECTIONS TO SINKS, LAVS AND CLOSETS SHALL BE MADE WITH A 1/2" CONNECTION UNLESS OTHERWISE NOTED.

KEYED NOTES

1 CONNECT NEW 4" WASTE PIPING TO NEAREST EXISTING 4" WASTE. VERIFY EXISTING CONDITIONS

2 EXISTING ROOF DRAIN AND OVERFLOW ROUTING TO REMAIN. VERIFY EXISTING CONDITIONS.

3 EXISTING WATER HEATER RELOCATED TO NEW JANITOR CLOSET.

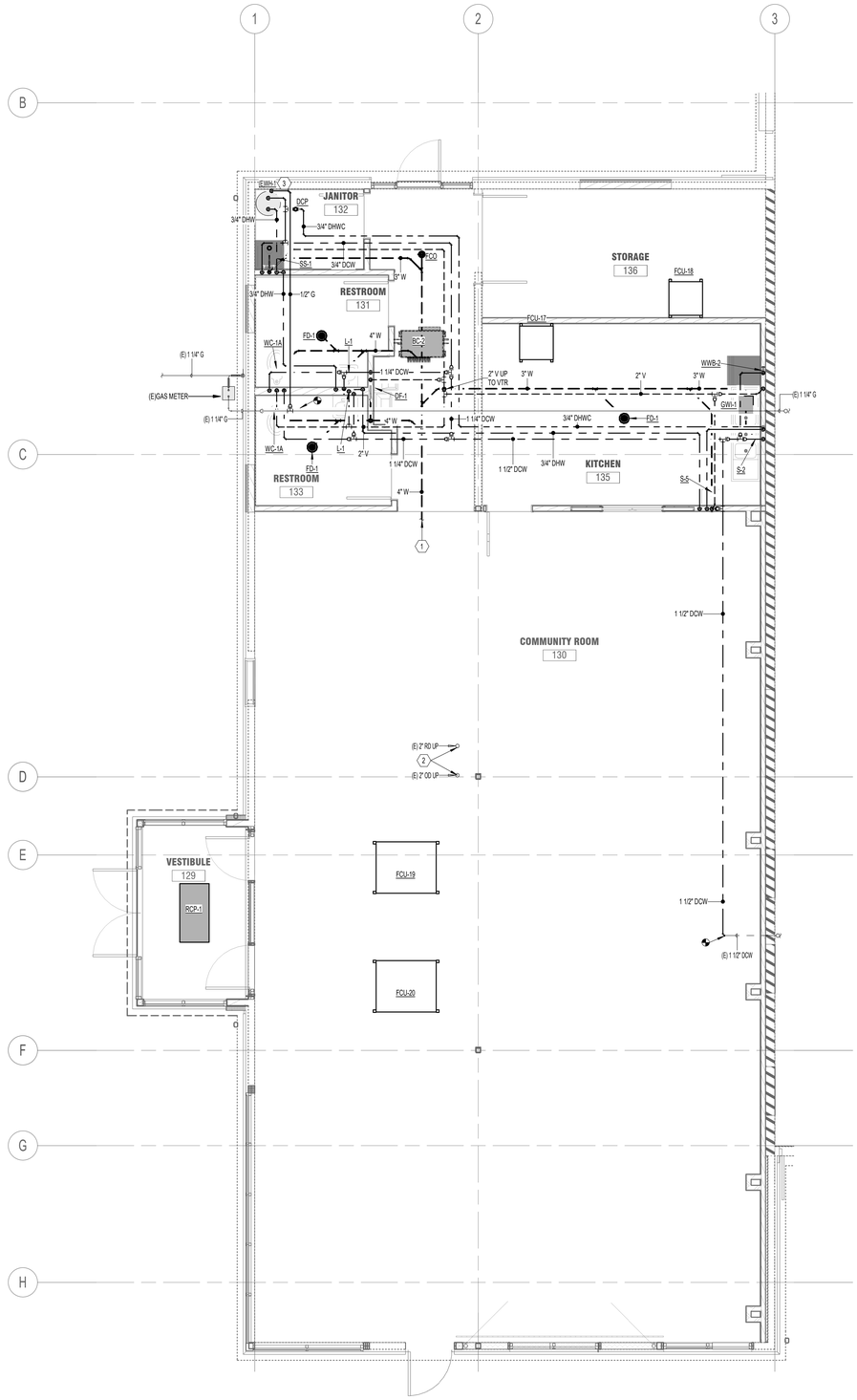

1 ENLARGED PLUMBING PLAN - REMODEL AREA

SCALE: 1/4" = 1'-0"

Babcock Design

Salt Lake City
52 Exchange Place
Salt Lake City, UT 84111
801.531.1144

Boise
800 W Main Street, Suite 940
Boise, ID 83702
208.424.7675

babcock**design**.com

Consultant

COLVIN ENGINEERING ASSOCIATES
505 East South Temple, Ste 100
Salt Lake City, Utah 84102-1004
Phone 801.322.2400
colvinengineering.com

CITY OF ALPINE

ALPINE FIRE STATION

50 E 100 N ALPINE, UT 84004

Revisions

Num.	Description	Date

Project Number	25116
Original Issue	04.16.2026
Project Status	CONSTRUCTION DOCUMENTS

The information and content represented herein is considered by law the architect's instruments of service and are the property of Babcock Design. They are available for limited review and evaluation by clients, consultants, contractors, government agencies, vendors, and office personnel only in accordance with this notice. They are intended for use only for the project specified and are to be used for no other purpose or location without the written permission of Babcock Design. Unauthorized use, sale, or transfer, or any reproduced, photographed, modified, published, uploaded, transmitted, disclosed, sold, distributed to others in any way including in digital form, or otherwise used without the prior written consent of Babcock Design.

COPYRIGHT © 2025 BABCOCK DESIGN

Stamp

Sheet Title

ENLARGED PLUMBING PLANS

Sheet Number

PL402

Current as of: 4/16/2026 2:51:02 PM

Original drawing is 30" x 42" Autodesk Docs://25116 - ALPINE FIRE STATION 202/MECH.2025.095.00.Alpine Fire Station 202 V25.rvt

Copyright (C) 2025 by Colvin Engineering Associates, Inc. Salt Lake City, Utah. All rights reserved. Unauthorized copying and/or use is illegal and subject to prosecution.

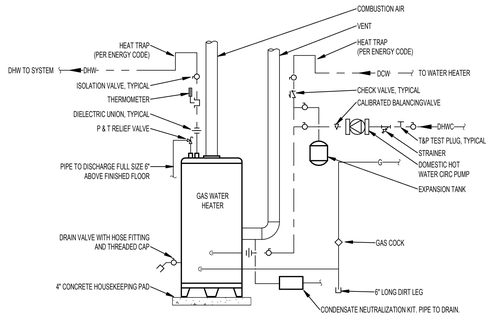

8 WATER HEATER PIPING (NG, CONDENSING, FLOOR MOUNTED)
SCALE: NONE

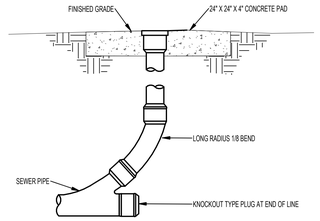

7 CLEANOUT - GRADE
SCALE: NONE

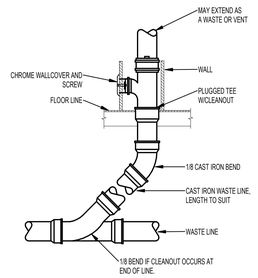

6 CLEANOUT - WALL
SCALE: NONE

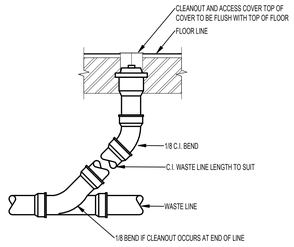

5 CLEANOUT - FLOOR
SCALE: NONE

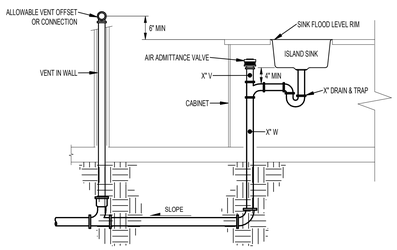

4 ISLAND SINK AIR ADMITTANCE VENT
SCALE: NONE

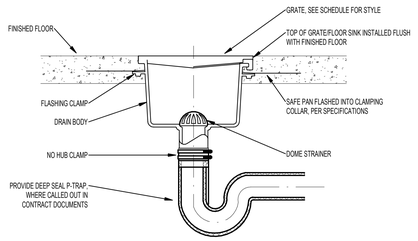

3 FLOOR SINK - SUSPENDED SLAB
SCALE: NONE

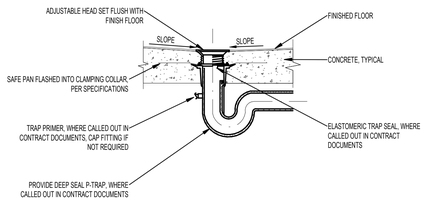

2 FLOOR DRAIN - SUSPENDED SLAB
SCALE: NONE

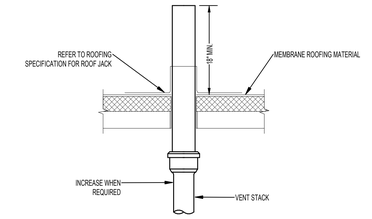

1 VENT THROUGH ROOF
SCALE: NONE

Babcock Design

Salt Lake City
52 Exchange Place
Salt Lake City, UT 84111
801.531.1144

Boise
800 W Main Street, Suite 940
Boise, ID 83702
208.424.7675

babcock**design**.com

Consultant

COLVIN ENGINEERING ASSOCIATES
505 East South Temple, Ste 100
Salt Lake City, Utah 84102-1004
Phone 801.322.2400
colvinengineering.com

CITY OF ALPINE

ALPINE FIRE STATION

50 E 100 N ALPINE, UT 84004

Revisions

Num.	Description	Date

Project Number	25116
Original Issue	04.16.2026
Project Status	CONSTRUCTION DOCUMENTS

The information and content represented herein is considered by law the architect's instruments of service and are the property of Babcock Design. They are available for limited review and evaluation by clients, contractors, and public officials in connection with this project. Unauthorized use is prohibited by law and by this notice. They are intended for use only for the project specified and are to be used for no other purpose or project including additions to or modification of the completed project. No part thereof may be copied, reproduced, photographed, modified, published, uploaded, transmitted, disclosed, sold, distributed to others in any way including in digital form, or otherwise used without the prior written consent of Babcock Design.

COPYRIGHT © 2025 BABCOCK DESIGN

Stamp

Sheet Title

PLUMBING DETAILS

Sheet Number

PL501

Original drawing is 30" x 42" Autodesk Docs://25116 - ALPINE FIRE STATION 2026/MECH.2025.065.00.Alpine Fire Station 2026 V25.rvt

GAS WATER HEATER SCHEDULE (GWH)

PLAN CODE	INPUT (BTU/HR)	THERMAL EFFICIENCY	STORAGE CAPACITY (GAL)	HEATER RECOVERY (100°F RISE)	1ST HOUR RATING	3-HR AVE	STORAGE TEMP	MAX DIMENSIONS		ELECTRICAL POWER	OPERATING WEIGHT (LBS)	MANUFACTURER & MODEL NO	REMARKS
								DIAMETER (IN)	HEIGHT (IN)				
GWH-1	500,000	95%	119	576	659		140	33.25	75.75	120V - 60Hz	1842	A.O. SMITH BTH-500(A)	ALL

1. PROVIDE WITH UPPER AND LOWER SEISMIC STRAPS WITH TWO 5/16" LAG SCREWS HAVING 2" OF EMBED AT EACH CONNECTION LOCATION
2. PROVIDE DCP-1 OR EQUIVALENT CIRCULATION PUMP
3. PROVIDE WITH ET-1 OR EQUIVALENT EXPANSION TANK
4. PROVIDE WITH CONCENTRIC VENT KIT

DOMESTIC CIRCULATION PUMP SCHEDULE (DCP)

PLAN CODE	TYPE	FLOW (GPM)	HEAD (FT)	FLUID TEMP (°F)	MOTOR			TOTAL WEIGHT (LBS)	MANUFACTURER & MODEL NO.	REMARKS
					RPM	SIZE (HP)	VOLT/PH			
DCP-1	INLINE CIRCULATOR	2.4	30	110	3725	0.09	115/1	15	BELL&GOSSET ECOCIRC	ALL

1. BALANCE DOMESTIC HOT WATER CIRCULATION LINE. PROVIDE BALANCING VALVE. PROVIDE P&T PORT ON INLET AND DISCHARGE OF PUMP
2. PROVIDE WITH BRONZE, PLASTIC OR STAINLESS STEEL IMPELLER AND STAINLESS STEEL BODY
3. PROVIDE WITH PROTECTION AGAINST DRY-RUN CONDITION
4. PROVIDE WITH CHECK-TROL ISOLATION FLOW CONTROL FLANGE
5. PROVIDE WITH AQUASTAT. REFER ALSO TO SPEC 230900 § 3.6_G_1 FOR SEQUENCE OF OPERATION

EXPANSION TANK SCHEDULE (ET)

PLAN CODE	WATER TEMP °F	TANK VOLUME (GAL)	MAX DIMENSIONS		OPERATING WEIGHT (LBS)	MANUFACTURER & MODEL NO.
			DIA (IN)	HIGHT (IN)		
ET-1	140	2.3	10	14	22	BELL & GOSSETT PTA-5

GREASE INTERCEPTOR SCHEDULE (GWI)

PLAN CODE	FLOW RANGE	GREASE LBS	INLET/ OUTLET	MAX. DIMENSIONS (FT.)	MANUFACTURER & MODEL NO.	REMARKS
GWI-1	10 GPM	20	3"	14 1/2"W X 16 5/8"L X 11 7/8"H	JOSAM 60103H	-

PLUMBING FIXTURE SCHEDULE

PLAN CODE	DESCRIPTION	ROUGH IN SIZE				MANUFACTURER & MODEL NO.	REMARKS
		CW	HW	WASTE	VENT		
WC-1A	ADA WATER CLOSET FLOOR MOUNT / FLUSH VALVE	1	—	4	2	TOILET: AMERICAN STANDARD 'MADERA' 3043001.020 FLUSH VALVE: AMERICAN STANDARD 6047.161.002	FLOOR MOUNTED, VITREOUS CHINA, WHITE,16.5" RIM HEIGHT ADA COMPLIANT, TOP SPUD, FLUSHOMETER, 1.6 GPF SEAT: HEAVY DUTY OPEN FRONT LESS COVER WITH EVERCLEAN® SURFACE & SELF-SUSTAINING HINGES 5901100SS.020
WC-1	WATER CLOSET FLOOR MOUNT / FLUSH VALVE	1	—	4	2	TOILET: AMERICAN STANDARD 'MADERA' 2234001.020 FLUSH VALVE: AMERICAN STANDARD 6047.161.002	FLOOR MOUNTED , VITREOUS CHINA. WHITE, FLUSHOMETER, 1.6 GPF SEAT: HEAVY DUTY OPEN FRONT LESS COVER WITH EVERCLEAN® SURFACE & SELF-SUSTAINING HINGES 5901100SS.020
L-1	LAVATORY WALL MOUNT	1/2	1/2	2	1-1/2	AMERICAN STANDARD DECORUM 9024.004EC FAUCET: AMERICAN STANDARD KENRIDGE 1037032950 PROVIDE WITH ASSE 1070 THERMOSTATIC MIXING VALVE	WALL MOUNT, RECTANGULAR LAVATORY, VITREOUS CHINA, 4" CENTER-SET, FAUCET WITH BRUSHED NICKEL FINISH, 1.2 GPM
L-2	LAVATORY UNDERMOUNT	1/2	1/2	2	1-1/2	AMERICAN STANDARD STUDIO 0614.300 FAUCET AMERICAN STANDARD COLONY PRO 7078.202 PROVIDE WITH ASSE 1070 THERMOSTATIC MIXING VALVE	RECTANGULAR UNDER COUNTER MOUNT SINK, VITREOUS CHINA, CHROME FAUCET WITH POP-UP DRAIN 1.2 GPM
SH-1	SHOWER	1/2	1/2	2	1-1/2	AMERICAN STANDARD SPECTRA VERSA 1029120000 PROVIDE WITH ASSE 1070 THERMOSTATIC MIXING VALVE	SHOWER SYSTEM KIT, SHOWER HEAD AND HAND SHOWER, 1.8 GPM
S-1	KITCHEN SINK	1/2	1/2	2	1-1/2	BOWL: AMERICAN STANDARD VAULT K-25939 FAUCET: DELTA 9659-DST PROVIDE WITH ASSE 1070 THERMOSTATIC MIXING VALVE	UNDERMOUNT SINK, SINGLE COMPARTMENT, RECTANGULAR, STAINLESS STEEL, SINGLE HANDLE PULL DOWN FAUCET, 1.8 GPM
S-1A	KITCHEN SINK COMMUNITY BUILDG	1/2	1/2	2	1-1/2	BOWL: KOHLER VAULT K-3821 FAUCET: DELTA 9659-DST PROVIDE WITH ASSE 1070 THERMOSTATIC MIXING VALVE	UNDERMOUNT SINK, SINGLE COMPARTMENT, RECTANGULAR, STAINLESS STEEL, SINGLE HANDLE PULL DOWN FAUCET, 1.8 GPM
GD-1	GARBAGE DISPOSAL	—	—	2	—	INSINKERATOR BADGER 5XP	120V 3/4 HP. REFER TO ARCHITECTURAL PLANS
S-2	3 COMPARTMENT SINK	1/2	1/2	2	1-1/2	ADVANCE TABCO REGALINE SINK, STANDARD 93-3-54-18RL FAUCET: ADVANCE TABCO K-116 PROVIDE WITH ASSE 1070 THERMOSTATIC MIXING VALVE	THREE COMPARTMENT 2 DRAINBOARDS 91" LENGTH, STAINLESS STEEL, WALL MOUNT PRE-RINSE FAUCET
S-3	LAUNDRY SINK	1/2	1/2	3	1-1/2	ELKAY WELDBILT WNSF8124 FAUCET: AMERICAN STANDARD 8344.012 PROVIDE WITH ASSE 1070 THERMOSTATIC MIXING VALVE	SINGLE COMPARTMENT FREE STANDING UTILITY SINK, STAINLESS STEEL, WALL-MOUNTED FAUCET WITH TOP BRACE, CHROME FINISH, VACUUM BREAKER
S-4	DECON SINK	1/2	1/2	2	1-1/2	ELKAY ESS4924RW6C PROVIDE WITH ASSE 1070 THERMOSTATIC MIXING VALVE	WALL MOUNTED, SINGLE BOWL, STAINLESS STEEL SERVICE SINK. INCLUDES FAUCET - LK940GN06T6H AND DRAIN - LK18B. 1.5 GPM
	KITCHEN HAND WASH SINK	1/2	1/2	2	1-1/2	ELKAY CHS1716C PROVIDE WITH ASSE 1070 THERMOSTATIC MIXING VALVE	WALL HUNG, SINGLE BOWL, STAINLESS STEEL SINK KIT
SS-1	MOP SINK	1/2	1/2	3	1-1/2	PROFLO PFMB3624S FAUCET: CHICAGO FAUCET 897-PMRCF	36X24X10 MOP SINK BASIN, MOLDED HIGH DENSITY COMPOSITE BASIN, WALL-MOUNTED FAUCET WITH TOP BRACE, CHROME FINISH, INTEGRAL SUPPLY STOPS AND, VACUUM BREAKER.
DF-1	DRINKING FOUNTAIN	1/2	—	2	1-1/2	ELKAY #LZSTL8WSSP-PF BOTTLE FILLER #EZWSR	WALL MOUNT BI-LEVEL, ADA, BOTTLE FILLER WATER COOLER, STAINLESS STEEL, CHILLING CAPACITY OF 8.0 GPH, POWER: 115V/60Hz
IMB-1	ICE MAKER WALL BOX	1/2	—	—	—	—	GUY GRAY MIB3AB
WWB-1	WASHER WALL BOX	1/2	1/2	2	—	OATEY QUADTRO 38330	WASHING MACHINE OUTLET BOX, QUARTER TURN, VIEGA PROPRESS CONNECTION, NO HAMMER STANDARD PACK
WWB-2	DISHWASHER WALL BOX	1/2	—	2	—	OATEY MODA 37904	DISHWASHER OUTLET BOX STANDARD PACK
SC-1	SILL COCK	3/4	—	—	—	WOODFORD MODEL B65	FREEZELESS, ANTI-SIPHON SILL COCK WITH AUTOMATIC DRAINING. CHROME FINISHED BOX AND DOOR.
FD-1	FLOOR DRAIN	—	—	2	1 1/2	J.R. SMITH MANUFACTURING COMPANY FIG. 2005Y-NB-U-M. DUCO CAST IRON FLOOR DRAIN	SEE PLANS FOR OUTLET SIZE. STRAINER GRATE MUST BE HEEL PROOF. PROVIDE WITH DEEP SEAL TRAP GUARD, OR EQUAL.
FS-1	FLOOR SINK	—	—	2	1 1/2	J.R. SMITH MANUFACTURING COMPANY FIG. 3150-Y-ASB SQUARE FLOOR SINK	FLOOR SINK SHALL BE OF CAST IRON CONSTRUCTION WITH ENAMEL INTERIOR FINISH, MINIMUM INTERIOR DIMENSIONS OF 12"x12"xH"D. PROVIDE WITH NICKEL BRONZE GRATE AND DEEP SEAL P-TRAP. OR EQUAL.
WCO FCO COTG	WALL CLEANOUT FLOOR CLEANOUT CLEANOUT TO GRADE	—	—	SEE PLANS	—	ZURN Z1441 ZURN Z1400 ZURN Z1400-B	—

Copyright (C) 2025 by Colvin Engineering Associates, Inc. Salt Lake City, Utah. All rights reserved. Unauthorized copying and/or use is illegal and subject to prosecution.

Current as of: 4/16/2026 11:43:07 PM

Original drawing is 30" x 42" Autodesk Docs://25116 - ALPINE FIRE STATION 2026/MECH.2025.095.00.Alpine Fire Station 2026 V25.rvt

Babcock Design

Salt Lake City
52 Exchange Place
Salt Lake City, UT 84111
801.531.1144

Boise
800 W Main Street, Suite 940
Boise, ID 83702
208.424.7675

babcockdesign.com

Consultant

COLVIN ENGINEERING ASSOCIATES
505 East South Temple, Ste 100
Salt Lake City, Utah 84102-1004
Phone 801.322.2400
colvinengineering.com

CITY OF ALPINE

ALPINE FIRE STATION

50 E 100 N ALPINE, UT 84004

Revisions

Num.	Description	Date

Project Number	25116
Original Issue	04.16.2026
Project Status	CONSTRUCTION DOCUMENTS

The information and content represented herein is considered by law the architect's instruments of service and are the property of Babcock Design. They are available for limited review and evaluation by clients, governmental agencies, and contractors for bidding or construction purposes on this project only. Any use of this notice. They are intended for use only for the project specified and are to be used for no other purpose or project including additions to or modification of the completed project. No part thereof may be copied, reproduced, photographed, modified, published, uploaded, transmitted, disclosed, sold, distributed to others in any way including in digital form, or otherwise used without the prior written consent of Babcock Design.

COPYRIGHT © 2025 BABCOCK DESIGN

Stamp

Sheet Title

PLUMBING SCHEDULES

Sheet Number

PL601

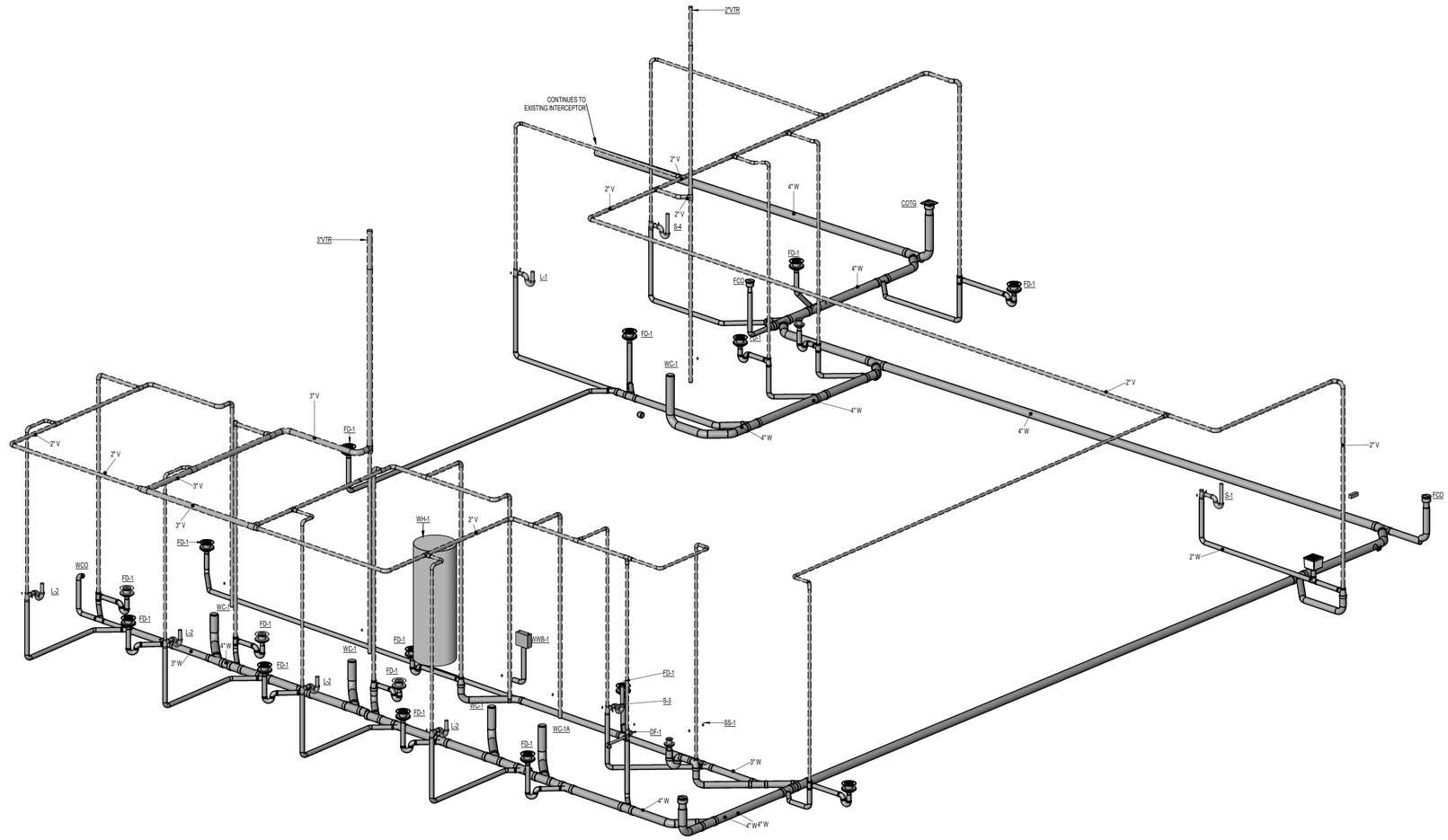

1 WASTE AND VENT ISOMETRIC - NEW ADDITION

SCALE: NONE

Babcock Design

Salt Lake City
52 Exchange Place
Salt Lake City, UT 84111
801.531.1144

Boise
800 W Main Street, Suite 940
Boise, ID 83702
208.424.7675

babcock**design**.com

Consultant

COLVIN ENGINEERING ASSOCIATES
505 East South Temple, Ste 100
Salt Lake City, Utah 84102-1004
Phone 801.322.2400
colvinengineering.com

CITY OF ALPINE

ALPINE FIRE STATION

50 E 100 N ALPINE, UT 84004

Revisions

Num.	Description	Date

Project Number	25116
Original Issue	04.16.2026
Project Status	CONSTRUCTION DOCUMENTS

The information and content represented herein is considered by law the architect's instruments of service and are the property of Babcock Design. They are available for limited review and evaluation by clients, consultants, contractors, government agencies, vendors, and office personnel only in accordance with this notice. They are intended for use only for the project specified and are to be used for no other purpose or project including additions to or modification of the completed project. No part thereof may be copied, reproduced, photographed, modified, published, uploaded, transmitted, disclosed, sold, distributed to others in any way including in digital form, or otherwise used without the prior written consent of Babcock Design.

COPYRIGHT © 2025 BABCOCK DESIGN

Stamp

Sheet Title

PLUMBING ISOMETRICS

Sheet Number

PL801

Copyright (C) 2025 by Colvin Engineering Associates, Inc. Salt Lake City, Utah. All rights reserved. Unauthorized copying and/or use is illegal and subject to prosecution.

Current as of: 4/16/2026 1:21:04 PM

Original drawing is 30" x 42" Autodesk Docs://25116 - ALPINE FIRE STATION 202/MECH 2025.095.00 Alpine Fire Station 202.V25.rvt

LIGHTING SYMBOLS

1. LIGHT FIXTURE SYMBOLS ARE GENERAL IN NATURE AND MAY BE SHOWN ON THE DRAWINGS IN VARIOUS SIZES AND SHAPES. REFER TO THE LIGHT FIXTURE SCHEDULE FOR SPECIFICATION INFORMATION.
2. ARROWS INDICATE AIMING DIRECTION.

SYMBOL	DESCRIPTION	MOUNTING	REMARKS
	ARM-MOUNTED SINGLE-HEAD LIGHT FIXTURE AND POLE	AS SPECIFIED OR DETAILED	
	ARM-MOUNTED DOUBLE-HEAD LIGHT FIXTURE AND POLE	AS SPECIFIED OR DETAILED	
	POST-TOP SINGLE-HEAD, LIGHT FIXTURE AND POLE	AS SPECIFIED OR DETAILED	
	WALL-MOUNTED FIXTURE	AS SPECIFIED OR DETAILED	REFER TO ARCHITECTURAL EXTERIOR ELEVATIONS FOR MOUNTING HEIGHT
	LIGHT BOLLARD	AS SPECIFIED OR DETAILED	
	FLOOD LIGHT	AS SPECIFIED OR DETAILED	
	RECESSED WALL FIXTURE OR STEP LIGHT	AS SPECIFIED OR DETAILED	REFER TO ARCHITECTURAL EXTERIOR ELEVATIONS FOR MOUNTING HEIGHT
	LIGHT FIXTURES	AS SPECIFIED OR DETAILED	
	WALL-MOUNTED LINEAR LIGHT FIXTURE	AS SPECIFIED OR DETAILED	
	LINEAR WALL WASHER	AS SPECIFIED OR DETAILED	
	RECESSED DOWN LIGHT	AS SPECIFIED OR DETAILED	
	RECESSED WALL-WASHER OR DIRECTIONAL DOWNLIGHT	AS SPECIFIED OR DETAILED	
	SURFACE OR PENDANT-MOUNTED LIGHT FIXTURE	AS SPECIFIED OR DETAILED	
	TRACK OR MONO-POINT LIGHT FIXTURE	AS SPECIFIED OR DETAILED	
	WALL SCONCE	AS SPECIFIED OR DETAILED	
	LINEAR PENDANT LIGHT FIXTURE	CEILING	
	EGRESS LIGHT FIXTURE	AS SPECIFIED OR DETAILED	THIS IS AN EXAMPLE OF AN EGRESS LIGHT FIXTURE. EGRESS LIGHT FIXTURES ARE HALF-SHADED DIAGONALLY
	EMERGENCY (NON-EGRESS) LIGHT FIXTURE	AS SPECIFIED OR DETAILED	THIS IS AN EXAMPLE OF AN EMERGENCY (NON-EGRESS) LIGHT FIXTURE. EMERGENCY FIXTURES ARE FULLY-SHADED.
	CEILING MOUNTED EXIT SIGN	CEILING	DARKENED PORTION OF SIGN INDICATES FACE(S); ARROW(S) INDICATE CHEVRON DIRECTION(S)
	WALL-MOUNTED EXIT SIGN	WALL ABOVE DOOR	
	WALL-MOUNTED EXIT SIGN W/ EMERGENCY LIGHT FIXTURE	WALL ABOVE DOOR	
IN	CEILING MOUNTED IN USE SIGN	CEILING	
IN	WALL-MOUNTED IN USE SIGN	WALL ABOVE DOOR	
TC	TIME CLOCK		
	EMERGENCY LIGHT FIXTURE	AS NOTED	
P	ELECTRIC PHOTOCELL	N/A	MOUNT ON ROOF FACING NORTH SKY
XXXX	LIGHT FIXTURE CALLOUT (LETTER DENOTES FIXTURE TYPE)		

FIRE ALARM SYMBOLS

SYMBOL	DESCRIPTION	MOUNTING	REMARKS
T	BEAM DETECTOR - TRANSMITTER	4" BELOW CEILING TO TOP OF DETECTOR	
R	BEAM DETECTOR - RECEIVER	4" BELOW CEILING TO TOP OF DETECTOR	
EOL	END OF LINE RESISTOR	PER MANUF. REC.	
T	TAMPER SWITCH	AT VALVE	
W	WATER FLOW INDICATOR	ON FIRE RISER	
FSD	FIRE/SMOKE DAMPER		
X	HEAT DETECTOR	CEILING	SUBSCRIPT INDICATES SPECIFIC REQUIREMENTS/OPTIONS: 'SB' DEVICE WITH SOUNDER BASE 'R' DEVICE WITH ADDRESSABLE RELAY 'RES' DEVICE HAS 120V. SMOKE ALARM W/BATTERY BACKUP
CO X	CARBON MONOXIDE DETECTOR		
X	SMOKE DETECTOR		
X	HEAT DETECTOR	WALL MOUNTED: MAX 12" FROM BOTTOM OF CEILING	
CO X	CARBON MONOXIDE DETECTOR		
X	SMOKE DETECTOR		
D	DUCT SMOKE DETECTOR	SIDE OF DUCT	
F	FIRE ALARM MANUAL STATION		
Z	CONTROL MODULE	AT DEVICE(S) TO BE CONTROLLED	
I	MONITOR MODULE	AT DEVICE(S) TO MONITOR	
R	FAN SHUTDOWN RELAY	AT CONTROL PANEL	
D	MAGNETIC DOOR HOLDER	COORDINATE WITH DOOR INSTALLER	COORDINATE WITH DOOR INSTALLER; SUBSCRIPT 'F' INDICATES TO MOUNT AT FLOOR LEVEL
WF	WATER FLOOD CONTROL	FLOOR	
H	AUDIO HORN	INDOOR - REFER TO TYPICAL ADA AND EQUIPMENT MOUNTING HEIGHT DETAIL. OUTDOOR - 120" FROM FINISH FLOOR TO LENS.	SUBSCRIPT 'WP' INDICATES THAT A WEATHER PROOF BACK BOX IS REQ. NUMERIC SUBSCRIPT INDICATES CANDELA RATING OF STROBE (I.E. - 15, 75, 110)
	FIRE ALARM VISUAL STROBE		
	FIRE ALARM AUDIO/VISUAL HORN/STROBE		
	CEILING MOUNTED FIRE ALARM AUDIO/VISUAL HORN/STROBE		
S	FIRE ALARM AUDIO SPEAKER		
S	CEILING MOUNTED FIRE ALARM AUDIO SPEAKER		
	FIRE ALARM AUDIO/VISUAL SPEAKER/STROBE		
F	FIRE FIGHTERS TELEPHONE JACK	+48"	
	FIRE PROTECTION SPRINKLER RISER BELL	+90"	FURNISHED BY FIRE PROTECTION CONTRACTOR AND INSTALLED AND CONNECTED BY DIV. 26
FACP	FIRE ALARM CONTROL PANEL		
ASD	ASD CONTROL PANEL		

TELEPHONE / DATA SYMBOLS

SYMBOL	DESCRIPTION	MOUNTING	REMARKS
	TELEPHONE OUTLET	+18"	
	DATA OUTLET	+18"	
	COMBINATION TELEPHONE/DATA OUTLET	+18"	
	TELEPHONE TERMINAL BOARD	TOP AT 72"	
	WIRELESS ACCESS POINT	CEILING	
W	WIRELESS ACCESS POINT	SEE PLANS	
	EMERGENCY PHONE	SEE PLANS	

VIDEO SURVEILLANCE SYMBOLS

SYMBOL	DESCRIPTION	MOUNTING	REMARKS
	BULLET STYLE VIDEO SURVEILLANCE CAMERA	SEE PLANS	SUBSCRIPT DENOTES DEGREES OF MONITORED AREA
	BULLET STYLE VIDEO SURVEILLANCE CAMERA	WALL	
	DOME STYLE VIDEO SURVEILLANCE CAMERA	SEE PLANS	
	DOME STYLE VIDEO SURVEILLANCE CAMERA	WALL	

WIRING DEVICE SYMBOLS

SYMBOL	DESCRIPTION	MOUNTING	REMARKS
	SPLIT-WIRED DUPLEX RECEPTACLE	+18"	
	SIMPLEX RECEPTACLE	+18"	
	DUPLEX RECEPTACLE	+18"	
	FOURPLEX RECEPTACLE	+18"	
	125/250V RECEPTACLE	+18"	RANGE -- NEMA 14-50R DRYER -- NEMA 14-30R
	GROUND FAULT CIRCUIT INTERRUPTER DUPLEX RECEPTACLE	+18"	
	GROUND FAULT CIRCUIT INTERRUPTER FOURPLEX RECEPTACLE	+18"	
	EMERGENCY DUPLEX RECEPTACLE	+18"	
	EMERGENCY FOURPLEX RECEPTACLE	+18"	
	DUPLEX RECEPTACLE W/(2) 3.1A, 5VDC USB PORTS	+18"	
J	MULTI-OUTLET ASSEMBLY	4" ABOVE BACKSPLASH	
	POWER / TELEPHONE POLE	FLOOR/CEILING	
(4-PLEX)	CORD DROP	REFER TO FLOOR PLANS	REFER TO DETAIL. REFER TO PLANS.
(4-PLEX)	CORD REEL	REFER TO FLOOR PLANS	REFER TO DETAIL. REFER TO PLANS.
(5-20R)	SPECIAL PURPOSE OUTLET	+18"	SUBSCRIPT IN PARENTHESIS INDICATES NEMA CONFIGURATION IF SHOWN. REFER TO DRAWINGS AND/OR EQUIPMENT SCHEDULES. CONFIRM EXACT CONFIGURATION WITH OWNER PRIOR TO INSTALLATION.

LIGHTING CONTROLS

SYMBOL	DESCRIPTION	MOUNTING	REMARKS
$	SINGLE-POLE TOGGLE SWITCH	+48"	
$^a	SINGLE-POLE TOGGLE SWITCH	+48"	"a" LOWER CASE LETTER SPECIFIES ZONE
$_3	THREE-WAY TOGGLE SWITCH	+48"	
$_4	FOUR-WAY TOGGLE SWITCH	+48"	
$_K	KEY-OPERATED SINGLE-POLE TOGGLE SWITCH	+48"	
$_P	SINGLE-POLE TOGGLE SWITCH WITH PILOT LIGHT	+48"	
$_DIM	DIMMER SWITCH	+48"	RATE DIMMER SWITCH FOR MAXIMUM POSSIBLE WATTAGE
$_TIM	TIMER SWITCH	+48"	
$_OS	OCCUPANCY SENSOR WALL SWITCH	+48"	
$^D_OS	OCCUPANCY SENSOR WALL SWITCH WITH DIMMING	+48"	
$^XYZ_LV#	LOW VOLTAGE SWITCH	+48"	REFER TO SWITCH DETAILS FOR MORE INFORMATION "#" SPECIFIES TYPE
$_3PM	3-POSITION MOMENTARY CONTACT SWITCH	+48"	REFER TO DETAIL UP-ON; CENTER-NEUTRAL; DOWN-OFF
$_3PN	3-POSITION MAINTAINED CONTACT SWITCH	+48"	UP-ON; CENTER-OFF; DOWN-ON
a	OCCUPANCY SENSOR	CEILING	"a" LOWER CASE SPECIFIES ZONE
a	WALL MOUNTED OCCUPANCY SENSOR	+48"	"a" LOWER CASE SPECIFIES ZONE
	DAYLIGHT SENSOR	CEILING	"a" LOWER CASE LETTER SPECIFIES ZONE
$^CP#_LV#K	LOW-VOLTAGE SWITCH CONNECTED TO LIGHTING CONTROL PANEL	+48"	CP# REPRESENTS LIGHTING CONTROL PANEL IDENTIFIER LV# SPECIFIES TYPE K INDICATES KEYED SWITCH REFER TO SWITCH DETAILS FOR MORE INFORMATION
CP#	OCCUPANCY SENSOR CONNECTED TO LIGHTING CONTROL PANEL	CEILING	CP# REPRESENTS LIGHTING CONTROL PANEL IDENTIFIER
CP#	DAYLIGHT SENSOR CONNECTED TO LIGHTING CONTROL PANEL	CEILING	CP# REPRESENTS LIGHTING CONTROL PANEL IDENTIFIER
LC.OO	LIGHTING CONTROL SEQUENCE OF OPERATIONS IDENTIFIER		REFER TO SEQUENCE OF OPERATIONS SCHEDULE FOR ADDITIONAL INFORMATION
PDLZ	PRIMARY DAYLIGHT ZONE		
SDLZ	SECONDARY DAYLIGHT ZONE		

BRANCH CIRCUITING SYMBOLS

SYMBOL	DESCRIPTION	REMARKS
	BRANCH CIRCUIT HOME RUN TO PANEL	ARROWS: NUMBER OF ARROWS INDICATES NUMBER OF CIRCUITS REQUIRED.
	BRANCH CIRCUITING (U.N.O.) CONTINUATION	
	CONDUIT STUB-IN	CAP AND MARK
	INCOMING SERVICE	
	UNDERGROUND FEEDER	
J	JUNCTION BOX	MOUNT AS NOTED. SUBSCRIPT 'F' INDICATES TO PROVIDE A FLOOR BOX WITH BLANK COVERPLATE.
	BRANCH CIRCUITING (U.N.O.) TURNED UP OR TOWARDS OBSERVER.	
	BRANCH CIRCUITING (U.N.O.) TURNED DOWN OR AWAY FROM OBSERVER.	
	2 CIRCUIT, BRANCH CIRCUIT HOME RUN TO PANEL	ARROWS: NUMBER OF ARROWS INDICATES NUMBER OF CIRCUITS REQUIRED.
	3 CIRCUIT, 4 WIRE BRANCH CIRCUIT HOME RUN TO PANEL	ARROWS: NUMBER OF ARROWS INDICATES NUMBER OF CIRCUITS REQUIRED.

ACCESS CONTROL SYMBOLS

SYMBOL	DESCRIPTION	MOUNTING	REMARKS
REX	REQUEST-TO-EXIT MOTION DETECTOR	CEILING	
S	ELECTROMAGNETIC DOOR STRIKE	DOOR	
SS	SEISMIC SENSOR	DOOR	
D	MAGNETIC DOOR CONTACT SWITCH	DOOR	
M	MAGNETIC LOCK	DOOR	
OHS	OVERHEAD SECURITY	DOOR	
OHD	OVERHEAD DOOR CONTACT	DOOR	
EH	ELECTRIFIED HINGE	DOOR	
EL	ELECTRIFIED LEVER	DOOR	
EP	ELECTRIFIED PANIC HARDWARE	DOOR	
G	GLASS BREAK HARDWARE	CEILING/WALL	
PS	POWER SUPPLY	CEILING/WALL	
IL	INTEGRATED LOCK	+46"	
PP	PUSH PLATE FOR AUTOMATIC DOOR OPERATOR	+46"	
ADO	AUTOMATIC DOOR OPERATOR	DOOR	
KP	KEYPAD	+48"	
CK	CARD READER / KEYPAD	+48"	
MK	MAGNETIC STRIP CARD READER / KEYPAD	+48"	
CR	CARD READER	+48"	
MR	MAGNETIC STRIP CARD READER	+48"	

GENERAL SYMBOLS

SYMBOL	DESCRIPTION	REMARKS
XX	KEYED NOTE	
1 / E-1	DETAIL REFERENCE	TOP NUMBER INDICATES DETAIL NUMBER; BOTTOM LETTER-NUMBER INDICATES DRAWING SHEET WHERE DETAIL IS SHOWN; WHERE NOT SPECIFICALLY REFERENCED, DETAIL IS GENERAL IN NATURE AND SHALL APPLY WHERE APPLICABLE.
2 / E-2	ELEVATION REFERENCE	TOP NUMBER INDICATES ELEVATION NUMBER; BOTTOM LETTER-NUMBER INDICATES WHERE ELEVATION IS SHOWN.
3 / E-2	SECTION REFERENCE	TOP NUMBER INDICATES ELEVATION NUMBER; BOTTOM LETTER-NUMBER INDICATES WHERE ELEVATION IS SHOWN.
100	ARCHITECTURAL ROOM NUMBER	
AHU / 1	EQUIPMENT NAME / NUMBER	TOP NUMBER ABBREVIATES EQUIPMENT NAME OR TYPE; BOTTOM NUMBER INDICATES EQUIPMENT NUMBER. REFER TO EQUIPMENT SCHEDULE.
1	REVISION NUMBER	USED TO DENOTE CHANGES EITHER ISSUED BY ADDENDUM OR DURING CONSTRUCTION AND TO DENOTE RECORD DRAWING CHANGES.
	REVISION CLOUD	USED TO DENOTE AREAS, DEVICES, EQUIPMENT DETAILS, ETC. AFFECTED BY THE REVISION.
	BREAKLINE	USED TO BREAK DRAWINGS.
LCD-###	LIGHTING CONTROL WIRING DIAGRAM CALLOUT	

ELECTRONIC SYSTEM GENERAL SYMBOLS

SYMBOL	DESCRIPTION	MOUNTING	REMARKS
PANEL NAME	ELECTRONIC SYSTEM PANELBOARD (SURFACE MOUNT)	TOP AT 72"	ELECTRONIC SYSTEMS MAY INCLUDE BUT ARE NOT SPECIFICALLY LIMITED TO, TELEPHONE, DATA, TELEVISION, LIGHTING CONTROL, CLOCKS, FIRE ALARM, ACCESS CONTROL, SECURITY, CCTV, SOUND SYSTEM, NURSE CALL, OR INTERCOM.
PANEL NAME	ELECTRONIC SYSTEM PANELBOARD (FLUSH MOUNT)	TOP AT 72"	
	ELECTRONIC SYSTEM TERMINAL BOARD	TOP AT 72"	
	TWO POST DATA RACK		
	FOUR POST DATA RACK		
	FLOOR MOUNTED DATA CABINET		
	LARGE DATA CABINET		
	WALL MOUNTED DATA CABINET		

EQUIPMENT AND CONTROL SYMBOLS

SYMBOL	DESCRIPTION	MOUNTING	REMARKS
$_T	MANUAL STARTER WITH THERMAL OVERLOAD(S)	AT EQUIPMENT	
	ELECTRIC MOTOR		
	NON-FUSED DISCONNECT SWITCH	+60"	
F	FUSED DISCONNECT SWITCH	+60"	
	CIRCUIT BREAKER AND ENCLOSURE	+60"	
	MAGNETIC STARTER	+60"	
	COMBINATION MAGNETIC STARTER / FUSED DISCONNECT	+60"	
	COMBINATION MAGNETIC STARTER / NON-FUSED DISCONNECT	+60"	
	COMBINATION MAGNETIC STARTER / MOTOR CIRCUIT PROTECTOR (MCP)	+60"	
VFD	COMBINATION VARIABLE FREQUENCY DRIVE / MOTOR CIRCUIT PROTECTOR (MCP)	FLOOR OR WALL AS SPECIFIED	TOP AT +72" IF WALL MOUNTED
	LOW-VOLTAGE SYSTEM CONTROL PANEL	TOP AT +72"	SEE FLOOR PLANS AND RISER DIAGRAMS FOR ADDITIONAL INFORMATION.
	LOAD CENTER (SURFACE-MOUNTED)	TOP AT +72"	14"W X 3"D
	LOAD CENTER (FLUSH-MOUNTED)	TOP AT +72"	14"W X 3"D
	LIGHTING AND APPLIANCE PANELBOARD (SURFACE-MOUNTED)	TOP AT +72"	20"W X 6"D
	LIGHTING AND APPLIANCE PANELBOARD (FLUSH-MOUNTED)	TOP AT +72"	20"W X 6"D
	POWER DISTRIBUTION PANELBOARD	WALL OR RACK MOUNTED	THESE SYMBOLS ARE GENERAL IN NATURE AND MAY VARY IN SIZE AND SHAPE TO SUIT APPLICATION. CROSS HATCHING INDICATES "MAIN PANELBOARD OR SWITCHBOARD" NAME IS INDICATED IN SEMI-QUOTES (I.E. 'L2A', 'MDP')
	SWITCHBOARD	PAD MOUNTED	
T-#	WET TYPE TRANSFORMER	PAD MOUNT	
T-#	DRY TYPE TRANSFORMER	PAD MOUNT	
T-#	DRY TYPE TRANSFORMER	WALL MOUNT	
	METER BASE	TOP AT +72"	
PB	PULL BOX		
	UTILITY POLE		
	OPEN - STOP - CLOSE SWITCH	+60"	FURNISH SWITCH UNLESS FURNISHED BY ANOTHER DIVISION. INSTALL AND CONNECT COMPLETE. REFER TO RELATED SPECIFICATION SECTIONS.
T	HVAC THERMOSTAT	+60"	PROVIDED BY DIVISION 23
	HAND - OFF - AUTO SWITCH	+60"	
GF	GROUND FAULT PROTECTION		
E	ELECTRIC VEHICLE CAR CHARGING STATION	FLOOR	
S	PAD MOUNTED UTILITY SWITCHGEAR		
SE	PAD MOUNTED UTILITY SECTIONALIZER		

TELEVISION SYSTEM SYMBOLS

SYMBOL	DESCRIPTION	MOUNTING	REMARKS
	TELEVISION OUTLET	+18"	
	ANTENNA	ROOF	

LIGHTNING PROTECTION SYMBOLS

SYMBOL	DESCRIPTION	MOUNTING	REMARKS
	UNIVERSAL AIR TERMINAL		
	MECHANICAL TYPE CABLE TO CABLE CONNECTION		
	EXOTHERMIC TYPE CABLE TO CABLE CONNECTION		
	EXOTHERMIC TYPE CABLE TO GROUND ROD CONNECTION		
	BOND TO TYPICAL BODY OF INDUCTANCE		
TR	THRU-ROOF PENETRATION		

ELECTRICAL SYMBOL SCHEDULE GENERAL NOTES

1. MOUNT ALL OUTLETS, DEVICES, AND EQUIPMENT AT HEIGHTS INDICATED BELOW, UNLESS NOTED OTHERWISE ON THE DRAWINGS. UNLESS NOTED OTHERWISE, HEIGHTS ARE GIVEN FROM FINISHED FLOOR TO CENTER OF OUTLET BOX.
2. WHERE OUTLETS, DEVICES, AND EQUIPMENT ARE NOTED BY SUBSCRIPTS, REFER TO ABBREVIATION SCHEDULE FOR DEFINED REQUIREMENTS.
3. WHERE OUTLETS, DEVICES AND EQUIPMENT ARE NOTED BY THE SUBSCRIPT 'A', MOUNT AT 4" ABOVE COUNTER. IF COUNTER HAS A BACK SPLASH, MOUNT AT 4" ABOVE BACK SPLASH. REFER TO ARCHITECTURAL INTERIOR ELEVATIONS AND COORDINATE WITH CASEWORK SUPPLIER.
4. NOT ALL ELECTRICAL SYMBOLS MAY BE USED.

ABBREVIATION SCHEDULE

NOTE: NOT ALL ABBREVIATIONS MAY BE USED.

A	ABOVE COUNTER	LS	LONG-TIME, SHORT-TIME
A	AMP OR AMPS	LSI	LONG-TIME, SHORT-TIME INSTANTANEOUS
ACC	ACCESS CONTROL	LSIG	LONG-TIME, SHORT-TIME INSTANTANEOUS GROUND FAULT
ADJ	ADJACENT	LTG	LIGHTING
AFF	ABOVE FINISHED FLOOR	MBJ	MAIN BONDING JUMPER
AHJ	AUTHORITY HAVING JURISDICTION	MCA	MINIMUM CIRCUIT AMPS
AL	ALUMINUM	MCB	MAIN CIRCUIT BREAKER
ATS	AUTOMATIC TRANSFER SWITCH	MLO	MAIN LUGS ONLY
AUX	AUXILIARY	MV	MEDIUM VOLTAGE
AWG	AMERICAN WIRE GAUGE	MW	MICROWAVE
BAS	BUILDING AUTOMATION SYSTEM	NC	NORMALLY CLOSED
BLDG	BUILDING	NEC	NATIONAL ELECTRIC CODE
C	CONDUIT	NIC	NOT IN CONTRACT
CB	CIRCUIT BREAKER	NL	NIGHT LIGHT
CKT	CIRCUIT	NO	NORMALLY OPEN
CLG	CEILING	NTS	NOT TO SCALE
CO	CONVENIENCE OUTLETS	OC	ON CENTER(S)
COMM	COMMUNICATIONS	OCP	OVER CURRENT PROTECTION
CU	COPPER	OCPD	OVER CURRENT PROTECTION DEVICE
(D)	DEMOLISH	PA	PUBLIC ADDRESS
DAS	DISTRIBUTED ANTENNA SYSTEM	PH	PHASE
(E)	EXISTING	PV	PHOTOVOLTAIC
EA	EACH	PWR	POWER
EG	EQUIPMENT GROUND	QTY	QUANTITY
EGC	EQUIPMENT GROUNDING CONDUCTOR	R	REMOVE
ELEC	ELECTRICAL	REF	REFRIGERATOR
EM	EMERGENCY	REQ	REQUIREMENTS
EMT	ELECTRIC METALLIC TUBING	RGC	RIGID GALVANIZED METALLIC CONDUIT
ENT	ELECTRIC NONMETALLIC TUBING	RMC	RIGID METAL CONDUIT
EQUIP	EQUIPMENT	RMP	ROCKY MOUNTAIN POWER
EWC	ELECTRIC WATER COOLER	RNC	RIGID NONMETALLIC CONDUIT
EXP	EXPLOSION PROOF	(RR)	REMOVE AND RELOCATE
FA	FIRE ALARM	S	SURFACE MOUNTED
FACP	FIRE ALARM CONTROL PANEL	SBJ	SYSTEM BONDING JUMPER
FLA	FULL LOAD AMPS	SCP	SECURITY CONTROL PANEL
FMC	FLEXIBLE METAL CONDUIT	SFL	SUB-FEED LUGS
FO	FIBER OPTIC	SPD	SURGE PROTECTIVE DEVICE
FOB	FREIGHT ON BOARD	SS	SURGE SUPPRESSION
FTL	FEED-THROUGH LUGS	SSBJ	SUPPLY SIDE BONDING JUMPER
GEC	GROUNDING ELECTRODE CONDUCTOR	TGB	TELECOMMUNICATION GROUNDING BUS BAR
GND	GROUND CONDUCTOR	TMGB	TELECOMMUNICATION MAIN GROUNDING BUS BAR
H	HOSPITAL GRADE	TR	TAMPER RESISTANT
HOA	HAND-OFF-AUTO	TTB	TELEPHONE TERMINAL BOARD
HP	HORSE POWER	TYP	TYPICAL
HZ	HORIZONTALLY MOUNTED	UF	UNDER FLOOR
IBT	INTERSYSTEM BONDING TERMINATION BAR	UG	UNDERGROUND
ID	INTRUSION DETECTION	UNO	UNLESS NOTED OTHERWISE
IG	ISOLATED GROUND	USB	UNIVERSAL SERIAL BUS
IMC	INTERMEDIATE METAL CONDUIT	VSS	VIDEO SURVEILLANCE SYSTEM
INS	INSULATED	W/	WITH
ISO	ISOLATED	WO/	WITHOUT
KCMIL	KILO CIRCULAR MIL	WP	WEATHER PROOF
KVA	KILO VOLT AMPERES	WR	WEATHER RESISTANT
KW	KILOWATTS	XFMR	TRANSFORMER
LFNC	LIQUID-TIGHT NONMETAL CONDUIT		

VOLTAGE DROP UPSIZING CHART FOR 20AMP, SINGLE PHASE LIGHTING BRANCH CIRCUITS		
120 VOLTS, 10A MAX LOAD, 3% VD		
LENGTH (FT)	CONDUCTOR SIZE	CONDUIT SIZE
0-90	(3)#12	3/4"
91-150	(3)#10	3/4"
150-230	(3)#8	3/4"
230-360	(3)#6	1"
>360	(3)#4	1-1/2"

PROVIDE BRANCH CIRCUIT CONDUCTORS IN SIZES SUCH THAT VOLTAGE DROP FOR BRANCH CIRCUITS DO NOT EXCEED 3% AT THE FARTHEST FIXTURE. INCREASE CONDUCTORSIZES (AND CONDUITS WHERE TO COMPLY WITH NEC CONDUIT FILL REQUIREMENTS) AS NECESSARY TO ACCOMMODATE THIS REQUIREMENT.

VOLTAGE DROP UPSIZING CHART FOR 20AMP, SINGLE PHASE BRANCH CIRCUITS		
120 VOLTS		
LENGTH (FT)	CONDUCTOR SIZE	CONDUIT SIZE
0-80	(3)#12	3/4"
81-125	(3)#10	3/4"
126-200	(3)#8	3/4"
201-320	(3)#6	1"
>320	(3)#4	1-1/2"

PROVIDE BRANCH CIRCUIT CONDUCTORS IN SIZES SUCH THAT VOLTAGE DROP FOR BRANCH CIRCUITS DO NOT EXCEED 3% AT THE FARTHEST OUTLET. INCREASE CONDUCTOR SIZES (AND CONDUITS WHERE TO COMPLY WITH NEC CONDUIT FILL REQUIREMENTS) AS NECESSARY TO ACCOMMODATE THIS REQUIREMENT. CALCULATIONS SHALL BE BASED ON THE FOLLOWING:

1. APPLIANCE AND EQUIPMENT BRANCH CIRCUITS: NAMEPLATE OR NEC REQUIRED LOAD.
2. 120V CONVENIENCE OUTLET BRANCH CIRCUITS - AS PER TABLE ABOVE.
3. USE THE NEC METHOD TO CALCULATE VOLTAGE DROP.

SHEET INDEX

EG001 GENERAL NOTES AND SYMBOLS LISTS
EG501 ELECTRICAL DETAILS
EG502 ELECTRICAL DETAILS
EG503 ELECTRICAL DETAILS
EG504 ELECTRICAL DETAILS
EG505 LIGHTNING PROTECTION DETAILS
EG506 ACCESS CONTROL DOOR ROUGH-IN DETAILS

ES101 SITE PLAN - ELECTRICAL
ES102 SITE PLAN - PHOTOMETRY

EE101 DEMOLITION AND LIGHTING
EE201 POWER AND SYSTEMS
EE301 OVERALL ROOF PLAN
EE701 POWER ONE-LINE DIAGRAM
EE702 LIGHTING DETAILS AND DIAGRAMS
EE801 LIGHTING FIXTURE SCHEDULE & CONTROLS
EE803 ELECTRICAL SCHEDULES

EY701 FIRE ALARM RISER DIAGRAM
EY702 SYSTEMS RISER DIAGRAMS

EA101 AUDIO VISUAL
EA401 AUDIO VISUAL ELEVATIONS
EA601 AUDIO VISUALRISERS & EQUIP LISTS

GENERAL PROJECT NOTES

1. DIVISION 26000 CONTRACTOR IS RESPONSIBLE FOR READING AND APPLYING WHAT IS IN THE SPECIFICATIONS TO THIS PROJECT. ANYTHING THAT IS NOT INCLUDED ON THE PROJECT THAT IS CALLED OUT IN THE SPECIFICATION SHALL BE LISTED ON THE SUBSTANTIAL COMPLETION PUNCHLIST. THE CONTRACTOR WILL BE REQUIRED TO REMEDY THESE DEFICIENCIES WITHOUT ADDITIONAL COSTS TO OWNER. THERE WILL BE NO EXCEPTIONS.
2. THE CONTRACTOR MAY SCHEDULE A PRE-CONSTRUCTION MEETING. AT THEIR DISCRETION, WITH THE ELECTRICAL ENGINEER TO REVIEW THE DRAWINGS AND SPECIFICATIONS. THE MEETING SHALL BE A MAXIMUM OF ONE HOUR AND SHALL TAKE PLACE AT THE ENGINEER'S OFFICE.
3. THE FOLLOWING ITEMS ARE SOME OF THE REQUIREMENTS THAT ARE LISTED IN THE SPECIFICATIONS. THESE ITEMS ARE NOT ALL INCLUSIVE AND THE CONTRACTOR IS RESPONSIBLE FOR COMPLIANCE TO ALL REQUIREMENTS OF THE SPECIFICATIONS:
   A. INSULATED THROAT CONNECTORS OR PLASTIC BUSHINGS SHALL BE UTILIZED FOR ALL CONDUIT SIZED USED ON THIS PROJECT.
   B. THE CONTRACTOR IS RESPONSIBLE FOR UPSIZING CONDUCTORS FOR VOLTAGE DROP PER THE NEC REGARDLESS OF WHETHER IT IS SHOWN ON THE PLANS OR NOT.
   C. THE CONTRACTOR SHALL LABEL ALL ELECTRICAL EQUIPMENT AS IT IS CALLED OUT IN THE SPECIFICATIONS.
   D. THE CONTRACTOR SHALL PROVIDE SEISMIC SUPPORT AND BRACING FOR ALL LIGHT FIXTURES AND ELECTRICAL EQUIPMENT AS REQUIRED BY APPLICABLE LOCAL AND NATIONAL CODES.
4. THE CONTRACTOR SHALL FOLLOW THE PANELBOARD SCHEDULES AS INDICATED IN THE DRAWINGS. EACH CIRCUIT BREAKER HAS BEEN ASSIGNED TO SPECIFIC AREA OF THE BUILDING. NO DEVIATION WILL BE ALLOWED WITHOUT WRITTEN APPROVAL FROM THE ELECTRICAL ENGINEER.
5. THE CONTRACTOR SHALL INSTALL THE WIRE SIZES AS CALLED OUT ON THE ONE-LINE DIAGRAM, EQUIPMENT SCHEDULES, VOLTAGE DROP TABLES, AND ELECTRICAL SPECIFICATIONS. HOWEVER, THE CONTRACTOR IS RESPONSIBLE TO ENSURE THE WIRE IS SIZED LARGE ENOUGH TO ALLOW FOR VOLTAGE DROP.
6. THE CONTRACTOR SHALL VERIFY ALL MECHANICAL OVERCURRENT DEVICES FOR THE ACTUAL MECHANICAL EQUIPMENT SUPPLIED ON THE JOB, PRIOR TO RELEASE OF ANY ELECTRICAL DISTRIBUTION EQUIPMENT. CONTACT THE ELECTRICAL ENGINEER WITH ANY DISCREPANCIES.
7. THE CONTRACTOR SHALL VISIT THE SITE BEFORE SUBMITTING THE BID, AND SHALL EXAMINE ALL PHYSICAL CONDITIONS WHICH MAY BE MATERIAL TO THE PERFORMANCE OF HIS WORK. NO ADDITIONAL PAYMENTS WILL BE ALLOWED TO THE CONTRACTOR AS A RESULT OF EXTRA WORK MADE NECESSARY BY HIS FAILURE TO DO SO. ANY CASE OF DISCREPANCY OR LACK OF CLARITY SHALL BE PROMPTLY IDENTIFIED TO THE OWNER'S REPRESENTATIVE AND THE ENGINEER FOR CLARIFICATION.

Babcock Design

Salt Lake City
52 Exchange Place
Salt Lake City, UT 84111
801.531.1144

Boise
800 W Main Street, Suite 940
Boise, ID 83702
208.424.7675

babcockdesign.com

Consultant

ENVISION ENGINEERING
240 E. MORRIS AVE. SUITE 200
SALT LAKE CITY, UT 84115
P (801) 534-1130
www.envisioneng.com
ENV:2025-252

CITY OF ALPINE

ALPINE FIRE STATION

50 E 100 N ALPINE, UT 84004

Revisions

Num.	Description	Date

Project Number	25116
Original Issue	04.16.2026
Project Status	CONSTRUCTION DOCUMENTS

The information and content represented herein is considered by law the architect's instruments of service and are the property of Babcock Design. They are available for limited review and evaluation by clients, consultants, contractors, government agencies, vendors, and office personnel only in accordance with this notice. They are intended for use only for the project specified and are to be used for no other purpose or project including additions to or modification of the completed project. No part thereof may be copied, reproduced, photographed, modified, published, uploaded, transmitted, disclosed, sold, distributed to others in any way including in digital form, or otherwise used without the prior written consent of Babcock Design.

COPYRIGHT © 2025 BABCOCK DESIGN

Stamp

PROFESSIONAL ENGINEER
9808039-2202
ALEKSANDAR RANKOVIC
STATE OF UTAH
04/16/2026

Sheet Title

GENERAL NOTES AND SYMBOLS LISTS

Sheet Number

EG001

NOTES:

1. GENERATOR PAD SHOWN IS FOR BIDDING PURPOSES ONLY. AFTER SELECTION OF GENERATOR BY CONTRACTOR, THE PAD SHALL BE DESIGNED, CERTIFIED AND STAMPED BY A PROFESSIONAL STRUCTURAL ENGINEER LICENSED IN THE STATE OF UTAH. GENERAL DETAILS OF THE PAD SHALL BE ADHERED TO. THE CONTRACTOR IS RESPONSIBLE FOR ANY COSTS ASSOCIATED WITH STRUCTURAL ENGINEERING DESIGN OF THE GENERATOR PAD.
2. WHERE GENERATOR CONCRETE PAD IS INSTALLED ON A CONCRETE SLAB, DOWELED APPROACH IS ACCEPTABLE, BUT ULTIMATELY THE RESPONSIBILITY OF THE LICENSED STRUCTURAL ENGINEER.

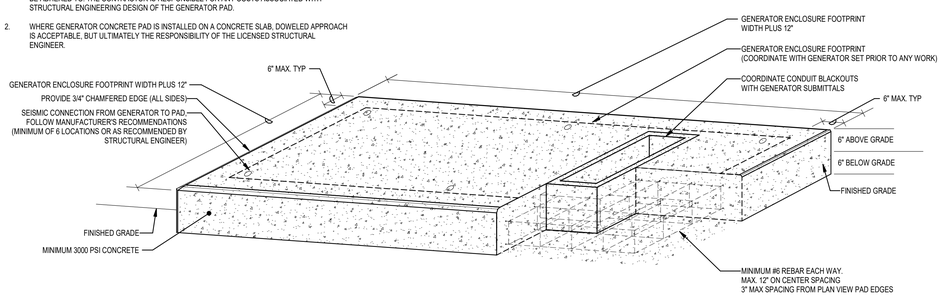

7 GENERATOR CONCRETE PAD DETAIL
SCALE: NTS

NOTES:

1. SIZE BOX IN ACCORDANCE WITH ALL NEC REQUIREMENTS

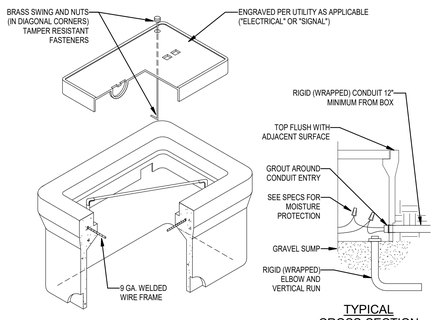

4 CONCRETE JUNCTION BOX
SCALE: NTS

NOTES:

1. PROVIDE 6" MIN. OF PEA GRAVEL BELOW BOX.
2. PROVIDE 1-1/2" PVC AS SHOWN FOR LOOPING CABLE.
3. PROVIDE RIGID GALVANIZED STEEL (RGS) ELBOWS WITH APPROVED PIPE WRAPS.
4. ORIENTATION AND NUMBER OF CONDUITS ARE SHOWN FOR ILLUSTRATIVE PURPOSES AND WILL VARY ACCORDING TO SPECIFIC LOCATION.

APPLICATION TIERS
REFER TO DRAWINGS

LD: LIGHT DUTY PEDESTRIAN TRAFFIC ONLY

T5: TIER 5 SIDEWALK APPLICATIONS WITH A SAFETY FACTOR FOR OCCASIONAL NON-DELIBERATE VEHICULAR TRAFFIC

T8: TIER 8 SIDEWALK APPLICATIONS WITH A SAFETY FACTOR FOR NON-DELIBERATE VEHICULAR TRAFFIC

T15: TIER 15 DRIVEWAY, PARKING LOT AND OFF-ROADWAY APPLICATIONS SUBJECT TO OCCASIONAL NON-DELIBERATE HEAVY VEHICULAR TRAFFIC

T22: TIER 22 DRIVEWAY, PARKING LOT AND OFF-ROADWAY APPLICATIONS SUBJECT TO OCCASIONAL NON-DELIBERATE HEAVY VEHICULAR TRAFFIC

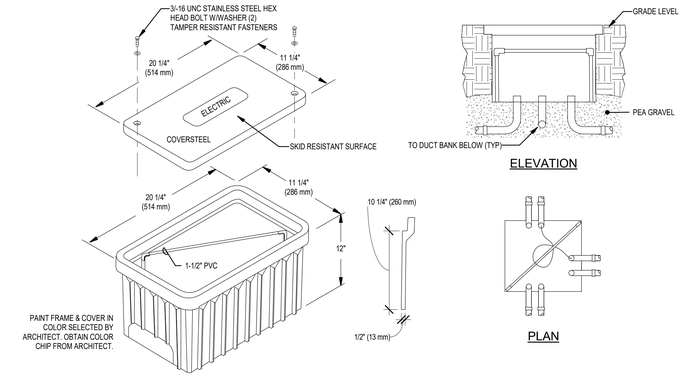

6 IN-GRADE HDPE JUNCTION BOX
SCALE: NTS

ROCKY MOUNTAIN POWER REQUIREMENTS:

THE CONTRACTOR SHALL PROVIDE 1ST STANDOFF, LONG SWEEP FIBERGLASS ELBOW, AND CONDUIT AS REQUIRED BY ROCKY MOUNTAIN POWER FOR A COMPLETE INSTALLATION. ROCKY MOUNTAIN POWER WILL INSTALL STANDOFF AND CONDUIT ONTO POLE. COORDINATE ALL REQUIREMENTS WITH ROCKY MOUNTAIN POWER PRIOR TO ROUGH-IN.

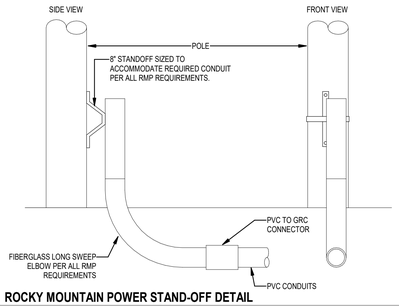

3 ROCKY MOUNTAIN POWER STAND-OFF DETAIL
SCALE: NTS

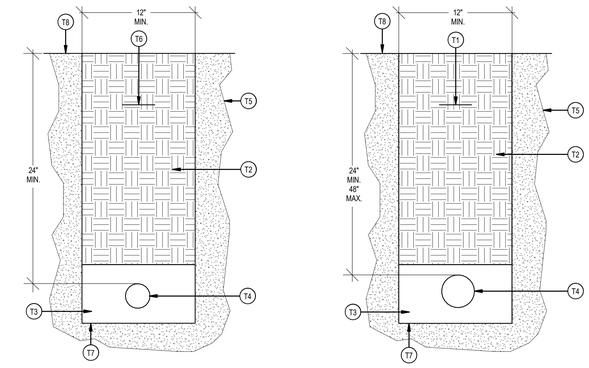

TRENCH DETAIL
SCALE: NONE CENTRA COMMUNICATIONS

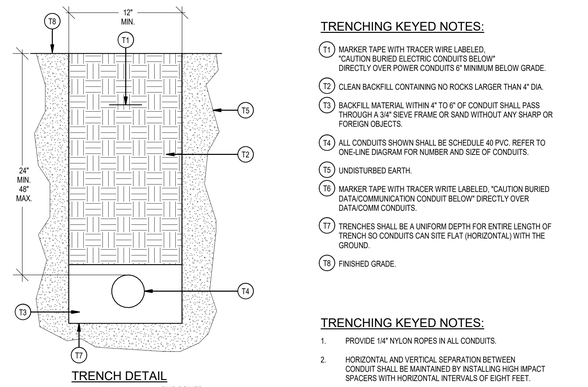

TRENCH DETAIL
SCALE: NONE RMP POWER (SECONDARY POWER)

TRENCHING KEYED NOTES:

- T1 MARKER TAPE WITH TRACER WIRE LABELED, "CAUTION BURIED ELECTRIC CONDUITS BELOW" DIRECTLY OVER POWER CONDUITS 6" MINIMUM BELOW GRADE.
- T2 CLEAN BACKFILL CONTAINING NO ROCKS LARGER THAN 4" DIA.
- T3 BACKFILL MATERIAL WITHIN 4" TO 6" OF CONDUIT SHALL PASS THROUGH A 3/4" SIEVE FRAME OR SAND WITHOUT ANY SHARP OR FOREIGN OBJECTS.
- T4 ALL CONDUITS SHOWN SHALL BE SCHEDULE 40 PVC. REFER TO ONE-LINE DIAGRAM FOR NUMBER AND SIZE OF CONDUITS.
- T5 UNDISTURBED EARTH.
- T6 MARKER TAPE WITH TRACER WRITE LABELED, "CAUTION BURIED DATA/COMMUNICATION CONDUIT BELOW" DIRECTLY OVER DATA/COMM CONDUITS.
- T7 TRENCHES SHALL BE A UNIFORM DEPTH FOR ENTIRE LENGTH OF TRENCH SO CONDUITS CAN SITE FLAT (HORIZONTAL) WITH THE GROUND.
- T8 FINISHED GRADE.

TRENCHING KEYED NOTES:

1. PROVIDE 1/4" NYLON ROPES IN ALL CONDUITS.
2. HORIZONTAL AND VERTICAL SEPARATION BETWEEN CONDUIT SHALL BE MAINTAINED BY INSTALLING HIGH IMPACT SPACERS WITH HORIZONTAL INTERVALS OF EIGHT FEET.
3. ALL MARKER TAPE SHALL CONTAIN #10 TRACER WIRE.
4. REFER TO THE ROCKY MOUNTAIN POWER SIX STATE ESR FOR ADDITIONAL INFORMATION.
5. VERIFY ALL REQUIREMENTS WITH UTILITES PRIOR TO TRENCHING.

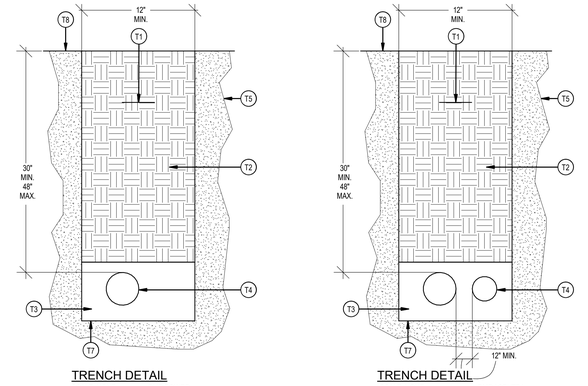

TRENCH DETAIL
SCALE: NONE RMP POWER (PRIMARY POWER)

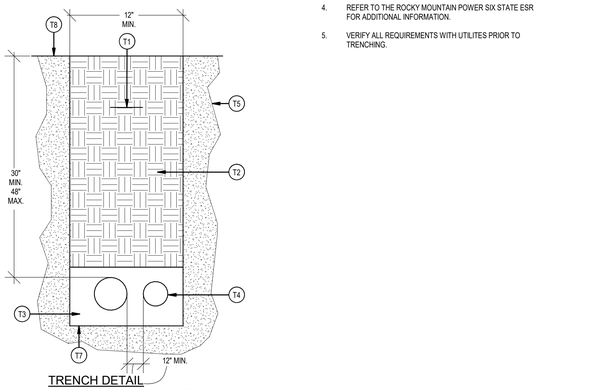

TRENCH DETAIL
SCALE: NONE RMP / CENTRA COMMUNICATIONS (JOINT USE SERVICE TRENCH)

5 TRENCHING DETAILS
SCALE: NTS

TRENCHING GENERAL NOTES:

1. PROVIDE 1/4" NYLON PULL ROPES IN ALL CONDUITS.
2. ALL MARKER TAPE SHALL CONTAIN #10 TRACER WIRE.

TRENCHING KEYED NOTES:

- T1 MARKER TAPE WITH TRACER WIRE LABELED, "CAUTION BURIED ELECTRIC CONDUITS BELOW" DIRECTLY OVER POWER CONDUITS 6" MINIMUM BELOW GRADE.
- T2 CLEAN BACKFILL CONTAINING NO ROCKS LARGER THAN 4" DIA.
- T3 BACKFILL MATERIAL WITHIN 4" TO 6" OF CONDUIT SHALL PASS THROUGH A 3/4" SIEVE FRAME OR SAND WITHOUT ANY SHARP OR FOREIGN OBJECTS.
- T4 ALL CONDUITS SHOWN SHALL BE SCHEDULE 40 MINIMUM 1" PVC. REFER TO PLANS FOR QUANTITY AND SIZE.
- T5 UNDISTURBED EARTH.
- T6 TRENCHES SHALL BE A UNIFORM DEPTH FOR ENTIRE LENGTH OF TRENCH SO CONDUITS CAN SITE FLAT (HORIZONTAL) WITH THE GROUND.
- T7 FINISHED GRADE.
- T8 PATH/REPAIR TO MATCH EXISTING SURFACE.

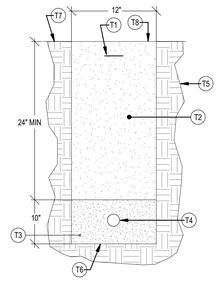

8 SITE LIGHTING TRENCHING DETAIL
SCALE: NTS

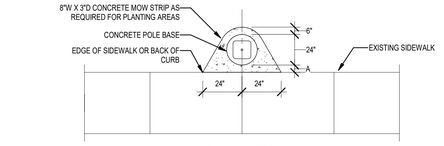

PLAN VIEW

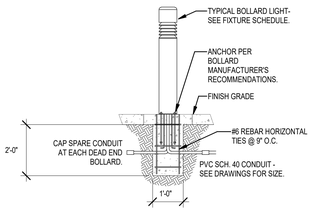

2 LIGHT BOLLARD BASE
SCALE: NTS

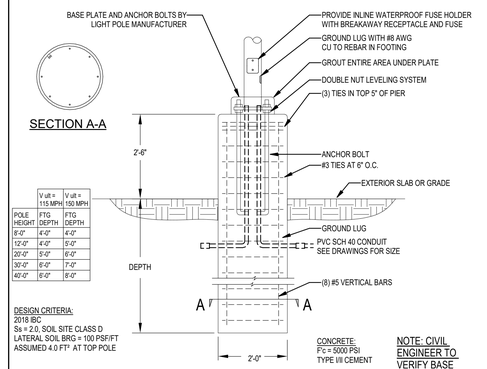

POLE HEIGHT	FTG DEPTH (V ult = 115 MPH)	FTG DEPTH (V ult = 150 MPH)
8'-0"	4'-0"	4'-0"
12'-0"	4'-0"	5'-0"
20'-0"	5'-0"	6'-0"
30'-0"	6'-0"	7'-0"
40'-0"	6'-0"	8'-0"

DESIGN CRITERIA:
2018 IBC
Ss = 2.0, SOIL SITE CLASS D
LATERAL SOIL BRG = 100 PSF/FT
ASSUMED 4.0 FT² AT TOP POLE

CONCRETE:
F'c = 5000 PSI
TYPE I/II CEMENT

NOTE: CIVIL ENGINEER TO VERIFY BASE DETAIL

1 POLE BASE DETAIL 30" - AREA
SCALE: NTS

Babcock Design

Salt Lake City
52 Exchange Place
Salt Lake City, UT 84111
801.531.1144

Boise
800 W Main Street, Suite 940
Boise, ID 83702
208.424.7675

babcock**design**.com

Consultant

ENVISION ENGINEERING
240 E. MORRIS AVE. SUITE 200
SALT LAKE CITY, UT 84115
P (801) 534-1130

www.envisioneng.com
ENV:2025-252

CITY OF ALPINE

ALPINE FIRE STATION

50 E 100 N ALPINE, UT 84004

Revisions

Num.	Description	Date

Project Number	25116
Original Issue	04.16.2026
Project Status	CONSTRUCTION DOCUMENTS

The information and contnet represented herein is considered by law the architect's instruments of service and are the property of Babcock Design. They are available for limited review and evaluation by clients, consultants, contractors, government agencies, vendors, and office personnel only in accordance with this notice. They are intended for use only for the project specified and are to be used for no other purpose or project excluding additions to or modification of the completed project. No part thereof may be copied, reproduced, photographed, modified, published, uploaded, transmitted, disclosed, sold, distributed to others in any way including in digital form, or otherwise used without the prior written consent of Babcock Design.

COPYRIGHT © 2025 BABCOCK DESIGN

Stamp

PROFESSIONAL ENGINEER
9808039-2202
ALEKSANDAR RANKOVIC
STATE OF UTAH
04/16/2026

Sheet Title

ELECTRICAL DETAILS

Sheet Number

EG501

Current as of: 1/6/2026 2:19:39 PM
Original drawing is 30" x 42" Autodesk Docs://25116 - ALPINE FIRE STATION 25D/2025-269-ELEC_CENTRAL_V25.rvt

NOTES:

1. INSTALL PER MANUFACTURER'S INSTALLATION INSTRUCTIONS.

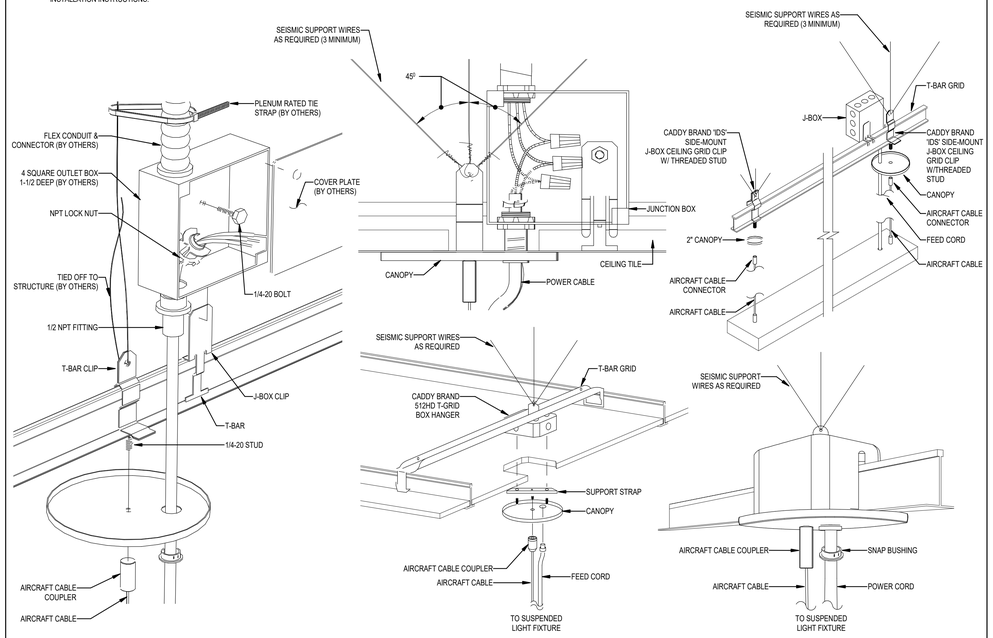

NOTE:
SIMILAR CONSTRUCTION/MOUNTING TO BE USED ON NON-POWER FEED SUPPORT

4 TYPICAL SUSPENDED LIGHT FIXTURE MOUNTING DETAIL
SCALE: NTS

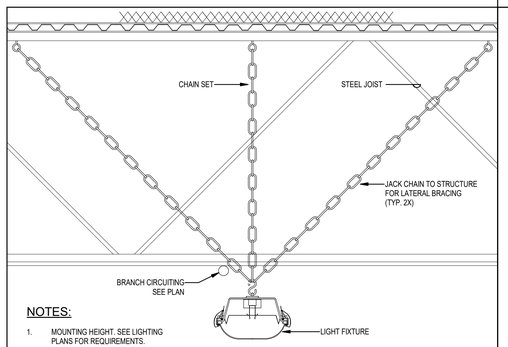

NOTES:

1. MOUNTING HEIGHT: SEE LIGHTING PLANS FOR REQUIREMENTS.

6 TYPICAL CHAIN HUNG LIGHT FIXTURE MOUNTING DETAIL
SCALE: NTS

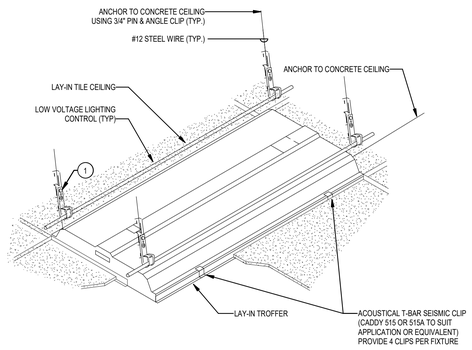

1 PROVIDE J-HOOKS WITH ROD/WIRE CLIP (CADDY 124Z34 OR APPROVED EQUIVALENT) IN QUANTITIES AS MAY BE REQUIRED FOR ROUTING OF LOW VOLTAGE LIGHTING CONTROL CABLES. INSTALL SUPPORTS AND CLIPS 12" ABOVE RECESSED LAY-IN LIGHT FIXTURES. SECURE CABLES AT A SPACING OF NOT MORE THAN 60" ON CENTERS. SUPPLEMENT WITH J-HOOKS SUSPENDED CABLES AT A SPACING OF NOT MORE THAN 60" ON CENTERS. SUPPLEMENT WITH J-HOOKS SUSPENDED BY ALL-THREAD AS MAY BE REQUIRED TO MEET SPACING CRITERIA. INSTALLATION SHALL MEET ALL APPLICABLE REQUIREMENTS OF THE NEC 300.11. ALL CABLES SHALL BE ROUTED IN A NEAT WORKMANLIKE MANNER PARALLEL AND PERPENDICULAR TO CEILING GRIDS.

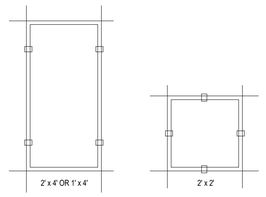

SUPPORT CLIP ARRANGEMENT DIAGRAMS

3 TYPICAL LAY-IN GRID LIGHT FIXTURE MOUNTING DETAIL
SCALE: NTS

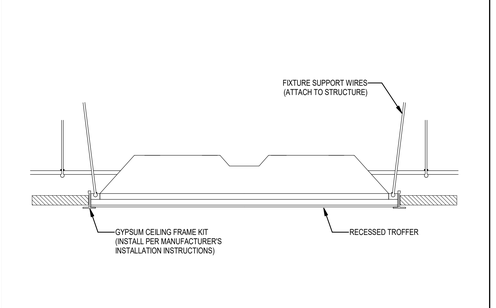

5 TYPICAL GYPSUM CEILING RECESSED TROFFER MOUNTING DETAIL
SCALE: NTS

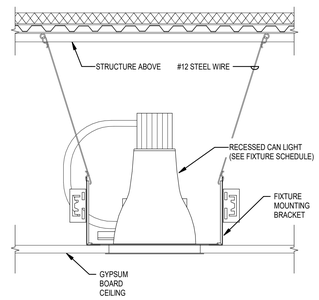

2 TYPICAL RECESSED CAN GYPSUM CEILING MOUNTING DETAIL
SCALE: NTS

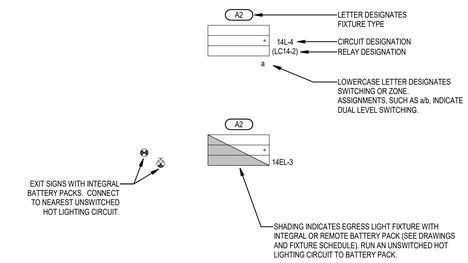

1 TYPICAL LIGHT FIXTURE LABELING AND CIRCUITING CONVENTION DETAIL
SCALE: NTS

Babcock Design

Salt Lake City
52 Exchange Place
Salt Lake City, UT 84111
801.531.1144

Boise
800 W Main Street, Suite 940
Boise, ID 83702
208.424.7675

babcock**design**.com

Consultant

ENVISION ENGINEERING
240 E. MORRIS AVE. SUITE 200
SALT LAKE CITY, UT 84115
P (801) 534-1130

www.envisioneng.com

ENV:2025-252

CITY OF ALPINE

ALPINE FIRE STATION

50 E 100 N ALPINE, UT 84004

Revisions

Num.	Description	Date

Project Number	25116
Original Issue	04.16.2026
Project Status	CONSTRUCTION DOCUMENTS

The information and contnent represented herein is considered by law the architect's instruments of service and are the property of Babcock Design. They are available for limited review and evaluation by clients, consultants, contractors, government agencies, vendors, and office personnel only in accordance with this notice. They are intended for use only for the project specified and are to be used for no other purpose or project excluding additions to or modification of the completed project. No part thereof may be copied, reproduced, photographed, modified, published, uploaded, transmitted, disclosed, sold, distributed to others in any way including in digital form, or otherwise used without the prior written consent of Babcock Design.

COPYRIGHT © 2025 BABCOCK DESIGN

Stamp

PROFESSIONAL ENGINEER
9806039-2202
ALEKSANDAR RANKOVIC
STATE OF UTAH
04/16/2026

Sheet Title

ELECTRICAL DETAILS

Sheet Number

EG502

Original drawing is 30" x 42" Autodesk Docs://25116 - ALPINE FIRE STATION 25D/2025-269-ELEC_CENTRAL_V25.rvt

Current as of: 1/6/2026 2:19:3 PM

NOTES:

1. TIE WIRE SHALL NOT BE USED AS A COMPONENT OF ANY RACEWAY HANGER SYSTEM.

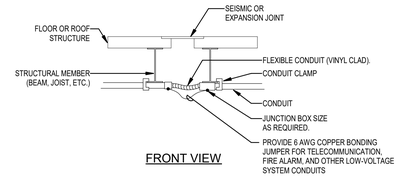

FRONT VIEW

11 TYPICAL EXPANSION JOINT DETAIL
SCALE: NTS

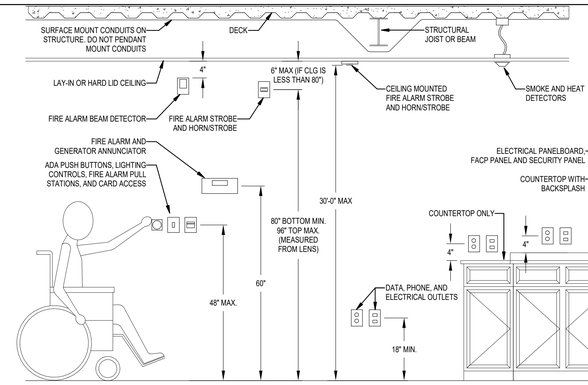

NOTES:

1. MOUNT ALL OUTLETS, DEVICES, AND EQUIPMENT AT HEIGHTS INDICATED BELOW, UNLESS NOTED OTHERWISE ON THE DRAWINGS. UNLESS NOTED OTHERWISE, HEIGHTS ARE GIVEN FROM FINISHED FLOOR TO CENTER OF OUTLET BOX.
2. WHERE OUTLETS, DEVICES AND EQUIPMENT ARE NOTED BY THE SUBSCRIPT 'A', MOUNT AT 4" ABOVE COUNTER. IF COUNTER HAS A BACK SPLASH, MOUNT AT 4" ABOVE BACK SPLASH. REFER TO ARCHITECTURAL INTERIOR ELEVATIONS AND COORDINATE WITH CASEWORK SUPPLIER.

4 TYPICAL ADA AND EQUIPMENT MOUNTING HEIGHT DETAIL
SCALE: NTS

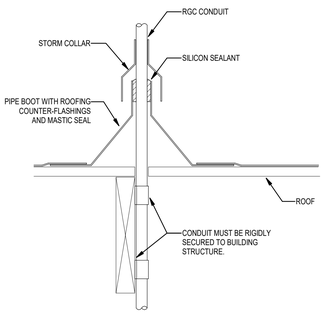

10 CONDUIT THROUGH ROOF FLASHING DETAIL
SCALE: NTS

NOTES:

1. THE WIRE SHALL NOT BE USED AS A COMPONENT OF ANY RACEWAY HANGER SYSTEM.

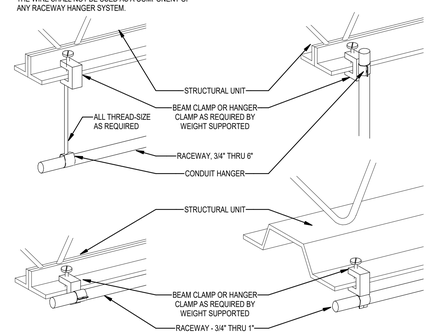

7 TYPICAL SINGLE RACEWAY SUPPORT DETAILS
SCALE: NTS

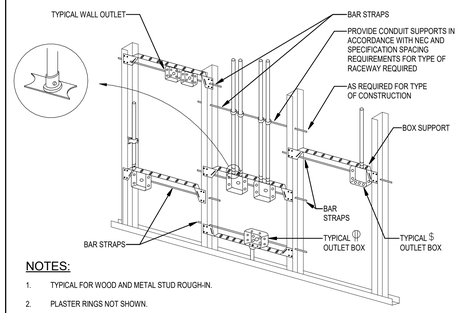

NOTES:

1. TYPICAL FOR WOOD AND METAL STUD ROUGH-IN.
2. PLASTER RINGS NOT SHOWN.
3. LOCATE ALL OUTLET BOXES IN ACCORDANCE WITH ARCHITECTURAL AND MECHANICAL DRAWINGS, AND WITH ALL APPLICABLE SHOP DRAWINGS.
4. OUTLETS ON OPPOSITE SIDES OF FIRE RATED WALLS OR PARTITIONS IN THE SAME STUD SPACE MUST BE SEPARATED BY A MINIMUM OF 24" HORIZONTAL DISTANCE.

3 TYPICAL ROUGH-IN REQUIREMENTS
SCALE: NTS

NOTES:

1. SUPPORT FROM WALL 12 INCHES ABOVE FINISHED GRADE, UNLESS NOTED OTHERWISE.
2. PROVIDE IN MAIN TELECOMMUNICATION ROOM.
3. EXTEND BONDING CONDUCTOR BACK TO MAIN ELECTRICAL SERVICE BONDING BAR.
4. SEE SPECIFICATION SECTION 260452 FOR DETAILS. PROVIDE MANUFACTURER AND PART NUMBER INDICATED OR APPROVED EQUIVALENT.

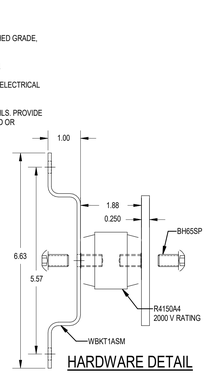

HARDWARE DETAIL

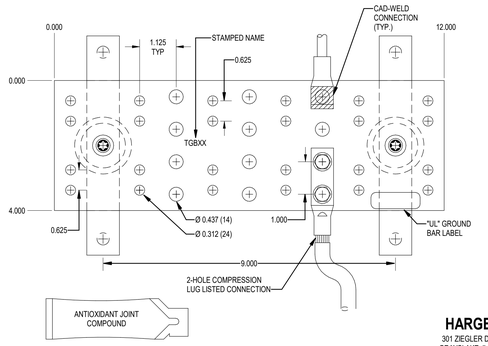

HCAJC1/2

HARGER
301 ZIEGLER DRIVE
GRAYSLAKE, IL 60030
(847) 548-8700

PART NO. GBI14212TGB
BICSI CU GROUND BAR ASSEMBLY

9 TELECOMMUNICATIONS GROUNDING BUS BAR - TMGB
SCALE: NTS

NOTES:

1. PROVIDE SUPPORT EVERY 8' OF CONDUIT RUN.

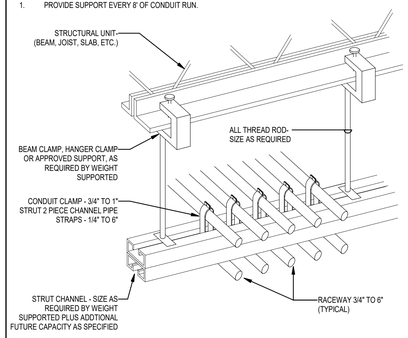

6 TYPICAL MULTIPLE RACEWAY SUPPORT DETAIL
SCALE: NTS

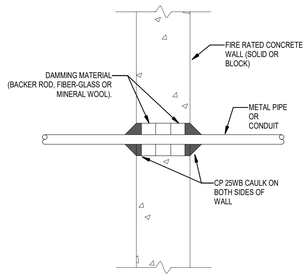

2 TYPICAL CONCRETE WALL PENETRATION DETAIL
SCALE: NTS

NOTES:

1. SUPPORT FROM WALL 12 INCHES ABOVE FINISHED GRADE, UNLESS NOTED OTHERWISE.
2. CLEAN ALL SURFACES TO BRIGHT METAL AND USE ANTIOXIDANT JOINT COMPOUND PRIOR TO MAKING ANY CONNECTIONS.

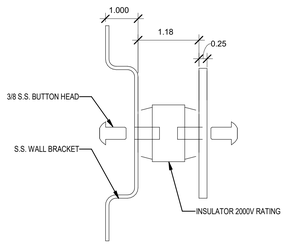

SIDE VIEW

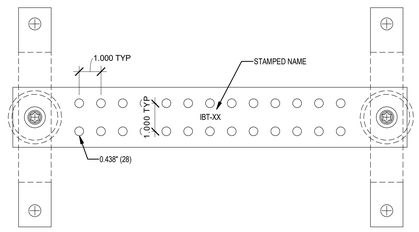

FRONT VIEW

8 INTERSYSTEM BONDING TERMINATION GROUNDING BUS BAR DETAIL - IBT
SCALE: NTS

5 TYPICAL OUTLET CONVENTION
SCALE: NTS

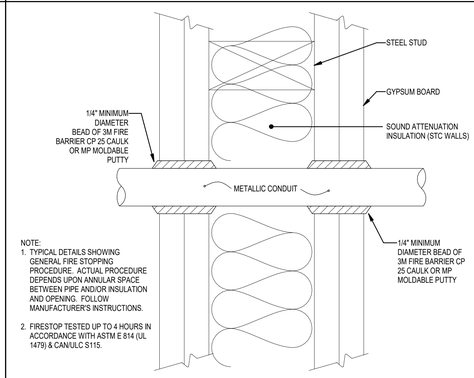

NOTE:
1. TYPICAL DETAILS SHOWING GENERAL FIRE STOPPING PROCEDURE. ACTUAL PROCEDURE DEPENDS UPON ANNULAR SPACE BETWEEN PIPE AND/OR INSULATION AND OPENING. FOLLOW MANUFACTURER'S INSTRUCTIONS.
2. FIRESTOP TESTED UP TO 4 HOURS IN ACCORDANCE WITH ASTM E 814 (UL 1479) & CAN/ULC S115.

1 TYPICAL GYPBOARD WALL PENETRATION DETAIL
SCALE: NTS

Babcock Design

Salt Lake City
52 Exchange Place
Salt Lake City, UT 84111
801.531.1144

Boise
800 W Main Street, Suite 940
Boise, ID 83702
208.424.7675

babcock**design**.com

Consultant

ENVISION ENGINEERING
240 E. MORRIS AVE. SUITE 200
SALT LAKE CITY, UT 84115
P (801) 534-1130

www.envisioneng.com

ENV:2025-252

CITY OF ALPINE

ALPINE FIRE STATION

50 E 100 N ALPINE, UT 84004

Revisions

Num.	Description	Date

Project Number	25116
Original Issue	04.16.2026
Project Status	CONSTRUCTION DOCUMENTS

The information and contnet represented herein is considered by law the architect's instruments of service and are the property of Babcock Design. They are available for limited review and evaluation by clients, consultants, contractors, government agencies, vendors, and office personnel only in accordance with this notice. They are intended for use only for the project specified and are to be used for no other purpose or project excluding additions to or modification of the completed project. No part thereof may be copied, reproduced, photographed, modified, published, uploaded, transmitted, disclosed, sold, distributed to others in any way including in digital form, or otherwise used without the prior written consent of Babcock Design.

COPYRIGHT © 2025 BABCOCK DESIGN

Stamp

PROFESSIONAL ENGINEER
9808039-2202
ALEKSANDAR RANKOVIC
STATE OF UTAH
04/16/2026

Sheet Title

ELECTRICAL DETAILS

Sheet Number

EG503

Original drawing is 30" x 42" Autodesk Docs://25116 - ALPINE FIRE STATION 25D/2025-269-ELEC_CENTRAL_V25.rvt
Current as of: 1/6/2026 2:19:3 PM

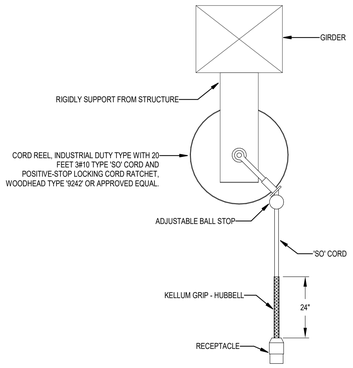

12 CORD REEL DETAIL
SCALE: NTS

NOTE:
1. PROVIDE CONDUITS AND BOXES FOR ADDITIONAL OVERHEAD DOOR SENSORS AS REQUIRED.

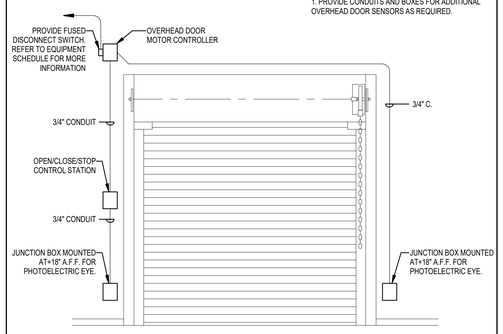

11 OVERHEAD DOOR DETAIL
SCALE: NTS

OHS (SYMBOL)

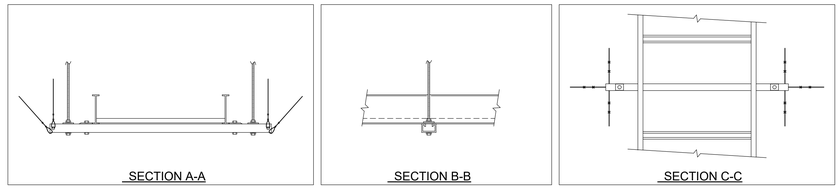

NOTES:
1. PROVIDE LONGITUDINAL AND LATERAL SUPPORT SPACING IN ACCORDANCE WITH THE FOLLOWING:

MAXIMUM CABLE TRAY PLUS CABLE WT.	VERTICAL SUPPORT SPACING	LATERAL SUPPORT SPACING	LONGITUDINAL SUPPORT SPACING	ROD DIAMETER	CABLE BRACE SWIVEL ANCHOR & CABLE
POUNDS/FOOT	FEET	FEET	FEET	INCHES	
25	10	10	20	0.375	SCB2
50	10	10	20	0.500	SCB3

2. PROVIDE METAL FRAMING CHANNEL ON ALL VERTICAL SUPPORTS WHEN ROD LENGTH EXCEEDS 14". STIFFENER CLIP SPACING SHALL BE 12".
3. SEE SPECIFICATIONS FOR APPROVED FITTINGS FOR ATTACHMENT TO STRUCTURE.

GENERAL NOTES:
1. COORDINATE ROUTING OF CABLE TRAYS AND SUPPORT SYSTEMS WITH ALL DIVISIONS.
2. DO NOT SUPPORT FROM BOTTOM CORD OF TRUSSES.
3. WHERE CABLE TRAYS ARE ROUTING ABOVE SUSPENDED CEILINGS, INSTALL TRAY NO MORE THAN 6" FROM CEILING TO BOTTOM OF TRAY.

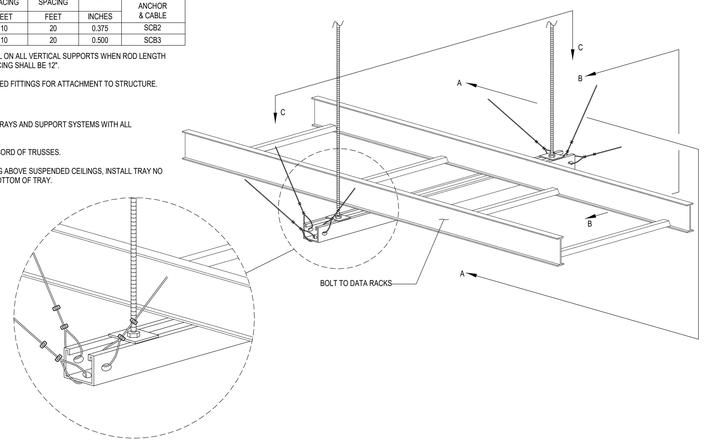

4 SEISMIC BRACING FOR CABLE TRAY/CABLES
SCALE: NTS

NOTE:
1. MOUNT J-HOOKS SUCH THAT CABLE IS A MINIMUM OF 3" ABOVE FINISHED CEILING.

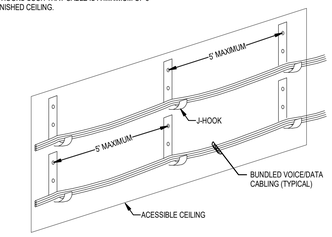

10 TYPICAL WALL MOUNTED J-HOOK DETAIL
SCALE: NTS

KEYED NOTES: (#)
1. COORDINATE LOCATION OF JUNCTION BOX WITH EQUIPMENT SUPPLIER PRIOR TO ROUGH-IN.
2. SEE FLOOR PLAN FOR CIRCUIT NUMBERS.
3. CIRCUIT BREAKER MUST BE CAPABLE OF BEING LOCKED IN OPEN POSITION AS PER NEC 422.31(B).

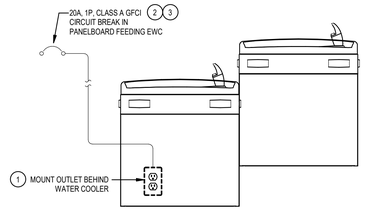

7 ELECTRIC WATER COOLER DETAIL
SCALE: NTS

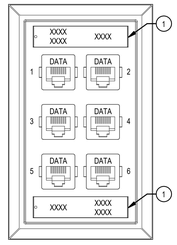

◀ #X

WHERE:
X : NUMBER OF DROPS (CABLES) AND COMPLETED JACKS.

KEYED NOTES: (#)
1. PROVIDE A MACHINE PRINTED LABEL PERMANENTLY FIXED TO THE FACEPLATE. FORMAT SHALL BE "FA-AN" WHERE THE LABEL MATCHES THE PATCH PANELIDC LABEL FOR EXAMPLE "1A-B01" = TELECOM ROOM A, PATCH PANEL B, PORT 01.

GENERAL NOTES:
1. THE DETAILS INDICATED ON THE DRAWINGS ARE NOT INTENDED TO IMPLY SPECIFIC MANUFACTURERS OR OUTLET TYPES. THEY ARE MERELY INTENDED TO DESCRIBE THE DESIGN INTENT. THOSE MANUFACTURERS LISTED IN THE SPECIFICATIONS MAY BE USED. IT IS UNDERSTOOD THAT EQUIPMENT MAY VARY SLIGHTLY BY MANUFACTURER.
2. REFER TO OUTLET DETAILS FOR ALL PORT QUANTITIES AND FACEPLATE TYPES.

9 OUTLET LABELING REQUIREMENTS KEY PLAN
SCALE: NTS

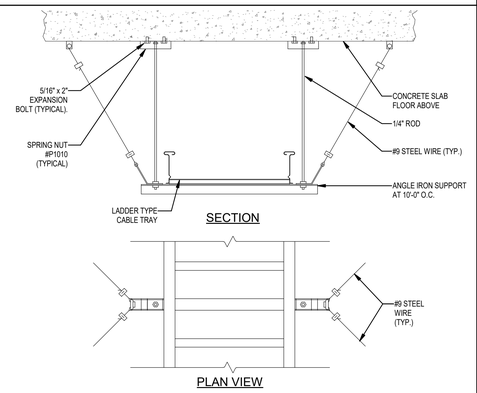

6 TYPICAL CABLE TRAY SUSPENSION DETAIL
SCALE: NTS

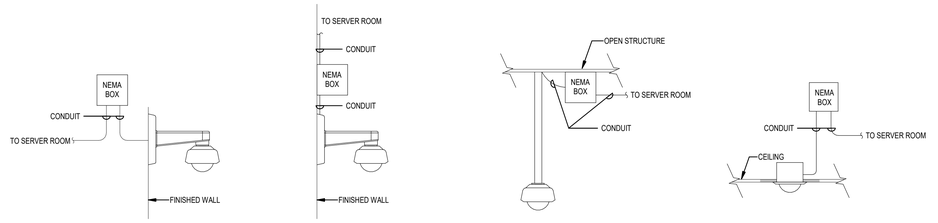

3 TYPICAL CAMERA MOUNTING DETAIL
SCALE: NTS

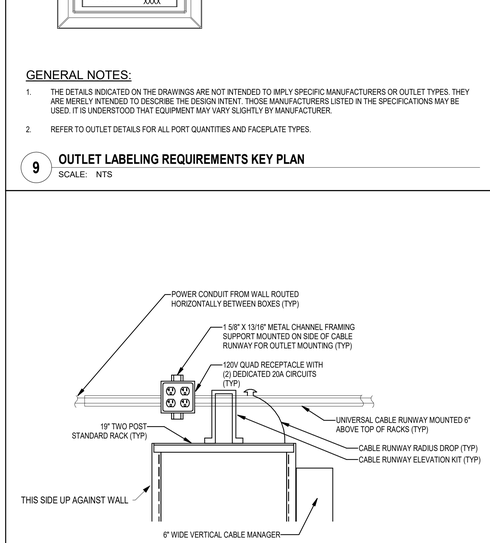

8 TYPICAL TELECOM ROOM RACK OUTLET MOUNTING DETAIL FRONT VIEW
SCALE: NTS

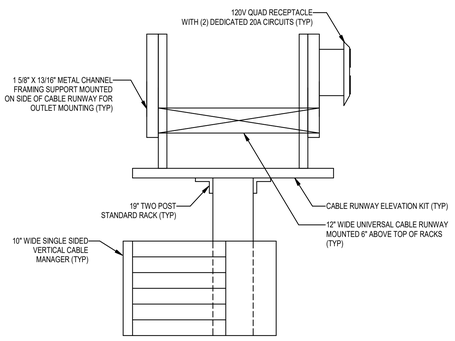

5 TYPICAL TELECOM ROOM RACK OUTLET MOUNTING DETAIL SIDE VIEW
SCALE: NTS

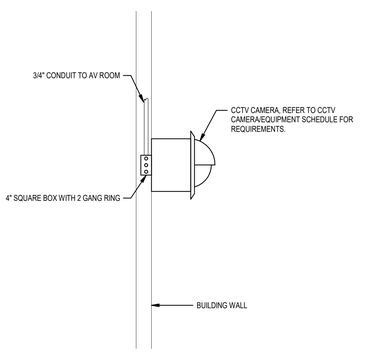

2 EXTERIOR WALL MOUNTED CAMERA DETAIL
SCALE: NTS

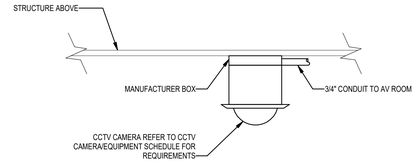

1 EXTERIOR CEILING SURFACE MOUNTED CAMERA DETAIL
SCALE: NTS

Babcock Design

Salt Lake City
52 Exchange Place
Salt Lake City, UT 84111
801.531.1144

Boise
800 W Main Street, Suite 940
Boise, ID 83702
208.424.7675

babcock**design**.com

Consultant

ENVISION ENGINEERING
240 E. MORRIS AVE. SUITE 200
SALT LAKE CITY, UT 84115
P (801) 534-1130
www.envisioneng.com
ENV:2025-252

CITY OF ALPINE

ALPINE FIRE STATION

50 E 100 N ALPINE, UT 84004

Revisions

Num.	Description	Date

Project Number	25116
Original Issue	04.16.2026
Project Status	CONSTRUCTION DOCUMENTS

The information and contnet represented herein is considered by law the architect's instruments of service and are the property of Babcock Design. They are available for limited review and evaluation by clients, consultants, contractors, government agencies, vendors, and office personnel only in accordance with this notice. They are intended for use only for the project specified and are to be used for no other purpose or project including additions to or modification of the completed project. No part thereof may be copied, reproduced, photographed, modified, published, uploaded, transmitted, disclosed, sold, distributed to others in any way including in digital form, or otherwise used without the prior written consent of Babcock Design.

COPYRIGHT © 2025 BABCOCK DESIGN

Stamp

PROFESSIONAL ENGINEER
9806039-2202
ALEKSANDAR RANKOVIC
STATE OF UTAH
04/16/2026

Sheet Title

ELECTRICAL DETAILS

Sheet Number

EG504

Original drawing is 30" x 42" Autodesk Docs://25116 - ALPINE FIRE STATION 25D/2025-269-ELEC_CENTRAL_V25.rvt
Current as of: 1/6/2026 2:51:17 PM

#234 - U-BOLT PIPE BONDING CLAMP

10 BOND DETAIL 5
SCALE: NTS

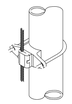

#235 - PIPE BONDING CLAMP

9 BOND DETAIL 4
SCALE: NTS

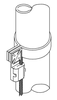

#231 - PIPE BONDING STRAP

8 BOND DETAIL 3
SCALE: NTS

#217 - TINNED BONDING PLATE

7 BOND DETAIL 2
SCALE: NTS

A

AIR TERMINAL

1/2" X 12" LONG SOLID ALUMINUM STEEL

IPC #A331
ROBBINS #A24
THOMPSON #A55
VFC #A71

B

CONCEALED AIR TERMINAL BASE ASSEMBLY

CONSISTS OF 1/2" X 12" SOLID ALUMINUM RISER BAR. CABLE CONNECTOR CLAMPS UNDER PRESSURE TO RISER BAR AND CABLE. UNDER ROOF NUT AND LEAD SEALING WASHER FOR ABOVE THE ROOF. INCLUDES ADAPTER FOR 1/2" POINTS WHICH SCREW ON LEAD WASHER.

IPC #A331
ROBBINS #A24
THOMPSON #A55
VFC #A71

C

GROUND ROD

3/4" X 10' COPPERCLAD

IPC #579
ROBBINS #97-10
THOMPSON #TL3410
VFC #3410

D

SMOOTH TWIST ALUMINUM CABLE

24 STRAND, 14 GAUGE CABLE, 96,500 CIRCULAR MILS.

IPC #A24
ROBBINS #A3
THOMPSON #A24
VFC #A24S

E

SMOOTH TWIST COPPER CABLE

32 STRAND, 14 GAUGE CABLE, 65,500 CIRCULAR MILS.

IPC #32S
ROBBINS #1
THOMPSON #32
VFC #32

F

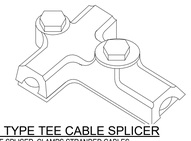

PRESSURE TYPE TEE CABLE SPLICER

PRESSURE TYPE TEE SPLICER. CLAMPS STRANDED CABLES THROUGH 2/0. FINISHED COMPLETE WITH TWO HEX BOLTS AND WASHERS.

IPC #304
ROBBINS #664
THOMPSON #706
VFC #207

G

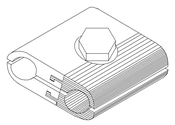

BIMETAL PARALLEL CLAMPS

COPPER TO ALUMINUM BIMETALLIC CLAMP MADE OF CAST ALUMINUM AND BRONZE INHERENTLY MOLDED AS ONE UNIT FOR SPLICING STANDARD ALUMINUM CABLE TO COPPER CABLE THROUGH 2/0 SIZE

IPC #306A
ROBBINS #63B
THOMPSON #240X
VFC #233

H

COPPER LOOP FASTENER

FITS STANDARD CABLES THROUGH 2/0 COPPER, 1/2" WIDE FOR ONE NAIL OR WOOD SCREWS.

IPC #121A
ROBBINS #72
THOMPSON #165
VFC #251

J

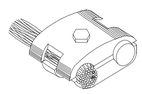

LARGE BRONZE CLAMP

HEAVY DUTY, FOR CLAMPING TWO STANDARD CABLES THROUGH 2/0 AND/OR THROUGH 5/8" RODS.

IPC #297A
ROBBINS #52
THOMPSON #141
VFC #212

K

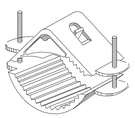

PIPE CLAMP

ADJUSTABLE TINNED BRONZE CLAMP FOR BONDING TO PIPES. FITS PIPES 1 1/4" TO 2 1/4" O.D.

IPC #306A
ROBBINS #63B
THOMPSON #240X
VFC #233

L

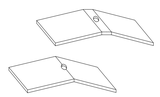

FLASHING SADDLE

FLEXIBLE ALUMINUM 3 1/8" WIDE FLASHING SADDLE. FITS ALL PITCHED ROOFS.

ROBBINS #A121FS
THOMPSON #A682X

M

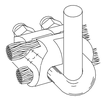

PERPENDICULAR GROUND ROD AND CABLE CLAMP

COPPER BRONZE FOR CONNECTING ONE OR TWO HORIZONTAL CABLES THROUGH 2/0 TO ANY SIZE GROUND ROD THROUGH 3/4".

IPC #28U
ROBBINS #99A
THOMPSON #493
VFC #305

N

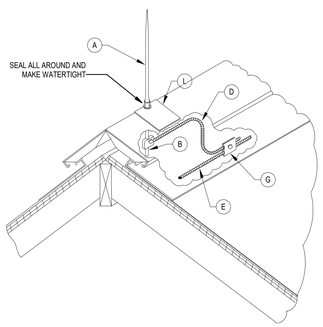

CONCEALED AIR TERMINAL INSTALLATION DETAIL

SCALE: N.T.S.

P

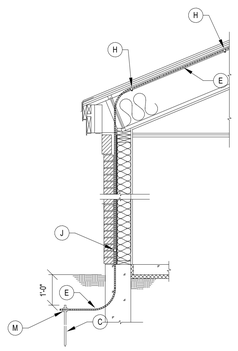

CABLE INSTALLATION DETAIL

SCALE: 1/2" = 1'-0"

#216 - BUS TERMINAL

6 BOND DETAIL
SCALE: NTS

#204 - PARALLEL CLAMP

5 SPLICE DETAIL
SCALE: NTS

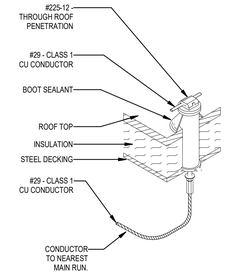

4 THROUGH ROOF DETAIL
SCALE: NTS

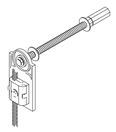

#225-12 - THRU WALL, 12"

3 PENETRATION DETAIL
SCALE: NTS

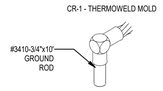

2 GROUND ROD DETAIL
SCALE: NTS

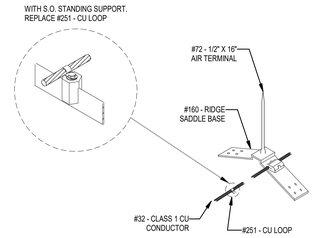

1 AIR TERMINAL DETAIL
SCALE: NTS

GENERAL & INSTALLATION NOTES:

1. LOCATE AIR TERMINALS AS SHOWN. TAKE CARE TO INSURE THAT ALL POINTS ARE WITHIN 2'-0" OF OUTSIDE BUILDING EDGE, OUTSIDE CORNERS, & RIDGE ENDS, AND THAT MAXIMUM SPACE DOES NOT EXCEED 20'-0", AND THAT MINIMUM PROJECTION ABOVE OBJECT PROTECTED IS 10", (POINTS PROJECTING 24" MAY BE SPACED @ 25' MAX).
2. MAINTAIN HORIZONTAL OR DOWNWARD COURSING OF MAIN CONDUCTOR AND INSURE THAT ALL BENDS HAVE AT LEAST AN 8" RADIUS AND DO NOT EXCEED 90 DEGREES.
3. ATTACH ALL EXPOSED ROOD, DOWNLEAD AND BONDING CABLES AT 3'-0" ON CENTER MAXIMUM. VERIFY COMPATIBILITY OF ADHESIVE ON MEMBRANE ROOF APPLICATION PRIOR TO INSTALLATION.
4. GROUND ELECTRODES SHALL BE INSTALLED AS SHOWN BUT IN NO INSTANCE SHALL THEY BE LESS THAN 1'-0" BELOW GRADE AND 2'-0" FROM FOUNDATION WALL. DRIVEN RODS SHALL PENETRATE EARTH AT LEAST 10'-0".
5. BOND TO WATER SERVICE AND OTHER PIPING SYSTEMS AS SHOWN AND AS REQUIRED BY CODES.
6. INTERCONNECT LIGHTNING PROTECTION GROUND TO ELECTRIC, TELEPHONE, AND OTHER BUILDING GROUND SYSTEMS AS SHOWN OR AS REQUIRED BY CODE.
7. SYSTEM SHALL BE INSTALLED AS SHOWN TO INSURE PROPER CODE COMPLIANCE AND SYSTEM CERTIFICATION. ANY MAJOR VARIANCE SHALL ENTAIL RESUBMITTAL AND NEW APPROVAL.
8. 'AS BUILD' DRAWINGS SHALL BE SUBMITTED IN ACCORDANCE WITH CERTIFICATION PROCEDURES
9. ALL MATERIALS TO BE UNDERWRITER'S LABORATORIES APPROVED WITH 'A' LABELS ON CONDUCTORS @ 10'-0" INTERVALS AND 'B' LABELS ON ALL AIR TERMINALS.
10. COMPLETED INSTALLATION AS SHOWN SHALL BEAR U.L. MASTER LABEL 'C' TO BE SECURED BY SYSTEM INSTALLER PER UL96A.
11. ALL MATERIALS SHOWN AND INTENDED FOR USE ARE TO BE SUPPLIED BY VFC LIGHTNING PROTECTION INC., 1409 SOUTH 600 WEST UNIT A, WOODS CROSS UTAH 84087-0077. ALL PART #'S ARE VFC PART #'S.
12. INSTALLATION SHALL COMPLY IN ALL RESPECTS TO L.P.I. CODE 175. INSTALLATION SHALL BE MADE OR UNDER THE SUPERVISION OF AN L.P.I. CERTIFIED MASTER INSTALLER.

BONDING NOTES: (#)

A. ITEMS 1-10 ARE TYPICAL BODIES OF CONDUCTANCE AS NOTED
BELOW. USE FULL SIZE CONDUCTOR & APPROPRIATE FITTING
SHOWN FOR CONNECTION.

B. ITEM 11(PLUMBING STACK) REQUIRES BONDING WITH MAIN SIZE
CABLE ONLY IF WITH 6'-0" OF SYSTEM.

C. ITEMS 12-14 ARE TYPICAL BODIES OF INDUCTANCE AS NOTED BELOW. USE SECONDARY SIZE SMALLER CONDUCTOR & APPROPRIATE FITTING SHOWN FOR CONNECTION. (ITEM 12 TYPICALLY OCCURS AT EACH DOWN-LEAD AND ROOF LEVEL CHANGE AS SHOWN).

D. BONDING CONNECTIONS AND FITTINGS SHOWN ARE TYPICAL EXAMPLES-MAKE ALL CONNECTIONS REQUIRED TO MEET CODE AS NOTED BELOW. ADJUST FITTING TYPE AS REQUIRED TO SUIT FIELD CONDITIONS.

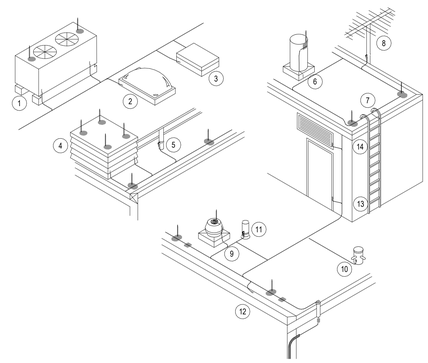

Babcock Design

Salt Lake City
52 Exchange Place
Salt Lake City, UT 84111
801.531.1144

Boise
800 W Main Street, Suite 940
Boise, ID 83702
208.424.7675

babcock**design**.com

Consultant

ENVISION ENGINEERING
240 E. MORRIS AVE. SUITE 200
SALT LAKE CITY, UT 84115
P (801) 534-1130

www.envisioneng.com
ENV:2025-252

CITY OF ALPINE

ALPINE FIRE STATION

50 E 100 N ALPINE, UT 84004

Revisions

Num.	Description	Date

Project Number	25116
Original Issue	04.16.2026
Project Status	CONSTRUCTION DOCUMENTS

The information and content represented herein is considered by law the architect's instruments of service and are the property of Babcock Design. They are available for limited review and evaluation by clients, consultants, contractors, government agencies, vendors, and office personnel only in accordance with this notice. They are intended for use only for the project specified and are to be used for no other purpose or extension without the written permission of Babcock Design. Unauthorized use, sharing, duplication, reproduced, photographed, modified, published, uploaded, transmitted, disclosed, sold, distributed to others in any way including in digital form, or otherwise used without the prior written consent of Babcock Design.

COPYRIGHT © 2025 BABCOCK DESIGN

Stamp

PROFESSIONAL ENGINEER
9908039--2202
ALEKSANDAR KANKOVIC
STATE OF UTAH
04/16/2026

Sheet Title

LIGHTNING PROTECTION DETAILS

Sheet Number

EG505

Current as of: 4/16/2026 2:19:27 PM
Original drawing is 30" x 42". Autodesk Docs://25116 - ALPINE FIRE STATION 2026/2025-269-ELEC_CENTRAL_V25.rvt

ACCESS CONTROL COORDINATION REQUIREMENTS:

CODE REFERENCES AND REQUIREMENTS:
2016 NFPA 101 - LIFE SAFETY CODE
- 7.2.1.5.6(5) REQUIRES THAT LOSS OF POWER WILL UNLOCK THE ELECTRICALLY CONTROLLED DOOR HARDWARE.
  7.2.1.6.2.(4) REQUIRES THAT ACTIVATION OF THE BUILDING FIRE ALARM SYSTEM UNLOCK ALL DOORS LOCATED IN THE PATH OF EGRESS. 2016 NFPA 80 - FIRE DOORS AND OTHER OPENING PROTECTIVES

2016 NFPA 60 - FIRE DOORS AND OTHER OPENING PROTECTIVES
- 6.1.3.4 REQUIRES THAT POWER OPERATED FIRE DOORS HAVE A RELEASING DEVICE TO AUTOMATICALLY RELEASE POWER UPON FIRE ALARM.
- 6.4.4.3.3 REQUIRES THAT FIRE RATED DOORS BE POSITIVELY LATCHED TO MAINTAIN THE FIRE RATING, ALL ELECTRIC STRIKES USED IN FIRE RATED DOORS MUST BE FAIL SECURE.

2012 IBC - INTERNATIONAL BUILDING CODE
- 1010.1.9.8 REQUIRES ELECTROMAGNETICALLY LOCKED DOORS HAVE A SENSOR RELEASE SWITCH EITHER AUTOMATIC OR BY A READILY ACCESSIBLE WALL MOUNTED PUSHBUTTON TO RELEASE THE LOCK WITHIN 5' OF THE DOOR.

INTEGRATION WITH FIRE ALARM
ALL MAGNETIC LOCKS SHALL BE UNLOCKED DURING A GENERAL FIRE ALARM. THIS ACTION IS NOT REQUIRED IF SYSTEM IS IN ALARM BY MEANS OF A MANUAL PULL STATION. AUTOMATIC DETECTION DEVICES SUCH AS SMOKE DETECTORS OR SPRINKLER FLOW REQUIRE UNLOCKING AND THE DOOR MUST REMAIN UNLOCKED UNTIL FIRE ALARM SYSTEM RESET. CONTRACTOR SHALL INCLUDE ALL FIRE ALARM INTERFACE EQUIPMENT SUCH AS ADDRESSABLE CONTROL MODULES OR BY CONTACT CLOSURE SIGNALING TO THE ACCESS CONTROL PANELS AS NECESSARY TO MEET THE CODE REQUIREMENTS. ALL DOORS IN STAIRWELLS MUST ALLOW FOR RE-ENTRY.

TO ENSURE A COMPLETE AND OPERATING ACCESS CONTROL SYSTEM AND TO ELIMINATE DELAYS, INSUFFICIENT OR UNNECESSARY WORK BY ALL OF THE ENTITIES INVOLVED, THE FOLLOWING STEPS SHALL BE COMPLETED. THE FAILURE TO DO SO RESULTING IN ADDED COSTS AND LOST TIME WILL BE BORN SOLELY BY THE CONTRACTOR. NO ADDITIONAL PAYMENTS WILL BE MADE BY THE OWNER TO COVER WORK DESCRIBED BELOW.

DURING THE BIDDING PROCESS:
1. THE ELECTRICAL CONTRACTOR SHALL REVIEW THE FLOORPLAN DRAWINGS AND DETAILS ON THIS SHEET. THE FLOORPLANS WILL INDICATE WHICH DOORS HAVE ACCESS CONTROL EQUIPMENT REQUIRING ROUGH-IN. DEVICE LOCATIONS REQUIRING JUNCTION BOXES WILL BE SHOWN ON THE FLOORPLANS, BUT ALL CONDUIT AND HARDWARE REQUIREMENTS CAN ONLY BE DETERMINED BY REFERRING TO THE SPECIFIC DOOR ROUGH-IN DETAILS AND THE ARCHITECTURAL DOOR HARDWARE SPECIFICATION. ANY DISCREPANCIES SHALL BE BROUGHT TO THE ATTENTION OF THE ENGINEER FOR CLARIFICATION.
2. THE ELECTRICAL CONTRACTOR SHALL REVIEW THE ARCHITECTURAL DOOR HARDWARE SCHEDULE, DOOR HARDWARE SPECIFICATIONS, AND DEFINED EGRESS PATHS. IDENTIFY ACCESS CONTROLLED DOORS LOCATED IN FIRE RATED WALLS AND IN PATHS OF EGRESS REQUIRING ADDITIONAL CONTROL DEVICES.
3. THE ELECTRICAL CONTRACTOR SHALL VERIFY WHICH DOORS USING AN ELECTRIFIED EXIT DEVICE WILL REQUIRE 120V AT THE DOOR. THIS IS MANUFACTURER SPECIFIC AND MUST BE CONFIRMED WITH THE GENERAL CONTRACTOR ACCORDING TO WHICH HARDWARE SUPPLIER BEING USED.

POST-BID, DURING THE SUBMITTAL PROCESS:

4. DURING THE SUBMITTAL PROCESS, THE ELECTRICAL CONTRACTOR SHALL REVIEW THE APPROVED DOOR HARDWARE SUBMITTAL TO CONFIRM THE FINAL HARDWARE SETS PRIOR TO ANY ROUGH-IN. ANY QUESTIONS SHALL BE ISSUED BY FORMAL RFI.
5. MEET WITH THE ACCESS CONTROL VENDOR TO REVIEW ALL FINAL INTEGRATION AND ROUGH-IN REQUIREMENTS. ONLY AFTER CONFIRMING THE FINAL DOOR HARDWARE AND ACCESS CONTROL SYSTEM REQUIREMENTS SHALL ANY ROUGH-IN WORK BEGIN.

GENERAL NOTES:

1. THE DOOR DETAILS SHOWN BELOW ARE GENERAL ROUGH-IN DETAILS AND NOT ALL DEVICES SHOWN MAY BE PRESENT FOR EACH DOOR. CONTRACTOR SHALL REFER TO THE DOOR HARDWARE SCHEDULE IN THE ARCHITECTS DRAWINGS AND SPECS TO DETERMINE WHAT DEVICES ARE PRESENT FOR EACH DOOR REQUIRING CARD ACCESS DOOR EQUIPMENT.
2. NOT ALL DOOR STYLE DETAILS SHOWN BELOW MAY BE INCLUDED IN THE PROJECT.
3. ALL CONDUIT SHALL BE CONCEALED UNLESS SPECIFICALLY NOTED OTHERWISE ON THE DRAWINGS.
4. THE DOOR ROUGH-IN INFORMATION SHOWN ON THESE DRAWINGS ARE SCHEMATIC IN NATURE AND CANNOT ACCOUNT FOR ALL SPECIFIC VENDOR REQUIREMENTS, OR ACTUAL DOOR HARDWARE PROVIDED. COORDINATE SPECIFIC LOCATIONS WITH SECURITY CONTRACTOR AND APPROVED DOOR HARDWARE SCHEDULES PRIOR TO ROUGH-IN. CONTRACTOR IS RESPONSIBLE FOR A COMPLETE CONDUIT RACEWAY SYSTEM AT THE DOOR AND BACK TO LOCAL ELECTRICAL ROOM.
5. IF REX IS NOT INCLUDED IN DOOR HANDLE OR EXIT DEVICE, PROVIDE BOX FOR WALL MOUNTED REX DEVICE. VERIFY WITH DOOR HARDWARE PRIOR TO ROUGH-IN.
6. PROVIDE CONDUIT AND DEVICE BACK BOX ROUGH-IN AT ALL CARD READER DOOR LOCATIONS. CONDUIT SHALL BE 3/4" UNLESS OTHERWISE NOTED AND ALL BOXES SHALL BE 4 SQUARE WITH A SINGLE GANG MUD RING FOR DEVICES OR JUST A SINGLE GANG BOX IF INSTALLED AT THE DOOR FRAME.
7. A SINGLE FIRE ALARM CONTROL MODULE MAY BE USED TO CONTROL THE POWER TO MULTIPLE DOORS IF COORDINATED WITH THE ACCESS CONTROL SYSTEM VENDOR TO WIRE DOORS SEPARATE FROM OTHER DOORS TOGETHER ON THE SAME POWER SUPPLY LOOP.
8. IF NO ACCESSIBLE CEILING SPACE IS NEAR THE CONTROLLED DOOR, ALL CONDUITS ARE TO BE RUN CONTINUOUS TO THE DOOR ACCESS CONTROL PANEL UNLESS A LOCATION IS DETERMINED TO BE ACCEPTABLE TO THE ENGINEER PRIOR TO INSTALLATION.

GENERAL NOTES:

1. IF DOOR IS TO BE GROUTED MAKE SURE EPT MORTAR BOX IS IN PLACE AND CONDUIT CONNECTED AND SEALED.
2. IF DOOR IS TO BE EQUIPPED WITH AUTOMATIC DOOR OPERATOR, THOSE ROUGH-IN PROVISIONS SHALL BE IN ADDITION TO THESE REQUIREMENTS. AUTOMATIC DOOR OPERATORS SHALL HAVE COMPLETE RUN FROM ITS CONTROL PANEL TO THE DOOR ACCESS CONTROL PANEL AND INCLUDE 120V POWER.
3. IF NO ACCESSIBLE CEILING SPACE IS NEAR THE CONTROLLED DOOR, ALL CONDUITS ARE TO BE RUN CONTINUOUS TO THE DOOR ACCESS CONTROL PANEL OR A LOCATION APPROVED BY THE OWNER.
4. FOR DOUBLE DOORS, DUPLICATE THE ROUGH-IN.
5. DOOR HARDWARE SCHEDULE DETERMINES ACTUAL ROUGH-IN REQUIREMENTS.

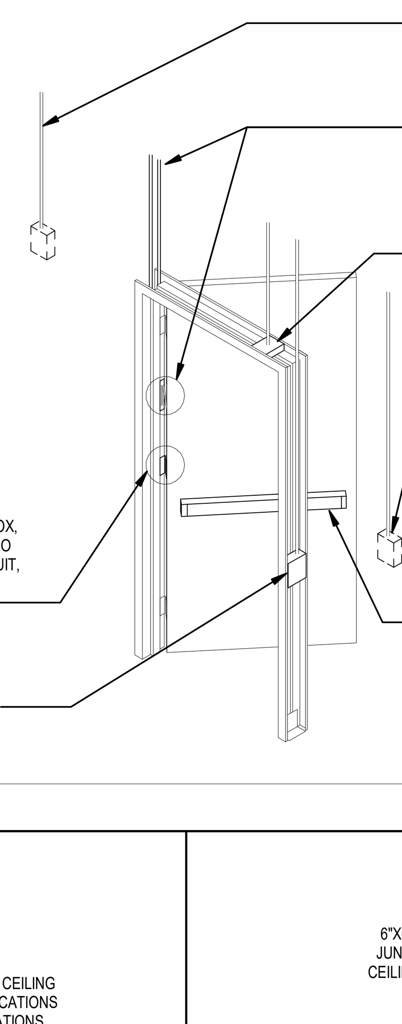

8 TYPICAL BOX AND CONDUIT REQUIREMENTS ROUGH-IN DETAIL
SCALE: NTS

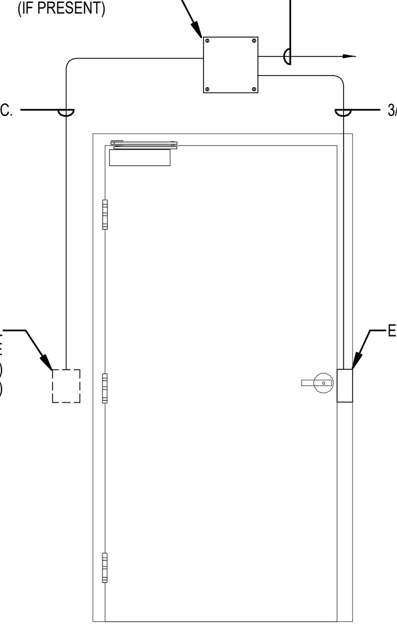

3 TYPICAL ELECTRIC STRIKE ROUGH-IN DETAIL
SCALE: NTS

S (SYMBOL)

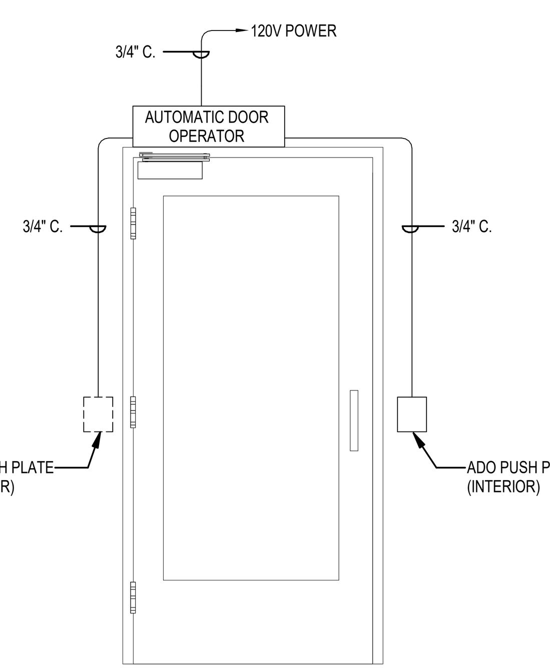

4 TYPICAL AUTOMATIC DOOR OPERATOR ROUGH-IN DETAIL
SCALE: NTS

ADO (SYMBOL)

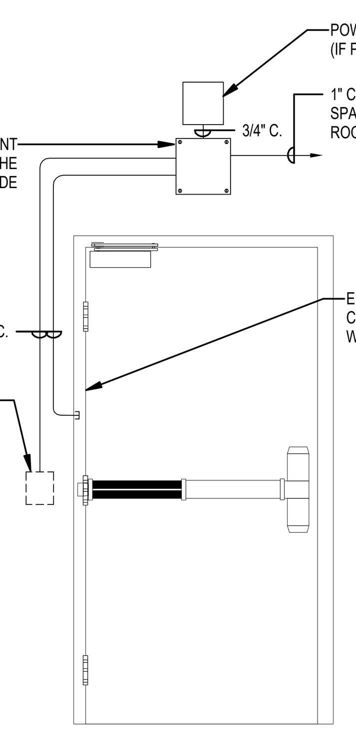

7 TYPICAL ELECTRIFIED PANIC HARDWARE ROUGH-IN DETAIL
SCALE: NTS

EP (SYMBOL)

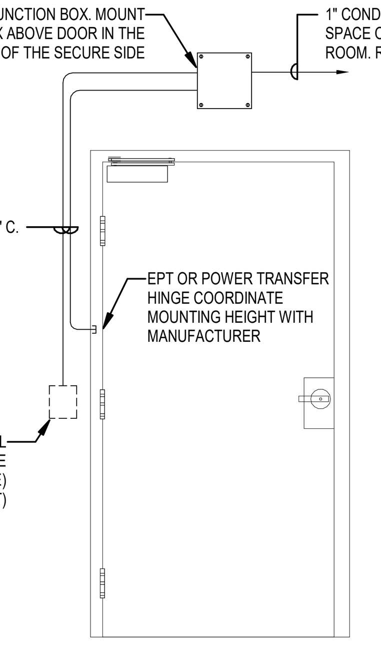

5 TYPICAL ELECTRIFIED LEVER ROUGH-IN DETAIL
SCALE: NTS

EL (SYMBOL)

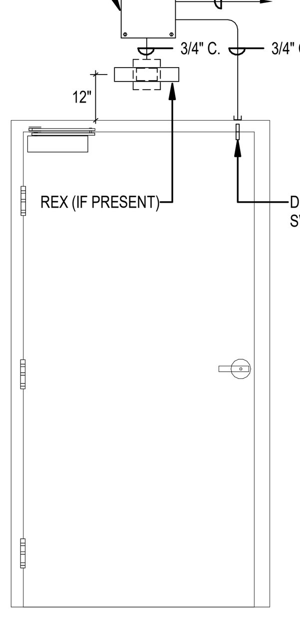

2 TYPICAL DOOR POSITION SWITCH ROUGH-IN DETAIL
SCALE: NTS

D (SYMBOL)

Babcock Design

Salt Lake City
52 Exchange Place
Salt Lake City, UT 84111
801.531.1144

Boise
800 W Main Street, Suite 940
Boise, ID 83702
208.424.7675

babcockdesign.com

Consultant

ENVISION ENGINEERING
240 E. MORRIS AVE. SUITE 200
SALT LAKE CITY, UT 84115
P (801) 534-1130
www.envisioneng.com

ENV:2025-252

CITY OF ALPINE

ALPINE FIRE STATION

50 E 100 N ALPINE, UT 84004

Revisions

Num.	Description	Date

Project Number	25116
Original Issue	04.16.2026
Project Status	CONSTRUCTION DOCUMENTS

The information and content represented herein is considered by law the architect's instruments of service and are the property of Babcock Design. They are available for limited review and evaluation by clients, consultants, contractors, government agencies, vendors, and office personnel only in accordance with this notice. They are intended for use only for the project specified and are to be used for no other purpose or project including additions to or modification of the completed project. No part thereof may be copied, reproduced, photographed, modified, published, uploaded, transmitted, disclosed, sold, distributed to others in any way including in digital form, or otherwise used without the prior written consent of Babcock Design.

COPYRIGHT © 2025 BABCOCK DESIGN

Stamp

PROFESSIONAL ENGINEER 9808039-2202 ALEKSANDAR RANKOVIC STATE OF UTAH
04/16/2026

Sheet Title

ACCESS CONTROL DOOR ROUGH-IN DETAILS

Sheet Number

EG506

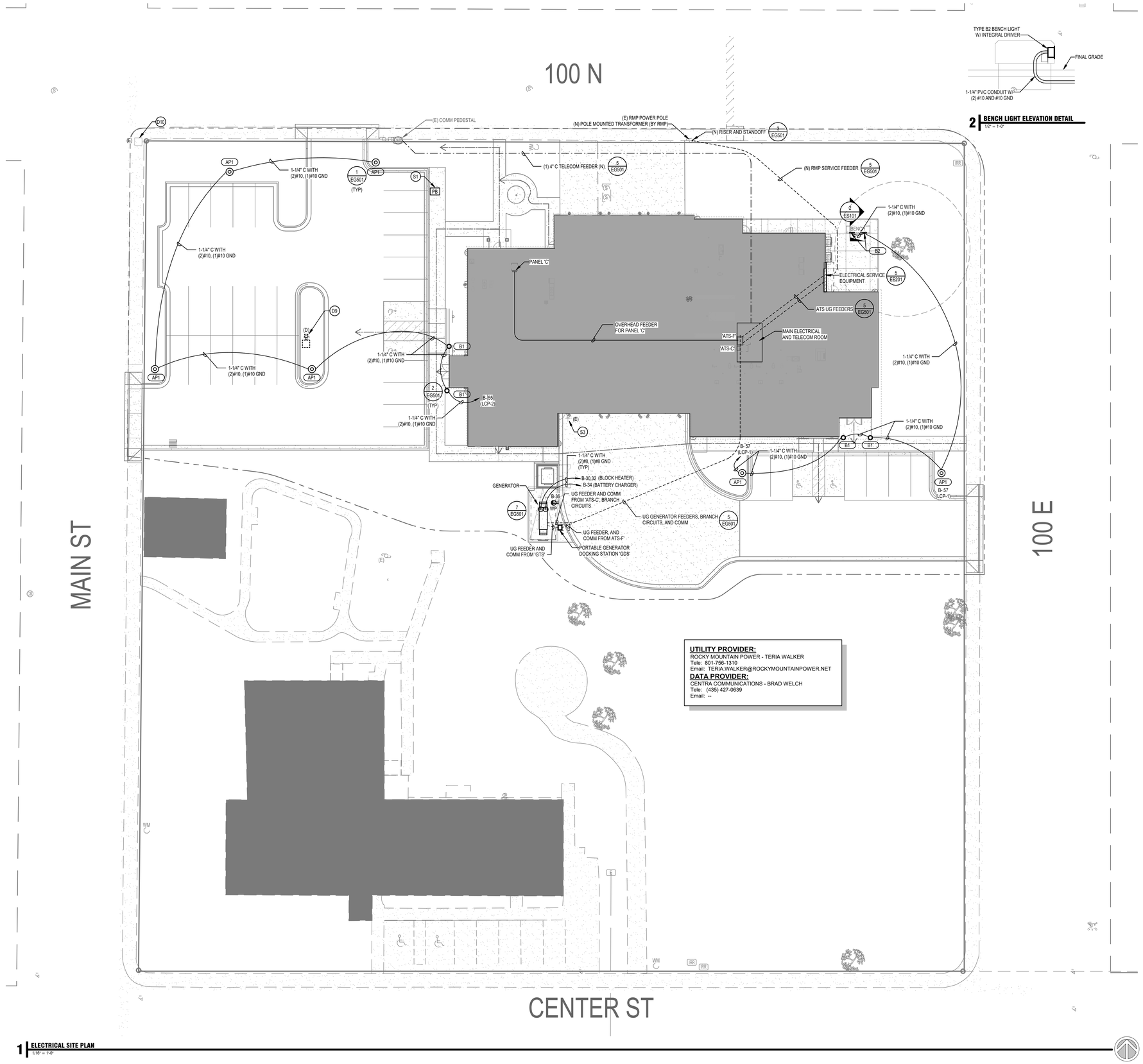

1 ELECTRICAL SITE PLAN
1/16" = 1'-0"

2 BENCH LIGHT ELEVATION DETAIL
1/2" = 1'-0"

UTILITY PROVIDER:
ROCKY MOUNTAIN POWER - TERIA WALKER
Tele: 801-756-1310
Email: TERIA.WALKER@ROCKYMOUNTAINPOWER.NET

DATA PROVIDER:
CENTRA COMMUNICATIONS - BRAD WELCH
Tele: (435) 427-0639
Email: --

SITE GENERAL NOTES:

1. PROVIDE ALL REQUIRED BACKFILLING, ETC. FOR ALL CONDUITS, PROVIDE REQUIRED BACKFILL MATERIAL AS DIRECTED BY EACH UTILITY.
2. COORDINATE ALL LOCATIONS AND ROUTING WORK IN THE FIELD.
3. ROUTE CONDUITS A MINIMUM OF 6" BELOW THE BUILDING FLOOR SLAB.
4. MINIMUM CONDUIT FOR SITE WORK SHALL BE 1".
5. CONDUIT ROUTING SHOWN IS SCHEMATIC AND FOR CLARIFICATION COORDINATE LOCATION WITH ALL AFFECTED TRADES.
6. PROVIDE A MINIMUM OF 12" SEPARATION BETWEEN POWER AND COMMUNICATION CONDUITS.
7. ALL CONDUITS THAT EXTEND THROUGH CONCRETE SHALL BE GRC OR HDPE OR FIBERGLASS AND WRAPPED WITH TWO (2) LAYERS OF PVC TAPE.
8. ALL ELBOWS THAT ARE UNDER THE FINISHED GRADE SHALL BE GRC OR HDPE OR FIBERGLASS AND WRAPPED WITH TWO (2) LAYERS OF PVC TAPE.
9. ALL SITE LIGHTING AND SITE BRANCH CIRCUITS TO BE MINIMUM #10 AWG COPPER. UPSIZE CONDUIT AND WIRE FURTHER AS REQUIRED FOR VOLTAGE DROP, TO MAINTAIN NO MORE THAN 5% FROM SERVICE.

GENERAL DEMOLITION NOTES:

1. UNLESS SPECIFICALLY NOTED OTHERWISE, REMOVE ALL ELECTRICAL ITEMS SHOWN IN DARK AND DASHED LINES. LIGHT AND SOLID ITEMS ARE TO REMAIN. DEMOLITION ITEMS ARE SHOWN TO GIVE A BASIC DESCRIPTION OF THE EXTENT OF DEMOLITION WORK, BUT MAY NOT BE INCLUSIVE. PROVIDE DEMOLITION WORK IN ACCORDANCE WITH THE FOLLOWING REQUIREMENTS:
   - A. DISCONNECT AND REMOVE ANY/ALL FIXTURES, DEVICES, EQUIPMENT, ETC. REQUIRED FOR PROPER COMPLETION OF THE WORK WHETHER SHOWN OR NOT.
   - B. RELOCATE, REWIRE, AND/OR RECONNECT ANY/ALL FIXTURES, DEVICES, EQUIPMENT, ETC. THAT FOR ANY REASON OBSTRUCTS CONSTRUCTION.
   - C. LEAVE ALL EXISTING FIXTURES, DEVICES, EQUIPMENT, ETC. IN PORTIONS OF THE BUILDING NOT BEING REMODELED, IN WORKING CONDITION. RESTORE ALL INTERRUPTED BRANCH CIRCUITS, FEEDERS, ETC.
   - D. REMOVE AND DISPOSE OF ALL RACEWAYS, CONDUCTORS, BOXES, DEVICES, EQUIPMENT, ETC. THAT ARE NOT TO BE REUSED. TERMINATE AT ACCESSIBLE JUNCTION BOX BY PROVIDING PROPER KNOCK-OUT CLOSURE, TAPE CONDUCTORS, LABEL AS "SPARE" WITH CIRCUIT NO., ZONE NO, OR OTHER CHARACTERISTIC IDENTIFYING SOURCE.
   - E. EXISTING RACEWAYS MAY BE REUSED, IF IN PLACE, WHERE POSSIBLE, AND WHERE IN COMPLIANCE WITH THE SPECIFICATIONS AND THE INTENT OF THE CONTRACT DOCUMENTS. UPGRADE AND OR PROVIDE NEW CONDUIT SUPPORTS WHERE NECESSARY FOR ALL RACEWAYS BEING REUSED. ENSURE INTEGRITY OF EXISTING RACEWAYS BEFORE REUSE.
   - F. CONCEAL ALL RACEWAY AND WIRING IN EXISTING WALLS, CEILINGS, FLOORS, ETC. THE USE OF WIREMOLD IS PERMITTED ONLY WHERE SPECIFICALLY NOTED ON DRAWING.
   - G. DO NOT PENETRATE STRUCTURAL ELEMENTS OF FLOORS, WALLS, CEILINGS, ROOFS, ETC.
   - H. COORDINATE WITH OWNER WHAT EQUIPMENT SHOULD BE DISPOSED OF AND WHAT EQUIPMENT IS TO BE RETURNED TO OWNER.
   - I. FIRE ALARM SYSTEM MUST REMAIN OPERATIONAL DURING ALL PHASES OF CONSTRUCTION.

UTILITY COORDINATION REQUIREMENTS:

THE ELECTRICAL CONTRACTOR SHALL COORDINATE AND VERIFY ALL REQUIREMENTS AND LOCATIONS TO EXTEND CONDUITS FOR UTILITY USE WITHIN 2 WEEKS OF THE CONTRACT AWARD. THE CONTRACTOR SHALL NOT ROUGH-IN ANY CONDUITS UNTIL THE UTILITY COORDINATION IS COMPLETE AND ALL LOCATIONS ARE KNOWN. THE CONTRACTOR SHALL PROVIDE THE ARCHITECT AND THE ENGINEER A WRITTEN SIGNED STATEMENT, INCLUDING A SKETCH OF LOCATIONS, FROM THE UTILITY COMPANY NOTIFYING THEM THAT THEY HAVE COORDINATED AND VERIFIED ALL REQUIREMENTS. IF THE CONTRACTOR DOES NOT COORDINATE AND VERIFY THE REQUIREMENTS WITH THE UTILITIES OR PROVIDE A WRITTEN STATEMENT FROM THE UTILITY COMPANY TO THE ARCHITECT AND ENGINEER ALL CHANGES DO TO LACK OF COORDINATION WILL BE DONE AT NO ADDITIONAL EXPENSE TO THE OWNER.

THE ELECTRICAL CONTRACTOR SHALL ORGANIZE A PRE-CONSTRUCTION MEETING INCLUDING THE UTILITY AND GENERAL CONTRACTOR TO COORDINATE AND VERIFY ALL REQUIREMENTS, WITHIN 2 WEEKS OF THE CONTRACT AWARD. COORDINATION ITEMS INCLUDE BUT ARE NOT LIMITED TO:

- GENERAL UTILITY REQUIREMENTS AND DIVISION OF SCOPE OF WORK
- CONDUIT AND TRENCHING REQUIREMENTS
- CONDUIT ROUTING
- UTILITY EQUIPMENT PADS AND SUB-BASE REQUIREMENTS
- UTILITY CLEARANCE REQUIREMENTS
- EQUIPMENT SCREEN WALLS, EQUIPMENT ENCLOSURES, AND EQUIPMENT YARDS
- COORDINATION WITH OTHER UTILITIES OR EXISTING CONDITIONS
- AVAILABLE FAULT CURRENT CALCULATIONS (POWER UTILITY ONLY)
- UTILITY REQUIRED SITE OBSERVATIONS
- SCHEDULING OF UTILITY INSTALLATIONS

THE CONTRACTOR SHALL NOT ROUGH-IN ANY CONDUITS, EQUIPMENT PADS, OR SIMILAR ITEMS UNTIL THE UTILITY COORDINATION IS COMPLETE AND ALL THE LOCATIONS ARE KNOWN. THE CONTRACTOR SHALL PROVIDE THE ARCHITECT AND ENGINEER A WRITTEN, SIGNED STATEMENT, INCLUDING A SKETCH OF EQUIPMENT AND CONDUIT LOCATIONS, FROM THE UTILITY COMPANY NOTIFYING THEM THAT THEY HAVE COORDINATED AND VERIFIED ALL REQUIREMENTS WITH THE UTILITIES AND PROVIDE A WRITTEN STATEMENT FROM THE UTILITY COMPANY TO THE ARCHITECT AND ENGINEER, ALL CHANGES DUE TO LACK OF COORDINATION WILL BE PROVIDED AT NO ADDITIONAL EXPENSE TO THE OWNER.

UTILITY REQUIREMENTS:

1. BURY CONDUITS PER UTILITY REQUIREMENTS. REFER TO SITE DETAIL SHEETS FOR TRENCHING REQUIREMENTS.
2. VERIFY AND COMPLY WITH ALL POWER UTILITY AND LOCAL REQUIREMENTS.
3. INCLUDE IN BID ALL LINE EXTENSION FEES, UNDERGROUND FEES, AND ALL MISC. FEES CHARGED BY POWER UTILITY AND LOCAL ISP.
4. ALL 90 DEGREE BENDS MUST HAVE 36" RADIUS MINIMUM SWEEP.
5. ELBOWS ON THE PRIMARY SIDE OF THE UTILITY TRANSFORMER MUST BE PVC MATERIAL.
6. ALL CONDUIT TERMINATIONS SHALL UTILIZE PLASTIC BUSHINGS AND BE SEALED TO PREVENT DEBRIS FROM PLUGGING THE END.
7. ALL STREETLIGHT CONDUITS SHALL BE 3".
8. ALONG WITH CONDUITS EXTENDING TO SECONDARY JUNCTION BOXES, EACH TRANSFORMER PAD AND SECONDARY BOX SHALL HAVE (10) FOOT CONDUIT STUB-OUTS FOR INTERCONNECTION TO ADJACENT HOMES.
9. PRIOR TO BACKFILLING, THE CONTRACTOR MUST NOTIFY THE POWER COMPANY (435-654-2913) FOR TRENCH INSPECTION AND GPS OF CONDUITS.
10. POWER WILL NOT BE CONNECTED UNLESS A TRENCH INSPECTION HAS BEEN PERFORMED AND APPROVED.
11. USE ONLY RIGID GALVANIZED STEEL OR GRAY ELECTRICAL GRADE PVC CONDUIT FOR PRIMARY AND SECONDARY FEEDERS INCLUDING STREETLIGHTING.

KEYED NOTES

D9 DEMOLISH POLE LIGHT AND ASSOCIATED CONDUIT AND CONDUCTORS BACK TO ORIGINATION POINT.

D10 PROTECT AND MAINTAIN EXISTING LIGHT FIXTURE ON UTILITY POLE.

S1 PROVIDE 1" CONDUIT FOR FUTURE EV CHARGER COMMS TO MEP ROOM AND (1) 1-1/4" CONDUIT FOR FUTURE EV CHARGER POWER TO PANEL C. PROVIDE PULL STRING AND LABEL CONDUIT IN EQUIPMENT ROOMS "FOR EV CHARGER". LOCATE IN-GRADE BOX AS REQUIRED TO LEAVE ROOM BETWEEN STALLS FOR FUTURE EV CHARGER.

S3 EXTEND EXISTING CONDUIT(S) FOR EXISTING TO REMAIN ANTENNA TO NEW COMMUNICATIONS ROOM. MOPA TO RUN AND TERMINATE CABLING AS NECESSARY TO RESTORE FULL FUNCTIONALITY.

Babcock Design

Salt Lake City
52 Exchange Place
Salt Lake City, UT 84111
801.531.1144

Boise
800 W Main Street, Suite 940
Boise, ID 83702
208.424.7675

babcock**design**.com

Consultant

ENVISION ENGINEERING
240 E. MORRIS AVE. SUITE 200
SALT LAKE CITY, UT 84115
P (801) 534-1130
www.envisioneng.com
ENV:2025-252

CITY OF ALPINE

ALPINE FIRE STATION

50 E 100 N ALPINE, UT 84004

Revisions

Num.	Description	Date

Project Number	25116
Original Issue	04.16.2026
Project Status	CONSTRUCTION DOCUMENTS

The information and content represented herein is considered by law the architect's instruments of service and are the property of Babcock Design. They are available for limited review and evaluation by clients, consultants, contractors, government agencies, vendors, and office personnel only in accordance with this agreement. Any unauthorized use, including but not limited to reproduction or modification of this document or project including additions to or modification of the completed project, for-put thereof may be copied, reproduced, photographed, modified, published, uploaded, transmitted, disclosed, sold, distributed to others in any way including in digital form, or otherwise used without the prior written consent of Babcock Design.

COPYRIGHT © 2025 BABCOCK DESIGN

Stamp

PROFESSIONAL ENGINEER
9808039–2202
ALEKSANDAR RANKOVIC
STATE OF UTAH
04/16/2026

Sheet Title

SITE PLAN - ELECTRICAL

Sheet Number

ES101

Current as of: 4/15/2026 2:18:51 PM
Original drawing is 30" x 42". Autodesk Docs://25116 - ALPINE FIRE STATION 2026/2025-269-ELEC_CENTRAL_V25.rvt

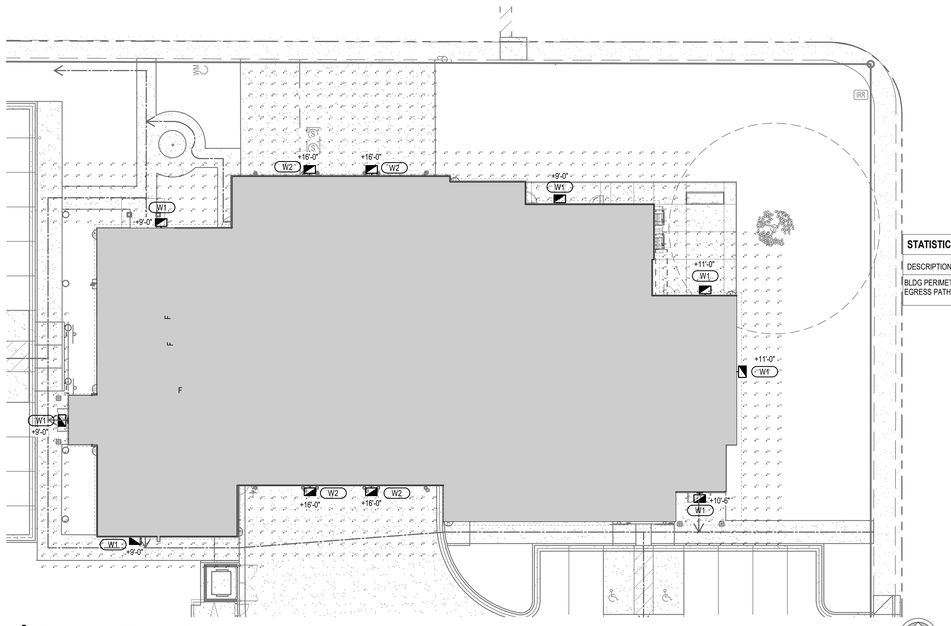

STATISTICS

DESCRIPTION	AVG	MAX	MIN	MAX/ MIN	AVG/ MIN
BLDG PERIMETER & EGRESS PATHWAYS	0.9 fc	2.7 fc	0.1 fc	27:1	9:1

2 PHOTOMETRY - EMERGENCY POWER
1/16" = 1'-0"

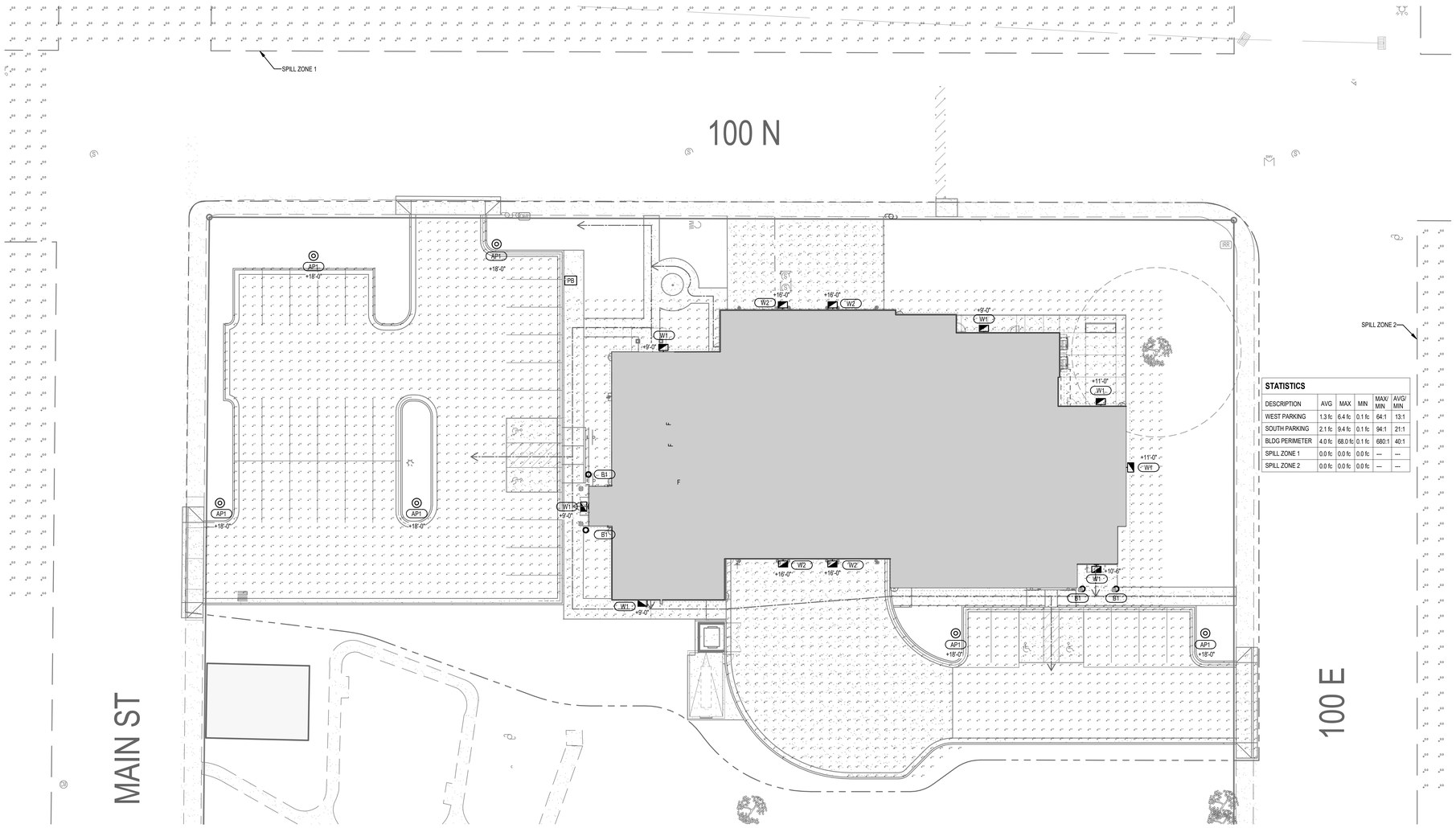

STATISTICS

DESCRIPTION	AVG	MAX	MIN	MAX/ MIN	AVG/ MIN
WEST PARKING	1.3 fc	6.4 fc	0.1 fc	64:1	13:1
SOUTH PARKING	2.1 fc	9.4 fc	0.1 fc	94:1	21:1
BLDG PERIMETER	4.0 fc	68.0 fc	0.1 fc	680:1	40:1
SPILL ZONE 1	0.0 fc	0.0 fc	0.0 fc	---	---
SPILL ZONE 2	0.0 fc	0.0 fc	0.0 fc	---	---

1 PHOTOMETRY - NORMAL POWER
1/16" = 1'-0"

Original drawing is 30" x 42". Autodesk Docs://25116 - ALPINE FIRE STATION 2026/2025-269-ELEC_CENTRAL_V25.rvt

Current as of: 4/15/2026 2:15:19 PM

Babcock Design

Salt Lake City
52 Exchange Place
Salt Lake City, UT 84111
801.531.1144

Boise
800 W Main Street, Suite 940
Boise, ID 83702
208.424.7675

babcock**design**.com

Consultant

ENVISION ENGINEERING
240 E. MORRIS AVE. SUITE 200
SALT LAKE CITY, UT 84115
P (801) 534-1130

www.envisioneng.com

ENV:2025-252

CITY OF ALPINE

ALPINE FIRE STATION

50 E 100 N ALPINE, UT 84004

Revisions

Num.	Description	Date

Project Number	25116
Original Issue	04.16.2026
Project Status	CONSTRUCTION DOCUMENTS

The information and content represented herein is considered by law the architect's instruments of service and are the property of Babcock Design. They are available for limited review and evaluation by clients, consultants, contractors, government agencies, vendors, and office personnel only in accordance with this notice. They are intended for use only for the project specified and are to be used for no other purpose or extension without the written consent of Babcock Design. Unauthorized use, sale, or distribution of these plans, reproduced, photographed, modified, published, uploaded, transmitted, disclosed, sold, distributed to others in any way including in digital form, or otherwise used without the prior written consent of Babcock Design.

COPYRIGHT © 2025 BABCOCK DESIGN

Stamp

PROFESSIONAL ENGINEER
9808039-2202
ALEKSANDAR RANKOVIC
STATE OF UTAH
04/16/2026

Sheet Title

SITE PLAN - PHOTOMETRY

Sheet Number

ES102

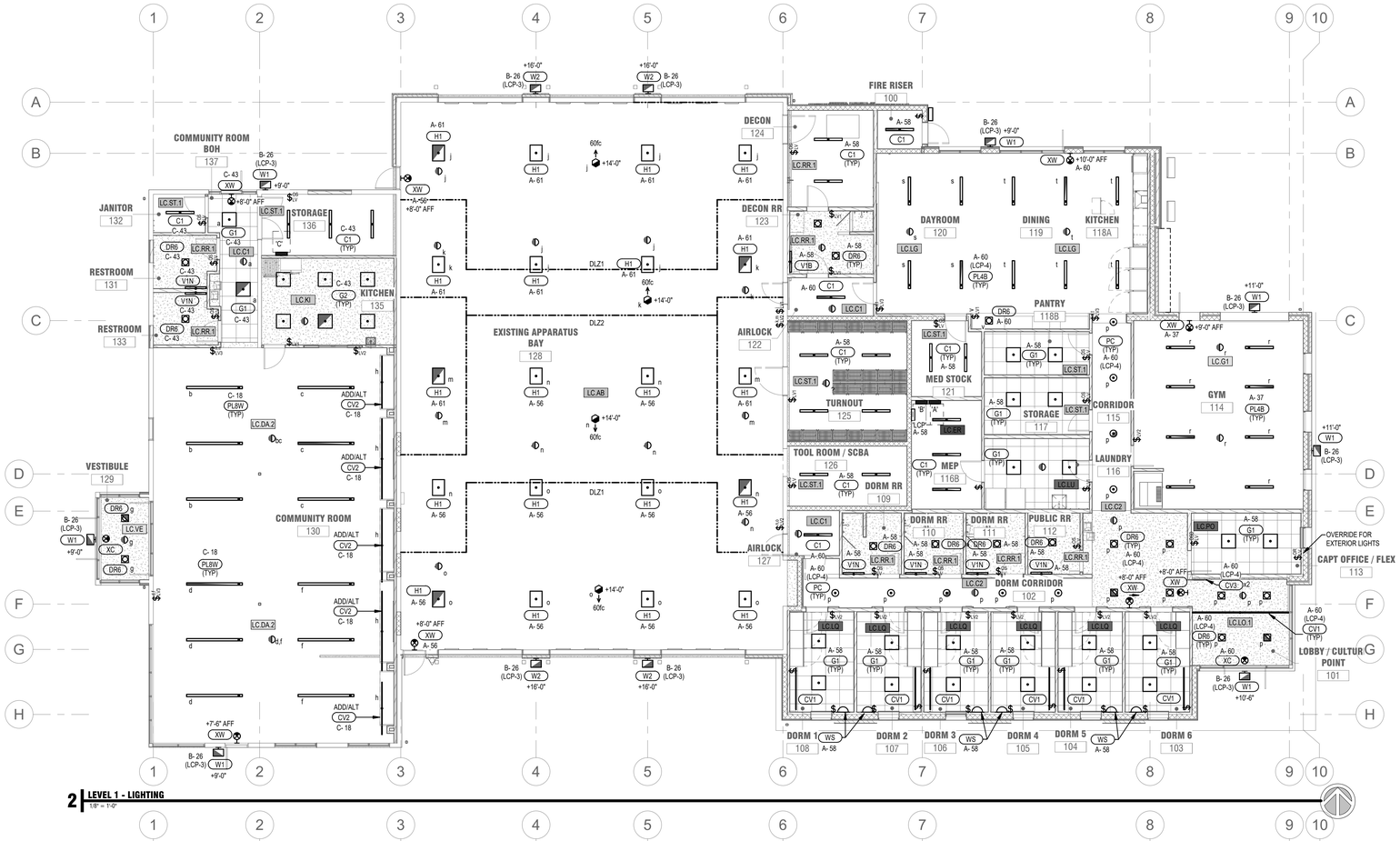

2 LEVEL 1 - LIGHTING
1/8" = 1'-0"

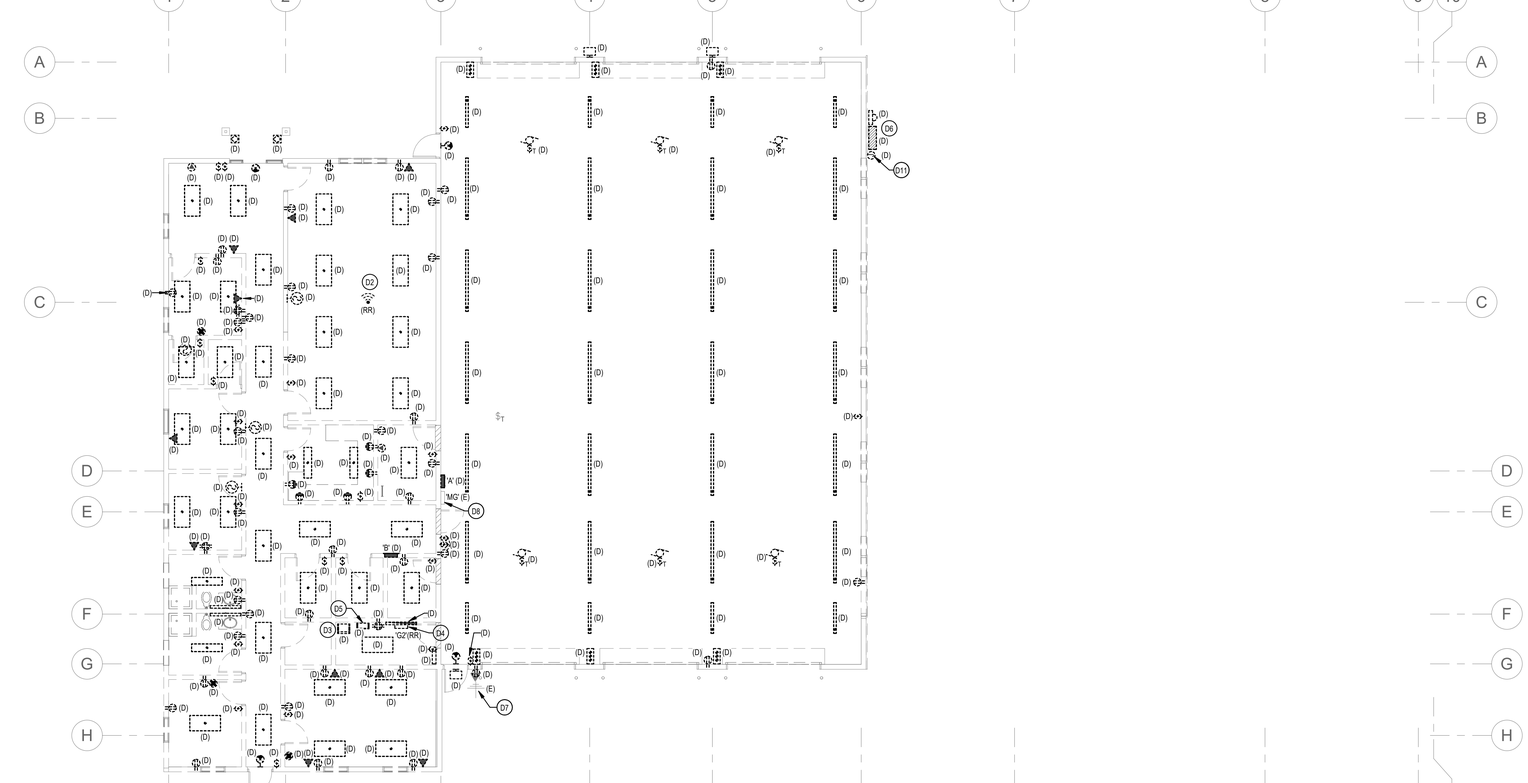

1 LEVEL 1 - DEMOLITION - ELECTRICAL
1/8" = 1'-0"

GENERAL DEMOLITION NOTES:

1. UNLESS SPECIFICALLY NOTED OTHERWISE, REMOVE ALL ELECTRICAL ITEMS SHOWN IN DARK AND DASHED LINES. LIGHT AND SOLID ITEMS ARE TO REMAIN. DEMOLITION ITEMS ARE SHOWN TO GIVE A BASIC DESCRIPTION OF THE EXTENT OF DEMOLITION WORK, BUT MAY NOT BE INCLUSIVE. PROVIDE DEMOLITION WORK IN ACCORDANCE WITH THE FOLLOWING REQUIREMENTS:
   - A. DISCONNECT AND REMOVE ANY/ALL FIXTURES, DEVICES, EQUIPMENT, ETC. REQUIRED FOR PROPER COMPLETION OF THE WORK WHETHER SHOWN OR NOT.
   - B. RELOCATE, REWIRE, AND/OR RECONNECT ANY/ALL FIXTURES, DEVICES, EQUIPMENT, ETC. THAT FOR ANY REASON OBSTRUCTS CONSTRUCTION.
   - C. LEAVE ALL EXISTING FIXTURES, DEVICES, EQUIPMENT, ETC. IN PORTIONS OF THE BUILDING NOT BEING REMODELED, IN WORKING CONDITION. RESTORE ALL INTERRUPTED BRANCH CIRCUITS, FEEDERS, ETC.
   - D. REMOVE AND DISPOSE OF ALL RACEWAYS, CONDUCTORS, BOXES, DEVICES, EQUIPMENT, ETC. THAT ARE NOT TO BE REUSED. TERMINATE AT ACCESSIBLE JUNCTION BOX BY PROVIDING PROPER KNOCK-OUT CLOSURE, TAPE CONDUCTORS, LABEL AS "SPARE" WITH CIRCUIT NO., ZONE NO, OR OTHER CHARACTERISTIC IDENTIFYING SOURCE.
   - E. EXISTING RACEWAYS MAY BE REUSED, IF IN PLACE, WHERE POSSIBLE, AND WHERE IN COMPLIANCE WITH THE SPECIFICATIONS AND THE INTENT OF THE CONTRACT DOCUMENTS. UPGRADE AND OR PROVIDE NEW CONDUIT SUPPORTS WHERE NECESSARY FOR ALL RACEWAYS BEING REUSED. ENSURE INTEGRITY OF EXISTING RACEWAYS BEFORE REUSE.
   - F. CONCEAL ALL RACEWAY AND WIRING IN EXISTING WALLS, CEILINGS, FLOORS, ETC. THE USE OF WIREMOLD IS PERMITTED ONLY WHERE SPECIFICALLY NOTED ON DRAWING.
   - G. DO NOT PENETRATE STRUCTURAL ELEMENTS OF FLOORS, WALLS, CEILINGS, ROOFS, ETC.
   - H. COORDINATE WITH OWNER WHAT EQUIPMENT SHOULD BE DISPOSED OF AND WHAT EQUIPMENT IS TO BE RETURNED TO OWNER.
   - I. FIRE ALARM SYSTEM MUST REMAIN OPERATIONAL DURING ALL PHASES OF CONSTRUCTION.

LIGHTING GENERAL NOTES:

1. REFER TO LIGHTING DETAILS SHEETS FOR TYPICAL CONTROL WIRING DIAGRAMS. PROVIDE COMPLETE SYSTEM WITH ALL REQUIRED CONDUIT, WIRING, SWITCHES, SENSORS, POWER PACK, ETC.
2. LOCATE POWER PACKS AND ROOM CONTROLLERS ABOVE ACCESSIBLE CEILING NEAR ROOM ENTRANCES.
3. CONFIRM ALL LOCATIONS OF LIGHT FIXTURES WITH ARCHITECT PRIOR TO INSTALLATION.
4. PROVIDE UNSWITCHED HOT FOR ALL EMERGENCY LIGHTS AND BATTERY PACKS.

KEYED NOTES (#)

- D2 REMOVE DEVICE AND SET ASIDE FOR REUSE. DEMOLISH ASSOCIATED CONDUCTORS AND CONDUIT BACK TO ORIGINATION POINT.
- D3 REMOVE EXISTING EQUIPMENT IN DATA CABINET, SET ASIDE AND PROTECT FOR REUSE. DEMOLISH CABINET AND ASSOCIATED EQUIPMENT CABLING AND CONDUIT.
- D4 DISCONNECT AND REMOVE DISPATCH PANEL AND RELATED EQUIPMENT. SET ASIDE AND PROTECT FOR REUSE. DEMOLISH EQUIPMENT CABLING, CONDUIT, AND TELEPHONE TERMINAL BOARD.
- D5 DISCONNECT AND REMOVE UPS, SET ASIDE AND PROTECT FOR REUSE.
- D6 RMP TO DE-ENERGIZE AND DISCONNECT SERVICE. CONTRACTOR TO DEMOLISHED PANELS, CONDUIT, AND CONDUCTORS BACK TO POWER POLE.
- D7 DISCONNECT RADIO ANTENNA FROM COMMUNICATIONS ROOM. PROTECT CABLING FOR REUSE
- D8 DISCONNECT AND DEMOLISH FEEDER FOR MAGNEGRIP EXHAUST REMOVAL SYSTEM PANEL 'MG'. PROTECT PANEL AND BRANCH FEEDERS FOR REUSE.
- D11 DISCONNECT AND DEMOLISH IRRIGATION CONTROL PANEL POWER FEEDER BACK TO ORIGINATION POINT. CONTROL PANEL TO BE RELOCATED BY OWNER.

Babcock Design

Salt Lake City
52 Exchange Place
Salt Lake City, UT 84111
801.531.1144

Boise
800 W Main Street, Suite 940
Boise, ID 83702
208.424.7675

babcock**design**.com

Consultant

ENVISION ENGINEERING
240 E. MORRIS AVE. SUITE 200
SALT LAKE CITY, UT 84115
P (801) 534-1130
www.envisioneng.com
ENV:2025-252

CITY OF ALPINE

ALPINE FIRE STATION

50 E 100 N ALPINE, UT 84004

Revisions

Num.	Description	Date

Project Number	25116
Original Issue	04.16.2026
Project Status	CONSTRUCTION DOCUMENTS

The information and content represented herein is considered by law the architect's instruments of service and are the property of Babcock Design. They are available for limited review and evaluation by clients, governmental agencies, and contractors for bidding or construction purposes on the project specified in this notice. They are intended for use only for the project specified and are to be used for no other purpose or project including additions to or modification of the completed project. No part thereof may be copied, reproduced, photographed, modified, published, uploaded, transmitted, disclosed, sold, distributed to others in any way including in digital form, or otherwise used without the prior written consent of Babcock Design.

COPYRIGHT © 2025 BABCOCK DESIGN

Stamp

PROFESSIONAL ENGINEER
#808039-2202
ALEKSANDAR RANKOVIC
STATE OF UTAH
04/16/2026

Sheet Title

DEMOLITION AND LIGHTING

Sheet Number

EE101

Current as of: 4/15/2026 2:19:19 PM
Original drawing is 30" x 42". Autodesk Docs://25116 - ALPINE FIRE STATION 2026/2025-269-ELEC_CENTRAL_V25.rvt

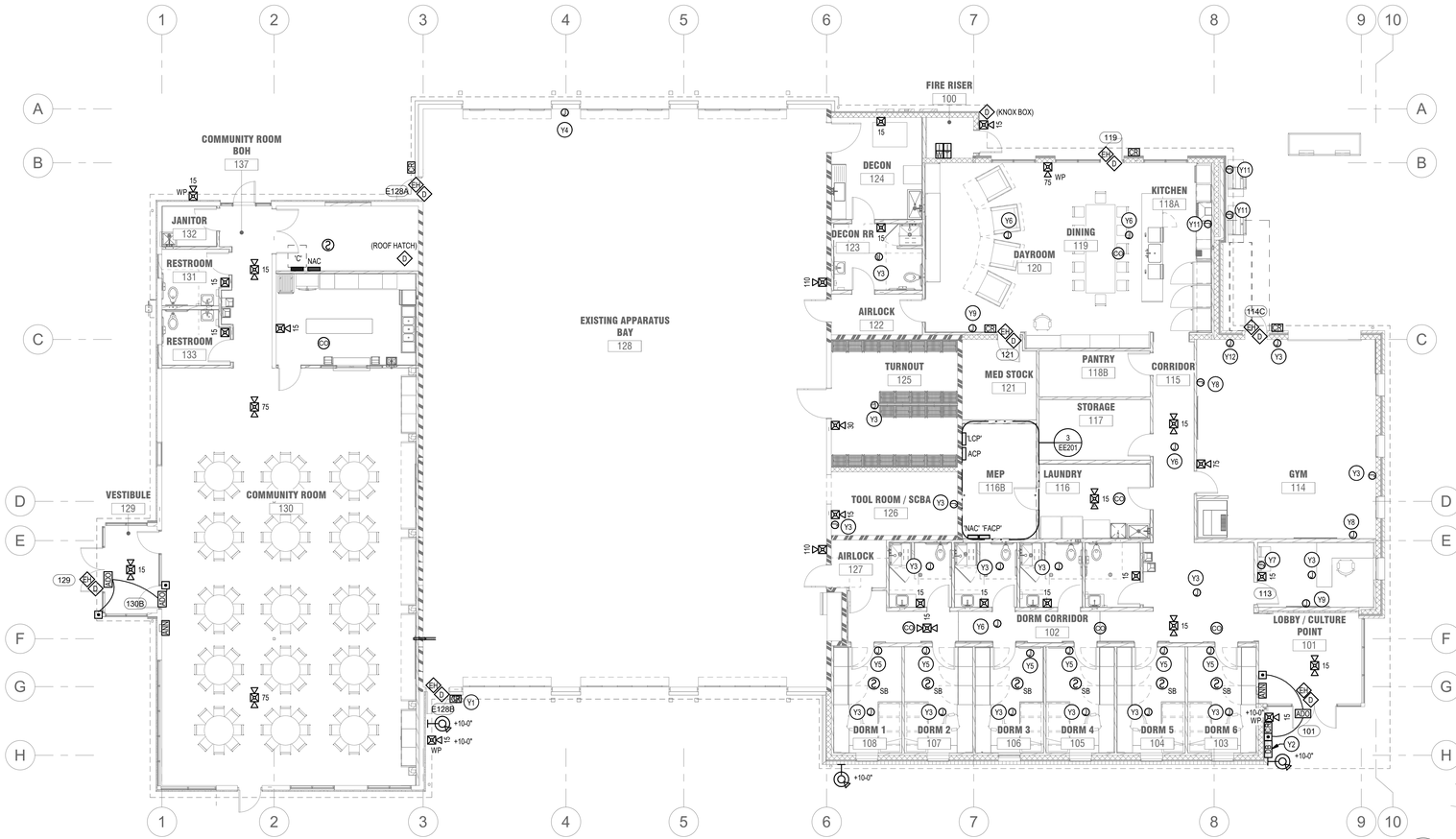

2 LEVEL 1 - SYSTEMS
1/8" = 1'-0"

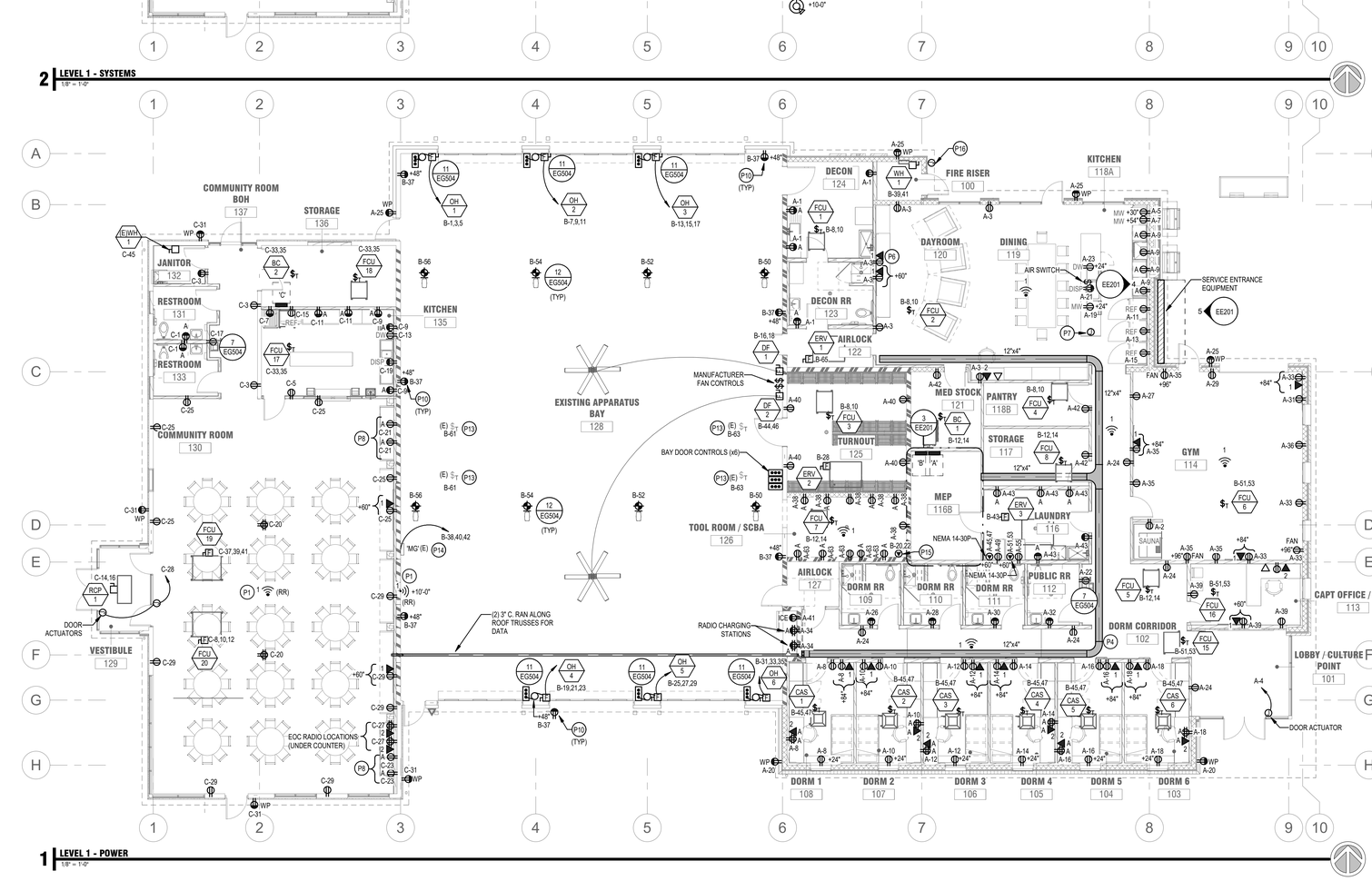

1 LEVEL 1 - POWER
1/8" = 1'-0"

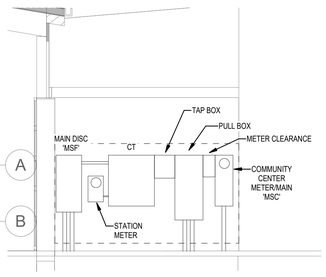

5 ELECTRICAL GEAR ELEVATION
1/4" = 1'-0"

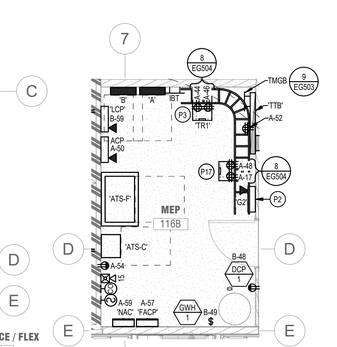

3 ENLARGED MEP 116B - ELECTRICAL
1/4" = 1'-0"

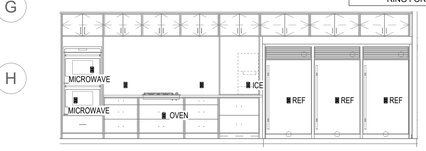

4 KITCHEN 118A ELEVATION
1/4" = 1'-0"

POWER GENERAL NOTES:

1. ALL 120V, 20AMP OUTLETS THAT ARE WITHIN 6' OF ANY SINK SHALL BE GFCI.
2. THE DIVISION 26 CONTRACTOR SHALL DETERMINE THE EXACT ROUTING OF ALL CONDUITS IN THE FIELD. THIS PLAN REPRESENTS A SCHEMATIC REPRESENTATION OF DEVICE LOCATIONS AND CONDUIT RUNS.

TELECOMMUNICATION GENERAL NOTES:

1. NO EXPOSED COMMUNICATIONS CONDUIT ALLOWED IN BUILDING UNLESS APPROVED IN ADVANCED BY OWNER/ARCHITECT.
2. ALL TELECOMMUNICATIONS OUTLETS SHALL BE LABELED IN ACCORDANCE WITH TIA/EIA 606-B. LABELING SHALL BE PROVIDED AT BOTH THE OUTLET AND THE TERMINATING END IN THE COMMUNICATIONS ROOM.
3. ALL DATA OUTLETS SHALL COMPLY WITH TIA/EIA 568. 1-D, AND TIA/EIA 569-D, AND BE WIRED IN ACCORDANCE WITH TIS/EIA T568-C.2.
4. ALL CONDUIT FOR TELECOMMUNICATIONS PURPOSES SHALL BE EMT AND SHALL BE SIZED PER ANSI/TIA/EIA 569-D. MINIMUM CONDUIT SIZE FOR ANY TELECOMMUNICATIONS CABLE SHALL BE 1". CONDUIT SHALL NOT BE FILLED TO GREATER THAN 50% OF IT'S MAXIMUM CABLE CARRYING CAPACITY.
5. THE DIVISION 27 CONTRACTOR SHALL DETERMINE THE EXACT ROUTING OF ALL CONDUITS IN THE FIELD. THIS PLAN REPRESENTS A SCHEMATIC REPRESENTATION OF DEVICE LOCATIONS. CONDUIT, AND CABLE TRAY RUNS.

SYSTEMS GENERAL NOTES:

1. COORDINATE ALL WALL MOUNTED LOCATIONS WITH THE ARCHITECT.
2. DO NOT LOCATE ANY FIRE ALARM DEVICES BEHIND DOORS OR SHELVING. REFER TO THE ARCHITECTURAL DRAWINGS FOR SHELVING LOCATIONS.
3. THE DIVISION 28 CONTRACTOR SHALL DETERMINE THE EXACT ROUTING OF ALL CONDUITS IN THE FIELD. THIS PLAN REPRESENTS A SCHEMATIC REPRESENTATION OF DEVICE LOCATIONS, AND CONDUIT RUNS.
4. ALL CONDUITS THAT TERMINATE ABOVE THE CEILING SHALL TERMINATE WITH NYLON BUSHING.
5. CONTRACTOR SHALL COORDINATE ALL CEILING MOUNTED DEVICES WITH THE LIGHTING PLANS. RELOCATE DEVICES AS NECESSARY. RELOCATED DEVICES SHALL COMPLY WITH ALL NFPA SPACING REQUIREMENTS.
6. ALL FIRE ALARM DEVICE LOCATIONS, EQUIPMENT LOCATIONS, RISER DIAGRAM, ETC., ARE SCHEMATIC IN NATURE AND ARE SHOWN TO PROVIDE INTENT OF THE FIRE ALARM SYSTEM TO BE PROVIDED. FIRE ALARM SYSTEM SUPPLIER SHALL PROVIDE BID AND SHOP DRAWINGS THAT INCLUDE A FULL CODE COMPLIANT DESIGN INCLUDING ALL NOTIFICATION AND INITIATION DEVICES REQUIRED WHETHER SHOWN OR NOT.

KEYED NOTES (#)

P1 RELOCATE EXISTING DEVICE TO THIS LOCATION. RUN NEW CONDUIT AND CONDUCTORS AS NECESSARY TO RESTORE DEVICE TO FULL FUNCTIONALITY.

P2 RELOCATE AND DISPATCH PANEL AND RELATED EQUIPMENT TO NEW TELEPHONE TERMINAL BOARD. RUN NEW CONDUIT AND CONDUCTORS AS NECESSARY TO RESTORE PANEL TO FULL FUNCTIONALITY.

P3 RELOCATE DATA EQUIPMENT AND UPS FROM DEMOLISHED CABINET AND IT SPACE TO NEW RACK. RUN NEW CONDUIT AND CONDUCTORS AS NECESSARY TO RESTORE EQUIPMENT TO FULL FUNCTIONALITY.

P4 PROVIDE BASKET TYPE CABLE TRAY WITH SOLID BOTTOM SIZED AS SHOWN. PROVIDE BONDING JUMPER AT ALL JOINTS.

P6 PROVIDE 1.25" SMURF TUBE RACEWAY BETWEEN OUTLETS AND BACK OF TV.

P7 STUB 1" CONDUIT WITH PULL STRING FROM PANEL 'A' FOR FUTURE COUNTER ISLAND OUTLET(S).

P8 INSTALL OUTLETS IN MILLWORK. COORDINATE WORK WITH MILLWORK SUPPLIER.

P10 ELECTRICAL INSTALLATION FROM FINISHED FLOOR TO +18" A.F.F. SHALL COMPLY WITH CLASS 1 DIV 2 PER ALL NEC REQUIREMENTS. ALL CONDUIT THAT IS RUN BELOW THE FLOOR SLAB AND UP INTO EQUIPMENT, DEVICES, JUNCTION BOXES, PANELS, ETC. SHALL BE CONTINUOUS FROM THE ELBOW BELOW GRADE TO THE EQUIPMENT, ETC.

P13 RUN NEW BRANCH CIRCUIT WIRIING TO EXISTING GAS UNIT HEATERS IN APPARATUS BAY FROM NEW PANEL IN MEP ROOM. REUSE EXISTING DISCONNECT.

P14 RUN NEW FEEDER TO PANEL 'MG' FROM MEP ROOM FOR EXISTING APPARATUS BAY EXHAUST SYSTEM.

P15 VERIFY SPECIALTY OUTLET NEMA CONFIGURATION WITH NEW OWNER PROVIDED COMPRESSER.

P16 PROVIDE 120V CONTROL POWER AND DATA FOR RELOCATED IRRIGATION CONTROLS. VERIFY LOCATION WITH OWNER BEFORE ROUGH-IN.

P17 MOPA PROVIDED 2-POST RACK FOR MOPA PROVIDED EQUIPMENT.

Y1 REFER TO SPEC SECTION 087100 "DOOR HARDWARE" FOR LIST OF ELECTRIFIED HARDWARE AT THE INDICATED DOOR. REFER TO ACCESS CONTROL ROUGH-IN DETAILS FOR TYPICAL HARDWARE ROUGH-IN. COORDINATE EXACT ROUGH-IN REQUIREMENTS WITH DOOR HARDWARE SUPPLIER PRIOR TO WORK.

Y2 PROVIDE A WEATHER RATED SINGLE-GANG BOX AT ADA ACCESSIBLE HEIGHT WITH 1/2" EMT CONDUIT TO ACCESSIBLE CEILING/PLENUM SPACE OR IT ROOM. COORDINATE EXACT LOCATION WITH FIRE CHIEF.

Y3 PROVIDE 3/4" EMT CONDUIT WITH PULL STRING TO MOPA PROVIDED SPEAKER OR STROBE. ROUTE TO CABLE TRAY OR ACCESSIBLE PATHWAY BACK TO COMM ROOM. COORDINATE WITH MOPA FOR EXACT SPEAKER LOCATION.

Y4 PROVIDE 3/4" EMT CONDUIT WITH PULL STRING FROM COMM ROOM TO A SINGLE GANG BOX AT EXISTING GAMMA SIGNS.

Y5 PROVIDE 3/4" EMT CONDUIT WITH PULL STRING FROM CEILING SPACE TO A 4-GANG BOX AT +58" LOCATED ABOVE OR NEXT TO THE LIGHT SWITCH FOR THE MOPA PROVIDED DORM ROOM REMOTES.

Y6 PROVIDE 3/4" EMT CONDUIT WITH PULL STRING FROM IT ROOM TO PENDANT SPEAKER. TERMINATE IN A SINGLE-GANG BOX. COORINDATE WITH MOPA FOR EXACT LOCATION.

Y7 PROVIDE 3/4" EMT CONDUIT WITH PULL STRING FROM ACCESSIBLE CEILING/PLENUM TO A 4" SQUARE, 2-1/8" DEEP BOX WITH SINGLE-GANG MUD RING. MOUNT AT STANDARD SWITCH HEIGHT.

Y8 PROVIDE 3/4" EMT CONDUIT WITH PULL STRING AND SINGLE-GANG BOX FROM EACH STROBE LOCATION TO ACCESSIBLE PLENUM SPACE. MOUNT AT SAME HEIGHT AS FIRE ALARM STROBES AND LABELED USDD STROBES.

Y9 PROVIDE 3/4" RACEWAY OR CONDUIT FROM PLENUM CEILING TO RECESSED OUTLET ON WALL IN FIRE CHIEF OFFICE. FIRE DEPARTMENT TO DETERMINE EXACT LOCATION.

Y11 PROVIDE 1/2" OR 3/4" EMT CONDUIT FROM ACCESSIBLE CEILING/PLENUM TO A SINGLE-GANG BOX MOUNTED AT COUNTER RECEPTACLE HEIGHT FOR RESET SWITCH PROVIDED AND INSTALLED BY MOPA.

Y12 PROVIDE 3/4" EMT CONDUIT WITH PULLSTRING TO ACCESSIBLE CEILING/PLENUM TO A 4" SQUARE, 2-1/8" DEEP BOX WITH TWO-GANG MUD RING FOR VOLUME CONTROL AND BLUETOOTH RECEIVER.

Babcock Design

Salt Lake City
52 Exchange Place
Salt Lake City, UT 84111
801.531.1144

Boise
800 W Main Street, Suite 940
Boise, ID 83702
208.424.7675

babcock**design**.com

Consultant

ENVISION ENGINEERING
240 E. MORRIS AVE. SUITE 200
SALT LAKE CITY, UT 84115
P (801) 534-1130

www.envisioneng.com
ENV:2025-252

CITY OF ALPINE

ALPINE FIRE STATION

50 E 100 N ALPINE, UT 84004

Revisions

Num.	Description	Date

Project Number	25116
Original Issue	04.16.2026
Project Status	CONSTRUCTION DOCUMENTS

The information and content represented herein is considered by law the architect's instruments of service and are the property of Babcock Design. They are available for limited review and evaluation by clients, contractors, and public officials in connection with this project but may not be used for any purpose without this notice. They are intended for use only for the project specified and are to be used for no other purpose on project including additions to or modification of the completed project. No part thereof may be copied, reproduced, photographed, modified, published, transmitted, disclosed, sold, distributed to others in any way including in digital form, or otherwise used without the prior written consent of Babcock Design.

COPYRIGHT © 2025 BABCOCK DESIGN

Stamp

PROFESSIONAL ENGINEER
9808039-2202
ALEKSANDAR RANKOVIC
STATE OF UTAH
04/16/2026

Sheet Title

POWER AND SYSTEMS

Sheet Number

EE201

Current as of: 4/16/2026 2:19:25 PM
Original drawing is 30" x 42" Autodesk Docs://25116 - ALPINE FIRE STATION 2022/2025-269-ELEC_CENTRAL_V25.rvt

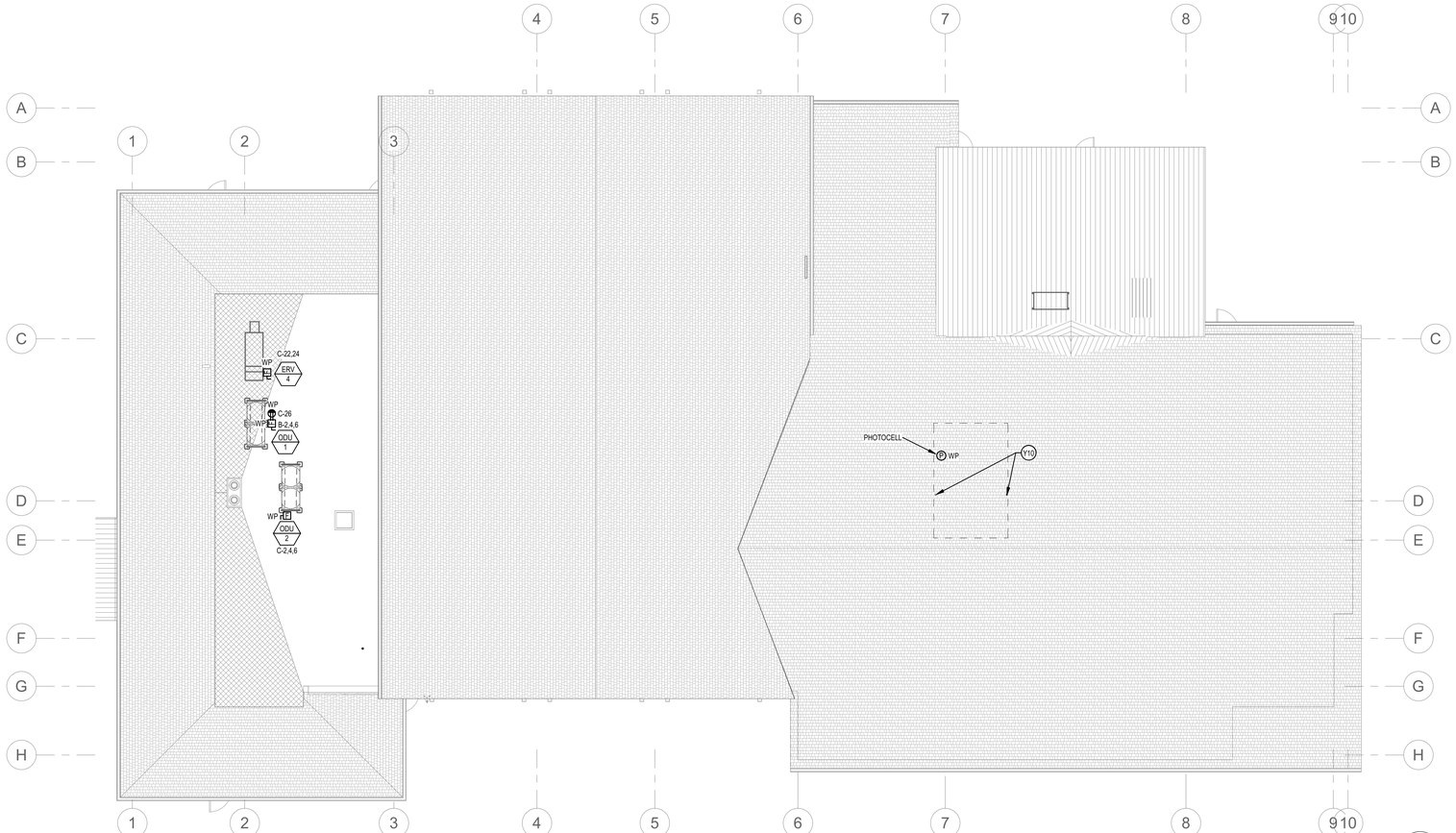

2 OVERALL ROOF - POWER PLAN
1/8" = 1'-0"

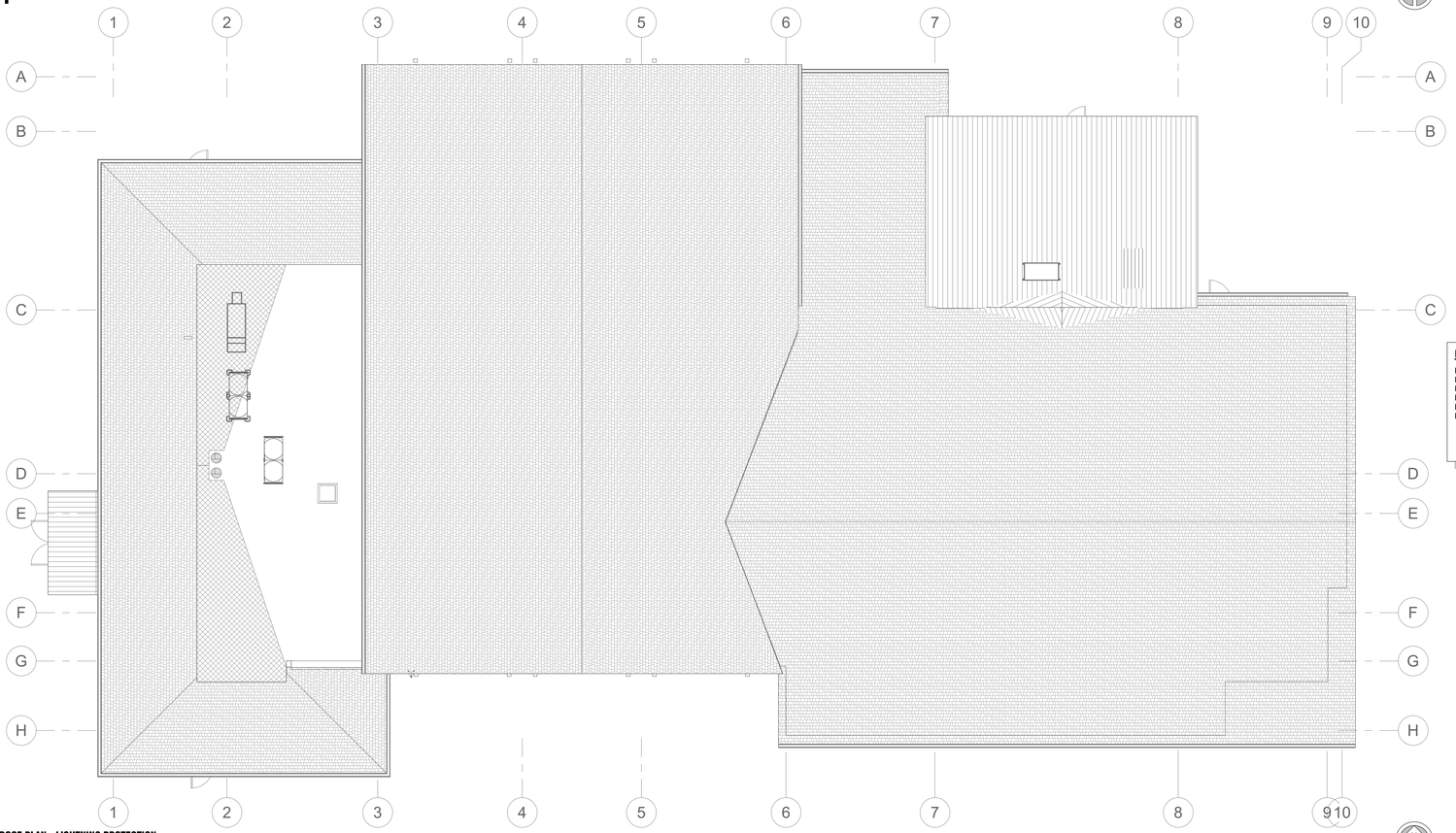

1 ROOF PLAN - LIGHTNING PROTECTION
1/8" = 1'-0"

NOTE:

PROVIDE AIR TERMINALS, CONDUCTORS, GROUND RODS ETC. AS REQUIRED PER NFPA 780, UL96, AND LIGHTNING PROTECTION SPECIFICATIONS FOR A COMPLETE LIGHTNING PROTECTION SYSTEM. TIE NEW LIGHTNING PROTECTION SYSTEM TO EXISTING SYSTEM. REFER TO LIGHTNING PROTECTION DETAILS ON SHEET EG505.

POWER GENERAL NOTES:

1. ALL 120V, 20AMP OUTLETS THAT ARE WITHIN 6' OF ANY SINK SHALL BE GFCI.
2. THE DIVISION 26 CONTRACTOR SHALL DETERMINE THE EXACT ROUTING OF ALL CONDUITS IN THE FIELD. THIS PLAN REPRESENTS A SCHEMATIC REPRESENTATION OF DEVICE LOCATIONS AND CONDUIT RUNS.

KEYED NOTES

Y10 PROVIDE (2) 3" RMC CONDUITS ROUTED FROM IT ROOM AND STUBED TO ROOF A MINIMUM OF 10' APART. ROOF PENETRATIONS SHOULD BE PLACED TO RESULT IN THE MOST DIRECT AND PRACTICAL PATHWAY TO THE IT ROOM AS POSSIBLE. CONDUIT SHOULD EXTEND A MINIMUM OF 30" ABOVE THE ROOF MEMBRANE AND ANCHORED TO THE BUILDING TO FACILITATE ON HOLDING ADDITIONAL ANTENNAS AND MAST UP TO 50LBS EACH.

Babcock Design

Salt Lake City
52 Exchange Place
Salt Lake City, UT 84111
801.531.1144

Boise
800 W Main Street, Suite 940
Boise, ID 83702
208.424.7675

babcockdesign.com

Consultant

ENVISION ENGINEERING
240 E. MORRIS AVE. SUITE 200
SALT LAKE CITY, UT 84115
P (801) 534-1130
www.envisioneng.com
ENV:2025-252

CITY OF ALPINE

ALPINE FIRE STATION

50 E 100 N ALPINE, UT 84004

Revisions

Num.	Description	Date

Project Number	25116
Original Issue	04.16.2026
Project Status	CONSTRUCTION DOCUMENTS

The information and content represented herein is considered by law the architect's instruments of service and are the property of Babcock Design. They are available for limited review and evaluation by clients, consultants, contractors, government agencies, vendors, and office personnel only in accordance with this notice. They are intended for use only for the project specified and are to be used for no other purpose or project including additions to or modification of the completed project. No part thereof may be copied, reproduced, photographed, modified, published, uploaded, transmitted, disclosed, sold, distributed to others in any way including in digital form, or otherwise used without the prior written consent of Babcock Design.

COPYRIGHT © 2025 BABCOCK DESIGN

Stamp

PROFESSIONAL ENGINEER
9808039-2202
ALEKSANDAR RANKOVIC
STATE OF UTAH
04/16/2026

Sheet Title

OVERALL ROOF PLAN

Sheet Number

EE301

Current as of: 4/16/2026 2:18:30 PM

Original drawing is 30" x 42" Autodesk Docs://25116 - ALPINE FIRE STATION 202/2025-269-ELEC_CENTRAL_V25.rvt

ONE-LINE SYMBOLS

SYMBOL	DESCRIPTION	SYMBOL	DESCRIPTION	SYMBOL	DESCRIPTION
'A'	LIGHTING AND APPLIANCE PANEL BOARD	'A'	DISTRIBUTION PANEL	'A'	LOAD CENTER
	CIRCUIT BREAKER		CIRCUIT BREAKER ENCLOSED		SPARE
	NORMALLY OPEN CONTACT		NORMALLY CLOSED CONTACT		THERMAL OVERLOAD
	MOTOR	K	KEY INTERLOCK	C	RELAY COIL
	TRANSFORMER		DISCONNECT SWITCH		DISCONNECT SWITCH FUSED
	CAM LOCK MALE		CAM LOCK FEMALE	G	GENERATOR
	MUSHROOM PUSH BUTTON	PF	PHASE FAILURE RELAY	M	METER
	AUTOMATIC TRANSFER SWITCH		GROUND		GUTTER
	FUSED SWITCH		COMBINATION MCP STARTER WITH THERMAL OVERLOAD		COMBINATION FUSIBLE STARTER WITH THERMAL OVERLOAD
	POWER FACTOR CORRECTION CAPACITOR & ENCLOSURE		STANDARD SWITCHED WAY		GROUND RODS
	LIGHTNING PROTECTION		CT CABINET		PULLING SECTION
	CURRENT TRANSFORMER	SPD	SURGE SUPPRESSION DEVICE	GND N	GROUND AND NEUTRAL
	COLD WATER PIPE		BUILDING STEEL		CONCRETE ENCASED ELECTRODE
	ISOLATION AUTOMATIC TRANSFER SWITCH				MAIN SWITCHBOARD
	BUS BAR				GROUND SLEEVE

FEEDER SCHEDULE

FEEDER	TYPE	# OF SETS	CONDUIT DIAMETER	CONDUCTOR #	CONDUCTOR SIZE	EQ GND COND	ISOLATED GROUND	SYSTEM BONDING
A200	4S	1	2-1/2	4	250	6	-	-
A400	4S	2	2-1/2	4	250	3	-	-

FEEDER GENERAL NOTES:

1. CONTRACTOR SHALL REVIEW ONE-LINE DIAGRAM AND CONFIRM FEEDER WIRE SIZES. ANY DISCREPANCIES SHALL BE REPORTED TO THE ENGINEER PRIOR TO BID. IF DISCREPANCIES EXIST, CONTRACTOR SHALL PROVIDE CORRECT WIRE SIZE BASED ON ACTUAL BREAKER SIZE AND ANY VOLTAGE DROP ADJUSTMENTS. SEE NEC 210.19, 215.2, 250.112, AND 310.15.
2. ALL GROUNDING WIRES SHOWN IN FEEDER SCHEDULE ARE COPPER WIRES.
3. ALL SYSTEM BONDING JUMPER CONDUCTORS SHOWN ARE TO BE RUN IN EACH PARALLEL FEEDER SET

TRANSFER SWITCH SCHEDULE

NAME	VOLTAGE	POLES	WIRES	AMPERAGE	WITHSTAND CURRENT RATING	NEMA RATING	TRANSFER DELAY	BYPASS	TRANSITION
ATS-C	120/208 V	4	4	200 A	42000 A	NEMA 1	60 SEC	N	OPEN
ATS-F	120/208 V	4	4	400 A	42000 A	NEMA 1	30 SEC	Y	OPEN

GENERAL ONE-LINE NOTES:

1. THE ELECTRICAL CONTRACTOR SHALL VERIFY THE AVAILABLE FAULT CURRENT WITH THE OWNER PRIOR TO BIDDING AND PROVIDE EQUIPMENT RATING ACCORDINGLY. SUBMIT FAULT CURRENT CALCULATIONS WITH SHOP DRAWINGS SUBMITTAL.
2. PROVIDE FULL LENGTH VERTICAL BUSSING IN ALL SWITCHBOARDS, DISTRIBUTION PANELBOARDS, AND PANELBOARDS.
3. COORDINATE SPACE WITH ALL OTHER TRADES TO MAINTAIN ALL CODE-REQUIRED CLEARANCES.

SELECTIVE COORDINATION REQUIREMENTS:

A. CONTRACTOR SHALL PROVIDE ALL OF THE FOLLOWING FOR EMERGENCY, LEGALLY REQUIRED STANDBY, OPTIONAL STANDBY, AND NORMAL POWER SYSTEMS:
   a. FAULT CURRENT ANALYSIS.
   b. ARC-FLASH STUDY.
   c. SELECTIVE COORDINATION STUDY AND SETTINGS OF ALL ADJUSTABLE TRIP OVERCURRENT PROTECTION DEVICES.

B. THE POWER SYSTEMS MUST BE SELECTIVELY COORDINATED (DOWN TO THE SMALLEST OVERCURRENT PROTECTIVE DEVICE) TO THE FOLLOWING LEVELS:
   a. EMERGENCY SYSTEM TO 0.1 SECONDS
   b. LEGALLY REQUIRED SYSTEM TO 0.1 SECONDS
   c. OPTIONAL STANDBY SYSTEM TO 1 SECOND
   d. NORMAL POWER SYSTEM TO EXTENT POSSIBLE

C. CONTRACTOR SHALL PROVIDE ELECTRONIC SOLID STATE ADJUSTABLE TRIP (LSI) CIRCUIT BREAKERS, AND/OR CIRCUIT BREAKERS WITH LARGER FRAME SIZES AS NECESSARY TO ENSURE PROPER SELECTIVE COORDINATION. REFER TO SPECIFICATIONS FOR ADDITIONAL SELECTIVE COORDINATION REQUIREMENTS ON EMERGENCY, LEGALLY REQUIRED STANDBY, AND OPTIONAL STANDBY POWER SYSTEMS.

D. A PRELIMINARY SELECTIVE COORDINATION STUDY AND DEVICE SETTINGS SHALL BE SUBMITTED FOR REVIEW AND APPROVAL. NO ELECTRICAL EQUIPMENT SUBMITTAL SHALL BE SUBMITTED FOR APPROVAL PRIOR TO SUBMITTING THE PRELIMINARY SELECTIVE COORDINATION STUDY AND DEVICE SETTINGS OF THE PROPOSED ELECTRICAL DISTRIBUTION EQUIPMENT AND ASSOCIATED OVERCURRENT DEVICES. THE STUDY SHALL BE SUBMITTED FOR REVIEW BY THE ELECTRICAL ENGINEER AND OWNER TO ENSURE CONFORMANCE TO THE CONSTRUCTION DOCUMENTS. NO ELECTRICAL DISTRIBUTION EQUIPMENT SHALL BE RELEASED UNTIL THE SELECTIVE COORDINATION STUDY SHOWS PROPER COORDINATION OF ALL SYSTEM ELEMENTS.

E. AT THE END OF THE PROJECT A COMPLETE FAULT CURRENT, ARC-FLASH, AND SELECTIVE COORDINATION STUDY SHALL BE SUBMITTED FOR REVIEW. NO ARC FLASH LABELS SHALL BE APPLIED TO ANY EQUIPMENT UNTIL THE STUDY IS REVIEWED AND ACCEPTED.

F. ONCE PRELIMINARY SELECTIVE COORDINATION STUDY IS COMPLETED, THE WITHSTAND RATING FOR THE AUTOMATIC TRANSFER SWITCHES (ATS) SHALL BE COORDINATED WITH THE SPECIFIC BREAKERS FEEDING ATS THAT ARE PROVIDED.

G. CONTRACTOR SHALL ADJUST PROTECTIVE DEVICE SETTINGS ACCORDING TO RECOMMENDED SETTINGS PROVIDED BY THE FINAL COORDINATION STUDY. FIELD ADJUSTMENTS SHALL BE COMPLETED BEFORE THE PUNCH LST WALKTHROUGH.

FEEDER GENERAL NOTES:

1. CONTRACTOR SHALL REVIEW ONE-LINE DIAGRAM AND CONFIRM FEEDER WIRE SIZES. ANY DISCREPANCIES SHALL BE REPORTED TO THE ENGINEER PRIOR TO BID. IF DISCREPANCIES EXIST, CONTRACTOR SHALL PROVIDE CORRECT WIRE SIZE BASED ON ACTUAL BREAKER SIZE AND ANY VOLTAGE DROP ADJUSTMENTS. SEE NEC 210.19, 215.2, 250.112, AND 310.15.
2. ALL GROUNDING WIRES SHOWN IN FEEDER SCHEDULE ARE COPPER WIRES.
3. ALL SYSTEM BONDING JUMPER CONDUCTORS SHOWN ARE TO BE RUN IN EACH PARALLEL FEEDER SET

KEYED NOTES

SL1 METER PROVIDED BY RMP AND METER BASE PROVIDED BY DIVISION 26 PER ALL RMP REQUIREMENTS.

SL2 PROVIDE PERMANENT LABEL ON MAIN SERVICE EQUIPMENT. LABEL SHALL READ "MAXIMUM CALCULATED FAULT CURRENT OF ____ A CALCULATED ON __/__/__." CALCULATED FAULT CURRENT TO BE PROVIDED BY ELECTRICAL CONTRACTOR.

SL3 GENERATOR IS OWNER PROVIDED AND CONTRACTOR INSTALLED. CONTRACTOR IS RESPONSIBLE TO MAKE ALL THE FINAL CONNECTIONS NECESSESSARY FOR A COMPLETE INSTALLATION.

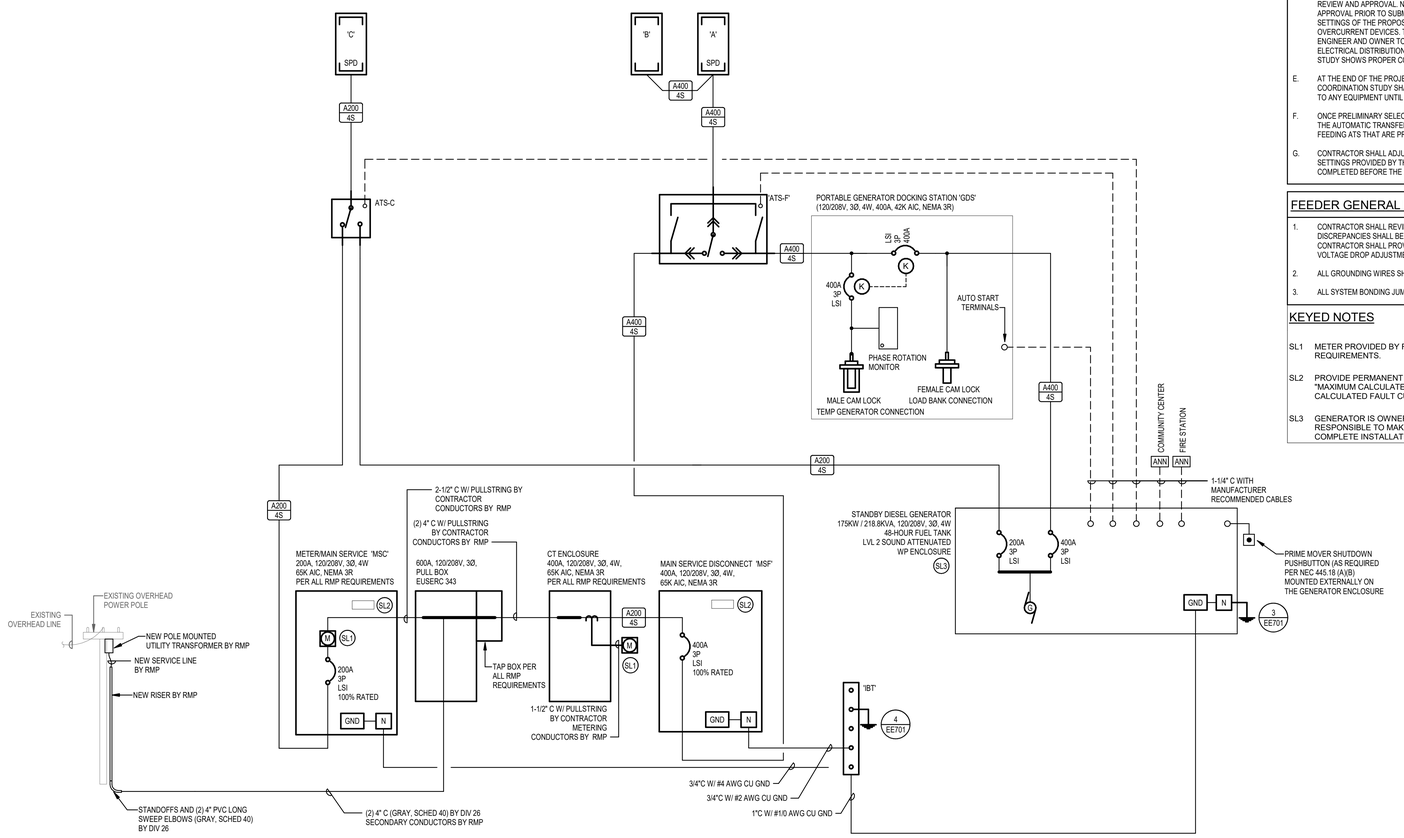

1 POWER SINGLE LINE DIAGRAM
1/2" = 1'-0"

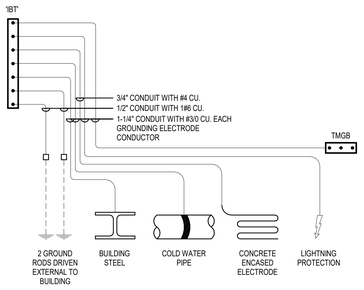

4 IBT GROUNDING DETAIL
SCALE: NTS

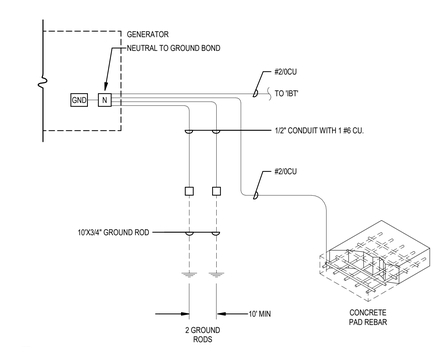

3 GENERATOR GROUNDING DETAIL
SCALE: NTS

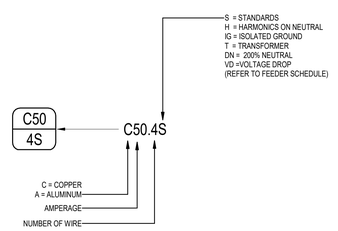

2 FEEDER DETAIL
SCALE: NTS

Babcock Design

Salt Lake City
52 Exchange Place
Salt Lake City, UT 84111
801.531.1144

Boise
800 W Main Street, Suite 940
Boise, ID 83702
208.424.7675

babcock**design**.com

Consultant

ENVISION ENGINEERING
240 E. MORRIS AVE. SUITE 200
SALT LAKE CITY, UT 84115
P (801) 534-1130
www.envisioneng.com
ENV:2025-252

CITY OF ALPINE

ALPINE FIRE STATION

50 E 100 N ALPINE, UT 84004

Revisions

Num.	Description	Date

Project Number	25116
Original Issue	04.16.2026
Project Status	CONSTRUCTION DOCUMENTS

The information and content represented herein is considered to be the architect's instruments of service and are the property of Babcock Design. They are available for limited review and evaluation by clients, consultants, contractors, government agencies, vendors, and office personnel only in accordance with this notice. They are intended for use only for the project specified and are to be used for no other purpose or project including additions to or modification of the completed project. No part thereof may be copied, reproduced, photographed, modified, published, uploaded, transmitted, disclosed, sold, distributed to others in any way including in digital form, or otherwise used without the prior written consent of Babcock Design.

COPYRIGHT © 2025 BABCOCK DESIGN

Stamp

PROFESSIONAL ENGINEER
9808039-2202
ALEKSANDAR RANKOVIC
STATE OF UTAH
04/16/2026

Sheet Title

POWER ONE-LINE DIAGRAM

Sheet Number

EE701

Current draft: 4/15/2026 2:19:21 PM
Original drawing is 30" x 42" Autodesk Docs://25116 - ALPINE FIRE STATION 2026/2025-269-ELEC_CENTRAL_V25.rvt

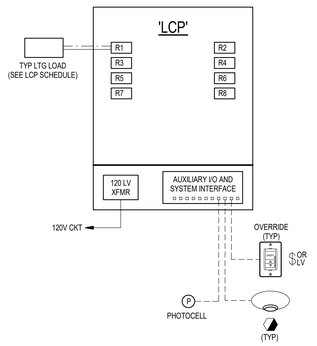

7 **LCP RISER DIAGRAM**
SCALE: NTS

LIGHTING CONTROL PANEL LCP

	ELECTRICAL INFO					
RELAY	PANEL	CKT	LOCATION	CONTROL	PROGRAMMING	DIMMING
LCP-1	B	57	SITE LIGHTING EAST	PHOTOCELL	G	0-10V
LCP-2	B	55	SITE LIGHTING WEST	PHOTOCELL	G	0-10V
LCP-3	B	26	EXTERIOR BUILDING LIGHTS	PHOTOCELL	G	0-10V
LCP-4	A	60	STATION CORRIDORS AND DAYROOM	G2 PANEL	H	0-10V

LCP-5 THROUGH LCP-8 ARE SPARES

PROGRAMMING REQUIREMENTS

A - TIME ON (6:00 AM) - TIME OFF (7:00 PM), 2 HOUR OVERRIDE AT LOW VOLTAGE SWITCH
B - TIME ON (5:00 AM) - TIME OFF (10:00 PM)
C - MANUAL ON - TIME OFF (5:30 PM)
D - MANUAL ON - MANUAL OFF - SWEEP OFF AT END OF DAY (5:30 PM)
E - TIME ON (7:30 AM) - MANUAL OFF - SWEEP OFF AT END OF DAY (5:30 PM)
F - PHOTO CELL ON - PHOTO CELL OFF
G - PHOTO CELL ON/OFF - DIM TO 50% BETWEEN (10:00 PM-6:00AM), 2 HOUR OVERRIDE AT LOW VOLTAGE SWITCH
H - LOCAL OCCUPANCY ON/OFF - 50% ON WITH MOPA SYSTEM ALARM. REVERT TO NORMAL PROGRAMMING AFTER A PERIOD OF TIME DESIGNATED BY THE FIRE CHIEF.

GENERAL NOTES:
1. PROGRAM SYSTEM TO MEET REQUIREMENTS OF 2021 IBC & 2021 IECC.
2. CONFIRM SWITCHING SCHEME WITH OWNER PRIOR TO PROGRAMMING SYSTEM.
3. INCLUDE A FINE TUNING VISIT WITHIN 3 MONTHS OF BUILDING OCCUPANCY AT OWNER'S REQUEST TO MAKE MINOR ADJUSTMENTS.
4. PROVIDE 0-10V DIMMING TO ALL LIGHTING ZONES.

LIGHTING WIRING DIAGRAMS

SYMBOL	DESCRIPTION	MOUNTING	REMARKS
	LIGHT SWITCH	+48"	
	LOW VOLTAGE LIGHT SWITCH	+48"	
	WALL MOUNT GRAPHIC TOUCH PAD CONTROLLER	+48"	
	OCCUPANCY SENSOR OR VACANCY SENSOR (AS NOTED ON PLANS)	CEILING	
	DIGITAL DAYLIGHT SENSOR	CEILING	
a	NORMAL POWER LIGHTING LOAD	CEILING	"a" LOWER CASE LETTER SPECIFIES ZONE
a	EMERGENCY POWER LIGHTING LOAD	CEILING	"a" LOWER CASE LETTER SPECIFIES ZONE
H N XX	RP: RELAY PACK RP-D: DIMMING RELAY PACK LC: RECEPTACLE LOAD CONTROLLER	ABOVE ACCESSIBLE CEILING	RELAYS MAY BE COMBINED IN ROOM CONTROLLER OR POWER PACKS.
EM H N N H EXX	ER: EMERGENCY RELAY PACK ER-D: EMERGENCY DIMMING RELAY PACK	ABOVE ACCESSIBLE CEILING	RELAYS MAY BE COMBINED IN ROOM CONTROLLER OR POWER PACKS. MUST BE UL 924 RATED FOR EMERGENCY LOADS.
———	3/4"C WITH LIGHTING BRACH CIRCUIT WIRING		
— · — · — · —	3/4"C WITH 0-10V DIMMING WIRING		
– – – – – –	3/4"C WITH CAT 5 CABLING		

LIGHTING CONTROL NOTES

1. PROGRAMMING SHALL BE COMPLETED BY THE CONTRACTOR PRIOR TO SUBSTANTIAL COMPLETION.
2. CONTRACTOR SHALL MODIFY PROGRAMMING AND PRESET SCENES AS REQUESTED BY OWNER.
3. PROVIDE FINE TUNING PROGRAMMING MODIFICATIONS AS REQUESTED BY THE OWNER WITHIN 6 MONTHS AFTER BUILDING OCCUPANCY.
4. IN ADDITION TO PRESET SCENES PROVIDE INDIVIDUAL CONTROL FOR EACH ZONE.
5. ALL WIRING DIAGRAMS ARE GENERAL IN NATURE. SPECIFIC CONFIGURATION AND QUANTITIES DUE TO MANUFACTURER AVAILABILITY WILL VARY. CONTRACTOR MUST PROVIDE ALL REQUIRED PARTS OF THE SYSTEM TO PERFORM AS INTENDED.
6. REFER TO FLOOR PLANS FOR EXACT DEVICE COUNT, DEVICE TYPE, QUANTITY OF POWER PACKS, AND PHOTOCELL SETTINGS.

LIGHTING GENERAL NOTES:

1. REFER TO LIGHTING DETAILS SHEETS FOR TYPICAL CONTROL WIRING DIAGRAMS. PROVIDE COMPLETE SYSTEM WITH ALL REQUIRED CONDUIT, WIRING, SWITCHES, SENSORS, POWER PACK, ETC.
2. LOCATE POWER PACKS AND ROOM CONTROLLERS ABOVE ACCESSIBLE CEILING NEAR ROOM ENTRANCES.
3. CONFIRM ALL LOCATIONS OF LIGHT FIXTURES WITH ARCHITECT PRIOR TO INSTALLATION.
4. PROVIDE UNSWITCHED HOT FOR ALL EMERGENCY LIGHTING CONTROLLERS OR EM BATTERY PACKS.
5. INDICATED LOCATIONS OF OCCUPANCY AND DAYLIGHT SENSORS ARE APPROXIMATE LOCATIONS AND QUANTITIES. PROVIDE SENSOR LOCATIONS, QUANTITIES, AND TYPES AS RECOMMENDED BY THE MANUFACTURER. PROVIDE COMPLETE PRODUCT DATA AND SHOP DRAWINGS INDICATING THE PROPOSED TYPES, COVERAGE PATTERNS, LOCATIONS, QUANTITIES, ETC.
6. COORDINATE THE LOCATION OF ALL CEILING SENSORS WITH CEILING GRIDS, LIGHT FIXTURES, CEILING DIFFUSERS, SPRINKLER HEADS, ETC.
7. ALL LIGHT FIXTURES IN DAYLIGHT ZONES SHALL BE AUTOMATICALLY DIMMED PER DAYLIGHT SENSOR; PROVIDE ADDITIONAL RELAYS, ROOM CONTROLLERS, AND/OR DRIVERS AS REQUIRED FOR THE FIXTURES IN THE DAYLIGHT ZONES TO OPERATE INDEPENDENTLY FROM THE REST OF THE LIGHTING IN THE SPACE.

LIGHTING CONTROL SYSTEM REQUIREMENTS:

NETWORKED LOW-VOLTAGE LIGHTING CONTROL SYSTEMS:

PROVIDE A DIGITAL, DISTRIBUTED INTELLIGENT, NETWORKED LOW-VOLTAGE LIGHTING CONTROL SYSTEM FOR ALL AREAS IDENTIFIED IN THE LIGHTING CONTROLS MATRIX. REFER TO SPECIFICATIONS FOR SYSTEM REQUIREMENTS.

PROVIDE LIGHTING CONTROL RELAY PANELS AS INDICATED ON THE ELECTRICAL DRAWINGS. RELAY PANELS SHALL BE TIED INTO THE NETWORKED LOW VOLTAGE LIGHTING CONTROL SYSTEM.

STANDALONE LOW VOLTAGE LIGHTING CONTROL SYSTEMS:

PROVIDE DIGITAL STANDALONE LOW VOLTAGE LIGHTING CONTROL SYSTEMS IN ALL AREAS NOT IDENTIFIED AS NETWORKED OR LINE-VOLTAGE CONTROLS IN THE LIGHTING CONTROLS MATRIX. REFER TO SPECIFICATIONS FOR SYSTEM REQUIREMENTS.

LINE-VOLTAGE LIGHTING CONTROLS:

PROVIDE LINE-VOLTAGE LIGHTING CONTROLS FOR ALL AREAS IDENTIFIED IN THE LIGHTING CONTROLS MATRIX. REFER TO SPECIFICATIONS FOR SYSTEM REQUIREMENTS.

SET OCCUPANCY SENSOR TO HAVE A 10 MINUTE DELAY. TIMER SWITCHES SHALL GIVE OCCUPANTS THE ABILITY TO SELECT FROM 2, 5, 10, 15, 30, OR 60 MINUTES.

ZONING REQUIREMENTS:

1. COORDINATE WITH OWNER/ARCHITECT ON PROGRAMMING SCENES (PER ZONING SHOWN ON DRAWINGS). EACH STANDALONE SYSTEM SHALL BE PROGRAMMED TO REVERT BACK TO ITS NORMAL "ON" POSITION ONE HOUR AFTER SELECTING A SCENE OR RAISING OR LOWERING A LIGHTING ZONE
2. EGRESS LIGHT FIXTURES IN EACH ZONE SHALL BE PROVIDED WITH A RELAY PACK/ROOM CONTROLLER UL 924 LISTED FOR EMERGENCY OPERATIONS. SEE EMERGENCY OPERATIONS BELOW.
3. EACH ROOM OR AREA SHALL BE CONSIDERED A SEPARATE ZONE. UNLESS NOTED OTHERWISE. PLEASE NOTE THAT SOME ROOMS HAVE MULTIPLE ZONES. REFER TO THE LIGHTING PLANS FOR DELINEATED LIGHTING ZONES.
4. DIFFERENT LIGHT FIXTURE TYPES IN EACH ZONE SHALL HAVE SEPARATE POWER PACKS.
5. POWER PACKS SHALL BE RATED IN AMPERAGES AND VOLTAGES AS MAY BE REQUIRED TO SUIT APPLICATION.
6. PROVIDE A MINIMUM OF AT LEAST 10% EXTRA POWER PACKS OF EACH SIZE AND TYPE UTILIZED AND ZONE AS MAY BE DIRECTED BY THE ELECTRICAL ENGINEER.

DIMMING LEADS: PROVIDE DIMMING LEADS TO ALL FIXTURES.

EMERGENCY OPERATION (BATTERY PACKS): PROVIDE A UL 924 LISTED 1400 LUMEN, 90 MINUTE EMERGENCY BATTERY PACK (BODINE B50, OR APPROVED EQUAL). REFER TO FLOOR PLANS, LIGHTING DETAILS, AND LIGHT FIXTURES SCHEDULE. ALL EGRESS LIGHT FIXTURES SHALL BE SWITCHED OFF WITH OTHER NORMAL POWERED LIGHT FIXTURES DURING NORMAL OPERATION, BUT POWERED "FULL ON" DURING AN EMERGENCY OPERATION.

BIDDING REQUIREMENTS (OWNER SPECIFIC MANUFACTURERS): BIDDERS SHALL BREAK OUT THE LIGHT FIXTURE PACKAGE SEPARATE FROM THE LIGHTING CONTROL SYSTEM. ALL SPECIAL FEATURES PERTAINING TO LIGHTING CONTROLS ASSOCIATED WITH THE LIGHT FIXTURES SHALL BE CONSIDERED LIGHTING CONTROLS. BIDDERS WHO DO NOT CONFORM TO THIS REQUIREMENT MAY BE DISQUALIFIED.

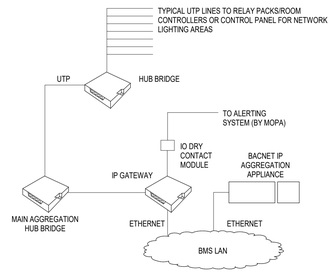

6 **LCP STANDARD LIGHTING WIRING DIAGRAM**
SCALE: NTS

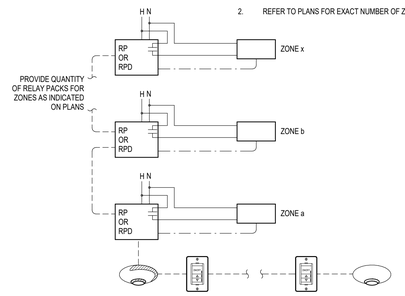

4 **LOW VOLTAGE WIRING DIAGRAM EMERGENCY WITH 3+ ZONES**
SCALE: NTS

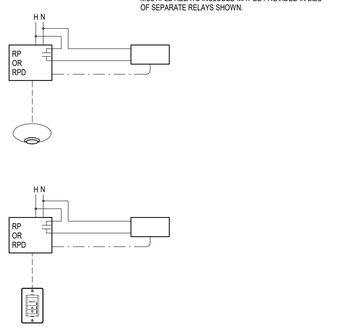

2 **LOW VOLTAGE WIRING DIAGRAM**
SCALE: NTS

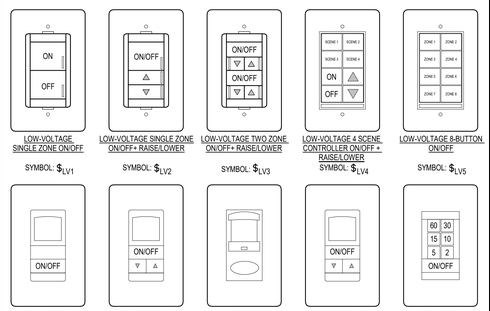

5 **LIGHTING CONTROL WALL SWITCH DETAILS**
SCALE: NTS

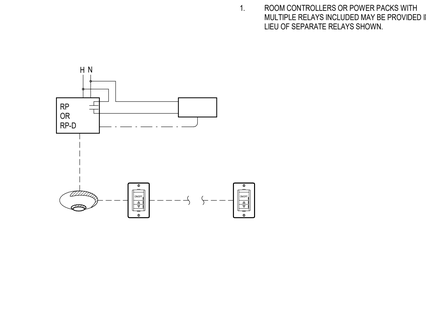

3 **TYPICAL LOW-VOLTAGE CEILING SENSOR WIRING DIAGRAM**
SCALE: NTS

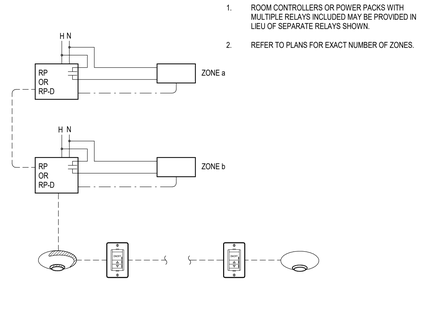

1 **TYPICAL LOW-VOLTAGE WITH TWO ZONES**
SCALE: NTS

Babcock Design

Salt Lake City
52 Exchange Place
Salt Lake City, UT 84111
801.531.1144

Boise
800 W Main Street, Suite 940
Boise, ID 83702
208.424.7675

babcock**design**.com

Consultant

ENVISION ENGINEERING
240 E. MORRIS AVE. SUITE 200
SALT LAKE CITY, UT 84115
P (801) 534-1130

www.envisioneng.com
ENV:2025-252

CITY OF ALPINE

ALPINE FIRE STATION

50 E 100 N ALPINE, UT 84004

Revisions

Num.	Description	Date

Project Number	25116
Original Issue	04.16.2026
Project Status	CONSTRUCTION DOCUMENTS

The information and content represented herein is considered by law the architects instruments of service and are the property of Babcock Design. They are available for limited review and evaluation by clients, consultants, contractors, government agencies, vendors, and office personnel only in accordance with this notice. They are intended for use only for the project specified and are to be used for no other purpose or project including additions to or modification of the completed project. No part thereof may be copied, reproduced, photographed, modified, published, uploaded, transmitted, disclosed, sold, distributed to others in any way including in digital form, or otherwise used without the prior written consent of Babcock Design.

COPYRIGHT © 2025 BABCOCK DESIGN

Stamp

PROFESSIONAL ENGINEER
R808039-2202
ALEKSANDAR RANKOVIC
STATE OF UTAH
04/16/2026

Sheet Title

LIGHTING DETAILS AND DIAGRAMS

Sheet Number

EE702

Current as of: 4/16/2026 2:26:05 PM
Original drawing is 30" x 42" Autodesk Docs://25116 - ALPINE FIRE STATION 2022/2025-269-ELEC_CENTRAL_V25.rvt

STANDARD SEQUENCE OF OPERATIONS

ROOM DESIGNATIONS		OCCUPANCY SENSOR					TIME SWITCH				CONTROLS						
ROOM TYPE I.D.	ROOM TYPE	AUTO ON OCCUPANCY	MANUAL ON (VACANCY)	AUTO OFF (TIMEOUT)	AUTO PARTIAL OFF	AUTO OFF AFTER HOURS	TIME ON	TIME OFF	PHOTOCELL ON	PHOTOCELL OFF	MANUAL OVERRIDE SWITCH	RECEPTACLE CONTROL	NETWORKED LOW-VOLTAGE CONTROLS	STANDALONE LOW-VOLTAGE CONTROLS	LINE-VOLTAGE CONTROLS	TASK TUNED LIGHT LEVEL FC	SEQUENCE OF OPERATIONS
LC.AB	APPARATUS BAY	100%		20 MIN							X			X		**50**	AUTO ON TO 100% WITH OCCUPANCY SENSORS, AUTO OFF WITH OCCUPANCY SENSORS. 2 ZONES OF CONTINUOUS DIMMING DAYLIGHTING CONTROL WHERE > 150W OF LIGHTING WITHIN PRIMARY DAYLIGHT ZONE OR > 300W OF LIGHTING COMBINED IN BOTH DAYLIGHT ZONES.
LC.C1	CORRIDOR 1	100%		20 MIN										X		**25**	AUTO ON TO 100% WITH OCCUPANCY SENSORS, AUTO OFF WITH OCCUPANCY SENSORS.
LC.C2	CORRIDOR 2	100%		20 MIN									X	X		**10**	AUTO ON TO 100% WITH OCCUPANCY SENSORS, AUTO OFF WITH OCCUPANCY SENSORS. 50% ON WITH MOPA ALARM.
LC.DA.2	DINING AREA (COMMUNITY ROOM)		X	20 MIN							X			X		**30**	MANUAL ON, AUTO OFF WITH VACANCY SENSOR. LOCAL ON/OFF/DIMMING CONTROL.
LC.ER	ELECTRICAL ROOM										X				**X**	**50**	MANUAL ON, MANUAL OFF.
LC.G1	GYM (FITNESS ROOM)		X	20 MIN							X			X		**30**	MANUAL ON, AUTO OFF WITH VACANCY SENSOR. LOCAL ON/OFF/DIMMING CONTROL.
LC.KI	KITCHEN										X			X		**50**	MANUAL ON, MANUAL OFF.
LC.LG	LOUNGE		X	20 MIN							X		X	X		**25**	MANUAL ON, AUTO OFF WITH VACANCY SENSOR. LOCAL ON/OFF/DIMMING CONTROL. 50% ON WITH MOPA ALARM.
LC.LO.1	LOBBY (GENERAL)	100%		20 MIN									X	X		**25**	AUTO ON/OFF WITH OCCUPANCY SENSOR. 50% ON WITH MOPA ALARM
LC.LQ	LIVING QUARTERS										X				**X**	**30**	MANUAL ON, MANUAL OFF.
LC.LU	LAUNDRY		X	20 MIN							X			X		**30**	MANUAL ON, AUTO OFF WITH VACANCY SENSOR. LOCAL ON/OFF/DIMMING CONTROL.
LC.PO	PRIVATE OFFICE		X	20 MIN							X			X		**30**	MANUAL ON, AUTO OFF WITH VACANCY SENSOR. LOCAL ON/OFF/DIMMING CONTROL.
LC.RR.1	RESTROOM (SINGLE OCCUPANT)	100%		20 MIN							X			X		**20**	AUTO ON TO 100% WITH OCCUPANCY SENSORS, AUTO OFF WITH OCCUPANCY SENSORS.
LC.ST.1	STORAGE (SMALL)	100%		20 MIN							X			X		**15**	AUTO ON TO 100% WITH OCCUPANCY SENSORS, AUTO OFF WITH OCCUPANCY SENSORS. LOCAL ON/OFF CONTROL.
LC.VE	VESTIBULE	100%		20 MIN										X		**15**	AUTO ON TO 100% WITH OCCUPANCY SENSORS, AUTO OFF WITH OCCUPANCY SENSORS.

NOTES:

1. ALL LIGHTING CONTROLS ARE TO BE LOW-VOLTAGE UNLESS LINE-VOLTAGE IS SELECTED.
2. IF A GENERATOR OR INVERTER IS PRESENT, LINE-VOLTAGE EMERGENCY LIGHTS WILL REQUIRE A GENERATOR TRANSFER DEVICE, BODINE GTD OR EQUIVALENT. OTHERWISE BATTERY PACKS ARE TO BE PROVIDED.
3. ADJUST THE DEFAULT MAXIMUM LIGHT LEVELS IN EACH SPACE. VALUES LISTED ARE AVERAGE FOOT CANDLE LEVELS ON THE TASK SURFACE. PROVIDE DIMMING LEADS TO EACH FIXTURE WHETHER THE ROOM HAS A DIMMER SWITCH OR NOT.
4. IF VENDING MACHINE HAS PERISHABLE ITEMS, DO NOT TIE TO LIGHTING CONTROL SYSTEM.
5. UTAH STATE AMENDMENTS HAVE REMOVED THE REQUIREMENT FOR RECEPTACLE CONTROL. FOR OTHER STATES THAT REQUIRE IT, PROVIDE SPLIT CONTROLLED RECEPTACLES IN ENCLOSED OFFICES, OPEN OFFICES, CONFERENCE ROOMS, COPY ROOMS, BREAKROOMS AND CLASSROOMS.

LIGHT FIXTURE SCHEDULE

TYPE	DESCRIPTION	LIGHT SOURCE	ELECTRICAL VOLTAGE	ELECTRICAL LOAD	APPROVED MANUFACTURERS	CATALOG NUMBER	COMMENTS/NOTES
AP1	DESCRIPTION: AREA POLE LIGHT DIMENSION: MOUNTING: POLE MATERIAL: ALUMINUM COLOR: BLACK LENS MATERIAL: ACRYLIC LENS REFLECTOR DISTRIBUTION TYPE: TYPE V	LAMP TYPE: LED LUMENS: 7500 DIMMING: 0-10V COLOR TEMP: 3000K	120 V	75	KING LUMINAIRE	K137-P4AR-V-75(SSL)-7030	
B1	DESCRIPTION: PATHWAY LIGHT BOLLARD DIMENSION: 42"H 5-3/4" SQUARE MOUNTING: GROUND MATERIAL: ALUMINUM COLOR: BLACK LENS MATERIAL: ACRYLIC LENS REFLECTOR DISTRIBUTION TYPE: N/A	LAMP TYPE: LED LUMENS: 1100 DIMMING: 0-10V COLOR TEMP: 3000K	120 V	11	EVERGREEN LIGHTING	VIR-11-42-6-L20-CSM-TBR-CA-35K	
B2	DESCRIPTION: EXTERIOR CONCRETE BENCH LIGHT DIMENSION: 12"W 4"H MOUNTING: CASE IN CONCRETE MATERIAL: ALUMINUM COLOR: BLACK LENS MATERIAL: ACRYLIC LENS REFLECTOR DISTRIBUTION TYPE: N/A	LAMP TYPE: LED LUMENS: 474 DIMMING: 0-10V COLOR TEMP: 3000K	120 V	11	VISTA (OR APPROVED EQUIVALENT)	1503-AB-B-30-MV-010-CP-FT	
C1	DESCRIPTION: STRIP LIGHT DIMENSION: 48L" 3"W MOUNTING: SURFACE MATERIAL: COLOR: LENS MATERIAL: ACRYLIC LENS REFLECTOR DISTRIBUTION TYPE: N/A	LAMP TYPE: LED LUMENS: 4100 DIMMING: 0-10V COLOR TEMP: 4000K	120 V	8 /FT	METALUX (OR APPROVED EQUIVALENT)	4SNX-41SL-LW-UNV-L835-CD1-U	PROVIDE WITH BATTERY PACK FOR EMERGENCY LIGHTS MARKED ON PLANS
CV1	DESCRIPTION: COVE LIGHT IN LOBBY DIMENSION: 10'L X 1.6" X 2.4" MOUNTING: COVE MATERIAL: ALUMINUM COLOR: WHITE LENS MATERIAL: ACRYLIC LENS REFLECTOR DISTRIBUTION TYPE: N/A	LAMP TYPE: LED LUMENS: 500LM/FT DIMMING: 0-10V COLOR TEMP: 4000K	120 V	8 /FT	IO (OR APPROVED EQUIVALENT)	CS-SL-9SCT-120-ID-UNV-W-SA-STD-XF	
CV2	DESCRIPTION: MILLWORK COVE LIGHT DIMENSION: MOUNTING: RECESSED MATERIAL: ALUMINUM COLOR: WHITE LENS MATERIAL: ACRYLIC LENS REFLECTOR DISTRIBUTION TYPE: N/A	LAMP TYPE: LED LUMENS: DIMMING: COLOR TEMP:	120 V	8 /FT	TL (OR APPROVED EQUIVALENT)	EMB1SW/3.0-30K-DRY-STD-DF-S1-BW-CLS-WH-CL2-SP-ST-XX	ADD/ALTERNATE
CV3	DESCRIPTION: COVE LIGHT FOR LOBBY SIGNAGE DIMENSION: 10'L X 1.6" X 2.4" MOUNTING: COVE MATERIAL: ALUMINUM COLOR: WHITE LENS MATERIAL: ACRYLIC LENS REFLECTOR DISTRIBUTION TYPE: N/A	LAMP TYPE: LED LUMENS: 350LM/FT DIMMING: 0-10V COLOR TEMP: 3000K	120 V	8 /FT	TL (OR APPROVED EQUIVALENT)	ATOM-02-SW-XX-XX-XX-XX	
DR6	DESCRIPTION: 6" RECESSED DOWNLIGHT DIMENSION: 6" ROUND MOUNTING: RECESSED MATERIAL: ALUMINUM COLOR: WHITE LENS MATERIAL: N/A LENS REFLECTOR DISTRIBUTION TYPE: WIDE	LAMP TYPE: LED LUMENS: 2000 DIMMING: 0-10V COLOR TEMP: 4000K	120 V	16	HALO (OR APPROVED EQUIVALENT)	HC620D010 HM60525835 61MDH	PROVIDE WITH BATTERY PACK FOR EMERGENCY LIGHTS MARKED ON PLANS
G1	DESCRIPTION: 2X2 LAY IN FIXTURE DIMENSION: 2' X 2' MOUNTING: LAY-IN GRID MATERIAL: ALUMINUM COLOR: WHITE LENS MATERIAL: ACRYLIC LENS REFLECTOR DISTRIBUTION TYPE: N/A	LAMP TYPE: LED LUMENS: 4000 DIMMING: 0-10V COLOR TEMP: 4000K	120 V	26	METALUX (OR APPROVED EQUIVALENT)	24CZ2-35-UNV-L835-CD1-U	PROVIDE WITH BATTERY PACK FOR EMERGENCY LIGHTS MARKED ON PLANS
G2	DESCRIPTION: 2X2 PANEL DIMENSION: 2' X 2' MOUNTING: GYP CEILING MATERIAL: ALUMINUM COLOR: WHITE LENS MATERIAL: ACRYLIC LENS REFLECTOR DISTRIBUTION TYPE: N/A	LAMP TYPE: LED LUMENS: 4000 DIMMING: 0-10V COLOR TEMP: 4000K	120 V	26	METALUX (OR APPROVED EQUIVALENT)	22MMS-L3C3-UNV	PROVIDE WITH BATTERY PACK FOR EMERGENCY LIGHTS MARKED ON PLANS
H1	DESCRIPTION: HIGH BAY DIMENSION: 18"L 2-1/2" H 12-1/4" W MOUNTING: SURFACE MATERIAL: ALUMINUM COLOR: WHITE LENS MATERIAL: ACRYLIC LENS REFLECTOR DISTRIBUTION TYPE: N/A	LAMP TYPE: LED LUMENS:12,000 DIMMING: 0-10V COLOR TEMP: 4000K	120 V	76	METALUX (OR APPROVED EQUIVALENT)	SPHB-12-W-UNV-L840-CD-U	PROVIDE WITH BATTERY PACK FOR EMERGENCY LIGHTS MARKED ON PLANS
PC	DESCRIPTION: PENDANT CYLINDAR DOWNLIGHT DIMENSION: 6" MOUNTING: SUSPENDED MATERIAL: ALUMINUM COLOR: WHITE LENS MATERIAL: ACRYLIC LENS REFLECTOR DISTRIBUTION TYPE: WIDE	LAMP TYPE: LED LUMENS: DIMMING: COLOR TEMP:	120 V	32	ALPHABET (OR APPROVED EQUIVALENT)	BETA-6R-20LM-40K-60D-NL-WH-WH-AC6-UNV-DIM10	PROVIDE WITH 'EM7-ITS' BATTERY PACK FOR EMERGENCY LIGHTS MARKED ON PLANS
PL4B	DESCRIPTION: 4' SUSPENDED LINEAR PENDANT DIMENSION: 48"L 3"W 5.57"H MOUNTING: SUSPENDED MATERIAL: EXTRUDED ALUMINUM, COLOR: BLACK LENS MATERIAL: SATIN COAT LENS REFLECTOR DISTRIBUTION TYPE: N/A	LAMP TYPE: LED LUMENS: 6200 DIMMING: 0-10V COLOR TEMP: 4000k	120 V	7 /FT	NEO RAY (OR APPROVED EQUIVALENT)	S123DP-C775D835-C4JBB-4F0-1-UDD-F-B	PROVIDE WITH BATTERY PACK FOR EMERGENCY LIGHTS MARKED ON PLANS
PL8W	DESCRIPTION: 8' SUSPENDED LINEAR PENDANT DIMENSION: 96"L 3"W 5.57"H MOUNTING: SUSPENDED MATERIAL: EXTRUDED ALUMINUM, COLOR: WHITE LENS MATERIAL: SATIN COAT LENS REFLECTOR DISTRIBUTION TYPE: N/A	LAMP TYPE: LED LUMENS: 6200 DIMMING: 0-10V COLOR TEMP: 4000k	120 V	7 /FT	NEO RAY (OR APPROVED EQUIVALENT)	S123DP-C775D835-C4JBW-8F0-1-UDD-F-W	PROVIDE WITH BATTERY PACK FOR EMERGENCY LIGHTS MARKED ON PLANS
V1B	DESCRIPTION: 3' HORIZONTAL VANITY LIGHT DIMENSION: 24"L 3"H 3/4"D MOUNTING: WALL MATERIAL: FABRICATED METAL COLOR: BLACK LENS MATERIAL: ACRYLIC, FROSTED LENS REFLECTOR DISTRIBUTION TYPE: N/A	LAMP TYPE: LED LUMENS: 1200 DIMMING: 0-10V COLOR TEMP: 3000K	120 V	5 /FT	AFX (OR APPROVED EQUIVALENT)	BRCV2403LAJUDBK	
V1N	DESCRIPTION: 3' HORIZONTAL VANITY LIGHT DIMENSION: 24"L 3"H 3/4"D MOUNTING: WALL MATERIAL: FABRICATED METAL COLOR: SATIN NICKEL LENS MATERIAL: ACRYLIC, FROSTED LENS REFLECTOR DISTRIBUTION TYPE: N/A	LAMP TYPE: LED LUMENS: 1200 DIMMING: 0-10V COLOR TEMP: 3000K	120 V	5 /FT	AFX (OR APPROVED EQUIVALENT)	BRCV2403LAJUDSN	
W1	DESCRIPTION: EXTERIOR WALL PACK DIMENSION: 12-1/4"W 7-7/8"H 6-9/16D MOUNTING: WALL MATERIAL: DIE CAST ALUMINUM, COLOR: BRONZE LENS MATERIAL: N/A LENS REFLECTOR DISTRIBUTION TYPE: TYPE IV WIDE	LAMP TYPE: LED LUMENS: 3814 DIMMING: 0-10V COLOR TEMP: 3000K	120 V	27	MCGRAW EDISON (OR APPROVED EQUIVALENT)	GKO-PB2A-730-U-T4W-BZ	PROVIDE WITH BATTERY PACK FOR EMERGENCY LIGHTS MARKED ON PLANS
W2	DESCRIPTION: EXTERIOR WALL PACK BAY DOORS DIMENSION: 12-1/4"W 7-7/8"H 6-9/16D MOUNTING: WALL MATERIAL: DIE CAST ALUMINUM, COLOR: BRONZE LENS MATERIAL: N/A LENS REFLECTOR DISTRIBUTION TYPE: TYPE III	LAMP TYPE: LED LUMENS: 7785 DIMMING: 0-10V COLOR TEMP: 3000K	120 V	58	MCGRAW EDISON (OR APPROVED EQUIVALENT)	GKO-PB2C-730-U-T3-BZ	PROVIDE WITH BATTERY PACK FOR EMERGENCY LIGHTS MARKED ON PLANS
WS	DESCRIPTION: DORMITORY BED SCONCE DIMENSION: MOUNTING: WALL MATERIAL: COLOR: LENS MATERIAL: LENS REFLECTOR DISTRIBUTION TYPE:	LAMP TYPE: LED LUMENS: 1500 DIMMING: N/A COLOR TEMP: 3000K	120 V	15	ABOVE ALL (OR APPROVED EQUIVALENT)	SMCL-25SP-SW90-4-15-SMK-MBK	
XC	DESCRIPTION: CEILING MOUNTED EXIT SIGN DIMENSION: 13"W 9-5/8"H 3-1/2" D MOUNTING: CEILING MATERIAL: EXTRUDED ALUMINUM, COLOR: SATIN ALUMINUM W/ GREEN LETTERS LENS MATERIAL: N/A LENS REFLECTOR DISTRIBUTION TYPE: N/A	LAMP TYPE: LED LUMENS: N/A DIMMING: N/A COLOR TEMP: N/A	120 V	2	EMERGI-LITE (OR APPROVED EQUIVALENT)	PAG6	
XW	DESCRIPTION: WALL MOUNTED EXIT SIGN DIMENSION: 13"W 9-5/8"H 3-1/2" D MOUNTING: WALL MATERIAL: EXTRUDED ALUMINUM, COLOR: SATIN ALUMINUM W/ GREEN LETTERS LENS MATERIAL: N/A LENS REFLECTOR DISTRIBUTION TYPE: N/A	LAMP TYPE: LED LUMENS: N/A DIMMING: N/A COLOR TEMP: N/A	120 V	2	EMERGI-LITE (OR APPROVED EQUIVALENT)	PAG6	

LIGHT FIXTURE GENERAL NOTES

1. REFER TO THE ARCHITECTURAL REFLECTED CEILING PLANS FOR LOCATIONS OF LIGHT FIXTURES. BRING ALL DISCREPANCIES OF LOCATIONS AND QUANTITIES TO THE ATTENTION OF THE ARCHITECT PRIOR TO BIDDING.
2. CONFIRM MOUNTING HEIGHTS AND LOCATIONS OF ALL LIGHT FIXTURES WITH ARCHITECTURAL ELEVATIONS AND / OR ARCHITECT.
3. REFER TO THE SPECIFICATIONS FOR OTHER LIGHT FIXTURE REQUIREMENTS.
4. CONFIRM AVAILABLE MOUNTING DEPTHS OF ALL LIGHT FIXTURES AND COMPARE WITH DEPTHS SHOWN ON SHOP DRAWINGS. BRING ALL POTENTIAL CONFLICT AREAS TO THE ATTENTION OF THE ARCHITECT AND ELECTRICAL ENGINEER PRIOR TO RELEASE.
5. ALL LIGHT FIXTURES ARE TO BE 3500K FOR INTERIOR APPLICATIONS AND 4000K FOR EXTERIOR APPLICATIONS, UNLESS OTHERWISE NOTED IN THE FIXTURE DESCRIPTION.
6. ALL LIGHT FIXTURES ARE TO BE A MINIMUM OF 80 CRI UNLESS OTHERWISE NOTED IN THE FIXTURE DESCRIPTION.
7. ALL LED SOURCES MUST MEET L80 AT 50,000 HRS MINIMUM UNLESS OTHERWISE NOTED.
8. CONFIRM ALL MOUNTING REQUIREMENTS WITH ARCHITECT PRIOR TO RELEASE.
9. ALL LIGHT FIXTURES ARE TO HAVE AN EFFICACY OF 80 LUMENS PER WATT MINIMUM.

BIDDING REQUIREMENTS

1. BID ONLY PRODUCTS THAT ARE SPECIFIED OR APPROVED BY ADDENDUM.
2. PACKAGING OF LIGHT FIXTURES WITH OTHER SYSTEMS IS NOT ALLOWED AND MUST BE BID SEPARATELY. I.E. LIGHT FIXTURES, THEATRICAL LIGHTING, SPORTS LIGHTING AND ALL LIGHTING CONTROLS.
3. WHEN ONLY ONE PRODUCT IS APPROVED FOR BIDDING, THE PRICE FOR THAT ITEM SHALL BE BROKEN OUT SEPARATELY WHEN SUBMITTING PRICING TO VARIOUS DISTRIBUTORS AND / OR CONTRACTOR.
4. WHEN A CONTRADICTION EXISTS BETWEEN A SPECIFIC MODEL NUMBER AND THE DESCRIPTION, THE DESCRIPTION SHALL GOVERN.

LIGHT FIXTURE PRIOR APPROVAL REQUIREMENTS

1. PRIOR APPROVAL IS REQUIRED BEFORE BIDDING THIS PROJECT.
2. PRIOR APPROVALS SHALL BE SUBMITTED TO THE ELECTRICAL ENGINEER'S OFFICE AT LEAST (8) WORKING DAYS BEFORE BID TIME. PRIOR APPROVALS RECEIVED AFTER THIS TIME PERIOD SHALL BE REJECTED.
3. ITEMS THAT ARE SUBMITTED AND HAVE BEEN APPROVED WILL BE LISTED IN THE ADDENDUM(S). VERBAL APPROVALS WILL NOT BE GIVEN ON ANY ITEM.
4. IT IS NOT THE RESPONSIBILITY OF THE ELECTRICAL ENGINEER TO NOTIFY THE SUBMITTING PARTY OF ERRORS IN THE SUBMITTAL. NOTIFICATION OF ERRORS BY THE ELECTRICAL ENGINEER PRIOR TO ISSUANCE OF THE ADDENDUM(S) MAY NOT BE GIVEN.
5. PRIOR APPROVALS SHALL CONSIST OF CUT SHEETS DESCRIBING THE PRODUCTS BEING SUBMITTED AS EQUIVALENTS. ALL SPECIFICATION INFORMATION SHALL BE CLEARLY MARKED. PRODUCTS WITHOUT PHOTOMETRIC DATA WILL NOT BE APPROVED.
6. LIGHTING PACKAGES WILL BE REVIEWED FOR GENERAL PROJECT COMPLIANCE ONLY. AN IN-DEPTH REVIEW OF ANY ALTERNATE FIXTURES WILL BE DONE DURING THE SUBMITTAL REVIEW PROCESS. ANY FIXTURES THAT ARE NOT TRULY EQUAL, AND / OR DO NOT COMPLY WITH ALL OF THE REQUIREMENTS CONTAINED IN THE CONTRACT DOCUMENTS, WILL NOT BE APPROVED. IF EQUIMENT IS DISAPPROVED FOR BIDDING, CONTRACTOR SHALL SUPPLY SPECIFIED EQUIPMENT AT NO EXTRA COST TO THE OWNER.

Babcock Design

Salt Lake City
52 Exchange Place
Salt Lake City, UT 84111
801.531.1144

Boise
800 W Main Street, Suite 940
Boise, ID 83702
208.424.7675

babcockdesign.com

Consultant

ENVISION ENGINEERING
240 E. MORRIS AVE. SUITE 200
SALT LAKE CITY, UT 84115
P (801) 534-1130
www.envisioneng.com
ENV:2025-252

CITY OF ALPINE

ALPINE FIRE STATION

50 E 100 N ALPINE, UT 84004

Revisions

Num.	Description	Date

Project Number	25116
Original Issue	04.16.2026
Project Status	CONSTRUCTION DOCUMENTS

The information and content represented herein is considered by law the architect's instruments of service and are the property of Babcock Design. They are available for limited review and evaluation by clients, consultants, contractors, government agencies, vendors, and office personnel only in accordance with this notice. They are intended for use only for the project specified and are to be used for no other purpose or project including additions to or modification of the completed project. No part thereof may be copied, reproduced, photographed, modified, published, uploaded, transmitted, disclosed, sold, distributed to others in any way including in digital form, or otherwise used without the prior written consent of Babcock Design.

COPYRIGHT © 2025 BABCOCK DESIGN

Stamp

PROFESSIONAL ENGINEER
9808039-2202
ALEKSANDAR RANKOVIC
STATE OF UTAH
04/16/2026

Sheet Title

LIGHTING FIXTURE SCHEDULE & CONTROLS

Sheet Number

EE801

PANELBOARD SCHEDULE

PANEL NAME: B

MOUNTING: RECESSED **ENCLOSURE:** NEMA 1 **DOOR TYPE:** DOOR-IN-DOOR
VOLTAGE: 120/208 Wye **PHASE:** 3 **WIRES:** 4 **Min. A.I.C. RATING:** 22,000A
LOCATION: MEP 116B **MAIN TYPE:** MLO **BUS RATING:** 400 A **MCB RATING:** N/A **BUS MATERIAL:** AL
FEED FROM: A **SPD:** CAT A **NEUTRAL RATING:** 100% **ISOLATED GROUND:** N/A

BRANCH BREAKERS

KEYED NOTE	CIRCUIT DESCRIPTION	AMP	POLE	LOAD TYPE	CKT #	A	A	B	B	C	C	CKT #	LOAD TYPE	POLE	AMP	CIRCUIT DESCRIPTION	KEYED NOTE
	GARAGE DOOR (OH-1)	20 A	3	M	1	793 VA	7926 VA					2	M	3	110 A	CONDENSING UNIT (ODU-1)	
--	--	--	--	--	3			793 VA	7926 VA			4	--	--	--	--	--
--	--	--	--	--	5					793 VA	7926 VA	6	--	--	--	--	--
	GARAGE DOOR (OH-2)	20 A	3	M	7	793 VA	1002 VA					8	M	2	20 A	FAN COILS (FCU-1,2,3,4)	
--	--	--	--	--	9			793 VA	1002 VA			10	--	--	--	--	--
--	--	--	--	--	11					793 VA	752 VA	12	M	2	20 A	FAN COILS (FCU-5,6,7,8)	
	GARAGE DOOR (OH-3)	20 A	3	M	13	793 VA	752 VA					14	--	--	--	--	--
--	--	--	--	--	15			793 VA	374 VA			16	M	2	20 A	FAN (DF-1)	
--	--	--	--	--	17					793 VA	374 VA	18	--	--	--	--	--
	GARAGE DOOR (OH-4)	20 A	3	M	19	793 VA	2284 VA					20	K	2	30 A	SCBA COMPRESSER	
--	--	--	--	--	21			793 VA	2284 VA			22	--	--	--	--	--
--	--	--	--	--	23					793 VA	180 VA	24	E	1	20 A	IRRIGATION CONTROLS	
	GARAGE DOOR (OH-5)	20 A	3	M	25	793 VA	421 VA					26	L	1	20 A	LIGHTING	
--	--	--	--	--	27			793 VA	1728 VA			28	M	1	20 A	ENERGY RECOVERY (ERV-2)	
--	--	--	--	--	29					793 VA	750 VA	30	E	2	30 A	GEN BLOCK HEATER	
	GARAGE DOOR (OH-6)	20 A	3	M	31	793 VA	750 VA					32	--	--	--	--	--
--	--	--	--	--	33			793 VA	1200 VA			34	E	1	20 A	GEN BATTERY CHARGER	
--	--	--	--	--	35					793 VA	180 VA	36	CO	1	20 A	REC GENERATOR	
	REC APPARATUS BAY	20 A	1	CO	37	1260 VA	1667 VA					38	L	3	30 A	EXHAUST PANEL	
	WALL HEATER (WH-1)	20 A	2	M	39			750 VA	1667 VA			40	--	--	--	--	--
--	--	--	--	--	41					750 VA	1667 VA	42	--	--	--	--	--
	ENERGY RECOVERY (ERV-3)	20 A	1	M	43	1728 VA	374 VA					44	M	2	20 A	FAN (DF-2)	
	DORM (FCU-9 TO 14)	20 A	2	M	45			161 VA	374 VA			46	--	--	--	--	--
--	--	--	--	--	47					161 VA	75 VA	48	M	1	20 A	RECIRC PUMP	
	GAS WATER HEATER (GWH-1)	20 A	1	M	49	120 VA	1000 VA					50	E	1	20 A	BAY CORD REELS	1
	FAN COIL (FCU-6,15,16)	20 A	2	M	51			1055 VA	1000 VA			52	E	1	20 A	BAY CORD REELS	1
--	--	--	--	--	53					1055 VA	1000 VA	54	E	1	20 A	BAY CORD REELS	1
	SITE LIGHTING	20 A	1	L	55	322 VA	1000 VA					56	E	1	20 A	BAY CORD REELS	1
	SITE LIGHTING	20 A	1	L	57			194 VA	0 VA			58	--	2	20 A	-SPARE-	
	LCP	20 A	1	L	59					500 VA	0 VA	60	--	--	--	--	--
1	WEST BAY EXISTING UNIT...	20 A	1	M	61	240 VA	0 VA					62	--	1	20 A	-SPARE-	
1	EAST BAY EXISTING UNIT...	20 A	1	M	63			240 VA	0 VA			64	--	1	20 A	-SPARE-	
	ENERGY RECOVERY (ERV-1)	20 A	1	M	65					1728 VA	0 VA	66	--	1	20 A	-SPARE-	
	-SPACE ONLY-	--	1	--	67	--	--					68	--	1	--	-SPACE ONLY-	
	-SPACE ONLY-	--	1	--	69			--	--			70	--	1	--	-SPACE ONLY-	
	-SPACE ONLY-	--	1	--	71					--	--	72	--	1	--	-SPACE ONLY-	
	TOTAL CONNECTED LOAD PER PHASE (VA)					25600 VA		24710 VA		21853 VA							
	TOTAL CONNECTED CURRENT PER PHASE (AMPS)					217 A		210 A		182 A							

LOAD CLASSIFICATION	CONNECTED LOAD	DEMAND FACTOR	ESTIMATED DEMAND	PANEL TOTALS	
EQUIPMENT	6880 VA	100.00%	6880 VA		
KITCHEN	4567 VA	100.00%	4567 VA	Total Conn. Load:	72163 VA
LIGHTING	6437 VA	125.00%	8046 VA	25% OF LARGEST MOTOR:	
Motor	52839 VA	111.25%	58784 VA	Total Est. Demand:	79717 VA
RECEPTACLE	1440 VA	100.00%	1440 VA	Total Conn. Current:	200 A
				Total Est. Demand Current:	221 A

PANELBOARD SCHEDULE

PANEL NAME: A

MOUNTING: RECESSED **ENCLOSURE:** NEMA 1 **DOOR TYPE:** DOOR-IN-DOOR
VOLTAGE: 120/208 Wye **PHASE:** 3 **WIRES:** 4 **Min. A.I.C. RATING:** 22,000A
LOCATION: MEP 116B **MAIN TYPE:** MLO **BUS RATING:** 400 A **MCB RATING:** N/A **BUS MATERIAL:** AL
FEED FROM: **SPD:** CAT A **NEUTRAL RATING:** 100% **ISOLATED GROUND:** N/A

BRANCH BREAKERS

KEYED NOTE	CIRCUIT DESCRIPTION	AMP	POLE	LOAD TYPE	CKT #	A	A	B	B	C	C	CKT #	LOAD TYPE	POLE	AMP	CIRCUIT DESCRIPTION	KEYED NOTE
	REC DECON	20 A	1	CO	1	720 VA	1200 VA					2	E	1	20 A	REC SAUNA	
	REC DAY ROOM/DINING	20 A	1	CO	3			1080 VA	180 VA			4	E	1	20 A	PWR DOOR ACTUATOR	
1	KITCHEN MIRCOWAVE	20 A	1	K	5					1500 VA	0 VA	6	--	1	20 A	-SPARE-	
1	KITCHEN MIRCOWAVE	20 A	1	K	7	1500 VA	900 VA					8	CO	1	20 A	REC DORM 1	
	REC KITCHEN COUNTER TOP	20 A	1	CO	9			720 VA	900 VA			10	CO	1	20 A	REC DORM 2	
1	KITCHEN FRIDGE	20 A	1	K	11					1200 VA	900 VA	12	CO	1	20 A	REC DORM 3	
1	KITCHEN FRIDGE	20 A	1	K	13	1200 VA	900 VA					14	CO	1	20 A	REC DORM 4	
1	KITCHEN FRIDGE	20 A	1	K	15			1200 VA	900 VA			16	CO	1	20 A	REC DORM 5	
	TELECOM RACK	20 A	1	CO	17					360 VA	900 VA	18	CO	1	20 A	REC DORM 6	
1	KITCHEN ISLAND MW	20 A	1	K	19	1500 VA	360 VA					20	CO	1	20 A	REC EXTERIOR	
1	KITCHEN ISLAND DISP	20 A	1	M	21			1176 VA	180 VA			22	CO	1	20 A	WATER COOLER	1,6
1	KITCHEN ISLAND DW	20 A	1	K	23					1200 VA	900 VA	24	CO	1	20 A	REC LOBBY/CORRIDOR	
	REC EXTERIOR	20 A	1	CO	25	720 VA	180 VA					26	CO	1	20 A	REC DORM RR	
	STAIR CLIMBER	20 A	1	CO	27			180 VA	180 VA			28	CO	1	20 A	REC DORM RR	
	REC GYM TREADMILL	20 A	1	E	29					1200 VA	180 VA	30	CO	1	20 A	REC DORM RR	
	REC GYM TREADMILL	20 A	1	E	31	1200 VA	180 VA					32	CO	1	20 A	REC PUBLIC RR	
	REC GYM	20 A	1	CO; E	33			1360 VA	720 VA			34	CO	1	20 A	REC RADIO CHARGING	
	REC GYM	20 A	1	CO; E	35					1220 VA	180 VA	36	CO	1	20 A	REC GYM	
	LIGHTS GYM	20 A	1	L	37	216 VA	1080 VA					38	CO	1	20 A	REC TOOL/SCBA	
	REC CAPT OFFICE/FLEX	20 A	1	CO	39			720 VA	720 VA			40	CO	1	20 A	REC TURNOUT	
	ICE MACHINE	20 A	1	E	41					1200 VA	540 VA	42	CO	1	20 A	REC MED/PANT/STOR	
1	REC LAUNDRY	20 A	1	CO	43	900 VA	360 VA					44	CO	1	20 A	REC TTB	
1	CLOTHES DRYER	40 A	2	K	45			2500 VA	360 VA			46	CO	1	20 A	TELECOM RACK	
--	--	--	--	--	47					2500 VA	360 VA	48	CO	1	20 A	TELECOM RACK	
1	CLOTHES WASHER	20 A	1	E	49	1500 VA	500 VA					50	L	1	20 A	ACCESS CONTROL PANEL	
1	CLOTHES DRYER	40 A	2	K	51			2500 VA	360 VA			52	CO	1	20 A	REC TTB	
--	--	--	--	--	53					2500 VA	180 VA	54	CO	1	20 A	REC MEP	
1	CLOTHES WASHER	20 A	1	E	55	1500 VA	764 VA					56	L	1	20 A	BAY LIGHTING	
	FACP	20 A	1	E	57			0 VA	1517 VA			58	L	1	20 A	LTG SM ROOMS	
	NAC	20 A	1	E	59					0 VA	900 VA	60	L	1	20 A	LTG OPEN AREAS/HALLS	
	APPARATUS BAY LTG	20 A	1	L	61	760 VA	0 VA					62	--	1	20 A	-SPARE-	
	REC TOOL ROOM	20 A	1	CO	63			900 VA	0 VA			64	--	1	20 A	-SPARE-	
	-SPARE-	20 A	1	--	65					0 VA	0 VA	66	--	1	20 A	-SPARE-	
	-SPARE-	20 A	1	--	67	0 VA	0 VA					68	--	3	60 A	SPD	
	-SPARE-	20 A	1	--	69			0 VA	0 VA			70	--	--	--	--	--
	-SPARE-	20 A	1	--	71					0 VA	0 VA	72	--	--	--	--	--
	TOTAL CONNECTED LOAD PER PHASE (VA)					43741 VA		43063 VA		39773 VA							
	TOTAL CONNECTED CURRENT PER PHASE (AMPS)					369 A		363 A		331 A							

LOAD CLASSIFICATION	CONNECTED LOAD	DEMAND FACTOR	ESTIMATED DEMAND	PANEL TOTALS	
EQUIPMENT	16360 VA	100.00%	16360 VA		
KITCHEN	23867 VA	65.00%	15514 VA	Total Conn. Load:	126577 VA
LIGHTING	11094 VA	125.00%	13868 VA	25% OF LARGEST MOTOR:	
Motor	54015 VA	111.01%	59960 VA	Total Est. Demand:	121321 VA
RECEPTACLE	21240 VA	73.54%	15620 VA	Total Conn. Current:	351 A
				Total Est. Demand Current:	337 A

MECHANICAL EQUIPMENT SCHEDULE

UNIT NAME TYPE	No.	DESCRIPTION	ELECTRICAL INPUT LOAD	TYPE	VOLTS	PHASE	AMPS	FEEDER QTY	CONDUIT SIZE	WIRE QTY	WIRE SIZE	EQPT GND	NOTE	STARTER SIZE	OCP SIZE	OCP POLE	DISCONNECT SIZE	DISCONNECT POLE	ENCLOSURE	REMARKS
(E)WH	1	EXISTING GAS WATER HEATER	1	MCA	120 V	1	1 A	1	3/4"	2	12	12	9A	-	-	-	30	1	NEMA 1	
BC	1	CIRCULATION FAN	1.6	MCA	208 V	1	1.6 A	1	3/4"	2	12	12	1A	-	-	-	1HP	2	NEMA 1	
BC	2	CIRCULATION FAN	0.8	MCA	208 V	1	0.8 A	1	3/4"	2	12	12	1A	-	-	-	1HP	2	NEMA 1	
CAS	1	CASSETT	0.35	MCA	208 V	1	0.4 A	1	3/4"	2	12	12	1A	-	-	-	1HP	2	NEMA 1	
CAS	2	CASSETT	0.24	MCA	208 V	1	0.2 A	1	3/4"	2	12	12	1A	-	-	-	1HP	2	NEMA 1	
CAS	3	CASSETT	0.24	MCA	208 V	1	0.2 A	1	3/4"	2	12	12	1A	-	-	-	1HP	2	NEMA 1	
CAS	4	CASSETT	0.24	MCA	208 V	1	0.2 A	1	3/4"	2	12	12	1A	-	-	-	1HP	2	NEMA 1	
CAS	5	CASSETT	0.24	MCA	208 V	1	0.2 A	1	3/4"	2	12	12	1A	-	-	-	1HP	2	NEMA 1	
CAS	6	CASSETT	0.24	MCA	208 V	1	0.2 A	1	3/4"	2	12	12	1A	-	-	-	1HP	2	NEMA 1	
DCP	1	CIRC PUMP	0.075	KVA	120 V	1	0.6 A	1	3/4"	2	12	12	13A	-	-	-	-	-	-	
DF	1	DESTRATIFICATION FAN	3.6	FLA	208 V	1	3.6 A	1	3/4"	2	12	12	10A	-	20	2	30	2	NEMA 1	
DF	2	DESTRATIFICATION FAN	3.6	FLA	208 V	1	3.6 A	1	3/4"	2	12	12	10A	-	20	2	30	2	NEMA 1	
ERV	1	ENERGY RECOVERY UNIT	14.4	FLA	120 V	1	14.4 A	1	3/4"	2	12	12	10A	-	20	1	30	1	NEMA 1	
ERV	2	ENERGY RECOVERY UNIT	14.4	FLA	120 V	1	14.4 A	1	3/4"	2	12	12	10A	-	20	1	30	1	NEMA 1	
ERV	3	ENERGY RECOVERY UNIT	14.4	FLA	120 V	1	14.4 A	1	3/4"	2	12	12	10A	-	20	1	30	1	NEMA 1	
ERV	4	ENERGY RECOVERY UNIT	22.1	FLA	208 V	1	22.1 A	1	3/4"	2	10	10	10A	-	30	2	30	2	NEMA 3R	
FCU	1	FAN COIL UNIT	1.75	MCA	208 V	1	1.8 A	1	3/4"	2	12	12	1A	-	-	-	1HP	2	NEMA 1	
FCU	2	FAN COIL UNIT	4.38	MCA	208 V	1	4.4 A	1	3/4"	2	12	12	1A	-	-	-	1HP	2	NEMA 1	
FCU	3	FAN COIL UNIT	1.75	MCA	208 V	1	1.8 A	1	3/4"	2	12	12	1A	-	-	-	1HP	2	NEMA 1	
FCU	4	FAN COIL UNIT	1.75	MCA	208 V	1	1.8 A	1	3/4"	2	12	12	1A	-	-	-	1HP	2	NEMA 1	
FCU	5	FAN COIL UNIT	2.13	MCA	208 V	1	2.1 A	1	3/4"	2	12	12	1A	-	-	-	1HP	2	NEMA 1	
FCU	6	FAN COIL UNIT	4.38	MCA	208 V	1	4.4 A	1	3/4"	2	12	12	1A	-	-	-	1HP	2	NEMA 1	
FCU	7	FAN COIL UNIT	1.75	MCA	208 V	1	1.8 A	1	3/4"	2	12	12	1A	-	-	-	1HP	2	NEMA 1	
FCU	8	FAN COIL UNIT	1.75	MCA	208 V	1	1.8 A	1	3/4"	2	12	12	1A	-	-	-	1HP	2	NEMA 1	
FCU	15	FAN COIL UNIT	2.88	MCA	208 V	1	2.9 A	1	3/4"	2	12	12	1A	-	-	-	1HP	2	NEMA 1	
FCU	16	FAN COIL UNIT	2.88	MCA	208 V	1	2.9 A	1	3/4"	2	12	12	1A	-	-	-	1HP	2	NEMA 1	
FCU	17	FAN COIL UNIT	1.75	MCA	208 V	1	1.8 A	1	3/4"	2	12	12	1A	-	-	-	1HP	2	NEMA 1	
FCU	18	FAN COIL UNIT	2.88	MCA	208 V	1	2.9 A	1	3/4"	2	12	12	1A	-	-	-	1HP	2	NEMA 1	
FCU	19	FAN COIL UNIT	5.6	MCA	208 V	3	5.6 A	1	3/4"	3	12	12	10A	-	20	3	30	3	NEMA 1	
FCU	20	FAN COIL UNIT	7.12	MCA	208 V	3	7.1 A	1	3/4"	3	12	12	10A	-	20	3	30	3	NEMA 1	
GWH	1	GAS WATER HEATER	1	FLA	120 V	1	1 A	1	3/4"	2	12	12	15A	-	20	1	30	1	-	
ODU	1	OUTDOOR CONDENSING UNIT	66	MCA	208 V	3	66 A	1	1 1/4"	3	2	8	10A	-	90	3	100	3	NEMA 3R	
ODU	2	OUTDOOR CONDENSING UNIT	54	MCA	208 V	3	54 A	1	1 1/4"	3	4	8	10A	-	70	3	100	3	NEMA 3R	
OH	1	OVERHEAD DOOR	1.5	HP	208 V	3	6.6 A	1	3/4"	3	12	12	10A	-	10	3	30	3	NEMA 1	
OH	2	OVERHEAD DOOR	1.5	HP	208 V	3	6.6 A	1	3/4"	3	12	12	10A	-	10	3	30	3	NEMA 1	
OH	3	OVERHEAD DOOR	1.5	HP	208 V	3	6.6 A	1	3/4"	3	12	12	10A	-	10	3	30	3	NEMA 1	
OH	4	OVERHEAD DOOR	1.5	HP	208 V	3	6.6 A	1	3/4"	3	12	12	10A	-	10	3	30	3	NEMA 1	
OH	5	OVERHEAD DOOR	1.5	HP	208 V	3	6.6 A	1	3/4"	3	12	12	10A	-	10	3	30	3	NEMA 1	
OH	6	OVERHEAD DOOR	1.5	HP	208 V	3	6.6 A	1	3/4"	3	12	12	10A	-	10	3	30	3	NEMA 1	
RCP	1	RADIANT CEILING PANEL	0.5	KVA	208 V	1	2.4 A	1	3/4"	2	12	12	9A	-	-	-	30	2	NEMA 1	
WH	1	WALL HEATER	1.5	KVA	208 V	1	7.2 A	1	3/4"	2	12	12	9A	-	-	-	30	2	NEMA 1	

STARTER/DISCONNECT/CONNECTION AT UNIT NOTES:

1. MANUAL STARTER WITH THERMAL OVERLOAD
2. MANUAL STARTER WITH THERMAL OVERLOAD PROTECTION & LOW VOLTAGE RELAY / CONTACTOR FOR ATC CONTROL.
3. COMBINATION MAGNETIC STARTER / FUSED DISCONNECT
4. COMBINATION MAGNETIC STARTER / MOTOR CIRCUIT PROTECTOR (MCP)
5. COMBINATION MAGNETIC STARTER / NON-FUSED DISCONNECT.
6. COMBINATION VARIABLE FREQUENCY DRIVE / MOTOR CIRCUIT PROTECTOR (MCP)
7. MAGNATIC STARTER
8. REDUCED VOLTAGE STARTER
9. NON-FUSED DISCONNECT SWITCH
10. FUSED DISCONNECT SWITCH
11. ENCLOSED CIRCUIT BREAKER
12. DIRECT CONNECTION
13. DUPLEX RECEPTACLE OUTLET
14. SPECIAL PURPOSE OUTLET
15. TOGGLE SWITCH
16. PILOT SWITCH
17. FUSED ELEVATOR SWITCH
18. MOTOR RATED SWITCH
19. CONTROL PANEL

A. FURNISHED, INSTALLED & CONNECTED UNDER DIVISION 26.
B. FURNISHED & INSTALLED UNDER ANOTHER DIVISION REQUIRING CONNECTIONS UNDER DIVISION 26
C. FURNISHED UNDER ANOTHER DIVISION BUT INSTALLED AND CONNECTED UNDER DIVISION 26
D. FURNISHED, INSTALLED & CONNECTED UNDER ANOTHER DIVISION
E. FURNISHED BY OWNER, INSTALLED & CONNECTED BY DIVISION 26

GENERAL NOTES:

1. CONTRACTOR SHALL BE RESPONSIBLE TO COORDINATE AND SIZE FEEDER, STARTER, DISCONNECT AND OVERCURRENT PROTECTION IN ACCORDANCE WITH THE MANUFACTURER'S RECOMMENDATIONS OF ACTUAL EQUIPMENT SUPPLIED.
2. ALL CONDUCTORS USED SHALL BE COPPER.
3. ELECTRICAL CONTRACTOR SHALL REVIEW MECHANICAL DRAWINGS FOR ANY ADDITIONAL REQUIREMENTS PRIOR TO BID.
4. ELECTRICAL CONTRACTOR SHALL REVIEW OTHER TRADE SUBMITTALS FOR ANY EQUIPMENT REQUIRING CONNECTION BY ELECTRICAL CONTRACTOR AND COORDINATE ALL REQUIREMENTS PRIOR TO ROUGH-IN.
5. SIZE ALL FUSES IN ACCORDANCE WITH MANUFACTURER'S RECOMMENDATIONS.

PANELBOARD SCHEDULE

PANEL NAME: C

MOUNTING: SURFACE **ENCLOSURE:** NEMA 1 **DOOR TYPE:** DOOR-IN-DOOR
VOLTAGE: 120/208 Wye **PHASE:** 3 **WIRES:** 4 **Min. A.I.C. RATING:** 10,000A
LOCATION: STORAGE 136 **MAIN TYPE:** MLO **BUS RATING:** 225 A **MCB RATING:** N/A **BUS MATERIAL:** AL
FEED FROM: **SPD:** CAT A **NEUTRAL RATING:** 100% **ISOLATED GROUND:** N/A

BRANCH BREAKERS

KEYED NOTE	CIRCUIT DESCRIPTION	AMP	POLE	LOAD TYPE	CKT #	A	A	B	B	C	C	CKT #	LOAD TYPE	POLE	AMP	CIRCUIT DESCRIPTION	KEYED NOTE
	GFI RESTROOMS 131/133	20 A	1	CO	1	360 VA	6485 VA					2	M	3	90 A	CONDENSING UNIT (ODU-2)	
	REC JAN, HALL, STORAGE	20 A	1	CO	3			540 VA	6485 VA			4	--	--	--	--	--
	REC KITCHEN ISLAND	20 A	1	CO	5					180 VA	6485 VA	6	--	--	--	--	--
	KITCHEN FOOD WARMER	20 A	1	K	7	1500 VA	855 VA					8	M	3	20 A	FAN COIL (FCU-20)	
	REC KITCHEN COUNTER TOP	20 A	1	CO	9			540 VA	855 VA			10	--	--	--	--	--
	REC KITCHEN COUNTER TOP	20 A	1	CO	11					360 VA	855 VA	12	--	--	--	--	--
	REC KITCHEN DW	20 A	1	K	13	1200 VA	250 VA					14	M	2	20 A	HEAT PANEL (RCP-1)	
1	REC KITCHEN FRIDGE	20 A	1	K	15			1200 VA	250 VA			16	--	--	--	--	--
1	WATER COOLER	20 A	1	E	17					600 VA	1093 VA	18	L	1	20 A	LTG COMMUNITY ROOM	
1	REC KITCHEN DISP	20 A	1	M	19	1176 VA	720 VA					20	CO	1	20 A	REC COMMUNITY ROOM 130	
	REC FOOD WARMING	20 A	1	CO	21			360 VA	2298 VA			22	M	2	20 A	ENERGY RECOVERY (ERV-4)	
	REC FOOD WARMING	20 A	1	CO	23					360 VA	2298 VA	24	--	--	--	--	--
	REC COMMUNITY ROOM	20 A	1	CO	25	1080 VA	180 VA					26	CO	1	20 A	REC ROOF	
	REC RADIO CHARGING	20 A	1	CO	27			720 VA	360 VA			28	E	1	20 A	PWR DOOR ACTUATORS	
	REC COMMUNITY ROOM	20 A	1	CO	29					1080 VA	0 VA	30	--	1	20 A	-SPARE-	
	REC EXTERIOR	20 A	1	CO	31	720 VA	0 VA					32	--	1	20 A	-SPARE-	
	FAN COILS (FCU-17, 18)	20 A	2	M	33			565 VA	0 VA			34	--	1	20 A	-SPARE-	
--	--	--	--	--	35					565 VA	0 VA	36	--	1	20 A	-SPARE-	
	FAN COIL (FCU-19)	20 A	3	M	37	672 VA	0 VA					38	--	1	20 A	-SPARE-	
--	--	--	--	--	39			672 VA	0 VA			40	--	1	20 A	-SPARE-	
--	--	--	--	--	41					672 VA	0 VA	42	--	1	20 A	-SPARE-	
	LTG COMMUNITY CNTR	20 A	1	L	43	374 VA	0 VA					44	--	1	20 A	-SPARE-	
	(E) GAS WATER HEATER	20 A	1	M	45			120 VA	0 VA			46	--	1	20 A	-SPARE-	
	-SPARE-	20 A	1	--	47					0 VA	0 VA	48	--	1	20 A	-SPARE-	
	-SPARE-	20 A	1	--	49	0 VA	--					50	--	1	--	-SPACE ONLY-	
	-SPARE-	20 A	1	--	51			0 VA	--			52	--	1	--	-SPACE ONLY-	
	-SPARE-	20 A	1	--	53					0 VA	--	54	--	1	--	-SPACE ONLY-	
	-SPACE ONLY-	--	1	--	55	--	0 VA					56	--	3	60 A	SPD	
	-SPACE ONLY-	--	1	--	57			--	0 VA			58	--	--	--	--	--
	-SPACE ONLY-	--	1	--	59					--	0 VA	60	--	--	--	--	--
	TOTAL CONNECTED LOAD PER PHASE (VA)					15572 VA		14965 VA		14549 VA							
	TOTAL CONNECTED CURRENT PER PHASE (AMPS)					130 A		125 A		121 A							

LOAD CLASSIFICATION	CONNECTED LOAD	DEMAND FACTOR	ESTIMATED DEMAND	PANEL TOTALS	
EQUIPMENT	960 VA	100.00%	960 VA		
KITCHEN	3900 VA	90.00%	3510 VA	Total Conn. Load:	45086 VA
LIGHTING	1467 VA	125.00%	1834 VA	25% OF LARGEST MOTOR:	
Motor	31559 VA	115.41%	36423 VA	Total Est. Demand:	49927 VA
RECEPTACLE	7200 VA	100.00%	7200 VA	Total Conn. Current:	125 A
				Total Est. Demand Current:	139 A

PANEL LEGEND

B	A
	C

PANELBOARD SCHEDULE KEYED NOTE:

1. PROVIDE CLASS A GROUND FAULT INTERRUPTER TYPE CIRCUIT BREAKER.
2. PROVIDE ARC FAULT CIRCUIT INTERRUPTER TYPE CIRCUIT BREAKER.
3. PROVIDE 30 MILLIAMPERE EQUIPMENT GROUND FAULT PROTECTOR TYPE CIRCUIT BREAKER.
4. PROVIDE SHUNT TRIP CIRCUIT BREAKER WITH 120 V COIL.
5. PROVIDE HACR RATED CIRCUIT BREAKER.
6. PROVIDE HANDLE CLAMP FOR HOLDING CIRCUIT BREAKER IN THE "ON" OR "OFF" POSITION.
7. PROVIDE SWITCHING RATED CIRCUIT BREAKER.
8. PROVIDE NEW CIRCUIT BREAKER IN EXISTING PANELBOARD (WHERE PANEL IS LABELED AS EXISTING) OF SAME MANUFACTURER AND A.I.C. RATING AS EXISTING.
9. EXISTING LOAD.

Babcock Design

Salt Lake City
52 Exchange Place
Salt Lake City, UT 84111
801.531.1144

Boise
800 W Main Street, Suite 940
Boise, ID 83702
208.424.7675

babcockdesign.com

Consultant

ENVISION ENGINEERING
240 E. MORRIS AVE. SUITE 200
SALT LAKE CITY, UT 84115
P (801) 534-1130
www.envisioneng.com
ENV:2025-252

CITY OF ALPINE

ALPINE FIRE STATION

50 E 100 N ALPINE, UT 84004

Revisions

Num.	Description	Date

Project Number: 25116
Original Issue: 04.16.2026
Project Status: CONSTRUCTION DOCUMENTS

The information and content represented herein is considered by law the architect's instruments of service and are the property of Babcock Design. They are available for limited review and evaluation by clients, consultants, contractors, government agencies, vendors, and office personnel only in accordance with this notice. They are intended for use only for the project specified and are to be used for no other purpose or project including additions to or modification of the completed project. No part thereof may be copied, reproduced, photographed, modified, published, uploaded, transmitted, disclosed, sold, distributed to others in any way including in digital form, or otherwise used without the prior written consent of Babcock Design.

COPYRIGHT © 2025 BABCOCK DESIGN

Stamp

PROFESSIONAL ENGINEER 9808039-2202 ALEKSANDAR RANKOVIC STATE OF UTAH
04/16/2026

Sheet Title

ELECTRICAL SCHEDULES

Sheet Number

EE803

FIRE ALARM SCOPE MATRIX						
ITEM	FURNISHED BY		INSTALLED BY		CONNECTED AND TESTED BY	
	OWNER	CONTRACTOR	OWNER	CONTRACTOR	OWNER	CONTRACTOR
FIRE ALARM DEVICES (SMOKE DETECTORS, HORN STROBES, ETC.)		X		X		X
FIRE ALARM CABLES		X		X		X
RACEWAY - CONDUITS, BOXES, ETC.		X		X		X
ALL CONSUMABLES (TAPE, STRING, TIE-WRAPS, VELCRO, ANCHORS, BOLTS, NUTS, SCREWS, WRAP LABELS, PRINTED LABELS, ETC.)		X		X		X

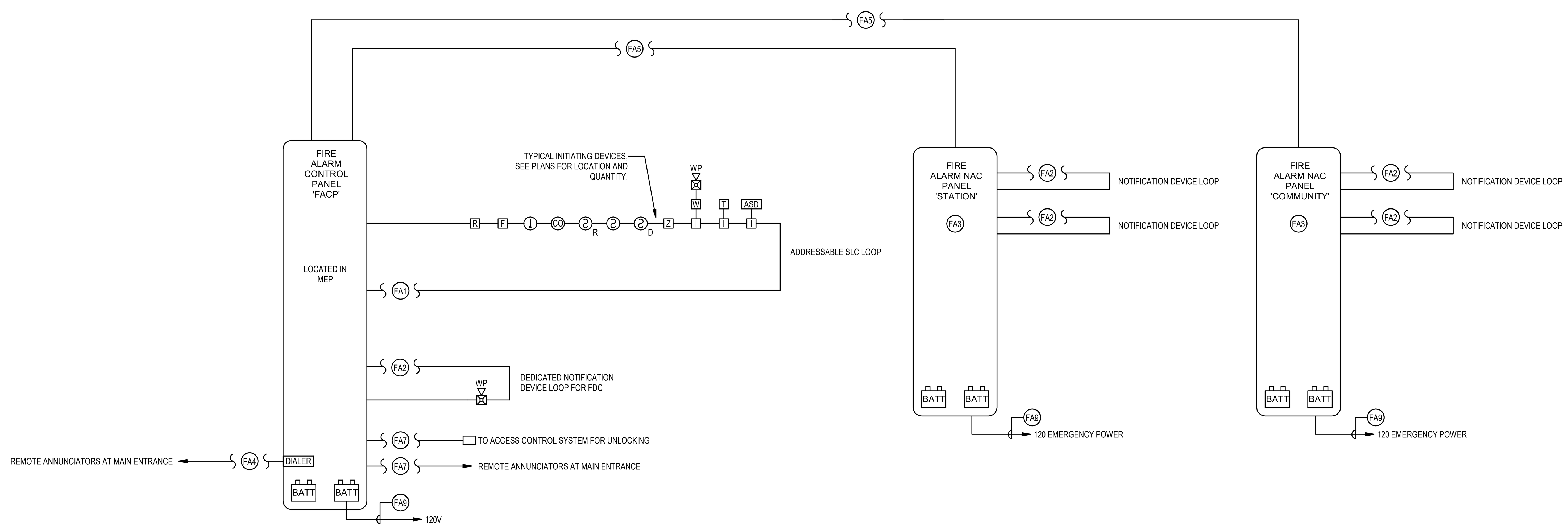

1 FIRE ALARM RISER DIAGRAM
12" = 1'-0"

FIRE ALARM SYSTEM GENERAL NOTES:

1. PROVIDE ADDRESSABLE FIRE ALARM SYSTEM. REFER TO THE SPECIFICATIONS FOR ADDITIONAL INFORMATION.
2. THE SYSTEM SHALL BE PROGRAMMED SO THAT IF ANY INITIATION DEVICE IS ACTUATED, AN ALARM SIGNAL WHICH IS AUDIBLE THROUGHOUT THE BUILDING ZONES AS REQUIRED BY THE FIRE MARSHAL WILL BE ACTIVATED.
3. WIRING SHALL BE CONTINUOUS FROM ONE DEVICE TO ANOTHER. NO SPLICING IS ALLOWED. REFER TO THE SPECIFICATIONS FOR THE OWNER CABLING REQUIREMENTS.
4. PROVIDE FIRE ALARM MAP OF THE BUILDING SHOWING ALL FIRE ALARM SYSTEM DEVICES. MAP TO INCLUDE BUT NOT LIMITED TO THE FOLLOWING:
   A. EXACT LOCATIONS OF ALL DEVICES, FIRE ALARM CONTROL PANEL AND NAC PANELS.
   B. ROOM NAMES
   C. ALL DEVICE ADDRESS SHALL BE INDICATED ON THE DRAWINGS.
   D. ALL MAPS SHALL BE 11"X17". PROVIDE ONE SET IN A SLEEVED 3 RING BINDER. DELIVER 3 RING BINDER WITH MAPS TO THE ELECTRICAL ENGINEER FOR REVIEW AND APPROVAL AS PART OF THE CLOSE DOCUMENTS. REFER TO THE SPECIFICATIONS FOR ADDITIONAL INFORMATION.
5. FIRE ALARM CABLING SHALL BE RUN IN CONDUIT. MINIMUM CONDUIT SIZE SHALL BE 3/4". ALL CONDUIT, JUNCTION BOXES AND FITTINGS SHALL BE RED IN COLOR AND LABELED PER ALL OWNER STANDARDS. ALL CABLING SHALL BE RATED FOR USE IN A FIRE ALARM SYSTEM PER ALL NFPA AND NEC REQUIREMENTS.
6. THE FIRE ALARM SYSTEM SUPPLIER SHALL PROVIDE COMPUTER DRAFTED SHOP DRAWINGS OF THE ENTIRE FIRE ALARM SYSTEM USING FLOOR PLANS PROVIDED BY THE ENGINEER. SHOP DRAWINGS TO INCLUDE BATTERY CALCULATIONS, VOLTAGE DROP CALCULATIONS, PLANS, SECTIONS, ELEVATIONS, FINAL DEVICE LOCATIONS AND ADDRESS, CONDUIT SIZE AND ROUTING AND ALL CONDUCTOR SIZES (SEE SPEC FOR OWNER STANDARDS). TYPICAL RISERS AND CALCULATIONS WILL NOT BE ACCEPTED. ALL SHOP DRAWINGS SHALL BE PREPARED AND APPROVED BY A NICET CERTIFIED FIRE ALARM TECHNICIAN, LEVEL III OR GREATER.
7. ALL NOTIFICATION DEVICE CIRCUIT VOLTAGE DROP CALCULATIONS SHALL BE DONE IN COMPLIANCE WITH NFPA 72. THE FIRE ALARM SYSTEM SUPPLIER TO DETERMINE THE AMOUNT NOTIFICATION DEVICE CIRCUITS THAT ARE REQUIRED BASED ON THE NUMBER OF THE NOTIFICATION DEVICES SHOWN ON THE DRAWINGS. THE FIRE ALARM SUPPLIER SHALL DETERMINE THE AMOUNT OF 'NAC' PANELS THAT WILL BE REQUIRED BASED ON THE QUANTITY OF NOTIFICATION DEVICE CIRCUITS.
8. FAN SHUT DOWN RELAY(S) IN THE AIR HANDLING EQUIPMENT SHALL BE NORMALLY ENERGIZED, AND CONNECTED THROUGH AND CONTROLLED BY A NORMALLY CLOSED CONTACT IN THE FIRE ALARM PANEL, OR A NORMALLY CLOSED CONTACT OF A REMOTE RELAY UNDER SUPERVISION BY THE MAIN PANEL. THE RELAYS WILL TRANSFER ON ALARM, AND SHALL NOT RESTORE UNTIL THE PANEL IS RESET.
9. AUDIBLE ANNUNCIATION DEVICES SHALL BE SILENCE-ABLE VIA THE FACP FRONT PANEL WHILE ALLOWING VISUAL ANNUNCIATION DEVICES TO REMAIN IN ALARM.
10. SUBMIT TO THE LOCAL AUTHORITY HAVING JURISDICTION, A MINIMUM OF TWO SETS OF PLANS, COMPLETE WITH MANUFACTURER CUT SHEETS, AND BATTERY CALCULATIONS AND FIRE COMMAND CENTER LAYOUT. PLANS MUST BE INK SIGNED BY A NICET LEVEL III OR BETTER IN FIRE ALARM SYSTEMS.
11. VERIFY AND COMPLY WITH ALL CURRENT STATE, LOCAL AND NATIONAL CODES. COMPLY WITH ALL NEC AND NFPA REQUIREMENTS.
12. UPON CLOSE OUT OF THE PROJECT THE FIRE ALARM SYSTEM SUPPLIER TO PROVIDE A CD(S) WITH CAD AND PDF DRAWINGS OF THE BUILDING FIRE ALARM MAP, CAD AND PDF AS-BUILT DRAWINGS, GENERAL PROGRAMMING, SITE SPECIFIC PROGRAMMING, O&M MANUALS FOR THE FIRE ALARM SYSTEM AND A TUTORIAL ON PROGRAMMING THE SYSTEM. REFER TO THE SPECIFICATIONS FOR ADDITIONAL INFORMATION.
13. CONTRACTOR IS RESPONSIBLE FOR MAKING AND OBTAINING APPROVAL FOR ALL NECESSARY ADJUSTMENTS IN CIRCUITRY AS REQUIRED ACCOMMODATING THE RELOCATION OF EQUIPMENT AND/OR DEVICES WHICH ARE AFFECTED BY ANY AUTHORIZED CHANGE. ALL CHANGES SHALL BE CLEARLY INDICATED ON THE RECORD DRAWINGS.
14. FIRE RATINGS SHALL BE MAINTAINED FOR ALL PENETRATIONS THROUGH FIRE-RATED CONSTRUCTION.
15. THE POWER CIRCUIT TO THE FACP AND TO THE FIRE ALARM POWER SUPPLIES SHALL BE ON A DEDICATED 120V, 20A BRANCH CIRCUIT BREAKER, AND SHALL HAVE A RED MARKING, LOCK-ON PROVISION AND SHALL BE IDENTIFIED AS FIRE ALARM CIRCUIT CONTROL. THE LOCATION OF THE CIRCUIT DISCONNECT MEANS (CIRCUIT BREAKER) SHALL BE PERMANENTLY IDENTIFIED AT THE FIRE ALARM CONTROL UNIT.
16. POWER-LIMITED AND NONPOWER-LIMITED CIRCUIT WIRING MUST REMAIN SEPARATED IN CABINET. ALL POWER-LIMITED CIRCUIT WIRING MUST REMAIN AT LEAST 0.25 AWAY FROM ANY NON POWER-LIMITED CIRCUIT WIRING. FURTHERMORE, ALL POWER-LIMITED AND NONPOWER-LIMITED CIRCUIT WIRING MUST ENTER AND EXT THE CABINET THROUGH DIFFERENT KNOCKOUTS AND/OR SEPARATE CONDUITS.
17. MAINTAIN 40 PERCENT CONDUIT FILL RATIO AS PER NEC REGULATIONS.
18. WHEN UTILIZING SHIELDED CABLES, TIE SHIELDS THROUGH AND INSULATE AT EACH JUNCTION BOX. INSULATE AND TAPE BACK TO BACK END OF JUNCTION BOX.
19. WHEN UTILIZING CLASS A CIRCUITS, SEPARATE OUTGOING AND RETURN CONDUCTORS BY A MINIMUM OF 12" WHERE RUN VERTICALLY AND 48" WHERE RUN HORIZONTALLY.
20. ALL FIRE ALARM CABLING SHALL BE ACCEPTABLE TO THE FIRE ALARM EQUIPMENT MANUFACTURER FOR THE INTENDED PURPOSE.
21. FIRE ALARM CABLE INSTALLED IN DUCTS, PLENUMS, AND OTHER SPACES USED FOR ENVIRONMENTAL AIR SHALL BE TYPE FPLP.
22. FIRE ALARM CABLES INSTALLED IN VERTICAL RUNS AND PENETRATE MORE THAN ONE FLOOR OR CABLES INSTALLED IN VERTICAL SHAFTS SHALL BE TYPE FPLR.
23. SMOKE DETECTORS SHALL NOT BE INSTALLED UNTIL AFTER CONSTRUCTION CLEAN-UP IS COMPLETED AND FINAL.
24. LOCATE SMOKE DETECTORS A MINIMUM OF THREE(3) FEET FROM MECHANICAL DIFFUSERS.
25. PROVIDE SYNCHRONIZATION OF ALL VISUAL NOTIFICATION APPLIANCE CIRCUITS.
26. UPON COMPLETION OF THE FIRE ALARM SYSTEM INSTALLATION AND PROGRAMMING, THE INSTALLING CONTRACTOR SHALL PERFORM FINAL TESTING OF THE ENTIRE SYSTEM, PER ALL APPLICABLE CODES, AND SHALL COORDINATE AND PERFORM A FINAL FIRE ALARM INSPECTION.
27. INSTALLING CONTRACTOR SHALL, PHYSICALLY, LABEL ALL INITIATING DEVICES. THESE LABELS SHALL BE IN PLACE PRIOR TO START-UP AND TESTING.

SYSTEMS GENERAL NOTES:

1. COORDINATE ALL WALL MOUNTED LOCATIONS WITH THE ARCHITECT.
2. DO NOT LOCATE ANY FIRE ALARM DEVICES BEHIND DOORS OR SHELVING. REFER TO THE ARCHITECTURAL DRAWINGS FOR SHELVING LOCATIONS.
3. THE DIVISION 28 CONTRACTOR SHALL DETERMINE THE EXACT ROUTING OF ALL CONDUITS IN THE FIELD. THIS PLAN REPRESENTS A SCHEMATIC REPRESENTATION OF DEVICE LOCATIONS, AND CONDUIT RUNS.
4. ALL CONDUITS THAT TERMINATE ABOVE THE CEILING SHALL TERMINATE WITH NYLON BUSHING.
5. CONTRACTOR SHALL COORDINATE ALL CEILING MOUNTED DEVICES WITH THE LIGHTING PLANS. RELOCATE DEVICES AS NECESSARY. RELOCATED DEVICES SHALL COMPLY WITH ALL NFPA SPACING REQUIREMENTS.
6. ALL FIRE ALARM DEVICE LOCATIONS, EQUIPMENT LOCATIONS, RISER DIAGRAM, ETC., ARE SCHEMATIC IN NATURE AND ARE SHOWN TO PROVIDE INTENT OF THE FIRE ALARM SYSTEM TO BE PROVIDED. FIRE ALARM SYSTEM SUPPLIER SHALL PROVIDE BID AND SHOP DRAWINGS THAT INCLUDE A FULL CODE COMPLIANT DESIGN INCLUDING ALL NOTIFICATION AND INITIATION DEVICES REQUIRED WHETHER SHOWN OR NOT.

KEYED NOTES (#)

FA1 EXTEND COMMUNICATION CABLES TO ADDRESSABLE FIRE ALARM DEVICES INCLUDING SMOKE AND HEAT DETECTORS, DUCT SMOKE DETECTORS, MONITOR MODULES, CONTROL MODULES, AND MANUAL PULL STATIONS. REFER TO THE FIRE ALARM PLANS FOR QUANTITIES, DEVICE TYPES AND LOCATIONS. INCLUDE 24VDC POWER WIRING AS REQUIRED FOR CONTROL MODULES AND DUCT SMOKE DETECTORS. PROVIDE A MINIMUM OF 20% SPARE CAPACITY, PER ADDRESSABLE LOOP, FOR FUTURE USE.

FA2 EXTEND NOTIFICATION CABLES TO FIRE ALARM HORN/STROBES AND STROBES. REFER TO THE FIRE ALARM PLANS FOR QUANTITIES, DEVICE TYPES AND LOCATIONS. PROVIDE SYNC MODULES FOR STROBES AS REQUIRED TO COMPLY WITH ALL APPLICABLE ADA CODES. CIRCUIT PER ALL MANUFACTURERS RECOMMENDATIONS. PROVIDE A MINIMUM OF 20% SPARE CAPACITY, IN FACP AND EACH NAC PANEL, FOR FUTURE USE.

FA3 PROVIDE NOTIFICATION APPLIANCE CIRCUIT PANEL (NAC) INCLUDING HORN/STROBE AND STROBE CIRCUIT MODULES, POWER SUPPLIES, AND BATTERIES IN QUANTITY AS NEEDED TO SERVE DEVICES SHOWN ON FLOORPLANS.

FA4 EXTEND A 3/4" CONDUIT WITH TWO (2) CAT.6 CABLES TO THE TELEPHONE TERMINAL BOARD.

FA5 EXTEND TWO (2) 1" CONDUITS, ONE FOR COMMUNICATION CABLING AND ONE SPARE.

FA7 EXTEND 3/4" CONDUIT WITH CABLING PER ALL MANUFACTURERS RECOMMENDATIONS.

FA9 EXTEND A 3/4" CONDUIT WITH 2#12 AND 1#12 GND. TO PANEL SHOWN ON PLANS, IDENTIFY BREAKER WITH RED LABEL STATING "FIRE ALARM CIRCUIT".

Babcock Design

Salt Lake City
52 Exchange Place
Salt Lake City, UT 84111
801.531.1144

Boise
800 W Main Street, Suite 940
Boise, ID 83702
208.424.7675

babcockdesign.com

Consultant

ENVISION ENGINEERING
240 E. MORRIS AVE. SUITE 200
SALT LAKE CITY, UT 84115
P (801) 534-1130
www.envisioneng.com
ENV:2025-252

CITY OF ALPINE

ALPINE FIRE STATION

50 E 100 N ALPINE, UT 84004

Revisions

Num.	Description	Date

Project Number	25116
Original Issue	04.16.2026
Project Status	CONSTRUCTION DOCUMENTS

The information and content represented herein is considered by law the architect's instruments of service and are the property of Babcock Design. They are available for limited review and evaluation by clients, consultants, contractors, government agencies, vendors, and office personnel only in accordance with this notice. They are intended for use only for the project specified and are to be used for no other purpose or project including additions to or modification of the completed project. No part thereof may be copied, reproduced, photographed, modified, published, uploaded, transmitted, disclosed, sold, distributed to others in any way including in digital form, or otherwise used without the prior written consent of Babcock Design.

COPYRIGHT © 2025 BABCOCK DESIGN

Stamp

PROFESSIONAL ENGINEER
9808039-2202
ALEKSANDAR RANKOVIC
STATE OF UTAH
04/16/2026

Sheet Title

FIRE ALARM RISER DIAGRAM

Sheet Number

EY701

ACCESS CONTROL SYSTEM RESPONSIBILITY MATRIX

ITEM	FURNISHED BY		INSTALLED AND TESTED BY	
	OWNER	PROJECT CONTRACTOR	OWNER	PROJECT CONTRACTOR
HEAD-END EQUIPMENT (CONTROL PANELS, SWITCHES, ETC.)		X		X
DEVICES (CARD READERS, POWER SUPPLIES, ETC.)		X		X
ALL 4-PAIR HORIZONTAL CABLING		X		X
SPECIALTY CABLING (I.E. MULTI-CONDUCTOR, SHIELDED, ETC.)		X		X
LABELING		X		X
RACEWAY (CONDUIT, BOXES, ETC.)		X		X

ACCESS CONTROL SYSTEM NOTES:

1. CONTRACTOR SHALL PROVIDE ALL REQUIRED RACEWAYS AND CONDUCTORS (CONDUITS, BOXES, WIRES, ETC.) FOR ACCESS CONTROL SYSTEM.
2. CONTRACTOR IS RESPONSIBLE TO COORDINATE ROUGH-IN LOCATIONS FOR EACH INDIVIDUAL DOOR WITH ARCHITECT AND OWNER TO ENSURE ROUGH-IN IS IN CORRECT LOCATIONS AND ON CORRECT SIDE OF DOORS.
3. COORDINATE LOCATIONS OF ALL HARDWARE WITH ARCHITECTURAL PLANS AND DOOR HARDWARE SPECIFICATIONS PRIOR TO ROUGH-IN.
4. SUBMIT ACCESS CONTROL ROUGH-IN SHOP DRAWINGS FOR REVIEW.
5. ALL ABOVE CEILING JUNCTION BOXES SHALL BE FULLY ACCESSIBLE.
6. JUNCTION BOXES IN AREAS WITH OPEN TO STRUCTURE CEILINGS SHALL BE PAINTED AS DIRECTED BY ARCHITECT.
7. ACCESS CONTROL SYSTEM MUST USE DSX SOFTWARE AND HID CARD READERS.
8. CONTRACTOR IS RESPONSIBLE TO ENSURE THIS SYSTEM BEHAVES AS AN EXPANSION OF THE ACCESS CONTROL SYSTEM AT HIGHLAND STATION AND CARD ACCESS CAN WORK BETWEEN BUILDINGS.

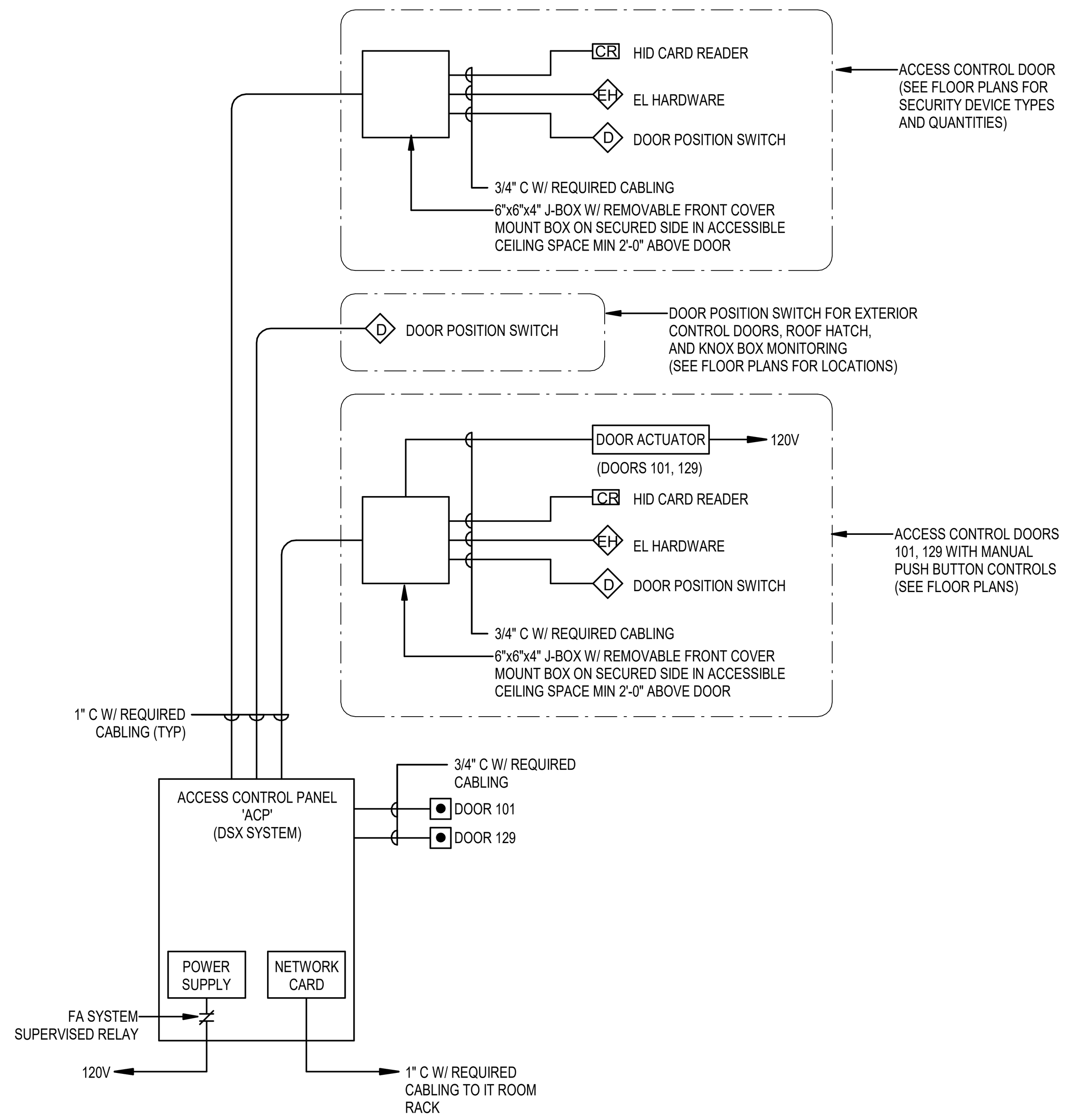

4 ACCESS CONTROL RISER DIAGRAM
12" = 1'-0"

VIDEO SURVEILLANCE SYSTEM RESPONSIBILITY MATRIX

ITEM	FURNISHED BY		INSTALLED AND TESTED BY	
	OWNER	PROJECT CONTRACTOR	OWNER	PROJECT CONTRACTOR
NVR (NETWORK VIDEO RECORDER) SERVER, MONITORS, ETC.		X		X
CAMERAS AND CAMERA MOUNTING		X		X
CAMERA LICENSING		X		X
ALL 4-PAIR HORIZONTAL CABLING		X		X
LABELING		X		X
RACEWAY (CONDUIT, J-BOXES, ETC.)		X		X

VIDEO SURVEILLANCE SYSTEM NOTES:

1. REFER TO SPECIFICATIONS FOR APPROVED VIDEO SURVEILLANCE SYSTEM SOFTWARE AND CAMERA MANUFACTURERS.
2. ALL VIDEO SURVEILLANCE EQUIPMENT, DEVICES, CABLING, PROGRAMMING, ETC. SHALL BE PROVIDED BY CONTRACTOR.
3. THE CONTRACTOR SHALL PROVIDE A COMPLETE RACEWAY SYSTEM FOR AS SHOWN IN THE RISER DIAGRAM.
4. THE CONTRACTOR SHALL TRAIN OWNER'S MAINTENANCE PERSONNEL TO ADJUST, OPERATE, AND MAINTAIN VIDEO SURVEILLANCE SYSTEM AND EQUIPMENT. CONDUCT AT LEAST TWO THREE (3) HOUR TRAINING SESSIONS.
5. CONTRACTOR SHALL SET UP A PRE-CONSTRUCTION MEETING TO COORDINATE CONDUIT LAYOUT WITH VIDEO SURVEILLANCE SYSTEM INSTALLER. SUBMIT CONDUIT LAYOUT PLANS FOR REVIEW.

VIDEO SURVEILLANCE CAMERA SCHEDULE

CAMERA ID	DESCRIPTION	MODEL
C1	EXTERIOR DOME STYLE HDTV 1080p CAMERA OPTIMIZED IR FOR NIGHT PERFORMANCE PoE	AXIS (OR APPROVED EQUAL)

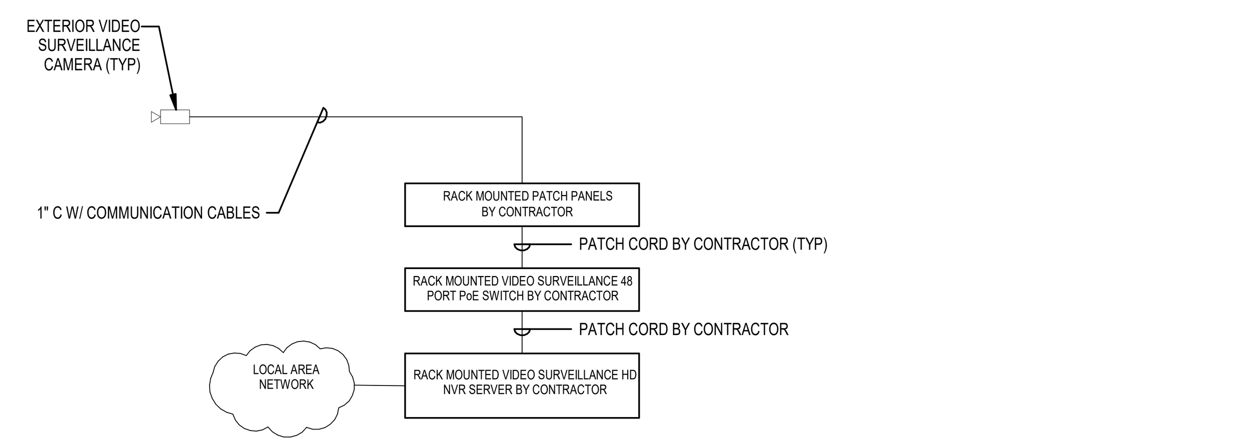

3 VIDEO SURVEILLANCE RISER DIAGRAM AND CAMERA SCHEDULE
12" = 1'-0"

TELECOMMUNICATIONS RESPONSIBILITY MATRIX

ITEM	FURNISHED BY		INSTALLED AND TESTED BY	
	OWNER	PROJECT CONTRACTOR	OWNER	PROJECT CONTRACTOR
WIRELESS ACCESS POINTS	X			X
SERVERS, SWITCHES, ACTIVE EQUIPMENT	X			X
RACK MOUNTED UPS	X			X
RACK PDUS (POWER DISTRIBUTION UNITS)		X		X
RACKS AND VERTICAL/HORIZONTAL RACK CABLE MANAGEMENT		X		X
TELECOM RACKS OR CABINETS		X		X
PATCH CORDS		X		X
FACEPLATES, JACKS, CABLING, ETC.		X		X
PATCH PANELS		X		X
ALL 4-PAIR HORIZONTAL CABLING		X		X
FIBER AND FIBER ACCESSORIES		X		X
LABELING		X		X
BUILDING ENTRANCE PROTECTORS (SURGE SUPPRESSION DEVICES)		X		X
RACEWAY (CONDUITS, BOXES, J-HOOKS, ETC.)		X		X
GROUNDING AND BONDING (BUS BARS, WIRE, ETC.)		X		X

CONDUIT SIZING SCHEDULE

TRADE SIZE INCHES	TOTAL AREA 100%	TOTAL INTERNAL DIAMETER (IN.)	CABLE OUTSIDE DIAMETER (INCHES) AND MAXIMUM CABLES PER CONDUIT								
			0.13	0.18	0.22	0.24	0.29	0.31	0.37	0.53	0.62
1"	0.864	1.049	18	10	6	5	4	3	2	1	1
1-1/4"	1.496	1.38	32	16	11	9	6	6	4	2	1
1-1/2"	2.036	1.61	43	22	15	13	9	8	5	3	2
2"	6.356	2.067	71	37	25	21	14	12	9	4	3
2-1/2"	5.858	2.731	124	64	43	36	25	22	15	7	5
3"	8.846	3.356	187	97	65	55	37	33	23	11	8
3-1/2"	11.545	3.834	244	127	85	71	49	43	30	15	11
4"	14.753	4.334	311	162	109	91	63	55	38	19	14

1. CHART IS BASED UPON ELECTRICAL METALLIC TUBING (EMT).
2. 1" CONDUIT IS THE MINIMUM SIZE ACCEPTABLE ON THIS PROJECT.
3. PROVIDE FOR 50% FUTURE CAPACITY IN EACH CONDUIT.
4. NO MORE THAN THREE DATA OUTLETS SHALL BE FED FROM A SINGLE CONDUIT RUN. PROVIDE SEPRATE CONDUIT FOR MORE THAN THREE.
5. THIS TABLE ASSUMES A FILL FACTOR OF 40% AND A MAXIMUM OF (2) 90 DEGREE BENDS BETWEEN PULL POINTS.

COMMUNICATION CABLING SCHEDULE

DEVICE	ANSI/TIA CATEGORY	# OF CABLES PER OUTLET	JACKET COLOR	JACK COLOR	CABLE TYPE	CABLE RATING
DATA OUTLETS	CAT 6A	2	BLUE	BLUE	U/UTP	PLENUM
WIRELESS ACCESS POINTS	CAT 6A	1	BLUE	BLUE	U/UTP	PLENUM
VIDEO SURVEILLANCE CAMERAS	CAT 6A	1	YELLOW	YELLOW	U/UTP	PLENUM
A/V EQUIPMENT AND TVs	CAT 6A	1	WHITE	WHITE	U/UTP	PLENUM

MAIN ELECTRICAL ROOM

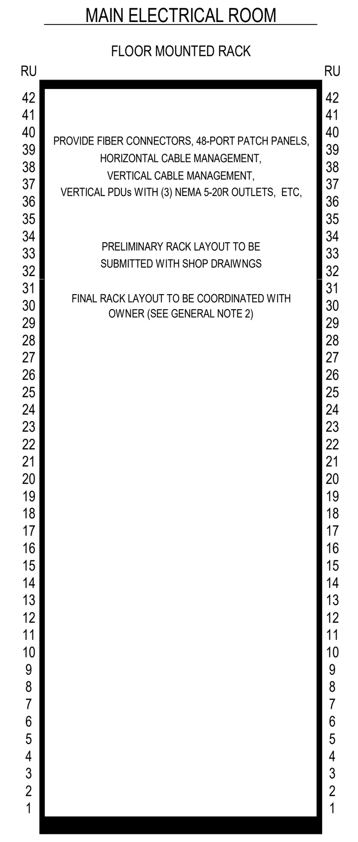

TELECOM RACK GENERAL NOTES

1. ALL EQUIPMENT / CABINETS / CABLING / WIRE MANAGEMENT / ETC. BY CONTRACTOR - SEE TELECOM COORDINATION MATRIX.
2. CONTRACTOR SHALL SET UP A PRE-CONSTRUCTION MEETING TO COORDINATE RACK EQUIPMENT LAYOUTS WITH OWNER AND ENGINEER OF RECORD.
3. CONTRACTOR SHALL COORDINATE ALL DATA/COMM REQUIREMENTS AND WORK WITH OWNER PRIOR TO ROUGH-IN OR PULLING ANY CABLING.
4. CONTRACTOR SHALL PROVIDE ALL PATCH PANELS, RACKS, FACEPLATES, JACKS, CABLES, AND ALL CABLE TERMINATIONS AS REQUIRED FOR A COMPLETE INSTALLATION.
5. ALL DATA AND COMMUNICATION CABLES SHALL BE TERMINATED AND LABELED AT BOTH ENDS. PROVIDE LABELING AS DIRECTED BY OWNER.
6. CONTRACTOR IS RESPONSIBLE FOR TESTING ALL DATA/COMM AND FIBER CONNECTIONS TO ENSURE BICSI AND EIA/TIA STANDARDS ARE MET. PROVIDE A WRITTEN REPORT TO OWNER FOR EACH CABLE TESTED. REFER TO SPECIFICATIONS FOR REQUIREMENTS.
7. INSTALL CABLING IN RACEWAYS AS SHOWN ON DRAWINGS, EXCEPT WITHIN CONSOLES, CABINETS, DESK, AND COUNTERS AND ACCESSIBLE CEILING SPACES. INSTALL EXPOSED CABLES PARALLEL AND PERPENDICULAR TO SURFACES OR EXPOSED STRUCTURAL MEMBERS, AND FOLLOW SURFACE CONTOURS.
8. DATA/COMM SYSTEM SUPPLIER SHALL PROVIDE COMPUTER DRAFTED SHOP DRAWINGS OF ENTIRE DATA SYSTEM USING FLOOR PLANS PROVIDED BY THE ENGINEER. SHOP DRAWINGS TO INCLUDE PLANS, SECTIONS, ELEVATIONS, FINAL DEVICE LOCATIONS, CONDUIT SIZE AND ROUTING, AND ALL CABLE TYPES. TYPICAL RISERS WILL NOT BE ACCEPTED.

2 TELECOM RACK LAYOUT
12" = 1'-0"

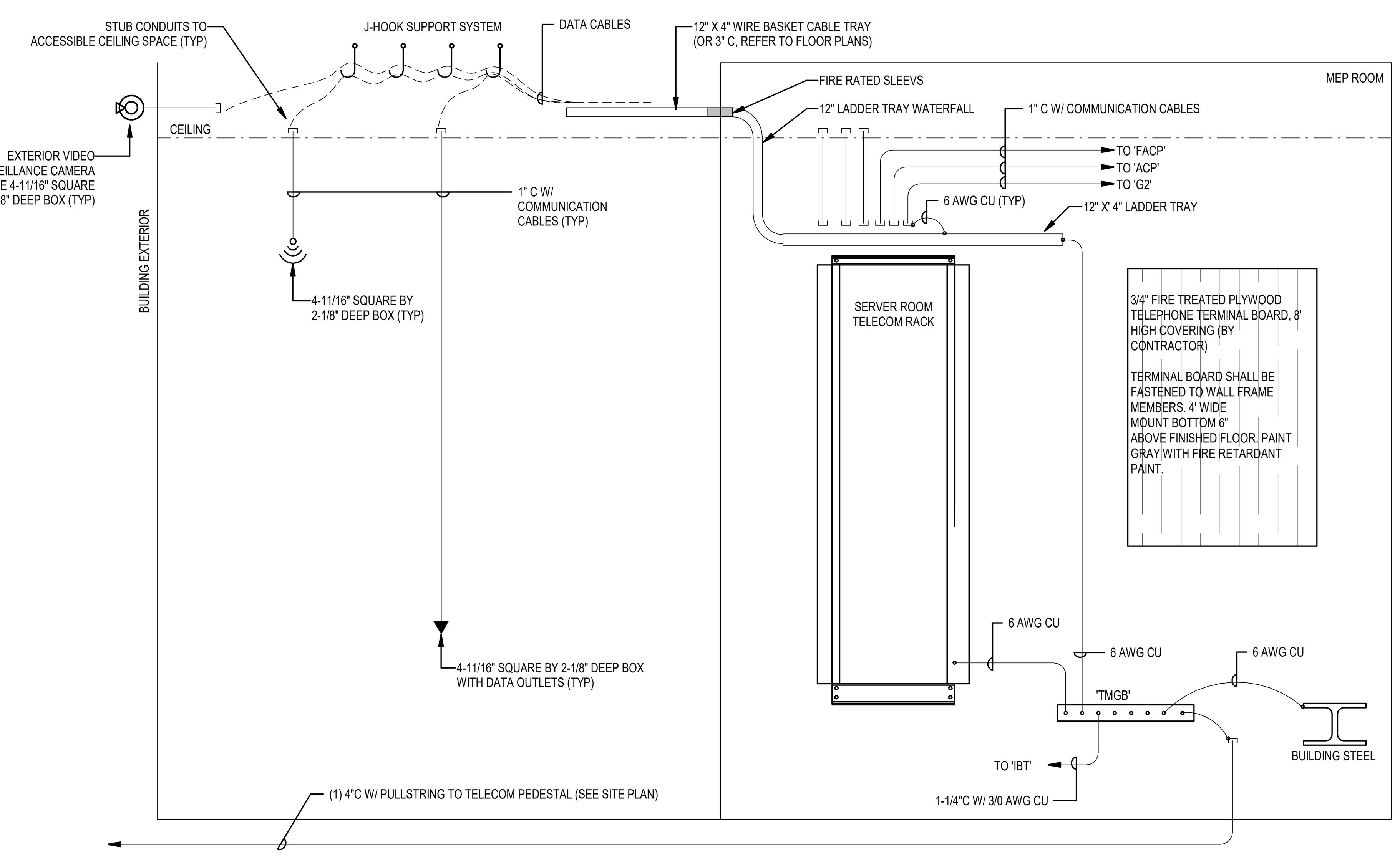

TELECOMMUNICATIONS GENERAL NOTES AND GUIDELINES:

GENERAL

1. ALL PATHWAYS MUST NOT EXCEED 295' FROM THE TELECOM RACK TO THE DATA OUTLET.
2. ALL PENETRATIONS THROUGH FIRE RATED WALL SHALL BE PROVIDED WITH FIRE RATED PATHWAYS, PUTTY PADS AND FIRE CAULKING SUCH THAT THE WALL RAITING IS MAINTAINED. SEE SPECIFICATIONS FOR ADDITIONAL REQUIREMENTS.

ACCEPTABLE CONDUIT RUNS

1. MUST NOT HAVE A BEND OVER 90 DEGREES OR AN AGGREGATE OF BENDS IN EXCESS OF 180 DEGREES BETWEEN PULL POINTS.
2. CONDUIT SEGMENTS SHALL NOT EXCEED 100' WITHOUT A PULL POINT.
3. ALL CONDUITS SHALL BE EQUIPPED WITH A PULL CORD THAT HAS A MINIMUM RATING OF 200LBS.
4. CONDUIT SHALL BE SIZED PER ANSI/TIA/EIA 569-B, WITH A MINIMUM SIZE OF 1".
5. JUNCTION BOXES ARE ALLOWED IN ACCESSIBLE LOCATIONS ONLY.
6. FLEXIBLE METALLIC AND FLEXIBLE NONMETALLIC CONDUIT ARE PROHIBITED.

PATHWAYS AND CABLE SUPPORT

1. PATHWAYS MUST HAVE ADEQUATE SUPPORT TO WITHSTAND PULLING THE CABLES.
2. PATHWAYS SHOULD BE INSTALLED AT LEAST 3" OF CLEAR VERTICAL SPACE ABOVE THE CEILING TILES AND T-BARS TO ENSURE ACCESSIBILITY, AND SHOULD AT NO POINT REST OR BE SUPPORTED BY ANY COMPONENT OF THE SUSPENDED CEILING.

GROUNDING AND BONDING

1. PROVIDE 6 AWG CU MINIMUM BONDING JUMPER TO ALL CONDUITS, RACKS, CABINETS, AND OTHER RACEWAY AND EQUIPMENT AS REQUIRED PER EIA/TIA STANDARDS.

1 TELECOM RIDER DIAGRAM
12" = 1'-0"

Babcock Design

Salt Lake City
52 Exchange Place
Salt Lake City, UT 84111
801.531.1144

Boise
800 W Main Street, Suite 940
Boise, ID 83702
208.424.7675

babcockdesign.com

Consultant

ENVISION ENGINEERING
240 E. MORRIS AVE. SUITE 200
SALT LAKE CITY, UT 84115
P (801) 534-1130
www.envisioneng.com
ENV:2025-252

CITY OF ALPINE

ALPINE FIRE STATION

50 E 100 N ALPINE, UT 84004

Revisions

Num.	Description	Date

Project Number	25116
Original Issue	04.16.2026
Project Status	CONSTRUCTION DOCUMENTS

The information and content represented herein is considered by law the architect's instruments of service and are the property of Babcock Design. They are available for limited review and evaluation by clients, consultants, contractors, government agencies, vendors, and office personnel only in accordance with this notice. They are intended for use only for the project specified and are to be used for no other purpose or project including additions to or modification of the completed project. No part thereof may be copied, reproduced, photographed, modified, published, uploaded, transmitted, disclosed, sold, distributed to others in any way including in digital form, or otherwise used without the prior written consent of Babcock Design.

COPYRIGHT © 2025 BABCOCK DESIGN

Stamp

PROFESSIONAL ENGINEER
9808039-2202
ALEKSANDAR RANKOVIC
STATE OF UTAH
04/16/2026

Sheet Title

SYSTEMS RISER DIAGRAMS

Sheet Number

EY702

Current as of: 4/16/2026 2:18:33 PM
Original drawing is 30" x 42" Autodesk Docs://25116 - ALPINE FIRE STATION 202/2025-269-ELEC_CENTRAL_V25.rvt

1 LEVEL 1 - AUDIOVISUAL RCP
1/8" = 1'-0"

2 LEVEL 1 - AUDIOVISUAL FLOOR PLAN
1/8" = 1'-0"

AUDIO VISUAL GENERAL NOTES:

1. NO CHANGES SHALL BE MADE WITHOUT THE AV CONSULTANT'S WRITTEN CONSENT.
2. TO MINIMIZE SIGNAL CROSS TALK, GROUP CABLES ACCORDING TO SIGNALS BEING CARRIED. MAINTAIN SEPARATION BETWEEN POWER AND ALL OTHER CABLE GROUPS OF AT LEAST 24", AND 6" BETWEEN ALL OTHER CABLE GROUPS WHEN RUN IN PARALLEL. GROUPS SHALL BE:
   - A. POWER.
   - B. CONTROL.
   - C. VIDEO.
   - D. MIC LEVEL AUDIO CABLES (LESS THAN -20dBM).
   - E. LINE LEVEL AUDIO CABLES (-20dBM TO +20dBM).
   - F. SPEAKER LEVEL CABLES (+20dBM OR GREATER).
   - G. DATA CABLES.
3. PROVIDE #6 AWG THHN WIRE W/ GREEN INSULATION FROM EACH AV EQUIPMENT CABINET TO THE NEAREST MAIN BUILDING GROUND. CONNECT GROUNDING WIRE TO BARE METAL ON EQUIPMENT CABINET.
4. COLORS OF ALL SOUND DEVICES THAT ARE EXPOSED, INCLUDING INPUT AND OUTPUT PLATES, VOLUME CONTROLS, SWITCHES, SPEAKERS, SPEAKER ENCLOSURES, SPEAKER MOUNTING HARDWARE, ETC. SHALL BE REVIEWED AND APPROVED BY OWNER PRIOR TO ORDERING.
5. CABLE ROUTES SHOWN ON DRAWINGS DO NOT ACTUALLY REFLECT THE RACEWAYS. THE RACEWAYS SHALL BE DETERMINED IN THE FIELD.
6. LABEL ALL THE WIRELESS HANDHELD MICROPHONES AND BELT PACKS WITH NAMES OR NUMBERS FOR EASY IDENTIFICATION.
7. REFER TO RISER DIAGRAMS AND EQUIPMENT LISTS FOR THE TYPES AND NUMBERS OF WIRES REQUIRED FOR EACH AV DEVICE.
8. EQUALIZE ALL AUDIO SYSTEMS WITH DSP PRIOR TO SYSTEM COMMISSIONING.
9. ALL CABLES IN PLENUM SPACES SHALL BE PLENUM RATED. WHEN NON-PLENUM CABLE IS SPECIFIED, IN PLENUM SPACES, INTEGRATOR SHALL SUBSTITUTE PLENUM CABLE.

KEYED NOTES (#)

AV1 TO AMPLIFIER BEHIND DISPLAY. SEE SHEET EA601.

Babcock Design

Salt Lake City
52 Exchange Place
Salt Lake City, UT 84111
801.531.1144

Boise
800 W Main Street, Suite 940
Boise, ID 83702
208.424.7675

babcock**design**.com

Consultant

ENVISION ENGINEERING
240 E. MORRIS AVE. SUITE 200
SALT LAKE CITY, UT 84115
P (801) 534-1130

www.envisioneng.com
ENV:2025-252

CITY OF ALPINE

ALPINE FIRE STATION

50 E 100 N ALPINE, UT 84004

Revisions

Num.	Description	Date

Project Number	25116
Original Issue	04.16.2026
Project Status	CONSTRUCTION DOCUMENTS

The information and content represented herein is considered by law the architect's instruments of service and are the property of Babcock Design. They are available for limited review and evaluation by clients, contractors, and public officials in connection with projects designed by Babcock Design. By accepting this notice, they are intended for use only for the project specified and are to be used for no other purpose or project including additions to or modification of the completed project. No part thereof may be copied, reproduced, photographed, modified, published, uploaded, transmitted, disclosed, sold, distributed to others in any way including in digital form, or otherwise used without the prior written consent of Babcock Design.

COPYRIGHT © 2025 BABCOCK DESIGN

Stamp

PROFESSIONAL ENGINEER
9008039-2202
ALEKSANDAR RANKOVIC
STATE OF UTAH
04/16/2026

Sheet Title

AUDIO VISUAL

Sheet Number

EA101

Current as of: 4/16/2026 2:18:28 PM

Original drawing is 30" x 42". Autodesk Docs://25116 - ALPINE FIRE STATION 2026/2025-269-ELEC_CENTRAL_V25.rvt

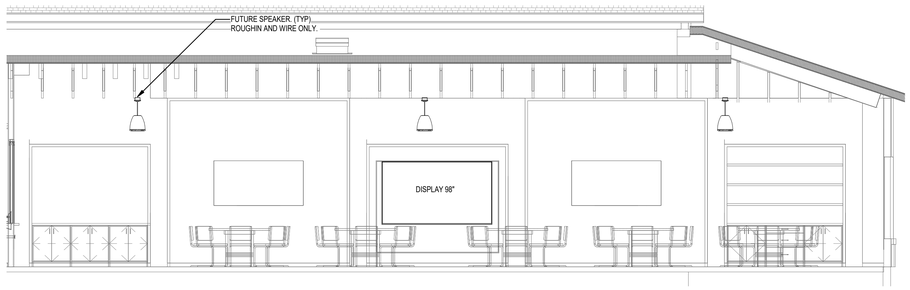

1 **COMMUNITY CENTER DISPLAY AND ELEVATION**
SCALE: **1/4" = 1'-0"**

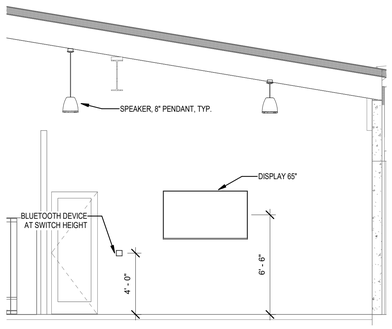

2 **GYM DISPLAY, BT, AND SPEAKER ELEVATION**
SCALE: **1/4" = 1'-0"**

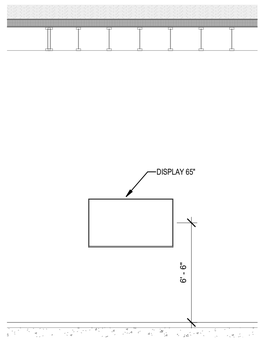

3 **GYM DISPLAY ELEVATION**
SCALE: **1/4" = 1'-0"**

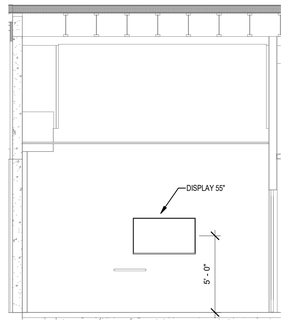

4 **CAPTAIN'S OFFICE DISPLAY ELEVATION**
SCALE: **1/4" = 1'-0"**

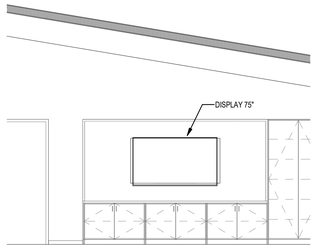

5 **DAY ROOM DISPLAY ELEVATION**
SCALE: **1/4" = 1'-0"**

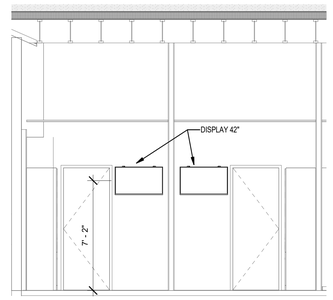

6 **DORM ROOM DISPLAY ELEVATIONS, TYP.**
SCALE: **1/4" = 1'-0"**

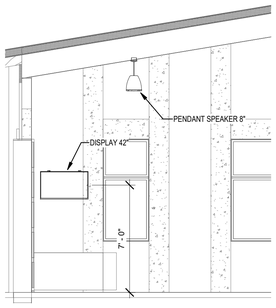

7 **GYM SMALL DISPLAY AV SECTION**
SCALE: **1/4" = 1'-0"**

Original drawing is 30" x 42" Autodesk Docs://25116 - ALPINE FIRE STATION 202/2025-269-ELEC_CENTRAL_V25.rvt

Current as of: 4/15/2026 2:18:39 PM

Babcock Design

Salt Lake City
52 Exchange Place
Salt Lake City, UT 84111
801.531.1144

Boise
800 W Main Street, Suite 940
Boise, ID 83702
208.424.7675

babcock**design**.com

Consultant

ENVISION ENGINEERING
240 E. MORRIS AVE. SUITE 200
SALT LAKE CITY, UT 84115
P (801) 534-1130

www.envisioneng.com
ENV:2025-252

CITY OF ALPINE

ALPINE FIRE STATION

50 E 100 N ALPINE, UT 84004

Revisions

Num.	Description	Date

Project Number	25116
Original Issue	04.16.2026
Project Status	CONSTRUCTION DOCUMENTS

The information and content represented herein is considered by law the architect's instruments of service and are the property of Babcock Design. They are available for limited review and evaluation by clients, consultants, contractors, government agencies, vendors, and office personnel only in accordance with this intent. They shall not be used by any party for other projects, additions to this project, or future projects or project including additions to or modification of the completed project. No part thereof may be copied, reproduced, photographed, modified, published, uploaded, transmitted, disclosed, sold, distributed to others in any way including in digital form, or otherwise used without the prior written consent of Babcock Design.

COPYRIGHT © 2025 BABCOCK DESIGN

Stamp

PROFESSIONAL ENGINEER
9808039-2202
ALEKSANDAR RANKOVIC
STATE OF UTAH
04/16/2026

Sheet Title

AUDIO VISUAL ELEVATIONS

Sheet Number

EA401

AUDIO VIDEO - GYM 114 - EQUIPMENT LIST

SYMBOL	DESCRIPTION	QTY/RM	SUPPLIER	MODEL	ROUGH-IN	AV CABLE
DISPLAY65	DISPLAY 65" - MOUNT - BACKBOX -	OFP 1/DISPLAY 1/DISPLAY	LG (OFCI) CHIEF CHIEF	LG - LTM1U - PAC525FCW	- 3/4" C TO SPEAKERS 3/4" C TO ACC. CEILING	
DISP42	DISPLAY 42" - MOUNT - BACKBOX -	OFP 1/DISPLAY 1/DISPLAY	LG (OFCI) CHIEF CHIEF	LG - MTM1U - PAC525FCW	- 3/4" C TO SPEAKERS 3/4" C TO ACC. CEILING	
APPLE TV	APPLE TV	1/DISPLAY	APPLE (OFCI)	APPLE TV	INSTALL IN DISPLAY BACK BOX	HDMI PATCH CABLE PRE-MADE DATA PATCH CABLE, CAT6
AMP	AMPLIFER -	OFP	JBL	CSA 1120Z -	MOUNT BEHIND DISPLAY	WEST PENN 25225B
BT	BLUETOOTH TWISTED PAIR TRANSMITTER	OFP	RDL	D-BT1A	4-11/16" BOX, W/ 1 GANG MUD RING 3/4" C TO DISPLAY BACK BOX	WEST PENN 254346A
TPRX	TWISTED PAIR AUDIO RECEIVER - POWER SUPPLY -	OFP 1/EA	RDL RDL	TX-TPR2A PS-24AS	INSTALL IN DISPLAY BACK BOX	WEST PENN 254346A
16W	PENDANT SPEAKER -	OFP	SOUNDTUBE	HP82-EZ-BK COORDINATE COLOR WITH ARCHITECT		WEST PENN 25225B

OFP = OBTAIN FROM PLANS; OFCI = OWNER FURNISHED CONTRACTOR INSTALLED; A/R = AS REQUIRED; NR = NO REQUIREMENT

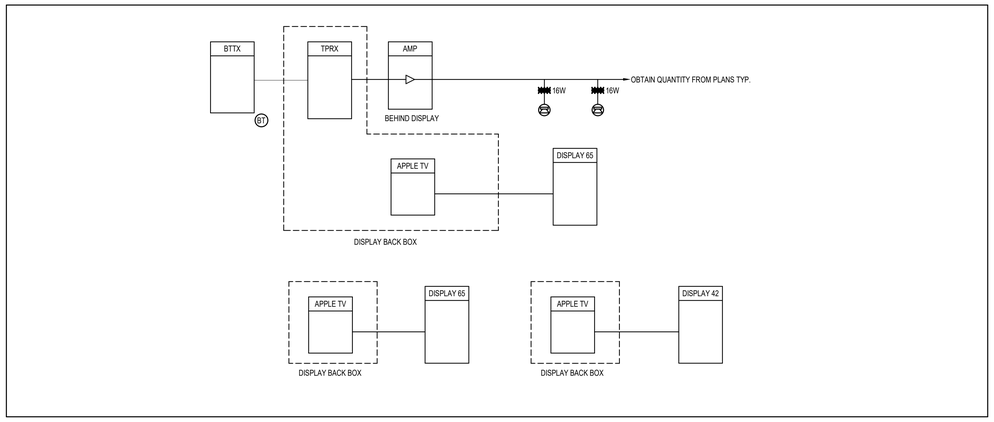

1 **GYM 114 - AV RISER DIAGRAM**
SCALE: NTS

AUDIO VIDEO - DISPLAYS (DORM, OFFICE, DAYROOM) - EQUIPMENT LIST

SYMBOL	DESCRIPTION	QTY/RM	SUPPLIER	MODEL	ROUGH-IN	AV CABLE
DISP42 DISPLAY55 DISPLAY75	DISPLAY 42", 55", 75" - MOUNT -	OFP 1/DISPLAY	LG CHIEF	OFCI ASSLD (OFCI) MTM1U, FOR 42" DISPLAYS ONLY (OFCI)		
APPLE TV	APPLE TV	1/DISPLAY	APPLE	OFCI	MOUNT BEHIND DISPLAY	HDMI PATCH CABLE PRE-MADE DATA PATCH CABLE, CAT6

OFP = OBTAIN FROM PLANS; OFCI = OWNER FURNISHED CONTRACTOR INSTALLED; A/R = AS REQUIRED; NR = NO REQUIREMENT

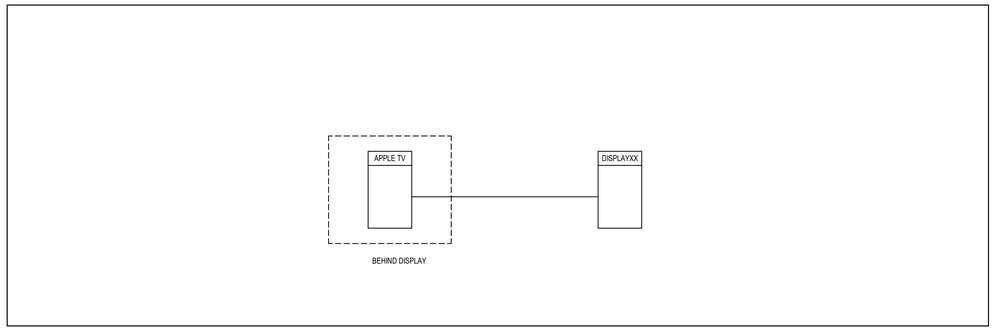

2 **DISPLAYS (DORM, OFFICE, DAYROOM) - AV RISER DIAGRAM**
SCALE: NTS

AUDIO VIDEO - COMMUNITY CENTER - EQUIPMENT LIST

SYMBOL	DESCRIPTION	QTY/RM	SUPPLIER	MODEL	ROUGH-IN	AV CABLE
DISPLAY98	DISPLAY 98", - WALL MOUNT, PULL OUT -	OFP	LG CHIEF	OFCI XPA1U (OFCI)		
APPLE TV	APPLE TV	1/DISPLAY	APPLE	OFCI	INSTALL BEHIND DISPLAY	HDMI PATCH CABLE PRE-MADE DATA PATCH CABLE, CAT6

OFP = OBTAIN FROM PLANS; OFCI = OWNER FURNISHED CONTRACTOR INSTALLED; A/R = AS REQUIRED; NR = NO REQUIREMENT

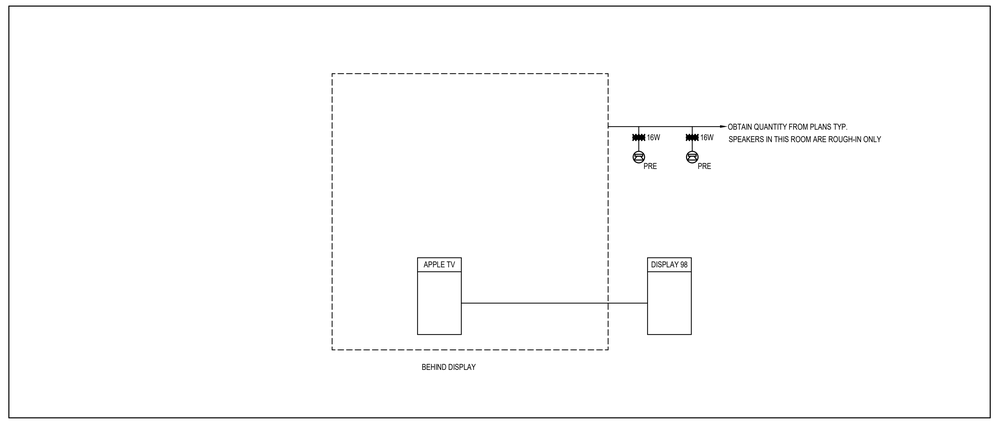

3 **COMMUNITY CENTER - AV RISER DIAGRAM**
SCALE: NTS

Babcock Design

Salt Lake City
52 Exchange Place
Salt Lake City, UT 84111
801.531.1144

Boise
800 W Main Street, Suite 940
Boise, ID 83702
208.424.7675

babcock**design**.com

Consultant

ENVISION ENGINEERING
240 E. MORRIS AVE. SUITE 200
SALT LAKE CITY, UT 84115
P (801) 534-1130

www.envisioneng.com
ENV:2025-252

CITY OF ALPINE

ALPINE FIRE STATION

50 E 100 N ALPINE, UT 84004

Revisions

Num.	Description	Date

Project Number	25116
Original Issue	04.16.2026
Project Status	CONSTRUCTION DOCUMENTS

The information and content represented herein is considered by law the architect's instruments of service and shall remain the property of Babcock Design. They are not to be changed or copied in any form or manner whatsoever by consultants, contractors, government agencies, workers, and office personnel only in accordance with this notice. They are intended for use only for the project specified and are to be used for no other purpose or project including additions to or modification of the completed project. No part thereof may be copied, reproduced, photographed, modified, published, uploaded, transmitted, disclosed, sold, distributed to others in any way including in digital form, or otherwise used without the prior written consent of Babcock Design.

COPYRIGHT © 2025 BABCOCK DESIGN

Stamp

PROFESSIONAL ENGINEER
9806039-2202
ALEKSANDAR RANKOVIC
STATE OF UTAH
04/16/2026

Sheet Title

AUDIO VISUALRISERS & EQUIP LISTS

Sheet Number

EA601

Current as of: 4/16/2026 7:18:31 PM
Original drawing is 30" x 42". Autodesk Docs://25116 - ALPINE FIRE STATION 2022/2025-269-ELEC_CENTRAL_V25.rvt

ALPINE CITY PLANNING COMMISSION MEETING
Alpine City Hall, 20 North Main, Alpine, UT
March 3, 2026

I. GENERAL BUSINESS

A. Welcome and Roll Call: The meeting was called to order at 6:00 p.m. by Chair Alan Macdonald. The following were present and constituted a quorum:

Chair: Alan Macdonald
Commission Members: Michelle Schirmer, John MacKay, Greg Butterfield, Troy Slade, Susan Whittenburg
Excused: Jeff Davis
Staff: Ryan Robinson, Marla Fox, Jason Judd, Heidi Smith

B. Prayer/Opening Comments: John MacKay
C. Pledge of Allegiance: Troy Slade

II. REPORTS AND PRESENTATIONS

None

III. ACTION ITEMS

A. Proposed Modification of the Conditional Use Permit for the Friends of the Alpine Library

Ryan Robinson said on November 18, 2025, the Planning Commission approved a Conditional Use Permit for a quasi-public library located at 491 S. Alpine Highway. The following conditions were imposed to mitigate potential detrimental impacts and ensure compliance with applicable City standards.

Approved Motion: Planning Commission Member John MacKay moved to approve the Conditional Use Permit for the Friends of the Alpine Library, located at 491 S. Alpine Highway, subject to the following conditions to mitigate anticipated impacts and ensure compliance with Alpine Development Code Section 3.23:

1. Hours of operation shall be limited to 10:00 a.m. – 5:00 p.m., Monday through Thursday, and 10:00 a.m. – 3:00 p.m. on Friday, with no operation on weekends during the Burgess Orchards produce stand season. When the orchard is closed, hours may be extended to 10:00 a.m. – 5:00 p.m., Monday through Saturday.
2. A minimum of fourteen (14) parking spaces shall be dedicated exclusively for library patrons during operating hours, with appropriate signage installed. If required parking is not available, operations shall cease until parking becomes available.
3. Non-library events shall be limited to no more than fourteen (14) attendees and must occur during regular operating hours.
4. Fundraising activities shall not occur in the parking lot.
5. ADA-compliant access, entrances, and parking shall be provided prior to occupancy. ADA-compliant restrooms shall be installed within twelve (12) months of opening.
6. The applicant shall coordinate with City staff to evaluate Alpine Highway access for safety and consider a one-way entrance configuration if determined necessary.

DRAFT

During discussion, Commissioner Michelle Schirmer asked whether retail sales within the library would be permitted. Commissioner Greg Butterfield indicated that limited incidental sales, such as artwork or similar items, would not create significant concern.

Commissioner Jeff Davis seconded the motion. The motion passed with five (5) votes in favor and one (1) opposed. The Friends of Alpine Library are now requesting amendments to the approved conditions (see attached materials).

Ryan Robinson said he spoke with Jen Wadsworth, and she wanted to make some changes because she believes what was recorded was not what was approved by the Planning Commission. They are proposing a clerical cleanup on this and have changes to condition.

Ryan Robinson said for Condition #2, which is the parking spaces, the change is instead of it saying *fourteen parking spaces shall be dedicated to library patrons only*, it should say *parking is available for library patrons during the hours of operation*. Remove the part about appropriate signage installed. *If parking is not available, the applicant shall discontinue hours of operation.*

Ryan Robinson said as staff we didn't see any issue with that because if there' not enough parking spots, the library's got to close. He said on #3 the other change there is that the applicant will *regrade the entrance of the Alpine Highway to mitigate unsafe ingress and egress and entrance from Main Street*. He said if there is snow, it would be a slick entrance going out, so we recommended regrading that so it's an easier exit and entrance going in and out. Even without snow, it's hard to get in and out of.

Ryan Robinson said there was also ADA compliance stuff that they were working on. The original language said prior to occupancy or prior to them being open full time. The language said the ADA compliance shall be made available within 12 months of opening. He said we would go from the November 18th, 2025, approval date, so by next November they would need to have that cleaned up.

Ryan Robinson said they removed item #6 which is the ingress and egress from Alpine Highway which we covered in item #3. He said going back to #3 Where is says non library events shall be limited to no more than 14 attendees and held during regular operating hours; he said we may have removed that, but his recollection was that we still required that 14 limit to get in and out.

Alan Macdonald said under the background information there are six conditions listed and he said his recollection was that those were the six conditions that were drawn up during that Planning Commission meeting and voted on by the commissioners. He asked if these six items were not what we actually voted on and discussed. He said he did not understand and asked if the motion was not written correctly.

Ryan Robinson said he thought this was an amendment to their original conditional use permit. In speaking with Jen Wadsworth, she thought that what was recorded as the conditions was not accurate as to what was on there. He said they would like to make these changes to the conditional use permit to the conditions they thought were approved that night.

Alan Macdonald asked if the applicant could discuss that. He said he recalls, for example #2, we wanted to make sure and there was an intent that there would be a minimum of 14 parking spaces dedicated for library patrons during hours of operation with appropriate signage so that the parking lot being used overflow for Burgess Orchards, there would nevertheless be parking spaces for children, parents, and families to utilize the library. He said a change to #2 would do away with those dedicated parking spaces. He said this is an amendment and didn't think it was correcting a mistake.

DRAFT

Alan Macdonald said he does recall, for example #3, one of the things that was important to the Commission was that non library operating events shall be limited to no more than 14 attendees and held during regular operating hours. He said he thought that was in there intentionally and didn't believe taking those things out is making this accurate to what was discussed and voted on that night. He said this seems more like changes and an amendment than cleaning up what was voted on.

John MacKay said he remembers that we agreed that we shouldn't have exclusive parking signs for the 14 slot parking spaces. He said he liked the idea of having them open and said that was an error the way it was captured. He said he didn't remember talking about the limitation on 14 attendees, but said we said they couldn't have fundraisers. Ryan Robinson agreed and said fundraisers couldn't be in the parking lot. Susan Whittenburg said probably the 14 was because we said 14 people could park there. John MacKay said he didn't believe we put a requirement of a minimum of 14 spaces that are dedicated.

Greg Butterfield said he recalled a fairly lengthy conversation about limiting fundraising or having events outside, not just in the parking lot but also on the property. He said he thought there was something proposed relative to trying to make sure, especially during peak hours during the summer, that there was some limitation. He said it may not have been 14 spaces specifically, but there was a good dialogue that was part of the resolution. He said this was limiting fundraisers and large groups gathered at the library at the same time people could be over at the fruit stand. He said this he didn't know that this accurately represents that dialogue.

Alan Macdonald said he didn't know if this was an amendment or a cleanup of the language. Either way, we need to discuss it and make a motion. Jennifer Wadsworth, applicant, said she believes this is a misunderstanding and some of the language is incorrect according to John Mackay's verbal motion he made that night and the one the Planning commission voted on.

we asked them to re-grade the parking and we still require fourteen parking spaces but the Planning Commission wasn't sure about discussing signage. He said by next November, they would need to have all their ADA compliance items done.

Alan Macdonald asked why we are changing the motion, when this is what was discussed and voted upon. He said this isn't a misunderstanding of what was discussed. Greg Butterfield agreed and said he remembers limiting events in the parking lot and discussing parking.

Ryan Robinson said we should view this as an amendment to the original motion. Jennifer Wadsworth, applicant, said the language in the motion is incorrect. She said the language she is asking to amend is word for word from the motion. She said she could see how this happened because sometimes the conversation gets diluted into the actual motion. She said the motion that John Mackay made was very clear and some language was not part of the motion.

Troy Slade said he remembers having a discussion about having dedicated parking spaces and labeling them as library parking, but then we thought if they are dedicated to the library and the fruit stand needs them that wouldn't make sense. John Mackay said Jen Wadsworth had read the minutes and found these errors and said he was going to rely on her expertise.

MOTION: Planning Commission member John MacKay moved to approve the amendment to the Conditional Use Permit for the Friends of the Alpine Library located at 491 S Alpine Highway based on the findings that the proposed amendment continues to comply with the Alpine Development Code Section 3.23. subject to the following changes:

Changes to the language include:

1. *Hours of operation shall be limited to 10:00 a.m. – 5:00 p.m. Monday through Thursday, and 10:00 a.m.-3:00 p.m. on Friday, with no operation on Saturdays during the Burgess orchards produce stand season. When the orchard is closed, hours shall be extended to 10:00 a.m.-5:00 p.m. Monday through Saturday.*
2. *A minimum of 14 parking spaces shall be available for library patrons during hours of operation. Should a conflict of interest arise where adequate parking is not available, the applicant shall discontinue hours of operation.*
3. *The applicant shall regrade the entrance on Alpine Highway to mitigate unsafe egress and entrance from Main Street.*
4. *No fundraiser or fairs activities may occur in the parking lot.*
5. *ADA-compliant parking shall be provided prior to occupancy. ADA access and restrooms shall be created within 12 months of opening. (Starting from November 18, 2025).*

The Planning Commission pulled up the November 18, 2025, Planning Commission meeting and listened to the motion.

Michelle Schirmer asked if we needed to put a time limit on #3. Alan MacDonald said he didn't think we could because that was not the purpose of this item, he said we are just cleaning up the motion, not modifying it.

Troy Slade seconded the motion. There were 6 Ayes and 0 Nays (recorded below). The motion passed.

Ayes:	**Nays:**	**Excused:**
Michelle Schirmer		Jeff Davis
John MacKay		
Greg Butterfield		
Troy Slade		
Alan Macdonald		
Susan Whittenburg		

Excerpt of DRAFT Minutes from the March 3, 2026 Planning Commission Meeting (updated from November 18, 2025, Planning Commission Meeting)

Motion:
John MacKay moved to approve the Conditional Use Permit for the Friends of Alpine Library located at 491 S Alpine Highway.

The following conditions were imposed to mitigate anticipated impacts and ensure compliance with Alpine Development Code Section 3.23

1. Hours of operation shall be limited to 10:00 a.m. – 5:00 p.m. Monday through Thursday, and 10:00 a.m.-3:00 p.m. on Friday, with no operations, no openings on Saturdays while the Burgess Orchards produce stand is open. During the period where the Burgess Orchards produce stand is closed, hours of operation shall have the ability to be open 10:00 a.m.-5:00 p.m. Monday through Saturday.
2. A minimum of 14 parking spaces shall be available for library patrons during their hours of operation. Should a conflict arise where adequate parking is not available, they shall discontinue hours of operation.

3. The applicant shall regrade the entrance on Alpine Highway to mitigate unsafe egress and entrance from Alpine Highway.
4. No fundraiser or fair activities may occur in the parking lot.
5. ADA-compliant parking shall be required before opening. ADA-compliant access and restrooms shall be created within 12 months of opening.

Motion by: John MacKay
Seconded: Jeff Davis (Troy Slade 3/3/2026)

Ayes:	Nays:
Michelle Schirmer	
John MacKay	
Greg Butterfield	
Troy Slade	
Alan Macdonald	
Susan Whittenberg	
Jeff Davis (excused on 3/3/2026)	

Communication from a concerned citizen.
Sherly Degroot, resident on Cascade Ave, asked about the sign that was put up on the corner of Bateman and Alpine Highway. She said it is very far from the entrance of the library and makes it look like the parking lot is designated for the library. She said she is very concerned once that orchard opens, that patrons to the orchard are not going to know that that is orchard parking. She said she thought that sign should be over by the entrance by Alpine Highway and not over on the corner where it is.

Ryan Robinson said the sign meets the sign requirements for a quasi-public use. He said because the sign was not for a commercial business, it didn't need to come to the Planning Commission for approval.

B. Review Commercial Business Sign Application for Alpine Physical Therapy

Ryan Robinson explained that Alpine Physical Therapy has submitted an application for a commercial building sign located at 235 S. Main Street. The proposed sign will be installed on the south side of the building and will total 30.48 square feet, occupying less than 15% of the building façade on which it is mounted. The sign is proposed as non-illuminated, individually routed lettering, constructed of ½-inch solid aluminum with a vertical brushed finish and stud-mounted installation.

Staff have reviewed the application and find that, as proposed, it meets the applicable provisions of the Alpine City Code, specifically Alpine Development Code (ADC) Section 3.25.080, which establishes the following standards:

- Signs shall be painted on, attached to, or erected on the building that houses the business or on the property occupied by the business. A maximum of one (1) sign is permitted per business.
- Internally illuminated signs that project light outward through the sign face are prohibited. Signs may include lighting positioned behind the sign to create a halo or outline effect.
- Sign illumination shall not increase ambient lighting conditions by more than 3.3 lumens when measured perpendicular to the sign face at the distance specified in City Code.
- All building-mounted signs must receive City approval to ensure compliance with

applicable building and electrical codes.
- The total area of all signs on any building façade shall not exceed fifteen percent (15%) or sixty (60) square feet of the building side on which the sign is displayed, whichever is less.
- The area of a sign shall be measured as the overall background area. Signs without a background (such as individual letters or numbers) shall be calculated as though attached to a background depicted in the application rendering.
- The color, size, number, lighting, and placement of business signs are subject to Planning Commission approval and must be consistent with the Gateway Historic District Design Guidelines.

The Planning Commission is responsible for reviewing the proposed sign's color, size, number, lighting, and placement to ensure consistency with the Gateway Historic District guidelines and compatibility with the surrounding area.

Greg Butterfield said he noticed a light has been installed that looks like it will be facing upwards toward the sign. He said he didn't see that light on the application plan. Ryan Robinson said we don't have language in the sign ordinance that states you can't have an upward facing light. Alan Macdonald asked about or monument signs and if there was specific language about upward lighting in the Gateway Historic Design Guidelines. Ryan Robinson said it is not in the Gateway Historic Design Guidelines.

Troy Slade said he is concerned that the light hitting the chrome sign might be too bright on Main Street. He asked if the applicants' other sign had the same lighting. Alan Macdonald said we already have an ordinance that states that sign illumination shall not increase ambient lighting conditions by more than 3.3 lumens. So as long as it is not overly bright or overly reflectively bright, any motion we make should state that it needs to comply with all of the standards of the Alpine Development Code Section 3.23.080.

Ryan Robinson said he just looked and we don't have language in the business commercial that says lighting has to be downward facing like we do in the other zones. Jason Judd said in the code under 3.25, there is a sign illumination section of the code. It says that lighted signs are permitted provided the lighting is contained in the immediate vicinity of the sign. There shall be no spillover onto adjacent properties. Lumen shall not create a shadow of greater than 30 feet from the existing sign.

Ryan Robinson said that's for the quasi-public and school signs. He said the applicant would have to meet all the standards found in the sign ordinance if this were to be approved.

The Planning Commission reviewed the Sign Illumination Code and Alan Macdonald said we've gotten hung up on the lighting that is pointing upwards. He said he is not seeing anything in the 3.25 sign ordinance or within the Gateway Historic District Guidelines that would void the application that's before us.

MOTION: Planning Commission member Greg Butterfield moved to approve the Commercial Building Sign Application for Alpine Physical Therapy, located at 235 S Main Street, finding that the proposed sign complies with Alpine Development Code Section 3.25.080 and is consistent with the current Gateway Historic District Design Guidelines.

Susan Whittenburg seconded the motion. There were 6 Ayes and 0 Nays (recorded below). The motion passed.

Ayes:	**Nays:**	**Excused:**
Michelle Schirmer		Jeff Davis
John MacKay		
Greg Butterfield		
Troy Slade		

DRAFT

Alan Macdonald
Susan Whittenburg

Susan Whittenburg said it's getting really bright around this town and said when you drive around, it has changed a lot. She asked what our ordinance was on our lighting as far as sports courts and things like that. Alan Macdonald said we have a lot of ordinances around sport courts and lumens and the times that you can turn them on and spillage. He said regardless, a lot of people have moved in, and they have brought light with them. Susan Whittenburg asked if we have any other restrictions on Main Street. Can businesses keep their signs lit all night? Ryan Robinson said he didn't think we had anything that said they couldn't do that.

Greg Butterfield said this is a subject we could discuss when talking about the Main Street Master Plan and decide if we want to limit Christmas lights, Jelly Lights, to certain hours of operation.

C. Approval of a Conditional Use for a Single-Family Dwelling

Ryan Robinson explained that the Battaglia family is under contract to purchase the property at 1873 N. Fort Canyon Road. Their plan is to demolish the existing home on the property and to reconstruct a new home. Pursuant to Alpine Development Code 3.22.070, a non-conforming building may be reconstructed on a lot subject to prior approval of the City Council, after recommendation from the Planning Commission and compliance with several conditions. The reason for the non-conforming status of the existing home is that it is located on a 1.29-acre property in the CE-5 zone.

Ryan Robinson said the City Attorney reviewed this and it's in the CE-5 zone, there's no minimum lot size there. He said it's not in a PRD or a platted subdivision. He said instead of this being a legal non-conforming, it sounds like it's a legal parcel, but in the CE-5 zone, it says a single-family dwelling is a conditional use in that zone. He said we're not looking at it as a legal non-conforming anymore, we're looking at it as a conditional use in the CE-5 zone. He said the Planning Commission is the land use authority granting a conditional use for a single-family dwelling as per the code.

The conditions outlined in 3.22.070 are as follows:

3.22.070 Extension (Enlargement) And Reconstruction Of Non-Conforming Buildings; Conditions

A non-conforming building or structure or a building housing a non-conforming use may be extended or enlarged or reconstructed, subject to the prior approval by the City Council, after recommendation of the Planning Commission and such compliance with the following:

1. *The proposed extension or replacement shall be located entirely on the same lot or parcel as the present non-conforming structure and will conform with all current setback and location requirements.*
2. *The applicant shall submit a detail site plan showing the location of existing and proposed structures on the site and in the vicinity, existing lot boundaries, roads, driveways, parking areas, utilities and other significant features on the site and in the immediate vicinity.*
3. *A finding made by a majority vote of the Council that:*

    1. *The proposed enlargement or extension will not significantly alter the character of the building or use or its impact upon the area.*

2. *The building or use, if extended, will not have the effect of diminishing the value of property or the quality of living environment of adjacent properties.*
3. *The proposed enlargement will not significantly increase the number of vehicles or pedestrians, or result in the establishment or increase of a safety hazard to the area.*
4. *The proposed enlargement will not result in the establishment of a condition incompatible with the neighborhood area and the stated objective of the zone in which it is located.*

The Council may attach such conditions to its approval as are necessary to adequately protect the property and uses in the surrounding territory and the intent of the zone, including but not limited to, the providing of off-street parking access ways, landscaping features and additional setback of structures.

Porches and external covered stairs shall be permitted within setbacks so long as they do not extend beyond the original setbacks of the non-conforming structure (i.e. the setbacks from the time of the original build), and may be approved at a staff level.

Ryan Robinson said the applicant would like to tear down the old home and build a new one. He said they still have to meet all the building requirements, like setbacks, and height, so you don't have to add conditions as part of the motion.

Mr. Battaglia is in his due diligence time period, so an exact site plan has not been prepared. However, he has provided two possible site plans to illustrate his intentions. The two options include a home that would comply with location and setback requirements. He has also provided a site plan to show the required features in the vicinity of the lot. In making their recommendation to the City Council, the Planning Commission could consider the same list of findings outlined for the City Council in 3.22.070.

Ryan Robinson said in addition, single family dwellings in the CE-5 zone are listed as a conditional use. It appears that since the existing home would be demolished and a new home built, that a conditional use permit would be required. As per Section 3.23.070 of the development code, the Planning Commission is the land use authority for granting a conditional use permit for a single-family dwelling.

As per this section of code, the approval process and items to consider area as follows:

The designated land use authority may approve, approve with conditions, or reject the permit as set forth:

1. *A conditional use shall be approved if reasonable conditions are proposed, or can be imposed, to mitigate the reasonably anticipated detrimental effects of the proposed use in accordance with applicable standards.*
2. *If the reasonably anticipated detrimental effects of a proposed conditional use cannot be substantially mitigated by the proposal or the imposition of reasonable conditions to achieve compliance with applicable standards, the conditional use may be denied.*
3. *With each decision to approve or deny a conditional use permit, the designated land use authority shall include a written explanation of their decision.*

DRAFT

Staff recommend that the Planning Commission consider recommending to the City Council the allowance for reconstruction of a home at 1873 N. Fort Canyon Road. In addition, staff recommend that the Planning Commission, as the land use authority, consider approval of a conditional use permit for a single-family dwelling at the same location.

Alan Macdonald asked what the CE-5 zone was, and why you can only build a home in the CE-5 zone via a conditional use permit. Ryan Robinson said this area is up by the Three Falls area. It is a critical environment zone to protect the hillside with larger lots. He said many of these lots were built before we had this requirement, but any new houses would need to come in and do this as well.

Alan Macdonald asked if there were any conditions that would attach to a conditional use permit to build a single-family home in the CE-5 Acre Zone that we need to think about or be aware of. Ryan Robinson said none that were brought up or that we are concerned about.

Susan Whittenburg asked what the protected lands would have to do with this house. Ryan Robinson said this critical environment area is a hillside area, so we wanted to protect the area by saying if you want to develop up here, you have to have bigger lots. Alan Macdonald said the applicant is doing his due diligence and is replacing one home with another. He said we already have ordinances in place for height and setbacks so he's not seeing an issue.

Jahn Mackay asked if this would be considered a corner lot. Ryan Robinson said it would be considered a corner lot especially where that 1800 North and Fort Canyon meet. John MacKay asked if the applicant was aware of the 30-foot setback from both sides. Ryan Robinson said we would definitely want to make them aware of that. Marla Fox said the applicant is aware. She said she checked the setbacks with Shane Sorensen, and he confirmed they would need a 30-foot setback from both roads and on the rear side as well.

Jason Judd said we need to look at the utility requirements for culinary and firefighting purposes with the pressure not less than 40 psi. Ryan Robinson agreed and said the applicant would have to meet all the utility requirements.

MOTION: Planning Commission member Troy Slade moved to approve the construction of a single-family dwelling at 1873 N Fort Canyon Road subject to the following condition:

1. Subject to existing ordinances, engineering, and utility requirements.

Michelle Schirmer seconded the motion. There were 6 Ayes and 0 Nays (recorded below). The motion passed.

Ayes:	**Nays:**	**Excused:**
Michelle Schirmer		Jeff Davis
John MacKay		
Greg Butterfield		
Troy Slade		
Alan Macdonald		

DRAFT

Susan Whittenburg

D. Proposed five-sided lot submittal

Ryan Robinson explained that an application has been received to combine lot 1 of the Thelin Estates Plat A subdivision (Serial No. 53:281:0001) with parcel no. 11:054:0464. There is an existing home on lot 1, while the odd shaped parcel to the west is a legal parcel. A plat amendment has been provided to combine the two properties.

Alpine Development Code definitions, Section 3.01.110, a Lot is defined as follows:

> ***LOT**. A tract of land regardless of any label, that is created by and shown on a subdivision plat that has been recorded in the Office of the County Recorder. Lots shall be generally rectangular in nature, and shall have no more than five sides without an exception being recommended by the Planning Commission and approved by the City Council; the front of a property, located at the front right of way, does not count against this requirement.*

As situated today, lot 1 has four sides, but when combined with the odd shaped parcel to the west, it would have more than five sides. City staff has reviewed the plat amendment and has given conditional approval, subject to the recommendation by the Planning Commission and approval by the City Council of the lot having more than five sides.

Rick Christensen, contractor, said the applicant wants to build a barn on the vacant piece of property. He said the lot already has five sides, but they are hoping it can be grandfathered in because the lot was already in that shape when the owner bought it. He said the owner bought this piece of property from the neighbor and wants to add it to his current property. He plans to scrub the line and combine the lots into one property.

Alan Macdonald said this is an existing lot that is surrounded and there is no way to it. The owner to the east wants to incorporate the funky lot into his lot existing lot and said it makes sense.

MOTION: Planning Commission member Troy Slade moved to recommend approval of the five-sided lot associated with the proposed Thelin Estates Plan B plat amendment.

John Mackay seconded the motion. There were 6 Ayes and 0 Nays (recorded below). The motion passed.

Ayes:	**Nays:**	**Excused:**
Michelle Schirmer		Jeff Davis
John MacKay		
Greg Butterfield		
Troy Slade		
Alan Macdonald		
Susan Whittenburg		

E. Review of Draft Main Street & Gateway Corridor Master Plan: Main Street Design

Ryan Robinson explained that last time we went through the implementation chapter and tonight we're looking at the design guidelines. He said these are intended to replace our existing Gateway Historic Design Guidelines, but if we like part of the old guidelines, we can still make a recommendation to use portions of it. He said what this does is focuses more on the design and the layout and the feel of Main Street and will simplify the process when applicants come in to build and hopefully save us some time in reviewing commercial buildings going forward.

DRAFT

Ryan Robinson said we are breaking down these chapters into the things the Planning Commission primarily wanted to deal with. He said this is the last of the sections we've broken up. In the future we will hold another Public Hearing, so the public has a chance to hear and review all the work that has been done. After the Public Hearing, we'll go back through the minutes and put all the motions together and review the suggested changes.

Ryan Robinson said with the consulting firm that put this together, they gave us three rounds of edits, and we have used one from the steering committee. He said once the Planning Commission makes a recommendation, he'll send it to the committee, and they'll give us another draft with those changes incorporated. Then once the City Council reviews this and makes any amendments, we'll use that as the final edit.

Ryan Robinson said there's a Main Street Civic and Mixed use, and then the Town Center. He said we've talked about a third area by the church owned property having a buffer transition between residential and commercial. He said we talked about the property down by the Art Center and that general area being a transition area where there's residential to commercial, and Main Street's commercial transition to residential to the north.

Alan Macdonald said in a prior meeting we discussed the area to the south to be residential, a flex area for housing with mixed density. He said this area won't be subject to the Main Street type guidelines because those are residential. Ryan Robinson said the guidelines will only apply to commercial and said State Code limits us and we can't dictate design standards for residential unless it's in a specific designated historic district. Alan Macdonald said we did do a little bit of that with the Montdella homes on Main Street.

Alan Macdonald said if hears a complaint from people about Alpine, it's that Alpine looks so hodge podge. He said this is because it has been developed over many decades and has been subjective as to what people like. He said we don't know what the Alpine aesthetic is. Some like mountain modern, some like traditional, like red brick. He asked if we want something more cohesive, more uniform and said in the future, buildings could be torn down and rebuilt. If this is an issue, the way we amend this is to decide what we want it to look like. We need to be more specific, for example stating we want red brick with black windows. This would give a traditional, timeless Utah-looking city as we go forward. If you just say wood, brick, masonry, and stone you will get all kinds of different styles and looks. He said the best example of this is the u-shaped office complex where every single building is made up of something different. He said if the vision for Alpine is a cohesive look, we need something traditional and timeless similar to what has been built along North County Blvd.

John Mackay agreed and said he would say small red brick and wood. Alan Macdonald said we need to limit the building materials. Troy Slade said we are not professional designers and are not trained. Alan Macdonald said, "we know what looks good".

Greg Butterfield said we need to narrow the choices and come up with an architectural design, so we don't end up with something trendy. Michelle Schirmer said she thinks a mix of flat roofs and gabled roofs look nice. This is something you would see on a traditional Main Street in other cities.

Ryan Robinson said Park City has strict design standards which everyone must follow. He said some of the best examples are the ones that were built when the city was founded. Greg Butterfield said we are missing the architectural style and said we need to decide that first before we get to colors and materials. Alan Macdonald said he likes the traditional, federal look and said it would help to have a description in the design standards.

Michelle Schirmer asked if we are trying to be traditional from the Federal Georgian era, or a Utah Traditional. Greg Butterfield said we need to decide our traditional look and not a Washington DC or Boston Traditional. Susan Whittenburg asked if we could tell an applicant what building materials they can use. Alan Macdonald said we can in the Historic Gateway.

Michelle Schirmer asked if we can pull the Town Center on the map down to the Art Center so that all of these design standards keep wrapping the corner because we removed that mixed use to bring the field up with the residential. Alan Macdonald said that had been modified to reflect that.

Michelle Schirmer said she knows we have talked a lot about lighting but wanted to address the dark sky because it is missing from our code. She said she would like to see a dark sky code with downlight and no permanent lighting especially when it's on chasers. She said she would like businesses to be able to designate their business but in a calm way. Alan Macdonald said the more well-lit areas are the downtown commercial areas up to a certain time.

Troy Slade asked what the process would be to drill down on this and get it locked in. Alan Macdonald said what we would do is incorporate this into the Alpine City Main Street Gateway Corridor Small Area Plan. Once that is done, and we have a plan, then we can make amendments to the Gateway Historic Design Guidelines and say this is our plan.

Troy Slade asked if this would just be the Planning Commission doing this or would we get professional help. Alan Macdonald said eventually everything we have done will be sent as a recommendation for approval by the City Council. We will then need to go back and review the current Gateway Historic Guidelines and bring those current with this plan and amend those design guidelines. He said those design guidelines are what future developers would look at and say okay, this is what I've got to do. They'll see if our idea of a Utah Historic Traditional look, red brick etc. ends up in the plan and in our design guidelines, then that's the aesthetic going forward.

Marla Fox asked if this would include homes in the Historic Gateway. Ryan Robinson said no, in the name of affordable housing, the State says cities can't dictate design standards. He said if the home is in an HOA, that could be different or if the home was designated as a historical home. It would have to meet certain criteria to designate historic.

MOTION: Planning Commission member Michelle Schirmer moved to recommend Tabling the Main Street Corridor Gateway Historic District Design Standards until future compilation with the following conditions:

1. The building style be considered for our Gateway Historic District as Utah Historic Traditional.
2. Remove secondary materials totally from the design plan. Materials that will be allowed for construction on Main Street would be red brick, wood, and black framed windows.

Troy Slade seconded the motion. There were 6 Ayes and 0 Nays (recorded below). The motion passed.

Ayes:	**Nays:**	**Excused**
Michelle Schirmer		Jeff Davis
Greg Butterfield		
Alan Macdonald		
Susan Whittenburg		
John MacKay		
Troy Slade		

DRAFT

The Planning Commission had a discussion about coming up with design standards and said they would have to have further discussions about what it is they want, the architectural style, and overall design,

IV. COMMUNICATIONS
None

V. APPROVAL OF PLANNING COMMISSION MINUTES: February 17, 2026

MOTION: Planning Commissioner John MacKay moved to approve the minutes for February 17, 2026, as written.

Greg Butterfield seconded the motion. There were 6 Ayes and 0 Nays (recorded below). The motion passed.

Ayes:	**Nays:**	**Excused:**
Michelle Schirmer		Jeff Davis
John MacKay		
Greg Butterfield		
Jeff Davis		
Troy Slade		
Alan Macdonale		
Susan Whittenburg		

MOTION: Planning Commission member Greg Butterfield moved to adjourn the meeting.

Susan Whittenburg seconded the motion. There were 6 Ayes and 0 Nays (recorded below). The motion passed.

Ayes:	**Nays:**	**Excused:**
Michelle Schirmer		Jeff Davis
John MacKay		
Greg Butterfield		
Troy Slade		
Alan Macdonald		
Susan Whittenburg		

The meeting was adjourned at 8:25 p.m.

DRAFT