MILITARY INSTALLATION DEVELOPMENT AUTHORITY
Design Review Committee Meeting
November 18, 2025

STAFF REPORT

Agenda Item: #6
Prepared By: Robert Donigan, MIDA Planner
Reviewed By: Richard Catten, DRC Counsel

Project: Cormont Model Unit at Lot 10 Site Plan

Location: The proposed Cormont Model Unit is located on Lot 10 within the approved Mayflower Master Development Plan (MDP), west of U.S. Highway 40 near exit 8, on Mayflower Village Drive just east of the proposed Cormont Development.

Applicant: Reef Private Equity

Representative: Saadet Nur Yilmaz

Recommendation: Staff recommends the MIDA DRC approve the Cormont Model Unit at Lot 10 site plan subject to site plan approval being issued upon the completion of the Conditions of Approval as presented in this staff report.

Background:
Per Chapter 2, Section 2.03 (Site Plan) of the Development Standards and Guidelines (MIDA Standards), MIDA requires Site Plan approval before construction on any property within the MIDA Control Area. The Applicant submitted Site Plan plans/documents for the Cormont Model Unit at Lot 10 facility in October 2025. The Applicant is asking for site plan approval from the MIDA DRC.

Project Description:
Located just east of the Cormont development that is currently under construction, the Cormont Model Unit facility is meant to provide a temporary facility to provide mocks up, to review furnishings and finishes, and to coordinate MEP decisions for the proposed Cormont Development buildings. The model unit will be a Sprung structure built on the existing asphalt pad.

Analysis:
The site plan application for the Cormont Model Unit at Lot 10 Site Plan is being evaluated based on Chapter 2 – Review Procedure, Section 2.03 – Site Plan; and Chapter 4 – Standards and Guidelines of the MIDA Standards. A general discussion of key considerations pertaining is included below:

- Parking will be provided on Lot 10, including ADA stalls.
- The structure will require water and sewer connections. JSSD approval required. Feasibility letter has been provided.
- This is a temporary facility that will be removed long term. MIDA's current Standards do not speak to temporary facilities and how long an approved site plan for a temporary facility is good for. Staff recommends that the DRC establishes a three year approval limit for this temporary facility.

RECOMMENDED ACTION:

Staff recommends the MIDA DRC approve the Cormont Model Unit at Lot 10 Site Plan subject to site plan approval being issued upon completion of the following conditions of approval:

1. The approved site plan is valid for three years from issuance of Occupancy Permit.

VICINITY MAP

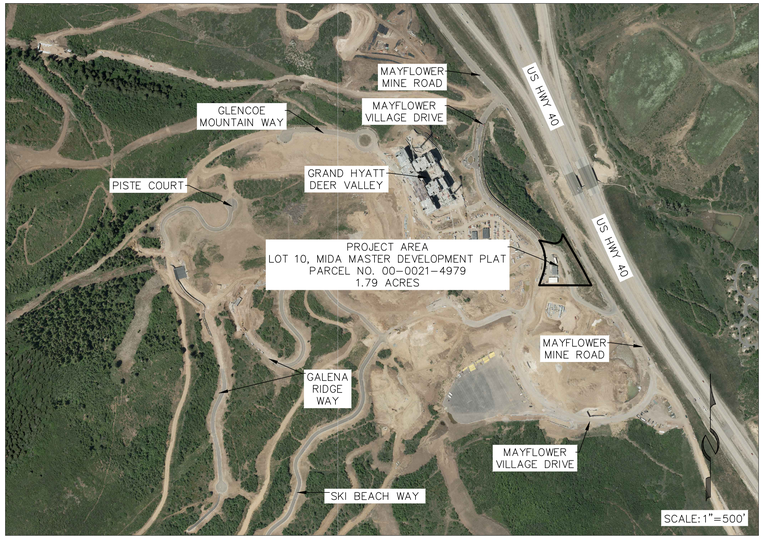

LOT 10 SPRUNG STRUCTURE
SECTION 25, T2S, R4E SLB&M
WASATCH COUNTY, UT
PARCEL NO. 00-0021-4979

SHEET INDEX

CIVIL ENGINEER

ALLIANCE ENGINEERING

P.O. BOX 2664 | 2700 W. HOMESTEAD RD. STE 50,60
PARK CITY, UT 84098 | 435-649-9467

REGISTERED PROFESSIONAL ENGINEER
No. 4857264
MICHAEL DEMKOWICZ
10/23/2025
STATE OF UTAH

435-649-9467
ALLIANCE ENGINEERING
CONSULTING ENGINEERS | LAND PLANNERS | SURVEYORS
P.O. Box 2664 | 2700 West Homestead Road
Suite 50, 60 | Park City, Utah 84098

STAFF:
THOMAS VAUGHN
GABRIAL HARJU

DATE: 10/23/2025

COVER SHEET
LOT 10, MIDA MASTER DEVELOPMENT PLAT
SPRUNG STRUCTURE

FOR: REEF PRIVATE EQUITY
JOB NO.: 14-8-23
FILE: X:\WasatchCounty\dwg\Mayflower 2023\Marcella Reef Site Office (14-8-23)-Second Trailer\140523-Site Office Trailer Civil.dwg

Slopes Table			
Number	Minimum Slope	Maximum Slope	Color
1	30.00%	1000.00%	

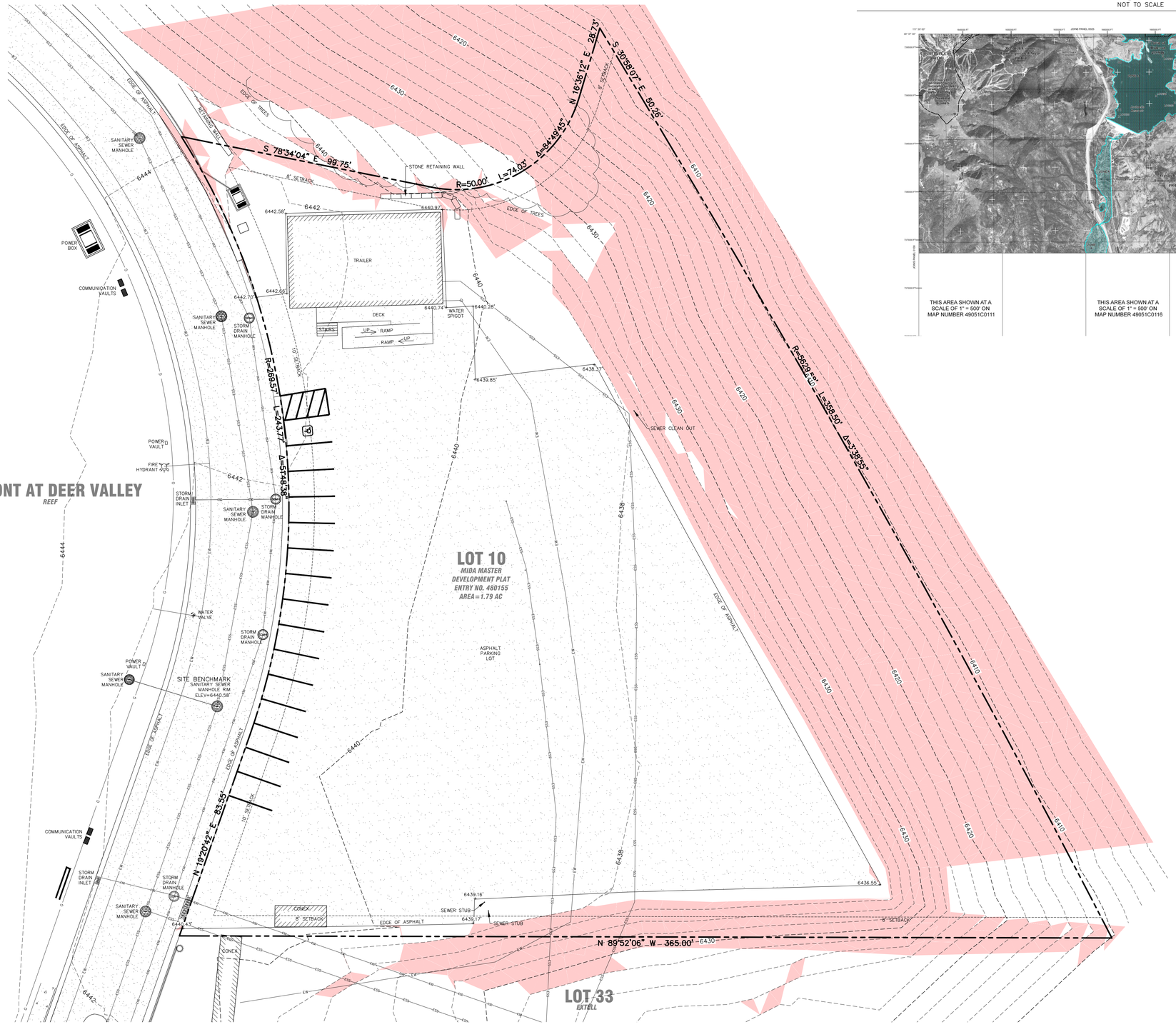

FEMA MAP
NOT TO SCALE

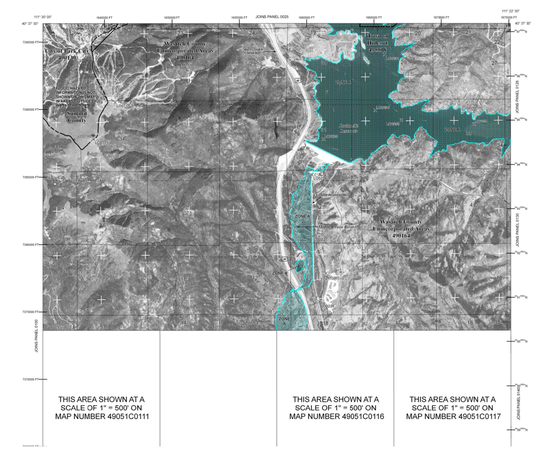

LEGEND

SPECIAL FLOOD HAZARD AREAS (SFHAs) SUBJECT TO INUNDATION BY THE 1% ANNUAL CHANCE FLOOD

The 1% annual chance flood (100-year flood), also known as the base flood, is the flood that has a 1% chance of being equaled or exceeded in any given year. The Special Flood Hazard Areas include Zones A, AE, AH, AO, AR, A99, V, and VE. The Base Flood Elevation is the water surface elevation of the 1% annual chance flood.

ZONE A — No Base Flood Elevations determined.

ZONE AE — Base Flood Elevations determined.

ZONE AH — Flood depths of 1 to 3 feet (usually areas of ponding); Base Flood Elevations determined.

ZONE AO — Flood depths of 1 to 3 feet (usually sheet flow on sloping terrain); average depths determined. For areas of alluvial fan flooding, velocities also determined.

ZONE AR — Special Flood Hazard Area formerly protected from the 1% annual chance flood by a flood control system that was subsequently decertified. Zone AR indicates that the former flood control system is being restored to provide protection from the 1% annual chance or greater flood.

ZONE A99 — Area to be protected from 1% annual chance flood by a Federal flood protection system under construction; no Base Flood Elevations determined.

ZONE V — Coastal flood zone with velocity hazard (wave action); no Base Flood Elevations determined.

ZONE VE — Coastal flood zone with velocity hazard (wave action); Base Flood Elevations determined.

FLOODWAY AREAS IN ZONE AE

The floodway is the channel of a stream plus any adjacent floodplain areas that must be kept free of encroachment so that the 1% annual chance flood can be carried without substantial increases in flood heights.

OTHER FLOOD AREAS

ZONE X — Areas of 0.2% annual chance flood; areas of 1% annual chance flood with average depths of less than 1 foot or with drainage areas less than 1 square mile; and areas protected by levees from 1% annual chance flood.

OTHER AREAS

ZONE X — Areas determined to be outside the 0.2% annual chance floodplain.

ZONE D — Areas in which flood hazards are undetermined, but possible.

COASTAL BARRIER RESOURCES SYSTEM (CBRS) AREAS

OTHERWISE PROTECTED AREAS (OPAs)

CBRS area and OPAs are normally located within or adjacent to Special Flood Hazard Areas.

1% annual chance floodplain boundary

0.2% annual chance floodplain boundary

Floodway boundary

Zone D boundary

CBRS and OPA boundary

Boundary dividing Special Flood Hazard Areas of different Base Flood Elevations, flood depths or flood velocities.

Base Flood Elevation line and value; elevation in feet*

(EL 987) Base Flood Elevation value where uniform within zone; elevation in feet*

* Referenced to the North American Vertical Datum of 1988

Cross-section line

Transect line

23 97 87 Geographic coordinates referenced to the North American Datum of 1983 (NAD 83)

4807000 FT 1000-meter Universal Transverse Mercator grid values, Zone 12

6000000 FT 5000-foot grid values: Utah State Plane Coordinate System, Central Zone (FIPSZONE 4302), Lambert Conformal Conic Projection

DX5510 ⊕ Bench mark (see explanation in Notes to Users section of this FIS report)

● BM 13 River Mile

MAP REPOSITORY
Refer to listing of Map Repositories on Map Index

EFFECTIVE DATE OF COUNTYWIDE
FLOOD INSURANCE RATE MAP

March 15, 2010

EFFECTIVE DATE(S) OF REVISION(S) TO THIS PANEL

For community map revision history prior to countywide mapping, refer to the Community Map History table located in the Flood Insurance Study report for this jurisdiction.

To determine if flood insurance is available in this community, contact your insurance agent or call the National Flood Insurance Program at 1-800-638-6620.

MAP SCALE 1" = 2000'
1000 0 2000 6000 FEET
500 0 500 1500 METERS

20' 0 20' 40'

ESS ESS ESS — EXISTING SANITARY SEWER

EW — EXISTING WATER

ESD ESD ESD — EXISTING STORM DRAIN

G — EXISTING GAS

REGISTERED PROFESSIONAL ENGINEER
No. 4857264
MICHAEL DEMKOWICZ
10/23/2025
STATE OF UTAH

435-649-9467
ALLIANCE ENGINEERING
CONSULTING ENGINEERS | LAND PLANNERS | SURVEYORS
P.O. Box 2664 | 2700 West Homestead Road
Suite 50, 60 | Park City, Utah 84098

STAFF: THOMAS VAUGHN
GABRIAL HARJU

DATE: 10/23/2025

EXISTING CONDITIONS
LOT 10, MIDA MASTER DEVELOPMENT PLAT
SPRUNG STRUCTURE

FOR: REEF PRIVATE EQUITY
JOB NO.: 14-8-23
FILE: X:\WasatchCounty\dwg\Mayflower 2023\Marcella Reef Site Office (14-8-23)-Second Trailer\140523-Site Office Trailer Civil.dwg

SHEET 1 OF 4

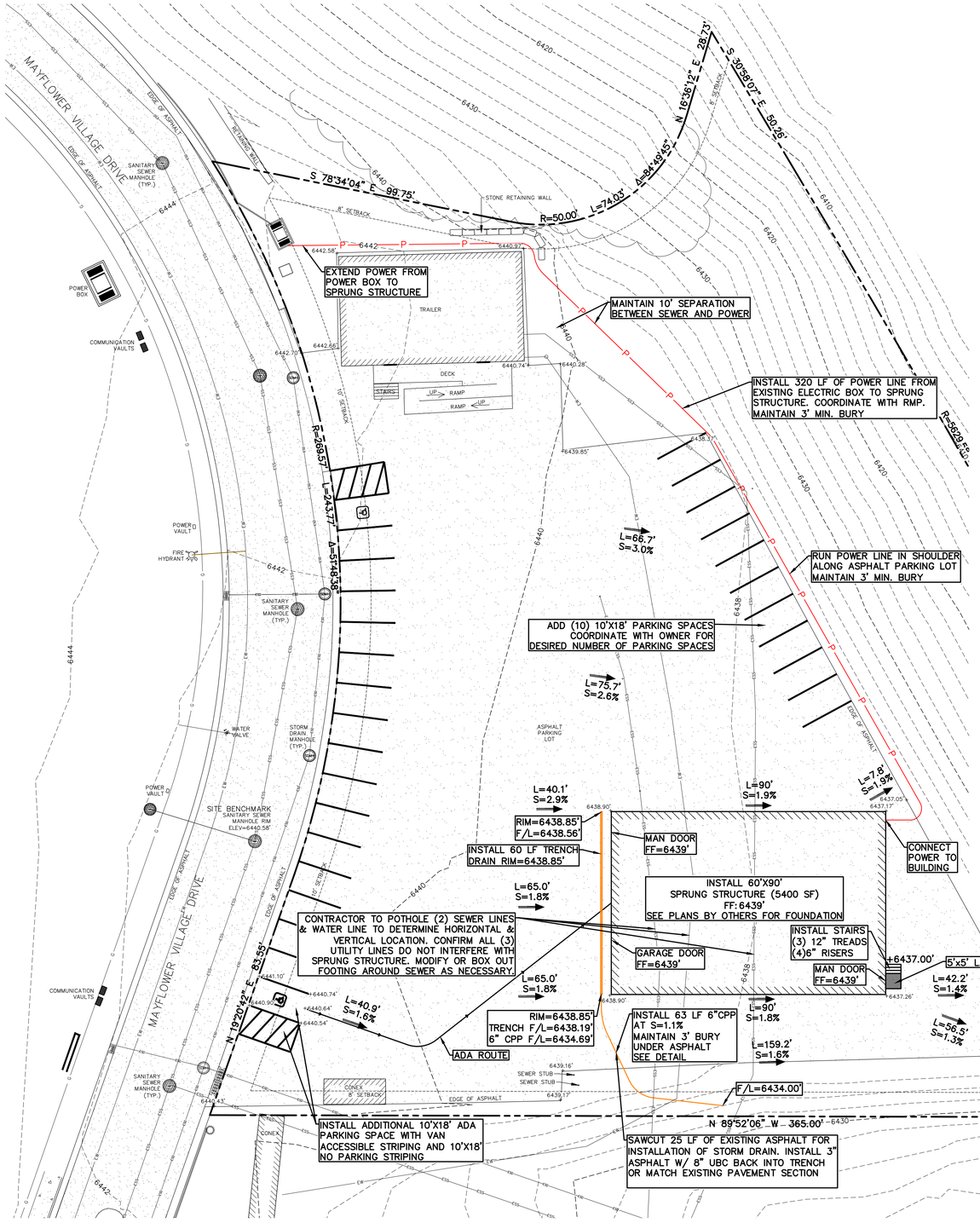

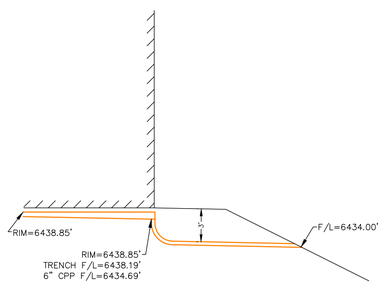

TRENCH DRAIN DETAIL
NOT TO SCALE

Installation Specification

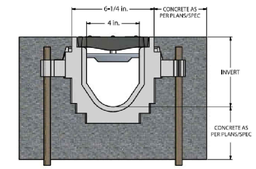

4" Throat / 6-1/4" Overall Width

Consult Plans and Specifications

TRENCH NUMBER	DIMENSIONS IN INCHES [MM]		MAX. FLOW RATE			APPROX. WEIGHT LESS GRATE (LB [KG])
	SHALLOW INVERT	DEEP INVERT	GPM	LPS	CFS	
8601	3.50 [89]	4.10 [104]	93	6	0.207	14 [6.2]
8602	4.10 [104]	4.70 [119]	122	8	0.272	15 [6.8]
8603	4.70 [119]	5.30 [135]	152	10	0.339	16 [7.4]
8603N	5.30 [135]	5.30 [135]	–	–	–	17 [7.7]
8604	5.30 [135]	5.90 [150]	183	12	0.408	18 [8.3]
8605	5.90 [150]	6.50 [165]	214	14	0.477	20 [8.9]
8606	6.50 [165]	7.10 [180]	245	16	0.546	21 [9.5]
8606N	7.10 [180]	7.10 [180]	–	–	–	22 [10]
8607	7.10 [180]	7.70 [196]	276	17	0.615	23 [10.6]
8608	7.70 [196]	8.30 [211]	308	19	0.686	25 [11.2]
8609	8.30 [211]	8.90 [226]	339	21	0.755	26 [11.8]
8610	8.90 [226]	9.50 [241]	371	23	0.827	27 [12.4]
8611	9.50 [241]	10.1 [257]	403	26	0.898	29 [13]
8612	10.10 [257]	10.7 [272]	435	28	0.969	30 [13.6]
8612N	10.70 [272]	10.7 [272]	–	–	–	30 [13.6]
8613	10.70 [272]	11.3 [287]	467	30	1.041	31 [14.2]
8614	11.30 [287]	11.9 [302]	498	32	1.11	33 [14.8]
8615	11.90 [302]	12.5 [318]	530	34	1.181	34 [15.4]

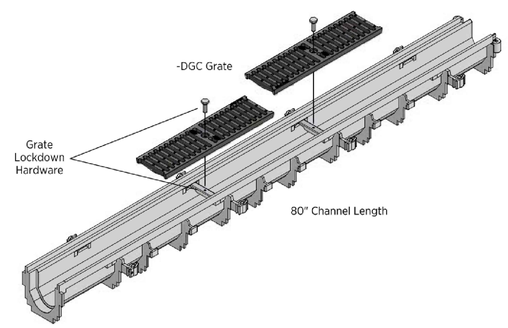

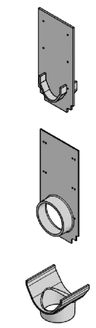

Z886 System Profile

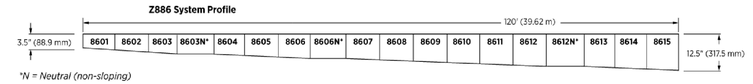

**N = Neutral (non-sloping)*

5

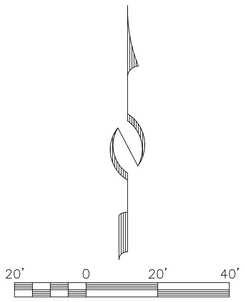

ESS ESS ESS	EXISTING SANITARY SEWER
EW	EXISTING WATER
ESD ESD ESD	EXISTING STORM DRAIN
G	EXISTING GAS
P P P P	PROPOSED POWER

REGISTERED PROFESSIONAL ENGINEER
No. 4857264
MICHAEL DEMKOWICZ
10/23/2025
STATE OF UTAH

Know what's below. Call 811 before you dig.
BLUE STAKES OF UTAH
UTILITY NOTIFICATION CENTER, INC.
www.bluestakes.org
1-800-662-4111

ALLIANCE ENGINEERING
435-649-9467
CONSULTING ENGINEERS | LAND PLANNERS | SURVEYORS
P.O. Box 2664 | 2700 West Homestead Road
Suite 50, 60 | Park City, Utah 84098

STAFF: THOMAS VAUHGN
GABRIAL HARJU

DATE: 10/23/2025

SITE, GRADING & UTILITY PLAN
LOT 10, MIDA MASTER DEVELOPMENT PLAT
SPRUNG STRUCTURE

FOR: REEF PRIVATE EQUITY
JOB NO.: 14-8-23
FILE: X:\WasatchCounty\dwg\Mayflower 2023\Marcella Reef Site Office (14-8-23)-Second Trailer\140523-Site Office Trailer Civil.dwg

SHEET 2 OF 4

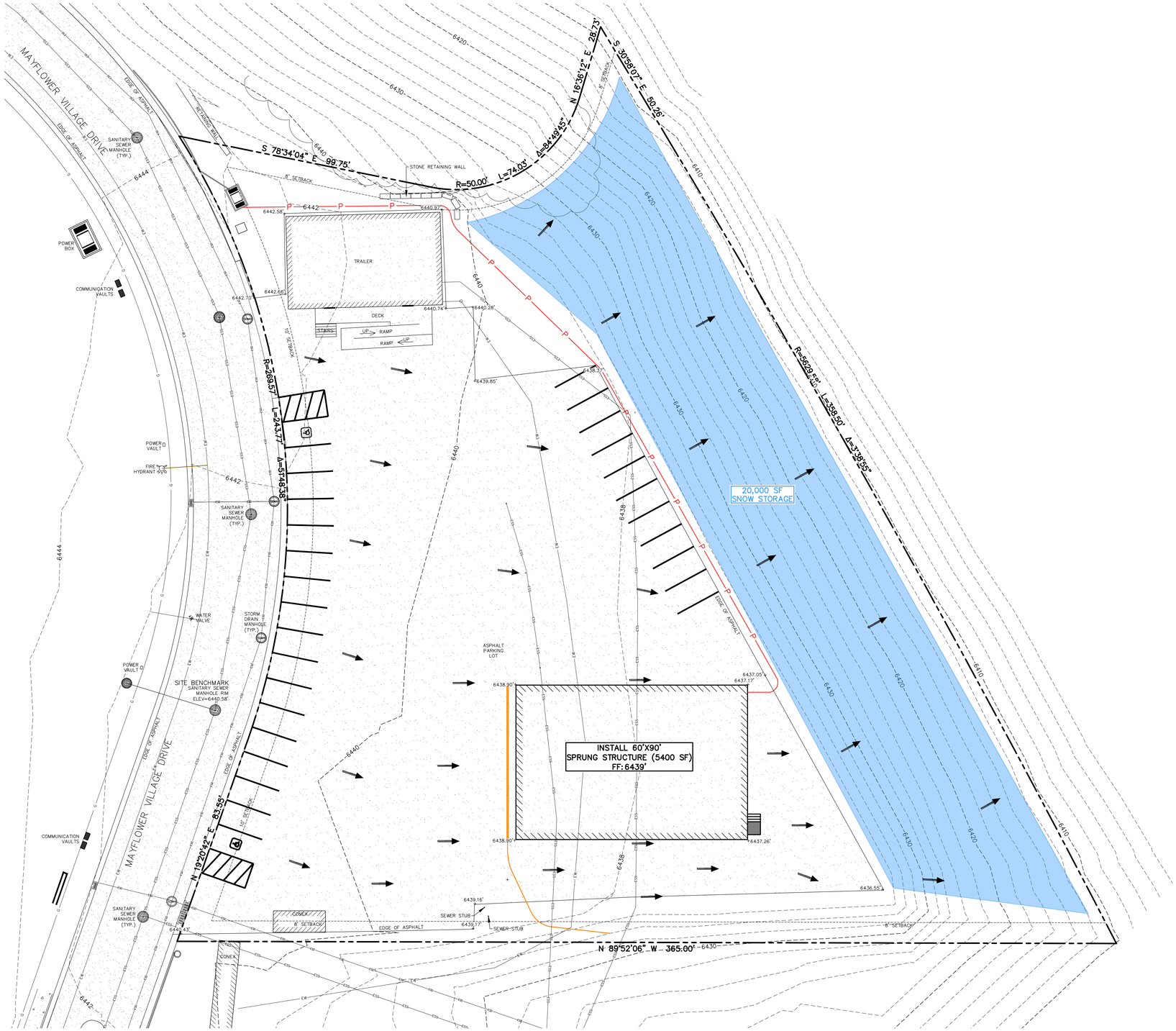

NOTE:

1.ARROWS POINT IN THE DIRECTION OF WATER FLOW.

ESS ESS ESS	EXISTING SANITARY SEWER
EW	EXISTING WATER
ESD ESD ESD	EXISTING STORM DRAIN
G	EXISTING GAS
P P P P	PROPOSED POWER

REGISTERED PROFESSIONAL ENGINEER
No. 4857264
MICHAEL DEMKOWICZ
10/23/2025
STATE OF UTAH

Know what's below. Call 811 before you dig.
BLUE STAKES OF UTAH
UTILITY NOTIFICATION CENTER, INC.
www.bluestakes.org
1-800-662-4111

ALLIANCE ENGINEERING
435-649-9467
CONSULTING ENGINEERS | LAND PLANNERS | SURVEYORS
P.O. Box 2664 | 2700 West Homestead Road
Suite 50, 60 | Park City, Utah 84098

STAFF:
THOMAS VAUGHN
GABRIAL HARJU

DATE: 10/23/2025

SNOW REMOVAL & DRAINAGE PLAN
LOT 10, MIDA MASTER DEVELOPMENT PLAT
SPRUNG STRUCTURE

FOR: REEF PRIVATE EQUITY
JOB NO.: 14-8-23
FILE: X:\WasatchCounty\dwg\Mayflower 2023\Marcella Reef Site Office (14-8-23)-Second Trailer\140523-Site Office Trailer Civil.dwg

SHEET 3 OF 4

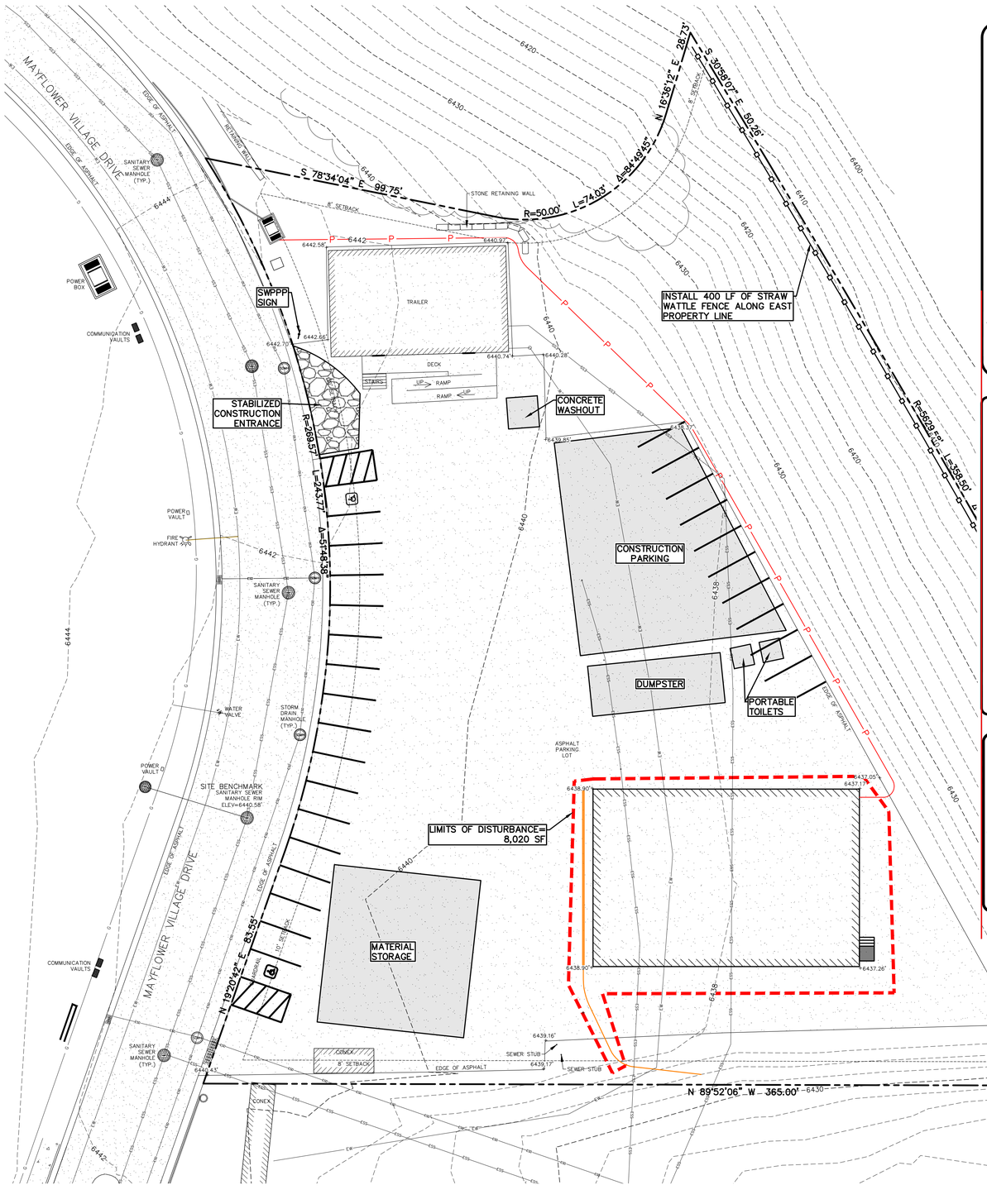

SILT FENCE

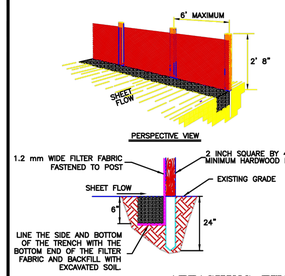

INSTALLATION:
1. Where possible, layout the silt fence 5 to 10 feet beyond the toe of slope.
2. Align the fence along the contour as close as possible.
3. When excavating the trench, use machinery that will produce no more than the desired dimension.
4. Place posts 6 foot on center along contour (or use pre assembled unit) and drive 2 feet (min.) into ground. Excavate an anchor trench (8 inches wide and 8 inches deep) immediately up-gradient of posts.
5. Cut fabric to required width, unroll along length of barrier and drape over barrier. Secure fabric to, stakes with staples, or similar, with trailing edge extending into anchor trench.
6. Backfill trench over filter fabric to anchor.

MAINTENANCE:
1. Inspect immediately after any rainfall and at least daily during prolonged rainfall.
2. Look for runoff bypassing ends of barriers or undercutting fence (repair immediately).
3. Repair or replace damaged areas of the fence and remove accumulated sediment.
4. Re-anchor fence as necessary to prevent shortcutting.
5. Remove accumulated sediment when it reaches ½ the height of the fence.

ATTACHING TWO SILT FENCES

1. PLACE THE END POST OF THE SECOND FENCE INSIDE THE END POST OF THE FIRST FENCE.
2. ROTATE BOTH POSTS AT LEAST 180 DEGREES IN A CLOCKWISE DIRECTION TO CREATE A TIGHT SEAL WITH THE FABRIC MATERIAL.
3. DRIVE BOTH POSTS ABOUT 24 INCHES INTO THE GROUND AND BURY FLAP.

STRAW WATTLE DETAIL
NO SCALE

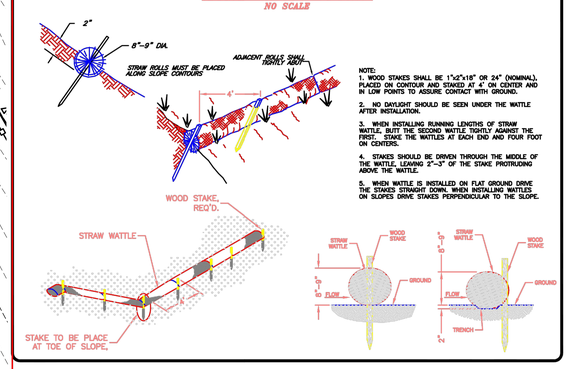

NOTE:
1. WOOD STAKES SHALL BE 1"x2"x18" OR 24" (NOMINAL). PLACED ON CONTOUR AND STAKED AT 4' ON CENTER AND IN LOW POINTS TO ASSURE CONTACT WITH GROUND.
2. NO DAYLIGHT SHOULD BE SEEN UNDER THE WATTLE AFTER INSTALLATION.
3. WHEN INSTALLING RUNNING LENGTHS OF STRAW WATTLE, BUTT THE SECOND WATTLE TIGHTLY AGAINST THE FIRST. STAKE THE WATTLES AT EACH END AND FOUR FOOT ON CENTERS.
4. STAKES SHOULD BE DRIVEN THROUGH THE MIDDLE OF THE WATTLE, LEAVING 2"-3" OF THE STAKE PROTRUDING ABOVE THE WATTLE.
5. WHEN WATTLE IS INSTALLED ON FLAT GROUND DRIVE THE STAKES STRAIGHT DOWN. WHEN INSTALLING WATTLES ON SLOPES DRIVE STAKES PERPENDICULAR TO THE SLOPE.

STABILIZED CONSTRUCTION ENTRANCE

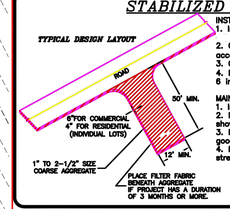

INSTALLATION:
1. Install at any point of ingress or egress at a construction site.
2. Clear and grub area and grade to provide slope shown for driveway, or access/intersection. If adjacent to waterway, use a maximum slope of 2%.
3. Compact subgrade and place filter fabric.
4. Place coarse aggregate, 1 to 2 ½ inches size, to a minimum depth of 6 inches for commercial projects, and 4 inches for residential projects.

MAINTENANCE:
1. Inspect daily for loss of gravel or sediment buildup.
2. Inspect adjacent roadway for sediment deposit and clean by sweeping or shoveling.
3. Repair entrance and replace gravel as required to maintain control in good working condition.
4. Expand stabilized area as required to accommodate traffic, and off site street parking and prevent erosion at driveway.

Summit County Required Inspections

Inspection	Description/Requirements	Contact
Rough Grade Engineering	**Required prior to scheduling a footing inspection.** Rough cut of driveway, stabilized construction entrance, sediment control BMPs, & concrete washout all must be installed per site plan.	Engineering
Footings	Schedule after steel is in place and before concrete is poured	Building
Foundation	Schedule after steel is in place in forms and before concrete is poured	Building
Under Slab Plumbing/Heating	Schedule before concrete is poured or plumbing has been backfilled	Building
Certificate of Elevation and/ or Survey	Performed by a licensed surveyor. Required before scheduling a Floor Framing Inspection	Planning
Floor Framing/ Foundation Drain	Required prior to placing floor sheeting	Building
Shear Wall	After the building is "up to square," all shear walls have been nailed, and all tie downs and shear wall connections installed	
Fire Sprinkler	Required prior to Four-Way Inspection, when required by Local Fire District	Building
Four-Way	All rough electrical, plumbing, and mechanical has been installed. All framing is complete, shear walls have been previously inspected, and truss specifications are on site for review. Plumbing must have either an air or water pressure test on them when the inspector arrives.	Building
Weather Barrier/ Stucco Lath	Weather barrier must be inspected prior to applying veneer. Approved stucco I.C.C. research reports on site	Building
Gas Line/Meter Set	Required before gas meter clearance is given to Dominion	Building
Masonry wall/ bond beam	Steel in masonry and before concrete/grout is poured	Building
Insulation	Pre-drywall insulation certificate required	Building
Drywall Nailing	Required before drywall is taped	Building
Power to Panel	Building must be up with permanent roof installed	Building
Pre-Surface Engineering	Before driveway is paved/stabilized. Erosion control installed on graded slopes greater than 3:1. Driveway graded to final slope.	Engineering
Final Engineering	**Required prior to Certificate of Occupancy** and/or bond release. Driveway paved/ stabilized w/ non-tracking, permanent material. Final grading must be less than 2:1 slopes, with erosion control measures installed on unretained slopes greater than 3:1	Engineering
Final Building	**Required for Certificate of Occupancy. All work is done, building is complete.** Final clearances from wastewater district, Health Department for septic, and Fire District for sprinkler system must be on site for this inspection.	Building
Certificate of Occupancy	No person may occupy the structure until CofO is issued. Final clearances must be obtained and presented to the Building Dept: Final from Building, Final from Engineering, Final from Fire District (where required), Final from Water District or Health Dept (where required).	Building
SWP3/ECP Bond Release	Site must be 100% stabilized (revegetated or covered) to at least 70% density.	Engineering

Construction Mitigation Plan Notes

- Show location for dumpster, portable toilets, materials storage, parking
- Construction parking/traffic may not block the street without a permit (available from the Engineering Division)
- Mud tracked out onto the street must be cleaned prior to the end of the work day
- The construction site must be maintained in a neat manner. Trash and other debris may not accumulate outside the dumpster.
- Roadside parking is not allowed from November 1st to April 1st

- Perform washout of concrete trucks offsite or in designated concrete washout areas only.
- Do not wash out concrete trucks onto the ground, or into storm drains, open ditches, streets, or streams.
- Do not allow excess concrete to be dumped onsite, except in designated concrete washout areas.

Concrete washout areas may be prefabricated concrete washout containers, or self-installed structures (above-grade or below-grade).
- Prefabricated containers are most resistant to damage and protect against spills and leaks. Companies may offer delivery service and provide regular maintenance and disposal of solid and liquid waste.
- If self-installed concrete washout areas are used, below-grade structures are preferred over above-grade structures because they are less prone to spills and leaks.
- Self-installed above-grade structures should only be used if excavation is not practical.

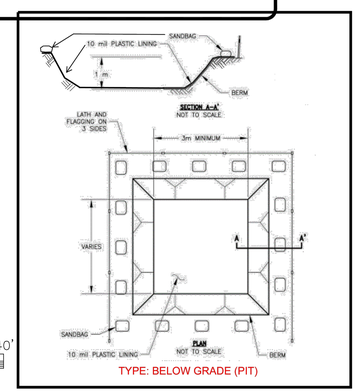

TYPE: BELOW GRADE (PIT)

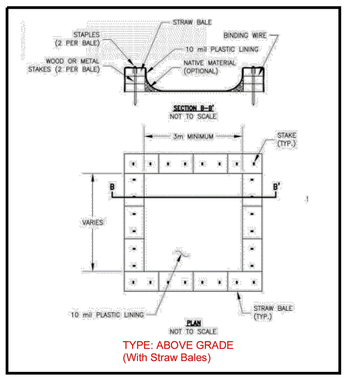

TYPE: ABOVE GRADE
(With Straw Bales)

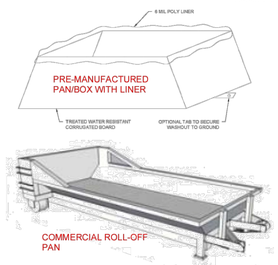

NOTES:
1. ALL DISTURBANCE SHALL OCCUR WITHIN THE EXISTING ASPHALT, THUS NO RESEEDING SHALL BE REQUIRED.
2. NO ADDITIONAL HARDSCAPE WILL BE ADDED TO THE SITE, THUS NO ADDITIONAL ON SITE STORM WATER DETENTION SHALL BE REQUIRED.

ESS — EXISTING SANITARY SEWER
EW — EXISTING WATER
ESD — EXISTING STORM DRAIN
G — EXISTING GAS
P — PROPOSED POWER

REGISTERED PROFESSIONAL ENGINEER
No. 4857264
MICHAEL DEMKOWICZ
10/23/2025
STATE OF UTAH

Know what's below. Call 811 before you dig.
BLUE STAKES OF UTAH
UTILITY NOTIFICATION CENTER, INC.
www.bluestakes.org
1-800-662-4111

ALLIANCE ENGINEERING
435-649-9467
CONSULTING ENGINEERS | LAND PLANNERS | SURVEYORS
P.O. Box 2664 | 2700 West Homestead Road
Suite 50, 60 | Park City, Utah 84098

STAFF: THOMAS VAUGHN, GABRIAL HARJU
DATE: 10/23/2025

CMP/SWPPP
LOT 10, MIDA MASTER DEVELOPMENT PLAT
SPRUNG STRUCTURE
FOR: REEF PRIVATE EQUITY
JOB NO.: 14-8-23
FILE: X:\WasatchCounty\dwg\Mayflower 2023\Marcella Reef Site Office (14-8-23)-Second Trailer\140523-Site Office Trailer Civil.dwg

SHEET 4 OF 4

GENERAL NOTES

STRUCTURE LOCATION

9164 N. MAYFLOWER VILLAGE DRIVE
PARK CITY, UT 84060

DESIGN CRITERIA

CODES AND STANDARDS
2021 INTERNATIONAL BUILDING CODE (IBC)
ASCE 7-16
AISC 360-16
ASCE 55-16

VERTICAL LOADS ROOF
DEAD LOAD = SELF WEIGHT + 3.4 PSF (FABRIC & UTILITY)
LIVE LOAD = 0 PSF (BOUNDARY-LESS SHAPE OF THE SHELL COUPLED WITH THE SLIPPERY CANVAS DOES NOT PERMIT SAFE ACCESS TO THE TOPSIDE, NOR CAN ANY RE-ROOFING WORK BE UNDERTAKEN)
ROOF SNOW LOAD = 20 PSF
GROUND SNOW LOAD= 88PSF
Ce=1.0, Ct=1.0, Cs=0.68, Is=1.0
FOR SNOW AREAS ONLY - THIS STRUCTURE IS DESIGNED TO SHED/RELEASE SNOW, THE PERIMETER OF THE STRUCTURE SHALL BE KEPT CLEAR.
SEE SITE-SPECIFIC SNOW STUDY FOR EVIDENCE OF THE STRUCTURE 'S ABILITY TO SHED/RELEASE SNOW.

LATERAL LOADS
SEISMIC
RISK CATEGORY: II
SEISMIC DESIGN CATEGORY: D
SITE CLASS: D - DEFAULT
SS = 0.550
S1 = 0.196
Fa = 1.360
Fv = 2.208
SDS = 0.499
SD1 = 0.289
PGA = 0.329
ALTERNATIVE STRUCTURAL SYSTEMS GOVERN SEISMIC DESIGN (ASCE 7-16 SECTION 12.2.1.1)
R=3.0 ALUMINUM ORDINARY MOMENT FRAME, TRANSVERSE (ADM 2020 PART II SECTION B.2.1)
R=3.0 ALUMINUM ORDINARY CONCENTRICALLY BRACED FRAME, LENGTHWISE (LESS DUCTILE THAN STEEL OCBF W/ R=3.25)
BUILDING HEIGHT= 26'-1 9/16"
IE = 1.0
Ωo = 2.5
Cd = 3.0
IP(Component Importance Factor) = 1.0
CS = 0.166
STRUCTURE'S WEIGHT W = 38.15 KIPS
SEISMIC BASE SHEAR = WxCs = 6.33 KIPS (ASD)
SEISMIC FORCE RESISTING SYSTEM: MOMENT RESISTING FRAME (SHORT DIRECTION) AND CABLE BRACED (LONG DIRECTION)
ANALYSIS PROCEDURE: EQUIVALENT LATERAL FORCE
LINEAR STATIC WIND
VULT = 103 MPH
RISK CATEGORY: II
EXPOSURE CATEGORY: C
GCPI = ±0.18

UTILITY LOADS

SPRUNG STRUCTURES ARE DESIGNED TO SUPPORT AN AVERAGE AND BALANCED UTILITY LOAD OF 2 PSF, COMPRISED OF SUCH ITEMS AS SPRINKLER LINES, HVAC DUCTS, ELECTRICAL, LIGHTING, FANS, CEILING GRIDS, AUDIO-V/ISUAL EQUIPMENT, ETC. THE SEISMIC EFFECT AND FORCES CAUSED BY THE UTILITY LOAD ALLOWANCE ARE TAKEN INTO CONSIDERATION IN THE DESIGN OF THE STRUCTURE.

FOR MANY STRUCTURES, THE WIND EFFECT FROM THE DESIGN WIND SPEED EXCEEDS THE FORCES THE STRUCTURE WILL SEE FROM THE SEISMIC DEMAND CAUSED BY THE PROPOSED SUSPENDED UTILITIES. REGARDLESS OF WHAT CONTROLS ENGINEERING REQUIREMENTS, ALL STRUCTURAL DESIGNS INCLUDE THIS 2-PSF UTILITY LOAD ALLOWANCE, AND ARE ENSURED TO HAVE SUFFICIENT CAPACITY TO UNIFORMLY SUPPORT IT.

THE MAXIMUM CONCENTRATED LOAD AT ANY ATTACHMENT POINT IS 300 LBS.

CONCENTRATED LOADS GREATER THAN 300 LBS MUST BE APPROVED BY SPRUNG, AND IF PRESENT, REQUIRE A PROJECT SPECIFIC UTILITY LOAD STUDY TO BE CONDUCTED.

ATTACHMENT OF THE UTILITIES MUST ONLY BE TO THE BOTTOM FLANGE OF THE (FRAME) BEAM AND CAN BE ACHIEVED USING THE FLANGE`S BOLT CHASE (3/8" DIA. FOR 5X10 BEAMS & 1/2" DIA. FOR 8x12 BEAMS). FOR STRUCTURES WITHOUT AN INTERIOR LINER, APPROVED SPECIALTY BEAM CLAMPS OR THE BOLT CHASE MAY BE USED TO ATTACH UTILITIES TO THE ALUMINUM ARCHES. BEAM CLAMPS SHALL ENGAGE THE BOTTOM FLANGE OF THE ARCH BEAM ON BOTH SIDES OF THE WEB BEAM CLAMPS SHALL NOT ENGAGE THE ROPE CHASE. ECCENTRIC CONNECTIONS TO THE FLANGE ARE NOT PERMITTED, REGARDLESS OF ATTACHMENT METHOD.

NO UTILITY LOADS CAN BE ATTACHED TO THE (FRAME) BEAMS WITH SCREWS OR OTHER METHODS THAT PUNCTURE THE BEAM`S FLANGES OR WEB. UNDER NO CIRCUMSTANCES CAN LOADS BE ATTACHED TO PURLINS/SPREADERS OR CABLES. ANY ATTACHMENT TO THE STRUCTURE SHOULD BE FLEXIBLE ENOUGH TO ALLOW FOR THE MOVEMENT OF THE STRUCTURE IN HIGH WIND CONDITIONS. ALL METHODS AND DESIGN OF ATTACHMENT OF THE UTILITIES TO THE STRUCTURE ARE THE RESPONSIBILITY OF YOUR CLIENT `S ENGINEER.

QUALITY CONTROL

ISO 9001:2021
INSPECTION DOCUMENTATION IS AS PER THE ISO STANDARD AND AS PER ADM CHAPTER N.2.

ALUMINUM:
- MIL CERTS ARE CHECKED FOR CONFORMANCE WITH SPRUNG'S SPECIFICATIONS.
- ALUMINUM PROFILES ARE RANDOMLY SELECTED TO ENSURE CONFORMANCE TO ASTM B209-14.
- ALL CURVED SECTIONS FROM BENDERS ARE TO BE PLACED IN A JIG AND CHECKED FOR GEOMETRIC TOLERANCES.
- MANUFACTURING CONSIST OF CUTTING OF THE ALUMINUM EXTRUSIONS, DRILLING OF HOLES C&C MACHINES AND PUNCH PRESSES WITH DIES.
- FABRICATED PARTS ARE VISUALLY CHECKED TO ENSURE IT CONFORMS WITH SHOP DRAWINGS.

STEEL PARTS:
- ALL WELDED STRUCTURAL STEEL COMPONENTS ARE FABRICATED IN AN AWS SHOP.
- ALL STRUCTURAL STEEL COMPONENTS ARE HOT DIPPED GALVANIZED TO ASTM A153-2016A STANDARDS.

MEMBRANE:
- UPON RECEIPT OF MATERIALS, MIL CERTS ARE CHECKED FOR CONFORMANCE WITH SPRUNG'S SPECIFICATIONS.
- AS MEMBRANE IS PATTERNED AND ASSEMBLED, A VISUAL CHECK OF THE MEMBRANE TAKES PLACE. FLAWED MATERIAL IS PUT ASIDE.
- COMPLETED MEMBRANE PANELS ARE VISUALLY CHECKED TO ENSURE DIMENSIONAL ACCURACY.

MATERIALS

ALUMINUM: ADM 2020
6351-T6, DESIGN & FABRICATION SHALL BE PER THE ALUMINUM DESIGN MANUAL.
MECHANICAL PROPERTIES:

TENSION
Fu ULTIMATE = 42 ksi Fy YIELD = 37 ksi ELONGATION = 8%

SHEAR
Fsu ULTIMATE = 25 ksi Fsy YIELD = 22 ksi

BEARING
Fb ULTIMATE = 84 ksi

MEMBRANE: ASCE-55-16

OUTER MEMBRANE - FERRARI FLEXLIGHT 942 OPAQUE PVDF

-	FINISHED COATED WEIGHT	26 oz/yd^2 +/- 5%
-	TEAR RESISTANCE	110/110 lbs/in
-	TENSILE STRENGTH	430/430 lbs/in
-	ADHESION	15 lbs/in
-	GRAB TENSILE	630/630 lbf
-	TONGUE TEAR	160/90 lbs
-	ADHESION	15/15 lbs/in
-	TRAPEZOIDAL SHEAR STRENGTH	68/68 lbs
-	HYDROSTATIC RESISTANCE	275 psi
-	LOW TEMPERATURE	1/8" MANDREL, 4hr - PASS @ -40 DEGREES F

INNER LINER - HERCULITE EXCEL 14

-	FINISHED COATED WEIGHT	14 +/- 2 oz/yd^2
-	TONGUE TEAR	120/155 lbf
-	GRAB TENSILE	230/215 lbf
-	STRIP TENSILE 1"	170/140lbf/in
-	ADHESION	12 lbf/in
-	HYDROSTATIC RESISTANCE	380psi
-	LOW TEMPERATURE	1/8" MANDREL, 4hr - PASS @ -40 DEGREES F

STRUCTURE MEMBRANE MEETS:
- NFPA 701
- CALIFORNIA STATE FIRE MARSHALL
- ASTM-E-84 CLASS A

STEEL: AISC 360-16
- 44-ksi Fy STRENGTH (44W)

ALL STEEL IN CONTACT WITH ALUMINUM SHALL BE HOT DIPPED GALVANIZED TO ASTM A153-09 STANDARDS. DESIGN AND FABRICATION OF STRUCTURAL STEEL SHALL BE IN CONFORMANCE WITH AISC 360-16 & ASTM A572-15 GRADE 42 COMPLIANT.

ALL WELDS AND WELDING SHALL BE IN ACCORDANCE WITH THE SPECIFICATIONS OF THE "THE AMERICAN WELDING SOCIETY."

ALL WELDS SHALL BE MADE WITH E70XX ELECTRODES AND BY WELDERS CERTIFIED BY AWS STANDARDS WITHIN THE LAST 12 MONTHS.

STRUCTURAL BOLTS:
STRUCTURAL BOLTS, ZINC-DICHROMATE PLATE SAE GRADE 8. ALL STRUCTURAL BOLTS SHALL BE TIGHTENED TO A SNUG TIGHT CONDITION; I.E., ALL PLIES SHALL BE BROUGHT INTO FIRM CONTACT WITH A FEW IMPACTS OF AN IMPACT WRENCH OR THE FULL EFFORT OF A MAN WITH A SPUD WRENCH.

CABLE BRACING: ASCE 19-16
- ALL CABLE BRACING 1/2" DIAMETER STEEL GALVANIZED AIRCRAFT CABLE C/W HOT DIPPED GALVANIZED HEAVY DUTY THIMBLE EYES. 6X19+ IWRC, 26,600 LBS MINIMUM BREAKING STRENGTH.
- 5/8" X 9" JAW/JAW TURNBUCKLES - HOT DIPPED GALVANIZED
- 5/8" SHACKLES - HOT DIPPED GALVANIZED

DISSIMILAR METALS:
AS PER THE ALUMINUM DESIGN MANUAL, ALUMINUM CAN BE COUPLED TO MAGNESIUM, ZINC, CADMIUM, AND PASSIVE STAINLESS STEEL WITHOUT THE THREAT OF GALVANIC CORROSION.

STRUCTURE ANCHORAGE (EARTH)

1. MR3 EARTH ANCHOR IN CONJUNCTION WITH 2 @ 3/4 " DIA. X 5FT PINS PER COLUMN BASE.
2. SOIL CAPACITY FOR THE EARTH ANCHORING METHOD TO BE REVIEWED AND APPROVED BY A LOCAL ENGINEER.
3. EARTH ANCHORS TO BE PULLED AND LOCKED TO THE VALUES AS OUTLINED ON THE EARTH ANCHOR LAYOUT (BY SPRUNG). ACHIEVED VALUES ARE TO BE RECORDED ON THIS DRAWING AT TIME OF INSTALLATION.
4. EARTH ANCHORS MUST BE PROOF TESTED TO THE LOADS SPECIFIED ON EARTH THE ANCHOR LAYOUT (BY SPRUNG) WITH THE FORESIGHT LL-2 LOAD LOCKER OR AN ENGINEER APPROVED EQUIVALENT.
5. ATTACHMENT OF THE MR3 EARTH ANCHORS TO THE SPRUNG ARCHES TO BE MAINTAINED IN A TAUT CONDITION THROUGH OUT THE LIFE OF THE STRUCTURE.
6. MINIMUM EARTH ANCHOR DEPTH = 7'-0" OR DEEPER DEPENDING ON SOIL CONDITIONS AS DETERMINED BY LOCAL ENGINEER.

STRUCTURE ANCHORAGE (CONCRETE)

HILTI ADHESIVE AND MECHANICAL ANCHORS
THE APPROVAL IS SUBJECT TO THE FOLLOWING CONDITIONS:

1. THE DESIGN INFORMATION LISTED IN THE RESEARCH REPORT AND TABLES ARE VALID FOR THE FASTENERS ONLY. CONNECTED MEMBERS SHALL BE CHECKED FOR THEIR CAPACITY (WHICH MAY GOVERN).
2. THE ANCHORS SHALL BE IDENTIFIED BY LABELS ON THE PACKAGING INDICATING THE MANUFACTURER'S NAME AND PRODUCT DESIGNATION.
3. DESIGN INFORMATION, EDGE DISTANCES, SPACING AND MINIMUM EMBEDMENT REQUIREMENTS SHALL BE PER TABLES IN ICC-ES REPORT NO. ESR-3187.
4. SPECIAL INSPECTION SHALL BE PROVIDED FOR ANCHOR INSTALLATIONS.
5. THE ANCHORS SHALL BE INSTALLED AS PER THE MANUFACTURER'S INSTRUCTIONS EXCEPT AS OTHERWISE STATED IN THIS REPORT. COPIES OF THE INSTALLATION INSTRUCTIONS SHALL BE AVAILABLE AT EACH JOB SITE.
6. THE ADHESIVE ANCHORS AND POST INSTALLED REINFORCING BAR CONNECTORS SHALL NOT BE USED TO SUPPORT FIRE-RESISTIVE CONSTRUCTION, UNLESS IN COMPLIANCE WITH SECTION 5.12 OF ICC-ES ESR3187.
7. MINIMUM CONCRETE COVER PER ACI 318-19 SHALL BE FOLLOWED WHENEVER APPLICABLE.
8. ATTACHMENT TO MASONRY IS OUTSIDE THE SCOPE OF THIS APPROVAL.

STRUCTURAL OBSERVATION

(1) STRUCTURAL OBSERVATION MAY BE REQUIRED FOR THE STRUCTURAL SYSTEM. STRUCTURAL OBSERVATION IS THE VISUAL OBSERVATION AT THE CONSTRUCTION SITE OF THE ELEMENTS AND CONNECTIONS OF THE STRUCTURAL SYSTEM AT SIGNIFICANT CONSTRUCTION STAGES, AND THE COMPLETE STRUCTURE FOR GENERAL CONFORMANCE TO THE APPROVED PLANS AND SPECIFICATIONS. STRUCTURAL OBSERVATION DOES NOT WAIVE THE RESPONSIBILITY FOR THE INSPECTIONS REQUIRED OF THE BUILDING INSPECTOR OR THE DEPUTY INSPECTOR.

(2) THE OWNER SHALL EMPLOY A STATE REGISTERED (AS REQUIRED) CIVIL OR STRUCTURAL ENGINEER OR LICENSED ARCHITECT TO PERFORM THE STRUCTURAL OBSERVATION. LOCAL PLANNING DEPT MAY REQUIRE THE USE OF THE ENGINEER OR ARCHITECT, OR HIS/HER DESIGNEE RESPONSIBLE FOR THE STRUCTURAL DESIGN WHO ARE INDEPENDENT OF THE CONTRACTOR.

(3) THE STRUCTURAL OBSERVER SHALL PROVIDE EVIDENCE OF EMPLOYMENT BY THE OWNER OR THE OWNER'S REPRESENTATIVE. A LETTER FROM THE OWNER, THE OWNER'S REPRESENTATIVE, OR A COPY OF THE AGREEMENT FOR SERVICES SHALL BE SENT TO THE BUILDING INSPECTOR BEFORE THE FIRST SITE VISIT.

(4) THE OWNER OR OWNER'S REPRESENTATIVE SHALL COORDINATE AND CALL FOR A MEETING BETWEEN THE ENGINEER OR ARCHITECT RESPONSIBLE FOR THE STRUCTURAL DESIGN, STRUCTURAL OBSERVER, CONTRACTOR, AFFECTED SUBCONTRACTORS AND DEPUTY INSPECTORS. THE PURPOSE OF THE MEETING SHALL BE TO IDENTIFY THE MAJOR STRUCTURAL ELEMENTS AND CONNECTIONS THAT AFFECT THE VERTICAL AND LATERAL LOAD SYSTEMS OF THE STRUCTURE AND TO REVIEW SCHEDULING OF THE REQUIRED OBSERVATIONS. A RECORD OF THE MEETING SHALL BE INCLUDED IN THE FIRST OBSERVATION REPORT SUBMITTED TO THE BUILDING INSPECTOR.

(5) THE STRUCTURAL OBSERVER SHALL PERFORM SITE VISITS AT THOSE STEPS IN THE PROGRESS OF THE WORK THAT ALLOW FOR CORRECTION OF DEFICIENCIES WITHOUT SUBSTANTIAL EFFORT OR UNCOVERING OF THE WORK INVOLVED. AT A MINIMUM, THE LISTED SIGNIFICANT CONSTRUCTION STAGES ON EITHER THE "STRUCTURAL OBSERVATION/SIGNIFICANT CONSTRUCTION STAGES" FORM OR THE "STRUCTURAL OBSERVATION PROGRAM AND DESIGNATION OF THE STRUCTURAL OBSERVER" FORM I N/FORM.08 (PART 2) REQUIRE A SITE VISIT AND AN OBSERVATION REPORT FROM THE STRUCTURAL OBSERVER.

(6) THE STRUCTURAL OBSERVER SHALL PREPARE A REPORT OF THE "STRUCTURAL OBSERVATION REPORT FORM" I N/FORM.08 (PART 1) FOR EACH SIGNIFICANT STAGE OF CONSTRUCTION OBSERVED. THE ORIGINAL OF THE STRUCTURAL OBSERVATION REPORT SHALL BE SENT TO THE BUILDING INSPECTOR'S OFFICE AND SHALL BE SIGNED AND SEALED (WET STAMP) BY THE RESPONSIBLE STRUCTURAL OBSERVER. ONE COPY OF THE OBSERVATION REPORT SHALL BE ATTACHED TO THE APPROVED PLANS. THE COPY ATTACHED TO THE PLANS SHALL BE SIGNED AND SEALED (WET STAMP) BY THE RESPONSIBLE STRUCTURAL OBSERVER OR THEIR DESIGNEE. COPIES OF THE REPORT SHALL ALSO BE GIVEN TO THE OWNER, CONTRACTOR, AND DEPUTY INSPECTOR. ANY DEFICIENCY NOTED ON THE OBSERVATION REPORT WILL BECOME THE RESPONSIBILITY OF THE STRUCTURAL ENGINEER OR ARCHITECT OF RECORD TO VERIFY ITS COMPLETION BY THE STRUCTURAL OBSERVER.

(7) A FINAL OBSERVATION REPORT MUST BE SUBMITTED WHICH SHOWS THAT ALL OBSERVED DEFICIENCIES WERE RESOLVED AND STRUCTURAL SYSTEM GENERALLY CONFORMS WITH THE APPROVED PLANS AND SPECIFICATIONS. THE LOCAL PLANNING DEPT. MAY NOT ACCEPT THE STRUCTURAL WORK WITHOUT THE FINAL OBSERVATION REPORT AND THE CORRECTION OF SPECIFIC DEFICIENCIES NOTED DURING NORMAL BUILDING INSPECTION.

(8) THE STRUCTURAL OBSERVER SHALL PROVIDE THE ORIGINAL STAMPED AND SIGNED "STRUCTURAL OBSERVATION REPORT FORM" TO THE LOCAL PLANNING DEPARTMENT AND SAFETY BUILDING INSPECTOR.

(9) WHEN THERE IS A NEED TO REPLACE THE STRUCTURAL OBSERVER OF RECORD, THE OWNER SHALL:
A) NOTIFY THE BUILDING INSPECTOR IN WRITING BEFORE THE NEXT INSPECTION BY SUBMITTING COMPLETED "STRUCTURAL OBSERVATION PROGRAM AND DESIGNATION OF THE STRUCTURAL OBSERVER" FORM.
B) CALL AN ADDITIONAL PRE-CONSTRUCTION MEETING, AND
C) FURNISH THE REPLACEMENT STRUCTURAL OBSERVER WITH A COPY OF ALL PREVIOUS OBSERVATION REPORTS.
D) THE NEW STRUCTURAL OBSERVER MUST BE DESIGNATED BY THE ENGINEER OR ARCHITECT OF RECORD.
THE REPLACEMENT STRUCTURAL OBSERVER SHALL APPROVE THE CORRECTION OF THE ORIGINAL OBSERVED DEFICIENCIES UNLESS OTHERWISE APPROVED BY PLAN CHECK SUPERVISION. THE POLICY OF THE DEPARTMENT SHALL BE TO CORRECT ANY PROPERLY NOTED DEFICIENCIES WITHOUT CONSIDERATION OF THEIR SOURCE.

(10) THE ENGINEER OR ARCHITECT OF RECORD SHALL DEVELOP ALL CHANGES RELATING TO THE STRUCTURAL SYSTEMS. THE BUILDING DEPARTMENT SHALL REVIEW AND APPROVE ALL CHANGES TO THE APPROVED PLANS AND SPECIFICATIONS.

STRUCTURAL OBSERVATION IS REQUIRED PER IBC SECTION 1704.6.1 FOR SEISMIC RESISTANCE.
IN THE DIRECTION PERPENDICULAR TO THE BUILDING RIDGE THE LATERAL FORCE RESISTING SYSTEM IS THE 3 PIN ARCHES. IN THE DIRECTION PARALLEL TO THE RIDGE THE LATERAL FORCE RESISTING SYSTEM IS THE HORIZONTAL SPREADERS AND THE THREE BAYS OF 5X6 ARCH, 5X6 COLUMNS AND 5/8" DIAMETER STEEL CROSS BRACING.

SPECIAL INSPECTION

SEE FOUNDATION ENGINEER'S DRAWINGS FOR ADDITIONAL SPECIAL INSPECTION REQUIREMENTS NOT STATED HERE.

THIS BUILDING INCORPORATES STRUCTURAL BOLTS AND POST-INSTALLED ANCHORS WHICH MAY REQUIRE SPECIAL INSPECTION UNDER THE BUILDING CODE. PER THE BUILDING CODE, SPECIAL INSPECTION IF REQUIRED, IS THE RESPONSIBILITY OF THE OWNER OR THE REGISTERED DESIGN PROFESSIONAL IN RESPONSIBLE CHARGE ACTING AS THE OWNERS AGENT.

STATEMENT OF SPECIAL INSPECTION

HIGH STRENGTH BOLTING TO A SNUG TIGHT CONDITION: PERIODIC

INSTALLATION OF ADHESIVE ANCHORS: PERIODIC SPECIAL INSPECTION IS REQUIRED AND SHALL CONFORM TO THE REQUIREMENTS OF ESR-3187, SECTION 4.4.

WELDED STEEL CONNECTIONS: SPECIAL INSPECTION IS NOT REQUIRED SINCE THESE COMPONENTS SHALL BE FABRICATED IN A CERTIFIED FABRICATION SHOP.

DRAWING INDEX

SIGNATURE SERIES

sprung STRUCTURES
TOLL FREE: 1-800-528-9899
(403) 601-2292 www.sprung.com

canyons STRUCTURAL CONSULTING
1245 E. BRICKYARD ROAD, SUITE 200
SALT LAKE CITY, UTAH
PH. (801) 486.6848
info@canyonsstructural.com
www.canyonsstructural.com

PROFESSIONAL STRUCTURAL ENGINEER
CAMERIA M. FLOWERS
No. 353834
09/30/2025
STATE OF UTAH

RPE22 MAYFLOWER CONDOMINIUMS LLC.
60' - 0" x 90' - 0"
WAREHOUSE
PARK CITY, UTAH, UNITED STATES

REV.	MM/DD/YY	BY	DESCRIPTION
2	09/19/25	EH	UPDATE DRAWING INDEX
3			
4			
5			
6			
7			
8			
9			

TITLE SHEET

DATE: 07/30/2025 DRAWN BY: --

R25-TITLE.0

SPRUNG WO #28455

CB = CABLE BRACING

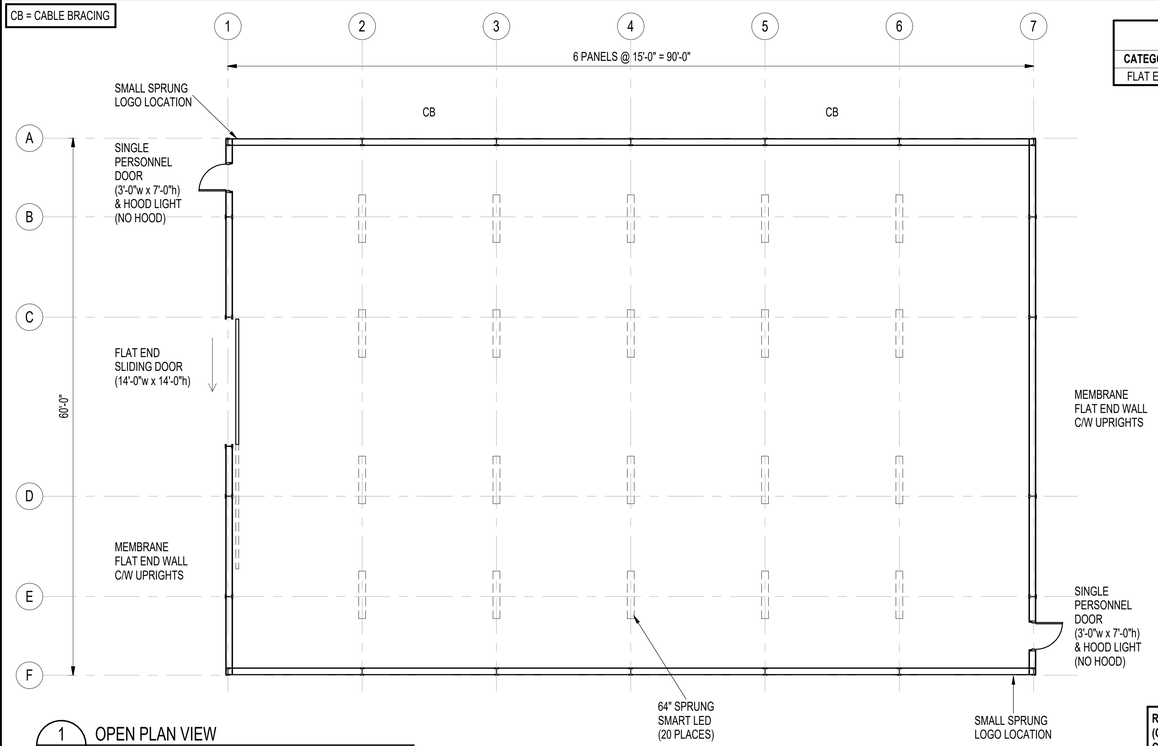

1 / 413.0 OPEN PLAN VIEW
1/8" = 1'-0"

PERSONNEL DOORS							
CATEGORY	TYPE	HOOD WIDTH	BEAM	DOOR SIZE	COMMENT	SWING	COUNT
FLAT END	SPD			3'-0"w x 7'-0"h		STANDARD	2

ACCESSORIES				
CATEGORY	TYPE	SIZE	COMMENT	COUNT
CARGO DOOR	FLAT END SLIDING DOOR	14'-0"w x 14'-0"h	EXTERIOR MOUNT	1
LIGHTING	HOOD LIGHT		LED	2
LIGHTING	SPRUNG SMART LED		64"	20

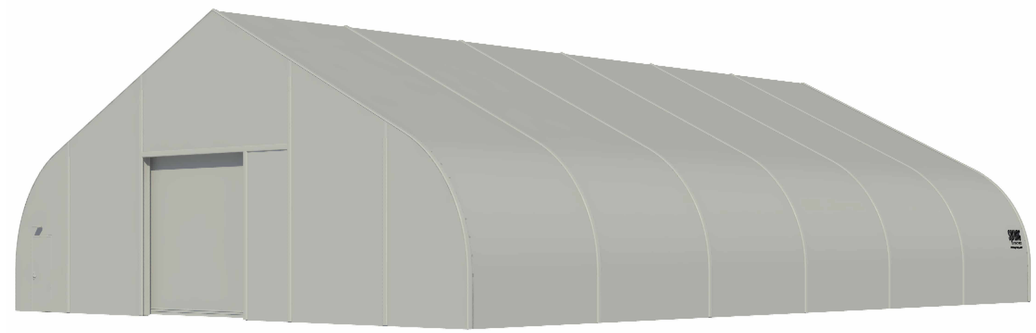

4 / 413.0 EXTERIOR VIEW

REFER TO DWG R25-413.1 (COLUMN BASE LAYOUT) FOR CONCRETE PAD DIMENSIONS

REFER TO GENERAL NOTES ON TITLESHEET FOR SPECIAL INSPECTION & ADDITIONAL MATERIAL NOTES.

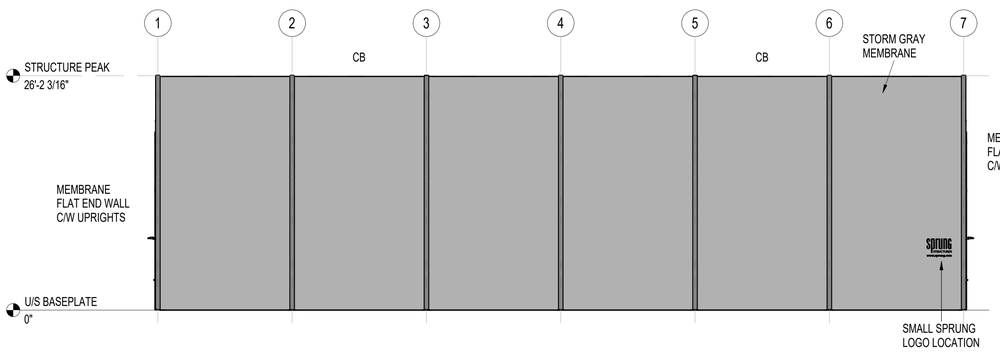

2 / 413.0 FRONT ELEVATION
1/8" = 1'-0"

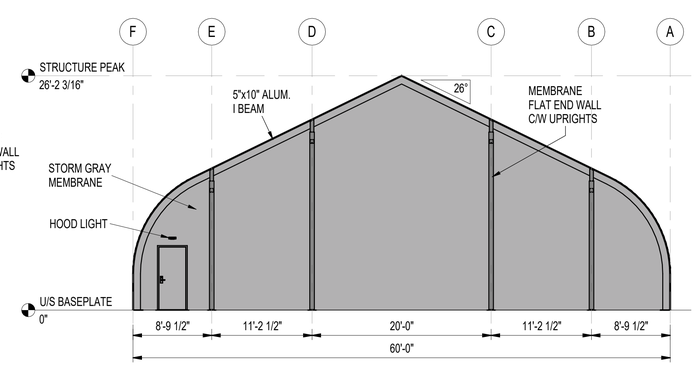

5 / 413.0 RIGHT ELEVATION
1/8" = 1'-0"

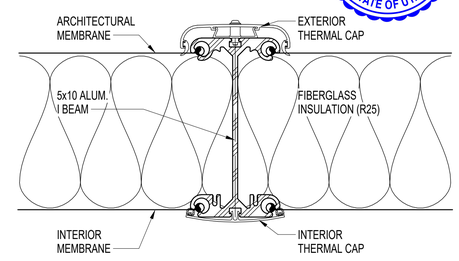

7 / 413.0 5x10 INSULATED BEAM SECTION
3" = 1'-0"

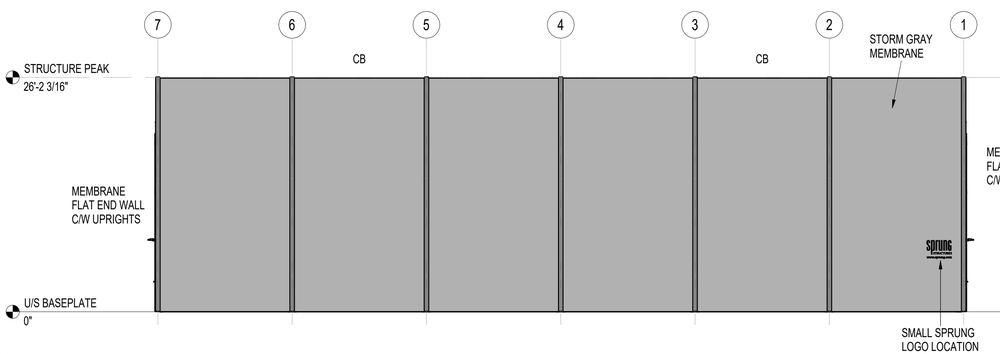

3 / 413.0 REAR ELEVATION
1/8" = 1'-0"

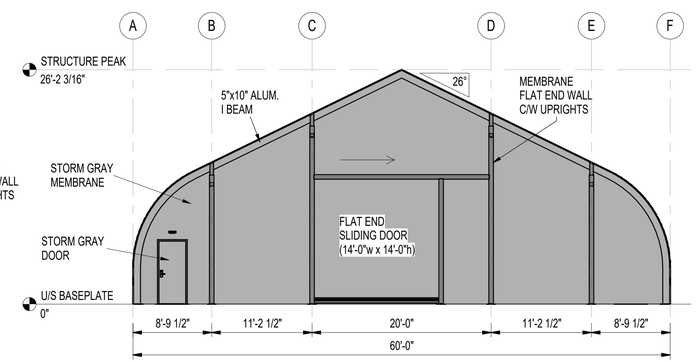

6 / 413.0 LEFT ELEVATION
1/8" = 1'-0"

COLORS ON THESE ELEVATIONS MAY VARY SIGNIFICANTLY DEPENDING ON PRINTER OR MONITOR. PLEASE REFER TO MEMBRANE SAMPLES FOR ACTUAL COLORS.

SIGNATURE SERIES

sprung STRUCTURES
TOLL FREE: 1-800-528-9899
(403) 601-2292 www.sprung.com

GENERAL NOTES:

1. ALL PERSONNEL DOORS C/W PANIC HARDWARE & HOODS, AS NOTED.
2. STRUCTURE TO BE INSULATED WITH FIBERGLASS BATT INSULATION C/W INNER LINER, TO PEAK.
3. STRUCTURE MEMBRANE MEETS: NFPA 701, CALIFORNIA STATE FIRE MARSHAL, ASTM E84, CAN/ULC-S-109 & CAN/ULC-S-102 SPECIFICATIONS.
4. THIS STRUCTURE IS DESIGNED TO SHED/RELEASE SNOW. THE PERIMETER OF THE STRUCTURE SHALL BE KEPT CLEAR.
5. WHEN DESIGNING A HEATING, VENTILATION OR AIR CONDITIONING SYSTEM FOR ANY TYPE OF BUILDING, IT IS IMPORTANT TO ENSURE THAT THIS SYSTEM INTAKES MORE AIR THAN IS BEING EXHAUSTED AT ANY GIVEN TIME. THIS PROCESS WILL RESULT IN A POSITIVE PRESSURE BEING MAINTAINED. CONVERSELY, IF NEGATIVE PRESSURE EXISTS WITHIN THE STRUCTURE, IT WILL BE DIFFICULT TO OPEN DOORS AND MOISTURE WILL BE DRAWN INTO THE STRUCTURE.
6. ALL INTERIOR WALLS & PARTITIONS (IF APPLICABLE) TO BE FREE STANDING & INDEPENDENT OF SPRUNG STRUCTURE.
7. STRUCTURE IS DESIGNED TO SUPPORT AN EQUALLY DISTRIBUTED & BALANCED UTILITY LOAD OF 2 PSF (0.1 kPa). THIS MAY BE COMPRISED OF, BUT NOT LIMITED TO, ITEMS SUCH AS SPRINKLER LINES, HVAC DUCTS, ELECTRICAL, LIGHTING, FANS, CEILING GRIDS, AUDIO-VISUAL EQUIPMENT, ETC.. SEE UTILITY LOAD LETTER FOR MORE INFORMATION.

PROFESSIONAL STRUCTURAL ENGINEER
CAMERIA M. FLOWERS
No. 353834
09/26/2025
STATE OF UTAH

canyons STRUCTURAL CONSULTING
1245 E. BRICKYARD ROAD, SUITE 200
SALT LAKE CITY, UTAH
PH. (801) 486.6848
info@canyonsstructural.com
www.canyonsstructural.com

DESIGN LOADS

LOCATION:	PARK CITY, UT
BUILDING CODE:	IBC 2021
WIND SPEED:	103 MPH 3 SEC GUST
RISK CATEGORY: II	EXPOSURE: C
GROUND SNOW LOAD:	88 PSF
(SEE SNOW SHED REPORT)	

RPE22 MAYFLOWER CONDOMINIUMS LLC.
60' - 0" x 90' - 0" WAREHOUSE
PARK CITY, UTAH, UNITED STATES

REV.	MM/DD/YY	BY	DESCRIPTION
2	06/16/25	DH	REVISE LENGTH & COLOR
3	07/24/25	SB	REV. LIGHTS & SNOW LOAD
4	07/29/25	DH	REVISE CUSTOMER NAME
5	08/05/25	EH	UPDATE LOCATION
6	09/19/25	PD	REVISE FOUNDATION
7			
8			
9			

FLOOR PLAN & ELEVATIONS

DATE: 05/12/2025 | DRAWN BY: B. PHILIPOFF

R25-413.0

SPRUNG WO #28455

I:\2025 Drawings\Full Sets\R25-4400\R25-413-R6.rvt
2025-09-26 4:35:37 PM

DIMENSIONS ARE SHOWN TO CONCRETE CORNER WORK POINTS (WP)

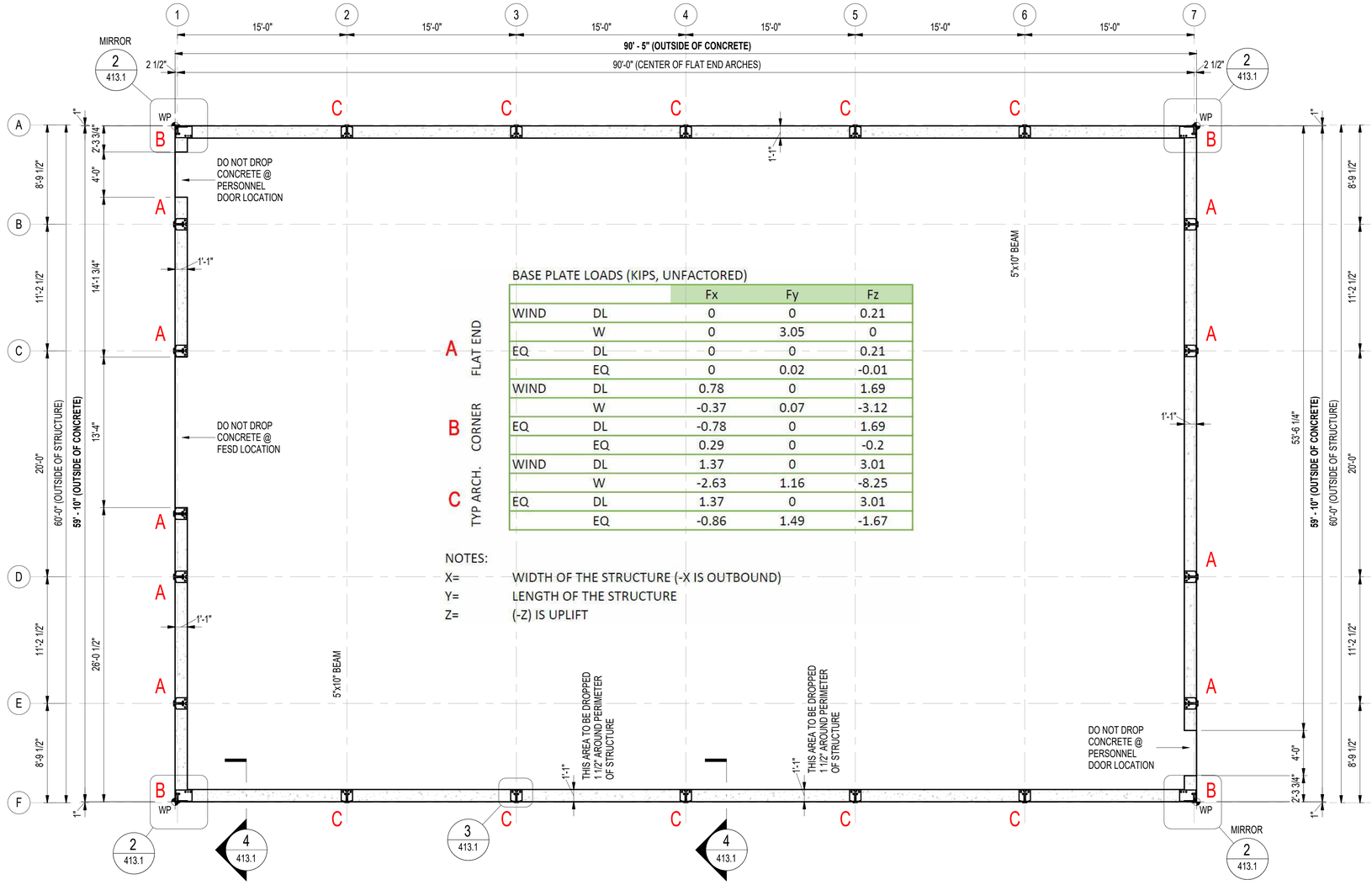

1 413.1 COLUMN BASE LAYOUT
3/16" = 1'-0"

BASE PLATE LOADS (KIPS, UNFACTORED)

			Fx	Fy	Fz
A FLAT END	WIND	DL	0	0	0.21
		W	0	3.05	0
	EQ	DL	0	0	0.21
		EQ	0	0.02	-0.01
B CORNER	WIND	DL	0.78	0	1.69
		W	-0.37	0.07	-3.12
	EQ	DL	-0.78	0	1.69
		EQ	0.29	0	-0.2
C TYP ARCH.	WIND	DL	1.37	0	3.01
		W	-2.63	1.16	-8.25
	EQ	DL	1.37	0	3.01
		EQ	-0.86	1.49	-1.67

NOTES:
X= WIDTH OF THE STRUCTURE (-X IS OUTBOUND)
Y= LENGTH OF THE STRUCTURE
Z= (-Z) IS UPLIFT

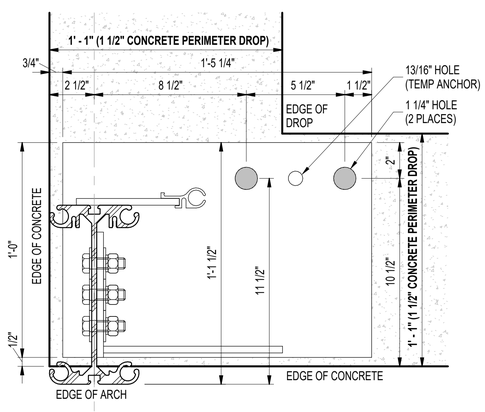

2 413.1 5"x10" CORNER BASE PLATE CONC (INS) - PLAN
3" = 1'-0" FLAT END ARCH

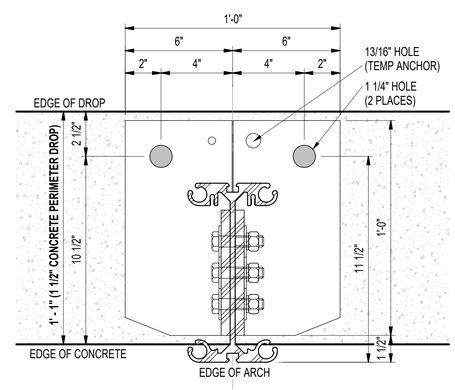

3 413.1 5"x10" BASE PLATE CONC - PLAN
3" = 1'-0" CENTER PANELS & UPRIGHTS

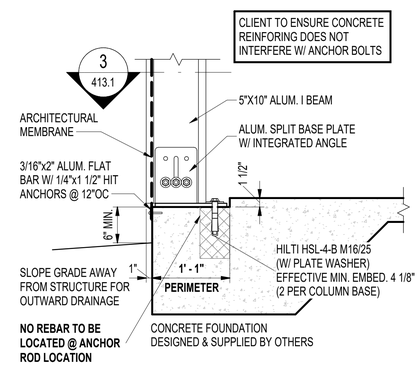

4 413.1 5"x10" BASE PLATE CONC - SECTION
1" = 1'-0"

SIGNATURE SERIES

sprung STRUCTURES

TOLL FREE: 1-800-528-9899
(403) 601-2292 www.sprung.com

CONCRETE GENERAL NOTES:

1. MIN. 4000psi (27.5 MPa) CONCRETE.
2. OUTER MEMBRANE TO BE FINISHED TO CONCRETE USING ALUM. FLAT BAR
3. EXPOSED CONCRETE TO BE FINISHED ACCORDINGLY.
4. CLIENT TO ENSURE CONCRETE REINFORCING DOES NOT INTERFERE WITH ANCHOR BOLTS.
5. THIS DRAWING AND THE ASSOCIATED DETAILS ARE NOT A FOUNDATION DESIGN. THIS DRAWING IS PROVIDED AS A SERVICE TO THE OWNER AND THE OWNER'S FOUNDATION ENGINEER TO SHOW CONCRETE LIMITS AND DETAILS REQUIRED FOR THE ERECTION AND INSTALLATION OF THE SPRUNG STRUCTURE.
6. REFER TO DESIGN NOTES FOR ASSUMPTIONS USED IN THE DESIGN OF THE POST-INSTALLED ANCHORS.
7. ASSUMPTIONS USED IN THE DESIGN OF THE POST-INSTALLED ANCHORS DO NOT CONTROL OVER THE DESIGN BY THE FOUNDATION ENGINEER. IT IS CONTINGENT ON THE FOUNDATION ENGINEER TO DESIGN FOR DEVELOPMENT OF THE POST-INSTALLED ANCHORS TO CONFORM TO THE BUILDING CODE AND THE REQUIREMENTS OF THE SPRUNG STRUCTURE DESIGN.

PROFESSIONAL STRUCTURAL ENGINEER
CAMBRIA M. FLOWERS
No. 353834
09/26/2025
STATE OF UTAH

canyons STRUCTURAL CONSULTING

1245 E. BRICKYARD ROAD, SUITE 200
SALT LAKE CITY, UTAH
PH. (801) 486.6848
info@canyonsstructural.com
www.canyonsstructural.com

RPE22 MAYFLOWER CONDOMINIUMS LLC.
60' - 0" x 90' - 0" WAREHOUSE
PARK CITY, UTAH, UNITED STATES

REV.	MM/DD/YY	BY	DESCRIPTION
2	06/16/25	DH	REVISE LENGTH & COLOR
3	07/24/25	SB	REV. LIGHTS & SNOW LOAD
4	07/29/25	DH	REVISE CUSTOMER NAME
5	08/05/25	EH	UPDATE LOCATION
6	09/19/25	PD	REVISE FOUNDATION
7			
8			
9			

COLUMN BASE LAYOUT

DATE: 05/12/2025 DRAWN BY: B. PHILIPOFF

R25-413.1

SPRUNG WO #28455

I:\2025\3 Drawings\Full Size\R25-400\R25-413-R6.rvt
25-09-26 2:45:00 PM

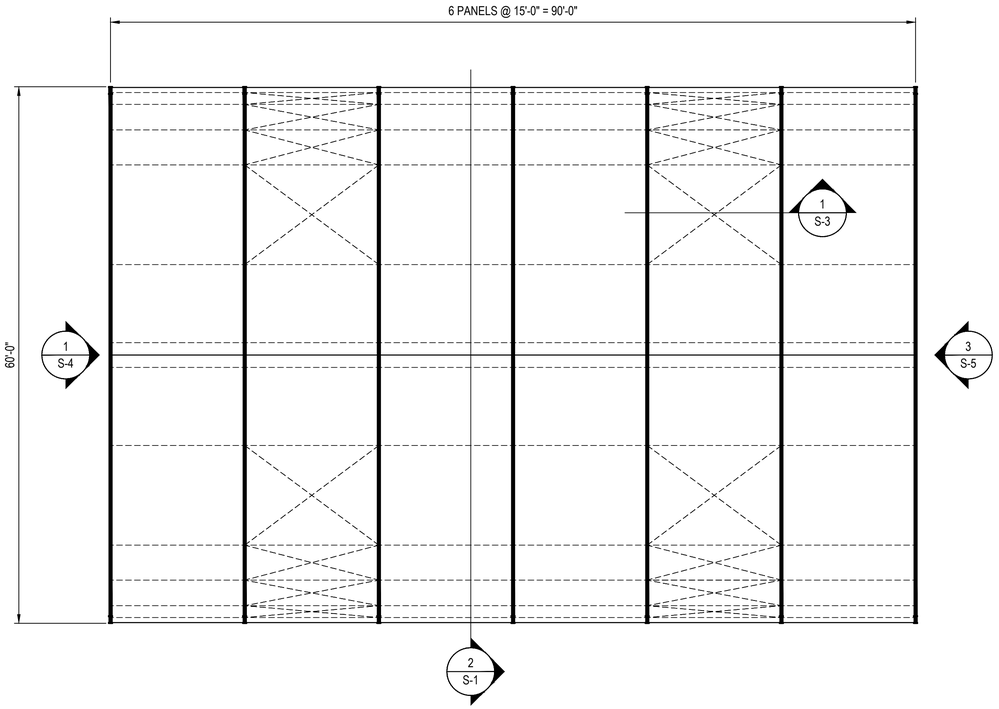

1 S-1 PLAN VIEW
1/8"=1'-0"

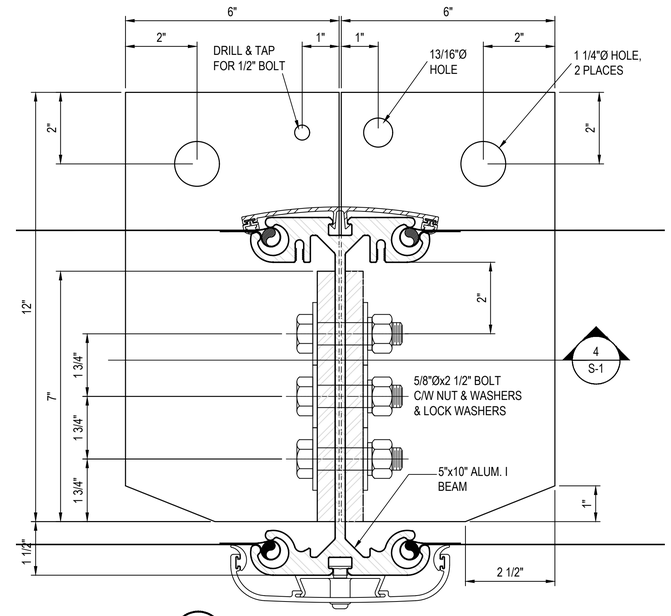

3 S-1 5"x10" BEAM BASE PLATE - PLAN
6"=1'-0"

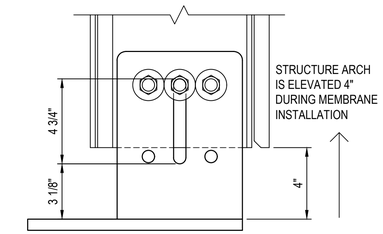

5 S-1 5"x10" BEAM BASE PLATE - ELEVATION
3"=1'-0" (ERECTION CONDITION)

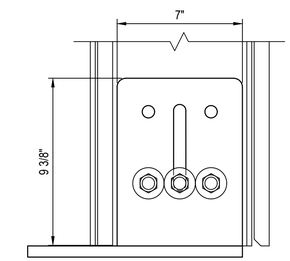

6 S-1 5"x10" BEAM BASE PLATE - ELEVATION
3"=1'-0" (FINAL CONDITION)

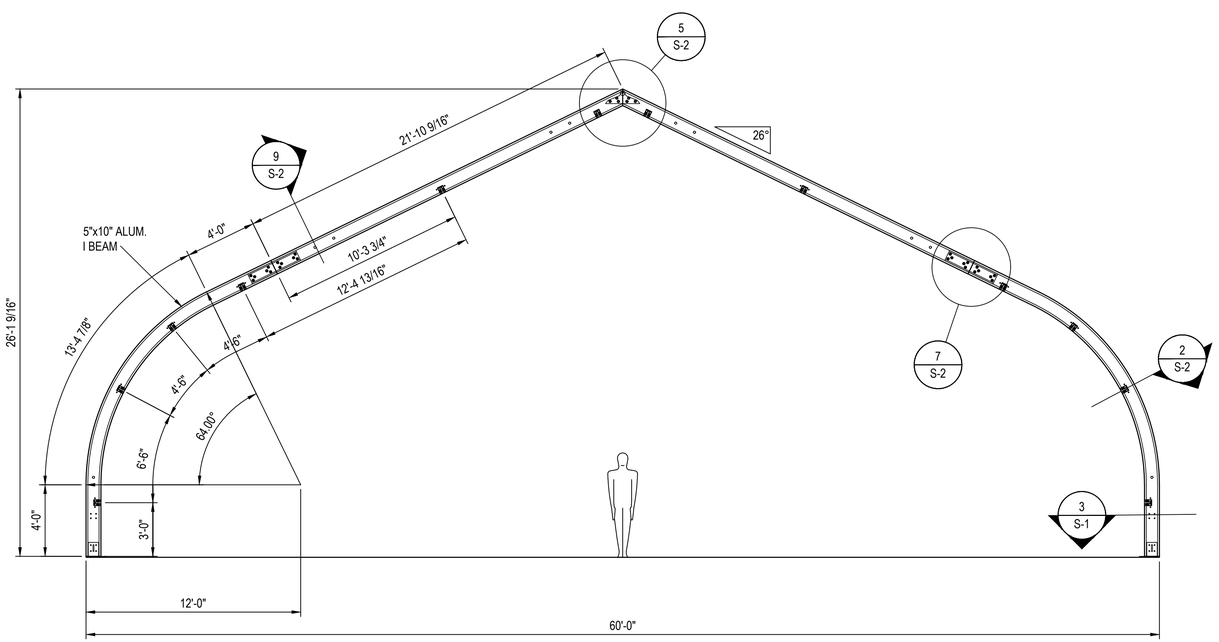

2 S-1 SECTION 60'-0" INSULATED STRUCTURE
1/4"=1'-0"

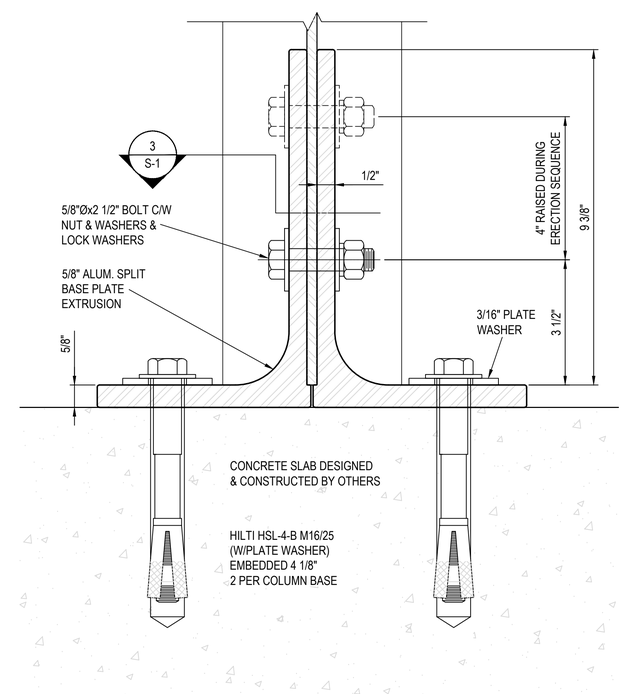

4 S-1 5"x10" BEAM BASE PLATE - SECTION
6"=1'-0"

SIGNATURE SERIES

sprung STRUCTURES
TOLL FREE: 1-800-528-9899
(403) 601-2292 www.sprung.com

BUILDING MATERIALS:

STRUCTURAL BOLTS:
ALL STRUCTURAL BOLTS SHALL BE SAE GRADE 8 ZINC-DICHROMATE PLATED, WITH Fu=113 ksi. BOLTS ARE ASTM A325 COMPLIANT.
ALL STRUCTURAL BOLTS SHALL BE TIGHTENED TO A SNUG TIGHT CONDITION; I.E., ALL PLIES SHALL BE BROUGHT INTO FIRM CONTACT WITH A FEW IMPACTS OF AN IMPACT WRENCH OR THE FULL EFFORT OF A MAN WITH A SPUD WRENCH.

ANCHOR BOLTS:
ANCHOR BOLTS SHALL NOT BE CAST-IN-PLACE. THE DEVELOPMENT OF THE POST-INSTALLED ANCHORS INTO THE CONCRETE FOUNDATION IS THE RESPONSIBILITY OF THE OWNER OR THE OWNER'S REGISTERED FOUNDATION ENGINEER.

ALUMINUM: 6351-T6, DESIGN AND FABRICATION SHALL BE PER THE ALUMINUM DESIGN MANUAL.

STEEL: 300W CSA, G40.21, FY=44 KSI, ALL STEEL IN CONTACT WITH ALUMINUM SHALL BE HOT DIP GALVANIZED. DESIGN AND FABRICATION OF STRUCTURAL STEEL SHALL BE IN CONFORMANCE WITH AISC 360-16 & ASTM A572 GRADE 42 COMPLIANT.

STEEL WIRE ROPE: 6X19+ IWRC, 26,600 LBS MINIMUM BREAKING STRENGTH.

SPECIAL INSPECTION:
THIS BUILDING INCORPORATES STRUCTURAL BOLTS AND POST-INSTALLED ANCHORS WHICH MAY REQUIRE SPECIAL INSPECTION UNDER THE BUILDING CODE. PER THE BUILDING CODE, SPECIAL INSPECTION, IF REQUIRED, IS THE RESPONSIBILITY OF THE OWNER OR THE REGISTERED DESIGN PROFESSIONAL IN RESPONSIBLE CHARGE ACTING AS THE OWNER'S AGENT.

PROFESSIONAL STRUCTURAL ENGINEER
CAMERIA M. FLOWERS
No. 353834
09/26/2025
STATE OF UTAH

canyons STRUCTURAL CONSULTING
1245 E. BRICKYARD ROAD, SUITE 200
SALT LAKE CITY, UTAH
PH. (801) 486.6848
FIRM #: F-21890
info@canyonsstructural.com
www.canyonsstructural.com

RPE22 MAYFLOWER CONDOMINIUMS LLC.

60'-0" x 90'-0"
WAREHOUSE
PARK CITY, UTAH, UNITED STATES

REV.	MM/DD/YY	BY	DESCRIPTION
2	09/18/25	EH	REVISE TO CONCRETE FOUNDATION
3			
4			
5			
6			
7			
8			
9			

SECTION & BASE DETAILS

DATE: 08/07/2025
DRAWN BY: D. BENNETT

S-1

SPRUNG WO# 28606

PROJECT FILENAME:C:\Users\DENNETT\Desktop\SPRUNG CONTRACTOR BUILDING PLANS\RPE22 MAYFLOWER - ASSEMBLIES.DWG
9/26/2025 1:39:27 PM

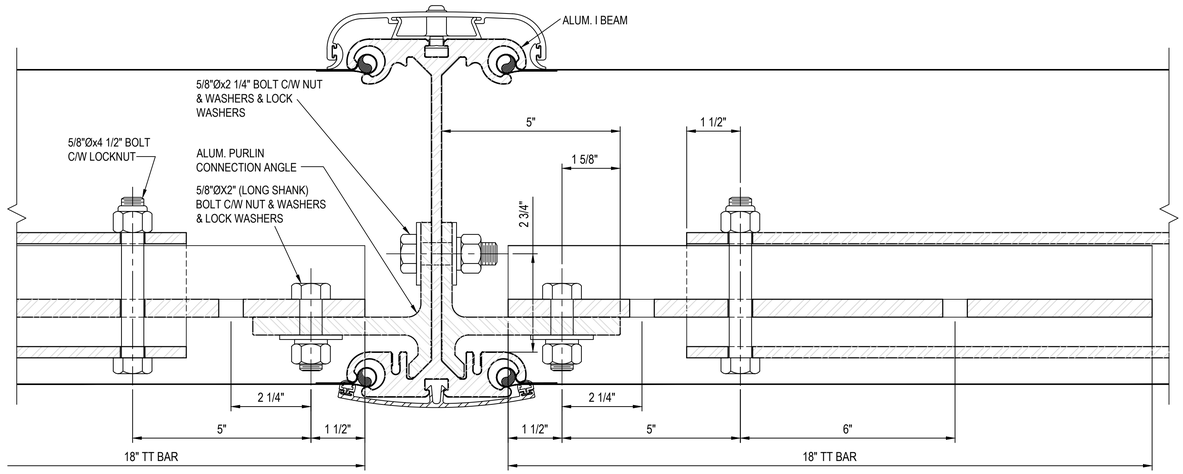

1 S-2 5"x10" PURLIN - ELEVATION
6"=1'-0" (ERECTION CONDITION)

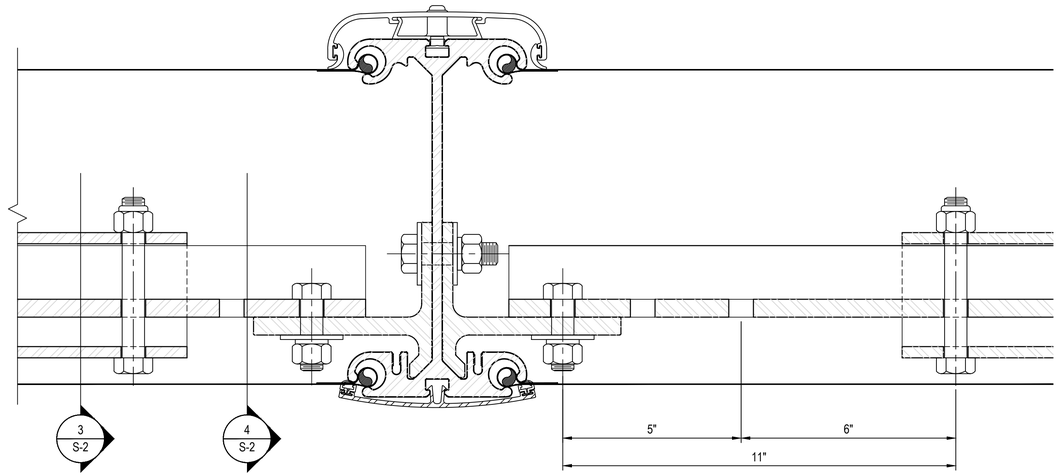

2 S-2 5"x10" PURLIN - ELEVATION
6"=1'-0" (FINAL CONDITION)

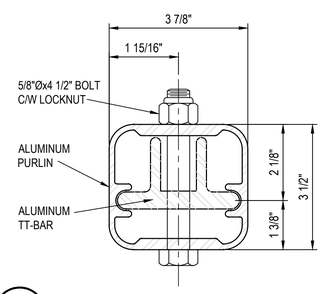

3 S-2 5"x10" PURLIN - SECTION
6"=1'-0"

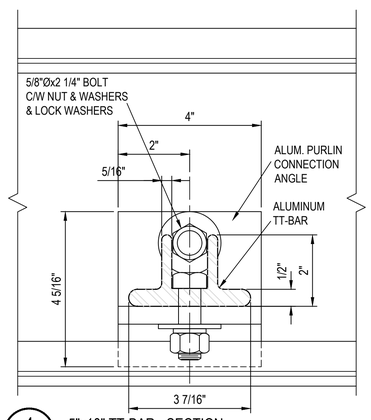

4 S-2 5"x10" TT-BAR - SECTION
6"=1'-0"

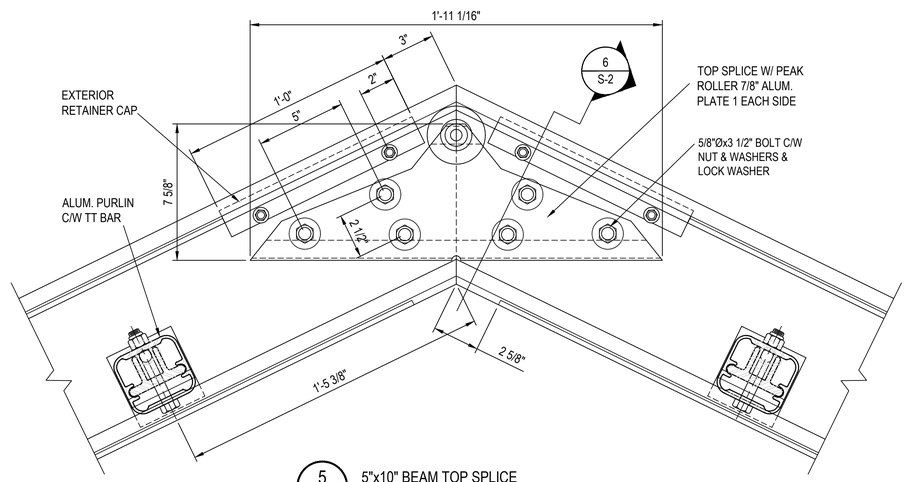

5 S-2 5"x10" BEAM TOP SPLICE
3"=1'-0"

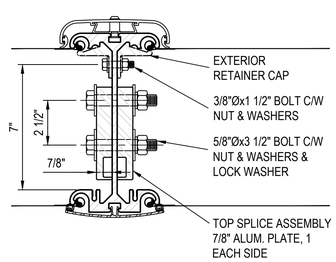

6 S-2 5"x10" TOP SPLICE - SECTION
3"=1'-0"

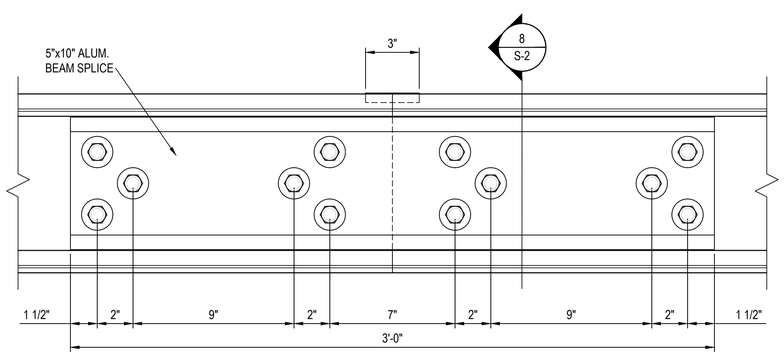

7 S-2 5"x10" BEAM SPLICE
3"=1'-0"

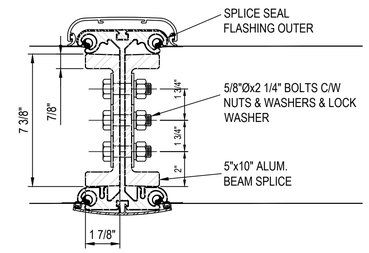

8 S-2 5"x10" BEAM SPLICE - SECTION
3"=1'-0"

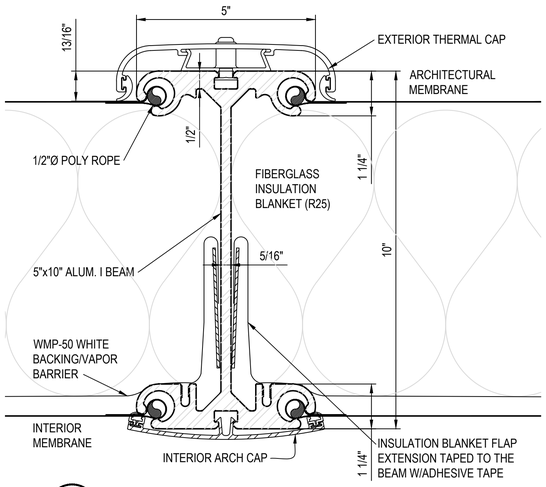

9 S-2 5"x10" INSULATED BEAM SECTION
6"=1'-0"

SIGNATURE SERIES

sprung STRUCTURES
TOLL FREE: 1-800-528-9899
(403) 601-2292 www.sprung.com

PROFESSIONAL STRUCTURAL ENGINEER
CAMERIA M. FLOWERS
No. 353834
09/09/2025
STATE OF UTAH

canyons STRUCTURAL CONSULTING
1245 E. BRICKYARD ROAD, SUITE 200
SALT LAKE CITY, UTAH
PH. (801) 486.6848
FIRM #: F-21890
info@canyonsstructural.com
www.canyonsstructural.com

RPE22 MAYFLOWER CONDOMINIUMS LLC.

60'-0" x 90'-0"
WAREHOUSE
PARK CITY, UTAH, UNITED STATES

REV.	MM/DD/YY	BY	DESCRIPTION
2	09/18/25	EH	REVISE TO CONCRETE FOUNDATION
3			
4			
5			
6			
7			
8			
9			

PURLIN & SPLICE DETAILS

DATE: 08/07/2025
DRAWN BY: D. BENNETT

S-2

SPRUNG WO# 28606

PROJECTS 2025\RPE22 MAYFLOWER CONDOMINIUMS LLC\PARK CITY\CANYONS STRUCTURAL\DWG\RPE22 MAYFLOWER - ASSEMBLIES.DWG
9/30/2025 1:38:21 PM

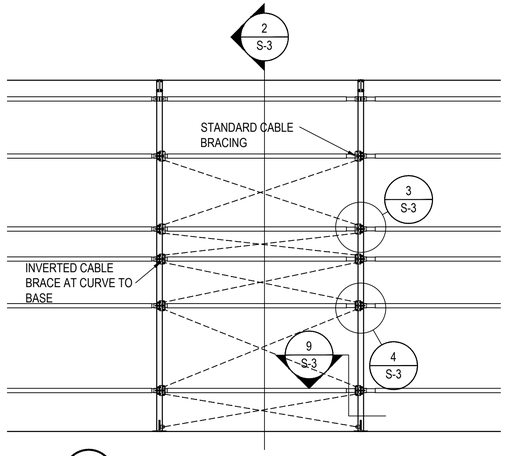

1 S-3 60'-0" PARTIAL CABLE BRACING - ELEVATION
3/16"=1'-0"

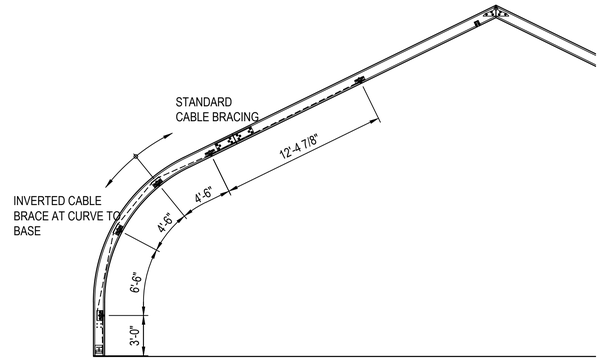

2 S-3 60'-0" PARTIAL CABLE BRACING - SECTION
3/16"=1'-0"

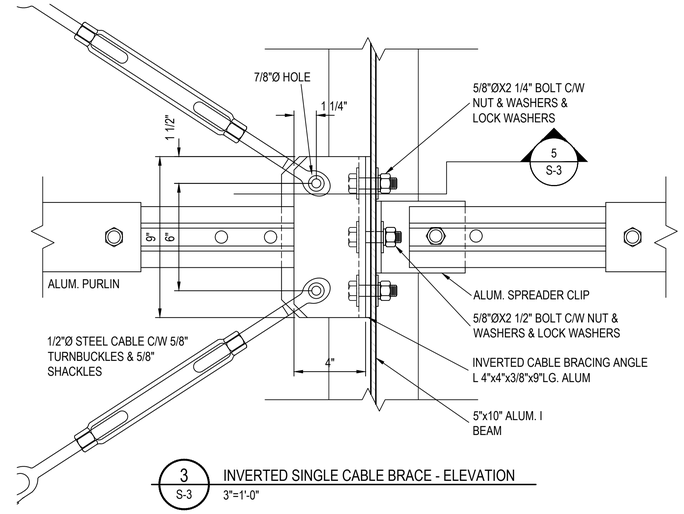

3 S-3 INVERTED SINGLE CABLE BRACE - ELEVATION
3"=1'-0"

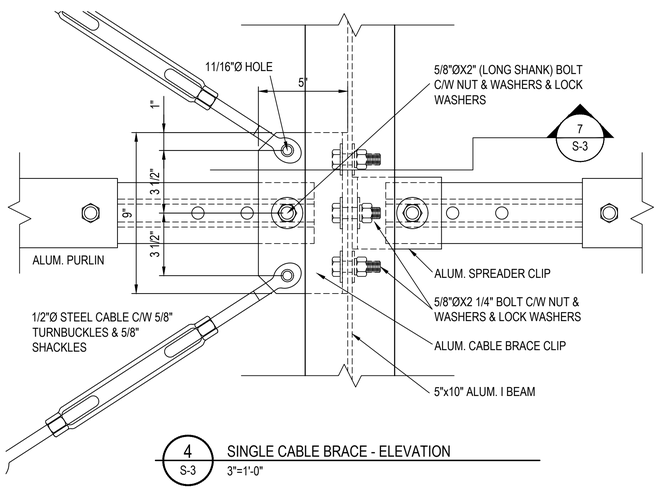

4 S-3 SINGLE CABLE BRACE - ELEVATION
3"=1'-0"

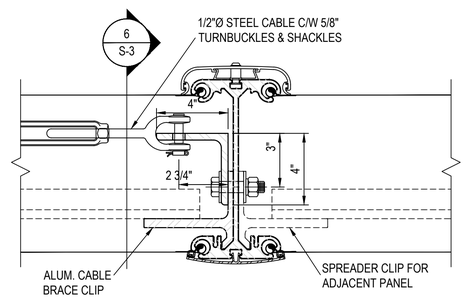

5 S-3 INVERTED CABLE BRACE SECTION
3"=1'-0"

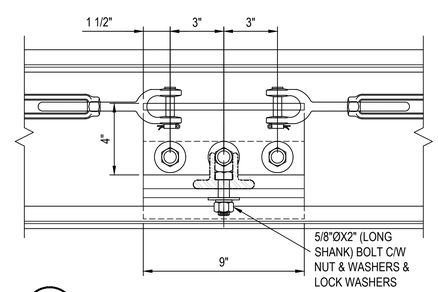

6 S-3 INVERTED CABLE BRACE BRACKET ELEVATION
3"=1'-0"

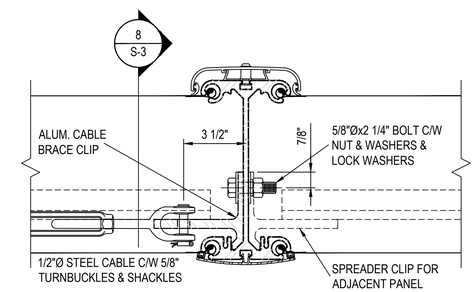

7 S-3 SINGLE CABLE BRACE SECTION
3"=1'-0"

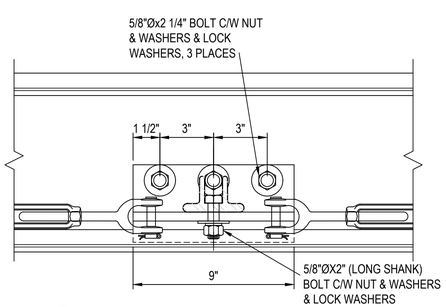

8 S-3 CABLE BRACE BRACKET ELEVATION
3"=1'-0"

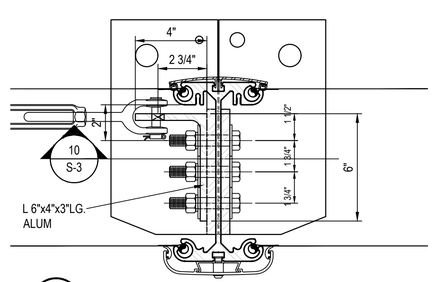

9 S-3 5"x10" CABLE PLATE - PLAN
3"=1'-0"

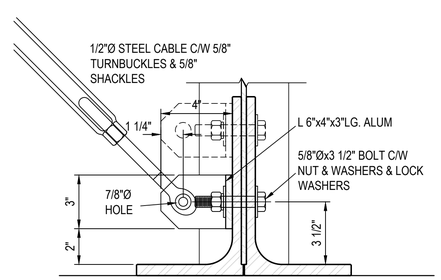

10 S-3 5"x10" CABLE PLATE - ELEVATION
3"=1'-0"

SIGNATURE SERIES

sprung STRUCTURES
TOLL FREE: 1-800-528-9899
(403) 601-2292 www.sprung.com

canyons STRUCTURAL CONSULTING
1245 E. BRICKYARD ROAD, SUITE 200
SALT LAKE CITY, UTAH
PH. (801) 486.6848
FIRM #: F-21890
info@canyonsstructural.com
www.canyonsstructural.com

RPE22 MAYFLOWER CONDOMINIUMS LLC.

60'-0" x 90'-0"

WAREHOUSE

PARK CITY, UTAH, UNITED STATES

REV.	MM/DD/YY	BY	DESCRIPTION
2	09/18/25	EH	REVISE TO CONCRETE FOUNDATION
3			
4			
5			
6			
7			
8			
9			

CABLE BRACE DETAILS

DATE: 08/07/2025

DRAWN BY: D. BENNETT

S-3

SPRUNG WO# 28606

T:\PROJECTS\RPE22 MAYFLOWER CONDOMINIUMS LLC\SPRUNG\CAD\RPE22 MAYFLOWER CONDOMINIUMS LLC.DWG 8.5 LANDSCAPE 8.5 LANDSCAPE\S-3 CABLE BRACE DETAILS.DWG
9/26/2025 1:38:27 PM

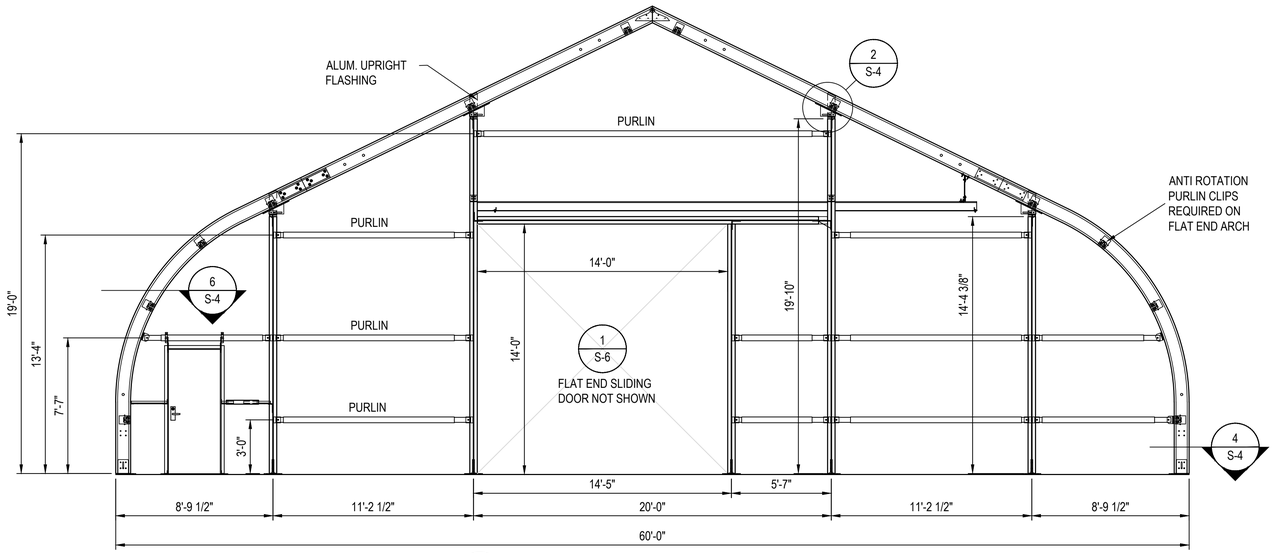

1 S-4 LEFT FLAT END 60'-0" INSULATED STRUCTURE
1/4"=1'-0"

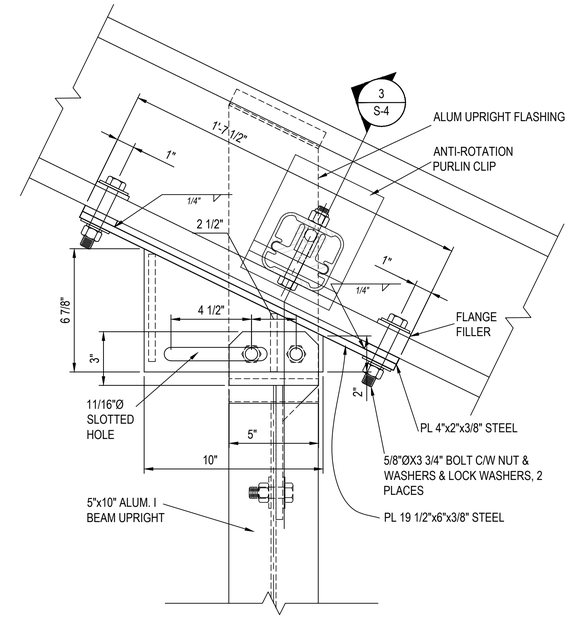

2 S-4 FLAT END UPRIGHT BRACKET - ELEV.
3"=1'-0"

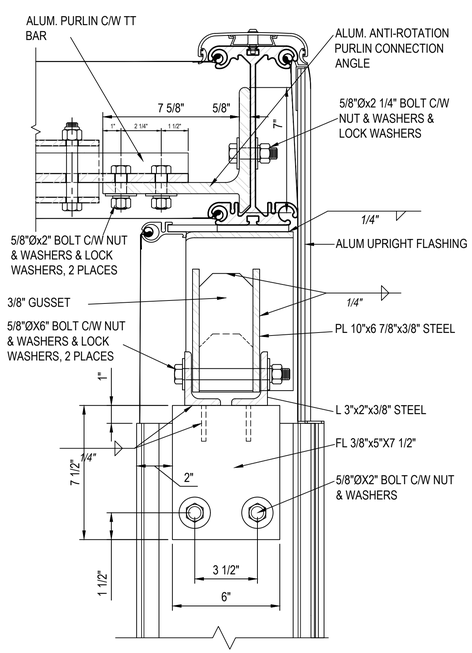

3 S-4 FLAT END UPRIGHT BRACKET - SECTION
3"=1'-0"

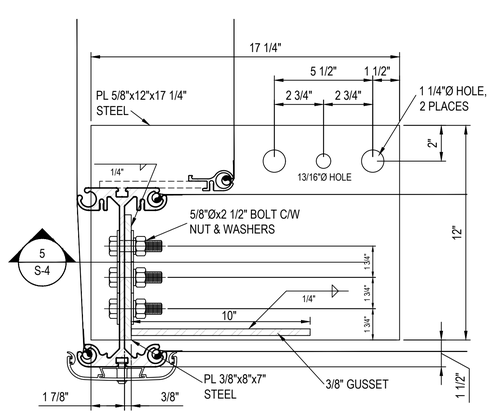

4 S-4 5"x10" INS. CORNER BASE PLATE - PLAN
3"=1'-0"

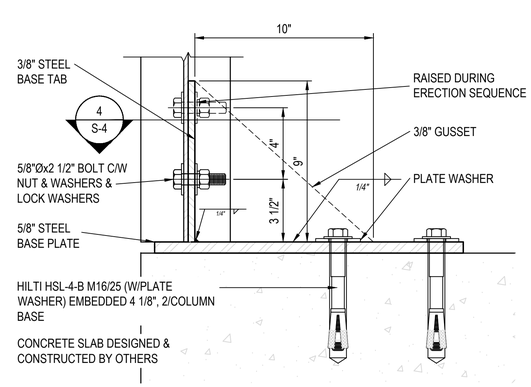

5 S-4 5"x10" CORNER BASE PLATE - SECTION
3"=1'-0"

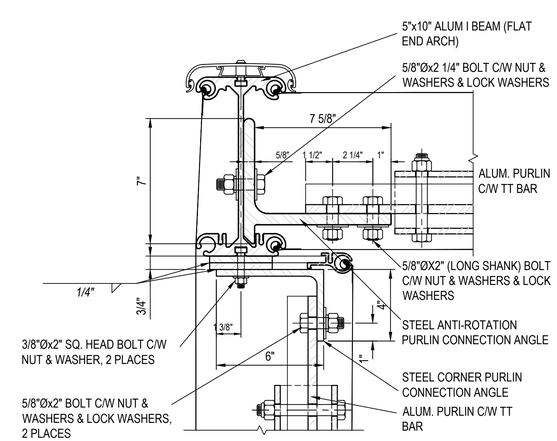

6 S-4 5"x10" INS CORNER PURLIN CONNECTION
3"=1'-0"

SIGNATURE SERIES

sprung STRUCTURES
TOLL FREE: 1-800-528-9899
(403) 601-2292 www.sprung.com

PROFESSIONAL STRUCTURAL ENGINEER
CAMERIA M. FLOWERS
No. 353634
09/26/2025
STATE OF UTAH

canyons STRUCTURAL CONSULTING
1245 E. BRICKYARD ROAD, SUITE 200
SALT LAKE CITY, UTAH
PH. (801) 486.6848
FIRM #: F-21890
info@canyonsstructural.com
www.canyonsstructural.com

RPE22 MAYFLOWER CONDOMINIUMS LLC.

60'-0" x 90'-0"

WAREHOUSE

PARK CITY, UTAH, UNITED STATES

REV.	MM/DD/YY	BY	DESCRIPTION
2	09/18/25	EH	REVISE TO CONCRETE FOUNDATION
3			
4			
5			
6			
7			
8			
9			

FLAT END DETAILS

DATE: 08/07/2025
DRAWN BY: D. BENNETT

S-4

SPRUNG WO# 28606

T:\PROJECTS\PROPERTIES\MAYFLOWER\DWG\MAYFLOWER CONDOS FOR BIDDING\S-4 FLAT END DETAILS.DWG 9/26/2025 1:38:27 PM

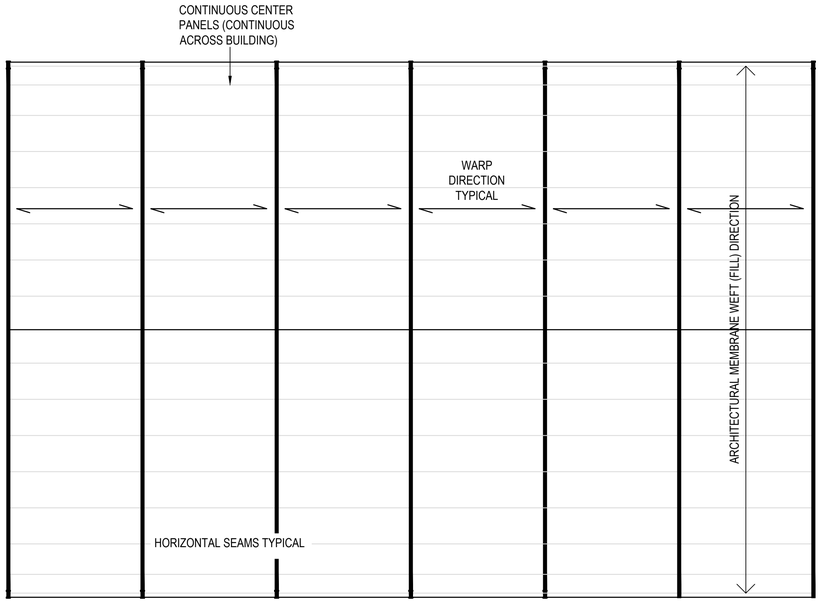

1 S-5 MEMBRANE LAYOUT
1/8"=1'-0"

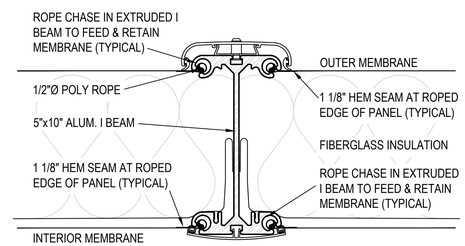

2 S-5 5"x10" BEAM SECTION - MEMBRANE
3"=1'-0"

NOTES:

OUTER MEMBRANE:
FERRARI FLEXLIGHT 942 OPAQUE PVFD
1. MEMBRANE STRENGTH:
WARP = 430 pli
FILL (WEFT) = 430 pli
2. PRESTRESS (COMPENSATION)
WARP = 1.1%
FILL (WEFT) = 0.5%
3. MEMBRANE - PVC COATED POLYESTER SCRIM

INNER MEMBRANE/LINER:
HERCULITE EXCEL 14 C/W POLYURETHANE TOP COAT
1. MEMBRANE STRENGTH:
WARP = 170 pli
FILL (WEFT) = 140 pli
2. PRESTRESS (COMPENSATION)
WARP = 1.0%
FILL (WEFT) = 0.5%
3. MEMBRANE - PVC COATED POLYESTER SCRIM

WARP DIRECTION IS THE SPAN DIRECTION FOR THE FABRIC FOR THIS STRUCTURE.
ALL HORIZONTAL SEAMS = 1 INCH

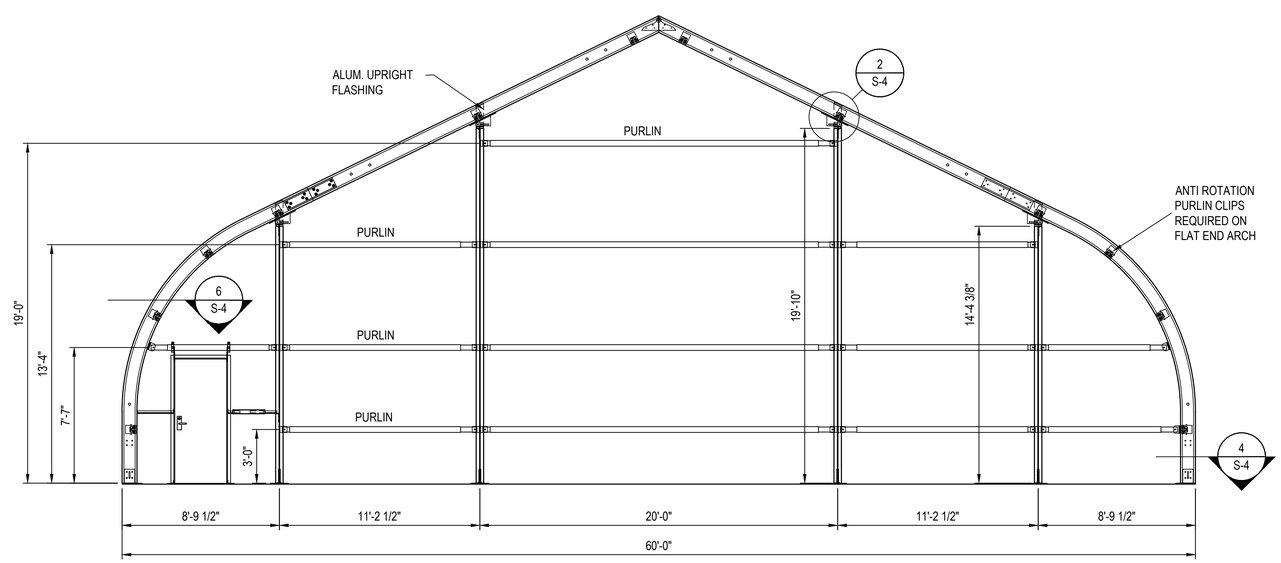

3 S-5 RIGHT FLAT END 60'-0" INSULATED STRUCTURE
1/4"=1'-0"

SIGNATURE SERIES

sprung STRUCTURES
TOLL FREE: 1-800-528-9899
(403) 601-2292 www.sprung.com

ARCHITECTURAL MEMBRANE

OUTER MEMBRANE:
FERRARI FLEXLIGHT 942 OPAQUE ARCHITECTURAL MEMBRANE W/PVDF TOP COAT. MEETS FIRE PROPAGATION CRITERIA OF:
- CALIFORNIA STATE FIRE MARSHALL
- NFPA 701
- ASTM-E-84
- CAN/ULC-S-109
- CAN/ULC-S-102

INNER MEMBRANE/LINER:
HERCULITE EXCEL 14 MEMBRANE W/POLYURETHANE TOP COAT. MEETS FIRE PROPAGATION CRITERIA OF:
- CALIFORNIA STATE FIRE MARSHALL
- NFPA 701
- ASTM-E-84
- CAN/ULC-S-109
- CAN/ULC-S-102

PROFESSIONAL STRUCTURAL ENGINEER
CAMERIA M. FLOWERS
No. 353834
09/26/2025
STATE OF UTAH

canyons STRUCTURAL CONSULTING
1245 E. BRICKYARD ROAD, SUITE 200
SALT LAKE CITY, UTAH
PH. (801) 486.6848
FIRM #: F-21890
info@canyonsstructural.com
www.canyonsstructural.com

RPE22 MAYFLOWER CONDOMINIUMS LLC.

60'-0" x 90'-0"
WAREHOUSE
PARK CITY, UTAH, UNITED STATES

REV.	MM/DD/YY	BY	DESCRIPTION
2	09/18/25	EH	REVISE TO CONCRETE FOUNDATION
3			
4			
5			
6			
7			
8			
9			

MEMBRANE DETAILS

DATE: 08/07/2025
DRAWN BY: D. BENNETT

S-5

SPRUNG WO# 28606

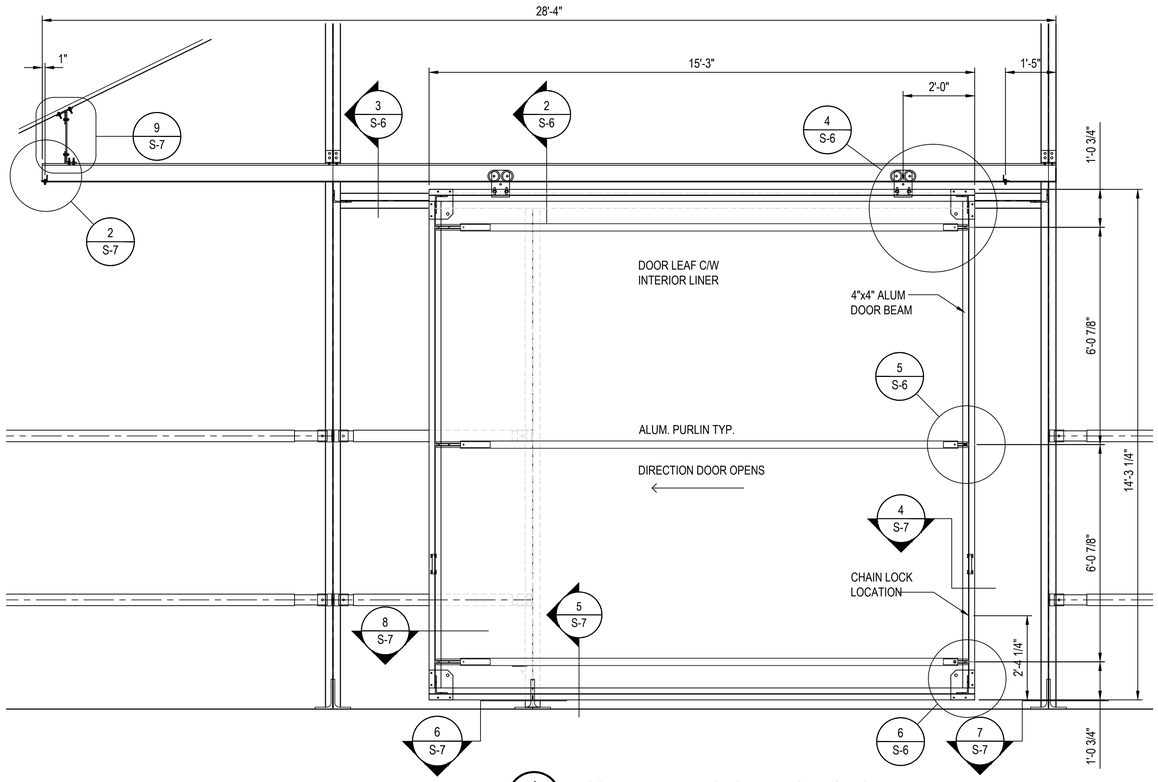

1 S-6 DOOR LEAF ELEVATION (VIEW FROM INSIDE)
1/2"=1'-0"

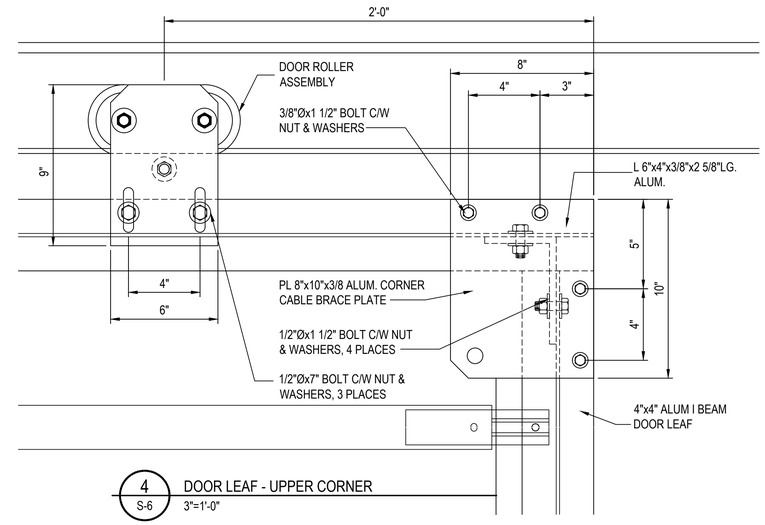

4 S-6 DOOR LEAF - UPPER CORNER
3"=1'-0"

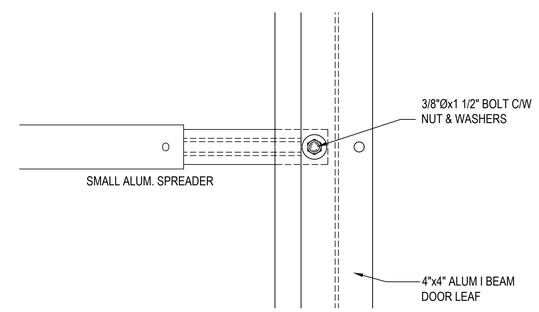

5 S-6 DOOR LEAF - SPREADER BRACKET
3"=1'-0"

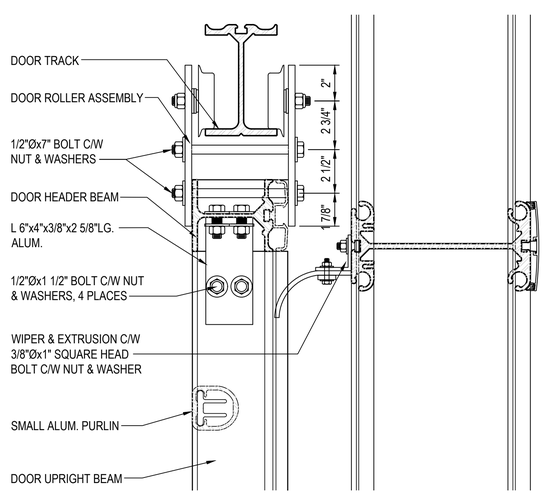

2 S-6 FESD TOP TRACK - SECTION
3"=1'-0"

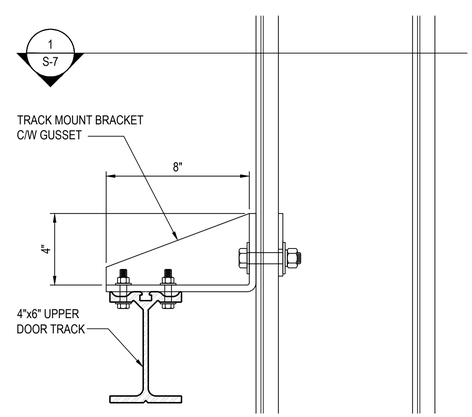

3 S-6 TOP TRACK CONNECTION - SECTION
3"=1'-0"

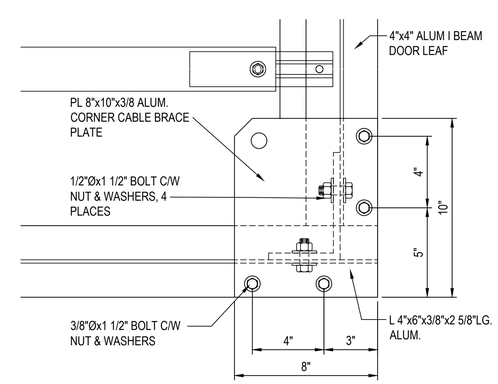

6 S-6 DOOR LEAF - BOTTOM CORNER
3"=1'-0"

SIGNATURE SERIES

sprung STRUCTURES
TOLL FREE: 1-800-528-9899
(403) 601-2292 www.sprung.com

PROFESSIONAL STRUCTURAL ENGINEER
CAMERIA M. FLOWERS
No. 353834
09/26/2025
STATE OF UTAH

canyons STRUCTURAL CONSULTING
1245 E. BRICKYARD ROAD, SUITE 200
SALT LAKE CITY, UTAH
PH. (801) 486.6848
FIRM #: F-21890
info@canyonsstructural.com
www.canyonsstructural.com

RPE22 MAYFLOWER CONDOMINIUMS LLC.

60'-0" x 90'-0"
WAREHOUSE
PARK CITY, UTAH, UNITED STATES

REV.	MM/DD/YY	BY	DESCRIPTION
2	09/18/25	EH	REVISE TO CONCRETE FOUNDATION
3			
4			
5			
6			
7			
8			
9			

FLAT END SLIDING DOOR DETAILS

DATE: 08/07/2025
DRAWN BY: D. BENNETT

S-6

SPRUNG WO# 28606

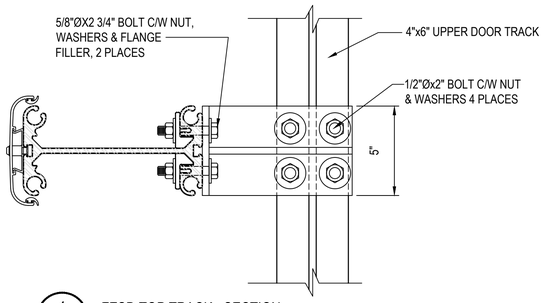

1 S-7 FESD TOP TRACK - SECTION
3"=1'-0"

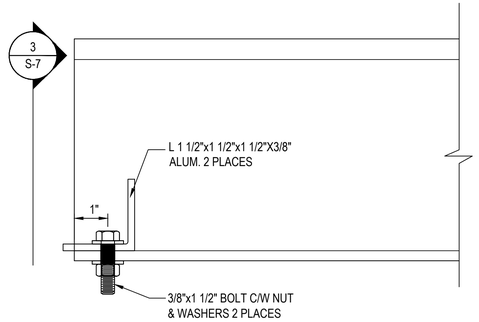

2 S-7 DOOR TRACK DOOR BUMPER - ELEV.
6"=1'-0"

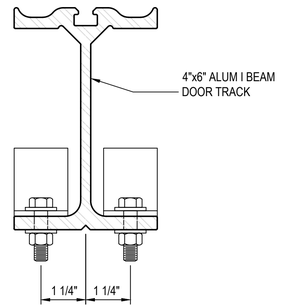

3 S-7 DOOR TRACK DOOR BUMPER - SECTION
6"=1'-0"

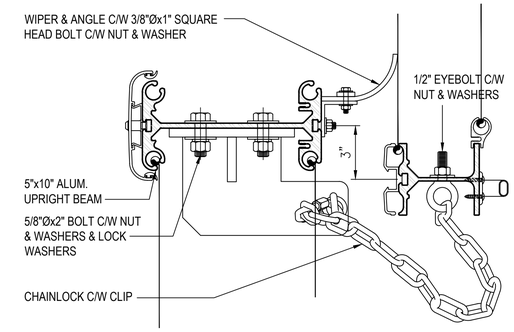

4 S-7 CHAIN LOCK - SECTION
3"=1'-0"

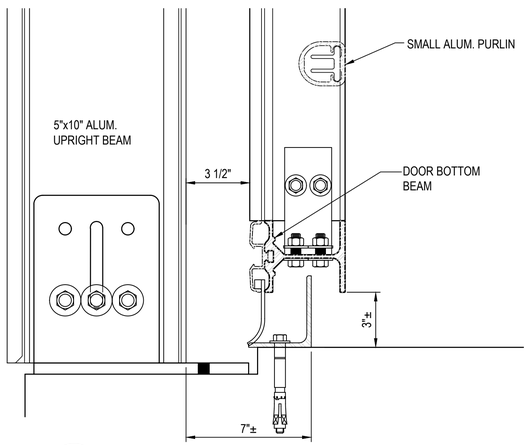

5 S-7 FESD BOTTOM ASSEMBLY - SECTION
3"=1'-0"

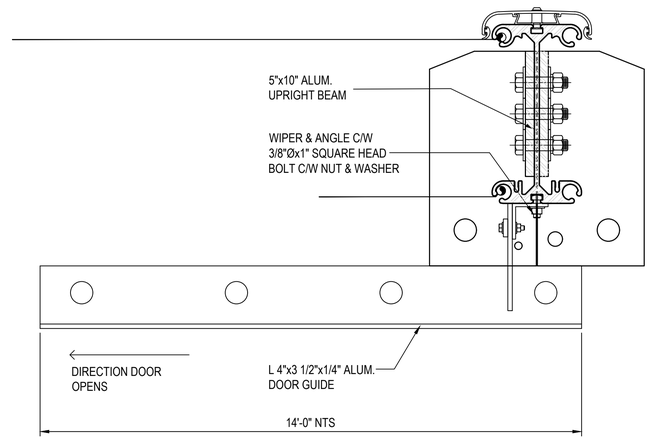

6 S-7 LARGE BOTTOM TRACK - SECTION
3"=1'-0"

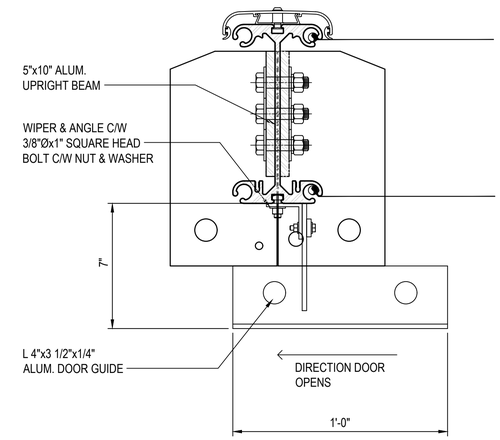

7 S-7 SMALL BOTTOM TRACK - SECTION
3"=1'-0"

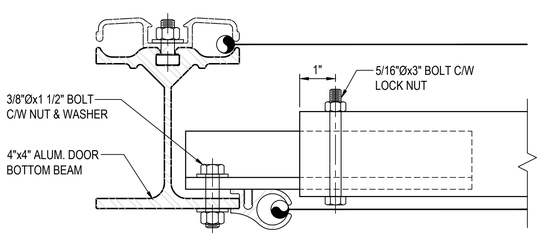

8 S-7 PURLIN CONNECTION - SECTION
6"=1'-0"

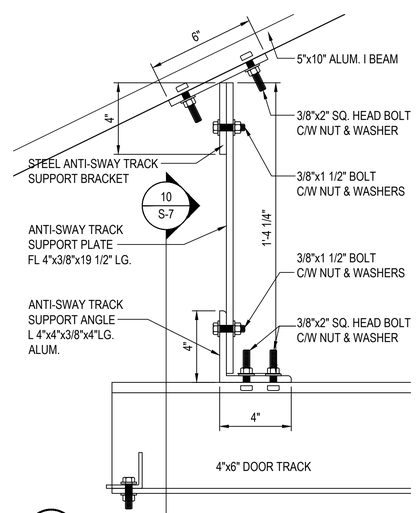

9 S-7 ANTI-SWAY TRACK SUPPORT - ELEVATION
3"=1'-0"

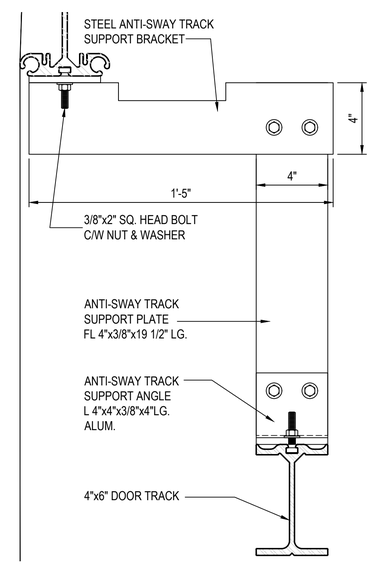

10 S-7 ANTI-SWAY TRACK SUPPORT - SECTION
3"=1'-0"

SIGNATURE SERIES

sprung STRUCTURES
TOLL FREE: 1-800-528-9899
(403) 601-2292 www.sprung.com

PROFESSIONAL STRUCTURAL ENGINEER
CAMERIA M. FLOWERS
No. 353834
09/09/2025
STATE OF UTAH

canyons STRUCTURAL CONSULTING
1245 E. BRICKYARD ROAD, SUITE 200
SALT LAKE CITY, UTAH
PH. (801) 486.6848
FIRM #: F-21890
info@canyonsstructural.com
www.canyonsstructural.com

RPE22 MAYFLOWER CONDOMINIUMS LLC.

60'-0" x 90'-0"

WAREHOUSE

PARK CITY, UTAH, UNITED STATES

REV.	MM/DD/YY	BY	DESCRIPTION
2	09/18/25	EH	REVISE TO CONCRETE FOUNDATION
3			
4			
5			
6			
7			
8			
9			

FESD TRACK & BASE DETAILS

DATE: 08/07/2025
DRAWN BY: D. BENNETT

S-7

SPRUNG WO# 28606

P:\PROJECTS_PENDING\RPE22 MAYFLOWER CONDOMINIUMS LLC_WAREHOUSE\CONSTRUCTION DRAWINGS\RPE22 MAYFLOWER WAREHOUSE - FOUNDATION.DWG
9/9/2025 1:38:27 PM