DOCUMENT 00 11 13

ADVERTISEMENT FOR BIDS FOR 475 EAST CLOSURE PROJECT

Sealed Bids for the construction of the **475 EAST CLOSURE PROJECT** will be received by North Ogden City**,** at the City Office, 505 East 2600 North, North Ogden, UT, until 2:00 pm local time on October 2, 2025, at which time the Bids received will be publicly opened and read. The Project consists of the installation of 2 islands on 475 East and around the corner on 2550 North The project has an Engineer's Estimate of $20,000.

Bids will be received for a single prime Contract. Bids shall be on a unit price basis, as indicated in the Bid Form. All documents listed in paragraph 7.01 of the Bid Form must be submitted.

No pre-bid conference will be held.

Bid security shall be furnished in accordance with the Instructions to Bidders.

Bidders shall submit proof of qualifications to perform the Work as described in the Instructions to Bidders.

Owner reserves the right to reject any or all Bids, to waive any informality in a Bid, and to make awards in the best interests of the Owner.

END OF ADVERTISEMENT FOR BIDS

Full notice of this Advertisement for Bids can also be obtained from:

- City Office, 505 East 2600 North, North Ogden, UT
- www.northogdencity.com
- www.utah.gov/pmn

For a copy of the Advertisement, please call 801-782-7211.

NORTH OGDEN CITY

SETTLED 1851

475 EAST CLOSURE PROJECT

September 2025

PROJECT MANUAL

for

NORTH OGDEN CITY

475 EAST CLOSURE PROJECT

SUMMARY OVERVIEW (BRIEF)
475 EAST CLOSURE PROJECT

**This page is intended to be a helpful reference for the Project and does not replace the information contained in the full Project Manual or from any subsequent Addenda. The Contractor is responsible to review and follow the requirements of the Project Manual.*

RECEIPT OF BIDS: October 2, 2025, 2:00 pm**,** *See Advertisement for more info.*

DESCRIPTION OF WORK: The work consists of the installation of 2 islands on 475 and around the corner on 2550 North as indicated in the Contract Documents and Plans. *This is not the full scope of work. See Bid Schedule and Drawings for additional info.*

LOCATION OF THE WORK: 475 East – between 2600 North and 2550 North in North Ogden City – See

Plan Set

COMPLETION DATE: June 30, 2026, *See Agreement for more info.*

ENGINEER'S ESTIMATE: $20,000

BONDS/INSURANCE: Bids shall be accompanied by a Bid Bond. The selected Contractor shall guarantee all work with a Performance Bond, Payment Bond, and Warranty Bond. See *Instructions to Bidders and Agreement* for more info.

WARRANTY: 1-year warranty on all work performed and materials installed is required.

ENGINEER: Eric Casperson, PE, ecasperson@nogden.org

INTERNAL PROJECT DOCUMENT LINKS:

- Bid Schedule
- Measurement and Payment
- Project Specific Specifications (where applicable)
- Drawings

DOCUMENT 00 01 10
TABLE OF CONTENTS

North Ogden City
475 EAST CLOSURE PROJECT

Reference Number	Title
00 01 10	Table of Contents
	PART 1 – BIDDING REQUIREMENTS
00 11 13	Advertisement for Bids
00 21 13	Instructions to Bidders
	BID FORMS
00 41 23	Bid Form
00 43 13	Bid Bond
	SUPPLEMENTS TO BID FORMS
00 43 36	List of Proposed Subcontractors
00 45 15	North Ogden City "Choosing by Advantages System of Decision Making" Form
00 45 39	E-Verify Form
	PART 2 – CONTRACTING REQUIREMENTS
	AGREEMENT FORMS
00 51 00	Notice of Award
00 52 00	Agreement
00 55 00	Notice to Proceed
	BONDS AND CERTIFICATES
00 61 13.13	Performance Bond
00 61 13.16	Payment Bond
00 61 13.19	Warranty Bond
00 62 16	Certificate of Insurance
	OTHER FORMS *(Available Upon Request)*
	Application for Payment
	Change Order
	Certificate of Substantial Completion
	Notice of Acceptability of Work
	PART 3 – CONDITIONS OF THE CONTRACT
00 72 00	Standard General Conditions of the Construction Contract (2013)
00 73 00	Supplementary Conditions
00 91 13	Addenda

PART 4 – TECHNICAL SPECIFICATIONS

PROJECT SPECIFICATIONS

01 11 01 Measurement and Payment

01 31 13 Coordination

CITY STANDARD SPECIFICATIONS

All provisions of the currently adopted Public Works Standards, with all amendments and revisions, are made a part of the Technical Specifications by reference.

2017 MANUAL OF STANDARD SPECIFICATIONS (commonly known as APWA Specs)

Except for the General Conditions (Document 00 72 00), all provisions of the Manual of Standard Specifications, 2017 Edition, as published by the Utah LTAP Center, Utah State University, Logan, Utah, with all published amendments, are hereby made a part of the Technical Specifications by reference.

PART 5 – DRAWINGS

North Ogden City 475 EAST CLOSURE PROJECT, 2 Sheets

Part 1: Bidding Requirements

DOCUMENT 00 11 13
ADVERTISEMENT FOR BIDS FOR 475 EAST CLOSURE PROJECT

Sealed Bids for the construction of the **475 EAST CLOSURE PROJECT** will be received by North Ogden City**,** at the City Office, 505 East 2600 North, North Ogden, UT, until 2:00 pm local time on October 2, 2025, at which time the Bids received will be publicly opened and read. The Project consists of the installation of 2 islands on 475 East and around the corner on 2550 North The project has an Engineer's Estimate of $20,000.

Bids will be received for a single prime Contract. Bids shall be on a unit price basis, as indicated in the Bid Form. All documents listed in paragraph 7.01 of the Bid Form must be submitted.

No pre-bid conference will be held.

Bid security shall be furnished in accordance with the Instructions to Bidders.

Bidders shall submit proof of qualifications to perform the Work as described in the Instructions to Bidders.

Owner reserves the right to reject any or all Bids, to waive any informality in a Bid, and to make awards in the best interests of the Owner.

END OF ADVERTISEMENT FOR BIDS

Full notice of this Advertisement for Bids can also be obtained from:

- City Office, 505 East 2600 North, North Ogden, UT
- www.northogdencity.com
- www.utah.gov/pmn

For a copy of the Advertisement, please call 801-782-7211.

DOCUMENT 00 21 13
INSTRUCTIONS TO BIDDERS

TABLE OF CONTENTS

Page

ARTICLE 1 – Defined Terms 2

ARTICLE 2 – Copies of Bidding Documents 2

ARTICLE 3 – Qualifications of Bidders 2

ARTICLE 4 – Site and Other Areas; Existing Site Conditions; Examination of Site; Owner's Safety Program; Other Work at the Site 2

ARTICLE 5 – Bidder's Representations 4

ARTICLE 6 – Pre-Bid Conference 5

ARTICLE 7 – Interpretations and Addenda 5

ARTICLE 8 – Bid Security 5

ARTICLE 9 – Contract Times 6

ARTICLE 10 – Liquidated Damages 6

ARTICLE 11 – Substitute and "Or-Equal" Items 6

ARTICLE 12 – Subcontractors, Suppliers, and Others 7

ARTICLE 13 – Preparation of Bid 7

ARTICLE 14 – Basis of Bid 8

ARTICLE 15 – Submittal of Bid 8

ARTICLE 16 – Modification and Withdrawal of Bid 10

ARTICLE 17 – Opening of Bids 10

ARTICLE 18 – Bids to Remain Subject to Acceptance 10

ARTICLE 19 – Evaluation of Bids and Award of Contract 10

ARTICLE 20 – Bonds and Insurance 11

ARTICLE 21 – Signing of Agreement 11

ARTICLE 1 – DEFINED TERMS

1.1 Terms used in these Instructions to Bidders have the meanings indicated in the General Conditions and Supplementary Conditions. Additional terms used in these Instructions to Bidders have the meanings indicated below:

A. *Issuing Office* – The office from which the Bidding Documents are to be issued.

ARTICLE 2 – COPIES OF BIDDING DOCUMENTS

2.1 Complete sets of the Bidding Documents may be obtained from the Issuing Office in the number and format stated in the advertisement or invitation to bid.

2.2 Complete sets of Bidding Documents shall be used in preparing Bids; neither Owner nor Engineer assumes any responsibility for errors or misinterpretations resulting from the use of incomplete sets of Bidding Documents.

2.3 Owner and Engineer, in making copies of Bidding Documents available on the above terms, do so only for the purpose of obtaining Bids for the Work and do not authorize or confer a license for any other use.

ARTICLE 3 – QUALIFICATIONS OF BIDDERS

3.1 To demonstrate Bidder's qualifications to perform the Work:

A. Bidder shall submit with its Bid those items listed in Paragraph 7.01 of the Bid Form; and

B. After submitting its Bid and within fourteen (14) days of Owner's request, Bidder shall submit those items listed in Paragraph 7.02 of the Bid Form.

C. When providing Subcontractor and Supplier qualification information; coordinate with provisions of Article 12 of these Instructions.

3.2 A Bidder's failure to submit required qualification information within the times indicated may disqualify Bidder from receiving an award of the Contract.

3.3 No requirement in this Article 3 to submit information will prejudice the right of Owner to seek additional pertinent information regarding Bidder's qualifications.

3.4 Bidder is advised to carefully review those portions of the Bid Form requiring Bidder's representations and certifications.

ARTICLE 4 – SITE AND OTHER AREAS; EXISTING SITE CONDITIONS; EXAMINATION OF SITE; OWNER'S SAFETY PROGRAM; OTHER WORK AT THE SITE

4.1 *Site and Other Areas*

A. The Site is identified in the Bidding Documents. The Site includes rights-of-way, easements, and other lands furnished by Owner for the use of the Contractor. Any additional land required for temporary construction facilities, construction equipment, or storage of materials and equipment, and any access needed for such additional lands, are to be obtained and paid for by Contractor.

B. Not Used.

4.2 *Existing Site Conditions*

A. Subsurface and Physical Conditions; Hazardous Environmental Conditions

1. The Supplementary Conditions identify:

a. those reports known to Owner of explorations and tests of subsurface conditions at or adjacent to the Site.

b. those drawings known to Owner of physical conditions relating to existing surface or subsurface structures at the Site (except Underground Facilities).

c. reports and drawings known to Owner relating to Hazardous Environmental Conditions that have been identified at or adjacent to the Site.

d. Technical Data contained in such reports and drawings.

2. Owner will make copies of reports and drawings referenced above available to any Bidder on request. These reports and drawings are not part of the Contract Documents, but the Technical Data contained therein upon whose accuracy Bidder is entitled to rely, as provided in the General Conditions, has been identified and established in the Supplementary Conditions. Bidder is responsible for any interpretation or conclusion Bidder draws from any Technical Data or any other data, interpretations, opinions, or information contained in such reports or shown or indicated in such drawings.

3. If the Supplementary Conditions do not identify Technical Data, the default definition of Technical Data set forth in Article 1 of the General Conditions will apply.

B. Underground Facilities: Information and data shown or indicated in the Bidding Documents with respect to existing Underground Facilities at or adjacent to the Site are set forth in the Contract Documents and are based upon information and data furnished to Owner and Engineer by owners of such Underground Facilities, including Owner, or others.

C. Adequacy of Data: Provisions concerning responsibilities for the adequacy of data furnished to prospective Bidders with respect to subsurface conditions, other physical conditions, and Underground Facilities, and possible changes in the Bidding Documents due to differing or unanticipated subsurface or physical conditions appear in Paragraphs 5.03, 5.04, and 5.05 of the General Conditions. Provisions concerning responsibilities for the adequacy of data furnished to prospective Bidders with respect to a Hazardous Environmental Condition at the Site, if any, and possible changes in the Contract Documents due to any Hazardous Environmental Condition uncovered or revealed at the Site which was not shown or indicated in the Drawings or Specifications or identified in the Contract Documents to be within the scope of the Work, appear in Paragraph 5.06 of the General Conditions.

4.3 *Site Visit and Testing by Bidders*

A. Bidder shall conduct the required Site visit during normal working hours and shall not disturb any ongoing operations at the Site.

B. Bidder is not required to conduct any subsurface testing, or exhaustive investigations of Site conditions.

C. On request, and to the extent Owner has control over the Site, and schedule permitting, the Owner will provide Bidder access to the Site to conduct such additional examinations, investigations, explorations, tests, and studies as Bidder deems necessary for preparing and submitting a successful Bid. Owner will not have any obligation to grant such access if doing so is not practical because of existing operations, security or safety concerns, or restraints on Owner's authority regarding the Site.

D. Bidder shall comply with all applicable Laws and Regulations regarding excavation and location of utilities, obtain all permits, and comply with all terms and conditions established by Owner or by property owners or other entities controlling the Site with respect to schedule, access, existing operations, security, liability insurance, and applicable safety programs.

E. Bidder shall fill all holes and clean up and restore the Site to its former condition upon completion of such explorations, investigations, tests, and studies.

4.4 *Owner's Safety Program*

A. Site visits and work at the Site may be governed by an Owner safety program. As the General Conditions indicate, if an Owner safety program exists, it will be noted in the Supplementary Conditions.

4.5 *Other Work at the Site*

A. Reference is made to Article 8 of the Supplementary Conditions for the identification of the general nature of other work of which Owner is aware (if any) that is to be performed at the Site by Owner or others (such as utilities and other prime contractors) and relates to the Work contemplated by these Bidding Documents. If Owner is party to a written contract for such other work, then on request, Owner will provide to each Bidder access to examine such contracts (other than portions thereof related to price and other confidential matters), if any.

ARTICLE 5 – BIDDER'S REPRESENTATIONS

5.1 It is the responsibility of each Bidder before submitting a Bid to:

A. examine and carefully study the Bidding Documents, and any data and reference items identified in the Bidding Documents;

B. visit the Site, conduct a thorough, alert visual examination of the Site and adjacent areas, and become familiar with and satisfy itself as to the general, local, and Site conditions that may affect cost, progress, and performance of the Work;

C. become familiar with and satisfy itself as to all Laws and Regulations that may affect cost, progress, and performance of the Work;

D. not used;

E. consider the information known to Bidder itself; information commonly known to contractors doing business in the locality of the Site; information and observations obtained from visits to the Site; the Bidding Documents; and drawings identified in the Bidding Documents, with respect to the effect of such information, observations, and documents on (1) the cost, progress, and performance of the Work; (2) the means, methods, techniques, sequences, and procedures of construction to be employed by Bidder; and (3) Bidder's safety precautions and programs;

F. agree, based on the information and observations referred to in the preceding paragraph, that at the time of submitting its Bid no further examinations, investigations, explorations, tests, studies, or data are necessary for the determination of its Bid for performance of the Work at the price bid and within the times required, and in accordance with the other terms and conditions of the Bidding Documents;

G. become aware of the general nature of the work to be performed by Owner and others at the Site that relates to the Work as indicated in the Bidding Documents;

H. promptly give Engineer written notice of all conflicts, errors, ambiguities, or discrepancies that Bidder discovers in the Bidding Documents and confirm that the written resolution thereof by Engineer is acceptable to Bidder;

I. determine that the Bidding Documents are generally sufficient to indicate and convey understanding of all terms and conditions for the performance and furnishing of the Work; and

J. agree that the submission of a Bid will constitute an incontrovertible representation by Bidder that Bidder has complied with every requirement of this Article, that without exception the Bid and all prices in the Bid are premised upon performing and furnishing the Work required by the Bidding Documents.

ARTICLE 6 – PRE-BID CONFERENCE

6.01 No pre-Bid conference will be held.

ARTICLE 7 – INTERPRETATIONS AND ADDENDA

7.1 All questions about the meaning or intent of the Bidding Documents are to be submitted to Engineer in writing no later than 72 hours in advance of the opening of Bids. Interpretations or clarifications considered necessary by Engineer in response to such questions will be issued by Addenda delivered to all parties recorded as having received the Bidding Documents. Questions received less than 72 hours prior to the date for opening of Bids may not be answered. Only questions answered by Addenda will be binding. Oral and other interpretations or clarifications will be without legal effect.

7.2 Addenda may be issued to clarify, correct, supplement, or change the Bidding Documents.

ARTICLE 8 – BID SECURITY

8.1 A Bid must be accompanied by Bid security made payable to Owner in an amount of five percent (5%) of Bidder's maximum Bid price (determined by adding the base bid and all alternates) and

in the form of a certified check, bank money order, or a Bid bond (on the form included in the Bidding Documents) issued by a surety meeting the requirements of Paragraphs 6.01 and 6.02 of the General Conditions.

8.2 The Bid security of the apparent Successful Bidder will be retained until Owner awards the contract to such Bidder, and such Bidder has executed the Contract Documents, furnished the required contract security, and met the other conditions of the Notice of Award, whereupon the Bid security will be released. If the Successful Bidder fails to execute and deliver the Contract Documents and furnish the required contract security within 15 days after the Notice of Award, Owner may consider Bidder to be in default, annul the Notice of Award, and the Bid security of that Bidder will be forfeited. Such forfeiture shall be Owner's exclusive remedy if Bidder defaults.

8.3 The Bid security of other Bidders that Owner believes to have a reasonable chance of receiving the award may be retained by Owner until the earlier of seven days after the Effective Date of the Contract or 61 days after the Bid opening, whereupon Bid security furnished by such Bidders will be released.

8.4 Bid security of other Bidders that Owner believes do not have a reasonable chance of receiving the award will be released within seven days after the Bid opening.

ARTICLE 9 – CONTRACT TIMES

9.01 The number of days within which, or the dates by which Milestones are to be achieved, if specified, and the Work is to be substantially completed, and completed and ready for final payment, are set forth in the Agreement.

ARTICLE 10 – LIQUIDATED DAMAGES

10.01 Provisions for liquidated damages, if any, for failure to timely attain a Milestone, Substantial Completion, or completion of the Work in readiness for final payment, are set forth in the Agreement.

ARTICLE 11 – SUBSTITUTE AND "OR-EQUAL" ITEMS

11.1 The Contract for the Work, as awarded, will be on the basis of materials and equipment specified or described in the Bidding Documents, and those "or-equal" or substitute or materials and equipment subsequently approved by Engineer prior to the submittal of Bids and identified by Addendum. No item of material or equipment will be considered by Engineer as an "or-equal" or substitute unless written request for approval has been submitted by Bidder and has been received by Engineer at least 72 hours prior to the date for receipt of Bids. Each such request shall comply with the requirements of Paragraphs 7.04 and 7.05 of the General Conditions. The burden of proof of the merit of the proposed item is upon Bidder. Engineer's decision of approval or disapproval of a proposed item will be final. If Engineer approves any such proposed item, such approval will be set forth in an Addendum issued to all prospective Bidders. Bidders shall not rely upon approvals made in any other manner.

11.2 All prices that Bidder sets forth in its Bid shall be based on the presumption that the Contractor will furnish the materials and equipment specified or described in the Bidding Documents, as

supplemented by Addenda. Any assumptions regarding the possibility of post-Bid approvals of "or-equal" or substitution requests are made at Bidder's sole risk.

ARTICLE 12 – SUBCONTRACTORS, SUPPLIERS, AND OTHERS

12.1 A Bidder shall be prepared to retain specific Subcontractors, Suppliers, or other individuals or entities for the performance of the Work if required by the Bidding Documents (most commonly in the Specifications) to do so. If a prospective Bidder objects to retaining any such Subcontractor, Supplier, or other individual or entity, and the concern is not relieved by an Addendum, then the prospective Bidder should refrain from submitting a Bid.

12.2 After the submittal of the Bid, Owner may not require the Successful Bidder or Contractor to retain any Subcontractor, Supplier, or other individual or entity against which Contractor has reasonable objection.

12.3 The apparent Successful Bidder, and any other Bidder so requested, shall within five days after Bid opening, submit to Owner a list of the Subcontractors performing greater than 5% of the work (cost-based), as well any material suppliers, pipe and appurtenance suppliers, asphalt suppliers, concrete suppliers, and other suppliers as requested by Owner or Engineer.

If requested by Owner, such list shall be accompanied by an experience statement with pertinent information regarding similar projects and other evidence of qualification for each such Subcontractor, Supplier, or other individual or entity. If Owner or Engineer, after due investigation, has reasonable objection to any proposed Subcontractor, Supplier, individual, or entity, Owner may, before the Notice of Award is given, request apparent Successful Bidder to submit an acceptable substitute, in which case apparent Successful Bidder shall submit a substitute, Bidder's Bid price will be increased (or decreased) by the difference in cost occasioned by such substitution, and Owner may consider such price adjustment in evaluating Bids and making the Contract award.

12.4 If apparent Successful Bidder declines to make any such substitution, Owner may award the Contract to the next lowest Bidder that proposes to use acceptable Subcontractors, Suppliers, or other individuals or entities. Declining to make requested substitutions will constitute grounds for forfeiture of the Bid security of any Bidder. Any Subcontractor, Supplier, individual, or entity so listed and against which Owner or Engineer makes no written objection prior to the giving of the Notice of Award will be deemed acceptable to Owner and Engineer subject to subsequent revocation of such acceptance as provided in Paragraph 7.06 of the General Conditions.

ARTICLE 13 – PREPARATION OF BID

13.1 The Bid Form is included with the Bidding Documents.

A. All blanks on the Bid Form shall be completed in ink, and the Bid Form signed in ink. Erasures or alterations shall be initialed in ink by the person signing the Bid Form. A Bid price shall be indicated for each section, Bid item, alternate, adjustment unit price item, and unit price item listed therein.

B. If the Bid Form expressly indicates that submitting pricing on a specific alternate item is optional, and Bidder elects to not furnish pricing for such optional alternate item, then Bidder may enter the words "No Bid" or "Not Applicable."

13.2 A Bid by a corporation shall be executed in the corporate name by a corporate officer (whose title must appear under the signature), accompanied by evidence of authority to sign. The corporate address and state of incorporation shall be shown.

13.3 A Bid by a partnership shall be executed in the partnership name and signed by a partner (whose title must appear under the signature), accompanied by evidence of authority to sign. The partnership's address for receiving notices shall be shown.

13.4 A Bid by a limited liability company shall be executed in the name of the firm by a member or other authorized person and accompanied by evidence of authority to sign. The state of formation of the firm and the firm's address for receiving notices shall be shown.

13.5 A Bid by an individual shall show the Bidder's name and address for receiving notices.

13.6 A Bid by a joint venture shall be executed by an authorized representative of each joint venturer in the manner indicated on the Bid Form. The joint venture's address for receiving notices shall be shown.

13.7 All names shall be printed in ink below the signatures.

13.8 The Bid shall contain an acknowledgment of receipt of all Addenda, the numbers of which shall be filled in on the Bid Form.

13.9 Postal and e-mail addresses and telephone numbers for communications regarding the Bid shall be shown.

13.10 The Bid shall contain evidence of Bidder's authority and qualification to do business in the state where the Project is located, or Bidder shall covenant in writing to obtain such authority and qualification prior to award of the Contract and attach such covenant to the Bid. Bidder's state contractor license number, if any, shall also be shown on the Bid Form.

ARTICLE 14 – BASIS OF BID

14.1 *Base Bid with Alternates*

A. Bidders shall submit a Bid on a unit price basis for each item of Work listed in the base Bid and include separate unit prices for each item of Work listed in each alternate described in the Bidding Documents and as provided for in the Bid Form, unless otherwise indicated. The total price for each alternate will be the amount added to or deleted from the total base Bid if Owner selects the alternate.

B. In the comparison of Bids, alternates will be applied in the same order of priority as listed in the Bid Form.

14.2 *Sectional Bids*

A. Bidders may submit a Bid on a unit price basis for any individual section or any combination of sections, as set forth in the Bid Form. When submitting a Bid for a section, a unit price shall be specified for each item of Work in that section.

B. Submission of a Bid on any section signifies Bidder's willingness to enter into a Contract for that section alone at the price offered.

C. If Bidder submits Bids on individual sections and a Bid based on a combination of those sections, such combined Bid need not be the sum of the Bids on the individual sections.

D. Bidders offering a Bid on one or more sections shall be capable of completing the Work covered by those sections within the time period stated in the Agreement.

14.3 *Unit Price*

A. The "Bid Price" (sometimes referred to as the extended price) for each unit price Bid item will be the product of the "Estimated Quantity" (which Owner or its representative has set forth in the Bid Form) for the item and the corresponding "Bid Unit Price" offered by the Bidder. The total of all unit price Bid items will be the sum of these "Bid Prices"; such total will be used by Owner for Bid comparison purposes. The final quantities and Contract Price will be determined in accordance with Paragraph 13.03 of the General Conditions. Unit Price shall be submitted as dollars and cents with no more than 2 decimal points given (e.g., $2.50).

B. Discrepancies between the multiplication of units of Work and unit prices will be resolved in favor of the unit prices. Discrepancies between the indicated sum of any column of figures and the correct sum thereof will be resolved in favor of the correct sum.

14.4 *Allowances*

A. For cash allowances the Bid price shall include such amounts as the Bidder deems proper for Contractor's overhead, costs, profit, and other expenses on account of cash allowances, if any, named in the Contract Documents, in accordance with Paragraph 13.02.B of the General Conditions.

ARTICLE 15 – SUBMITTAL OF BID

15.1 The Bid Form is to be completed and submitted with the Bid Security and the other documents required to be submitted under the terms of Article 7 of the Bid Form.

15.2 A Bid shall be received no later than the date and time prescribed and at the place indicated in the advertisement or invitation to bid and shall be enclosed in a plainly marked package with the Project title (and, if applicable, the designated portion of the Project for which the Bid is submitted), the name and address of Bidder, and shall be accompanied by the Bid security and other required documents. If a Bid is sent by mail or other delivery system, the sealed envelope containing the Bid shall be enclosed in a separate package plainly marked on the outside with the notation "BID ENCLOSED." A mailed Bid shall be addressed to the location of the opening of Bids as indicated in the Advertisement for Bids. It is the responsibility of the Bidder to verify receipt of the Bid.

15.3 Bids received after the date and time prescribed for the opening of bids, or not submitted at the correct location or in the designated manner, will not be accepted and will be returned to the Bidder unopened.

ARTICLE 16 – MODIFICATION AND WITHDRAWAL OF BID

16.1 A Bid may be withdrawn by an appropriate document duly executed in the same manner that a Bid must be executed and delivered to the place where Bids are to be submitted prior to the date and time for the opening of Bids. Upon receipt of such notice, the unopened Bid will be returned to the Bidder.

16.2 If a Bidder wishes to modify its Bid prior to Bid opening, Bidder must withdraw its initial Bid in the manner specified in Paragraph 16.01 and submit a new Bid prior to the date and time for the opening of Bids.

16.3 If, within 24 hours after Bids are opened, any Bidder files a duly signed written notice with Owner and promptly thereafter demonstrates to the reasonable satisfaction of Owner that there was a material and substantial mistake in the preparation of its Bid, that Bidder may withdraw its Bid, and the Bid security will be returned. Thereafter, if the Work is rebid, that Bidder will be disqualified from further bidding on the Work.

ARTICLE 17 – OPENING OF BIDS

17.01 Bids will be opened at the time and place indicated in the advertisement or invitation to bid and, unless obviously non-responsive, read aloud publicly. An abstract of the amounts of the base Bids and major alternates, if any, will be made available to Bidders after the opening of Bids.

ARTICLE 18 – BIDS TO REMAIN SUBJECT TO ACCEPTANCE

18.01 All Bids will remain subject to acceptance for the period of time stated in the Bid Form, but Owner may, in its sole discretion, release any Bid and return the Bid security prior to the end of this period.

ARTICLE 19 – EVALUATION OF BIDS AND AWARD OF CONTRACT

19.1 Owner reserves the right to reject any or all Bids, including without limitation, nonconforming, nonresponsive, unbalanced, or conditional Bids. Owner will reject the Bid of any Bidder that Owner finds, after reasonable inquiry and evaluation, to not be responsible. If Bidder purports to add terms or conditions to its Bid, takes exception to any provision of the Bidding Documents, or attempts to alter the contents of the Contract Documents for purposes of the Bid, then the Owner will reject the Bid as nonresponsive; provided that Owner also reserves the right to waive all minor informalities not involving price, time, or changes in the Work.

19.2 If Owner awards the contract for the Work, such award shall be to the responsible Bidder submitting the lowest responsive Bid.

19.3 Evaluation of Bids

A. In evaluating Bids, Owner will consider whether or not the Bids comply with the prescribed requirements, and such alternates, unit prices, and other data, as may be requested in the Bid Form or prior to the Notice of Award.

B. When unit price bids are submitted, Bids will be compared on the basis of the total of the products of the estimated quantity of each item and unit price Bid for that item, together with any lump sum items. Discrepancies between the multiplication of units of Work and

unit prices will be resolved in favor of the unit prices. Discrepancies between the indicated sum of any column of figures and the correct sum thereof will be resolved in favor of the correct sum. Unit prices shall be rounded to the hundredth of a dollar (e.g., $1.67, not $1.666).

C. *Base Bid with Alternates*

In the comparison of Bids, alternates will be applied in the same order of priority as listed in the Bid Form. To determine the Bid prices for purposes of comparison, Owner shall announce to all bidders a "Base Bid plus alternates" budget after receiving all Bids, but prior to opening them. For comparison purposes, alternates will be accepted, following the order of priority established in the Bid Form, until doing so would cause the budget to be exceeded. After determination of the Successful Bidder based on this comparative process and on the responsiveness, responsibility, and other factors set forth in these Instructions, the award may be made to said Successful Bidder on its base Bid and any combination of its additive alternate Bids for which Owner determines funds will be available at the time of award.

D. *Sectional Bids*

For determination of the apparent low Bidder(s), Bids will be compared on the basis of the aggregate of the Bids for separate sections and the Bids for combined sections that result in the lowest total amount for all of the Work.

19.4 In evaluating whether a Bidder is responsible, Owner will consider the qualifications of the Bidder and may consider the qualifications and experience of Subcontractors and Suppliers proposed for those portions of the Work for which the identity of Subcontractors and Suppliers must be submitted as provided in the Bidding Documents.

19.5 Owner may conduct such investigations as Owner deems necessary to establish the responsibility, qualifications, and financial ability of Bidders and any proposed Subcontractors or Suppliers.

ARTICLE 20 – BONDS AND INSURANCE

20.01 Article 6 of the General Conditions, as may be modified by the Supplementary Conditions, sets forth Owner's requirements as to performance and payment bonds and insurance. When the Successful Bidder delivers the Agreement (executed by Successful Bidder) to Owner, it shall be accompanied by required bonds and insurance documentation.

ARTICLE 21 – SIGNING OF AGREEMENT

21.01 When Owner issues a Notice of Award to the Successful Bidder, it shall be accompanied by the unexecuted counterparts of the Agreement along with the other Contract Documents as identified in the Agreement. Within 15 days thereafter, Successful Bidder shall execute and deliver the required number of counterparts of the Agreement and any bonds and insurance documentation required to be delivered by the Contract Documents to Owner. Within ten (10) days thereafter, Owner shall deliver one (1) fully executed counterpart of the Agreement to

Successful Bidder, together with electronic copies of the Contract Documents as stated in Paragraph 2.02 of the General Conditions.

END OF INSTRUCTIONS TO BIDDERS

DOCUMENT 00 41 23
BID FORM

475 EAST CLOSURE PROJECT

TABLE OF CONTENTS

Page

Article 1 – Bid Recipient 2
Article 2 – Bidder's Acknowledgements 2
Article 3 – Bidder's Representations 2
Article 4 – Bidder's Certification 3
Article 5 – Basis of Bid 4
Article 6 – Time of Completion 6
Article 7 – Attachments to this Bid 6
Article 8 – Defined Terms 6
Article 9 – Bid Submittal 7

ARTICLE 1 – BID RECIPIENT

1.1 This Bid is submitted to:

North Ogden City
505 East 2600 North
North Ogden, UT 84414

1.2 The undersigned Bidder proposes and agrees, if this Bid is accepted, to enter into an Agreement with Owner in the form included in the Bidding Documents to perform all Work as specified or indicated in the Bidding Documents for the prices and within the times indicated in this Bid and in accordance with the other terms and conditions of the Bidding Documents.

ARTICLE 2 – BIDDER'S ACKNOWLEDGEMENTS

2.01 Bidder accepts all of the terms and conditions of the Instructions to Bidders, including without limitation those dealing with the disposition of Bid security. This Bid will remain subject to acceptance for 60 days after the Bid opening, or for such longer period of time that Bidder may agree to in writing upon request of Owner.

ARTICLE 3 – BIDDER'S REPRESENTATIONS

3.1 In submitting this Bid, Bidder represents that:

A. Bidder has examined and carefully studied the Bidding Documents, and any data and reference items identified in the Bidding Documents, and hereby acknowledges receipt of the following Addenda:

Addendum No.	**Addendum, Date**
_____	_____
_____	_____
_____	_____
_____	_____

B. Bidder has visited the Site, conducted a thorough, alert visual examination of the Site and adjacent areas, and become familiar with and satisfied itself as to the general, local, and Site conditions that may affect cost, progress, and performance of the Work.

C. Bidder is familiar with and has satisfied itself as to all Laws and Regulations that may affect cost, progress, and performance of the Work.

D. Bidder has carefully studied all: (1) reports of explorations and tests of subsurface conditions at or adjacent to the Site and all drawings of physical conditions relating to existing surface or subsurface structures at the Site that have been identified in the Supplementary Conditions, especially with respect to Technical Data in such reports and drawings, and (2) reports and drawings relating to Hazardous Environmental Conditions, if any, at or adjacent to the Site that have been identified in the Supplementary Conditions, especially with respect to Technical Data in such reports and drawings.

E. Bidder has considered the information known to Bidder itself; information commonly known to contractors doing business in the locality of the Site; information and observations obtained from visits to the Site; the Bidding Documents; and any Site-related reports and drawings identified in the Bidding Documents, with respect to the effect of such information, observations, and documents on (1) the cost, progress, and performance of the Work; (2) the means, methods, techniques, sequences, and procedures of construction to be employed by Bidder; and (3) Bidder's safety precautions and programs.

F. Bidder agrees, based on the information and observations referred to in the preceding paragraph, that no further examinations, investigations, explorations, tests, studies, or data are necessary for the determination of this Bid for performance of the Work at the price bid and within the times required, and in accordance with the other terms and conditions of the Bidding Documents.

G. Bidder is aware of the general nature of work to be performed by Owner and others at the Site that relates to the Work as indicated in the Bidding Documents.

H. Bidder has given Engineer written notice of all conflicts, errors, ambiguities, or discrepancies that Bidder has discovered in the Bidding Documents and confirms that the written resolution thereof by Engineer is acceptable to Bidder.

I. The Bidding Documents are generally sufficient to indicate and convey understanding of all terms and conditions for the performance and furnishing of the Work.

J. The submission of this Bid constitutes an incontrovertible representation by Bidder that Bidder has complied with every requirement of this Article, and that without exception the Bid and all prices in the Bid are premised upon performing and furnishing the Work required by the Bidding Documents.

ARTICLE 4 – BIDDER'S CERTIFICATION

4.1 Bidder certifies that:

A. This Bid is genuine and not made in the interest of or on behalf of any undisclosed individual or entity and is not submitted in conformity with any collusive agreement or rules of any group, association, organization, or corporation;

B. Bidder has not directly or indirectly induced or solicited any other Bidder to submit a false or sham Bid;

C. Bidder has not solicited or induced any individual or entity to refrain from bidding; and

D. Bidder has not engaged in corrupt, fraudulent, collusive, or coercive practices in competing for the Contract. For the purposes of this Paragraph 4.01.D:

1. "corrupt practice" means the offering, giving, receiving, or soliciting of any thing of value likely to influence the action of a public official in the bidding process;

2. "fraudulent practice" means an intentional misrepresentation of facts made (a) to influence the bidding process to the detriment of Owner, (b) to establish bid prices at

artificial non-competitive levels, or (c) to deprive Owner of the benefits of free and open competition;

3. "collusive practice" means a scheme or arrangement between two or more Bidders, with or without the knowledge of Owner, a purpose of which is to establish bid prices at artificial, non-competitive levels; and

4. "coercive practice" means harming or threatening to harm, directly or indirectly, persons or their property to influence their participation in the bidding process or affect the e execution of the Contract.

ARTICLE 5 – BASIS OF BID

5.01 Bidder will complete the Work in accordance with the Contract Documents for the following price(s):

Bid Schedule on following page(s)

BID SCHEDULE
NORTH OGDEN CITY
475 EAST CLOSURE PROJECT

CONTRACTOR: _____

BASE BID

Item #	M&P Reference*	Bid Item Description	Estimated Quantity	Unit	Unit Price**	Bid Price
1	MP001	Mobilization	1	LS	$	$
2	MP002	Traffic Control	1	LS	$	$
3	MP003	Construction Survey	1	LS	$	$
4	MP004	Curb, Type R, APWA 209 – Pinned	90	LF	$	$
5	MP005	Pavement Markings, SW4	800	LF	$	$
6	MP005	Pavement Markings, SY4	500	LF	$	$
7	MP006	Relocate Sign	1	EA	$	$
8	MP007	Remove Sign	4	EA	$	$
9	MP008	Signage, R6-7 (End One Way)	1	EA	$	$
10	MP009	Landscaping, Rock	200	SF	$	$
11	MP010	Paint Existing Curb, Red	120	LF	$	$

Total Base Bid (Items# 1-11): $_____

***To go directly to Measurement and Payment click here.**

****Unit Price shall contain no more than 2 decimal points (e.g., $0.00)**

Bidder acknowledges that (1) each Bid Unit Price includes an amount considered by Bidder to be adequate to cover Contractor's overhead and profit for each separately identified item, and (2) estimated quantities are not guaranteed, and are solely for the purpose of comparison of Bids, and final payment for all unit price Bid items will be based on actual quantities, determined as provided in the Contract Documents.

ARTICLE 6 – TIME OF COMPLETION

6.1 Bidder agrees that the Work will be substantially complete and will be completed and ready for final payment in accordance with Paragraph 15.06 of the General Conditions on or before the dates or within the number of calendar days indicated in the Agreement.

6.2 Bidder accepts the provisions of the Agreement as to liquidated damages.

ARTICLE 7 – ATTACHMENTS TO THIS BID

7.1 The following documents are submitted with and made a condition of this Bid:

A. Required Bid security;

B. List of Proposed Subcontractors (see Document 00 43 36 for form);

C. Copy of current business license;

D. Copy of current Utah contractor's license;

E. North Ogden City "Choosing by Advantages" (see Document 00 45 15 for form); and

F. E-Verify Form[1] (see Document 00 45 39 for form).

7.2 The following documents shall be submitted upon request and made a condition of this Bid:

A. List of Proposed Suppliers;

B. List of Project References; and

C. Required Bidder Qualification Statement with supporting data, upon request[2].

ARTICLE 8 – DEFINED TERMS

8.01 The terms used in this Bid with initial capital letters have the meanings stated in the Instructions to Bidders, the General Conditions, and the Supplementary Conditions.

[CONTINUED ON NEXT PAGE]

[1] *Required for those Bidders with 15 or more employees. If not applicable, write "NA" on the form and submit the form as an attachment to the Bid.*

[2] *Standard forms will be provided.*

ARTICLE 9 – BID SUBMITTAL

BIDDER:_____ **Submittal Date:** _____

(Indicate correct name of bidding entity) **License Number:** _____

BY: _____

Signature: _____

Title: _____

ATTEST: _____

Signature: _____

Title: _____

(If Bidder is a corporation, a limited liability company, a partnership, or a joint venture, attach evidence of authority to sign.)

Address for Giving Notices: _____

_____

Phone: _____

POINT OF CONTACT FOR PROJECT

Name: _____

Title: _____

Email: _____

Phone: _____

Is the Point of Contact authorized to sign documents on behalf of the Bidding Entity? - **YES** - **NO** *(If no, please complete information below)*

AUTHORIZED SIGNATORY

(If different from the point of contact listed above)

Name: _____ **Email:** _____

Title: _____

END OF BID FORM

DOCUMENT 00 43 13
BID BOND

Any singular reference to Bidder, Surety, Owner or other party shall be considered plural where applicable.

BIDDER *(Name and Address)*:

SURETY *(Name, and Address of Principal Place of Business)*:

OWNER *(Name and Address)*:

BID

Bid Due Date:

Description *(475 EAST CLOSURE PROJECT— Include Location)*:

BOND

Bond Number:

Date:

Penal sum $

(Words) (Figures)

Surety and Bidder, intending to be legally bound hereby, subject to the terms set forth below, do each cause this Bid Bond to be duly executed by an authorized officer, agent, or representative.

BIDDER **SURETY**

(Seal) (Seal)

Bidder's Name and Corporate Seal

Surety's Name and Corporate Seal

By:

Signature

Print Name

Title

By:

Signature (Attach Power of Attorney)

Print Name

Title

Attest:

Signature

Title

Attest:

Signature

Title

Note: Addresses are to be used for giving any required notice.

Provide execution by any additional parties, such as joint venturers, if necessary.

Bidder and Surety, jointly and severally, bind themselves, their heirs, executors, administrators, successors, and assigns to pay to Owner upon default of Bidder the penal sum set forth on the face of this Bond. Payment of the penal sum is the extent of Bidder's and Surety's liability. Recovery of such penal sum under the terms of this Bond shall be Owner's sole and exclusive remedy upon default of Bidder.

1. Default of Bidder shall occur upon the failure of Bidder to deliver within the time required by the Bidding Documents (or any extension thereof agreed to in writing by Owner) the executed Agreement required by the Bidding Documents and any performance and payment bonds required by the Bidding Documents.

2. This obligation shall be null and void if:

   2.1 Owner accepts Bidder's Bid and Bidder delivers within the time required by the Bidding Documents (or any extension thereof agreed to in writing by Owner) the executed Agreement required by the

Bidding Documents and any performance and payment bonds required by the Bidding Documents, or

2.2 All Bids are rejected by Owner, or

2.3 Owner fails to issue a Notice of Award to Bidder within the time specified in the Bidding Documents (or any extension thereof agreed to in writing by Bidder and, if applicable, consented to by Surety when required by Paragraph 5 hereof).

3. Payment under this Bond will be due and payable upon default of Bidder and within 30 calendar days after receipt by Bidder and Surety of written notice of default from Owner, which notice will be given with reasonable promptness, identifying this Bond and the Project and including a statement of the amount due.

4. Surety waives notice of any and all defenses based on or arising out of any time extension to issue Notice of Award agreed to in writing by Owner and Bidder, provided that the total time for issuing Notice of Award including extensions shall not in the aggregate exceed 120 days from the Bid due date without Surety's written consent.

5. No suit or action shall be commenced under this Bond prior to 30 calendar days after the notice of default required in Paragraph 4 above is received by Bidder and Surety and in no case later than one year after the Bid due date.

6. Any suit or action under this Bond shall be commenced only in a court of competent jurisdiction located in the state in which the Project is located.

7. Notices required hereunder shall be in writing and sent to Bidder and Surety at their respective addresses shown on the face of this Bond. Such notices may be sent by personal delivery, commercial courier, or by United States Registered or Certified Mail, return receipt requested, postage pre-paid, and shall be deemed to be effective upon receipt by the party concerned.

8. Surety shall cause to be attached to this Bond a current and effective Power of Attorney evidencing the authority of the officer, agent, or representative who executed this Bond on behalf of Surety to execute, seal, and deliver such Bond and bind the Surety thereby.

9. This Bond is intended to conform to all applicable statutory requirements. Any applicable requirement of any applicable statute that has been omitted from this Bond shall be deemed to be included herein as if set forth at length. If any provision of this Bond conflicts with any applicable statute, then the provision of said statute shall govern and the remainder of this Bond that is not in conflict therewith shall continue in full force and effect.

The term "Bid" as used herein includes a Bid, offer, or proposal as applicable.

EJCDC® C-430, Bid Bond (Penal Sum Form). Published 2013.
Prepared by the Engineers Joint Contract Documents Committee.

DOCUMENT 00 43 36
LIST OF PROPOSED SUBCONTRACTORS

Subcontractor Company Name and Contact Person	Type of Work to be Performed	Estimated Percentage of Work

Additional information to be provided upon Owner's request.

DOCUMENT 00 45 15
CHOOSING BY ADVANTAGES SYSTEM OF DECISION MAKING (CBA)

The “Choosing By Advantages System of Decision Making” (CBA) is the process adopted by the Owner to aid in awarding contracts. CBA is based on the fundamental rule of decision making that “Decisions must be based on the importance of advantages.” An advantage is defined as a positive difference between two alternatives. The advantages of a proposal are compared to the advantages found in other proposals to determine which is preferred. CBA weighs the advantages of the preferred proposal to the additional cost when awarding contracts. Consequently, the CBA analysis may result in awarding the project to a contractor other than the low bidder.

The factors that will be used in the evaluation of proposals are listed on the following pages. For each factor, the Owner will evaluate the advantage found in each proposal. Some factors may be more important than others and will carry more weight in the decision-making process.

The following table lists each factor. Bidders will supply the information requested in each factor, and the Owner will determine the respective advantages as noted above.

CHOOSING BY ADVANTAGES

NORTH OGDEN CITY:

CONTRACTOR:

475 EAST CLOSURE PROJECT

_____

_____

The contractor will be selected by a committee appointed by the City using the "Choosing by Advantages" Decision Making Process. The Contractor must provide information for each of the following factors that will be used in the decision-making process.

Factor	Description
(1)	Number of years experience as a general contractor (10 points):
(2)	List of projects of similar size and scope completed within the past 10-years (15 points):

Factor	Description
(3)	List of key personnel with their qualifications and experience assigned to this project (10 points):
(4)	Methods, materials, materials suppliers, and sub-contractors (10 points):
(5)	List of projects completed in North Ogden City within the last 15 years (5 points):*

Factor	Description
(6) References (5 points):	
(7) Cost (45 points):	

*Previous work experience with North Ogden City is not a requirement. Projects listed in this section will help the City determine if past work with North Ogden City has been deemed successful. Projects will be considered successful if they have been completed in a timely manner, in a spirit of cooperation, with minimal contractor generated change orders, with professionalism, having achieved project objectives and other positive outcomes as noted by the review committee.

END

DOCUMENT 00 45 39
E-VERIFY FORM

COMPLETE IF COMPANY EMPLOYS OVER 15 EMPLOYEES

Private Employer Affidavit of Compliance Pursuant to Utah Code 63G-12-302

By executing this affidavit, the undersigned private employer verifies its compliance with Utah Code 63G-12-302, stating affirmatively that the individual, firm or corporation has registered with and utilizes the federal work authorization program commonly known as E-Verify, or other authorized Status Verification System, in accordance with the applicable provisions and deadlines established in Utah Code. Furthermore, the undersigned private employer hereby attests that its federal work authorization user identification number and date of authorization are as follows:

_____
Federal Tax ID #

_____
Name of Private Employer on File with E-Verify

I hereby declare under penalty of perjury that the foregoing is true and correct. I also acknowledge that the company will indemnify North Ogden City from all fines, penalties, and costs associated with the company's non-compliance with Utah Code 63G-12-302.

_____ _____
Signature of Authorized Officer or Agent Date

_____
Printed Name and Title of Authorized Officer or Agent

STATE OF UTAH)
:SS
County of_____)

On_____,_____, 20 _, personally appeared before me

_____the signer of the within instrument, who duly acknowledged to me that she executed the same.

_____
Notary Public

Part 2: Contracting Requirements

DOCUMENT 00 51 00
NOTICE OF AWARD

Date of Issuance: _____

Owner: North Ogden City

Project: 475 EAST CLOSURE PROJECT

Engineer: Eric Casperson, PE, North Ogden City Engineer

Bidder:

Bidder Address:

TO BIDDER:

You are hereby notified that Owner has accepted your Bid dated October 2, 2025, for the above Contract, and that you are the Successful Bidder and are awarded a Contract for: *Base Bid*

The Contract Price of the awarded Contract is: **$**

[1] unexecuted counterparts of the Agreement accompany this Notice of Award.

You must comply with the following conditions within 15 days of the date of this Notice of Award:

1. Deliver to Owner the Contract security and insurance documentation as specified in the Instructions to Bidders; General Conditions, Articles 2 and 6; and Supplementary Conditions
2. Deliver to Owner the Agreement, fully executed by Bidder (signed electronically or in person, as specified by Engineer)
3. Other conditions precedent (if any):

Failure to comply with these conditions within the time specified will entitle Owner to consider you in default, annul this Notice of Award, and declare your Bid security forfeited.

Within ten days after you comply with the above conditions, Owner will return to you one (1) fully executed counterpart of the Agreement, together with any additional copies of the Contract Documents as indicated in Paragraph 2.02 of the General Conditions.

Owner**:** North Ogden City

By: _____

Title: Mayor

Copy: Engineer

DOCUMENT 00 52 00
AGREEMENT
BETWEEN OWNER AND CONTRACTOR
FOR CONSTRUCTION CONTRACT

THIS AGREEMENT is by and between **North Ogden City** ("Owner") and **Contractor Name** ("Contractor").

Owner and Contractor hereby agree as follows:

ARTICLE 1 – WORK

1.01 Contractor shall complete all Work as specified or indicated in the Contract Documents. The Work is generally described as follows: *Removal and replacement of storm drain infrastructure and appurtenances, and any other items required to render the project complete.*

ARTICLE 2 – THE PROJECT

2.01 The Project, of which the Work under the Contract Documents is a part, is generally described as follows: ***475 EAST CLOSURE PROJECT***

ARTICLE 3 – ENGINEER

3.1 The part of the Project that pertains to the Work has been designed by Eric Casperson, PE, North Ogden City Engineer ("Engineer") and will act as Owner's representative, assume all duties and responsibilities, and have the rights and authority assigned to Engineer in the Contract Documents in connection with the completion of the Work in accordance with the Contract Documents.

ARTICLE 4 – CONTRACT TIMES

4.1 Time of the Essence

A. All time limits for Milestones, if any, Substantial Completion, and completion and readiness for final payment as stated in the Contract Documents are of the essence of the Contract.

4.2 Contract Times: Dates

A. The Work will be substantially completed before **June 30, 2026,** and completed and ready for final payment in accordance with Paragraph 15.06 of the General Conditions on or before <u>30 days following the date of Substantial Completion</u>.

4.3 Liquidated Damages

A. Contractor and Owner recognize that time is of the essence as stated in Paragraph 4.01 above and that Owner will suffer financial and other losses if the Work is not completed and Milestones not achieved within the times specified in Paragraph 4.02 above, plus any extensions thereof allowed in accordance with the Contract. The parties also recognize the delays, expense, and difficulties involved in proving in a legal or arbitration proceeding the

actual loss suffered by Owner if the Work is not completed on time. Accordingly, instead of requiring any such proof, Owner and Contractor agree that as liquidated damages for delay (but not as a penalty):

1. Substantial Completion: Contractor shall pay Owner **$1000.00** for each day that expires after the time (as duly adjusted pursuant to the Contract) specified in Paragraph 4.02.A above for Substantial Completion until the Work is substantially complete.
2. Completion of Remaining Work: After Substantial Completion, if Contractor shall neglect, refuse, or fail to complete the remaining Work within the Contract Times (as duly adjusted pursuant to the Contract) for completion and readiness for final payment, Contractor shall pay Owner **$500.00** for each day that expires after such time until the Work is completed and ready for final payment.
3. Liquidated damages for failing to timely attain Substantial Completion and final completion are not additive and will not be imposed concurrently.

4.4 Warranty Period

A. Work will be warranted by the Contractor for one (1) year following the date of the Certificate of Substantial Completion.

ARTICLE 5 – CONTRACT PRICE

5.1 Owner shall pay Contractor for completion of the Work in accordance with the Contract Documents the amounts that follow, subject to adjustment under the Contract:

A. For all Work, at the prices stated in Contractor's Bid, attached hereto as an exhibit.

ARTICLE 6 – PAYMENT PROCEDURES

6.1 Submittal and Processing of Payments

A. Contractor shall submit Applications for Payment in accordance with Article 15 of the General Conditions. Applications for Payment will be processed by Engineer as provided in the General Conditions.

6.2 Progress Payments; Retainage

A. Owner shall make progress payments on account of the Contract Price on the basis of Contractor's Applications for Payment on or about the 30th day of each month during performance of the Work as provided in Paragraph 6.02.A.1 below, provided that such Applications for Payment have been submitted in a timely manner and otherwise meet the requirements of the Contract. All such payments will be measured by the Schedule of Values established as provided in the General Conditions (and in the case of Unit Price Work based on the number of units completed) or, in the event there is no Schedule of Values, as provided elsewhere in the Contract.

1. Prior to Final Completion, progress payments will be made in an amount equal to the percentage indicated below but, in each case, less the aggregate of payments previously made and less such amounts as Owner may withhold, including but not limited to liquidated damages, in accordance with the Contract.

a. Ninety-five (95) percent of Work completed (with the balance being retainage). If the Work has been 50 percent completed as determined by Engineer, and if the character and progress of the Work have been satisfactory to Owner and Engineer, then as long as the character and progress of the Work remain satisfactory to Owner and Engineer, there will be no additional retainage; and

b. Ninety-five (95) percent of cost of materials and equipment not incorporated in the Work (with the balance being retainage).

6.3 Final Payment

A. Upon final completion and acceptance of the Work in accordance with Paragraph 15.06 of the General Conditions, Owner shall pay the remainder of the Contract Price as recommended by Engineer as provided in said Paragraph 15.06.

ARTICLE 7 – NOT USED

ARTICLE 8 – CONTRACTOR'S REPRESENTATIONS

8.1 To induce Owner to enter into this Contract, Contractor makes the following representations:

A. Contractor has examined and carefully studied the Contract Documents, and any data and reference items identified in the Contract Documents.

B. Contractor has visited the Site, conducted a thorough, alert visual examination of the Site and adjacent areas, and become familiar with and is satisfied as to the general, local, and Site conditions that may affect cost, progress, and performance of the Work.

C. Contractor is familiar with and is satisfied as to all Laws and Regulations that may affect cost, progress, and performance of the Work.

D. Contractor has carefully studied all: (1) reports of explorations and tests of subsurface conditions at or adjacent to the Site and all drawings of physical conditions relating to existing surface or subsurface structures at the Site that have been identified in the Supplementary Conditions, especially with respect to Technical Data in such reports and drawings, and (2) reports and drawings relating to Hazardous Environmental Conditions, if any, at or adjacent to the Site that have been identified in the Supplementary Conditions, especially with respect to Technical Data in such reports and drawings.

E. Contractor has considered the information known to Contractor itself; information commonly known to contractors doing business in the locality of the Site; information and observations obtained from visits to the Site; the Contract Documents; and the Site-related reports and drawings identified in the Contract Documents, with respect to the effect of such information, observations, and documents on (1) the cost, progress, and performance of the Work; (2) the means, methods, techniques, sequences, and procedures of construction to be employed by Contractor; and (3) Contractor's safety precautions and programs.

F. Based on the information and observations referred to in the preceding paragraph, Contractor agrees that no further examinations, investigations, explorations, tests, studies,

or data are necessary for the performance of the Work at the Contract Price, within the Contract Times, and in accordance with the other terms and conditions of the Contract.

G. Contractor is aware of the general nature of work to be performed by Owner and others at the Site that relates to the Work as indicated in the Contract Documents.

H. Contractor has given Engineer written notice of all conflicts, errors, ambiguities, or discrepancies that Contractor has discovered in the Contract Documents, and the written resolution thereof by Engineer is acceptable to Contractor.

I. The Contract Documents are generally sufficient to indicate and convey understanding of all terms and conditions for performance and furnishing of the Work.

J. Contractor's entry into this Contract constitutes an incontrovertible representation by Contractor that without exception all prices in the Agreement are premised upon performing and furnishing the Work required by the Contract Documents.

ARTICLE 9 – CONTRACT DOCUMENTS

9.1 Contents

A. The Contract Documents consist of the following:

1. This Agreement.
2. Performance bond.
3. Payment bond.
4. Warranty bond.
5. General Conditions (pages 1 to 73, inclusive).
6. Supplementary Conditions.
7. Specifications as listed in the table of contents of the Project Manual.
8. Drawings (not attached but incorporated by reference) consisting of 7 sheets with each sheet bearing the following general title: 475 EAST CLOSURE PROJECT.
9. Addenda (numbers____to____, inclusive).
10. Exhibits to this Agreement (enumerated as follows):
    a. Contractor's Bid.
11. The following which may be delivered or issued on or after the Effective Date of the Contract and are not attached hereto:
    a. Notice to Proceed.
    b. Change Orders.

B. The documents listed in Paragraph 9.01.A are attached to this Agreement (except as expressly noted otherwise above).

C. There are no Contract Documents other than those listed above in this Article 9.

D. The Contract Documents may only be amended, modified, or supplemented as provided in the General Conditions.

ARTICLE 10 – MISCELLANEOUS

10.1 Terms

A. Terms used in this Agreement will have the meanings stated in the General Conditions and the Supplementary Conditions.

10.2 Assignment of Contract

A. Unless expressly agreed to elsewhere in the Contract, no assignment by a party hereto of any rights under or interests in the Contract will be binding on another party hereto without the written consent of the party sought to be bound; and, specifically but without limitation, money that may become due and money that is due may not be assigned without such consent (except to the extent that the effect of this restriction may be limited by law), and unless specifically stated to the contrary in any written consent to an assignment, no assignment will release or discharge the assignor from any duty or responsibility under the Contract Documents.

10.3 Successors and Assigns

A. Owner and Contractor each binds itself, its successors, assigns, and legal representatives to the other party hereto, its successors, assigns, and legal representatives in respect to all covenants, agreements, and obligations contained in the Contract Documents.

10.4 Severability

A. Any provision or part of the Contract Documents held to be void or unenforceable under any Law or Regulation shall be deemed stricken, and all remaining provisions shall continue to be valid and binding upon Owner and Contractor, who agree that the Contract Documents shall be reformed to replace such stricken provision or part thereof with a valid and enforceable provision that comes as close as possible to expressing the intention of the stricken provision.

10.5 Contractor's Certifications

A. Contractor certifies that it has not engaged in corrupt, fraudulent, collusive, or coercive practices in competing for or in executing the Contract. For the purposes of this Paragraph 10.05:

1. "corrupt practice" means the offering, giving, receiving, or soliciting of any thing of value likely to influence the action of a public official in the bidding process or in the Contract execution;

2. "fraudulent practice" means an intentional misrepresentation of facts made (a) to influence the bidding process or the execution of the Contract to the detriment of Owner, (b) to establish Bid or Contract prices at artificial non-competitive levels, or (c) to deprive Owner of the benefits of free and open competition;

3. "collusive practice" means a scheme or arrangement between two or more Bidders, with or without the knowledge of Owner, a purpose of which is to establish Bid prices at artificial, non-competitive levels; and

4. "coercive practice" means harming or threatening to harm, directly or indirectly, persons or their property to influence their participation in the bidding process or affect the execution of the Contract.

10.6 Other Provisions

A. Owner stipulates that if the General Conditions that are made a part of this Contract are based on EJCDC® C-700, Standard General Conditions for the Construction Contract, published by the Engineers Joint Contract Documents Committee®, and if Owner is the party that has furnished said General Conditions, then Owner has plainly shown all modifications to the standard wording of such published document to the Contractor, through a process such as highlighting or "track changes" (redline/strikeout), or in the Supplementary Conditions.

[continued on next page]

IN WITNESS WHEREOF, Owner and Contractor have signed this Agreement.

This Agreement will be effective on_____(which is the Effective Date of the Contract).

OWNER: NORTH OGDEN CITY

By: _____

Title: Mayor

Attest: _____

Title: City Recorder

Address for giving notices:

North Ogden City

505 East 2600 North

North Ogden, UT 84414

(If Owner is a corporation, attach evidence of authority to sign. If Owner is a public body, attach evidence of authority to sign and resolution or other documents authorizing execution of this Agreement.)

CONTRACTOR:

By: _____

Title: _____

(If Contractor is a corporation, a partnership, or a joint venture, attach evidence of authority to sign.)

Attest: _____

Title: _____

Address for giving notices:

_____

_____

_____

License No.: _____

(where applicable)

NOTE TO USER: Use in those states or other jurisdictions where applicable or required.

EJCDC® C-520 (Rev. 1), Agreement Between Owner and Contractor for Construction Contract (Stipulated Price). Copyright © 2013 National Society of Professional Engineers, American Council of Engineering Companies, and American Society of Civil Engineers. All rights reserved.

DOCUMENT 00 55 00
NOTICE TO PROCEED

Project: 475 EAST CLOSURE PROJECT

Effective Date:

Owner: North Ogden City

Engineer: Eric Casperson, PE – North Ogden City Engineer

Contractor:

TO CONTRACTOR:

Owner hereby notifies Contractor that the Contract Times under the above Contract will commence to run on_____. *[see Paragraph 4.01 of the General Conditions]*

On that date, Contractor shall start performing its obligations under the Contract Documents. No Work shall be done at the Site prior to such date. In accordance with the Agreement, the date of Substantial Completion is **June 30, 2026**, and the date of readiness for final payment is June 30, 2026.

Before starting any Work at the Site, Contractor must comply with the following:

[Note any access limitations, security procedures, or other restrictions (e.g., NOI, bldg permit, TCP)]

Owner**:** North Ogden City

By: _____

Title: Mayor

Date Issued: _____

Copy: Engineer

EJCDC® C-550, Notice to Proceed.
Prepared and published 2013 by the Engineers Joint Contract Documents Committee.

DOCUMENT 00 61 13.13
PERFORMANCE BOND

CONTRACTOR *(name and address)*:

SURETY *(name and address of principal place of business)*:

OWNER *(name and address)*:

CONSTRUCTION CONTRACT
Effective Date of the Agreement:
Amount:
Description *(name and location)*:

BOND
Bond Number:
Date *(not earlier than the Effective Date of the Agreement of the Construction Contract)*:
Amount:
Modifications to this Bond Form: ☐ None ☐ See Paragraph 16

Surety and Contractor, intending to be legally bound hereby, subject to the terms set forth below, do each cause this Performance Bond to be duly executed by an authorized officer, agent, or representative.

CONTRACTOR AS PRINCIPAL	**SURETY**
_____ *(seal)*	_____ *(seal)*
Contractor's Name and Corporate Seal	Surety's Name and Corporate Seal
By: _____	**By:** _____
Signature	Signature (attach power of attorney)
_____	_____
Print Name	Print Name
_____	_____
Title	Title
Attest: _____	**Attest:** _____
Signature	Signature
_____	_____
Title	Title

Notes: (1) Provide supplemental execution by any additional parties, such as joint venturers. (2) Any singular reference to Contractor, Surety, Owner, or other party shall be considered plural where applicable.

1. The Contractor and Surety, jointly and severally, bind themselves, their heirs, executors, administrators, successors, and assigns to the Owner for the performance of the Construction Contract, which is incorporated herein by reference.

2. If the Contractor performs the Construction Contract, the Surety and the Contractor shall have no obligation under this Bond, except when applicable to participate in a conference as provided in Paragraph 3.

3. If there is no Owner Default under the Construction Contract, the Surety's obligation under this Bond shall arise after:

3.1 The Owner first provides notice to the Contractor and the Surety that the Owner is considering declaring a Contractor Default. Such notice shall indicate whether the Owner is requesting a conference among the Owner, Contractor, and Surety to discuss the Contractor's performance. If the Owner does not request a conference, the Surety may, within five (5) business days after receipt of the Owner's notice, request such a conference. If the Surety timely requests a conference, the Owner shall attend. Unless the Owner agrees otherwise, any conference requested under this Paragraph 3.1 shall be held within ten (10) business days of the Surety's receipt of the Owner's notice. If the Owner, the Contractor, and the Surety agree, the Contractor shall be allowed a reasonable time to perform the Construction Contract, but such an agreement shall not waive the Owner's right, if any, subsequently to declare a Contractor Default;

3.2 The Owner declares a Contractor Default, terminates the Construction Contract and notifies the Surety; and

3.3 The Owner has agreed to pay the Balance of the Contract Price in accordance with the terms of the Construction Contract to the Surety or to a contractor selected to perform the Construction Contract.

4. Failure on the part of the Owner to comply with the notice requirement in Paragraph 3.1 shall not constitute a failure to comply with a condition precedent to the Surety's obligations, or release the Surety from its obligations, except to the extent the Surety demonstrates actual prejudice.

5. When the Owner has satisfied the conditions of Paragraph 3, the Surety shall promptly and at the Surety's expense take one of the following actions:

5.1 Arrange for the Contractor, with the consent of the Owner, to perform and complete the Construction Contract;

5.2 Undertake to perform and complete the Construction Contract itself, through its agents or independent contractors;

5.3 Obtain bids or negotiated proposals from qualified contractors acceptable to the Owner for a contract for performance and completion of the Construction Contract, arrange for a contract to be prepared for execution by the Owner and a contractor selected with the Owners concurrence, to be secured with performance and payment bonds executed by a qualified surety equivalent to the bonds issued on the Construction Contract, and pay to the Owner the amount of damages as described in Paragraph 7 in excess of the Balance of the Contract Price incurred by the Owner as a result of the Contractor Default; or

5.4 Waive its right to perform and complete, arrange for completion, or obtain a new contractor, and with reasonable promptness under the circumstances:

5.4.1 After investigation, determine the amount for which it may be liable to the Owner and, as soon as practicable after the amount is determined, make payment to the Owner; or

5.4.2 Deny liability in whole or in part and notify the Owner, citing the reasons for denial.

6. If the Surety does not proceed as provided in Paragraph 5 with reasonable promptness, the Surety shall be deemed to be in default on this Bond seven days after receipt of an additional written notice from the Owner to the Surety demanding that the Surety perform its obligations under this Bond, and the Owner shall be entitled to enforce any remedy available to the Owner. If the Surety proceeds as provided in Paragraph 5.4, and the Owner refuses the payment or the Surety has denied liability, in whole or in part, without further notice the Owner shall be entitled to enforce any remedy available to the Owner.

7. If the Surety elects to act under Paragraph 5.1, 5.2, or 5.3, then the responsibilities of the Surety to the Owner shall not be greater than those of the Contractor under the Construction Contract, and the responsibilities of the Owner to the Surety shall not be greater than those of the Owner under the Construction Contract. Subject to the commitment by the Owner to pay the Balance of the Contract Price, the Surety is obligated, without duplication for:

7.1 the responsibilities of the Contractor for correction of defective work and completion of the Construction Contract;

7.2 additional legal, design professional, and delay costs resulting from the Contractor's Default, and resulting from the actions or failure to act of the Surety under Paragraph 5; and

7.3 liquidated damages, or if no liquidated damages are specified in the Construction Contract, actual damages caused by delayed performance or non-performance of the Contractor.

8. If the Surety elects to act under Paragraph 5.1, 5.3, or 5.4, the Surety's liability is limited to the amount of this Bond.

9. The Surety shall not be liable to the Owner or others for obligations of the Contractor that are unrelated to the Construction Contract, and the Balance of the Contract Price shall not be reduced or set off on account of any such unrelated obligations. No right of action shall accrue on this Bond to any person or entity other than the Owner or its heirs, executors, administrators, successors, and assigns.

10. The Surety hereby waives notice of any change, including changes of time, to the Construction Contract or to related subcontracts, purchase orders, and other obligations.

11. Any proceeding, legal or equitable, under this Bond may be instituted in any court of competent jurisdiction in the location in which the work or part of the work is located and shall be instituted within two years after a declaration of Contractor Default or within two years after the Contractor ceased working or within two years after the Surety refuses or fails to perform its obligations under this Bond, whichever occurs first. If the provisions of this paragraph are void or

prohibited by law, the minimum periods of limitations available to sureties as a defense in the jurisdiction of the suit shall be applicable.

12. Notice to the Surety, the Owner, or the Contractor shall be mailed or delivered to the address shown on the page on which their signature appears.

13. When this Bond has been furnished to comply with a statutory or other legal requirement in the location where the construction was to be performed, any provision in this Bond conflicting with said statutory or legal requirement shall be deemed deleted here from and provisions conforming to such statutory or other legal requirement shall be deemed incorporated herein. When so furnished, the intent is that this Bond shall be construed as a statutory bond and not as a common law bond.

14. Definitions

    14.1 Balance of the Contract Price: The total amount payable by the Owner to the Contractor under the Construction Contract after all proper adjustments have been made including allowance for the Contractor for any amounts received or to be received by the Owner in settlement of insurance or other claims for damages to which the Contractor is entitled, reduced by all valid and proper payments made to or on behalf of the Contractor under the Construction Contract.

    14.2 Construction Contract: The agreement between the Owner and Contractor identified on the cover page, including all Contract Documents and changes made to the agreement and the Contract Documents.

    14.3 Contractor Default: Failure of the Contractor, which has not been remedied or waived, to perform or otherwise to comply with a material term of the Construction Contract.

    14.4 Owner Default: Failure of the Owner, which has not been remedied or waived, to pay the Contractor as required under the Construction Contract or to perform and complete or comply with the other material terms of the Construction Contract.

    14.5 Contract Documents: All the documents that comprise the agreement between the Owner and Contractor.

15. If this Bond is issued for an agreement between a contractor and subcontractor, the term Contractor in this Bond shall be deemed to be Subcontractor and the term Owner shall be deemed to be Contractor.

16. Modifications to this Bond are as follows:

EJCDC® C-610, Performance Bond
Copyright © 2013 National Society of Professional Engineers, American Council of Engineering Companies, and American Society of Civil Engineers. All rights reserved

DOCUMENT 00 61 13.16
PAYMENT BOND

CONTRACTOR *(name and address)*:

SURETY *(name and address of principal place of business)*:

OWNER *(name and address)*:
CONSTRUCTION CONTRACT
Effective Date of the Agreement:
Amount:
Description *(name and location)*:

BOND
Bond Number:
Date *(not earlier than the Effective Date of the Agreement of the Construction Contract)*:
Amount:
Modifications to this Bond Form: ☐ None ☐ See Paragraph 18

Surety and Contractor, intending to be legally bound hereby, subject to the terms set forth below, do each cause this Payment Bond to be duly executed by an authorized officer, agent, or representative.

CONTRACTOR AS PRINCIPAL	**SURETY**
_____ *(seal)*	_____ *(seal)*
Contractor's Name and Corporate Seal	Surety's Name and Corporate Seal
By: _____	**By:** _____
Signature	Signature (attach power of attorney)
_____	_____
Print Name	Print Name
_____	_____
Title	Title
Attest: _____	**Attest:** _____
Signature	Signature
_____	_____
Title	Title

Notes: (1) Provide supplemental execution by any additional parties, such as joint venturers. (2) Any singular reference to Contractor, Surety, Owner, or other party shall be considered plural where applicable.

1. The Contractor and Surety, jointly and severally, bind themselves, their heirs, executors, administrators, successors, and assigns to the Owner to pay for labor, materials, and equipment furnished for use in the performance of the Construction Contract, which is incorporated herein by reference, subject to the following terms.
2. If the Contractor promptly makes payment of all sums due to Claimants, and defends, indemnifies, and holds harmless the Owner from claims, demands, liens, or suits by any person or entity seeking payment for labor, materials, or equipment furnished for use in the performance of the Construction Contract, then the Surety and the Contractor shall have no obligation under this Bond.
3. If there is no Owner Default under the Construction Contract, the Surety's obligation to the Owner under this Bond shall arise after the Owner has promptly notified the Contractor and the Surety (at the address described in Paragraph 13) of claims, demands, liens, or suits against the Owner or the Owner's property by any person or entity seeking payment for labor, materials, or equipment furnished for use in the performance of the Construction Contract, and tendered defense of such claims, demands, liens, or suits to the Contractor and the Surety.
4. When the Owner has satisfied the conditions in Paragraph 3, the Surety shall promptly and at the Surety's expense defend, indemnify, and hold harmless the Owner against a duly tendered claim, demand, lien, or suit.
5. The Surety's obligations to a Claimant under this Bond shall arise after the following:
   - 5.1 Claimants who do not have a direct contract with the Contractor,
     - 5.1.1 have furnished a written notice of non-payment to the Contractor, stating with substantial accuracy the amount claimed and the name of the party to whom the materials were, or equipment was, furnished or supplied or for whom the labor was done or performed, within ninety (90) days after having last performed labor or last furnished materials or equipment included in the Claim; and
     - 5.1.2 have sent a Claim to the Surety (at the address described in Paragraph 13).
   - 5.2 Claimants who are employed by or have a direct contract with the Contractor have sent a Claim to the Surety (at the address described in Paragraph 13).
6. If a notice of non-payment required by Paragraph 5.1.1 is given by the Owner to the Contractor, that is sufficient to satisfy a Claimant's obligation to furnish a written notice of non-payment under Paragraph 5.1.1.
7. When a Claimant has satisfied the conditions of Paragraph 5.1 or 5.2, whichever is applicable, the Surety shall promptly and at the Surety's expense take the following actions:
   - 7.1 Send an answer to the Claimant, with a copy to the Owner, within sixty (60) days after receipt of the Claim, stating the amounts that are undisputed and the basis for challenging any amounts that are disputed; and
   - 7.2 Pay or arrange for payment of any undisputed amounts.
   - 7.3 The Surety's failure to discharge its obligations under Paragraph 7.1 or 7.2 shall not be deemed to constitute a waiver of defenses the Surety or Contractor may have or acquire as to a Claim, except as to undisputed amounts for which the Surety and Claimant have reached agreement. If, however, the Surety fails to discharge its obligations under Paragraph 7.1 or 7.2, the Surety shall indemnify the Claimant for the reasonable attorney's fees the Claimant incurs thereafter to recover any sums found to be due and owing to the Claimant.
8. The Surety's total obligation shall not exceed the amount of this Bond, plus the amount of reasonable attorney's fees provided under Paragraph 7.3, and the amount of this Bond shall be credited for any payments made in good faith by the Surety.
9. Amounts owed by the Owner to the Contractor under the Construction Contract shall be used for the performance of the Construction Contract and to satisfy claims, if any, under any construction performance bond. By the Contractor furnishing and the Owner accepting this Bond, they agree that all funds earned by the Contractor in the performance of the Construction Contract are dedicated to satisfy obligations of the Contractor and Surety under this Bond, subject to the Owner's priority to use the funds for the completion of the work.
10. The Surety shall not be liable to the Owner, Claimants, or others for obligations of the Contractor that are unrelated to the Construction Contract. The Owner shall not be liable for the payment of any costs or expenses of any Claimant under this Bond, and shall have under this Bond no obligation to make payments to or give notice on behalf of Claimants, or otherwise have any obligations to Claimants under this Bond.
11. The Surety hereby waives notice of any change, including changes of time, to the Construction Contract or to related subcontracts, purchase orders, and other obligations.
12. No suit or action shall be commenced by a Claimant under this Bond other than in a court of competent jurisdiction in the state in which the project that is the subject of the Construction Contract is located or after the expiration of one year from the date (1) on which the Claimant sent a Claim to the Surety pursuant to Paragraph 5.1.2 or 5.2, or (2) on which the last labor or service was performed by anyone or the last materials or equipment were furnished by anyone under the Construction Contract, whichever of (1) or (2) first occurs. If the provisions of this paragraph are void or prohibited by law, the minimum period of limitation available to sureties as a defense in the jurisdiction of the

13. Notice and Claims to the Surety, the Owner, or the Contractor shall be mailed or delivered to the address shown on the page on which their signature appears. Actual receipt of notice or Claims, however accomplished, shall be sufficient compliance as of the date received.
14. When this Bond has been furnished to comply with a statutory or other legal requirement in the location where the construction was to be performed, any provision in this Bond conflicting with said statutory or legal requirement shall be deemed deleted here from and provisions conforming to such statutory or other legal requirement shall be deemed incorporated herein. When so furnished, the intent is that this Bond shall be construed as a statutory bond and not as a common law bond.
15. Upon requests by any person or entity appearing to be a potential beneficiary of this Bond, the Contractor and Owner shall promptly furnish a copy of this Bond or shall permit a copy to be made.
16. **Definitions**

    16.1 **Claim:** A written statement by the Claimant including at a minimum:

    1. The name of the Claimant;
    2. The name of the person for whom the labor was done, or materials or equipment furnished;
    3. A copy of the agreement or purchase order pursuant to which labor, materials, or equipment was furnished for use in the performance of the Construction Contract;
    4. A brief description of the labor, materials, or equipment furnished;
    5. The date on which the Claimant last performed labor or last furnished materials or equipment for use in the performance of the Construction Contract;
    6. The total amount earned by the Claimant for labor, materials, or equipment furnished as of the date of the Claim;
    7. The total amount of previous payments received by the Claimant; and
    8. The total amount due and unpaid to the Claimant for labor, materials, or equipment furnished as of the date of the Claim.

    16.2 **Claimant:** An individual or entity having a direct contract with the Contractor or with a subcontractor of the Contractor to furnish labor, materials, or equipment for use in the performance of the Construction Contract. The term Claimant also includes any individual or entity that has rightfully asserted a claim under an applicable mechanic's lien or similar statute against the real property upon which the Project is located. The intent of this Bond shall be to include without limitation in the terms of "labor, materials, or equipment" that part of the water, gas, power, light, heat, oil, gasoline, telephone service, or rental equipment used in the Construction Contract, architectural and engineering services required for performance of the work of the Contractor and the Contractor's subcontractors, and all other items for which a mechanic's lien may be asserted in the jurisdiction where the labor, materials, or equipment were furnished.

    16.3 **Construction Contract:** The agreement between the Owner and Contractor identified on the cover page, including all Contract Documents and all changes made to the agreement and the Contract Documents.

    16.4 **Owner Default**: Failure of the Owner, which has not been remedied or waived, to pay the Contractor as required under the Construction Contract or to perform and complete or comply with the other material terms of the Construction Contract.

    16.5 **Contract Documents:** All the documents that comprise the agreement between the Owner and Contractor.
17. If this Bond is issued for an agreement between a contractor and subcontractor, the term Contractor in this Bond shall be deemed to be Subcontractor and the term Owner shall be deemed to be Contractor.
18. Modifications to this Bond are as follows:

EJCDC® C-615, Payment Bond
Copyright © 2013 National Society of Professional Engineers, American Council of Engineering Companies, and American Society of Civil Engineers. All rights reserved.

Document 00 61 13.19
WARRANTY BOND

Contractor	**Surety**
Name: Address *(principal place of business)*:	Name: Address *(principal place of business)*:
Owner Name: Address *(principal place of business)*:	**Construction Contract** Description *(name and location)*: Contract Price: Effective Date of Contract: Contract's Date of Substantial Completion:
Bond Bond Amount: _____ Date of Bond: _____ Modifications to this Bond form: ☐ None ☐ See Item 8	Bond Period: Commencing on the date of Substantial Completion of the Work under the Construction Contract and continuing until 1 year after such Substantial Completion.

Surety and Contractor, intending to be legally bound hereby, subject to the terms set forth herein, do each cause this Warranty Bond to be duly executed by an authorized officer, agent, or representative.

Contractor as Principal	**Surety**
_____ *(Full formal name of Contractor)*	_____ *(Full formal name of Surety) (corporate seal)*
By: _____ *(Signature)*	By: _____ *(Signature) (Attach Power of Attorney)*
Name: _____	Name: _____
Title: _____	Title: _____
Attest: _____ *(Signature)*	Attest: _____ *(Signature)*
Name: _____	Name: _____
Title: _____	Title: _____

The Contractor and Surety, jointly and severally, bind themselves, their heirs, executors, administrators, successors, and assigns to the Owner for the performance of the Construction Contract's Correction Period Obligations. The Construction Contract is incorporated herein by reference.

1. If the Contractor performs the Correction Period Obligations, the Surety and the Contractor shall have no obligation under this Warranty Bond.

2. If Owner gives written notice to Contractor and Surety during the Bond Period of Contractor's obligation under the Correction Period Obligations, and Contractor does not fulfill such obligation, then Surety shall be responsible for fulfillment of such Correction Period Obligations. Surety shall either fulfill the Correction Period Obligations itself, through its agents or contractors, or, in the alternative, Surety may waive the right to fulfill the Correction Period Obligations itself, and reimburse the Owner for all resulting costs incurred by Owner in performing Contractor's Correction Period Obligations, including but not limited to correction, removal, replacement, and repair costs.

3. The Surety's liability is limited to the amount of this Warranty Bond. Renewal or continuation of the Warranty Bond will not modify such amount, unless expressly agreed to by Surety in writing.

4. The Surety shall have no liability under this Warranty Bond for obligations of the Contractor that are unrelated to the Construction Contract. No right of action will accrue on this Warranty Bond to any person or entity other than the Owner or its heirs, executors, administrators, successors, and assigns.

5. Any proceeding, legal or equitable, under this Warranty Bond may be instituted in any court of competent jurisdiction in the location in which the Work or part of the Work is located and must be instituted within two years after the Surety refuses or fails to perform its obligations under this Warranty Bond.

6. Written notice to the Surety, the Owner, or the Contractor must be mailed or delivered to the address shown in this Warranty Bond.

7. Definitions

   7.1. *Construction Contract*—The agreement between the Owner and Contractor identified on the cover page of this Warranty Bond, including all Contract Documents and changes made to the agreement and the Contract Documents.

   7.2. *Contract Documents*—All the documents that comprise the agreement between the Owner and Contractor.

   7.3. *Correction Period Obligations*—The duties, responsibilities, commitments, and obligations of the Contractor with respect to correction or replacement of defective Work, as set forth in the Construction Contract's Correction Period clause, EJCDC® C-700, Standard General Conditions of the Construction Contract (2018), Paragraph 15.08, as duly modified.

   7.4. *Substantial Completion*—As defined in the Construction Contract.

   7.5. *Work*—As defined in the Construction Contract.

8. Modifications to this Bond are as follows:

EJCDC® C 612, Warranty Bond. Copyright© 2018 National Society of Professional Engineers, American Council of Engineering Companies, and American Society of Civil Engineers. All rights reserved.

DOCUMENT 00 62 16
CERTIFICATE OF INSURANCE

PART 1 GENERAL

1.1 PROCEDURE

A. For filing purposes, add Certificate of Insurance to the Contract Documents following this page.

END OF DOCUMENT

Part 3: Conditions of the Contract

STANDARD GENERAL CONDITIONS OF THE CONSTRUCTION CONTRACT

Prepared by

Issued and Published Jointly by

Endorsed by

EJCDC® C-700 (Rev. 1), Standard General Conditions of the Construction Contract.
Copyright © 2013 National Society of Professional Engineers, American Council of Engineering Companies, and American Society of Civil Engineers. All rights reserved.

Copyright © 2013:

National Society of Professional Engineers
1420 King Street, Alexandria, VA 22314-2794
(703) 684-2882
www.nspe.org

American Council of Engineering Companies
1015 15th Street N.W., Washington, DC 20005
(202) 347-7474
www.acec.org

American Society of Civil Engineers
1801 Alexander Bell Drive, Reston, VA 20191-4400
(800) 548-2723
www.asce.org

The copyright for this document is owned jointly by the three sponsoring organizations listed above. The National Society of Professional Engineers is the Copyright Administrator for the EJCDC documents; please direct all inquiries regarding EJCDC copyrights to NSPE.

NOTE: EJCDC publications may be purchased at www.ejcdc.org, or from any of the sponsoring organizations above.

Copyright © 2013 National Society of Professional Engineers, American Council of Engineering Companies, and American Society of Civil Engineers. All rights reserved.

STANDARD GENERAL CONDITIONS OF THE CONSTRUCTION CONTRACT

TABLE OF CONTENTS

Page

ARTICLE 1 – Definitions and Terminology 1

1.1 Defined Terms 1

1.2 Terminology 5

ARTICLE 2 – Preliminary Matters 6

2.1 Delivery of Bonds and Evidence of Insurance 6

2.2 Copies of Documents 7

2.3 Before Starting Construction 7

2.4 Preconstruction Conference; Designation of Authorized Representatives 7

2.5 Initial Acceptance of Schedules 8

2.6 Electronic Transmittals 8

ARTICLE 3 – Documents: Intent, Requirements, Reuse 9

3.1 Intent 9

3.2 Reference Standards 9

3.3 Reporting and Resolving Discrepancies 9

3.4 Requirements of the Contract Documents 10

3.5 Reuse of Documents 11

ARTICLE 4 – Commencement and Progress of the Work 11

4.1 Commencement of Contract Times; Notice to Proceed 11

4.2 Starting the Work 11

4.3 Reference Points 11

4.4 Progress Schedule 12

4.5 Delays in Contractor's Progress 12

ARTICLE 5 – Availability of Lands; Subsurface and Physical Conditions; Hazardous Environmental Conditions 13

5.1 Availability of Lands 13

5.2 Use of Site and Other Areas 13

5.3 Subsurface and Physical Conditions 15

5.4 Differing Subsurface or Physical Conditions 15

5.5 Underground Facilities 17

5.6 Hazardous Environmental Conditions at Site 19

Copyright © 2013 National Society of Professional Engineers, American Council of Engineering Companies, and American Society of Civil Engineers. All rights reserved.

ARTICLE 6 – Bonds and Insurance 21
6.1 Performance, Payment, and Other Bonds 21
6.2 Insurance—General Provisions 22
6.3 Contractor's Insurance 23
6.4 Owner's Liability Insurance 25
6.5 Property Insurance 25
6.6 Waiver of Rights 27
6.7 Receipt and Application of Property Insurance Proceeds 29
ARTICLE 7 – Contractor's Responsibilities 29
7.1 Supervision and Superintendence 29
7.2 Labor; Working Hours 29
7.3 Services, Materials, and Equipment 30
7.4 "Or Equals" 30
7.5 Substitutes 31
7.6 Concerning Subcontractors, Suppliers, and Others 33
7.7 Patent Fees and Royalties 34
7.8 Permits 35
7.9 Taxes 35
7.10 Laws and Regulations 35
7.11 Record Documents 36
7.12 Safety and Protection 36
7.13 Safety Representative 37
7.14 Hazard Communication Programs 38
7.15 Emergencies 38
7.16 Shop Drawings, Samples, and Other Submittals 38
7.17 Contractor's General Warranty and Guarantee 40
7.18 Indemnification 41
7.19 Delegation of Professional Design Services 42
ARTICLE 8 – Other Work at the Site 43
8.1 Other Work 43
8.2 Coordination 43
8.3 Legal Relationships 44
ARTICLE 9 – Owner's Responsibilities 45
9.1 Communications to Contractor 45

Copyright © 2013 National Society of Professional Engineers, American Council of Engineering Companies, and American Society of Civil Engineers. All rights reserved.

9.2 Replacement of Engineer 45
9.3 Furnish Data 45
9.4 Pay When Due 45
9.5 Lands and Easements; Reports, Tests, and Drawings 45
9.6 Insurance 45
9.7 Change Orders 46
9.8 Inspections, Tests, and Approvals 46
9.9 Limitations on Owner's Responsibilities 46
9.10 Undisclosed Hazardous Environmental Condition 46
9.11 Evidence of Financial Arrangements 46
9.12 Safety Programs 46
ARTICLE 10 – Engineer's Status During Construction 46
10.1 Owner's Representative 46
10.2 Visits to Site 46
10.3 Project Representative 47
10.4 Rejecting Defective Work 47
10.5 Shop Drawings, Change Orders and Payments 47
10.6 Determinations for Unit Price Work 47
10.7 Decisions on Requirements of Contract Documents and Acceptability of Work 48
10.8 Limitations on Engineer's Authority and Responsibilities 48
10.9 Compliance with Safety Program 48
ARTICLE 11 – Amending the Contract Documents; Changes in the Work 49
11.1 Amending and Supplementing Contract Documents 49
11.2 Owner-Authorized Changes in the Work 49
11.3 Unauthorized Changes in the Work 50
11.4 Change of Contract Price 50
11.5 Change of Contract Times 51
11.6 Change Proposals 51
11.7 Execution of Change Orders 52
11.8 Notification to Surety 53
ARTICLE 12 – Claims 53
12.01 Claims 53
ARTICLE 13 – Cost of the Work; Allowances; Unit Price Work 54
13.1 Cost of the Work 54

Copyright © 2013 National Society of Professional Engineers, American Council of Engineering Companies, and American Society of Civil Engineers. All rights reserved.

13.2 Allowances 57
13.3 Unit Price Work 57
ARTICLE 14 – Tests and Inspections; Correction, Removal or Acceptance of Defective Work..... 58
14.1 Access to Work 58
14.2 Tests, Inspections, and Approvals 58
14.3 Defective Work 59
14.4 Acceptance of Defective Work 60
14.5 Uncovering Work 60
14.6 Owner May Stop the Work 61
14.7 Owner May Correct Defective Work 61
ARTICLE 15 – Payments to Contractor; Set-Offs; Completion; Correction Period 62
15.1 Progress Payments 62
15.2 Contractor's Warranty of Title 65
15.3 Substantial Completion 65
15.4 Partial Use or Occupancy 66
15.5 Final Inspection 67
15.6 Final Payment 67
15.7 Waiver of Claims 68
15.8 Correction Period 69
ARTICLE 16 – Suspension of Work and Termination 70
16.1 Owner May Suspend Work 70
16.2 Owner May Terminate for Cause 70
16.3 Owner May Terminate For Convenience 71
16.4 Contractor May Stop Work or Terminate 71
ARTICLE 17 – Final Resolution of Disputes 72
17.01 Methods and Procedures 72
ARTICLE 18 – Miscellaneous 72
18.1 Giving Notice 72
18.2 Computation of Times 73
18.3 Cumulative Remedies 73
18.4 Limitation of Damages 73
18.5 No Waiver 73
18.6 Survival of Obligations 73
18.7 Controlling Law 73

Copyright © 2013 National Society of Professional Engineers, American Council of Engineering Companies, and American Society of Civil Engineers. All rights reserved.

18.8 Headings 73

Copyright © 2013 National Society of Professional Engineers, American Council of Engineering Companies,
and American Society of Civil Engineers. All rights reserved.

ARTICLE 1 – DEFINITIONS AND TERMINOLOGY

1.1 *Defined Terms*

A. Wherever used in the Bidding Requirements or Contract Documents, a term printed with initial capital letters, including the term's singular and plural forms, will have the meaning indicated in the definitions below. In addition to terms specifically defined, terms with initial capital letters in the Contract Documents include references to identified articles and paragraphs, and the titles of other documents or forms.

1. *Addenda*—Written or graphic instruments issued prior to the opening of Bids which clarify, correct, or change the Bidding Requirements or the proposed Contract Documents.

2. *Agreement*—The written instrument, executed by Owner and Contractor, that sets forth the Contract Price and Contract Times, identifies the parties and the Engineer, and designates the specific items that are Contract Documents.

3. *Application for Payment*—The form acceptable to Engineer which is to be used by Contractor during the course of the Work in requesting progress or final payments and which is to be accompanied by such supporting documentation as is required by the Contract Documents.

4. *Bid*—The offer of a Bidder submitted on the prescribed form setting forth the prices for the Work to be performed.

5. *Bidder*—An individual or entity that submits a Bid to Owner.

6. *Bidding Documents*—The Bidding Requirements, the proposed Contract Documents, and all Addenda.

7. *Bidding Requirements*—The advertisement or invitation to bid, Instructions to Bidders, Bid Bond or other Bid security, if any, the Bid Form, and the Bid with any attachments.

8. *Change Order*—A document which is signed by Contractor and Owner and authorizes an addition, deletion, or revision in the Work or an adjustment in the Contract Price or the Contract Times, or other revision to the Contract, issued on or after the Effective Date of the Contract.

9. *Change Proposal*—A written request by Contractor, duly submitted in compliance with the procedural requirements set forth herein, seeking an adjustment in Contract Price or Contract Times, or both; contesting an initial decision by Engineer concerning the requirements of the Contract Documents or the acceptability of Work under the Contract Documents; challenging a set-off against payments due; or seeking other relief with respect to the terms of the Contract.

10. *Claim*—(a) A demand or assertion by Owner directly to Contractor, duly submitted in compliance with the procedural requirements set forth herein: seeking an adjustment of Contract Price or Contract Times, or both; contesting an initial decision by Engineer concerning the requirements of the Contract Documents or the acceptability of Work

Copyright © 2013 National Society of Professional Engineers, American Council of Engineering Companies, and American Society of Civil Engineers. All rights reserved.

under the Contract Documents; contesting Engineer's decision regarding a Change Proposal; seeking resolution of a contractual issue that Engineer has declined to address; or seeking other relief with respect to the terms of the Contract; or (b) a demand or assertion by Contractor directly to Owner, duly submitted in compliance with the procedural requirements set forth herein, contesting Engineer's decision regarding a Change Proposal; or seeking resolution of a contractual issue that Engineer has declined to address. A demand for money or services by a third party is not a Claim.

11. *Constituent of Concern*—Asbestos, petroleum, radioactive materials, polychlorinated biphenyls (PCBs), hazardous waste, and any substance, product, waste, or other material of any nature whatsoever that is or becomes listed, regulated, or addressed pursuant to (a) the Comprehensive Environmental Response, Compensation and Liability Act, 42 U.S.C. §§9601 et seq. ("CERCLA"); (b) the Hazardous Materials Transportation Act, 49 U.S.C. §§5101 et seq.; (c) the Resource Conservation and Recovery Act, 42 U.S.C. §§6901 et seq. ("RCRA"); (d) the Toxic Substances Control Act, 15 U.S.C. §§2601 et seq.; (e) the Clean Water Act, 33 U.S.C. §§1251 et seq.; (f) the Clean Air Act, 42 U.S.C. §§7401 et seq.; or (g) any other federal, state, or local statute, law, rule, regulation, ordinance, resolution, code, order, or decree regulating, relating to, or imposing liability or standards of conduct concerning, any hazardous, toxic, or dangerous waste, substance, or material.

12. *Contract*—The entire and integrated written contract between the Owner and Contractor concerning the Work.

13. *Contract Documents*—Those items so designated in the Agreement, and which together comprise the Contract.

14. *Contract Price*—The money that Owner has agreed to pay Contractor for completion of the Work in accordance with the Contract Documents. .

15. *Contract Times*—The number of days or the dates by which Contractor shall: (a) achieve Milestones, if any; (b) achieve Substantial Completion; and (c) complete the Work.

16. *Contractor*—The individual or entity with which Owner has contracted for performance of the Work.

17. *Cost of the Work*—See Paragraph 13.01 for definition.

18. *Drawings*—The part of the Contract that graphically shows the scope, extent, and character of the Work to be performed by Contractor.

19. *Effective Date of the Contract*—The date, indicated in the Agreement, on which the Contract becomes effective.

20. *Engineer*—The individual or entity named as such in the Agreement.

21. *Field Order*—A written order issued by Engineer which requires minor changes in the Work but does not change the Contract Price or the Contract Times.

Copyright © 2013 National Society of Professional Engineers, American Council of Engineering Companies, and American Society of Civil Engineers. All rights reserved.

22. *Hazardous Environmental Condition*—The presence at the Site of Constituents of Concern in such quantities or circumstances that may present a danger to persons or property exposed thereto. The presence at the Site of materials that are necessary for the execution of the Work, or that are to be incorporated in the Work, and that are controlled and contained pursuant to industry practices, Laws and Regulations, and the requirements of the Contract, does not establish a Hazardous Environmental Condition.

23. *Laws and Regulations; Laws or Regulations*—Any and all applicable laws, statutes, rules, regulations, ordinances, codes, and orders of any and all governmental bodies, agencies, authorities, and courts having jurisdiction.

24. *Liens*—Charges, security interests, or encumbrances upon Contract-related funds, real property, or personal property.

25. *Milestone*—A principal event in the performance of the Work that the Contract requires Contractor to achieve by an intermediate completion date or by a time prior to Substantial Completion of all the Work.

26. *Notice of Award*—The written notice by Owner to a Bidder of Owner's acceptance of the Bid.

27. *Notice to Proceed*—A written notice by Owner to Contractor fixing the date on which the Contract Times will commence to run and on which Contractor shall start to perform the Work.

28. *Owner*—The individual or entity with which Contractor has contracted regarding the Work, and which has agreed to pay Contractor for the performance of the Work, pursuant to the terms of the Contract.

29. *Progress Schedule*—A schedule, prepared and maintained by Contractor, describing the sequence and duration of the activities comprising the Contractor's plan to accomplish the Work within the Contract Times.

30. *Project*—The total undertaking to be accomplished for Owner by engineers, contractors, and others, including planning, study, design, construction, testing, commissioning, and start-up, and of which the Work to be performed under the Contract Documents is a part.

31. *Project Manual*—The written documents prepared for, or made available for, procuring and constructing the Work, including but not limited to the Bidding Documents or other construction procurement documents, geotechnical and existing conditions information, the Agreement, bond forms, General Conditions, Supplementary Conditions, and Specifications. The contents of the Project Manual may be bound in one or more volumes.

32. *Resident Project Representative*—The authorized representative of Engineer assigned to assist Engineer at the Site. As used herein, the term Resident Project Representative or "RPR" includes any assistants or field staff of Resident Project Representative.

Copyright © 2013 National Society of Professional Engineers, American Council of Engineering Companies, and American Society of Civil Engineers. All rights reserved.

33. *Samples*—Physical examples of materials, equipment, or workmanship that are representative of some portion of the Work and that establish the standards by which such portion of the Work will be judged.

34. *Schedule of Submittals*—A schedule, prepared and maintained by Contractor, of required submittals and the time requirements for Engineer's review of the submittals and the performance of related construction activities.

35. *Schedule of Values*—A schedule, prepared and maintained by Contractor, allocating portions of the Contract Price to various portions of the Work and used as the basis for reviewing Contractor's Applications for Payment.

36. *Shop Drawings*—All drawings, diagrams, illustrations, schedules, and other data or information that are specifically prepared or assembled by or for Contractor and submitted by Contractor to illustrate some portion of the Work. Shop Drawings, whether approved or not, are not Drawings and are not Contract Documents.

37. *Site*—Lands or areas indicated in the Contract Documents as being furnished by Owner upon which the Work is to be performed, including rights-of-way and easements, and such other lands furnished by Owner which are designated for the use of Contractor.

38. *Specifications*—The part of the Contract that consists of written requirements for materials, equipment, systems, standards, and workmanship as applied to the Work, and certain administrative requirements and procedural matters applicable to the Work.

39. *Subcontractor*—An individual or entity having a direct contract with Contractor or with any other Subcontractor for the performance of a part of the Work.

40. *Substantial Completion*—The time at which the Work (or a specified part thereof) has progressed to the point where, in the opinion of Engineer, the Work (or a specified part thereof) is sufficiently complete, in accordance with the Contract Documents, so that the Work (or a specified part thereof) can be utilized for the purposes for which it is intended. The terms "substantially complete" and "substantially completed" as applied to all or part of the Work refer to Substantial Completion thereof.

41. *Successful Bidder*—The Bidder whose Bid the Owner accepts, and to which the Owner makes an award of contract, subject to stated conditions.

42. *Supplementary Conditions*—The part of the Contract that amends or supplements these General Conditions.

43. *Supplier*—A manufacturer, fabricator, supplier, distributor, materialman, or vendor having a direct contract with Contractor or with any Subcontractor to furnish materials or equipment to be incorporated in the Work by Contractor or a Subcontractor.

44. *Technical Data*—Those items expressly identified as Technical Data in the Supplementary Conditions, with respect to either (a) subsurface conditions at the Site, or physical conditions relating to existing surface or subsurface structures at the Site (except Underground Facilities) or (b) Hazardous Environmental Conditions at the Site.

Copyright © 2013 National Society of Professional Engineers, American Council of Engineering Companies, and American Society of Civil Engineers. All rights reserved.

If no such express identifications of Technical Data have been made with respect to conditions at the Site, then the data contained in boring logs, recorded measurements of subsurface water levels, laboratory test results, and other factual, objective information regarding conditions at the Site that are set forth in any geotechnical or environmental report prepared for the Project and made available to Contractor are hereby defined as Technical Data with respect to conditions at the Site under Paragraphs 5.03, 5.04, and 5.06.

45. *Underground Facilities*—All underground pipelines, conduits, ducts, cables, wires, manholes, vaults, tanks, tunnels, or other such facilities or attachments, and any encasements containing such facilities, including but not limited to those that convey electricity, gases, steam, liquid petroleum products, telephone or other communications, fiber optic transmissions, cable television, water, wastewater, storm water, other liquids or chemicals, or traffic or other control systems.

46. *Unit Price Work*—Work to be paid for on the basis of unit prices.

47. *Work*—The entire construction or the various separately identifiable parts thereof required to be provided under the Contract Documents. Work includes and is the result of performing or providing all labor, services, and documentation necessary to produce such construction; furnishing, installing, and incorporating all materials and equipment into such construction; and may include related services such as testing, start-up, and commissioning, all as required by the Contract Documents.

48. *Work Change Directive*—A written directive to Contractor issued on or after the Effective Date of the Contract, signed by Owner and recommended by Engineer, ordering an addition, deletion, or revision in the Work.

1.2 *Terminology*

A. The words and terms discussed in the following paragraphs are not defined but, when used in the Bidding Requirements or Contract Documents, have the indicated meaning.

B. *Intent of Certain Terms or Adjectives*:

1. The Contract Documents include the terms “as allowed,” “as approved,” “as ordered,” “as directed” or terms of like effect or import to authorize an exercise of professional judgment by Engineer. In addition, the adjectives “reasonable,” “suitable,” “acceptable,” “proper,” “satisfactory,” or adjectives of like effect or import are used to describe an action or determination of Engineer as to the Work. It is intended that such exercise of professional judgment, action, or determination will be solely to evaluate, in general, the Work for compliance with the information in the Contract Documents and with the design concept of the Project as a functioning whole as shown or indicated in the Contract Documents (unless there is a specific statement indicating otherwise). The use of any such term or adjective is not intended to and shall not be effective to assign to Engineer any duty or authority to supervise or direct the performance of the Work, or any duty or authority to undertake responsibility

Copyright © 2013 National Society of Professional Engineers, American Council of Engineering Companies, and American Society of Civil Engineers. All rights reserved.

contrary to the provisions of Article 10 or any other provision of the Contract Documents.

C. *Day*:

1. The word "day" means a calendar day of 24 hours measured from midnight to the next midnight.

D. *Defective*:

1. The word "defective," when modifying the word "Work," refers to Work that is unsatisfactory, faulty, or deficient in that it:

   a. does not conform to the Contract Documents; or

   b. does not meet the requirements of any applicable inspection, reference standard, test, or approval referred to in the Contract Documents; or

   c. has been damaged prior to Engineer's recommendation of final payment (unless responsibility for the protection thereof has been assumed by Owner at Substantial Completion in accordance with Paragraph 15.03 or 15.04).

E. *Furnish, Install, Perform, Provide*:

1. The word "furnish," when used in connection with services, materials, or equipment, shall mean to supply and deliver said services, materials, or equipment to the Site (or some other specified location) ready for use or installation and in usable or operable condition.

2. The word "install," when used in connection with services, materials, or equipment, shall mean to put into use or place in final position said services, materials, or equipment complete and ready for intended use.

3. The words "perform" or "provide," when used in connection with services, materials, or equipment, shall mean to furnish and install said services, materials, or equipment complete and ready for intended use.

4. If the Contract Documents establish an obligation of Contractor with respect to specific services, materials, or equipment, but do not expressly use any of the four words "furnish," "install," "perform," or "provide," then Contractor shall furnish and install said services, materials, or equipment complete and ready for intended use.

F. Unless stated otherwise in the Contract Documents, words or phrases that have a well-known technical or construction industry or trade meaning are used in the Contract Documents in accordance with such recognized meaning.

ARTICLE 2 – PRELIMINARY MATTERS

2.1 *Delivery of Bonds and Evidence of Insurance*

A. *Bonds*: When Contractor delivers the executed counterparts of the Agreement to Owner, Contractor shall also deliver to Owner such bonds as Contractor may be required to furnish.

Copyright © 2013 National Society of Professional Engineers, American Council of Engineering Companies, and American Society of Civil Engineers. All rights reserved.

B. *Evidence of Contractor's Insurance*: When Contractor delivers the executed counterparts of the Agreement to Owner, Contractor shall also deliver to Owner, with copies to each named insured and additional insured (as identified in the Supplementary Conditions or elsewhere in the Contract), the certificates and other evidence of insurance required to be provided by Contractor in accordance with Article 6.

C. *Evidence of Owner's Insurance*: After receipt of the executed counterparts of the Agreement and all required bonds and insurance documentation, Owner shall promptly deliver to Contractor, with copies to each named insured and additional insured (as identified in the Supplementary Conditions or otherwise), the certificates and other evidence of insurance required to be provided by Owner under Article 6.

2.2 *Copies of Documents*

A. Owner shall furnish to Contractor four printed copies of the Contract (including one fully executed counterpart of the Agreement), and one copy in electronic portable document format (PDF). Additional printed copies will be furnished upon request at the cost of reproduction.

B. Owner shall maintain and safeguard at least one original printed record version of the Contract, including Drawings and Specifications signed and sealed by Engineer and other design professionals. Owner shall make such original printed record version of the Contract available to Contractor for review. Owner may delegate the responsibilities under this provision to Engineer.

2.3 *Before Starting Construction*

A. *Preliminary Schedules*: Within 10 days after the Effective Date of the Contract (or as otherwise specifically required by the Contract Documents), Contractor shall submit to Engineer for timely review:

1. a preliminary Progress Schedule indicating the times (numbers of days or dates) for starting and completing the various stages of the Work, including any Milestones specified in the Contract;

2. a preliminary Schedule of Submittals; and

3. a preliminary Schedule of Values for all of the Work which includes quantities and prices of items which when added together equal the Contract Price and subdivides the Work into component parts in sufficient detail to serve as the basis for progress payments during performance of the Work. Such prices will include an appropriate amount of overhead and profit applicable to each item of Work.

2.4 *Preconstruction Conference; Designation of Authorized Representatives*

A. Before any Work at the Site is started, a conference attended by Owner, Contractor, Engineer, and others as appropriate will be held to establish a working understanding among the parties as to the Work and to discuss the schedules referred to in Paragraph 2.03.A, procedures for handling Shop Drawings, Samples, and other submittals, processing

Copyright © 2013 National Society of Professional Engineers, American Council of Engineering Companies, and American Society of Civil Engineers. All rights reserved.

Applications for Payment, electronic or digital transmittals, and maintaining required records.

B. At this conference Owner and Contractor each shall designate, in writing, a specific individual to act as its authorized representative with respect to the services and responsibilities under the Contract. Such individuals shall have the authority to transmit and receive information, render decisions relative to the Contract, and otherwise act on behalf of each respective party.

2.5 *Initial Acceptance of Schedules*

A. At least 10 days before submission of the first Application for Payment a conference, attended by Contractor, Engineer, and others as appropriate, will be held to review for acceptability to Engineer as provided below the schedules submitted in accordance with Paragraph 2.03.A. Contractor shall have an additional 10 days to make corrections and adjustments and to complete and resubmit the schedules. No progress payment shall be made to Contractor until acceptable schedules are submitted to Engineer.

1. The Progress Schedule will be acceptable to Engineer if it provides an orderly progression of the Work to completion within the Contract Times. Such acceptance will not impose on Engineer responsibility for the Progress Schedule, for sequencing, scheduling, or progress of the Work, nor interfere with or relieve Contractor from Contractor's full responsibility therefore.

2. Contractor's Schedule of Submittals will be acceptable to Engineer if it provides a workable arrangement for reviewing and processing the required submittals.

3. Contractor's Schedule of Values will be acceptable to Engineer as to form and substance if it provides a reasonable allocation of the Contract Price to the component parts of the Work.

2.6 *Electronic Transmittals*

A. Except as otherwise stated elsewhere in the Contract, the Owner, Engineer, and Contractor may transmit, and shall accept, Project-related correspondence, text, data, documents, drawings, information, and graphics, including but not limited to Shop Drawings and other submittals, in electronic media or digital format, either directly, or through access to a secure Project website.

B. If the Contract does not establish protocols for electronic or digital transmittals, then Owner, Engineer, and Contractor shall jointly develop such protocols.

C. When transmitting items in electronic media or digital format, the transmitting party makes no representations as to long term compatibility, usability, or readability of the items resulting from the recipient's use of software application packages, operating systems, or computer hardware differing from those used in the drafting or transmittal of the items, or from those established in applicable transmittal protocols.

Copyright © 2013 National Society of Professional Engineers, American Council of Engineering Companies, and American Society of Civil Engineers. All rights reserved.

ARTICLE 3 – DOCUMENTS: INTENT, REQUIREMENTS, REUSE

3.1 *Intent*

A. The Contract Documents are complementary; what is required by one is as binding as if required by all.

B. It is the intent of the Contract Documents to describe a functionally complete project (or part thereof) to be constructed in accordance with the Contract Documents.

C. Unless otherwise stated in the Contract Documents, if there is a discrepancy between the electronic or digital versions of the Contract Documents (including any printed copies derived from such electronic or digital versions) and the printed record version, the printed record version shall govern.

D. The Contract supersedes prior negotiations, representations, and agreements, whether written or oral.

E. Engineer will issue clarifications and interpretations of the Contract Documents as provided herein.

3.2 *Reference Standards*

A. Standards Specifications, Codes, Laws and Regulations

1. Reference in the Contract Documents to standard specifications, manuals, reference standards, or codes of any technical society, organization, or association, or to Laws or Regulations, whether such reference be specific or by implication, shall mean the standard specification, manual, reference standard, code, or Laws or Regulations in effect at the time of opening of Bids (or on the Effective Date of the Contract if there were no Bids), except as may be otherwise specifically stated in the Contract Documents.

2. No provision of any such standard specification, manual, reference standard, or code, or any instruction of a Supplier, shall be effective to change the duties or responsibilities of Owner, Contractor, or Engineer, or any of their subcontractors, consultants, agents, or employees, from those set forth in the part of the Contract Documents prepared by or for Engineer. No such provision or instruction shall be effective to assign to Owner, Engineer, or any of their officers, directors, members, partners, employees, agents, consultants, or subcontractors, any duty or authority to supervise or direct the performance of the Work or any duty or authority to undertake responsibility inconsistent with the provisions of the part of the Contract Documents prepared by or for Engineer.

3.3 *Reporting and Resolving Discrepancies*

A. *Reporting Discrepancies*:

1. *Contractor's Verification of Figures and Field Measurements*: Before undertaking each part of the Work, Contractor shall carefully study the Contract Documents, and check and verify pertinent figures and dimensions therein, particularly with respect to

Copyright © 2013 National Society of Professional Engineers, American Council of Engineering Companies, and American Society of Civil Engineers. All rights reserved.

applicable field measurements. Contractor shall promptly report in writing to Engineer any conflict, error, ambiguity, or discrepancy that Contractor discovers, or has actual knowledge of, and shall not proceed with any Work affected thereby until the conflict, error, ambiguity, or discrepancy is resolved, by a clarification or interpretation by Engineer, or by an amendment or supplement to the Contract Documents issued pursuant to Paragraph 11.01.

2. *Contractor's Review of Contract Documents*: If, before or during the performance of the Work, Contractor discovers any conflict, error, ambiguity, or discrepancy within the Contract Documents, or between the Contract Documents and (a) any applicable Law or Regulation, (b) actual field conditions, (c) any standard specification, manual, reference standard, or code, or (d) any instruction of any Supplier, then Contractor shall promptly report it to Engineer in writing. Contractor shall not proceed with the Work affected thereby (except in an emergency as required by Paragraph 7.15) until the conflict, error, ambiguity, or discrepancy is resolved, by a clarification or interpretation by Engineer, or by an amendment or supplement to the Contract Documents issued pursuant to Paragraph 11.01.

3. Contractor shall not be liable to Owner or Engineer for failure to report any conflict, error, ambiguity, or discrepancy in the Contract Documents unless Contractor had actual knowledge thereof.

B. *Resolving Discrepancies*:

1. Except as may be otherwise specifically stated in the Contract Documents, the provisions of the part of the Contract Documents prepared by or for Engineer shall take precedence in resolving any conflict, error, ambiguity, or discrepancy between such provisions of the Contract Documents and:

   a. the provisions of any standard specification, manual, reference standard, or code, or the instruction of any Supplier (whether or not specifically incorporated by reference as a Contract Document); or

   b. the provisions of any Laws or Regulations applicable to the performance of the Work (unless such an interpretation of the provisions of the Contract Documents would result in violation of such Law or Regulation).

3.4 *Requirements of the Contract Documents*

A. During the performance of the Work and until final payment, Contractor and Owner shall submit to the Engineer all matters in question concerning the requirements of the Contract Documents (sometimes referred to as requests for information or interpretation—RFIs), or relating to the acceptability of the Work under the Contract Documents, as soon as possible after such matters arise. Engineer will be the initial interpreter of the requirements of the Contract Documents, and judge of the acceptability of the Work thereunder.

B. Engineer will, with reasonable promptness, render a written clarification, interpretation, or decision on the issue submitted, or initiate an amendment or supplement to the Contract Documents. Engineer's written clarification, interpretation, or decision will be final and

Copyright © 2013 National Society of Professional Engineers, American Council of Engineering Companies, and American Society of Civil Engineers. All rights reserved.

binding on Contractor, unless it appeals by submitting a Change Proposal, and on Owner, unless it appeals by filing a Claim.

C. If a submitted matter in question concerns terms and conditions of the Contract Documents that do not involve (1) the performance or acceptability of the Work under the Contract Documents, (2) the design (as set forth in the Drawings, Specifications, or otherwise), or (3) other engineering or technical matters, then Engineer will promptly give written notice to Owner and Contractor that Engineer is unable to provide a decision or interpretation. If Owner and Contractor are unable to agree on resolution of such a matter in question, either party may pursue resolution as provided in Article 12.

3.5 *Reuse of Documents*

A. Contractor and its Subcontractors and Suppliers shall not:

1. have or acquire any title to or ownership rights in any of the Drawings, Specifications, or other documents (or copies of any thereof) prepared by or bearing the seal of Engineer or its consultants, including electronic media editions, or reuse any such Drawings, Specifications, other documents, or copies thereof on extensions of the Project or any other project without written consent of Owner and Engineer and specific written verification or adaptation by Engineer; or

2. have or acquire any title or ownership rights in any other Contract Documents, reuse any such Contract Documents for any purpose without Owner's express written consent, or violate any copyrights pertaining to such Contract Documents.

B. The prohibitions of this Paragraph 3.05 will survive final payment, or termination of the Contract. Nothing herein shall preclude Contractor from retaining copies of the Contract Documents for record purposes.

ARTICLE 4 – COMMENCEMENT AND PROGRESS OF THE WORK

4.1 *Commencement of Contract Times; Notice to Proceed*

A. The Contract Times will commence to run on the thirtieth day after the Effective Date of the Contract or, if a Notice to Proceed is given, on the day indicated in the Notice to Proceed. A Notice to Proceed may be given at any time within 30 days after the Effective Date of the Contract. In no event will the Contract Times commence to run later than the sixtieth day after the day of Bid opening or the thirtieth day after the Effective Date of the Contract, whichever date is earlier.

4.2 *Starting the Work*

A. Contractor shall start to perform the Work on the date when the Contract Times commence to run. No Work shall be done at the Site prior to such date.

4.3 *Reference Points*

A. Owner shall provide engineering surveys to establish reference points for construction which in Engineer's judgment are necessary to enable Contractor to proceed with the Work. Contractor shall be responsible for laying out the Work, shall protect and preserve

Copyright © 2013 National Society of Professional Engineers, American Council of Engineering Companies, and American Society of Civil Engineers. All rights reserved.

the established reference points and property monuments, and shall make no changes or relocations without the prior written approval of Owner. Contractor shall report to Engineer whenever any reference point or property monument is lost or destroyed or requires relocation because of necessary changes in grades or locations, and shall be responsible for the accurate replacement or relocation of such reference points or property monuments by professionally qualified personnel.

4.4 *Progress Schedule*

A. Contractor shall adhere to the Progress Schedule established in accordance with Paragraph 2.05 as it may be adjusted from time to time as provided below.

1. Contractor shall submit to Engineer for acceptance (to the extent indicated in Paragraph 2.05) proposed adjustments in the Progress Schedule that will not result in changing the Contract Times.

2. Proposed adjustments in the Progress Schedule that will change the Contract Times shall be submitted in accordance with the requirements of Article 11.

B. Contractor shall carry on the Work and adhere to the Progress Schedule during all disputes or disagreements with Owner. No Work shall be delayed or postponed pending resolution of any disputes or disagreements, or during any appeal process, except as permitted by Paragraph 16.04, or as Owner and Contractor may otherwise agree in writing.

4.5 *Delays in Contractor's Progress*

A. If Owner, Engineer, or anyone for whom Owner is responsible, delays, disrupts, or interferes with the performance or progress of the Work, then Contractor shall be entitled to an equitable adjustment in the Contract Times and Contract Price. Contractor's entitlement to an adjustment of the Contract Times is conditioned on such adjustment being essential to Contractor's ability to complete the Work within the Contract Times.

B. Contractor shall not be entitled to an adjustment in Contract Price or Contract Times for delay, disruption, or interference caused by or within the control of Contractor. Delay, disruption, and interference attributable to and within the control of a Subcontractor or Supplier shall be deemed to be within the control of Contractor.

C. If Contractor's performance or progress is delayed, disrupted, or interfered with by unanticipated causes not the fault of and beyond the control of Owner, Contractor, and those for which they are responsible, then Contractor shall be entitled to an equitable adjustment in Contract Times. Contractor's entitlement to an adjustment of the Contract Times is conditioned on such adjustment being essential to Contractor's ability to complete the Work within the Contract Times. Such an adjustment shall be Contractor's sole and exclusive remedy for the delays, disruption, and interference described in this paragraph. Causes of delay, disruption, or interference that may give rise to an adjustment in Contract Times under this paragraph include but are not limited to the following:

1. severe and unavoidable natural catastrophes such as fires, floods, epidemics, and earthquakes;

Copyright © 2013 National Society of Professional Engineers, American Council of Engineering Companies, and American Society of Civil Engineers. All rights reserved.

2. abnormal weather conditions;

3. acts or failures to act of utility owners (other than those performing other work at or adjacent to the Site by arrangement with the Owner, as contemplated in Article 8); and

4. acts of war or terrorism.

D. Delays, disruption, and interference to the performance or progress of the Work resulting from the existence of a differing subsurface or physical condition, an Underground Facility that was not shown or indicated by the Contract Documents, or not shown or indicated with reasonable accuracy, and those resulting from Hazardous Environmental Conditions, are governed by Article 5.

E. Paragraph 8.03 governs delays, disruption, and interference to the performance or progress of the Work resulting from the performance of certain other work at or adjacent to the Site.

F. Contractor shall not be entitled to an adjustment in Contract Price or Contract Times for any delay, disruption, or interference if such delay is concurrent with a delay, disruption, or interference caused by or within the control of Contractor.

G. Contractor must submit any Change Proposal seeking an adjustment in Contract Price or Contract Times under this paragraph within 30 days of the commencement of the delaying, disrupting, or interfering event.

ARTICLE 5 – AVAILABILITY OF LANDS; SUBSURFACE AND PHYSICAL CONDITIONS; HAZARDOUS ENVIRONMENTAL CONDITIONS

5.1 *Availability of Lands*

A. Owner shall furnish the Site. Owner shall notify Contractor of any encumbrances or restrictions not of general application but specifically related to use of the Site with which Contractor must comply in performing the Work.

B. Upon reasonable written request, Owner shall furnish Contractor with a current statement of record legal title and legal description of the lands upon which permanent improvements are to be made and Owner's interest therein as necessary for giving notice of or filing a mechanic's or construction lien against such lands in accordance with applicable Laws and Regulations.

C. Contractor shall provide for all additional lands and access thereto that may be required for temporary construction facilities or storage of materials and equipment.

5.2 *Use of Site and Other Areas*

A. *Limitation on Use of Site and Other Areas*:

1. Contractor shall confine construction equipment, temporary construction facilities, the storage of materials and equipment, and the operations of workers to the Site, adjacent areas that Contractor has arranged to use through construction easements or otherwise, and other adjacent areas permitted by Laws and Regulations, and shall not

Copyright © 2013 National Society of Professional Engineers, American Council of Engineering Companies, and American Society of Civil Engineers. All rights reserved.

unreasonably encumber the Site and such other adjacent areas with construction equipment or other materials or equipment. Contractor shall assume full responsibility for (a) damage to the Site; (b) damage to any such other adjacent areas used for Contractor's operations; (c) damage to any other adjacent land or areas; and (d) for injuries and losses sustained by the owners or occupants of any such land or areas; provided that such damage or injuries result from the performance of the Work or from other actions or conduct of the Contractor or those for which Contractor is responsible.

2. If a damage or injury claim is made by the owner or occupant of any such land or area because of the performance of the Work, or because of other actions or conduct of the Contractor or those for which Contractor is responsible, Contractor shall (a) take immediate corrective or remedial action as required by Paragraph 7.12, or otherwise; (b) promptly attempt to settle the claim as to all parties through negotiations with such owner or occupant, or otherwise resolve the claim by arbitration or other dispute resolution proceeding, or at law; and (c) to the fullest extent permitted by Laws and Regulations, indemnify and hold harmless Owner and Engineer, and the officers, directors, members, partners, employees, agents, consultants and subcontractors of each and any of them from and against any such claim, and against all costs, losses, and damages (including but not limited to all fees and charges of engineers, architects, attorneys, and other professionals and all court or arbitration or other dispute resolution costs) arising out of or relating to any claim or action, legal or equitable, brought by any such owner or occupant against Owner, Engineer, or any other party indemnified hereunder to the extent caused directly or indirectly, in whole or in part by, or based upon, Contractor's performance of the Work, or because of other actions or conduct of the Contractor or those for which Contractor is responsible.

B. *Removal of Debris During Performance of the Work*: During the progress of the Work the Contractor shall keep the Site and other adjacent areas free from accumulations of waste materials, rubbish, and other debris. Removal and disposal of such waste materials, rubbish, and other debris shall conform to applicable Laws and Regulations.

C. *Cleaning*: Prior to Substantial Completion of the Work Contractor shall clean the Site and the Work and make it ready for utilization by Owner. At the completion of the Work Contractor shall remove from the Site and adjacent areas all tools, appliances, construction equipment and machinery, and surplus materials and shall restore to original condition all property not designated for alteration by the Contract Documents.

D. *Loading of Structures*: Contractor shall not load nor permit any part of any structure to be loaded in any manner that will endanger the structure, nor shall Contractor subject any part of the Work or adjacent structures or land to stresses or pressures that will endanger them.

Copyright © 2013 National Society of Professional Engineers, American Council of Engineering Companies, and American Society of Civil Engineers. All rights reserved.

5.3 *Subsurface and Physical Conditions*

A. *Reports and Drawings*: The Supplementary Conditions identify:

1. those reports known to Owner of explorations and tests of subsurface conditions at or adjacent to the Site;

2. those drawings known to Owner of physical conditions relating to existing surface or subsurface structures at the Site (except Underground Facilities); and

3. Technical Data contained in such reports and drawings.

B. *Reliance by Contractor on Technical Data Authorized*: Contractor may rely upon the accuracy of the Technical Data expressly identified in the Supplementary Conditions with respect to such reports and drawings, but such reports and drawings are not Contract Documents. If no such express identification has been made, then Contractor may rely upon the accuracy of the Technical Data (as defined in Article 1) contained in any geotechnical or environmental report prepared for the Project and made available to Contractor. Except for such reliance on Technical Data, Contractor may not rely upon or make any claim against Owner or Engineer, or any of their officers, directors, members, partners, employees, agents, consultants, or subcontractors, with respect to:

1. the completeness of such reports and drawings for Contractor's purposes, including, but not limited to, any aspects of the means, methods, techniques, sequences, and procedures of construction to be employed by Contractor, and safety precautions and programs incident thereto; or

2. other data, interpretations, opinions, and information contained in such reports or shown or indicated in such drawings; or

3. any Contractor interpretation of or conclusion drawn from any Technical Data or any such other data, interpretations, opinions, or information.

5.4 *Differing Subsurface or Physical Conditions*

A. *Notice by Contractor*: If Contractor believes that any subsurface or physical condition that is uncovered or revealed at the Site either:

1. is of such a nature as to establish that any Technical Data on which Contractor is entitled to rely as provided in Paragraph 5.03 is materially inaccurate; or

2. is of such a nature as to require a change in the Drawings or Specifications; or

3. differs materially from that shown or indicated in the Contract Documents; or

4. is of an unusual nature, and differs materially from conditions ordinarily encountered and generally recognized as inherent in work of the character provided for in the Contract Documents;

then Contractor shall, promptly after becoming aware thereof and before further disturbing the subsurface or physical conditions or performing any Work in connection therewith (except in an emergency as required by Paragraph 7.15), notify Owner and Engineer in writing about such condition. Contractor shall not further disturb such

Copyright © 2013 National Society of Professional Engineers, American Council of Engineering Companies, and American Society of Civil Engineers. All rights reserved.

condition or perform any Work in connection therewith (except with respect to an emergency) until receipt of a written statement permitting Contractor to do so.

B. *Engineer's Review*: After receipt of written notice as required by the preceding paragraph, Engineer will promptly review the subsurface or physical condition in question; determine the necessity of Owner's obtaining additional exploration or tests with respect to the condition; conclude whether the condition falls within any one or more of the differing site condition categories in Paragraph 5.04.A above; obtain any pertinent cost or schedule information from Contractor; prepare recommendations to Owner regarding the Contractor's resumption of Work in connection with the subsurface or physical condition in question and the need for any change in the Drawings or Specifications; and advise Owner in writing of Engineer's findings, conclusions, and recommendations.

C. *Owner's Statement to Contractor Regarding Site Condition*: After receipt of Engineer's written findings, conclusions, and recommendations, Owner shall issue a written statement to Contractor (with a copy to Engineer) regarding the subsurface or physical condition in question, addressing the resumption of Work in connection with such condition, indicating whether any change in the Drawings or Specifications will be made, and adopting or rejecting Engineer's written findings, conclusions, and recommendations, in whole or in part.

D. *Possible Price and Times Adjustments*:

1. Contractor shall be entitled to an equitable adjustment in Contract Price or Contract Times, or both, to the extent that the existence of a differing subsurface or physical condition, or any related delay, disruption, or interference, causes an increase or decrease in Contractor's cost of, or time required for, performance of the Work; subject, however, to the following:

   a. such condition must fall within any one or more of the categories described in Paragraph 5.04.A;

   b. with respect to Work that is paid for on a unit price basis, any adjustment in Contract Price will be subject to the provisions of Paragraph 13.03; and,

   c. Contractor's entitlement to an adjustment of the Contract Times is conditioned on such adjustment being essential to Contractor's ability to complete the Work within the Contract Times.

2. Contractor shall not be entitled to any adjustment in the Contract Price or Contract Times with respect to a subsurface or physical condition if:

   a. Contractor knew of the existence of such condition at the time Contractor made a commitment to Owner with respect to Contract Price and Contract Times by the submission of a Bid or becoming bound under a negotiated contract, or otherwise; or

   b. the existence of such condition reasonably could have been discovered or revealed as a result of any examination, investigation, exploration, test, or study of the Site and contiguous areas expressly required by the Bidding Requirements

Copyright © 2013 National Society of Professional Engineers, American Council of Engineering Companies, and American Society of Civil Engineers. All rights reserved.

or Contract Documents to be conducted by or for Contractor prior to Contractor's making such commitment; or

c. Contractor failed to give the written notice as required by Paragraph 5.04.A.

3. If Owner and Contractor agree regarding Contractor's entitlement to and the amount or extent of any adjustment in the Contract Price or Contract Times, or both, then any such adjustment shall be set forth in a Change Order.

4. Contractor may submit a Change Proposal regarding its entitlement to or the amount or extent of any adjustment in the Contract Price or Contract Times, or both, no later than 30 days after Owner's issuance of the Owner's written statement to Contractor regarding the subsurface or physical condition in question.

5.5 *Underground Facilities*

A. *Contractor's Responsibilities*: The information and data shown or indicated in the Contract Documents with respect to existing Underground Facilities at or adjacent to the Site is based on information and data furnished to Owner or Engineer by the owners of such Underground Facilities, including Owner, or by others. Unless it is otherwise expressly provided in the Supplementary Conditions:

1. Owner and Engineer do not warrant or guarantee the accuracy or completeness of any such information or data provided by others; and

2. the cost of all of the following will be included in the Contract Price, and Contractor shall have full responsibility for:

a. reviewing and checking all information and data regarding existing Underground Facilities at the Site;

b. locating all Underground Facilities shown or indicated in the Contract Documents as being at the Site;

c. coordination of the Work with the owners (including Owner) of such Underground Facilities, during construction; and

d. the safety and protection of all existing Underground Facilities at the Site, and repairing any damage thereto resulting from the Work.

B. *Notice by Contractor*: If Contractor believes that an Underground Facility that is uncovered or revealed at the Site was not shown or indicated in the Contract Documents, or was not shown or indicated with reasonable accuracy, then Contractor shall, promptly after becoming aware thereof and before further disturbing conditions affected thereby or performing any Work in connection therewith (except in an emergency as required by Paragraph 7.15), identify the owner of such Underground Facility and give written notice to that owner and to Owner and Engineer.

C. *Engineer's Review*: Engineer will promptly review the Underground Facility and conclude whether such Underground Facility was not shown or indicated in the Contract Documents, or was not shown or indicated with reasonable accuracy; obtain any pertinent cost or

Copyright © 2013 National Society of Professional Engineers, American Council of Engineering Companies, and American Society of Civil Engineers. All rights reserved.

schedule information from Contractor; prepare recommendations to Owner regarding the Contractor's resumption of Work in connection with the Underground Facility in question; determine the extent, if any, to which a change is required in the Drawings or Specifications to reflect and document the consequences of the existence or location of the Underground Facility; and advise Owner in writing of Engineer's findings, conclusions, and recommendations. During such time, Contractor shall be responsible for the safety and protection of such Underground Facility.

D. *Owner's Statement to Contractor Regarding Underground Facility*: After receipt of Engineer's written findings, conclusions, and recommendations, Owner shall issue a written statement to Contractor (with a copy to Engineer) regarding the Underground Facility in question, addressing the resumption of Work in connection with such Underground Facility, indicating whether any change in the Drawings or Specifications will be made, and adopting or rejecting Engineer's written findings, conclusions, and recommendations in whole or in part.

E. *Possible Price and Times Adjustments*:

1. Contractor shall be entitled to an equitable adjustment in the Contract Price or Contract Times, or both, to the extent that any existing Underground Facility at the Site that was not shown or indicated in the Contract Documents, or was not shown or indicated with reasonable accuracy, or any related delay, disruption, or interference, causes an increase or decrease in Contractor's cost of, or time required for, performance of the Work; subject, however, to the following:

   a. Contractor did not know of and could not reasonably have been expected to be aware of or to have anticipated the existence or actual location of the Underground Facility in question;

   b. With respect to Work that is paid for on a unit price basis, any adjustment in Contract Price will be subject to the provisions of Paragraph 13.03;

   c. Contractor's entitlement to an adjustment of the Contract Times is conditioned on such adjustment being essential to Contractor's ability to complete the Work within the Contract Times; and

   d. Contractor gave the notice required in Paragraph 5.05.B.

2. If Owner and Contractor agree regarding Contractor's entitlement to and the amount or extent of any adjustment in the Contract Price or Contract Times, or both, then any such adjustment shall be set forth in a Change Order.

3. Contractor may submit a Change Proposal regarding its entitlement to or the amount or extent of any adjustment in the Contract Price or Contract Times, or both, no later than 30 days after Owner's issuance of the Owner's written statement to Contractor regarding the Underground Facility in question.

Copyright © 2013 National Society of Professional Engineers, American Council of Engineering Companies, and American Society of Civil Engineers. All rights reserved.

5.6 *Hazardous Environmental Conditions at Site*

A. *Reports and Drawings*: The Supplementary Conditions identify:

1. those reports and drawings known to Owner relating to Hazardous Environmental Conditions that have been identified at or adjacent to the Site; and

2. Technical Data contained in such reports and drawings.

B. *Reliance by Contractor on Technical Data Authorized*: Contractor may rely upon the accuracy of the Technical Data expressly identified in the Supplementary Conditions with respect to such reports and drawings, but such reports and drawings are not Contract Documents. If no such express identification has been made, then Contractor may rely on the accuracy of the Technical Data (as defined in Article 1) contained in any geotechnical or environmental report prepared for the Project and made available to Contractor. Except for such reliance on Technical Data, Contractor may not rely upon or make any claim against Owner or Engineer, or any of their officers, directors, members, partners, employees, agents, consultants, or subcontractors with respect to:

1. the completeness of such reports and drawings for Contractor's purposes, including, but not limited to, any aspects of the means, methods, techniques, sequences and procedures of construction to be employed by Contractor and safety precautions and programs incident thereto; or

2. other data, interpretations, opinions and information contained in such reports or shown or indicated in such drawings; or

3. any Contractor interpretation of or conclusion drawn from any Technical Data or any such other data, interpretations, opinions or information.

C. Contractor shall not be responsible for removing or remediating any Hazardous Environmental Condition encountered, uncovered, or revealed at the Site unless such removal or remediation is expressly identified in the Contract Documents to be within the scope of the Work.

D. Contractor shall be responsible for controlling, containing, and duly removing all Constituents of Concern brought to the Site by Contractor, Subcontractors, Suppliers, or anyone else for whom Contractor is responsible, and for any associated costs; and for the costs of removing and remediating any Hazardous Environmental Condition created by the presence of any such Constituents of Concern.

E. If Contractor encounters, uncovers, or reveals a Hazardous Environmental Condition whose removal or remediation is not expressly identified in the Contract Documents as being within the scope of the Work, or if Contractor or anyone for whom Contractor is responsible creates a Hazardous Environmental Condition, then Contractor shall immediately: (1) secure or otherwise isolate such condition; (2) stop all Work in connection with such condition and in any area affected thereby (except in an emergency as required by Paragraph 7.15); and (3) notify Owner and Engineer (and promptly thereafter confirm such notice in writing). Owner shall promptly consult with Engineer concerning the necessity for Owner to retain a qualified expert to evaluate such condition or take

Copyright © 2013 National Society of Professional Engineers, American Council of Engineering Companies, and American Society of Civil Engineers. All rights reserved.

corrective action, if any. Promptly after consulting with Engineer, Owner shall take such actions as are necessary to permit Owner to timely obtain required permits and provide Contractor the written notice required by Paragraph 5.06.F. If Contractor or anyone for whom Contractor is responsible created the Hazardous Environmental Condition in question, then Owner may remove and remediate the Hazardous Environmental Condition, and impose a set-off against payments to account for the associated costs.

F. Contractor shall not resume Work in connection with such Hazardous Environmental Condition or in any affected area until after Owner has obtained any required permits related thereto, and delivered written notice to Contractor either (1) specifying that such condition and any affected area is or has been rendered safe for the resumption of Work, or (2) specifying any special conditions under which such Work may be resumed safely.

G. If Owner and Contractor cannot agree as to entitlement to or on the amount or extent, if any, of any adjustment in Contract Price or Contract Times, or both, as a result of such Work stoppage or such special conditions under which Work is agreed to be resumed by Contractor, then within 30 days of Owner's written notice regarding the resumption of Work, Contractor may submit a Change Proposal, or Owner may impose a set-off.

H. If after receipt of such written notice Contractor does not agree to resume such Work based on a reasonable belief it is unsafe, or does not agree to resume such Work under such special conditions, then Owner may order the portion of the Work that is in the area affected by such condition to be deleted from the Work, following the contractual change procedures in Article 11. Owner may have such deleted portion of the Work performed by Owner's own forces or others in accordance with Article 8.

I. To the fullest extent permitted by Laws and Regulations, Owner shall indemnify and hold harmless Contractor, Subcontractors, and Engineer, and the officers, directors, members, partners, employees, agents, consultants, and subcontractors of each and any of them from and against all claims, costs, losses, and damages (including but not limited to all fees and charges of engineers, architects, attorneys, and other professionals and all court or arbitration or other dispute resolution costs) arising out of or relating to a Hazardous Environmental Condition, provided that such Hazardous Environmental Condition (1) was not shown or indicated in the Drawings, Specifications, or other Contract Documents, identified as Technical Data entitled to limited reliance pursuant to Paragraph 5.06.B, or identified in the Contract Documents to be included within the scope of the Work, and (2) was not created by Contractor or by anyone for whom Contractor is responsible. Nothing in this Paragraph 5.06.I shall obligate Owner to indemnify any individual or entity from and against the consequences of that individual's or entity's own negligence.

J. To the fullest extent permitted by Laws and Regulations, Contractor shall indemnify and hold harmless Owner and Engineer, and the officers, directors, members, partners, employees, agents, consultants, and subcontractors of each and any of them from and against all claims, costs, losses, and damages (including but not limited to all fees and charges of engineers, architects, attorneys, and other professionals and all court or arbitration or other dispute resolution costs) arising out of or relating to the failure to control, contain, or remove a Constituent of Concern brought to the Site by Contractor or

Copyright © 2013 National Society of Professional Engineers, American Council of Engineering Companies, and American Society of Civil Engineers. All rights reserved.

by anyone for whom Contractor is responsible, or to a Hazardous Environmental Condition created by Contractor or by anyone for whom Contractor is responsible. Nothing in this Paragraph 5.06.J shall obligate Contractor to indemnify any individual or entity from and against the consequences of that individual's or entity's own negligence.

K. The provisions of Paragraphs 5.03, 5.04, and 5.05 do not apply to the presence of Constituents of Concern or to a Hazardous Environmental Condition uncovered or revealed at the Site.

ARTICLE 6 – BONDS AND INSURANCE

6.1 *Performance, Payment, and Other Bonds*

A. Contractor shall furnish a performance bond and a payment bond, each in an amount at least equal to the Contract Price, as security for the faithful performance and payment of all of Contractor's obligations under the Contract. These bonds shall remain in effect until one year after the date when final payment becomes due or until completion of the correction period specified in Paragraph 15.08, whichever is later, except as provided otherwise by Laws or Regulations, the Supplementary Conditions, or other specific provisions of the Contract. Contractor shall also furnish such other bonds as are required by the Supplementary Conditions or other specific provisions of the Contract.

B. All bonds shall be in the form prescribed by the Contract except as provided otherwise by Laws or Regulations, and shall be executed by such sureties as are named in "Companies Holding Certificates of Authority as Acceptable Sureties on Federal Bonds and as Acceptable Reinsuring Companies" as published in Circular 570 (as amended and supplemented) by the Financial Management Service, Surety Bond Branch, U.S. Department of the Treasury. A bond signed by an agent or attorney-in-fact must be accompanied by a certified copy of that individual's authority to bind the surety. The evidence of authority shall show that it is effective on the date the agent or attorney-in-fact signed the accompanying bond.

C. Contractor shall obtain the required bonds from surety companies that are duly licensed or authorized in the jurisdiction in which the Project is located to issue bonds in the required amounts.

D. If the surety on a bond furnished by Contractor is declared bankrupt or becomes insolvent, or its right to do business is terminated in any state or jurisdiction where any part of the Project is located, or the surety ceases to meet the requirements above, then Contractor shall promptly notify Owner and Engineer and shall, within 20 days after the event giving rise to such notification, provide another bond and surety, both of which shall comply with the bond and surety requirements above.

E. If Contractor has failed to obtain a required bond, Owner may exclude the Contractor from the Site and exercise Owner's termination rights under Article 16.

F. Upon request, Owner shall provide a copy of the payment bond to any Subcontractor, Supplier, or other person or entity claiming to have furnished labor or materials used in the performance of the Work.

Copyright © 2013 National Society of Professional Engineers, American Council of Engineering Companies, and American Society of Civil Engineers. All rights reserved.

6.2 *Insurance—General Provisions*

A. Owner and Contractor shall obtain and maintain insurance as required in this Article and in the Supplementary Conditions.

B. All insurance required by the Contract to be purchased and maintained by Owner or Contractor shall be obtained from insurance companies that are duly licensed or authorized, in the state or jurisdiction in which the Project is located, to issue insurance policies for the required limits and coverages. Unless a different standard is indicated in the Supplementary Conditions, all companies that provide insurance policies required under this Contract shall have an A.M. Best rating of A-VII or better.

C. Contractor shall deliver to Owner, with copies to each named insured and additional insured (as identified in this Article, in the Supplementary Conditions, or elsewhere in the Contract), certificates of insurance establishing that Contractor has obtained and is maintaining the policies, coverages, and endorsements required by the Contract. Upon request by Owner or any other insured, Contractor shall also furnish other evidence of such required insurance, including but not limited to copies of policies and endorsements, and documentation of applicable self-insured retentions and deductibles. Contractor may block out (redact) any confidential premium or pricing information contained in any policy or endorsement furnished under this provision.

D. Owner shall deliver to Contractor, with copies to each named insured and additional insured (as identified in this Article, the Supplementary Conditions, or elsewhere in the Contract), certificates of insurance establishing that Owner has obtained and is maintaining the policies, coverages, and endorsements required of Owner by the Contract (if any). Upon request by Contractor or any other insured, Owner shall also provide other evidence of such required insurance (if any), including but not limited to copies of policies and endorsements, and documentation of applicable self-insured retentions and deductibles. Owner may block out (redact) any confidential premium or pricing information contained in any policy or endorsement furnished under this provision.

E. Failure of Owner or Contractor to demand such certificates or other evidence of the other party's full compliance with these insurance requirements, or failure of Owner or Contractor to identify a deficiency in compliance from the evidence provided, shall not be construed as a waiver of the other party's obligation to obtain and maintain such insurance.

F. If either party does not purchase or maintain all of the insurance required of such party by the Contract, such party shall notify the other party in writing of such failure to purchase prior to the start of the Work, or of such failure to maintain prior to any change in the required coverage.

G. If Contractor has failed to obtain and maintain required insurance, Owner may exclude the Contractor from the Site, impose an appropriate set-off against payment, and exercise Owner's termination rights under Article 16.

H. Without prejudice to any other right or remedy, if a party has failed to obtain required insurance, the other party may elect to obtain equivalent insurance to protect such other

Copyright © 2013 National Society of Professional Engineers, American Council of Engineering Companies, and American Society of Civil Engineers. All rights reserved.

party's interests at the expense of the party who was required to provide such coverage, and the Contract Price shall be adjusted accordingly.

I. Owner does not represent that insurance coverage and limits established in this Contract necessarily will be adequate to protect Contractor or Contractor's interests.

J. The insurance and insurance limits required herein shall not be deemed as a limitation on Contractor's liability under the indemnities granted to Owner and other individuals and entities in the Contract.

6.3 *Contractor's Insurance*

A. *Workers' Compensation*: Contractor shall purchase and maintain workers' compensation and employer's liability insurance for:

1. claims under workers' compensation, disability benefits, and other similar employee benefit acts.

2. United States Longshoreman and Harbor Workers' Compensation Act and Jones Act coverage (if applicable).

3. claims for damages because of bodily injury, occupational sickness or disease, or death of Contractor's employees (by stop-gap endorsement in monopolist worker's compensation states).

4. Foreign voluntary worker compensation (if applicable).

B. *Commercial General Liability—Claims Covered*: Contractor shall purchase and maintain commercial general liability insurance, covering all operations by or on behalf of Contractor, on an occurrence basis, against:

1. claims for damages because of bodily injury, sickness or disease, or death of any person other than Contractor's employees.

2. claims for damages insured by reasonably available personal injury liability coverage.

3. claims for damages, other than to the Work itself, because of injury to or destruction of tangible property wherever located, including loss of use resulting therefrom.

C. *Commercial General Liability—Form and Content*: Contractor's commercial liability policy shall be written on a 1996 (or later) ISO commercial general liability form (occurrence form) and include the following coverages and endorsements:

1. Products and completed operations coverage:

a. Such insurance shall be maintained for three years after final payment.

b. Contractor shall furnish Owner and each other additional insured (as identified in the Supplementary Conditions or elsewhere in the Contract) evidence of continuation of such insurance at final payment and three years thereafter.

2. Blanket contractual liability coverage, to the extent permitted by law, including but not limited to coverage of Contractor's contractual indemnity obligations in Paragraph 7.18.

Copyright © 2013 National Society of Professional Engineers, American Council of Engineering Companies, and American Society of Civil Engineers. All rights reserved.

3. Broad form property damage coverage.

4. Severability of interest.

5. Underground, explosion, and collapse coverage.

6. Personal injury coverage.

7. Additional insured endorsements that include both ongoing operations and products and completed operations coverage through ISO Endorsements CG 20 10 10 01 and CG 20 37 10 01 (together); or CG 20 10 07 04 and CG 20 37 07 04 (together); or their equivalent.

8. For design professional additional insureds, ISO Endorsement CG 20 32 07 04, "Additional Insured—Engineers, Architects or Surveyors Not Engaged by the Named Insured" or its equivalent.

D. *Automobile liability*: Contractor shall purchase and maintain automobile liability insurance against claims for damages because of bodily injury or death of any person or property damage arising out of the ownership, maintenance, or use of any motor vehicle. The automobile liability policy shall be written on an occurrence basis.

E. *Umbrella or excess liability*: Contractor shall purchase and maintain umbrella or excess liability insurance written over the underlying employer's liability, commercial general liability, and automobile liability insurance described in the paragraphs above. Subject to industry-standard exclusions, the coverage afforded shall follow form as to each and every one of the underlying policies.

F. *Contractor's pollution liability insurance*: Contractor shall purchase and maintain a policy covering third-party injury and property damage claims, including clean-up costs, as a result of pollution conditions arising from Contractor's operations and completed operations. This insurance shall be maintained for no less than three years after final completion.

G. *Additional insureds*: The Contractor's commercial general liability, automobile liability, umbrella or excess, and pollution liability policies shall include and list as additional insureds Owner and Engineer, and any individuals or entities identified in the Supplementary Conditions; include coverage for the respective officers, directors, members, partners, employees, agents, consultants, and subcontractors of each and any of all such additional insureds; and the insurance afforded to these additional insureds shall provide primary coverage for all claims covered thereby (including as applicable those arising from both ongoing and completed operations) on a non-contributory basis. Contractor shall obtain all necessary endorsements to support these requirements.

H. *Contractor's professional liability insurance*: If Contractor will provide or furnish professional services under this Contract, through a delegation of professional design services or otherwise, then Contractor shall be responsible for purchasing and maintaining applicable professional liability insurance. This insurance shall provide protection against claims arising out of performance of professional design or related services, and caused by a negligent error, omission, or act for which the insured party is legally liable. It shall be maintained throughout the duration of the Contract and for a minimum of two years after

Copyright © 2013 National Society of Professional Engineers, American Council of Engineering Companies, and American Society of Civil Engineers. All rights reserved.

Substantial Completion. If such professional design services are performed by a Subcontractor, and not by Contractor itself, then the requirements of this paragraph may be satisfied through the purchasing and maintenance of such insurance by such Subcontractor.

I. *General provisions*: The policies of insurance required by this Paragraph 6.03 shall:

1. include at least the specific coverages provided in this Article.
2. be written for not less than the limits of liability provided in this Article and in the Supplementary Conditions, or required by Laws or Regulations, whichever is greater.
3. contain a provision or endorsement that the coverage afforded will not be canceled, materially changed, or renewal refused until at least 10 days prior written notice has been given to Contractor. Within three days of receipt of any such written notice, Contractor shall provide a copy of the notice to Owner, Engineer, and each other insured under the policy.
4. remain in effect at least until final payment (and longer if expressly required in this Article) and at all times thereafter when Contractor may be correcting, removing, or replacing defective Work as a warranty or correction obligation, or otherwise, or returning to the Site to conduct other tasks arising from the Contract Documents.
5. be appropriate for the Work being performed and provide protection from claims that may arise out of or result from Contractor's performance of the Work and Contractor's other obligations under the Contract Documents, whether it is to be performed by Contractor, any Subcontractor or Supplier, or by anyone directly or indirectly employed by any of them to perform any of the Work, or by anyone for whose acts any of them may be liable.

J. The coverage requirements for specific policies of insurance must be met by such policies, and not by reference to excess or umbrella insurance provided in other policies.

6.4 *Owner's Liability Insurance*

A. In addition to the insurance required to be provided by Contractor under Paragraph 6.03, Owner, at Owner's option, may purchase and maintain at Owner's expense Owner's own liability insurance as will protect Owner against claims which may arise from operations under the Contract Documents.

B. Owner's liability policies, if any, operate separately and independently from policies required to be provided by Contractor, and Contractor cannot rely upon Owner's liability policies for any of Contractor's obligations to the Owner, Engineer, or third parties.

6.5 *Property Insurance*

A. *Builder's Risk*: Unless otherwise provided in the Supplementary Conditions, Contractor shall purchase and maintain builder's risk insurance upon the Work on a completed value basis, in the amount of the full insurable replacement cost thereof (subject to such deductible amounts as may be provided in the Supplementary Conditions or required by Laws and Regulations). This insurance shall:

Copyright © 2013 National Society of Professional Engineers, American Council of Engineering Companies, and American Society of Civil Engineers. All rights reserved.

1. include the Owner and Contractor as named insureds, and all Subcontractors, and any individuals or entities required by the Supplementary Conditions to be insured under such builder's risk policy, as insureds or named insureds. For purposes of the remainder of this Paragraph 6.05, Paragraphs 6.06 and 6.07, and any corresponding Supplementary Conditions, the parties required to be insured shall collectively be referred to as "insureds."

2. be written on a builder's risk "all risk" policy form that shall at least include insurance for physical loss or damage to the Work, temporary buildings, falsework, and materials and equipment in transit, and shall insure against at least the following perils or causes of loss: fire; lightning; windstorm; riot; civil commotion; terrorism; vehicle impact; aircraft; smoke; theft; vandalism and malicious mischief; mechanical breakdown, boiler explosion, and artificially generated electric current; earthquake; volcanic activity, and other earth movement; flood; collapse; explosion; debris removal; demolition occasioned by enforcement of Laws and Regulations; water damage (other than that caused by flood); and such other perils or causes of loss as may be specifically required by the Supplementary Conditions. If insurance against mechanical breakdown, boiler explosion, and artificially generated electric current; earthquake; volcanic activity, and other earth movement; or flood, are not commercially available under builder's risk policies, by endorsement or otherwise, such insurance may be provided through other insurance policies acceptable to Owner and Contractor.

3. cover, as insured property, at least the following: (a) the Work and all materials, supplies, machinery, apparatus, equipment, fixtures, and other property of a similar nature that are to be incorporated into or used in the preparation, fabrication, construction, erection, or completion of the Work, including Owner-furnished or assigned property; (b) spare parts inventory required within the scope of the Contract; and (c) temporary works which are not intended to form part of the permanent constructed Work but which are intended to provide working access to the Site, or to the Work under construction, or which are intended to provide temporary support for the Work under construction, including scaffolding, form work, fences, shoring, falsework, and temporary structures.

4. cover expenses incurred in the repair or replacement of any insured property (including but not limited to fees and charges of engineers and architects).

5. extend to cover damage or loss to insured property while in temporary storage at the Site or in a storage location outside the Site (but not including property stored at the premises of a manufacturer or Supplier).

6. extend to cover damage or loss to insured property while in transit.

7. allow for partial occupation or use of the Work by Owner, such that those portions of the Work that are not yet occupied or used by Owner shall remain covered by the builder's risk insurance.

8. allow for the waiver of the insurer's subrogation rights, as set forth below.

Copyright © 2013 National Society of Professional Engineers, American Council of Engineering Companies, and American Society of Civil Engineers. All rights reserved.

9. provide primary coverage for all losses and damages caused by the perils or causes of loss covered.

10. not include a co-insurance clause.

11. include an exception for ensuing losses from physical damage or loss with respect to any defective workmanship, design, or materials exclusions.

12. include performance/hot testing and start-up.

13. be maintained in effect, subject to the provisions herein regarding Substantial Completion and partial occupancy or use of the Work by Owner, until the Work is complete.

B. *Notice of Cancellation or Change*: All the policies of insurance (and the certificates or other evidence thereof) required to be purchased and maintained in accordance with this Paragraph 6.05 will contain a provision or endorsement that the coverage afforded will not be canceled or materially changed or renewal refused until at least 10 days prior written notice has been given to the purchasing policyholder. Within three days of receipt of any such written notice, the purchasing policyholder shall provide a copy of the notice to each other insured.

C. *Deductibles*: The purchaser of any required builder's risk or property insurance shall pay for costs not covered because of the application of a policy deductible.

D. *Partial Occupancy or Use by Owner*: If Owner will occupy or use a portion or portions of the Work prior to Substantial Completion of all the Work as provided in Paragraph 15.04, then Owner (directly, if it is the purchaser of the builder's risk policy, or through Contractor) will provide notice of such occupancy or use to the builder's risk insurer. The builder's risk insurance shall not be canceled or permitted to lapse on account of any such partial use or occupancy; rather, those portions of the Work that are occupied or used by Owner may come off the builder's risk policy, while those portions of the Work not yet occupied or used by Owner shall remain covered by the builder's risk insurance.

E. *Additional Insurance*: If Contractor elects to obtain other special insurance to be included in or supplement the builder's risk or property insurance policies provided under this Paragraph 6.05, it may do so at Contractor's expense.

F. *Insurance of Other Property*: If the express insurance provisions of the Contract do not require or address the insurance of a property item or interest, such as tools, construction equipment, or other personal property owned by Contractor, a Subcontractor, or an employee of Contractor or a Subcontractor, then the entity or individual owning such property item will be responsible for deciding whether to insure it, and if so in what amount.

6.6 *Waiver of Rights*

A. All policies purchased in accordance with Paragraph 6.05, expressly including the builder's risk policy, shall contain provisions to the effect that in the event of payment of any loss or damage the insurers will have no rights of recovery against any insureds thereunder, or

Copyright © 2013 National Society of Professional Engineers, American Council of Engineering Companies, and American Society of Civil Engineers. All rights reserved.

against Engineer or its consultants, or their officers, directors, members, partners, employees, agents, consultants, or subcontractors. Owner and Contractor waive all rights against each other and the respective officers, directors, members, partners, employees, agents, consultants, and subcontractors of each and any of them, for all losses and damages caused by, arising out of, or resulting from any of the perils or causes of loss covered by such policies and any other property insurance applicable to the Work; and, in addition, waive all such rights against Engineer, its consultants, all Subcontractors, all individuals or entities identified in the Supplementary Conditions as insureds, and the officers, directors, members, partners, employees, agents, consultants, and subcontractors of each and any of them, under such policies for losses and damages so caused. None of the above waivers shall extend to the rights that any party making such waiver may have to the proceeds of insurance held by Owner or Contractor as trustee or fiduciary, or otherwise payable under any policy so issued.

B. Owner waives all rights against Contractor, Subcontractors, and Engineer, and the officers, directors, members, partners, employees, agents, consultants and subcontractors of each and any of them, for:

1. loss due to business interruption, loss of use, or other consequential loss extending beyond direct physical loss or damage to Owner's property or the Work caused by, arising out of, or resulting from fire or other perils whether or not insured by Owner; and

2. loss or damage to the completed Project or part thereof caused by, arising out of, or resulting from fire or other insured peril or cause of loss covered by any property insurance maintained on the completed Project or part thereof by Owner during partial occupancy or use pursuant to Paragraph 15.04, after Substantial Completion pursuant to Paragraph 15.03, or after final payment pursuant to Paragraph 15.06.

C. Any insurance policy maintained by Owner covering any loss, damage or consequential loss referred to in Paragraph 6.06.B shall contain provisions to the effect that in the event of payment of any such loss, damage, or consequential loss, the insurers will have no rights of recovery against Contractor, Subcontractors, or Engineer, or the officers, directors, members, partners, employees, agents, consultants, or subcontractors of each and any of them.

D. Contractor shall be responsible for assuring that the agreement under which a Subcontractor performs a portion of the Work contains provisions whereby the Subcontractor waives all rights against Owner, Contractor, all individuals or entities identified in the Supplementary Conditions as insureds, the Engineer and its consultants, and the officers, directors, members, partners, employees, agents, consultants, and subcontractors of each and any of them, for all losses and damages caused by, arising out of, relating to, or resulting from any of the perils or causes of loss covered by builder's risk insurance and any other property insurance applicable to the Work.

Copyright © 2013 National Society of Professional Engineers, American Council of Engineering Companies, and American Society of Civil Engineers. All rights reserved.

6.7 *Receipt and Application of Property Insurance Proceeds*

A. Any insured loss under the builder's risk and other policies of insurance required by Paragraph 6.05 will be adjusted and settled with the named insured that purchased the policy. Such named insured shall act as fiduciary for the other insureds, and give notice to such other insureds that adjustment and settlement of a claim is in progress. Any other insured may state its position regarding a claim for insured loss in writing within 15 days after notice of such claim.

B. Proceeds for such insured losses may be made payable by the insurer either jointly to multiple insureds, or to the named insured that purchased the policy in its own right and as fiduciary for other insureds, subject to the requirements of any applicable mortgage clause. A named insured receiving insurance proceeds under the builder's risk and other policies of insurance required by Paragraph 6.05 shall distribute such proceeds in accordance with such agreement as the parties in interest may reach, or as otherwise required under the dispute resolution provisions of this Contract or applicable Laws and Regulations.

C. If no other special agreement is reached, the damaged Work shall be repaired or replaced, the money so received applied on account thereof, and the Work and the cost thereof covered by Change Order, if needed.

ARTICLE 7 – CONTRACTOR'S RESPONSIBILITIES

7.1 *Supervision and Superintendence*

A. Contractor shall supervise, inspect, and direct the Work competently and efficiently, devoting such attention thereto and applying such skills and expertise as may be necessary to perform the Work in accordance with the Contract Documents. Contractor shall be solely responsible for the means, methods, techniques, sequences, and procedures of construction.

B. At all times during the progress of the Work, Contractor shall assign a competent resident superintendent who shall not be replaced without written notice to Owner and Engineer except under extraordinary circumstances.

7.2 *Labor; Working Hours*

A. Contractor shall provide competent, suitably qualified personnel to survey and lay out the Work and perform construction as required by the Contract Documents. Contractor shall at all times maintain good discipline and order at the Site.

B. Except as otherwise required for the safety or protection of persons or the Work or property at the Site or adjacent thereto, and except as otherwise stated in the Contract Documents, all Work at the Site shall be performed during regular working hours, Monday through Friday. Contractor will not perform Work on a Saturday, Sunday, or any legal holiday. Contractor may perform Work outside regular working hours or on Saturdays, Sundays, or legal holidays only with Owner's written consent, which will not be unreasonably withheld.

Copyright © 2013 National Society of Professional Engineers, American Council of Engineering Companies, and American Society of Civil Engineers. All rights reserved.

7.3 *Services, Materials, and Equipment*

A. Unless otherwise specified in the Contract Documents, Contractor shall provide and assume full responsibility for all services, materials, equipment, labor, transportation, construction equipment and machinery, tools, appliances, fuel, power, light, heat, telephone, water, sanitary facilities, temporary facilities, and all other facilities and incidentals necessary for the performance, testing, start up, and completion of the Work, whether or not such items are specifically called for in the Contract Documents.

B. All materials and equipment incorporated into the Work shall be of good quality and new, except as otherwise provided in the Contract Documents. All special warranties and guarantees required by the Specifications shall expressly run to the benefit of Owner. If required by Engineer, Contractor shall furnish satisfactory evidence (including reports of required tests) as to the source, kind, and quality of materials and equipment.

C. All materials and equipment shall be stored, applied, installed, connected, erected, protected, used, cleaned, and conditioned in accordance with instructions of the applicable Supplier, except as otherwise may be provided in the Contract Documents.

7.4 *"Or Equals"*

A. Whenever an item of material or equipment is specified or described in the Contract Documents by using the name of a proprietary item or the name of a particular Supplier, the Contract Price has been based upon Contractor furnishing such item as specified. The specification or description of such an item is intended to establish the type, function, appearance, and quality required. Unless the specification or description contains or is followed by words reading that no like, equivalent, or "or equal" item is permitted, Contractor may request that Engineer authorize the use of other items of material or equipment, or items from other proposed suppliers under the circumstances described below.

1. If Engineer in its sole discretion determines that an item of material or equipment proposed by Contractor is functionally equal to that named and sufficiently similar so that no change in related Work will be required, Engineer shall deem it an "or equal" item. For the purposes of this paragraph, a proposed item of material or equipment will be considered functionally equal to an item so named if:

a. in the exercise of reasonable judgment Engineer determines that:

1) it is at least equal in materials of construction, quality, durability, appearance, strength, and design characteristics;

2) it will reliably perform at least equally well the function and achieve the results imposed by the design concept of the completed Project as a functioning whole;

3) it has a proven record of performance and availability of responsive service; and

4) it is not objectionable to Owner.

Copyright © 2013 National Society of Professional Engineers, American Council of Engineering Companies, and American Society of Civil Engineers. All rights reserved.

b. Contractor certifies that, if approved and incorporated into the Work:

1) there will be no increase in cost to the Owner or increase in Contract Times; and

2) it will conform substantially to the detailed requirements of the item named in the Contract Documents.

B. *Contractor's Expense*: Contractor shall provide all data in support of any proposed "or equal" item at Contractor's expense.

C. *Engineer's Evaluation and Determination*: Engineer will be allowed a reasonable time to evaluate each "or-equal" request. Engineer may require Contractor to furnish additional data about the proposed "or-equal" item. Engineer will be the sole judge of acceptability. No "or-equal" item will be ordered, furnished, installed, or utilized until Engineer's review is complete and Engineer determines that the proposed item is an "or-equal", which will be evidenced by an approved Shop Drawing or other written communication. Engineer will advise Contractor in writing of any negative determination.

D. *Effect of Engineer's Determination*: Neither approval nor denial of an "or-equal" request shall result in any change in Contract Price. The Engineer's denial of an "or-equal" request shall be final and binding, and may not be reversed through an appeal under any provision of the Contract Documents.

E. *Treatment as a Substitution Request*: If Engineer determines that an item of material or equipment proposed by Contractor does not qualify as an "or-equal" item, Contractor may request that Engineer considered the proposed item as a substitute pursuant to Paragraph 7.05.

7.5 *Substitutes*

A. Unless the specification or description of an item of material or equipment required to be furnished under the Contract Documents contains or is followed by words reading that no substitution is permitted, Contractor may request that Engineer authorize the use of other items of material or equipment under the circumstances described below. To the extent possible such requests shall be made before commencement of related construction at the Site.

1. Contractor shall submit sufficient information as provided below to allow Engineer to determine if the item of material or equipment proposed is functionally equivalent to that named and an acceptable substitute therefor. Engineer will not accept requests for review of proposed substitute items of material or equipment from anyone other than Contractor.

2. The requirements for review by Engineer will be as set forth in Paragraph 7.05.B, as supplemented by the Specifications, and as Engineer may decide is appropriate under the circumstances.

Copyright © 2013 National Society of Professional Engineers, American Council of Engineering Companies, and American Society of Civil Engineers. All rights reserved.

3. Contractor shall make written application to Engineer for review of a proposed substitute item of material or equipment that Contractor seeks to furnish or use. The application:

   a. shall certify that the proposed substitute item will:

      1) perform adequately the functions and achieve the results called for by the general design,

      2) be similar in substance to that specified, and

      3) be suited to the same use as that specified.

   b. will state:

      1) the extent, if any, to which the use of the proposed substitute item will necessitate a change in Contract Times,

      2) whether use of the proposed substitute item in the Work will require a change in any of the Contract Documents (or in the provisions of any other direct contract with Owner for other work on the Project) to adapt the design to the proposed substitute item, and

      3) whether incorporation or use of the proposed substitute item in connection with the Work is subject to payment of any license fee or royalty.

   c. will identify:

      1) all variations of the proposed substitute item from that specified, and

      2) available engineering, sales, maintenance, repair, and replacement services.

   d. shall contain an itemized estimate of all costs or credits that will result directly or indirectly from use of such substitute item, including but not limited to changes in Contract Price, shared savings, costs of redesign, and claims of other contractors affected by any resulting change.

B. *Engineer's Evaluation and Determination*: Engineer will be allowed a reasonable time to evaluate each substitute request, and to obtain comments and direction from Owner. Engineer may require Contractor to furnish additional data about the proposed substitute item. Engineer will be the sole judge of acceptability. No substitute will be ordered, furnished, installed, or utilized until Engineer's review is complete and Engineer determines that the proposed item is an acceptable substitute. Engineer's determination will be evidenced by a Field Order or a proposed Change Order accounting for the substitution itself and all related impacts, including changes in Contract Price or Contract Times. Engineer will advise Contractor in writing of any negative determination.

C. *Special Guarantee*: Owner may require Contractor to furnish at Contractor's expense a special performance guarantee or other surety with respect to any substitute.

D. *Reimbursement of Engineer's Cost*: Engineer will record Engineer's costs in evaluating a substitute proposed or submitted by Contractor. Whether or not Engineer approves a substitute so proposed or submitted by Contractor, Contractor shall reimburse Owner for

Copyright © 2013 National Society of Professional Engineers, American Council of Engineering Companies, and American Society of Civil Engineers. All rights reserved.

the reasonable charges of Engineer for evaluating each such proposed substitute. Contractor shall also reimburse Owner for the reasonable charges of Engineer for making changes in the Contract Documents (or in the provisions of any other direct contract with Owner) resulting from the acceptance of each proposed substitute.

E. *Contractor's Expense*: Contractor shall provide all data in support of any proposed substitute at Contractor's expense.

F. *Effect of Engineer's Determination*: If Engineer approves the substitution request, Contractor shall execute the proposed Change Order and proceed with the substitution. The Engineer's denial of a substitution request shall be final and binding, and may not be reversed through an appeal under any provision of the Contract Documents. Contractor may challenge the scope of reimbursement costs imposed under Paragraph 7.05.D, by timely submittal of a Change Proposal.

7.6 *Concerning Subcontractors, Suppliers, and Others*

A. Contractor may retain Subcontractors and Suppliers for the performance of parts of the Work. Such Subcontractors and Suppliers must be acceptable to Owner.

B. Contractor shall retain specific Subcontractors, Suppliers, or other individuals or entities for the performance of designated parts of the Work if required by the Contract to do so.

C. Subsequent to the submittal of Contractor's Bid or final negotiation of the terms of the Contract, Owner may not require Contractor to retain any Subcontractor, Supplier, or other individual or entity to furnish or perform any of the Work against which Contractor has reasonable objection.

D. Prior to entry into any binding subcontract or purchase order, Contractor shall submit to Owner the identity of the proposed Subcontractor or Supplier (unless Owner has already deemed such proposed Subcontractor or Supplier acceptable, during the bidding process or otherwise). Such proposed Subcontractor or Supplier shall be deemed acceptable to Owner unless Owner raises a substantive, reasonable objection within five days.

E. Owner may require the replacement of any Subcontractor, Supplier, or other individual or entity retained by Contractor to perform any part of the Work. Owner also may require Contractor to retain specific replacements; provided, however, that Owner may not require a replacement to which Contractor has a reasonable objection. If Contractor has submitted the identity of certain Subcontractors, Suppliers, or other individuals or entities for acceptance by Owner, and Owner has accepted it (either in writing or by failing to make written objection thereto), then Owner may subsequently revoke the acceptance of any such Subcontractor, Supplier, or other individual or entity so identified solely on the basis of substantive, reasonable objection after due investigation. Contractor shall submit an acceptable replacement for the rejected Subcontractor, Supplier, or other individual or entity.

F. If Owner requires the replacement of any Subcontractor, Supplier, or other individual or entity retained by Contractor to perform any part of the Work, then Contractor shall be entitled to an adjustment in Contract Price or Contract Times, or both, with respect to the

Copyright © 2013 National Society of Professional Engineers, American Council of Engineering Companies, and American Society of Civil Engineers. All rights reserved.

replacement; and Contractor shall initiate a Change Proposal for such adjustment within 30 days of Owner's requirement of replacement.

G. No acceptance by Owner of any such Subcontractor, Supplier, or other individual or entity, whether initially or as a replacement, shall constitute a waiver of the right of Owner to the completion of the Work in accordance with the Contract Documents.

H. On a monthly basis Contractor shall submit to Engineer a complete list of all Subcontractors and Suppliers having a direct contract with Contractor, and of all other Subcontractors and Suppliers known to Contractor at the time of submittal.

I. Contractor shall be fully responsible to Owner and Engineer for all acts and omissions of the Subcontractors, Suppliers, and other individuals or entities performing or furnishing any of the Work just as Contractor is responsible for Contractor's own acts and omissions.

J. Contractor shall be solely responsible for scheduling and coordinating the work of Subcontractors, Suppliers, and all other individuals or entities performing or furnishing any of the Work.

K. Contractor shall restrict all Subcontractors, Suppliers, and such other individuals or entities performing or furnishing any of the Work from communicating with Engineer or Owner, except through Contractor or in case of an emergency, or as otherwise expressly allowed herein.

L. The divisions and sections of the Specifications and the identifications of any Drawings shall not control Contractor in dividing the Work among Subcontractors or Suppliers or delineating the Work to be performed by any specific trade.

M. All Work performed for Contractor by a Subcontractor or Supplier shall be pursuant to an appropriate contractual agreement that specifically binds the Subcontractor or Supplier to the applicable terms and conditions of the Contract Documents for the benefit of Owner and Engineer.

N. Owner may furnish to any Subcontractor or Supplier, to the extent practicable, information about amounts paid to Contractor on account of Work performed for Contractor by the particular Subcontractor or Supplier.

O. Nothing in the Contract Documents:

1. shall create for the benefit of any such Subcontractor, Supplier, or other individual or entity any contractual relationship between Owner or Engineer and any such Subcontractor, Supplier, or other individual or entity; nor

2. shall create any obligation on the part of Owner or Engineer to pay or to see to the payment of any money due any such Subcontractor, Supplier, or other individual or entity except as may otherwise be required by Laws and Regulations.

7.7 *Patent Fees and Royalties*

A. Contractor shall pay all license fees and royalties and assume all costs incident to the use in the performance of the Work or the incorporation in the Work of any invention, design,

Copyright © 2013 National Society of Professional Engineers, American Council of Engineering Companies, and American Society of Civil Engineers. All rights reserved.

process, product, or device which is the subject of patent rights or copyrights held by others. If a particular invention, design, process, product, or device is specified in the Contract Documents for use in the performance of the Work and if, to the actual knowledge of Owner or Engineer, its use is subject to patent rights or copyrights calling for the payment of any license fee or royalty to others, the existence of such rights shall be disclosed by Owner in the Contract Documents.

B. To the fullest extent permitted by Laws and Regulations, Owner shall indemnify and hold harmless Contractor, and its officers, directors, members, partners, employees, agents, consultants, and subcontractors from and against all claims, costs, losses, and damages (including but not limited to all fees and charges of engineers, architects, attorneys, and other professionals, and all court or arbitration or other dispute resolution costs) arising out of or relating to any infringement of patent rights or copyrights incident to the use in the performance of the Work or resulting from the incorporation in the Work of any invention, design, process, product, or device specified in the Contract Documents, but not identified as being subject to payment of any license fee or royalty to others required by patent rights or copyrights.

C. To the fullest extent permitted by Laws and Regulations, Contractor shall indemnify and hold harmless Owner and Engineer, and the officers, directors, members, partners, employees, agents, consultants and subcontractors of each and any of them from and against all claims, costs, losses, and damages (including but not limited to all fees and charges of engineers, architects, attorneys, and other professionals and all court or arbitration or other dispute resolution costs) arising out of or relating to any infringement of patent rights or copyrights incident to the use in the performance of the Work or resulting from the incorporation in the Work of any invention, design, process, product, or device not specified in the Contract Documents.

7.8 *Permits*

A. Unless otherwise provided in the Contract Documents, Contractor shall obtain and pay for all construction permits and licenses. Owner shall assist Contractor, when necessary, in obtaining such permits and licenses. Contractor shall pay all governmental charges and inspection fees necessary for the prosecution of the Work which are applicable at the time of the submission of Contractor's Bid (or when Contractor became bound under a negotiated contract). Owner shall pay all charges of utility owners for connections for providing permanent service to the Work

7.9 *Taxes*

A. Contractor shall pay all sales, consumer, use, and other similar taxes required to be paid by Contractor in accordance with the Laws and Regulations of the place of the Project which are applicable during the performance of the Work.

7.10 *Laws and Regulations*

A. Contractor shall give all notices required by and shall comply with all Laws and Regulations applicable to the performance of the Work. Except where otherwise expressly required by

Copyright © 2013 National Society of Professional Engineers, American Council of Engineering Companies, and American Society of Civil Engineers. All rights reserved.

applicable Laws and Regulations, neither Owner nor Engineer shall be responsible for monitoring Contractor's compliance with any Laws or Regulations.

B. If Contractor performs any Work or takes any other action knowing or having reason to know that it is contrary to Laws or Regulations, Contractor shall bear all resulting costs and losses, and shall indemnify and hold harmless Owner and Engineer, and the officers, directors, members, partners, employees, agents, consultants, and subcontractors of each and any of them from and against all claims, costs, losses, and damages (including but not limited to all fees and charges of engineers, architects, attorneys, and other professionals and all court or arbitration or other dispute resolution costs) arising out of or relating to such Work or other action. It shall not be Contractor's responsibility to make certain that the Work described in the Contract Documents is in accordance with Laws and Regulations, but this shall not relieve Contractor of Contractor's obligations under Paragraph 3.03.

C. Owner or Contractor may give notice to the other party of any changes after the submission of Contractor's Bid (or after the date when Contractor became bound under a negotiated contract) in Laws or Regulations having an effect on the cost or time of performance of the Work, including but not limited to changes in Laws or Regulations having an effect on procuring permits and on sales, use, value-added, consumption, and other similar taxes. If Owner and Contractor are unable to agree on entitlement to or on the amount or extent, if any, of any adjustment in Contract Price or Contract Times resulting from such changes, then within 30 days of such notice Contractor may submit a Change Proposal, or Owner may initiate a Claim.

7.11 *Record Documents*

A. Contractor shall maintain in a safe place at the Site one printed record copy of all Drawings, Specifications, Addenda, Change Orders, Work Change Directives, Field Orders, written interpretations and clarifications, and approved Shop Drawings. Contractor shall keep such record documents in good order and annotate them to show changes made during construction. These record documents, together with all approved Samples, will be available to Engineer for reference. Upon completion of the Work, Contractor shall deliver these record documents to Engineer.

7.12 *Safety and Protection*

A. Contractor shall be solely responsible for initiating, maintaining, and supervising all safety precautions and programs in connection with the Work. Such responsibility does not relieve Subcontractors of their responsibility for the safety of persons or property in the performance of their work, nor for compliance with applicable safety Laws and Regulations. Contractor shall take all necessary precautions for the safety of, and shall provide the necessary protection to prevent damage, injury, or loss to:

1. all persons on the Site or who may be affected by the Work;

2. all the Work and materials and equipment to be incorporated therein, whether in storage on or off the Site; and

Copyright © 2013 National Society of Professional Engineers, American Council of Engineering Companies, and American Society of Civil Engineers. All rights reserved.

3. other property at the Site or adjacent thereto, including trees, shrubs, lawns, walks, pavements, roadways, structures, other work in progress, utilities, and Underground Facilities not designated for removal, relocation, or replacement in the course of construction.

B. Contractor shall comply with all applicable Laws and Regulations relating to the safety of persons or property, or to the protection of persons or property from damage, injury, or loss; and shall erect and maintain all necessary safeguards for such safety and protection. Contractor shall notify Owner; the owners of adjacent property, Underground Facilities, and other utilities; and other contractors and utility owners performing work at or adjacent to the Site, when prosecution of the Work may affect them, and shall cooperate with them in the protection, removal, relocation, and replacement of their property or work in progress.

C. Contractor shall comply with the applicable requirements of Owner's safety programs, if any. The Supplementary Conditions identify any Owner's safety programs that are applicable to the Work.

D. Contractor shall inform Owner and Engineer of the specific requirements of Contractor's safety program with which Owner's and Engineer's employees and representatives must comply while at the Site.

E. All damage, injury, or loss to any property referred to in Paragraph 7.12.A.2 or 7.12.A.3 caused, directly or indirectly, in whole or in part, by Contractor, any Subcontractor, Supplier, or any other individual or entity directly or indirectly employed by any of them to perform any of the Work, or anyone for whose acts any of them may be liable, shall be remedied by Contractor at its expense (except damage or loss attributable to the fault of Drawings or Specifications or to the acts or omissions of Owner or Engineer or anyone employed by any of them, or anyone for whose acts any of them may be liable, and not attributable, directly or indirectly, in whole or in part, to the fault or negligence of Contractor or any Subcontractor, Supplier, or other individual or entity directly or indirectly employed by any of them).

F. Contractor's duties and responsibilities for safety and protection shall continue until such time as all the Work is completed and Engineer has issued a notice to Owner and Contractor in accordance with Paragraph 15.06.B that the Work is acceptable (except as otherwise expressly provided in connection with Substantial Completion).

G. Contractor's duties and responsibilities for safety and protection shall resume whenever Contractor or any Subcontractor or Supplier returns to the Site to fulfill warranty or correction obligations, or to conduct other tasks arising from the Contract Documents.

7.13 *Safety Representative*

A. Contractor shall designate a qualified and experienced safety representative at the Site whose duties and responsibilities shall be the prevention of accidents and the maintaining and supervising of safety precautions and programs.

Copyright © 2013 National Society of Professional Engineers, American Council of Engineering Companies, and American Society of Civil Engineers. All rights reserved.

7.14 *Hazard Communication Programs*

A. Contractor shall be responsible for coordinating any exchange of material safety data sheets or other hazard communication information required to be made available to or exchanged between or among employers at the Site in accordance with Laws or Regulations.

7.15 *Emergencies*

A. In emergencies affecting the safety or protection of persons or the Work or property at the Site or adjacent thereto, Contractor is obligated to act to prevent threatened damage, injury, or loss. Contractor shall give Engineer prompt written notice if Contractor believes that any significant changes in the Work or variations from the Contract Documents have been caused thereby or are required as a result thereof. If Engineer determines that a change in the Contract Documents is required because of the action taken by Contractor in response to such an emergency, a Work Change Directive or Change Order will be issued.

7.16 *Shop Drawings, Samples, and Other Submittals*

A. *Shop Drawing and Sample Submittal Requirements*:

1. Before submitting a Shop Drawing or Sample, Contractor shall have:

   a. reviewed and coordinated the Shop Drawing or Sample with other Shop Drawings and Samples and with the requirements of the Work and the Contract Documents;

   b. determined and verified all field measurements, quantities, dimensions, specified performance and design criteria, installation requirements, materials, catalog numbers, and similar information with respect thereto;

   c. determined and verified the suitability of all materials and equipment offered with respect to the indicated application, fabrication, shipping, handling, storage, assembly, and installation pertaining to the performance of the Work; and

   d. determined and verified all information relative to Contractor's responsibilities for means, methods, techniques, sequences, and procedures of construction, and safety precautions and programs incident thereto.

2. Each submittal shall bear a stamp or specific written certification that Contractor has satisfied Contractor's obligations under the Contract Documents with respect to Contractor's review of that submittal, and that Contractor approves the submittal.

3. With each submittal, Contractor shall give Engineer specific written notice of any variations that the Shop Drawing or Sample may have from the requirements of the Contract Documents. This notice shall be set forth in a written communication separate from the Shop Drawings or Sample submittal; and, in addition, in the case of Shop Drawings by a specific notation made on each Shop Drawing submitted to Engineer for review and approval of each such variation.

Copyright © 2013 National Society of Professional Engineers, American Council of Engineering Companies, and American Society of Civil Engineers. All rights reserved.

B. *Submittal Procedures for Shop Drawings and Samples*: Contractor shall submit Shop Drawings and Samples to Engineer for review and approval in accordance with the accepted Schedule of Submittals. Each submittal will be identified as Engineer may require.

1. *Shop Drawings*:

   a. Contractor shall submit the number of copies required in the Specifications.

   b. Data shown on the Shop Drawings will be complete with respect to quantities, dimensions, specified performance and design criteria, materials, and similar data to show Engineer the services, materials, and equipment Contractor proposes to provide and to enable Engineer to review the information for the limited purposes required by Paragraph 7.16.D.

2. *Samples*:

   a. Contractor shall submit the number of Samples required in the Specifications.

   b. Contractor shall clearly identify each Sample as to material, Supplier, pertinent data such as catalog numbers, the use for which intended and other data as Engineer may require to enable Engineer to review the submittal for the limited purposes required by Paragraph 7.16.D.

3. Where a Shop Drawing or Sample is required by the Contract Documents or the Schedule of Submittals, any related Work performed prior to Engineer's review and approval of the pertinent submittal will be at the sole expense and responsibility of Contractor.

C. *Other Submittals*: Contractor shall submit other submittals to Engineer in accordance with the accepted Schedule of Submittals, and pursuant to the applicable terms of the Specifications.

D. *Engineer's Review*:

1. Engineer will provide timely review of Shop Drawings and Samples in accordance with the Schedule of Submittals acceptable to Engineer. Engineer's review and approval will be only to determine if the items covered by the submittals will, after installation or incorporation in the Work, conform to the information given in the Contract Documents and be compatible with the design concept of the completed Project as a functioning whole as indicated by the Contract Documents.

2. Engineer's review and approval will not extend to means, methods, techniques, sequences, or procedures of construction or to safety precautions or programs incident thereto.

3. Engineer's review and approval of a separate item as such will not indicate approval of the assembly in which the item functions.

4. Engineer's review and approval of a Shop Drawing or Sample shall not relieve Contractor from responsibility for any variation from the requirements of the Contract Documents unless Contractor has complied with the requirements of Paragraph

Copyright © 2013 National Society of Professional Engineers, American Council of Engineering Companies, and American Society of Civil Engineers. All rights reserved.

7.16.A.3 and Engineer has given written approval of each such variation by specific written notation thereof incorporated in or accompanying the Shop Drawing or Sample. Engineer will document any such approved variation from the requirements of the Contract Documents in a Field Order.

5. Engineer's review and approval of a Shop Drawing or Sample shall not relieve Contractor from responsibility for complying with the requirements of Paragraph 7.16.A and B.

6. Engineer's review and approval of a Shop Drawing or Sample, or of a variation from the requirements of the Contract Documents, shall not, under any circumstances, change the Contract Times or Contract Price, unless such changes are included in a Change Order.

7. Neither Engineer's receipt, review, acceptance or approval of a Shop Drawing, Sample, or other submittal shall result in such item becoming a Contract Document.

8. Contractor shall perform the Work in compliance with the requirements and commitments set forth in approved Shop Drawings and Samples, subject to the provisions of Paragraph 7.16.D.4.

E. *Resubmittal Procedures*:

1. Contractor shall make corrections required by Engineer and shall return the required number of corrected copies of Shop Drawings and submit, as required, new Samples for review and approval. Contractor shall direct specific attention in writing to revisions other than the corrections called for by Engineer on previous submittals.

2. Contractor shall furnish required submittals with sufficient information and accuracy to obtain required approval of an item with no more than three submittals. Engineer will record Engineer's time for reviewing a fourth or subsequent submittal of a Shop Drawings, sample, or other item requiring approval, and Contractor shall be responsible for Engineer's charges to Owner for such time. Owner may impose a set-off against payments due to Contractor to secure reimbursement for such charges.

3. If Contractor requests a change of a previously approved submittal item, Contractor shall be responsible for Engineer's charges to Owner for its review time, and Owner may impose a set-off against payments due to Contractor to secure reimbursement for such charges, unless the need for such change is beyond the control of Contractor.

7.17 *Contractor's General Warranty and Guarantee*

A. Contractor warrants and guarantees to Owner that all Work will be in accordance with the Contract Documents and will not be defective. Engineer and its officers, directors, members, partners, employees, agents, consultants, and subcontractors shall be entitled to rely on Contractor's warranty and guarantee.

Copyright © 2013 National Society of Professional Engineers, American Council of Engineering Companies, and American Society of Civil Engineers. All rights reserved.

B. Contractor's warranty and guarantee hereunder excludes defects or damage caused by:

1. abuse, modification, or improper maintenance or operation by persons other than Contractor, Subcontractors, Suppliers, or any other individual or entity for whom Contractor is responsible; or

2. normal wear and tear under normal usage.

C. Contractor's obligation to perform and complete the Work in accordance with the Contract Documents shall be absolute. None of the following will constitute an acceptance of Work that is not in accordance with the Contract Documents or a release of Contractor's obligation to perform the Work in accordance with the Contract Documents:

1. observations by Engineer;

2. recommendation by Engineer or payment by Owner of any progress or final payment;

3. the issuance of a certificate of Substantial Completion by Engineer or any payment related thereto by Owner;

4. use or occupancy of the Work or any part thereof by Owner;

5. any review and approval of a Shop Drawing or Sample submittal;

6. the issuance of a notice of acceptability by Engineer;

7. any inspection, test, or approval by others; or

8. any correction of defective Work by Owner.

D. If the Contract requires the Contractor to accept the assignment of a contract entered into by Owner, then the specific warranties, guarantees, and correction obligations contained in the assigned contract shall govern with respect to Contractor's performance obligations to Owner for the Work described in the assigned contract.

7.18 *Indemnification*

A. To the fullest extent permitted by Laws and Regulations, and in addition to any other obligations of Contractor under the Contract or otherwise, Contractor shall indemnify and hold harmless Owner and Engineer, and the officers, directors, members, partners, employees, agents, consultants and subcontractors of each and any of them from and against all claims, costs, losses, and damages (including but not limited to all fees and charges of engineers, architects, attorneys, and other professionals and all court or arbitration or other dispute resolution costs) arising out of or relating to the performance of the Work, provided that any such claim, cost, loss, or damage is attributable to bodily injury, sickness, disease, or death, or to injury to or destruction of tangible property (other than the Work itself), including the loss of use resulting therefrom but only to the extent caused by any negligent act or omission of Contractor, any Subcontractor, any Supplier, or any individual or entity directly or indirectly employed by any of them to perform any of the Work or anyone for whose acts any of them may be liable.

B. In any and all claims against Owner or Engineer or any of their officers, directors, members, partners, employees, agents, consultants, or subcontractors by any employee (or the

Copyright © 2013 National Society of Professional Engineers, American Council of Engineering Companies, and American Society of Civil Engineers. All rights reserved.

survivor or personal representative of such employee) of Contractor, any Subcontractor, any Supplier, or any individual or entity directly or indirectly employed by any of them to perform any of the Work, or anyone for whose acts any of them may be liable, the indemnification obligation under Paragraph 7.18.A shall not be limited in any way by any limitation on the amount or type of damages, compensation, or benefits payable by or for Contractor or any such Subcontractor, Supplier, or other individual or entity under workers' compensation acts, disability benefit acts, or other employee benefit acts.

C. The indemnification obligations of Contractor under Paragraph 7.18.A shall not extend to the liability of Engineer and Engineer's officers, directors, members, partners, employees, agents, consultants and subcontractors arising out of:

1. the preparation or approval of, or the failure to prepare or approve maps, Drawings, opinions, reports, surveys, Change Orders, designs, or Specifications; or

2. giving directions or instructions, or failing to give them, if that is the primary cause of the injury or damage.

7.19 *Delegation of Professional Design Services*

A. Contractor will not be required to provide professional design services unless such services are specifically required by the Contract Documents for a portion of the Work or unless such services are required to carry out Contractor's responsibilities for construction means, methods, techniques, sequences and procedures. Contractor shall not be required to provide professional services in violation of applicable Laws and Regulations.

B. If professional design services or certifications by a design professional related to systems, materials, or equipment are specifically required of Contractor by the Contract Documents, Owner and Engineer will specify all performance and design criteria that such services must satisfy. Contractor shall cause such services or certifications to be provided by a properly licensed professional, whose signature and seal shall appear on all drawings, calculations, specifications, certifications, and other submittals prepared by such professional. Shop Drawings and other submittals related to the Work designed or certified by such professional, if prepared by others, shall bear such professional's written approval when submitted to Engineer.

C. Owner and Engineer shall be entitled to rely upon the adequacy, accuracy, and completeness of the services, certifications, or approvals performed by such design professionals, provided Owner and Engineer have specified to Contractor all performance and design criteria that such services must satisfy.

D. Pursuant to this paragraph, Engineer's review and approval of design calculations and design drawings will be only for the limited purpose of checking for conformance with performance and design criteria given and the design concept expressed in the Contract Documents. Engineer's review and approval of Shop Drawings and other submittals (except design calculations and design drawings) will be only for the purpose stated in Paragraph 7.16.D.1.

Copyright © 2013 National Society of Professional Engineers, American Council of Engineering Companies, and American Society of Civil Engineers. All rights reserved.

E. Contractor shall not be responsible for the adequacy of the performance or design criteria specified by Owner or Engineer.

ARTICLE 8 – OTHER WORK AT THE SITE

8.1 *Other Work*

A. In addition to and apart from the Work under the Contract Documents, the Owner may perform other work at or adjacent to the Site. Such other work may be performed by Owner's employees, or through contracts between the Owner and third parties. Owner may also arrange to have third-party utility owners perform work on their utilities and facilities at or adjacent to the Site.

B. If Owner performs other work at or adjacent to the Site with Owner's employees, or through contracts for such other work, then Owner shall give Contractor written notice thereof prior to starting any such other work. If Owner has advance information regarding the start of any utility work at or adjacent to the Site, Owner shall provide such information to Contractor.

C. Contractor shall afford each other contractor that performs such other work, each utility owner performing other work, and Owner, if Owner is performing other work with Owner's employees, proper and safe access to the Site, and provide a reasonable opportunity for the introduction and storage of materials and equipment and the execution of such other work. Contractor shall do all cutting, fitting, and patching of the Work that may be required to properly connect or otherwise make its several parts come together and properly integrate with such other work. Contractor shall not endanger any work of others by cutting, excavating, or otherwise altering such work; provided, however, that Contractor may cut or alter others' work with the written consent of Engineer and the others whose work will be affected.

D. If the proper execution or results of any part of Contractor's Work depends upon work performed by others under this Article 8, Contractor shall inspect such other work and promptly report to Engineer in writing any delays, defects, or deficiencies in such other work that render it unavailable or unsuitable for the proper execution and results of Contractor's Work. Contractor's failure to so report will constitute an acceptance of such other work as fit and proper for integration with Contractor's Work except for latent defects and deficiencies in such other work.

8.2 *Coordination*

A. If Owner intends to contract with others for the performance of other work at or adjacent to the Site, to perform other work at or adjacent to the Site with Owner's employees, or to arrange to have utility owners perform work at or adjacent to the Site, the following will be set forth in the Supplementary Conditions or provided to Contractor prior to the start of any such other work:

1. the identity of the individual or entity that will have authority and responsibility for coordination of the activities among the various contractors;

Copyright © 2013 National Society of Professional Engineers, American Council of Engineering Companies, and American Society of Civil Engineers. All rights reserved.

2. an itemization of the specific matters to be covered by such authority and responsibility; and

3. the extent of such authority and responsibilities.

B. Unless otherwise provided in the Supplementary Conditions, Owner shall have sole authority and responsibility for such coordination.

8.3 *Legal Relationships*

A. If, in the course of performing other work at or adjacent to the Site for Owner, the Owner's employees, any other contractor working for Owner, or any utility owner for whom the Owner is responsible causes damage to the Work or to the property of Contractor or its Subcontractors, or delays, disrupts, interferes with, or increases the scope or cost of the performance of the Work, through actions or inaction, then Contractor shall be entitled to an equitable adjustment in the Contract Price or the Contract Times, or both. Contractor must submit any Change Proposal seeking an equitable adjustment in the Contract Price or the Contract Times under this paragraph within 30 days of the damaging, delaying, disrupting, or interfering event. The entitlement to, and extent of, any such equitable adjustment shall take into account information (if any) regarding such other work that was provided to Contractor in the Contract Documents prior to the submittal of the Bid or the final negotiation of the terms of the Contract. When applicable, any such equitable adjustment in Contract Price shall be conditioned on Contractor assigning to Owner all Contractor's rights against such other contractor or utility owner with respect to the damage, delay, disruption, or interference that is the subject of the adjustment. Contractor's entitlement to an adjustment of the Contract Times is conditioned on such adjustment being essential to Contractor's ability to complete the Work within the Contract Times.

B. Contractor shall take reasonable and customary measures to avoid damaging, delaying, disrupting, or interfering with the work of Owner, any other contractor, or any utility owner performing other work at or adjacent to the Site. If Contractor fails to take such measures and as a result damages, delays, disrupts, or interferes with the work of any such other contractor or utility owner, then Owner may impose a set-off against payments due to Contractor, and assign to such other contractor or utility owner the Owner's contractual rights against Contractor with respect to the breach of the obligations set forth in this paragraph.

C. When Owner is performing other work at or adjacent to the Site with Owner's employees, Contractor shall be liable to Owner for damage to such other work, and for the reasonable direct delay, disruption, and interference costs incurred by Owner as a result of Contractor's failure to take reasonable and customary measures with respect to Owner's other work. In response to such damage, delay, disruption, or interference, Owner may impose a set-off against payments due to Contractor.

D. If Contractor damages, delays, disrupts, or interferes with the work of any other contractor, or any utility owner performing other work at or adjacent to the Site, through Contractor's failure to take reasonable and customary measures to avoid such impacts, or if any claim

Copyright © 2013 National Society of Professional Engineers, American Council of Engineering Companies, and American Society of Civil Engineers. All rights reserved.

arising out of Contractor's actions, inactions, or negligence in performance of the Work at or adjacent to the Site is made by any such other contractor or utility owner against Contractor, Owner, or Engineer, then Contractor shall (1) promptly attempt to settle the claim as to all parties through negotiations with such other contractor or utility owner, or otherwise resolve the claim by arbitration or other dispute resolution proceeding or at law, and (2) indemnify and hold harmless Owner and Engineer, and the officers, directors, members, partners, employees, agents, consultants and subcontractors of each and any of them from and against any such claims, and against all costs, losses, and damages (including but not limited to all fees and charges of engineers, architects, attorneys, and other professionals and all court or arbitration or other dispute resolution costs) arising out of or relating to such damage, delay, disruption, or interference.

ARTICLE 9 – OWNER'S RESPONSIBILITIES

9.1 *Communications to Contractor*

A. Except as otherwise provided in these General Conditions, Owner shall issue all communications to Contractor through Engineer.

9.2 *Replacement of Engineer*

A. Owner may at its discretion appoint an engineer to replace Engineer, provided Contractor makes no reasonable objection to the replacement engineer. The replacement engineer's status under the Contract Documents shall be that of the former Engineer.

9.3 *Furnish Data*

A. Owner shall promptly furnish the data required of Owner under the Contract Documents.

9.4 *Pay When Due*

A. Owner shall make payments to Contractor when they are due as provided in the Agreement.

9.5 *Lands and Easements; Reports, Tests, and Drawings*

A. Owner's duties with respect to providing lands and easements are set forth in Paragraph 5.01.

B. Owner's duties with respect to providing engineering surveys to establish reference points are set forth in Paragraph 4.03.

C. Article 5 refers to Owner's identifying and making available to Contractor copies of reports of explorations and tests of conditions at the Site, and drawings of physical conditions relating to existing surface or subsurface structures at the Site.

9.6 *Insurance*

A. Owner's responsibilities, if any, with respect to purchasing and maintaining liability and property insurance are set forth in Article 6.

Copyright © 2013 National Society of Professional Engineers, American Council of Engineering Companies, and American Society of Civil Engineers. All rights reserved.

9.7 *Change Orders*

A. Owner's responsibilities with respect to Change Orders are set forth in Article 11.

9.8 *Inspections, Tests, and Approvals*

A. Owner's responsibility with respect to certain inspections, tests, and approvals is set forth in Paragraph 14.02.B.

9.9 *Limitations on Owner's Responsibilities*

A. The Owner shall not supervise, direct, or have control or authority over, nor be responsible for, Contractor's means, methods, techniques, sequences, or procedures of construction, or the safety precautions and programs incident thereto, or for any failure of Contractor to comply with Laws and Regulations applicable to the performance of the Work. Owner will not be responsible for Contractor's failure to perform the Work in accordance with the Contract Documents.

9.10 *Undisclosed Hazardous Environmental Condition*

A. Owner's responsibility in respect to an undisclosed Hazardous Environmental Condition is set forth in Paragraph 5.06.

9.11 *Evidence of Financial Arrangements*

A. Upon request of Contractor, Owner shall furnish Contractor reasonable evidence that financial arrangements have been made to satisfy Owner's obligations under the Contract Documents (including obligations under proposed changes in the Work).

9.12 *Safety Programs*

A. While at the Site, Owner's employees and representatives shall comply with the specific applicable requirements of Contractor's safety programs of which Owner has been informed.

B. Owner shall furnish copies of any applicable Owner safety programs to Contractor.

ARTICLE 10 – ENGINEER'S STATUS DURING CONSTRUCTION

10.1 *Owner's Representative*

A. Engineer will be Owner's representative during the construction period. The duties and responsibilities and the limitations of authority of Engineer as Owner's representative during construction are set forth in the Contract.

10.2 *Visits to Site*

A. Engineer will make visits to the Site at intervals appropriate to the various stages of construction as Engineer deems necessary in order to observe as an experienced and qualified design professional the progress that has been made and the quality of the various aspects of Contractor's executed Work. Based on information obtained during such visits and observations, Engineer, for the benefit of Owner, will determine, in general, if the Work is proceeding in accordance with the Contract Documents. Engineer will not be

Copyright © 2013 National Society of Professional Engineers, American Council of Engineering Companies, and American Society of Civil Engineers. All rights reserved.

required to make exhaustive or continuous inspections on the Site to check the quality or quantity of the Work. Engineer's efforts will be directed toward providing for Owner a greater degree of confidence that the completed Work will conform generally to the Contract Documents. On the basis of such visits and observations, Engineer will keep Owner informed of the progress of the Work and will endeavor to guard Owner against defective Work.

B. Engineer's visits and observations are subject to all the limitations on Engineer's authority and responsibility set forth in Paragraph 10.08. Particularly, but without limitation, during or as a result of Engineer's visits or observations of Contractor's Work, Engineer will not supervise, direct, control, or have authority over or be responsible for Contractor's means, methods, techniques, sequences, or procedures of construction, or the safety precautions and programs incident thereto, or for any failure of Contractor to comply with Laws and Regulations applicable to the performance of the Work.

10.3 *Project Representative*

A. If Owner and Engineer have agreed that Engineer will furnish a Resident Project Representative to represent Engineer at the Site and assist Engineer in observing the progress and quality of the Work, then the authority and responsibilities of any such Resident Project Representative will be as provided in the Supplementary Conditions, and limitations on the responsibilities thereof will be as provided in Paragraph 10.08. If Owner designates another representative or agent to represent Owner at the Site who is not Engineer's consultant, agent, or employee, the responsibilities and authority and limitations thereon of such other individual or entity will be as provided in the Supplementary Conditions.

10.4 *Rejecting Defective Work*

A. Engineer has the authority to reject Work in accordance with Article 14.

10.5 *Shop Drawings, Change Orders and Payments*

A. Engineer's authority, and limitations thereof, as to Shop Drawings and Samples, are set forth in Paragraph 7.16.

B. Engineer's authority, and limitations thereof, as to design calculations and design drawings submitted in response to a delegation of professional design services, if any, are set forth in Paragraph 7.19.

C. Engineer's authority as to Change Orders is set forth in Article 11.

D. Engineer's authority as to Applications for Payment is set forth in Article 15.

10.6 *Determinations for Unit Price Work*

A. Engineer will determine the actual quantities and classifications of Unit Price Work performed by Contractor as set forth in Paragraph 13.03.

Copyright © 2013 National Society of Professional Engineers, American Council of Engineering Companies, and American Society of Civil Engineers. All rights reserved.

10.7 *Decisions on Requirements of Contract Documents and Acceptability of Work*

A. Engineer will render decisions regarding the requirements of the Contract Documents, and judge the acceptability of the Work, pursuant to the specific procedures set forth herein for initial interpretations, Change Proposals, and acceptance of the Work. In rendering such decisions and judgments, Engineer will not show partiality to Owner or Contractor, and will not be liable to Owner, Contractor, or others in connection with any proceedings, interpretations, decisions, or judgments conducted or rendered in good faith.

10.8 *Limitations on Engineer's Authority and Responsibilities*

A. Neither Engineer's authority or responsibility under this Article 10 or under any other provision of the Contract, nor any decision made by Engineer in good faith either to exercise or not exercise such authority or responsibility or the undertaking, exercise, or performance of any authority or responsibility by Engineer, shall create, impose, or give rise to any duty in contract, tort, or otherwise owed by Engineer to Contractor, any Subcontractor, any Supplier, any other individual or entity, or to any surety for or employee or agent of any of them.

B. Engineer will not supervise, direct, control, or have authority over or be responsible for Contractor's means, methods, techniques, sequences, or procedures of construction, or the safety precautions and programs incident thereto, or for any failure of Contractor to comply with Laws and Regulations applicable to the performance of the Work. Engineer will not be responsible for Contractor's failure to perform the Work in accordance with the Contract Documents.

C. Engineer will not be responsible for the acts or omissions of Contractor or of any Subcontractor, any Supplier, or of any other individual or entity performing any of the Work.

D. Engineer's review of the final Application for Payment and accompanying documentation and all maintenance and operating instructions, schedules, guarantees, bonds, certificates of inspection, tests and approvals, and other documentation required to be delivered by Paragraph 15.06.A will only be to determine generally that their content complies with the requirements of, and in the case of certificates of inspections, tests, and approvals, that the results certified indicate compliance with the Contract Documents.

E. The limitations upon authority and responsibility set forth in this Paragraph 10.08 shall also apply to the Resident Project Representative, if any.

10.9 *Compliance with Safety Program*

A. While at the Site, Engineer's employees and representatives will comply with the specific applicable requirements of Owner's and Contractor's safety programs (if any) of which Engineer has been informed.

Copyright © 2013 National Society of Professional Engineers, American Council of Engineering Companies, and American Society of Civil Engineers. All rights reserved.

ARTICLE 11 – AMENDING THE CONTRACT DOCUMENTS; CHANGES IN THE WORK

11.1 *Amending and Supplementing Contract Documents*

A. The Contract Documents may be amended or supplemented by a Change Order, a Work Change Directive, or a Field Order.

1. *Change Orders*:

a. If an amendment or supplement to the Contract Documents includes a change in the Contract Price or the Contract Times, such amendment or supplement must be set forth in a Change Order. A Change Order also may be used to establish amendments and supplements of the Contract Documents that do not affect the Contract Price or Contract Times.

b. Owner and Contractor may amend those terms and conditions of the Contract Documents that do not involve (1) the performance or acceptability of the Work, (2) the design (as set forth in the Drawings, Specifications, or otherwise), or (3) other engineering or technical matters, without the recommendation of the Engineer. Such an amendment shall be set forth in a Change Order.

2. *Work Change Directives*: A Work Change Directive will not change the Contract Price or the Contract Times but is evidence that the parties expect that the modification ordered or documented by a Work Change Directive will be incorporated in a subsequently issued Change Order, following negotiations by the parties as to the Work Change Directive's effect, if any, on the Contract Price and Contract Times; or, if negotiations are unsuccessful, by a determination under the terms of the Contract Documents governing adjustments, expressly including Paragraph 11.04 regarding change of Contract Price. Contractor must submit any Change Proposal seeking an adjustment of the Contract Price or the Contract Times, or both, no later than 30 days after the completion of the Work set out in the Work Change Directive. Owner must submit any Claim seeking an adjustment of the Contract Price or the Contract Times, or both, no later than 60 days after issuance of the Work Change Directive.

3. *Field Orders*: Engineer may authorize minor changes in the Work if the changes do not involve an adjustment in the Contract Price or the Contract Times and are compatible with the design concept of the completed Project as a functioning whole as indicated by the Contract Documents. Such changes will be accomplished by a Field Order and will be binding on Owner and also on Contractor, which shall perform the Work involved promptly. If Contractor believes that a Field Order justifies an adjustment in the Contract Price or Contract Times, or both, then before proceeding with the Work at issue, Contractor shall submit a Change Proposal as provided herein.

11.2 *Owner-Authorized Changes in the Work*

A. Without invalidating the Contract and without notice to any surety, Owner may, at any time or from time to time, order additions, deletions, or revisions in the Work. Such changes shall be supported by Engineer's recommendation, to the extent the change involves the design (as set forth in the Drawings, Specifications, or otherwise), or other

Copyright © 2013 National Society of Professional Engineers, American Council of Engineering Companies, and American Society of Civil Engineers. All rights reserved.

engineering or technical matters. Such changes may be accomplished by a Change Order, if Owner and Contractor have agreed as to the effect, if any, of the changes on Contract Times or Contract Price; or by a Work Change Directive. Upon receipt of any such document, Contractor shall promptly proceed with the Work involved; or, in the case of a deletion in the Work, promptly cease construction activities with respect to such deleted Work. Added or revised Work shall be performed under the applicable conditions of the Contract Documents. Nothing in this paragraph shall obligate Contractor to undertake work that Contractor reasonably concludes cannot be performed in a manner consistent with Contractor's safety obligations under the Contract Documents or Laws and Regulations.

11.3 *Unauthorized Changes in the Work*

A. Contractor shall not be entitled to an increase in the Contract Price or an extension of the Contract Times with respect to any work performed that is not required by the Contract Documents, as amended, modified, or supplemented, except in the case of an emergency as provided in Paragraph 7.15 or in the case of uncovering Work as provided in Paragraph 14.05.

11.4 *Change of Contract Price*

A. The Contract Price may only be changed by a Change Order. Any Change Proposal for an adjustment in the Contract Price shall comply with the provisions of Paragraph 11.06. Any Claim for an adjustment of Contract Price shall comply with the provisions of Article 12.

B. An adjustment in the Contract Price will be determined as follows:

1. where the Work involved is covered by unit prices contained in the Contract Documents, then by application of such unit prices to the quantities of the items involved (subject to the provisions of Paragraph 13.03); or

2. where the Work involved is not covered by unit prices contained in the Contract Documents, then by a mutually agreed lump sum (which may include an allowance for overhead and profit not necessarily in accordance with Paragraph 11.04.C.2); or

3. where the Work involved is not covered by unit prices contained in the Contract Documents and the parties do not reach mutual agreement to a lump sum, then on the basis of the Cost of the Work (determined as provided in Paragraph 13.01) plus a Contractor's fee for overhead and profit (determined as provided in Paragraph 11.04.C).

C. *Contractor's Fee*: When applicable, the Contractor's fee for overhead and profit shall be determined as follows:

1. a mutually acceptable fixed fee; or

2. if a fixed fee is not agreed upon, then a fee based on the following percentages of the various portions of the Cost of the Work:

a. for costs incurred under Paragraphs 13.01.B.1 and 13.01.B.2, the Contractor's fee shall be 15 percent;

Copyright © 2013 National Society of Professional Engineers, American Council of Engineering Companies, and American Society of Civil Engineers. All rights reserved.

b. for costs incurred under Paragraph 13.01.B.3, the Contractor's fee shall be five percent;

c. where one or more tiers of subcontracts are on the basis of Cost of the Work plus a fee and no fixed fee is agreed upon, the intent of Paragraphs 11.04.C.2.a and 11.04.C.2.b is that the Contractor's fee shall be based on: (1) a fee of 15 percent of the costs incurred under Paragraphs 13.01.A.1 and 13.01.A.2 by the Subcontractor that actually performs the Work, at whatever tier, and (2) with respect to Contractor itself and to any Subcontractors of a tier higher than that of the Subcontractor that actually performs the Work, a fee of five percent of the amount (fee plus underlying costs incurred) attributable to the next lower tier Subcontractor; provided, however, that for any such subcontracted work the maximum total fee to be paid by Owner shall be no greater than 27 percent of the costs incurred by the Subcontractor that actually performs the work;

d. no fee shall be payable on the basis of costs itemized under Paragraphs 13.01.B.4, 13.01.B.5, and 13.01.C;

e. the amount of credit to be allowed by Contractor to Owner for any change which results in a net decrease in cost will be the amount of the actual net decrease in cost plus a deduction in Contractor's fee by an amount equal to five percent of such net decrease; and

f. when both additions and credits are involved in any one change, the adjustment in Contractor's fee shall be computed on the basis of the net change in accordance with Paragraphs 11.04.C.2.a through 11.04.C.2.e, inclusive.

11.5 *Change of Contract Times*

A. The Contract Times may only be changed by a Change Order. Any Change Proposal for an adjustment in the Contract Times shall comply with the provisions of Paragraph 11.06. Any Claim for an adjustment in the Contract Times shall comply with the provisions of Article 12.

B. An adjustment of the Contract Times shall be subject to the limitations set forth in Paragraph 4.05, concerning delays in Contractor's progress.

11.6 *Change Proposals*

A. Contractor shall submit a Change Proposal to Engineer to request an adjustment in the Contract Times or Contract Price; appeal an initial decision by Engineer concerning the requirements of the Contract Documents or relating to the acceptability of the Work under the Contract Documents; contest a set-off against payment due; or seek other relief under the Contract. The Change Proposal shall specify any proposed change in Contract Times or Contract Price, or both, or other proposed relief, and explain the reason for the proposed change, with citations to any governing or applicable provisions of the Contract Documents.

1. *Procedures*: Contractor shall submit each Change Proposal to Engineer promptly (but in no event later than 30 days) after the start of the event giving rise thereto, or after such initial decision. The Contractor shall submit supporting data, including the

Copyright © 2013 National Society of Professional Engineers, American Council of Engineering Companies, and American Society of Civil Engineers. All rights reserved.

proposed change in Contract Price or Contract Time (if any), to the Engineer and Owner within 15 days after the submittal of the Change Proposal. The supporting data shall be accompanied by a written statement that the supporting data are accurate and complete, and that any requested time or price adjustment is the entire adjustment to which Contractor believes it is entitled as a result of said event. Engineer will advise Owner regarding the Change Proposal, and consider any comments or response from Owner regarding the Change Proposal.

2. *Engineer's Action*: Engineer will review each Change Proposal and, within 30 days after receipt of the Contractor's supporting data, either deny the Change Proposal in whole, approve it in whole, or deny it in part and approve it in part. Such actions shall be in writing, with a copy provided to Owner and Contractor. If Engineer does not take action on the Change Proposal within 30 days, then either Owner or Contractor may at any time thereafter submit a letter to the other party indicating that as a result of Engineer's inaction the Change Proposal is deemed denied, thereby commencing the time for appeal of the denial under Article 12.

3. *Binding Decision*: Engineer's decision will be final and binding upon Owner and Contractor, unless Owner or Contractor appeals the decision by filing a Claim under Article 12.

B. *Resolution of Certain Change Proposals*: If the Change Proposal does not involve the design (as set forth in the Drawings, Specifications, or otherwise), the acceptability of the Work, or other engineering or technical matters, then Engineer will notify the parties that the Engineer is unable to resolve the Change Proposal. For purposes of further resolution of such a Change Proposal, such notice shall be deemed a denial, and Contractor may choose to seek resolution under the terms of Article 12.

11.7 *Execution of Change Orders*

A. Owner and Contractor shall execute appropriate Change Orders covering:

1. changes in the Contract Price or Contract Times which are agreed to by the parties, including any undisputed sum or amount of time for Work actually performed in accordance with a Work Change Directive;

2. changes in Contract Price resulting from an Owner set-off, unless Contractor has duly contested such set-off;

3. changes in the Work which are: (a) ordered by Owner pursuant to Paragraph 11.02, (b) required because of Owner's acceptance of defective Work under Paragraph 14.04 or Owner's correction of defective Work under Paragraph 14.07, or (c) agreed to by the parties, subject to the need for Engineer's recommendation if the change in the Work involves the design (as set forth in the Drawings, Specifications, or otherwise), or other engineering or technical matters; and

4. changes in the Contract Price or Contract Times, or other changes, which embody the substance of any final and binding results under Paragraph 11.06, or Article 12.

Copyright © 2013 National Society of Professional Engineers, American Council of Engineering Companies, and American Society of Civil Engineers. All rights reserved.

B. If Owner or Contractor refuses to execute a Change Order that is required to be executed under the terms of this Paragraph 11.07, it shall be deemed to be of full force and effect, as if fully executed.

11.8 *Notification to Surety*

A. If the provisions of any bond require notice to be given to a surety of any change affecting the general scope of the Work or the provisions of the Contract Documents (including, but not limited to, Contract Price or Contract Times), the giving of any such notice will be Contractor's responsibility. The amount of each applicable bond will be adjusted to reflect the effect of any such change.

ARTICLE 12 – CLAIMS

12.1 *Claims*

A. *Claims Process*: The following disputes between Owner and Contractor shall be submitted to the Claims process set forth in this Article:

1. Appeals by Owner or Contractor of Engineer's decisions regarding Change Proposals;

2. Owner demands for adjustments in the Contract Price or Contract Times, or other relief under the Contract Documents; and

3. Disputes that Engineer has been unable to address because they do not involve the design (as set forth in the Drawings, Specifications, or otherwise), the acceptability of the Work, or other engineering or technical matters.

B. *Submittal of Claim*: The party submitting a Claim shall deliver it directly to the other party to the Contract promptly (but in no event later than 30 days) after the start of the event giving rise thereto; in the case of appeals regarding Change Proposals within 30 days of the decision under appeal. The party submitting the Claim shall also furnish a copy to the Engineer, for its information only. The responsibility to substantiate a Claim shall rest with the party making the Claim. In the case of a Claim by Contractor seeking an increase in the Contract Times or Contract Price, or both, Contractor shall certify that the Claim is made in good faith, that the supporting data are accurate and complete, and that to the best of Contractor's knowledge and belief the amount of time or money requested accurately reflects the full amount to which Contractor is entitled.

C. *Review and Resolution*: The party receiving a Claim shall review it thoroughly, giving full consideration to its merits. The two parties shall seek to resolve the Claim through the exchange of information and direct negotiations. The parties may extend the time for resolving the Claim by mutual agreement. All actions taken on a Claim shall be stated in writing and submitted to the other party, with a copy to Engineer.

D. *Mediation*:

1. At any time after initiation of a Claim, Owner and Contractor may mutually agree to mediation of the underlying dispute. The agreement to mediate shall stay the Claim submittal and response process.

Copyright © 2013 National Society of Professional Engineers, American Council of Engineering Companies, and American Society of Civil Engineers. All rights reserved.

2. If Owner and Contractor agree to mediation, then after 60 days from such agreement, either Owner or Contractor may unilaterally terminate the mediation process, and the Claim submittal and decision process shall resume as of the date of the termination. If the mediation proceeds but is unsuccessful in resolving the dispute, the Claim submittal and decision process shall resume as of the date of the conclusion of the mediation, as determined by the mediator.

3. Owner and Contractor shall each pay one-half of the mediator's fees and costs.

E. *Partial Approval*: If the party receiving a Claim approves the Claim in part and denies it in part, such action shall be final and binding unless within 30 days of such action the other party invokes the procedure set forth in Article 17 for final resolution of disputes.

F. *Denial of Claim*: If efforts to resolve a Claim are not successful, the party receiving the Claim may deny it by giving written notice of denial to the other party. If the receiving party does not take action on the Claim within 90 days, then either Owner or Contractor may at any time thereafter submit a letter to the other party indicating that as a result of the inaction, the Claim is deemed denied, thereby commencing the time for appeal of the denial. A denial of the Claim shall be final and binding unless within 30 days of the denial the other party invokes the procedure set forth in Article 17 for the final resolution of disputes.

G. *Final and Binding Results*: If the parties reach a mutual agreement regarding a Claim, whether through approval of the Claim, direct negotiations, mediation, or otherwise; or if a Claim is approved in part and denied in part, or denied in full, and such actions become final and binding; then the results of the agreement or action on the Claim shall be incorporated in a Change Order to the extent they affect the Contract, including the Work, the Contract Times, or the Contract Price.

ARTICLE 13 – COST OF THE WORK; ALLOWANCES; UNIT PRICE WORK

13.1 *Cost of the Work*

A. *Purposes for Determination of Cost of the Work*: The term Cost of the Work means the sum of all costs necessary for the proper performance of the Work at issue, as further defined below. The provisions of this Paragraph 13.01 are used for two distinct purposes:

1. To determine Cost of the Work when Cost of the Work is a component of the Contract Price, under cost-plus-fee, time-and-materials, or other cost-based terms; or

2. To determine the value of a Change Order, Change Proposal, Claim, set-off, or other adjustment in Contract Price. When the value of any such adjustment is determined on the basis of Cost of the Work, Contractor is entitled only to those additional or incremental costs required because of the change in the Work or because of the event giving rise to the adjustment.

B. *Costs Included*: Except as otherwise may be agreed to in writing by Owner, costs included in the Cost of the Work shall be in amounts no higher than those prevailing in the locality of the Project, shall not include any of the costs itemized in Paragraph 13.01.C, and shall include only the following items:

Copyright © 2013 National Society of Professional Engineers, American Council of Engineering Companies, and American Society of Civil Engineers. All rights reserved.

1. Payroll costs for employees in the direct employ of Contractor in the performance of the Work under schedules of job classifications agreed upon by Owner and Contractor. Such employees shall include, without limitation, superintendents, foremen, and other personnel employed full time on the Work. Payroll costs for employees not employed full time on the Work shall be apportioned on the basis of their time spent on the Work. Payroll costs shall include, but not be limited to, salaries and wages plus the cost of fringe benefits, which shall include social security contributions, unemployment, excise, and payroll taxes, workers' compensation, health and retirement benefits, bonuses, sick leave, and vacation and holiday pay applicable thereto. The expenses of performing Work outside of regular working hours, on Saturday, Sunday, or legal holidays, shall be included in the above to the extent authorized by Owner.

2. Cost of all materials and equipment furnished and incorporated in the Work, including costs of transportation and storage thereof, and Suppliers' field services required in connection therewith. All cash discounts shall accrue to Contractor unless Owner deposits funds with Contractor with which to make payments, in which case the cash discounts shall accrue to Owner. All trade discounts, rebates, and refunds and returns from sale of surplus materials and equipment shall accrue to Owner, and Contractor shall make provisions so that they may be obtained.

3. Payments made by Contractor to Subcontractors for Work performed by Subcontractors. If required by Owner, Contractor shall obtain competitive bids from subcontractors acceptable to Owner and Contractor and shall deliver such bids to Owner, who will then determine, with the advice of Engineer, which bids, if any, will be acceptable. If any subcontract provides that the Subcontractor is to be paid on the basis of Cost of the Work plus a fee, the Subcontractor's Cost of the Work and fee shall be determined in the same manner as Contractor's Cost of the Work and fee as provided in this Paragraph 13.01.

4. Costs of special consultants (including but not limited to engineers, architects, testing laboratories, surveyors, attorneys, and accountants) employed for services specifically related to the Work.

5. Supplemental costs including the following:

    a. The proportion of necessary transportation, travel, and subsistence expenses of Contractor's employees incurred in discharge of duties connected with the Work.

    b. Cost, including transportation and maintenance, of all materials, supplies, equipment, machinery, appliances, office, and temporary facilities at the Site, and hand tools not owned by the workers, which are consumed in the performance of the Work, and cost, less market value, of such items used but not consumed which remain the property of Contractor.

    c. Rentals of all construction equipment and machinery, and the parts thereof, whether rented from Contractor or others in accordance with rental agreements approved by Owner with the advice of Engineer, and the costs of transportation,

Copyright © 2013 National Society of Professional Engineers, American Council of Engineering Companies, and American Society of Civil Engineers. All rights reserved.

loading, unloading, assembly, dismantling, and removal thereof. All such costs shall be in accordance with the terms of said rental agreements. The rental of any such equipment, machinery, or parts shall cease when the use thereof is no longer necessary for the Work.

d. Sales, consumer, use, and other similar taxes related to the Work, and for which Contractor is liable, as imposed by Laws and Regulations.

e. Deposits lost for causes other than negligence of Contractor, any Subcontractor, or anyone directly or indirectly employed by any of them or for whose acts any of them may be liable, and royalty payments and fees for permits and licenses.

f. Losses and damages (and related expenses) caused by damage to the Work, not compensated by insurance or otherwise, sustained by Contractor in connection with the performance of the Work (except losses and damages within the deductible amounts of property insurance established in accordance with Paragraph 6.05), provided such losses and damages have resulted from causes other than the negligence of Contractor, any Subcontractor, or anyone directly or indirectly employed by any of them or for whose acts any of them may be liable. Such losses shall include settlements made with the written consent and approval of Owner. No such losses, damages, and expenses shall be included in the Cost of the Work for the purpose of determining Contractor's fee.

g. The cost of utilities, fuel, and sanitary facilities at the Site.

h. Minor expenses such as communication service at the Site, express and courier services, and similar petty cash items in connection with the Work.

i. The costs of premiums for all bonds and insurance that Contractor is required by the Contract Documents to purchase and maintain.

C. *Costs Excluded*: The term Cost of the Work shall not include any of the following items:

1. Payroll costs and other compensation of Contractor's officers, executives, principals (of partnerships and sole proprietorships), general managers, safety managers, engineers, architects, estimators, attorneys, auditors, accountants, purchasing and contracting agents, expediters, timekeepers, clerks, and other personnel employed by Contractor, whether at the Site or in Contractor's principal or branch office for general administration of the Work and not specifically included in the agreed upon schedule of job classifications referred to in Paragraph 13.01.B.1 or specifically covered by Paragraph 13.01.B.4. The payroll costs and other compensation excluded here are to be considered administrative costs covered by the Contractor's fee.

2. Expenses of Contractor's principal and branch offices other than Contractor's office at the Site.

3. Any part of Contractor's capital expenses, including interest on Contractor's capital employed for the Work and charges against Contractor for delinquent payments.

Copyright © 2013 National Society of Professional Engineers, American Council of Engineering Companies, and American Society of Civil Engineers. All rights reserved.

4. Costs due to the negligence of Contractor, any Subcontractor, or anyone directly or indirectly employed by any of them or for whose acts any of them may be liable, including but not limited to, the correction of defective Work, disposal of materials or equipment wrongly supplied, and making good any damage to property.

5. Other overhead or general expense costs of any kind and the costs of any item not specifically and expressly included in Paragraph 13.01.B.

D. *Contractor's Fee*: When the Work as a whole is performed on the basis of cost-plus, Contractor's fee shall be determined as set forth in the Agreement. When the value of any Work covered by a Change Order, Change Proposal, Claim, set-off, or other adjustment in Contract Price is determined on the basis of Cost of the Work, Contractor's fee shall be determined as set forth in Paragraph 11.04.C.

E. *Documentation*: Whenever the Cost of the Work for any purpose is to be determined pursuant to this Article 13, Contractor will establish and maintain records thereof in accordance with generally accepted accounting practices and submit in a form acceptable to Engineer an itemized cost breakdown together with supporting data.

13.2 *Allowances*

A. It is understood that Contractor has included in the Contract Price all allowances so named in the Contract Documents and shall cause the Work so covered to be performed for such sums and by such persons or entities as may be acceptable to Owner and Engineer.

B. *Cash Allowances*: Contractor agrees that:

1. the cash allowances include the cost to Contractor (less any applicable trade discounts) of materials and equipment required by the allowances to be delivered at the Site, and all applicable taxes; and

2. Contractor's costs for unloading and handling on the Site, labor, installation, overhead, profit, and other expenses contemplated for the cash allowances have been included in the Contract Price and not in the allowances, and no demand for additional payment on account of any of the foregoing will be valid.

C. *Contingency Allowance*: Contractor agrees that a contingency allowance, if any, is for the sole use of Owner to cover unanticipated costs.

D. Prior to final payment, an appropriate Change Order will be issued as recommended by Engineer to reflect actual amounts due Contractor on account of Work covered by allowances, and the Contract Price shall be correspondingly adjusted.

13.3 *Unit Price Work*

A. Where the Contract Documents provide that all or part of the Work is to be Unit Price Work, initially the Contract Price will be deemed to include for all Unit Price Work an amount equal to the sum of the unit price for each separately identified item of Unit Price Work times the estimated quantity of each item as indicated in the Agreement.

Copyright © 2013 National Society of Professional Engineers, American Council of Engineering Companies, and American Society of Civil Engineers. All rights reserved.

B. The estimated quantities of items of Unit Price Work are not guaranteed and are solely for the purpose of comparison of Bids and determining an initial Contract Price. Payments to Contractor for Unit Price Work will be based on actual quantities.

C. Each unit price will be deemed to include an amount considered by Contractor to be adequate to cover Contractor's overhead and profit for each separately identified item.

D. Engineer will determine the actual quantities and classifications of Unit Price Work performed by Contractor. Engineer will review with Contractor the Engineer's preliminary determinations on such matters before rendering a written decision thereon (by recommendation of an Application for Payment or otherwise). Engineer's written decision thereon will be final and binding (except as modified by Engineer to reflect changed factual conditions or more accurate data) upon Owner and Contractor, subject to the provisions of the following paragraph.

E. Within 30 days of Engineer's written decision under the preceding paragraph, Contractor may submit a Change Proposal, or Owner may file a Claim, seeking an adjustment in the Contract Price if:

1. the quantity of any item of Unit Price Work performed by Contractor differs materially and significantly from the estimated quantity of such item indicated in the Agreement;

2. there is no corresponding adjustment with respect to any other item of Work; and

3. Contractor believes that it is entitled to an increase in Contract Price as a result of having incurred additional expense or Owner believes that Owner is entitled to a decrease in Contract Price, and the parties are unable to agree as to the amount of any such increase or decrease.

ARTICLE 14 – TESTS AND INSPECTIONS; CORRECTION, REMOVAL OR ACCEPTANCE OF DEFECTIVE WORK

14.1 *Access to Work*

A. Owner, Engineer, their consultants and other representatives and personnel of Owner, independent testing laboratories, and authorities having jurisdiction will have access to the Site and the Work at reasonable times for their observation, inspection, and testing. Contractor shall provide them proper and safe conditions for such access and advise them of Contractor's safety procedures and programs so that they may comply therewith as applicable.

14.2 *Tests, Inspections, and Approvals*

A. Contractor shall give Engineer timely notice of readiness of the Work (or specific parts thereof) for all required inspections and tests, and shall cooperate with inspection and testing personnel to facilitate required inspections and tests.

B. Owner shall retain and pay for the services of an independent inspector, testing laboratory, or other qualified individual or entity to perform all inspections and tests expressly required by the Contract Documents to be furnished and paid for by Owner, except that costs

Copyright © 2013 National Society of Professional Engineers, American Council of Engineering Companies, and American Society of Civil Engineers. All rights reserved.

incurred in connection with tests or inspections of covered Work shall be governed by the provisions of Paragraph 14.05.

C. If Laws or Regulations of any public body having jurisdiction require any Work (or part thereof) specifically to be inspected, tested, or approved by an employee or other representative of such public body, Contractor shall assume full responsibility for arranging and obtaining such inspections, tests, or approvals, pay all costs in connection therewith, and furnish Engineer the required certificates of inspection or approval.

D. Contractor shall be responsible for arranging, obtaining, and paying for all inspections and tests required:

1. by the Contract Documents, unless the Contract Documents expressly allocate responsibility for a specific inspection or test to Owner;

2. to attain Owner's and Engineer's acceptance of materials or equipment to be incorporated in the Work;

3. by manufacturers of equipment furnished under the Contract Documents;

4. for testing, adjusting, and balancing of mechanical, electrical, and other equipment to be incorporated into the Work; and

5. for acceptance of materials, mix designs, or equipment submitted for approval prior to Contractor's purchase thereof for incorporation in the Work.

Such inspections and tests shall be performed by independent inspectors, testing laboratories, or other qualified individuals or entities acceptable to Owner and Engineer.

E. If the Contract Documents require the Work (or part thereof) to be approved by Owner, Engineer, or another designated individual or entity, then Contractor shall assume full responsibility for arranging and obtaining such approvals.

F. If any Work (or the work of others) that is to be inspected, tested, or approved is covered by Contractor without written concurrence of Engineer, Contractor shall, if requested by Engineer, uncover such Work for observation. Such uncovering shall be at Contractor's expense unless Contractor had given Engineer timely notice of Contractor's intention to cover the same and Engineer had not acted with reasonable promptness in response to such notice.

14.3 *Defective Work*

A. *Contractor's Obligation*: It is Contractor's obligation to assure that the Work is not defective.

B. *Engineer's Authority*: Engineer has the authority to determine whether Work is defective, and to reject defective Work.

C. *Notice of Defects*: Prompt notice of all defective Work of which Owner or Engineer has actual knowledge will be given to Contractor.

D. *Correction, or Removal and Replacement*: Promptly after receipt of written notice of defective Work, Contractor shall correct all such defective Work, whether or not fabricated,

Copyright © 2013 National Society of Professional Engineers, American Council of Engineering Companies, and American Society of Civil Engineers. All rights reserved.

installed, or completed, or, if Engineer has rejected the defective Work, remove it from the Project and replace it with Work that is not defective.

E. *Preservation of Warranties*: When correcting defective Work, Contractor shall take no action that would void or otherwise impair Owner's special warranty and guarantee, if any, on said Work.

F. *Costs and Damages*: In addition to its correction, removal, and replacement obligations with respect to defective Work, Contractor shall pay all claims, costs, losses, and damages arising out of or relating to defective Work, including but not limited to the cost of the inspection, testing, correction, removal, replacement, or reconstruction of such defective Work, fines levied against Owner by governmental authorities because the Work is defective, and the costs of repair or replacement of work of others resulting from defective Work. Prior to final payment, if Owner and Contractor are unable to agree as to the measure of such claims, costs, losses, and damages resulting from defective Work, then Owner may impose a reasonable set-off against payments due under Article 15.

14.4 *Acceptance of Defective Work*

A. If, instead of requiring correction or removal and replacement of defective Work, Owner prefers to accept it, Owner may do so (subject, if such acceptance occurs prior to final payment, to Engineer's confirmation that such acceptance is in general accord with the design intent and applicable engineering principles, and will not endanger public safety). Contractor shall pay all claims, costs, losses, and damages attributable to Owner's evaluation of and determination to accept such defective Work (such costs to be approved by Engineer as to reasonableness), and for the diminished value of the Work to the extent not otherwise paid by Contractor. If any such acceptance occurs prior to final payment, the necessary revisions in the Contract Documents with respect to the Work shall be incorporated in a Change Order. If the parties are unable to agree as to the decrease in the Contract Price, reflecting the diminished value of Work so accepted, then Owner may impose a reasonable set-off against payments due under Article 15. If the acceptance of defective Work occurs after final payment, Contractor shall pay an appropriate amount to Owner.

14.5 *Uncovering Work*

A. Engineer has the authority to require additional inspection or testing of the Work, whether or not the Work is fabricated, installed, or completed.

B. If any Work is covered contrary to the written request of Engineer, then Contractor shall, if requested by Engineer, uncover such Work for Engineer's observation, and then replace the covering, all at Contractor's expense.

C. If Engineer considers it necessary or advisable that covered Work be observed by Engineer or inspected or tested by others, then Contractor, at Engineer's request, shall uncover, expose, or otherwise make available for observation, inspection, or testing as Engineer may require, that portion of the Work in question, and provide all necessary labor, material, and equipment.

Copyright © 2013 National Society of Professional Engineers, American Council of Engineering Companies, and American Society of Civil Engineers. All rights reserved.

1. If it is found that the uncovered Work is defective, Contractor shall be responsible for all claims, costs, losses, and damages arising out of or relating to such uncovering, exposure, observation, inspection, and testing, and of satisfactory replacement or reconstruction (including but not limited to all costs of repair or replacement of work of others); and pending Contractor's full discharge of this responsibility the Owner shall be entitled to impose a reasonable set-off against payments due under Article 15.

2. If the uncovered Work is not found to be defective, Contractor shall be allowed an increase in the Contract Price or an extension of the Contract Times, or both, directly attributable to such uncovering, exposure, observation, inspection, testing, replacement, and reconstruction. If the parties are unable to agree as to the amount or extent thereof, then Contractor may submit a Change Proposal within 30 days of the determination that the Work is not defective.

14.6 *Owner May Stop the Work*

A. If the Work is defective, or Contractor fails to supply sufficient skilled workers or suitable materials or equipment, or fails to perform the Work in such a way that the completed Work will conform to the Contract Documents, then Owner may order Contractor to stop the Work, or any portion thereof, until the cause for such order has been eliminated; however, this right of Owner to stop the Work shall not give rise to any duty on the part of Owner to exercise this right for the benefit of Contractor, any Subcontractor, any Supplier, any other individual or entity, or any surety for, or employee or agent of any of them.

14.7 *Owner May Correct Defective Work*

A. If Contractor fails within a reasonable time after written notice from Engineer to correct defective Work, or to remove and replace rejected Work as required by Engineer, or if Contractor fails to perform the Work in accordance with the Contract Documents, or if Contractor fails to comply with any other provision of the Contract Documents, then Owner may, after seven days written notice to Contractor, correct or remedy any such deficiency.

B. In exercising the rights and remedies under this Paragraph 14.07, Owner shall proceed expeditiously. In connection with such corrective or remedial action, Owner may exclude Contractor from all or part of the Site, take possession of all or part of the Work and suspend Contractor's services related thereto, and incorporate in the Work all materials and equipment stored at the Site or for which Owner has paid Contractor but which are stored elsewhere. Contractor shall allow Owner, Owner's representatives, agents and employees, Owner's other contractors, and Engineer and Engineer's consultants access to the Site to enable Owner to exercise the rights and remedies under this paragraph.

C. All claims, costs, losses, and damages incurred or sustained by Owner in exercising the rights and remedies under this Paragraph 14.07 will be charged against Contractor as set-offs against payments due under Article 15. Such claims, costs, losses and damages will include but not be limited to all costs of repair, or replacement of work of others destroyed or damaged by correction, removal, or replacement of Contractor's defective Work.

Copyright © 2013 National Society of Professional Engineers, American Council of Engineering Companies, and American Society of Civil Engineers. All rights reserved.

D. Contractor shall not be allowed an extension of the Contract Times because of any delay in the performance of the Work attributable to the exercise by Owner of Owner's rights and remedies under this Paragraph 14.07.

ARTICLE 15 – PAYMENTS TO CONTRACTOR; SET-OFFS; COMPLETION; CORRECTION PERIOD

15.1 *Progress Payments*

A. *Basis for Progress Payments*: The Schedule of Values established as provided in Article 2 will serve as the basis for progress payments and will be incorporated into a form of Application for Payment acceptable to Engineer. Progress payments on account of Unit Price Work will be based on the number of units completed during the pay period, as determined under the provisions of Paragraph 13.03. Progress payments for cost-based Work will be based on Cost of the Work completed by Contractor during the pay period.

B. *Applications for Payments*:

1. At least 20 days before the date established in the Agreement for each progress payment (but not more often than once a month), Contractor shall submit to Engineer for review an Application for Payment filled out and signed by Contractor covering the Work completed as of the date of the Application and accompanied by such supporting documentation as is required by the Contract Documents. If payment is requested on the basis of materials and equipment not incorporated in the Work but delivered and suitably stored at the Site or at another location agreed to in writing, the Application for Payment shall also be accompanied by a bill of sale, invoice, or other documentation warranting that Owner has received the materials and equipment free and clear of all Liens, and evidence that the materials and equipment are covered by appropriate property insurance, a warehouse bond, or other arrangements to protect Owner's interest therein, all of which must be satisfactory to Owner.

2. Beginning with the second Application for Payment, each Application shall include an affidavit of Contractor stating that all previous progress payments received on account of the Work have been applied on account to discharge Contractor's legitimate obligations associated with prior Applications for Payment.

3. The amount of retainage with respect to progress payments will be as stipulated in the Agreement.

C. *Review of Applications*:

1. Engineer will, within 10 days after receipt of each Application for Payment, including each resubmittal, either indicate in writing a recommendation of payment and present the Application to Owner, or return the Application to Contractor indicating in writing Engineer's reasons for refusing to recommend payment. In the latter case, Contractor may make the necessary corrections and resubmit the Application.

2. Engineer's recommendation of any payment requested in an Application for Payment will constitute a representation by Engineer to Owner, based on Engineer's observations of the executed Work as an experienced and qualified design

Copyright © 2013 National Society of Professional Engineers, American Council of Engineering Companies, and American Society of Civil Engineers. All rights reserved.

professional, and on Engineer's review of the Application for Payment and the accompanying data and schedules, that to the best of Engineer's knowledge, information and belief:

a. the Work has progressed to the point indicated;

b. the quality of the Work is generally in accordance with the Contract Documents (subject to an evaluation of the Work as a functioning whole prior to or upon Substantial Completion, the results of any subsequent tests called for in the Contract Documents, a final determination of quantities and classifications for Unit Price Work under Paragraph 13.03, and any other qualifications stated in the recommendation); and

c. the conditions precedent to Contractor's being entitled to such payment appear to have been fulfilled in so far as it is Engineer's responsibility to observe the Work.

3. By recommending any such payment Engineer will not thereby be deemed to have represented that:

a. inspections made to check the quality or the quantity of the Work as it has been performed have been exhaustive, extended to every aspect of the Work in progress, or involved detailed inspections of the Work beyond the responsibilities specifically assigned to Engineer in the Contract; or

b. there may not be other matters or issues between the parties that might entitle Contractor to be paid additionally by Owner or entitle Owner to withhold payment to Contractor.

4. Neither Engineer's review of Contractor's Work for the purposes of recommending payments nor Engineer's recommendation of any payment, including final payment, will impose responsibility on Engineer:

a. to supervise, direct, or control the Work, or

b. for the means, methods, techniques, sequences, or procedures of construction, or the safety precautions and programs incident thereto, or

c. for Contractor's failure to comply with Laws and Regulations applicable to Contractor's performance of the Work, or

d. to make any examination to ascertain how or for what purposes Contractor has used the money paid on account of the Contract Price, or

e. to determine that title to any of the Work, materials, or equipment has passed to Owner free and clear of any Liens.

5. Engineer may refuse to recommend the whole or any part of any payment if, in Engineer's opinion, it would be incorrect to make the representations to Owner stated in Paragraph 15.01.C.2.

Copyright © 2013 National Society of Professional Engineers, American Council of Engineering Companies, and American Society of Civil Engineers. All rights reserved.

6. Engineer will recommend reductions in payment (set-offs) necessary in Engineer's opinion to protect Owner from loss because:

   a. the Work is defective, requiring correction or replacement;

   b. the Contract Price has been reduced by Change Orders;

   c. Owner has been required to correct defective Work in accordance with Paragraph 14.07, or has accepted defective Work pursuant to Paragraph 14.04;

   d. Owner has been required to remove or remediate a Hazardous Environmental Condition for which Contractor is responsible; or

   e. Engineer has actual knowledge of the occurrence of any of the events that would constitute a default by Contractor and therefore justify termination for cause under the Contract Documents.

D. *Payment Becomes Due*:

1. Ten days after presentation of the Application for Payment to Owner with Engineer's recommendation, the amount recommended (subject to any Owner set-offs) will become due, and when due will be paid by Owner to Contractor.

E. *Reductions in Payment by Owner*:

1. In addition to any reductions in payment (set-offs) recommended by Engineer, Owner is entitled to impose a set-off against payment based on any of the following:

   a. claims have been made against Owner on account of Contractor's conduct in the performance or furnishing of the Work, or Owner has incurred costs, losses, or damages on account of Contractor's conduct in the performance or furnishing of the Work, including but not limited to claims, costs, losses, or damages from workplace injuries, adjacent property damage, non-compliance with Laws and Regulations, and patent infringement;

   b. Contractor has failed to take reasonable and customary measures to avoid damage, delay, disruption, and interference with other work at or adjacent to the Site;

   c. Contractor has failed to provide and maintain required bonds or insurance;

   d. Owner has been required to remove or remediate a Hazardous Environmental Condition for which Contractor is responsible;

   e. Owner has incurred extra charges or engineering costs related to submittal reviews, evaluations of proposed substitutes, tests and inspections, or return visits to manufacturing or assembly facilities;

   f. the Work is defective, requiring correction or replacement;

   g. Owner has been required to correct defective Work in accordance with Paragraph 14.07, or has accepted defective Work pursuant to Paragraph 14.04;

   h. the Contract Price has been reduced by Change Orders;

Copyright © 2013 National Society of Professional Engineers, American Council of Engineering Companies, and American Society of Civil Engineers. All rights reserved.

i. an event that would constitute a default by Contractor and therefore justify a termination for cause has occurred;

j. liquidated damages have accrued as a result of Contractor's failure to achieve Milestones, Substantial Completion, or final completion of the Work;

k. Liens have been filed in connection with the Work, except where Contractor has delivered a specific bond satisfactory to Owner to secure the satisfaction and discharge of such Liens;

l. there are other items entitling Owner to a set off against the amount recommended.

2. If Owner imposes any set-off against payment, whether based on its own knowledge or on the written recommendations of Engineer, Owner will give Contractor immediate written notice (with a copy to Engineer) stating the reasons for such action and the specific amount of the reduction, and promptly pay Contractor any amount remaining after deduction of the amount so withheld. Owner shall promptly pay Contractor the amount so withheld, or any adjustment thereto agreed to by Owner and Contractor, if Contractor remedies the reasons for such action. The reduction imposed shall be binding on Contractor unless it duly submits a Change Proposal contesting the reduction.

3. Upon a subsequent determination that Owner's refusal of payment was not justified, the amount wrongfully withheld shall be treated as an amount due as determined by Paragraph 15.01.C.1 and subject to interest as provided in the Agreement.

15.2 *Contractor's Warranty of Title*

A. Contractor warrants and guarantees that title to all Work, materials, and equipment furnished under the Contract will pass to Owner free and clear of (1) all Liens and other title defects, and (2) all patent, licensing, copyright, or royalty obligations, no later than seven days after the time of payment by Owner.

15.3 *Substantial Completion*

A. When Contractor considers the entire Work ready for its intended use Contractor shall notify Owner and Engineer in writing that the entire Work is substantially complete and request that Engineer issue a certificate of Substantial Completion. Contractor shall at the same time submit to Owner and Engineer an initial draft of punch list items to be completed or corrected before final payment.

B. Promptly after Contractor's notification, Owner, Contractor, and Engineer shall make an inspection of the Work to determine the status of completion. If Engineer does not consider the Work substantially complete, Engineer will notify Contractor in writing giving the reasons therefor.

C. If Engineer considers the Work substantially complete, Engineer will deliver to Owner a preliminary certificate of Substantial Completion which shall fix the date of Substantial Completion. Engineer shall attach to the certificate a punch list of items to be completed or

Copyright © 2013 National Society of Professional Engineers, American Council of Engineering Companies, and American Society of Civil Engineers. All rights reserved.

corrected before final payment. Owner shall have seven days after receipt of the preliminary certificate during which to make written objection to Engineer as to any provisions of the certificate or attached punch list. If, after considering the objections to the provisions of the preliminary certificate, Engineer concludes that the Work is not substantially complete, Engineer will, within 14 days after submission of the preliminary certificate to Owner, notify Contractor in writing that the Work is not substantially complete, stating the reasons therefor. If Owner does not object to the provisions of the certificate, or if despite consideration of Owner's objections Engineer concludes that the Work is substantially complete, then Engineer will, within said 14 days, execute and deliver to Owner and Contractor a final certificate of Substantial Completion (with a revised punch list of items to be completed or corrected) reflecting such changes from the preliminary certificate as Engineer believes justified after consideration of any objections from Owner.

D. At the time of receipt of the preliminary certificate of Substantial Completion, Owner and Contractor will confer regarding Owner's use or occupancy of the Work following Substantial Completion, review the builder's risk insurance policy with respect to the end of the builder's risk coverage, and confirm the transition to coverage of the Work under a permanent property insurance policy held by Owner. Unless Owner and Contractor agree otherwise in writing, Owner shall bear responsibility for security, operation, protection of the Work, property insurance, maintenance, heat, and utilities upon Owner's use or occupancy of the Work.

E. After Substantial Completion the Contractor shall promptly begin work on the punch list of items to be completed or corrected prior to final payment. In appropriate cases Contractor may submit monthly Applications for Payment for completed punch list items, following the progress payment procedures set forth above.

F. Owner shall have the right to exclude Contractor from the Site after the date of Substantial Completion subject to allowing Contractor reasonable access to remove its property and complete or correct items on the punch list.

15.4 *Partial Use or Occupancy*

A. Prior to Substantial Completion of all the Work, Owner may use or occupy any substantially completed part of the Work which has specifically been identified in the Contract Documents, or which Owner, Engineer, and Contractor agree constitutes a separately functioning and usable part of the Work that can be used by Owner for its intended purpose without significant interference with Contractor's performance of the remainder of the Work, subject to the following conditions:

1. At any time Owner may request in writing that Contractor permit Owner to use or occupy any such part of the Work that Owner believes to be substantially complete. If and when Contractor agrees that such part of the Work is substantially complete, Contractor, Owner, and Engineer will follow the procedures of Paragraph 15.03.A through E for that part of the Work.

Copyright © 2013 National Society of Professional Engineers, American Council of Engineering Companies, and American Society of Civil Engineers. All rights reserved.

2. At any time Contractor may notify Owner and Engineer in writing that Contractor considers any such part of the Work substantially complete and request Engineer to issue a certificate of Substantial Completion for that part of the Work.

3. Within a reasonable time after either such request, Owner, Contractor, and Engineer shall make an inspection of that part of the Work to determine its status of completion. If Engineer does not consider that part of the Work to be substantially complete, Engineer will notify Owner and Contractor in writing giving the reasons therefor. If Engineer considers that part of the Work to be substantially complete, the provisions of Paragraph 15.03 will apply with respect to certification of Substantial Completion of that part of the Work and the division of responsibility in respect thereof and access thereto.

4. No use or occupancy or separate operation of part of the Work may occur prior to compliance with the requirements of Paragraph 6.05 regarding builder's risk or other property insurance.

15.5 *Final Inspection*

A. Upon written notice from Contractor that the entire Work or an agreed portion thereof is complete, Engineer will promptly make a final inspection with Owner and Contractor and will notify Contractor in writing of all particulars in which this inspection reveals that the Work, or agreed portion thereof, is incomplete or defective. Contractor shall immediately take such measures as are necessary to complete such Work or remedy such deficiencies.

15.6 *Final Payment*

A. *Application for Payment*:

1. After Contractor has, in the opinion of Engineer, satisfactorily completed all corrections identified during the final inspection and has delivered, in accordance with the Contract Documents, all maintenance and operating instructions, schedules, guarantees, bonds, certificates or other evidence of insurance, certificates of inspection, annotated record documents (as provided in Paragraph 7.11), and other documents, Contractor may make application for final payment.

2. The final Application for Payment shall be accompanied (except as previously delivered) by:

a. all documentation called for in the Contract Documents;

b. consent of the surety, if any, to final payment;

c. satisfactory evidence that all title issues have been resolved such that title to all Work, materials, and equipment has passed to Owner free and clear of any Liens or other title defects, or will so pass upon final payment.

d. a list of all disputes that Contractor believes are unsettled; and

e. complete and legally effective releases or waivers (satisfactory to Owner) of all Lien rights arising out of the Work, and of Liens filed in connection with the Work.

Copyright © 2013 National Society of Professional Engineers, American Council of Engineering Companies, and American Society of Civil Engineers. All rights reserved.

3. In lieu of the releases or waivers of Liens specified in Paragraph 15.06.A.2 and as approved by Owner, Contractor may furnish receipts or releases in full and an affidavit of Contractor that: (a) the releases and receipts include all labor, services, material, and equipment for which a Lien could be filed; and (b) all payrolls, material and equipment bills, and other indebtedness connected with the Work for which Owner might in any way be responsible, or which might in any way result in liens or other burdens on Owner's property, have been paid or otherwise satisfied. If any Subcontractor or Supplier fails to furnish such a release or receipt in full, Contractor may furnish a bond or other collateral satisfactory to Owner to indemnify Owner against any Lien, or Owner at its option may issue joint checks payable to Contractor and specified Subcontractors and Suppliers.

B. *Engineer's Review of Application and Acceptance*:

1. If, on the basis of Engineer's observation of the Work during construction and final inspection, and Engineer's review of the final Application for Payment and accompanying documentation as required by the Contract Documents, Engineer is satisfied that the Work has been completed and Contractor's other obligations under the Contract have been fulfilled, Engineer will, within ten days after receipt of the final Application for Payment, indicate in writing Engineer's recommendation of final payment and present the Application for Payment to Owner for payment. Such recommendation shall account for any set-offs against payment that are necessary in Engineer's opinion to protect Owner from loss for the reasons stated above with respect to progress payments. At the same time Engineer will also give written notice to Owner and Contractor that the Work is acceptable, subject to the provisions of Paragraph 15.07. Otherwise, Engineer will return the Application for Payment to Contractor, indicating in writing the reasons for refusing to recommend final payment, in which case Contractor shall make the necessary corrections and resubmit the Application for Payment.

C. *Completion of Work*: The Work is complete (subject to surviving obligations) when it is ready for final payment as established by the Engineer's written recommendation of final payment.

D. *Payment Becomes Due*: Thirty days after the presentation to Owner of the final Application for Payment and accompanying documentation, the amount recommended by Engineer (less any further sum Owner is entitled to set off against Engineer's recommendation, including but not limited to set-offs for liquidated damages and set-offs allowed under the provisions above with respect to progress payments) will become due and shall be paid by Owner to Contractor.

15.7 *Waiver of Claims*

A. The making of final payment will not constitute a waiver by Owner of claims or rights against Contractor. Owner expressly reserves claims and rights arising from unsettled Liens, from defective Work appearing after final inspection pursuant to Paragraph 15.05, from Contractor's failure to comply with the Contract Documents or the terms of any special

Copyright © 2013 National Society of Professional Engineers, American Council of Engineering Companies, and American Society of Civil Engineers. All rights reserved.

guarantees specified therein, from outstanding Claims by Owner, or from Contractor's continuing obligations under the Contract Documents.

B. The acceptance of final payment by Contractor will constitute a waiver by Contractor of all claims and rights against Owner other than those pending matters that have been duly submitted or appealed under the provisions of Article 17.

15.8 *Correction Period*

A. If within one year after the date of Substantial Completion (or such longer period of time as may be prescribed by the terms of any applicable special guarantee required by the Contract Documents, or by any specific provision of the Contract Documents), any Work is found to be defective, or if the repair of any damages to the Site, adjacent areas that Contractor has arranged to use through construction easements or otherwise, and other adjacent areas used by Contractor as permitted by Laws and Regulations, is found to be defective, then Contractor shall promptly, without cost to Owner and in accordance with Owner's written instructions:

1. correct the defective repairs to the Site or such other adjacent areas;
2. correct such defective Work;
3. if the defective Work has been rejected by Owner, remove it from the Project and replace it with Work that is not defective, and
4. satisfactorily correct or repair or remove and replace any damage to other Work, to the work of others, or to other land or areas resulting therefrom.

B. If Contractor does not promptly comply with the terms of Owner's written instructions, or in an emergency where delay would cause serious risk of loss or damage, Owner may have the defective Work corrected or repaired or may have the rejected Work removed and replaced. Contractor shall pay all claims, costs, losses, and damages (including but not limited to all fees and charges of engineers, architects, attorneys, and other professionals and all court or arbitration or other dispute resolution costs) arising out of or relating to such correction or repair or such removal and replacement (including but not limited to all costs of repair or replacement of work of others).

C. In special circumstances where a particular item of equipment is placed in continuous service before Substantial Completion of all the Work, the correction period for that item may start to run from an earlier date if so provided in the Specifications.

D. Where defective Work (and damage to other Work resulting therefrom) has been corrected or removed and replaced under this paragraph, the correction period hereunder with respect to such Work will be extended for an additional period of one year after such correction or removal and replacement has been satisfactorily completed.

E. Contractor's obligations under this paragraph are in addition to all other obligations and warranties. The provisions of this paragraph shall not be construed as a substitute for, or a waiver of, the provisions of any applicable statute of limitation or repose.

Copyright © 2013 National Society of Professional Engineers, American Council of Engineering Companies, and American Society of Civil Engineers. All rights reserved.

ARTICLE 16 – SUSPENSION OF WORK AND TERMINATION

16.1 *Owner May Suspend Work*

A. At any time and without cause, Owner may suspend the Work or any portion thereof for a period of not more than 90 consecutive days by written notice to Contractor and Engineer. Such notice will fix the date on which Work will be resumed. Contractor shall resume the Work on the date so fixed. Contractor shall be entitled to an adjustment in the Contract Price or an extension of the Contract Times, or both, directly attributable to any such suspension. Any Change Proposal seeking such adjustments shall be submitted no later than 30 days after the date fixed for resumption of Work.

16.2 *Owner May Terminate for Cause*

A. The occurrence of any one or more of the following events will constitute a default by Contractor and justify termination for cause:

1. Contractor's persistent failure to perform the Work in accordance with the Contract Documents (including, but not limited to, failure to supply sufficient skilled workers or suitable materials or equipment or failure to adhere to the Progress Schedule);

2. Failure of Contractor to perform or otherwise to comply with a material term of the Contract Documents;

3. Contractor's disregard of Laws or Regulations of any public body having jurisdiction; or

4. Contractor's repeated disregard of the authority of Owner or Engineer.

B. If one or more of the events identified in Paragraph 16.02.A occurs, then after giving Contractor (and any surety) ten days written notice that Owner is considering a declaration that Contractor is in default and termination of the contract, Owner may proceed to:

1. declare Contractor to be in default, and give Contractor (and any surety) notice that the Contract is terminated; and

2. enforce the rights available to Owner under any applicable performance bond.

C. Subject to the terms and operation of any applicable performance bond, if Owner has terminated the Contract for cause, Owner may exclude Contractor from the Site, take possession of the Work, incorporate in the Work all materials and equipment stored at the Site or for which Owner has paid Contractor but which are stored elsewhere, and complete the Work as Owner may deem expedient.

D. Owner may not proceed with termination of the Contract under Paragraph 16.02.B if Contractor within seven days of receipt of notice of intent to terminate begins to correct its failure to perform and proceeds diligently to cure such failure.

E. If Owner proceeds as provided in Paragraph 16.02.B, Contractor shall not be entitled to receive any further payment until the Work is completed. If the unpaid balance of the Contract Price exceeds the cost to complete the Work, including all related claims, costs, losses, and damages (including but not limited to all fees and charges of engineers, architects, attorneys, and other professionals) sustained by Owner, such excess will be paid

Copyright © 2013 National Society of Professional Engineers, American Council of Engineering Companies, and American Society of Civil Engineers. All rights reserved.

to Contractor. If the cost to complete the Work including such related claims, costs, losses, and damages exceeds such unpaid balance, Contractor shall pay the difference to Owner. Such claims, costs, losses, and damages incurred by Owner will be reviewed by Engineer as to their reasonableness and, when so approved by Engineer, incorporated in a Change Order. When exercising any rights or remedies under this paragraph, Owner shall not be required to obtain the lowest price for the Work performed.

F. Where Contractor's services have been so terminated by Owner, the termination will not affect any rights or remedies of Owner against Contractor then existing or which may thereafter accrue, or any rights or remedies of Owner against Contractor or any surety under any payment bond or performance bond. Any retention or payment of money due Contractor by Owner will not release Contractor from liability.

G. If and to the extent that Contractor has provided a performance bond under the provisions of Paragraph 6.01.A, the provisions of that bond shall govern over any inconsistent provisions of Paragraphs 16.02.B and 16.02.D.

16.3 *Owner May Terminate For Convenience*

A. Upon seven days written notice to Contractor and Engineer, Owner may, without cause and without prejudice to any other right or remedy of Owner, terminate the Contract. In such case, Contractor shall be paid for (without duplication of any items):

1. completed and acceptable Work executed in accordance with the Contract Documents prior to the effective date of termination, including fair and reasonable sums for overhead and profit on such Work;

2. expenses sustained prior to the effective date of termination in performing services and furnishing labor, materials, or equipment as required by the Contract Documents in connection with uncompleted Work, plus fair and reasonable sums for overhead and profit on such expenses; and

3. other reasonable expenses directly attributable to termination, including costs incurred to prepare a termination for convenience cost proposal.

B. Contractor shall not be paid on account of loss of anticipated overhead, profits, or revenue, or other economic loss arising out of or resulting from such termination.

16.4 *Contractor May Stop Work or Terminate*

A. If, through no act or fault of Contractor, (1) the Work is suspended for more than 90 consecutive days by Owner or under an order of court or other public authority, or (2) Engineer fails to act on any Application for Payment within 30 days after it is submitted, or (2) Owner fails for 30 days to pay Contractor any sum finally determined to be due, then Contractor may, upon seven days written notice to Owner and Engineer, and provided Owner or Engineer do not remedy such suspension or failure within that time, terminate the contract and recover from Owner payment on the same terms as provided in Paragraph 16.03.

Copyright © 2013 National Society of Professional Engineers, American Council of Engineering Companies, and American Society of Civil Engineers. All rights reserved.

B. In lieu of terminating the Contract and without prejudice to any other right or remedy, if Engineer has failed to act on an Application for Payment within 30 days after it is submitted, or Owner has failed for 30 days to pay Contractor any sum finally determined to be due, Contractor may, seven days after written notice to Owner and Engineer, stop the Work until payment is made of all such amounts due Contractor, including interest thereon. The provisions of this paragraph are not intended to preclude Contractor from submitting a Change Proposal for an adjustment in Contract Price or Contract Times or otherwise for expenses or damage directly attributable to Contractor's stopping the Work as permitted by this paragraph.

ARTICLE 17 – FINAL RESOLUTION OF DISPUTES

17.1 *Methods and Procedures*

A. *Disputes Subject to Final Resolution*: The following disputed matters are subject to final resolution under the provisions of this Article:

1. A timely appeal of an approval in part and denial in part of a Claim, or of a denial in full; and
2. Disputes between Owner and Contractor concerning the Work or obligations under the Contract Documents, and arising after final payment has been made.

B. *Final Resolution of Disputes*: For any dispute subject to resolution under this Article, Owner or Contractor may:

1. elect in writing to invoke the dispute resolution process provided for in the Supplementary Conditions; or
2. agree with the other party to submit the dispute to another dispute resolution process; or
3. if no dispute resolution process is provided for in the Supplementary Conditions or mutually agreed to, give written notice to the other party of the intent to submit the dispute to a court of competent jurisdiction.

ARTICLE 18 – MISCELLANEOUS

18.1 *Giving Notice*

A. Whenever any provision of the Contract Documents requires the giving of written notice, it will be deemed to have been validly given if:

1. delivered in person, by a commercial courier service or otherwise, to the individual or to a member of the firm or to an officer of the corporation for which it is intended; or
2. delivered at or sent by registered or certified mail, postage prepaid, to the last business address known to the sender of the notice.

Copyright © 2013 National Society of Professional Engineers, American Council of Engineering Companies, and American Society of Civil Engineers. All rights reserved.

18.2 *Computation of Times*

A. When any period of time is referred to in the Contract by days, it will be computed to exclude the first and include the last day of such period. If the last day of any such period falls on a Saturday or Sunday or on a day made a legal holiday by the law of the applicable jurisdiction, such day will be omitted from the computation.

18.3 *Cumulative Remedies*

A. The duties and obligations imposed by these General Conditions and the rights and remedies available hereunder to the parties hereto are in addition to, and are not to be construed in any way as a limitation of, any rights and remedies available to any or all of them which are otherwise imposed or available by Laws or Regulations, by special warranty or guarantee, or by other provisions of the Contract. The provisions of this paragraph will be as effective as if repeated specifically in the Contract Documents in connection with each particular duty, obligation, right, and remedy to which they apply.

18.4 *Limitation of Damages*

A. With respect to any and all Change Proposals, Claims, disputes subject to final resolution, and other matters at issue, neither Owner nor Engineer, nor any of their officers, directors, members, partners, employees, agents, consultants, or subcontractors, shall be liable to Contractor for any claims, costs, losses, or damages sustained by Contractor on or in connection with any other project or anticipated project.

18.5 *No Waiver*

A. A party's non-enforcement of any provision shall not constitute a waiver of that provision, nor shall it affect the enforceability of that provision or of the remainder of this Contract.

18.6 *Survival of Obligations*

A. All representations, indemnifications, warranties, and guarantees made in, required by, or given in accordance with the Contract, as well as all continuing obligations indicated in the Contract, will survive final payment, completion, and acceptance of the Work or termination or completion of the Contract or termination of the services of Contractor.

18.7 *Controlling Law*

A. This Contract is to be governed by the law of the state in which the Project is located.

18.8 *Headings*

A. Article and paragraph headings are inserted for convenience only and do not constitute parts of these General Conditions.

Copyright © 2013 National Society of Professional Engineers, American Council of Engineering Companies, and American Society of Civil Engineers. All rights reserved.

DOCUMENT 00 73 00

SUPPLEMENTARY CONDITIONS

These Supplementary Conditions amend or supplement the Standard General Conditions of the Construction Contract, EJCDC® C-700 (2013 Edition). All provisions that are not so amended or supplemented remain in full force and effect.

The terms used in these Supplementary Conditions have the meanings stated in the General Conditions. Additional terms used in these Supplementary Conditions have the meanings stated below, which are applicable to both the singular and plural thereof.

The address system used in these Supplementary Conditions is the same as the address system used in the General Conditions, with the prefix "SC" added thereto.

ARTICLE 1 – DEFINITIONS AND TERMINOLOGY

1.01 *Defined Terms.*

Add the following term after number 48.

49. Written Notice – Paper or electronic communication.

ARTICLE 2 – PRELIMINARY MATTERS

2.1 Delivery of Bonds and Evidence of Insurance

A. Paragraph 2.01.B of the General Conditions requires that Contractor furnish certificates of insurance. Paragraph 6.02.C states that upon request by Owner or other named or additional insureds, Contractor must provide evidence of insurance such as copies of required policies and endorsements, and documentation of applicable self-insured retentions and deductibles. Parallel provisions apply to Owner and the insurance that Owner is required to provide. Rather than relying on this two-step process (delivery of certificates of insurance at the outset; subsequent requests for additional evidence of insurance), some contract drafters may elect to require from the outset that copies of the insurance policies, rather than certificates of insurance, be delivered to the other party. If exchange of copies of insurance policies is required, the following should be used:

SC-2.01 Delete Paragraphs 2.01 B. and C. in their entirety and insert the following in their place:

B. Evidence of Contractor's Insurance: When Contractor delivers the executed counterparts of the Agreement to Owner, Contractor shall also deliver to Owner copies of the policies of insurance (including all endorsements, and identification of applicable self-insured retentions and deductibles) required to be provided by Contractor in Article 6. Contractor may block out (redact) any confidential premium or pricing information contained in any policy or endorsement furnished under this provision.

C. Evidence of Owner's Insurance: After receipt from Contractor of the executed counterparts of the Agreement and all required bonds and insurance documentation, Owner shall promptly deliver to Contractor copies of the policies of insurance to be provided by Owner under Article 6 (if any). Owner may block

out (redact) any confidential premium or pricing information contained in any policy or endorsement furnished under this provision.

2.2 Copies of Documents

SC-2.02.A. Amend the first sentence of Paragraph 2.02.A. to read as follows:

Owner shall furnish to Contractor an electronic portable document format (PDF) copy of the Contract Documents (including one fully executed counterpart of the Agreement).

ARTICLE 3 – DOCUMENTS: INTENT, REQUIREMENTS, REUSE

SC-3.03 Reporting and Resolving Discrepancies:

SC-3.03 Add the following new paragraphs after Paragraph 3.03.B.1:

2. The following reports of explorations and tests of subsurface conditions at or adjacent to the Site are known to Owner:

    1. No Known Reports

Add the following new section following Section 3.05:

SC-3.06 Order of Precedence

A. The order of the Technical Specifications as listed in the Document 00 01 10 Table of Contents shall be deemed the order of precedence of such documents.

ARTICLE 4 –COMMENCEMENT AND PROGRESS OF THE WORK

4.3 Reference Points

SC- 4.03 Add the following new paragraph after 4.03.A:

B. Construction Staking shall be the responsibility of the Contractor.

ARTICLE 5 – AVAILABILITY OF LANDS; SUBSURFACE AND PHYSICAL CONDITIONS; HAZARDOUS ENVIRONMENTAL CONDITIONS

SC-5.03 Subsurface and Physical Conditions

SC 5.03 Delete Paragraphs 5.03.A and 5.03.B in their entirety and insert the following:

A. No reports of explorations or tests of subsurface conditions at or adjacent to the Site, or drawings of physical conditions relating to existing surface or subsurface structures at the Site, are known to Owner.

5.6 Hazardous Environmental Conditions

SC 5.06 Delete Paragraphs 5.06.A and 5.06.B in their entirety and insert the following:

A. No reports or drawings related to Hazardous Environmental Conditions at the Site are known to Owner.

B. Not Used.

ARTICLE 6 – BONDS AND INSURANCE

SC-6.01 Performance, Payment, and Other Bonds

SC 6.01 Add the following new paragraph immediately after Paragraph 6.01.F:

G. Warranty Bond: Contractor shall furnish a warranty bond in an amount at least equal to the Contract Price, as security that Contractor will meet the contractual correction period obligations during a specified period of time after construction has been completed. This bond shall remain in effect until one (1) year after the date when final payment becomes due or until completion of the correction period specified in Paragraph 15.08, whichever is later, except as provided otherwise by Laws or Regulations, the Supplementary Conditions, or other specific provisions of the Contract.

SC-6.03 Contractor's Insurance

SC 6.03 Amend Paragraph 6.03.G to read as follows:

G: Additional insureds: The Contractor's commercial general liability, automobile liability, umbrella or excess, and pollution liability policies shall include and list as additional insureds the Owner and any individuals or entities identified in the Supplementary Conditions; include coverage for the respective officers, directors, members, partners, employees, agents, consultants, and subcontractors of each and any of all such additional insureds; and the insurance afforded to these additional insureds shall provide primary coverage for all claims covered thereby (including as applicable those arising from both ongoing and completed operations) on a non-contributory basis. Contractor shall obtain all necessary endorsements to support these requirements.

SC 6.03 Add the following new paragraph immediately after Paragraph 6.03.J:

K. The limits of liability for the insurance required by Paragraph 6.03 of the General Conditions shall provide coverage for not less than the following amounts or greater where required by Laws and Regulations:

1. Workers' Compensation, and related coverages under Paragraphs 6.03.A.1 and A.2 of the General Conditions:

State:		Statutory
Federal, if applicable (e.g., Longshoreman's):		Statutory
Employer's Liability:		
Bodily injury/disease aggregate	$	1,000,000

2. Contractor's Commercial General Liability under Paragraphs 6.03.B and 6.03.C of the General Conditions:

Each Occurrence (Bodily Injury and Property Damage)	$ 1,000,000
Personal and Advertising Injury	$ 1,000,000
General Aggregate	$ 2,000,000
Products - Completed Operations Aggregate	$ 1,000,000

3. Automobile Liability under Paragraph 6.03.D. of the General Conditions:

Combined Single Limit of	$ 1,000,000
[or]	
Bodily Injury:	
Each person	$ 500,000
Each accident	$ 1,000,000
Property Damage:	
Each accident	$ 1,000,000

4. Excess or Umbrella Liability:

Per Occurrence	$ 2,000,000
General Aggregate	$ 2,000,000

5. Not Used.
6. Additional Insureds: In addition to Owner, include as additional insureds the following: none

SC 6.05 Add the following new paragraph immediately after Paragraph 6.05.F:

G. *Builder's Risk Insurance Requirement:* Builder's Risk insurance shall only apply to those Projects involving construction of or modification to an Owner-owned building or as otherwise required by the Owner and expressly stated in the Agreement.

ARTICLE 7 – CONTRACTOR'S RESPONSIBILITIES

SC-7.02 Labor; Working Hours

SC-7.02.A Amend Paragraph 7.02.A to read as follows:

Unless otherwise specified in the Contract Documents, Contractor shall provide and assume full responsibility for all services, materials, equipment, labor, transportation, construction equipment and machinery, tools, appliances, fuel, power, light, heat, telephone, water, sanitary facilities, temporary facilities, and all other facilities and incidentals necessary for the performance, testing, construction staking, start up, and

completion of the Work, whether or not such items are specifically called for in the Contract Documents.

SC-7.02.B Add the following new paragraph immediately after Paragraph 7.02.B:

Contractor shall be responsible for the cost of any overtime pay or other expense incurred by the Owner for Engineer's services (including those of the Resident Project Representative, if any), Owner's representative, and construction observation services, occasioned by the performance of Work on Saturday, Sunday, any legal holiday, or as overtime on any regular work day. If Contractor is responsible but does not pay, or if the parties are unable to agree as to the amount owed, then Owner may impose a reasonable set-off against payments due under Article 15.

SC-7.02.C Add the following new subparagraph immediately after Paragraph 7.02.C:

1. For purposes of administering the foregoing requirement, additional overtime costs are defined as the difference between regular hourly rates and overtime hourly rates.

SC-7.06 Concerning Subcontractors, Supplier, and Others

SC-7.06.A Add the following sentence immediately after the second sentence:

Contractor shall not subcontract for more than 50% of the contract price without express, written approval from Owner.

ARTICLE 8 – [NO CHANGES]

ARTICLE 9 – [NO CHANGES]

ARTICLE 10 – ENGINEER'S STATUS DURING CONSTRUCTION

SC-10.03 Project Representative

SC-10.03 Add the following new paragraphs immediately after Paragraph 10.03.A:

B. The Resident Project Representative (RPR) will be Engineer's representative at the Site, will act as directed by and under the supervision of Engineer, and will confer with Engineer regarding RPR's actions.

1. General: RPR's dealings in matters pertaining to the Work in general shall be with Engineer and Contractor. RPR's dealings with Subcontractors shall only be through or with the full knowledge and approval of Contractor. RPR shall generally communicate with Owner only with the knowledge of and under the direction of Engineer.

2. Schedules: Review the progress schedule, schedule of Shop Drawing and Sample submittals, and Schedule of Values prepared by Contractor and consult with Engineer concerning acceptability.

3. Conferences and Meetings: Attend meetings with Contractor, such as preconstruction conferences, progress meetings, job conferences, and other

Project-related meetings, and prepare and circulate copies of minutes thereof.

4. Liaison:

   a. Serve as Engineer's liaison with Contractor. Working principally through Contractor's authorized representative or designee, assist in providing information regarding the provisions and intent of the Contract Documents.

   b. Assist Engineer in serving as Owner's liaison with Contractor when Contractor's operations affect Owner's on-Site operations.

   c. Assist in obtaining from Owner additional details or information, when required for proper execution of the Work.

5. Interpretation of Contract Documents: Report to Engineer when clarifications and interpretations of the Contract Documents are needed and transmit to Contractor clarifications and interpretations as issued by Engineer.

6. Shop Drawings and Samples:

   a. Record date of receipt of Samples and Contractor-approved Shop Drawings.

   b. Receive Samples which are furnished at the Site by Contractor, and notify Engineer of availability of Samples for examination.

   c. Advise Engineer and Contractor of the commencement of any portion of the Work requiring a Shop Drawing or Sample submittal for which RPR believes that the submittal has not been approved by Engineer.

7. Modifications: Consider and evaluate Contractor's suggestions for modifications in Drawings or Specifications and report such suggestions, together with RPR's recommendations, if any, to Engineer. Transmit to Contractor in writing decisions as issued by Engineer.

8. Review of Work and Rejection of Defective Work:

   a. Conduct on-Site observations of Contractor's work in progress to assist Engineer in determining if the Work is in general proceeding in accordance with the Contract Documents.

   b. Report to Engineer whenever RPR believes that any part of Contractor's work in progress is defective, will not produce a completed Project that conforms generally to the Contract Documents, or will imperil the integrity of the design concept of the completed Project as a functioning whole as indicated in the Contract Documents, or has been damaged, or does not meet the requirements of any inspection, test or approval required to be made; and advise Engineer of that part of work in progress that RPR believes should be corrected or rejected or should be

uncovered for observation, or requires special testing, inspection or approval.

9. Inspections, Tests, and System Start-ups:

    a. Verify that tests, equipment, and systems start-ups and operating and maintenance training are conducted in the presence of appropriate Owner's personnel, and that Contractor maintains adequate records thereof.

    b. Observe, record, and report to Engineer appropriate details relative to the test procedures and systems start-ups.

10. Records:

    a. Prepare a daily report or keep a diary or log book, recording Contractor's hours on the Site, Subcontractors present at the Site, weather conditions, data relative to questions of Change Orders, Field Orders, Work Change Directives, or changed conditions, Site visitors, deliveries of equipment or materials, daily activities, decisions, observations in general, and specific observations in more detail as in the case of observing test procedures; and send copies to Engineer.

    b. Record names, addresses, fax numbers, e-mail addresses, web site locations, and telephone numbers of all Contractors, Subcontractors, and major Suppliers of materials and equipment.

    c. Maintain records for use in preparing Project documentation.

11. Reports:

    a. Furnish to Engineer periodic reports as required of progress of the Work and of Contractor's compliance with the Progress Schedule and schedule of Shop Drawing and Sample submittals.

    b. Draft and recommend to Engineer proposed Change Orders, Work Change Directives, and Field Orders. Obtain backup material from Contractor.

    c. Immediately notify Engineer of the occurrence of any Site accidents, emergencies, acts of God endangering the Work, force majeure or delay events, damage to property by fire or other causes, or the discovery of any Constituent of Concern or Hazardous Environmental Condition.

12. Payment Requests: Review applications for payment with Contractor for compliance with the established procedure for their submission and forward with recommendations to Engineer, noting particularly the relationship of the payment requested to the Schedule of Values, Work completed, and materials and equipment delivered at the Site but not incorporated in the Work.

13. Certificates, Operation and Maintenance Manuals: During the course of the Work, verify that materials and equipment certificates, operation and maintenance manuals and other data required by the Contract Documents to be assembled and furnished by Contractor are applicable to the items actually installed and in accordance with the Contract Documents, and have these documents delivered to Engineer for review and forwarding to Owner prior to payment for that part of the Work.

14. Completion:

    a. Participate in Engineer's visits to the Site to determine Substantial Completion, assist in the determination of Substantial Completion and the preparation of a punch list of items to be completed or corrected.

    b. Participate in Engineer's final visit to the Site to determine completion of the Work, in the company of Owner and Contractor, and prepare a final punch list of items to be completed and deficiencies to be remedied.

    c. Observe whether all items on the final list have been completed or corrected and make recommendations to Engineer concerning acceptance and issuance of the notice of acceptability of the work.

C. The RPR shall not:

1. Authorize any deviation from the Contract Documents or substitution of materials or equipment (including "or-equal" items).

2. Exceed limitations of Engineer's authority as set forth in the Contract Documents.

3. Undertake any of the responsibilities of Contractor, Subcontractors, or Suppliers.

4. Advise on, issue directions relative to, or assume control over any aspect of the means, methods, techniques, sequences or procedures of Contractor's work.

5. Advise on, issue directions regarding, or assume control over security or safety practices, precautions, and programs in connection with the activities or operations of Owner or Contractor.

6. Participate in specialized field or laboratory tests or inspections conducted off-site by others except as specifically authorized by Engineer.

7. Accept Shop Drawing or Sample submittals from anyone other than Contractor.

8. Authorize Owner to occupy the Project in whole or in part.

ARTICLE 11 – [NO CHANGES]

ARTICLE 12 – [NO CHANGES]

ARTICLE 13 – COST OF THE WORK; ALLOWANCES; UNIT PRICE WORK

SC-13.01 Cost of the Work

SC 13.01.B.5.c Delete Paragraph 13.01.B.5.c in its entirety and insert the following in its place:

c. Construction Equipment and Machinery:

1) Rentals of all construction equipment and machinery, and the parts thereof, in accordance with rental agreements approved by Owner with the advice of Engineer, and the costs of transportation, loading, unloading, assembly, dismantling, and removal thereof. All such costs shall be in accordance with the terms of said rental agreements. The rental of any such equipment, machinery, or parts shall cease when the use thereof is no longer necessary for the Work.

2) Costs for equipment and machinery owned by Contractor will be paid at a rate shown for such equipment in the *Rental Rate Blue Book For Construction Equipment (edition current at time of bid opening)*. An hourly rate will be computed by dividing the monthly rates by 176. These computed rates will include all operating costs. Costs will include the time the equipment or machinery is in use on the changed Work and the costs of transportation, loading, unloading, assembly, dismantling, and removal when directly attributable to the changed Work. The cost of any such equipment or machinery, or parts thereof, shall cease to accrue when the use thereof is no longer necessary for the changed Work. Equipment or machinery with a value of less than $1,000 will be considered small tools.

SC-13.03 Unit Price Work

SC 13.03.E Delete Paragraph 13.03.E in its entirety and insert the following in its place:

E. The unit price of an item of Unit Price Work shall be subject to reevaluation and adjustment under the following conditions:

1. if the extended price of a particular item of Unit Price Work amounts to 10 percent or more of the Contract Price (based on estimated quantities at the time of Contract formation) and the variation in the quantity of that particular item of Unit Price Work actually furnished or performed by Contractor differs by more than 50 percent from the estimated quantity of such item indicated in the Agreement; and

2. if there is no corresponding adjustment with respect to any other item of Work; and

3. if Contractor believes that Contractor has incurred additional expense as a result thereof, Contractor may submit a Change Proposal, or if Owner believes that the quantity variation entitles Owner to an adjustment in the unit price, Owner may make a Claim, seeking an adjustment in the Contract Price.

ARTICLE 14 – [NO CHANGES]

ARTICLE 15 – PAYMENTS TO CONTRACTOR; SET-OFFS; COMPLETION; CORRECTION PERIOD

SC 15.03.B Add the following new subparagraph to Paragraph 15.03.B:

1. If some or all of the Work has been determined not to be at a point of Substantial Completion and will require re-inspection or re-testing by Engineer, the cost of such re-inspection or re-testing, including the cost of time, travel and living expenses, shall be paid by Contractor to Owner. If Contractor does not pay, or the parties are unable to agree as to the amount owed, then Owner may impose a reasonable set-off against payments due under Article 15.

ARTICLE 16 – [NO CHANGES]

ARTICLE 17 – FINAL RESOLUTION OF DISPUTES

SC-17.02 Add the following new paragraph immediately after Paragraph 17.01.

SC-17.02 Arbitration

A. All matters subject to final resolution under this Article will be decided by arbitration in accordance with the rules of an arbitration agency as agreed upon by the Parties, subject to the conditions and limitations of this paragraph. This agreement to arbitrate and any other agreement or consent to arbitrate entered into will be specifically enforceable under the prevailing law of any court having jurisdiction.

B. The demand for arbitration will be filed in writing with the other party to the Contract and with the selected arbitrator or arbitration provider, and a copy will be sent to Engineer for information. The demand for arbitration will be made within the specific time required in this Article, or if no specified time is applicable within a reasonable time after the matter in question has arisen, and in no event shall any such demand be made after the date when institution of legal or equitable proceedings based on such matter in question would be barred by the applicable statute of limitations. The demand for arbitration should include specific reference to Paragraph SC-17.02.D below.

C. No arbitration arising out of or relating to the Contract shall include by consolidation, joinder, or in any other manner any other individual or entity (including Engineer, and Engineer's consultants and the officers, directors, partners, agents, employees or consultants of any of them) who is not a party to this Contract unless:

   1. the inclusion of such other individual or entity is necessary if complete relief is to be afforded among those who are already parties to the arbitration; and

   2. such other individual or entity is substantially involved in a question of law or fact which is common to those who are already parties to the arbitration and which will arise in such proceedings.

D. The award rendered by the arbitrator(s) shall be consistent with the agreement of the parties, in writing, and include a concise breakdown of the award, and a written explanation of the award specifically citing the Contract provisions deemed applicable and relied on in making the award.

E. The award will be final. Judgment may be entered upon it in any court having jurisdiction thereof, and it will not be subject to modification or appeal, subject to provisions of the Laws and Regulations relating to vacating or modifying an arbitral award.

F. The fees and expenses of the arbitrators and any arbitration service shall be shared equally by Owner and Contractor.

ARTICLE 18 – [NO CHANGES]

END OF DOCUMENT

DOCUMENT 00 91 13
ADDENDA

PART 1 GENERAL

1.1 PROCEDURE

A. For filing purposes, add Addenda to the Contract Documents following this page.

END OF DOCUMENT

Part 4: Technical Specifications

SECTION 01 11 01
MEASUREMENT AND PAYMENT

PART 1 GENERAL

1.1 **SCOPE**

A. Payment for the various items of the Bid Schedule, shall include all compensation to be received by Contractor for furnishing all tools, equipment, supplies, and manufactured articles, and for all labor, operations, and incidentals appurtenant to the items of work being described, as necessary to complete the various items of the Work all in accordance with the requirements of the Contract Documents, including all appurtenances thereto, and including all costs of compliance with the regulations of Owner and public agencies having jurisdiction, including Safety and Health Requirements of the Occupational Safety and Health Administration of the U.S. Department of Labor (OSHA). No separate payment will be made for any item that is not specifically set forth in the Bid Schedule, and all costs therefore shall be included in the prices named in the Bid Schedule for the various appurtenant items of work.

B. Contractor shall provide a breakdown of all lump sum bid items into the individual line items relating to the lump sum task, as specified by Engineer, prior to Notice to Proceed.

C. No additional payment will be made for rock excavation.

1.2 **SECTION INCLUDES**

A. Measurement and payment criteria applicable to portions of the Work performed under a unit price payment method.

B. Defect assessment and non-payment for rejected work.

1.3 **AUTHORITY**

A. Engineer will take all measurements and compute quantities accordingly.

B. Assist by providing necessary equipment, workers, and survey personnel as required.

1.4 **UNIT QUANTITIES SPECIFIED**

A. Quantities and measurements indicated in the Contract Documents are for bidding and Contract purposes only. Quantities and measurements supplied or placed in the Work and verified by Engineer shall determine payment.

B. If the actual Work requires more or fewer quantities than those quantities indicated, Contractor shall provide the required quantities at the unit sum/prices contained within the Bid Schedule.

1.5 **MEASUREMENT OF QUANTITIES**

A. Measurements, unless specified otherwise, shall be interpreted to mean:

1. Lump Sum (ls):	Completion of the item as a whole. Measurement of quantities in the field is not required. Payment will be based on the percentage of work completed.

2. Each (ea):	Completion of item individually. Measurement of quantities in the field.
3. Weight (ton):	By Weight: Verification of tonnage shall be documented by delivery tickets supplied by the Contractor to the City. All tickets shall indicate the Owner's name, date, type material, truck number, project location, project number, gross weight and net weight of each material. Delivery tickets are to be turned in with all applicable pay requests. Weigh Scales: Inspected, tested and certified by the applicable State Weights and Measures department within the past year. Platform Scales: Of sufficient size and capacity to accommodate the conveying vehicle. Metering Devices: Inspected, tested and certified by the applicable State department within the past year. Measurement by Weight: Concrete reinforcing steel, rolled or formed steel or other metal shapes will be measured by handbook weights. Welded assemblies will be measured by handbook or scale weight.
4. Length lineal feet (lf):	Measured along the centerline or mean chord in the field, top back of curb for curb and gutter or unless otherwise indicated. For pipe measurements there will be no deduction in length for structures.
5.Volume cubic foot (cf), cubic yard (cy):	Measured by cubic dimension using mean length, width and height or thickness. Measurement shall be based upon the establishment of a known quantity agreed upon by the City (eg. known cubic yardage of a dump truck), use of the same measuring device established throughout the work performed, filled to the same location and counted thereafter. Verification of quantity shall be documented by the Contractor to the City inspection representative. Documentation shall indicate the Owner's name, date, type material excavated, truck number, project location, project number and percent filled based upon full capacity.
7. Area	Measurement by Area: Measured by square dimension

square foot (sf), square yard (sy), Acre (ac): using mean length and width or radius.

1.6 **INCIDENTAL WORK**

A. No separate measurement or payment for incidental work.

B. Incidental Work: Any work, materials or equipment that may be reasonably be inferred from the Contract Documents or from prevailing custom or trade usage as being required to produce the intended result will be supplied by Contractor at no additional cost to Owner whether or not specifically referenced.

C. Damaged Areas: Areas damaged or disturbed by Contractor as a result of Contractor's failure to confine work activities or protect existing improvements shall not be included in the measurement to be eligible for payment.

1.7 **PAYMENT**

A. Unless specified otherwise in the bid item, payment shall include and be full compensation for the following:

1. Mobilization
2. Traffic control
3. Labor
4. Equipment
5. Tools
6. Materials
7. Products
8. Transportation of Materials (including loading, hauling, unloading)
9. Services and incidentals
10. Application or installation to render item complete as shown on Drawings, including those items that may not be specifically stated or shown but that are required to render the item complete
11. Following manufacturer's requirements for installation
12. Protection of existing utilities
13. Coordination with and notification to residents / businesses for construction
14. Coordination with Owner's representative(s)
15. Compliance with all local, State, and Federal safety requirements
16. Disposal and other fees
17. Dust control
18. Cleanup following completion of the item
19. Testing
20. Compaction
21. Overhead and profit
22. Applicable taxes, fees, bonds, and insurance
23. Restoration of damaged improvements
24. Completion of record drawings (to be provided to City Engineer)

B. Final payment for Work governed by unit prices will be made on the basis of the actual measurements and quantities accepted by Engineer multiplied by the unit sum/price for Work which is incorporated in or made necessary by the Work.

1.8 **ACRONYMS**

A. The following is a list of the most used acronyms related to bid items. This is not meant to be an exhaustive list.

1. UTBC Untreated Base Course
2. HMA Hot Mix Asphalt
3. TBC Top back of Curb
4. GB Granular Borrow
5. ADA Americans with Disabilities Act
6. HVAC Heating/Ventilation/Air Conditioning
7. SCADA Supervisory Control and Data Acquisition
8. UPDES Utah Pollutant Discharge Elimination System

1.9 DESCRIPTION OF BID ITEM

M&P Reference	Bid Item	Unit	Payment Includes	Notes
MP001	Mobilization	LS	All costs associated with mobilizing and demobilizing equipment and materials to and from the project site, mobilization, demobilization, establishment of offices, buildings, all OSHA required safety measures, sanitation, and other facilities necessary for the Work, bonds, snow removal, dust control, fees, permits (not specified as paid for elsewhere), administrative services, construction notifications, identifying and marking of construction limits and all costs associated with the Work that are not included in other bid items. Payment shall be as follows: Percent of Original Contract Amount (Completed) --> Percent of Mobilization to be (Paid): 5% --> 50%, 25% --> 25%, 75% --> 25%	

MP002	Traffic Control	LS	All traffic control needed on the job. Includes state and local permitting, sub-contractor mobilization, barricades, traffic signs, portable construction message boards, flaggers, other channelizing devices, and all other measures needed to channel traffic and to protect construction personnel and the public (vehicular and pedestrian) from harm resulting from any construction activities. Necessary notifications to public transportation and emergency service agencies with appropriate notice. Maintain reasonable continuous vehicular and pedestrian access for local residents/businesses throughout the duration of the project, including any notifications needed to communicate construction activities to the local residents/businesses. Preparation and on-going modification of a traffic control plan.	
MP003	Construction Survey	LS	Measurement: Lump Sum. Preparation for and placement of construction stakes necessary to construct the Project. Staking shall include, but not be limited to project limits, right-of-way, easements, centerline, grading, paving, utility piping, fittings, hydrants, valves, bends, manholes, inlet boxes, services, laterals, culverts, structures, fencing, cross sections of all stockpiles, final cross sections for earthwork quantities, reestablishing plan benchmarks, monuments and property corners, setting additional benchmarks as needed, and miscellaneous construction survey work.	

MP004	Curb, Type R, APWA 209 - Pinned	LF	Measured along face of each curb. Curb for median containment. Includes work and material shown in APWA 209 and project plans. Includes incidentals such as expansion joints, contraction joints, reinforcement, and protection and repair. Curbs shall be placed monolithically and pinned to the existing asphalt as shown in plans and in Plan APWA 209.	
MP005	Pavement Markings	LF	Measured per unit given for types, widths, and sizes as shown in the price schedule and project drawings. Includes, but is not limited to, incidentals such as reinstallation of existing pavement markings due to fresh asphalt being tracked on it by Contractor or other vehicles if site left unsecure. Coordination with North Ogden City Engineer if reinstallation is required. All markings are paint, unless otherwise noted. Includes Preformed Thermoplastic pavement markings. Includes Methyl Methacrylate (MMA) pavement markings. Black Backing shall be used under all paint on concrete pavement.	
MP006	Relocate Sign	EA	Includes removal and installation of all signs and posts and all associated hardware per Plans. Final location to be determined by North Ogden City Engineer. Coordinate with Engineer prior to relocating.	
MP007	Remove Sign	EA	Includes the removal of all signs per Plans within the project limits and all associated hardware and to be salvaged to North Ogden City Streets. Coordinate with North Ogden City Engineer or Streets Supervisor prior to salvaging. Payment includes surface restoration with like material surrounding area where sign was removed.	

MP008	Signage, R6-7 (End One Way)	EA	Measured for types and sizes as shown in the price schedules and project drawings. Includes all work, materials, fasteners, foundations, and associated items required to install sign and galvanized square Telespar sign posts or flexible sign base. Post installation to meet all North Ogden City Standards and Specifications and all MUTCD retro reflectivity requirements. Coordinate post heights depending on number of signs, site, and MUTCD. Includes angle brackets for angled signs. Types and preliminary locations are indicated on Plans. Contractor to field mark preliminary locations of signage. All final locations to be located by North Ogden City Engineer and Streets Supervisor. Coordinate with Engineer prior to placement. Footing surface is to be flat. This work may include boring into concrete, brick or landscaping and/or grout and bolts. Contractor is responsible to clean up site after install. Payment includes surface restoration.	
MP009	Landscaping, Rock	SF	Measured over areas of rock placement as specified in the plans. Includes weed barrier geotextile. Includes work and material to install fabric and landscape rock. Top of placed rock shall be depressed one (1) inch from final grade of adjacent flat work and curb and gutter. Contractor to provide three (3) examples to North Ogden City Engineer and Parks department. Engineer will select type and color of rock to be placed.	
MP010	Paint Existing Curb, Red	LF	Measured per unit given for the painting of the face of curb and top of curb in the location as shown in the price schedule and project drawings. Includes, but is not limited to, incidentals such as reinstallation of existing pavement markings due to fresh asphalt being tracked on it by Contractor or other vehicles if site left unsecure. Coordination with North Ogden City Engineer if reinstallation is required. All markings are paint, unless otherwise noted. Includes Preformed Thermoplastic pavement markings. Includes Methyl Methacrylate (MMA) pavement markings. Black Backing shall be used under all paint on concrete pavement.	

END OF SECTION

SECTION 01 31 13
COORDINATION

This specification changes a portion of APWA Standard Specification Section 01 31 13. All other provisions of the Section remain in full force and effect.

Add the following paragraph to Article 1.5

1.5 COORDINATION WITH ADJACENT PROPERTY OWNER

G. Includes Section 01 71 13 Mobilization. Includes Appendix 1 Sample Letters to Residents.

H. Once each week hand deliver a written **"Construction Status Update Notice"** to all residents, businesses, schools and property owners adjacent to and affected by the Work. Notice shall be on CONTRACTOR's company letter head paper and be secured to door knob should occupants not be home. Obtain ENGINEER's review of notice prior to distribution. As a minimum the notice shall contain the following.

1. Name and phone number of CONTRACTOR's representative for the project;
2. Work anticipated for the next 7 days including work locations and work by subcontractors and utility companies;
3. Rough estimate of construction schedule at the notified property;
4. Anticipated driveway approach closures;
5. Anticipated water, sewer or power outages;
6. Anticipated vehicular traffic impacts, rerouting or lane closures;
7. Anticipated pedestrian impacts and sidewalk closures;
8. Changes to public transportation bus routes; and
9. Any other construction or work items which will impact or restrict the normal use of streets and amenities.
10. Any emergency, unforeseen utility disruptions, hazardous conditions, traffic signal emergencies, loss of access notifications:

    The CONTRACTOR shall immediately respond to all emergency and/or unforeseen utility disruptions. The CONTRACTOR shall provide an explanation through the use of personal contact to those affected. The person making the contact shall provide information such as:
    - cause of disruption (i.e., whether it is construction oriented or not);
    - actions being taken to alleviate the problem; and
    - anticipated duration of the disruption.

Failure to comply with this contract provision is considered grounds for project suspension per Article 15.1 of the General Conditions (APWA Document 00 72 00).

Revised March 19, 2019

Part 5: Drawings

NORTH OGDEN CITY CORPORATION

475 EAST CLOSURE PROJECT

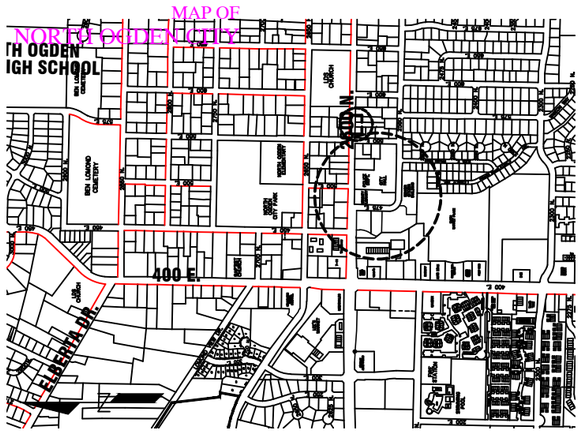

VICINITY MAP

SHEET SET ASSEMBLY ORDER

SHEET DESIGNATOR	BINDING ORDER	SHEET TITLE
GI001	1	GENERAL NOTES
CP001	2	475 EAST CLOSURE PROJECT

SITE ORIENTATION MAP

OWNER / DESIGNER

DEPARTMENT OF PUBLIC WORKS

DIRECTOR - DAVE ESPINOZA
CITY ENGINEER - ERIC CASPERSON, P.E.

165 EAST LOMOND VIEW DRIVE
NORTH OGDEN CITY, UTAH 84414
OFFICE - 801.782.8111
FAX - 801.782.6253

SURVEY CONTROL

CITY OFFICIALS

MAYOR	S. NEAL BERUBE
CITY MANAGER/ATTORNEY	JON CALL
CITY COUNCIL	RYAN BARKER
	BLAKE CEVERING
	JAY D DALPIAS
	CHRISTINA WATSON
	CHRIS PULVER

REVISIONS

475 EAST CLOSURE PROJECT

GENERAL

1. ALL CONSTRUCTION SHALL COMPLY WITH NORTH OGDEN CITY STANDARDS AND SPECIFICATIONS UNLESS OTHERWISE NOTED.
2. EXISTING UTILITY LOCATIONS SHOWN MAY NOT BE EXACT AND ALL UTILITIES MAY NOT BE SHOWN. CONTACT BLUE STAKES, SEWER DISTRICT, IRRIGATION COMPANY, & ANY OTHER REQUIRED UTILITY COMPANY PRIOR TO EXCAVATION.
3. THE CONTRACTOR SHALL HAVE ON SITE AT ALL TIMES AT LEAST ONE COPY OF THE SIGNED APPROVED PLANS AND STANDARDS AND SPECIFICATIONS, AS WELL AS ALL PERMITS AS REQUIRED TO PERFORM THE WORK.
4. THE CONTRACTOR SHALL BE RESPONSIBLE FOR PREPARING A TRAFFIC CONTROL PLAN & PROVIDING ALL TRAFFIC CONTROL DEVICES AS MY BE REQUIRED FOR CONSTRUCTION, INCLUDING FLAGGING. TRAFFIC CONTROL PLANS SHALL BE REVIEWED AND ACCEPTED BY THE CITY. ALL TRAFFIC SHALL CONFORM TO THE MOST RECENT VERSION OF THE MANUAL OF UNIFORM TRAFFIC CONTROL DEVICES (MUTCD) AND NORTH OGDEN CITY STANDARDS AND SPECIFICATIONS.
5. UTILITY TRENCHES ARE TO BE SLOPED OR BRACED & SHEETED AS PER STATE AND FEDERAL REQUIREMENTS FOR SAFETY AND PROTECTION OF WORKERS & OTHER UTILITIES. THE CONTRACTOR IS RESPONSIBLE FOR ALL PROJECT SAFETY, INCLUDING BUT NOT LIMITED TO: EXCAVATION AND SHORING, TRAFFIC CONTROL, AND SECURITY.
6. THE CONTRACTOR IS RESPONSIBLE TO COORDINATE AND COOPERATE WITH ALL UTILITY COMPANIES WITH REGARD TO RELOCATIONS OR ADJUSTMENTS OF EXISTING UTILITIES DURING CONSTRUCTION TO ASSURE THAT THE WORK IS ACCOMPLISHED IN A TIMELY MANNER & WITH MINIMUM DISRUPTIVE SERVICE.
7. THE CONTRACTOR SHALL BE RESPONSIBLE FOR RECORD DRAWING INFORMATION & SUBMIT TO THE ENGINEER PRIOR TO FINAL PAYMENT.
8. CONTRACTOR SHALL PROTECT & NOT DISTURB PROPERTY ADJACENT TO PROJECT (I.E. FENCE, LANDSCAPING, MAILBOXES, ETC.). ANY DAMAGE TO PUBLIC OR PRIVATE PROPERTY BY CONTRACTOR SHALL BE RESTORED TO EQUAL CONDITION AT CONTRACTOR'S EXPENSE.
9. EXISTING DRAINS FROM ADJACENT PROPERTIES ARE TO BE MAINTAINED AND PROTECTED.
10. THE CONTRACTOR(S) SHALL REMOVE ALL OBSTRUCTIONS, BOTH ABOVE AND BELOW GROUND, AS REQUIRED FOR THE CONSTRUCTION OF THE PROPOSED IMPROVEMENTS. THIS SHALL INCLUDE CLEARING AND GRUBBING, WHICH CONSISTS OF CLEARING THE GROUND SURFACE OF ALL TREES, STUMPS, BRUSH, UNDERGROWTH, HEDGES, HEAVY MATERIAL WHICH IN THE OPINION OF THE ENGINEER, IS SUITABLE FOR THE FOUNDATION OF PAVEMENTS OR CONCRETE. ALL MATERIAL NOT SUITABLE FOR FUTURE USE ON SITE SHALL BE DISPOSED OF OFF SITE.
11. ALL MATERIALS TO BE REMOVED SHALL BE HAULED AWAY & DISPOSED OF IN A SAFE & LEGAL MANNER BY THE CONTRACTOR.
12. CONTRACTOR IS RESPONSIBLE FOR DEWATERING AND DIVERSION OF GROUND WATER AS NECESSARY TO COMPLETE WORK.
13. THE CONTRACTOR SHALL EXAMINE THE DRAWING AND SHALL NOTIFY THE OWNER OF THE DISCREPANCIES OR CONFLICTS BEFORE PROCEEDING WITH THE WORK.
14. THE CONTRACTOR SHALL VERIFY AND BE RESPONSIBLE FOR ALL DIMENSIONS AND CONDITIONS AT THE SITE AND SHALL NOTIFY THE ENGINEER OF DISCREPANCIES BETWEEN THE ACTUAL CONDITIONS AND THE INFORMATION SHOWN ON THE DRAWINGS BEFORE PROCEEDING WITH THE WORK.
15. PROPERY IMPACTED BY PROJECT SHALL BE RESTORED TO EQUAL CONDITION, MATCHING EXISTING MATERIALS, REPLACING SPRINKLERS, DECORATIVE CURBING, ETC.
16. NEW UTILITY ALIGNMENTS SHALL BE ESTABLISHED IN THE FIELD ACCORDING TO POTHOLE FINDINGS OF EXISTING UTILITY LINES. ENGINEER TO VERIFY NEW UTILITY ALIGNMENT, PRIOR TO MILLING OR SAW-CUTTING OF ASPHALT.
17. THE CONTRACTOR IS REQUIRED TO CONTACT THE ENGINEER AT LEAST 24 HOURS PRIOR TO STARTING CONSTRUCTION.

UTILITY CONTACTS

NATURAL GAS
DOMINION ENERGY
JASON MCGEE
(801)324-3640

INTERNET
CENTURYLINK
TAYLOR CONSTANCE
(801)685-2105

COMCAST
JEFF HOUSTON
(435)224-2356

IRRIGATION
PINEVIEW WATER SYSTEMS
DOUG JEPPESEN
(801)621-6555 EXT. 1351

WATER
NORTH OGDEN CITY
JASON RENEY
WATER SYSTEMS SUPERINTENDENT
(801)782-8111

POWER
PACIFICORP
JOEL B. SIMMONS
(503)813-6993

ALLWEST
BRYCE GARDNER
(435)336-4816

COMMUNICATION
LUMEN
TAYLOR CONSTANCE
(801)685-2105

SEWER
NORTH OGDEN CITY
TRENT WILKINS
SANITARY SEWER SUPERINTENDENT
(801)782-8111

CAUTION: NOTICE TO CONTRACTOR

THE CONTRACTOR IS SPECIFICALLY CAUTIONED THAT THE LOCATION AND/OR ELEVATION OF EXISTING UTILITIES AS SHOWN ON THESE PLAN ARE BASED ON RECORDS OF THE VARIOUS UTILITY COMPANIES AND, WHERE POSSIBLE, MEASUREMENTS TAKEN IN THE FIELD. THE INFORMATION IS NOT TO BE RELIED ON AS BEING EXACT OR COMPLETE. THE CONTRACTOR MUST CALL THE LOCAL UTILITY LOCATION CENTER AT LEAST 48 HOURS BEFORE ANY EXCAVATION TO REQUEST EXACT FIELD LOCATIONS OF THE UTILITES. IT SHALL BE THE RESPONSIBILITY OF THE CONTRACTOR TO RELOCATE ALL EXISTING UTILITIES WHICH CONFLICT WTI THE PROPOSED IMPROVEMENTS SHOWN ON THE PLANS. IF A CONFLICT IS IDENTIFIED, THE ENGINEER OF RECORD SHOULD BE CONTACTED IMMEDIATELY, PRIOR TO ANY FURTHER WORK BEING DONE RELATED TO THE ISSUE.

PREPARED BY:

NORTH OGDEN CITY
SETTLED 1851

NORTH OGDEN CITY CORPORATION
PUBLIC WORKS
ENGINEERING DIVISION
165 EAST LOMOND VIEW DRIVE
NORTH OGDEN CITY, UTAH 84414
TELEPHONE: 801-782-8111
FAX: 801-782-6453
E-MAIL: WWW.NORTHOGDENCITY.COM

PROFESSIONAL SEAL:

PROJECT IDENTIFICATION:

475 EAST CLOSURE PROJECT

PROJECT OWNER:

NORTH OGDEN CITY CORPORATION
505 EAST 2600 NORTH
NORTH OGDEN CITY, UTAH 84414
WWW.NORTHOGDENCITY.COM

REV	DATE	DESCRIPTION

ENG. JOB #:
P.U. JOB #:
IFAS NO.:
PREPARER #: NOC CORP
DRAWING FILE NAME:
DRAWN BY: E. CASPERSON
CHECKED BY:

SHEET TITLE:

GENERAL NOTES

SHEET IDENTIFIER:

GI001

BINDING ORDER **1 OF 2**

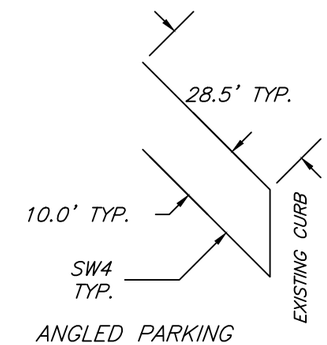

ANGLED PARKING STALL – TYP.

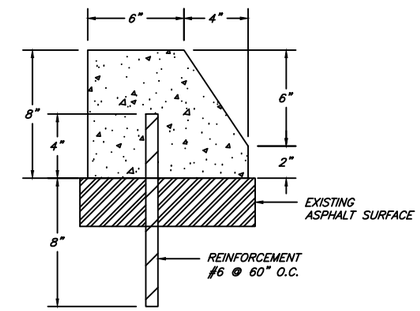

TYPE R CURB

APWA STANDARD DRAWING 209

KEYNOTES:

1. MOBILIZATION
2. SWPPP
3. CONSTRUCTION STAKING/SURVEY
4. CURB, TYPE R, APWA 209
5. PAVEMENT MARKINGS, SW4
6. RELOCATE SIGN
7. SIGNAGE, R5-1, DO NOT ENTER
8. PAINT EXISTING CURB, RED
9. LANDSCAPING, ROCK
10. REMOVE PAVEMENT MARKINGS
11. PAVEMENT MARKINGS, SY4
12. REMOVE SIGN

N

NOT TO SCALE

PREPARED BY:

NORTH OGDEN CITY
SETTLED 1851

NORTH OGDEN CITY CORPORATION
PUBLIC WORKS
ENGINEERING DIVISION
165 EAST LOMOND VIEW DRIVE
NORTH OGDEN CITY, UTAH 84414
TELEPHONE: 801-782-8111
FAX: 801-782-6453
E-MAIL: WWW.NORTHOGDENCITY.COM

PROFESSIONAL SEAL:

PROJECT IDENTIFICATION:

475 EAST CLOSURE PROJECT

PROJECT OWNER:

NORTH OGDEN CITY CORPORATION
505 EAST 2600 NORTH
NORTH OGDEN CITY, UTAH 84414
WWW.NORTHOGDENCITY.COM

REV	DATE	DESCRIPTION

ENG. JOB #:
P.U. JOB #: N/A
IFAS NO.:
PREPARER #: NOC CORP
DRAWING FILE NAME:
DRAWN BY: E. CASPERSON
CHECKED BY:

SHEET TITLE:

475 EAST CLOSURE

SHEET IDENTIFIER:

CP001

BINDING ORDER **2 OF 2**