Dawn R. Ramsey, *Mayor*
Patrick Harris, *Council Member*
Kathie L. Johnson, *Council Member*
Donald J. Shelton, *Council Member*
Tamara Zander, *Council Member*
Jason T. McGuire, *Council Member*

SOUTH JORDAN
UTAH

PH: 801.446-HELP @SouthJordanUT

Posted on April 16, 2025, on the Utah Public Notice Website https://www.utah.gov/pmn/index.html, South Jordan City Website https://sjc.utah.gov/241/City-Council and at City Hall, 1600 W. Towne Center Drive, South Jordan, UT 84095

City of South Jordan Notice of Ordinance Adoption – Ordinance 2025-08

ORDINANCE 2025-08, RE-ADOPTING THE CITY'S CONSTRUCTION STANDARDS AND SPECIFICATIONS. APPROVED ON 03-18-2025 BY 5-0 VOTE.

The complete ordinance is on file at the South Jordan City Recorder's Office and attached to this notice. Published this 16th day of April, 2025.

Anna Crookston, South Jordan City Recorder.

ORDINANCE NO. 2025-08

AN ORDINANCE OF THE CITY COUNCIL OF THE CITY OF SOUTH JORDAN, UTAH, RE-ADOPTING THE CITY'S CONSTRUCTION STANDARDS AND SPECIFICATIONS.

WHEREAS, Utah Code § 10-9a-102 grants the City Council of the City of South Jordan (the "City Council") authority to enact ordinances that it considers necessary or appropriate for the use and development of land in the City of South Jordan (the "City"), including the City's aesthetics; and

WHEREAS, the City Council has adopted Title 16 (Subdivision and Development Code) of the City of South Jordan Municipal Code ("City Code"), which requires land use applicants and developers to install certain infrastructure and utilities related to developing and subdividing land in the City; and

WHEREAS, the City Engineer has recommended that the City Council adopt by ordinance the City's Construction Standards and Specifications attached as Exhibit A (the "Standards"); and

WHEREAS, this re-adoption of the City's Construction Standards and Specifications will ensure that the City complies with the Utah Municipal Land Use, Development, and Management Act (Utah Code § 10-9a-101, *et seq.*); and

WHEREAS, the City Council held a public hearing and reviewed the Standards; and

WHEREAS, the City Council finds that the Standards will enhance the public health, safety and welfare, and will promote the goals of the General Plan.

NOW, THEREFORE, BE IT ORDAINED BY THE CITY COUNCIL OF THE CITY OF SOUTH JORDAN, UTAH:

SECTION 1. Re-Adoption. The City Council hereby re-adopts the Standards attached as Exhibit A for the purposes stated therein.

SECTION 2. Posting of the Standards. The City Engineering Department shall ensure that the Standards are available to the public by posting them on the engineering division page of the City's website (www.sjc.utah.gov/engineering/), and by keeping a printed copy of the Standards available for the public to review on the second floor of South Jordan City Hall.

SECTION 3. Severability. If any section, part or provision of this Ordinance is held invalid or unenforceable, such invalidity or unenforceability shall not affect any other portion of this Ordinance and all sections, parts, provisions and words of this Ordinance shall be severable.

SECTION 4. Effective Date. This Ordinance shall become effective immediately upon publication and posting as required by law.

PASSED AND ADOPTED BY THE CITY COUNCIL OF THE CITY OF SOUTH JORDAN, UTAH, ON THIS 18 DAY OF March, 2025 BY THE FOLLOWING VOTE:

	YES	NO	ABSTAIN	ABSENT
Patrick Harris	X			
Kathie Johnson	X			
Donald Shelton	X			
Tamara Zander	X			
Jason McGuire	X			

Mayor: Dawn R. Ramsey

Attest: Anna Crookston
City Recorder

Approved as to form:

GREGORY SIMONSEN (Mar 10, 2025 22:58 MDT)

Office of the City Attorney

City of South Jordan
CORPORATE
Seal
State of Utah

EXHIBIT A

City of South Jordan Construction Standards and Specifications

CONSTRUCTION STANDARDS AND SPECIFICATIONS

SOUTH JORDAN
UTAH

CITY OF SOUTH JORDAN
Department of Municipal Services

Updated: March 2025

INTRODUCTION

0.1 GENERAL

The purpose of the Construction Standards and Specifications is to govern any work done or improvements installed within the City of South Jordan including but not limited to excavation, construction, roadwork and public utilities. All construction shall conform to the South Jordan City Code, these construction standards and specifications, the latest edition of the APWA Manual of Standard Specifications and Manual of Standard Plans, the latest edition of the Manual on Uniform Traffic Control Devices (MUTCD) and any state or federal regulations and permit requirements of various governing bodies. Chapter 2 of these Construction Standards and Specifications serves as a supplemental to the APWA manuals. Wherever there are differences between the supplements and APWA, the most stringent or highest requirement shall govern. The Contractor is responsible to know and conform to the appropriate codes, regulations, drawings, standards and specifications. Contractors should thoroughly read and understand these associated documents before performing any work in the City. The order of precedence in case of conflict shall be (1) South Jordan City construction standards and specifications (2) APWA (3) The approved construction drawings.

This document sets forth the procedure for designing and preparing plans and specifications for projects in the City. All submitted plans shall be signed by a civil engineer registered in the State of Utah and all work shall be in accordance with good engineering practices. Any changes from the final approved set of plans must be revised by the design engineer with stamp and signature and submitted to the South Jordan City Engineering Department for approval.

TABLE OF CONTENTS

INTRODUCTION
0.1 GENERAL

CHAPTER 1 STANDARD NOTES
1.1 GENERAL
1.2 TRAFFIC
1.3 STREET LIGHT
1.4 GRADING
1.5 FIRE DEPARTMENT
1.6 WATER

CHAPTER 2 AMENDMENTS TO APWA STANDARD PLANS AND SPECIFICATIONS
2.1 GENERAL
2.2 SUPPLEMENTS TO APWA

CHAPTER 3 CULINARY WATER
3.1 INTRODUCTION AND GENERAL POLICIES
3.2 DESIGN CRITERIA
3.3 MATERIALS
3.4 PLAN PREPARATION
3.5 FEES, CHARGES AND REQUIREMENTS FOR
3.6 CONSTRUCTION STAKING
3.7 CONSTRUCTION
3.8 ABANDONMENT
3.9 TESTING AND DISINFECTING WATER MAINS
3.10 WATER SYSTEM AND WORK AREA CLEAN-UP
3.11 CROSS CONNECTIONS & BACKFLOW PREVENTION
3.12 RESERVOIRS AND PUMPING STATIONS
3.13 WATER SYSTEM MODELING REQUIREMENTS

CHAPTER 4 LANDSCAPE AND IRRIGATION
4.1 GENERAL
4.2 PRODUCTS
4.3 EXECUTION

CHAPTER 5 SECONDARY WATER
5.1 GENERAL POLICIES
5.2 DESIGN CRITERIA

CHAPTER 6 STORM DRAIN

6.1 GENERAL
6.2 REINFORCED CONCRETE PIPE
6.3 POLYPROPYLENE PIPE
6.4 STORM DATA AND IDF CURVE

CHAPTER 7 STREETS

7.1 FLEXIBLE PAVEMENT DESIGN
7.2 TESTING MATERIALS
7.3 CURB, GUTTER AND SIDEWALK
7.4 PARK STRIPS
7.5 STREET REPAIR / REPAVING POLICY
7.6 STREET WIDENING
7.7 STREET SIGNS
7.8 RESIDENTIAL STREET LEVEL OF SERVICE
7.9 TEMPORARY ROAD STANDARD
7.10 PUBLIC STREET CHECKLIST

CHAPTER 8 STREETLIGHTS

8.1 STREET LIGHT CATEGORIES
8.2 INSTALLATION

CHAPTER 9 LAND DISTURBANCE DESIGN AND CONSTRUCTION STANDARDS MANUAL

9.1 INTRODUCTION AND GENERAL POLICIES
9.2 DESIGN CRITERIA
9.3 MATERIALS
9.4 PLAN PREPARATION
9.5 FEES, CHARGES AND REQUIREMENTS FOR AUTHORIZATION OF CONSTRUCTION
9.6 CONSTRUCTION STAKING
9.7 CONSTRUCTION
9.8 ABANDONMENT
9.9 TESTING
9.10 WORK AREA CLEAN-UP
9.11 REQUIREMENTS FOR FINAL ACCEPTANCE

APPENDIXES

A STANDARD DRAWINGS
B TITLE 16.44 LAND DISTURBANCE ORDINANCE
C CITY OF SOUTH JORDAN STORM WATER MANAGEMENT PLAN
D LAND DISTURBANCE ORDINANCE PLAN CHECKLIST, APPLICATION AND AGREEMENT
E LAND DISTURBANCE PERMIT APPLICATION AND AGREEMENT
F EROSION AND SEDIMENT CONTROL PLAN, PRECONSTRUCTION MEETING INFORMATION
G LAND DISTURBANCE PERMIT, EROSION SEDIMENT CONTROL PLAN, INSPECTION AND MAINTENANCE FORM
H STORM WATER POLLUTION PREVENTION PLAN (SWPPP)

CHAPTER 10 DRINKING WATER SOURCE PROTECTION

CITY ORDINANCE CHAPTER 16.50
APPENDIX A MAP: ZONES OF INFLUENCE FOR JVWCD WELLS
APPENDIX B RESTRICTED AND PROHIBITED USES IN WATER SOURCE PROTECTION ZONES

DRAWING INDEX

WATER

3005 STANDARD SYMBOLS
3010 TRENCH CROSS SECTION TERMINOLOGY & STANDARD SIZES
3040 VALVE BOX INSTALLATION
3045 MECHANICAL JOINT TAPPING SLEEVE
3050 LOCATION OF FIRE HYDRANTS
3055 FIRE HYDRANT INSTALLATION WITH MAIN IN THE ROADWAY
3056 FIRE HYDRANT INSTALLATION WITH MAIN OUTSIDE THE ROADWAY
3060 WASHOUT VALVE ASSEMBLY
3065 WATER METER LOCATION
3070 COMBINATION AIR VACUUM VALVE ASSEMBLY
3075 AIR VENT DETAIL
3080 DIRECT BEARING THRUST BLOCKS
3085 TIE DOWN THRUST RETRAINTS
3090 ¾” and 1” METER SERVICE
3091 1 ½” and 2” METER SERVICE
3092 METER SERVICE
3095 ¾” - 2” WATER METER PLAN SERVICE INSTALLATION
3100 3” – 8” WATER VAULT DETAIL
3110 SAMPLING TAP FOR RESIDENTIAL SUBDIVISIONS
2001 BACKFLOW PREVENTION DEVICE IRRIGATION CONNECTION
------- WATER MANHOLE COVER
------- CONDUIT TERMINATION UNDER EQUIPMENT
1 of 3 PRV VAULT DETAILS
2 of 3 PRV VAULT DETAILS
3 of 3 PRV VAULT DETAILS
------- RTU PEDESTAL ELEVATION

IRRIGATION

IRR-01 LINE DRAWING TRANSFORMER ENCLOSURE
IRR-02 STRONG BOX COMBO METER ENCLOSURE
IRR-03 LINE DRAWING TRANSFORMER ENCLOSURE
IRR-04 PEDESTAL MOUNT CONTROLLER
IRR-05 SLEEVING
IRR-06 STOP & WASTE VALVE
IRR-07 BACKFLOW RPA
IRR-08 BACKFLOW COVER
IRR-09 PIPE & WIRE TRENCH
IRR-10 THRUST BLOCKING
IRR-11 LARGE GATE VALVE
IRR-12 MANUAL DRAIN
IRR-13 CONTROL VALVE MANIFOLD SCH-80
IRR-14 CONTROL VALVE MANIFOLD HARCO
IRR-15 QUICK COUPLER VALVE

IRR-16 REMOTE CONTROL VALVE
IRR-17 4 INCH POP-UP SPRAY HEAD
IRR-18 6 INCH POP-UP SPRAY HEAD
IRR-19 12 INCH POP-UP SPRAY HEAD
IRR-20 SMALL ROTOR HEAD
IRR-21 MEDIUM ROTOR HEAD
IRR-22 MEDIUM ROTOR SHRUB RISER
IRR-23 SPORTS TURF HEAD
IRR-24 TREE WATERING SYSTEM
IRR-25 IN LINE DRIP GRID LAYOUT
IRR-26 DRIP SUB SURFACE TURF
IRR-27 DRIP ON SLOPE
IRR-28 DRIP POINT SOURCE EMITTER
IRR-29 DRIP PVC TO PE CONNECTION

SECONDARY

2001 BACKFLOW PREVENTION DEVICE IRRIGATION CONNECTION
2002 SECONDARY WATER LATERAL LAYOUT
2005 VALVE BOX INSTALLATION
2006 DIRECT BEARING THRUST BLOCKS TIE DOWN RESTRAINTS
2007 TIE DOWN THRUST RESTRAINTS
2008 WASHOUT VALVE ASSEMBLY
2010 SECONDARY WATER AIR VACUUM RELEASE VALVE
2011 SECONDARY RESIDENTIAL INSTALLATION
2012 SECONDARY WATER SERVICE CONNECTION
2014 PRESSURE IRRIGATION CANAL GATE AND WEIR BOX
2015 PRESSURE IRRIGATION CANAL GATE AND WEIR BOX
2016 DRAIN VALVE DETAIL
2017 COVER COLLAR
2020 IRRIGATION SLIDE GATE DETAIL
2021 HEADWALL DETAIL
2022 HEADWALL DETAIL
2023 SILT TRAP BOX DETAIL
2024 SECONDARY WATER METER BOX

STORM DRAIN

SD-1 MANHOLE COVERS
SD-2 MANHOLE COVERS 2
SD-3 STORM DRAIN MARKERS
SD-4 STORM DRAIN MARKER ANCHORS
4010 DRY WELL
4015 RIPRAP APRON

STREETS

3010 TRENCH CROSS SECTION TERMINOLOGY & STANDARD SIZES
3012 ROAD WIDENING
S-1 ROAD WIDTHS AND BORDER AREAS
S-2 SINGLE FAMILY REAR AND SIDE PARK STRIPS ON COLLECTOR STREETS
S-3 SIGN POSTS
SN 10B SLIP BASE SIGN BASE (B3) INSTALLATION
DT-01 CURB EXTENSION
3020 SIGNAGE FOR GARBAGE ROUTES
SHUR-FLEX DRIVEABLE DELINEATOR
SHUR-FLEX SURFACE MOUNT BASE

STREETLIGHT

SL-1	STANDARD UTILITY TRENCH
SL-2	ELECTRICAL BOX LID
SL-3	STEELIGHT PEDESTALS
TSG 007077	CATEGORY 1a STREETLIGHT
TSG 002636	CATEGORY 1b STREETLIGHT
TSG 003175	CATEGORY 2 STREETLIGHT
TSG 007220	CATEGORY 3 STREETLIGHT
TSG 003314	CATEGORY 4 STREETLIGHT
SP-6224-GLV	CABLE RETAINER ASSEMBLY FOR 4” FOUNDATIN ANCHOR
SP-6200-GLV	CABLE RETAINER ASSEMBLY FOR 6” FOUNDATIN ANCHOR
SP-6205-GLV	CABLE RETAINER ASSEMBLY FOR 8” FOUNDATIN ANCHOR
SP-6358-GLV	TUBE ASSEMBLY FOR 6” CABLE RETAINER
PB-5520	DOOR ASSEMBLY TB1-17 TRANSFORMER BASE
PB-5526	DOOR ASSEMBLY TB1-20 TRANSFORMER BASE

CHAPTER 1
STANDARD NOTES

(Updated 3-19-24)

The South Jordan City Standard Notes are required to be included as part of all construction plans for residential or commercial development. Plans submitted by public or private entities for all other types of projects within City right-of-way, its easements or property shall reference the South Jordan City Standard Notes and Specifications.

1.1 South Jordan City General Notes

1. All work done or improvements installed within South Jordan City including but not limited to excavation, construction, roadwork and utilities shall conform to the South Jordan City Construction Standards and Specifications, City Municipal Code, the latest edition of the APWA Manual of Standard Specifications and Manual of Standard Plans, the latest edition of the Manual on Uniform Traffic Control Devices (MUTCD) and any state or federal regulations and permit requirements of various governing bodies. The contractor is responsible to have a copy of these specifications and to know and conform to the appropriate codes, regulations, drawings, standards and specifications.

2. The existence and location of any overhead or underground utility lines, pipes, or structures shown on these plans are obtained by a research of the available records. Existing utilities are located on plans only for the convenience of the Contractor. The contractor shall bear full responsibility for the protection of utilities and the engineer bears no responsibility for utilities not shown on the plans or not in the location shown on the plans. This includes all service laterals of any kind. The Contractor shall, at his own expense, locate all underground and overhead interferences, which may affect his operation during construction and shall take all necessary precautions to avoid damage to same. The Contractor shall use extreme caution when working near overhead utilities so as to safely protect all personnel and equipment, and shall be responsible for all cost and liability in connection therewith.

3. The Contractor shall take all precautionary measures necessary to protect existing utility lines, structures, survey monuments and street improvements which are to remain in place, from damage, and all such improvements or structures damaged by the Contractor's operations shall be repaired or replaced satisfactory to the City Engineer and owning utility company at the expense of the Contractor.

4. All construction shall be as shown on these plans, any revisions shall have the prior written approval of the City Engineer.

5. Permits are required for any work in the public way. The Contractor shall secure all permits and inspections required for this construction.

6. Curb, gutter, and sidewalk, found to be unacceptable per City Standards and APWA shall be removed and replaced.

7. Contractor shall provide all necessary horizontal and vertical transitions between new construction and existing surfaces to provide for proper drainage and for ingress and egress to new construction. The extent of transitions to be as shown on plans.

8. Any survey monuments disturbed shall be replaced and adjusted per Salt Lake County Surveyors requirements.

9. All privacy walls, new or existing, are only shown on civil plans for the purpose of reviewing grading relationships; flood control and sight distance at intersections. All walls shall have a minimum 2 ft x 2 ft x 30 inch deep spot footings. Bottom of all footings on all walls shall be a minimum of 30 inches below finished grade. Walls greater than 6 feet require a separate permit and inspection by the Building Department.

10. All construction materials per APWA must be submitted and approved by the City Engineer prior to the placement of asphalt within City Right of Way.

11. Request for inspection by the City of South Jordan engineering dept. shall be made by the contractor at least 48 hours before the inspection services will be required, except in an emergency as defined by the South Jordan City Municipal Code § 12.08.010.

12. Work in public way, once begun, shall be prosecuted to completion without delay as to provide minimum inconvenience to adjacent property owners and to the traveling public.

13. The contractor shall take all necessary and proper precautions to protect adjacent properties from any and all damage that may occur from storm water runoff and/or deposition of debris resulting from any and all work in connection with construction.

14. Power poles and/or other existing facilities not in proper location based on proposed improvements shown hereon will be relocated at no expense to the City of South Jordan. Power lines and all other aerial utilities are to be buried and poles removed as determined by the City Engineer.

15. Curb and gutter with a grade of less than four-tenths of one percent shall be constructed by forming. Each joint shall be checked for a grade prior to construction and water tested as soon as possible after construction.

16. Contractor to follow Salt Lake County Noise Ordinance Standards.

17. Contractors are responsible for all OSHA requirements on the project site.

18. A UPDES (Utah Pollutant Discharge Elimination System) permit is required for all construction activities as per state law as well as providing a Storm Water Pollution Prevention Plan to the City.

19. Developer is responsible for locating and repairing all underground streetlight wires, water lines, storm drain lines and irrigation lines until 90% of the bond has been released.

20. All City maintained utilities including; waterline, fire hydrants, streetlight wiring, and storm drain must be in public right of way or in recorded easements.

21. Contractor shall work South Jordan City regular working hours of Monday through Friday 7:00 am to 4:00 pm. If Contractor permits overtime work or work on a Saturday, Sunday or any legal holiday, Contractor shall receive prior approval by City Engineer. Contractor shall obtain all permits and pay Overtime Inspection Fee's to The City of South Jordan on the Thursday prior to the Saturday, Sunday or legal holiday requested. This applies to all work within the public right of way including traffic control and access.

22. Prior to 90% bond release, a legible as-built drawing must be submitted to the City of South Jordan stamped and signed by a professional engineer. As-builts must show all changes and actual field locations of storm drainage, waterlines, irrigation, street lighting, and power. As-builts will be held to the same standard as approved design drawings, no "redlined plans" allowed. In the absence of changes, copies of the approved drawings will be required stating "installed as per drawings". As-built drawings for new developments shall be submitted to the City in the following formats and quantities prior to the 90% bond release: 1 .dxf copy, 1 .pdf copy.

23. Filter fabric wrapped around an inlet grate is not an acceptable inlet sediment barrier. See Chapter 9 of South Jordan City Construction Standards and Specifications for details of approved storm water BMPs.

24. Asphalt paving between October 15 and April 15 is not allowed without a written exception from the Engineering Department.

25. To ensure proper planting, protection and irrigation of trees, mitigating risk of tree failure or future damage to infrastructure, contractors are required to follow the standards and specifications of the ISA – International Society of Arboriculture.

26. All small cell construction must follow the South Jordan City Small Cell Infrastructure Design Guidelines.

27. All construction of Low Impact Development (LID) must follow the South Jordan City Low Impact Development Handbook 2020. With the development of any residential subdivision that proposes LID in public park strips, the developer must construct/install such to completeness, including but not limited to vegetation and landscape irrigation. The developer is responsible to maintain the LID (including landscape) until such time the developer connects any LID landscape irrigation to owner's irrigation of the respective building lot. Developer's LID maintenance responsibilities include but not limited to cleaning, repairing, protecting and clear of any debris. The building lot owner shall maintain in perpetuity any LID constructed anywhere on the building lot, including the park strip area within public right of way.

28. When a proposed development borders a collector, minor collector or arterial street and is required to construct collector street fencing along the back of sidewalk, the development shall also be required put in a concrete mow strip from the back of sidewalk to underneath the fence panels. Concrete mow strips shall also be required between the sidewalk and fencing along the rear of double frontage lots.

29. One-way valves are required on residential land drain lines that go from a foundation drain on a home to a public storm drain system.

1.2 <u>City of South Jordan Traffic Notes</u>

1. When a designated "Safe Route To School" is encroached upon by a construction work zone the safe route shall be maintained in a manner acceptable to South Jordan City and the Jordan School District.

2. If the improvements necessitate the obliteration, temporary obstruction, temporary removal or relocation of any existing traffic pavement marking, such pavement marking shall be restored or replaced with like materials to the satisfaction of the City Engineer, Public Works Director or designee.

3. The street Sign Contractor shall obtain street names and block numbering from the Planning Department prior to construction.

4. The Contractor shall be responsible for providing and installing all permanent signs shown on the plans. Street name signs shall conform in their entirety to current City Standards. All other signs shall be standard size unless otherwise specified on the plans. All sign posts shall be installed in accordance with the current City Standards.

5. All permanent traffic control devices called for hereon shall be in place and in final position prior to allowing any public traffic onto the portions of the road(s) being improved hereunder, regardless of the status of completion of paving or other off-site improvements called for per approved construction drawings unless approved by the City Engineer.

6. The Contractor shall be responsible for notifying Utah Transit Authority (UTA) if the construction interrupts or relocates a bus stop or has an adverse effect on bus service on that street to arrange for temporary relocation of stop.

7. Before any work is started in the right-of-way, the contractor shall install all advance warning signs for the construction zone. The contractor shall install temporary stop signs at all new street encroachments into existing public streets. All construction signing, barricading, and traffic delineation shall conform to the Manual of Uniform Traffic Control Devices (MUTCD) per the current edition adopted by UDOT and be approved by the City of South Jordan before construction begins.

8. All signs larger than 36" X 36" or 1296 square inches per sign pole shall be mounted on a Slip Base system per UDOT standard drawing SN 10B (detail drawing attached to standard drawings) with a "Z" bar backing. Signs of this size are not allowed to be mounted on a yielding pole.

9. Sign components such as sheeting, EC film, inks, letters and borders are all required to be from the same manufacturer. Only EC film may be used to achieve color. Vinyl EC film is not accepted.

10. All new roundabouts, crosswalks, stop lines and legends shall be installed with 90 mil preformed thermo-plastic.

11. Stop Lines are required anytime a stop sign is installed.

12. Paving asphalt binder grade shall be PG 58-28 unless otherwise approved by the City Engineer. Asphalt aggregate size shall be ½ inch for residential and collector roads. No more than 15% RAP (reclaimed asphalt pavement) by weight will be allowed in the asphalt mix design for the paving of public and private streets. Up to the 15 percent will be allowed with no change in the specific binder grade. The asphalt mix design shall have no more than 3½ % air voids.

13. Potholing: All potholes must be saw cut square and have a minimum size of 1 square foot. When repairing a pothole, sand or pea gravel meeting South Jordan City standards shall be placed over the exposed utility to a depth of 6 inches. Following the pea gravel will be flowable fill up to 1 inch below the bottom edge of the existing asphalt. The remaining portion of the hole shall be filled with asphalt, which will have an overall thickness of the existing asphalt plus 1 inch.

14. All fill within the public right of way shall be A-1-A to A-3, with the exception of top soil in the park strip for landscaping and trench backfill. Trench backfill material under pavements or surface improvements shall be clean, non-clumping, granular and flowable, 2" minus, A-1-a to A-2-7 soils according to AASHTO 145 soil Classification System. Lime treated flowable fills, if approved, shall have a 28-day strength of 65 PSI.

15. All traffic road closures involving 1 or more lanes of traffic must receive prior approval from the City Engineer or his/her representative. VMS PCMS boards must be placed a minimum of 7 days in advance of any lane closure on collector, minor collector or arterial street. VMS PCMS boards must also be placed in advance of any lane closures on a subdivision street per the City Engineer's direction.

16. Roundabouts, including their ingress and egress, shall be constructed with concrete pavement. Engineer shall design cross section and submit to the City for review and approval.

17. Alleyways and Lanes are to have 6 feet maximum spacing for control joints in straight sections and are to have an expansion joint every 60 feet and at all pc's and pt's.

18. Construction of any public street requires a sign off checklist prior to the road being opened to traffic for use by the general public. The checklist must be requested by the Developer. The city's assigned project engineer will prepare the checklist and provide it to the developer/contractor.

19. Trees are not allowed to be planted within 30' of a stop sign.

20. Traffic signal poles, mast arms and luminaire extensions must be black powder coated.

1.3 City of South Jordan Street Light Notes

All work shall be installed in accordance with the most current South Jordan City Standards and N.E.C. (National Electric Code). A street light plan showing wiring location, wiring type, voltage, power source location, conduit size and location shall be submitted to the City of South Jordan and be approved prior to construction. No deviation of streetlight, pull boxes, conduits, etc. locations shall be permitted without prior **WRITTEN APPROVAL** from the City Engineer or his/her representative.

An electronic copy of the street light redlines, showing the same items listed above for the street light plan, shall be submitted to the South Jordan City Engineering Department after the street lights have been installed but prior to them being connected by Rocky Mountain Power.

1. Location of the Street light pole.

    a. Shall not be installed within 5 feet of a fire hydrant. The location shall be such that it does not hinder the operation of the fire hydrant and water line operation valves.

b. Shall be a minimum of 5 feet from any tree, unless written approval is received from the City Engineer. Branches may need to be pruned as determined by the Engineering Inspector in the field at the time of installation.

c. Shall not be installed within 5 feet from the edge of any driveway.

2. Anti-seize lubricant shall be used on all cover bolts and ground box bolts.

3. All existing street lighting shall remain operational during construction.

4. Any structure such as block walls, chain link fences, retaining walls, etc. shall leave a minimum of eighteen (18) inches to the face of the street light pole on all sides.

5. All service point(s) shall be coordinated with Rocky Mountain Power and whenever possible be located near the center of the circuit. Service point(s) shall be shown on the plans with a schematic from Rocky Mountain Power. Pole locations as shown on the approved plans may be adjusted in the field by the Engineering Inspector at time of installation at no additional cost to the City.

6. It shall be required that in the absence of an existing workable circuit to attach to, that all installations shall require a new service for operation of the circuits in this case developer and or his engineer shall contact Rocky Mountain Power.

7. Wherever there is an overhead utility that may conflict with the installation of the street light circuits and/or streetlight poles, those conflicts must be resolved between the developer and the utilities involved before the street light bases are constructed at no expense to the City of South Jordan or Rocky Mountain Power. The resolution must be approved by the City of South Jordan and Rocky Mountain Power.

8. The contractor shall furnish a complete service to the transformers and control systems if required on the plans and/or is deemed necessary by Rocky Mountain Power and/or South Jordan City.

9. A street light plan showing wiring location, wiring type, voltage, power source location, conduit size and location shall be submitted to the City of South Jordan and be approved prior to construction.

10. The contractor shall be required to perform a 10 day burn test of the street lights after they are connected and energized by Rocky Mountain Power. This test shall be coordinated and witnessed by a South Jordan Engineering Inspector.

11. Each streetlight pole shall have its own photo cell independent of a master control. On double head fixtures a single photo cell shall be installed on the north most facing head and be wired to energize both heads.

1.4 City of South Jordan Grading Notes

1. In the event that any unforeseen conditions not covered by these notes are encountered during grading operations, the Owner and City Engineer shall be immediately notified for direction.

2. It shall be the responsibility of the Contractor to perform all necessary cuts and fills within the limits of this project and the related off-site work, so as to generate the desired subgrade, finish grades and slopes shown.

3. Contractor shall take full responsibility for all excavation. Adequate shoring shall be designed and provided by the Contractor to prevent undermining of any adjacent features or facilities and/or caving of the excavation.

4. The Contractor is warned that an earthwork balance was not necessarily the intent of this project. Any additional material required or leftover material following earthwork operations becomes the responsibility of the Contractor.

5. Contractor shall grade to the lines and elevations shown on the plans within the following horizontal and vertical tolerances and degrees of compaction, in the areas indicated:

	Horizontal	Vertical	Compaction
a. Pavement Area Subgrade	0.1'+	+0.0' to –0.1'	See soils Report
b. Engineered Fill	0.5'+	+0.1' to –0.1'	See Soils Report

   Compaction Testing will be performed by the developer or his representative.

6. All cut and fill slopes shall be protected until effective erosion control has been established.

7. The use of potable water without a special permit for building or construction purposes including consolidation of backfill or dust control is prohibited. The Contractor shall obtain all necessary permits for construction water from the Public Works Department.

8. The Contractor shall maintain the streets, sidewalks and all other public right-of-way in a clean, safe and usable condition. All spills of soil, rock or construction debris shall be promptly removed from the publicly owned property during construction and upon completion of the project. All adjacent property, private or public shall be maintained in a clean, safe and usable condition.

9. In the event that any temporary construction item is required that is not shown on these drawings, the Developer agrees to provide and install such item at his own expense and at the direction of the City Engineer. Temporary construction includes ditches, berms, road signs and barricades, etc.

10. All grading work shall conform to the soils report as prepared by the Soils Engineer and approved by the City Engineer, and as shown on these plans.

1.5 City of South Jordan Fire Department Notes

1. On any new home or building installation, accessible fire hydrants shall be installed before combustible construction commences and said fire hydrants shall be in good working order with an adequate water supply.

2. Contractor shall call the Public Works Department and Engineering Inspector for underground inspection, pressure and flush verification of all fire hydrants and fire lines before back filling.

3. Painting of the curbs and hydrant and any work necessary for protection of hydrants from physical damage shall be approved before being constructed.

4. A flow test must be witnessed by the Fire Department prior to occupancy for verification of required on-site water supply.

5. All on-site fire main materials must be U.L. listed and A.W.W.A. approved.

6. The turning radius for any fire apparatus access road and/or fire lane, public or private, shall be not less than forty-five feet (45’) outside radius and twenty-two feet (22’) inside radius and shall be paved.

7. A fire apparatus road shall be required when any portion of an exterior wall of the first story is located more than one-hundred fifty feet (150’) from Fire Department vehicle access roads and/or fire lanes, public or private, in excess of one-hundred fifty feet (150’) in length shall be provided with an approved turn around area.

8. Access roads shall be marked by placing approved signs at the start of the designated fire lane, one sign at the end of the fire lane and width signs at intervals of one-hundred feet (100') along all designated fire lanes. Signs to be placed on both sides of an access roadway if needed to prevent parking on either side. Signs shall be installed at least 5’, measured from the bottom edge of the sign to the near edge of pavement. Where parking or pedestrian movements occur, the clearance to the bottom of the sign shall be at least 7’. The curb along or on the pavement or cement if curb is not present, shall be painted with red weather resistant paint in addition to the signs.

9. Electrically controlled access gates shall be provided with an approved emergency vehicle detector/receiver system. Said system shall be installed in accordance with the South Jordan City F.D. approval. Gates are only allowed with prior approval.

10. All underground fire lines that service automatic fire sprinkler systems shall be no smaller than six (6) inches in diameter and have a PIV between the water main and the building. If a PIV isn’t feasible due to site constraints, a WIV may be used with the approval of the City Engineer or Fire Code Official. For a WIV to be allowed, another valve must be installed on the fire service line back at the

connection to the water main, which will be maintained by the City as part of its culinary water system. All fire lines material shall be Ductile Iron. (Ductile Iron from the PIV to the building shall be permitted or Ductile Iron from the main water line to the WIV).

11. Post Indicator Valves (PIV) shall be between 6 and 40 feet from buildings not exceeding three stories or equivalent in height and between 30 and 40 feet on buildings in excess of three or more stories in height or equivalent.

12. Roads and accesses shall be designed and maintained to support the imposed loads of fire apparatus. Surface shall be paved before the application of combustible material.

13. All new buildings equipped with a Fire Department Connection (FDC) must have inlets secured with Knox brand locking FDC cap(s) with a swivel collar. All new buildings are also required to have a Knox brand key lock box mounted on the exterior building, such that Fire Department personnel may gain access in case of an emergency.

1.6 South Jordan City Water Notes

1. The following South Jordan City Water Notes are intended for general water standards only and are not all inclusive. The City has included the Culinary Water Design and Construction Standards within the City Construction Standards and Specifications.

2. No work shall begin until the water plans have been released for construction by the Engineering Department. Following water plan approval, forty-eight (48) hour notice shall be given to the Engineering Inspector and the Public Works Department (253- 5230) prior to the start of construction. Notice must be given by 2:00 P.M. the business day prior to an inspection.

3. All work within South Jordan City shall conform to South Jordan City Standards and Specifications, AWWA and APWA.

4. For Residential Developments - The developer shall purchase and install meter boxes and setters according to City Standards on newly developed lots and real property at the time of water main installation. Water meters will be supplied and installed by the South Jordan Public Works Department (at Developer's expense). The developer shall also provide the site address, lot number, meter size and pay meter fees prior to building permit approval.

5. For Commercial and Condominium Developments - The developer shall purchase and install meter boxes and setters according to City Standards. Water meters will be supplied by South Jordan Public Works Department (at Developer's expense) and installed by Developer.

6. All water facilities shall be filled, disinfected, pressure tested, flushed, filled and an acceptable water sample obtained prior to commissioning the new water line to the South Jordan City Culinary Water Distribution System.

7. South Jordan Public Works Department must approve water shut down which may require evening and weekend shut down as deemed necessary, requiring the contractor to be billed for overtime. 48 hour notice is required.

8. Water stub-out installations will not be construed as a commitment for water service.

9. Conditional Approval of Valved Outlet (6" and Larger):
   In the event the water plans show one or more valved outlets extending out of paved areas, installations of these outlets is acceptable, however, if the outlets are incorrectly located or not used for any reason when the property is developed, the developer shall abandon the outlets at the connection to the active main in accordance with the city standards and at the developer's expense.

10. All lines to be pressure tested according to South Jordan City and AWWA standards and chlorinated prior to use and final acceptance.

11. All fittings to be coated with poly fm grease and wrapped with 8-mil thick polyethylene.

12. No other utility lines may be placed in the same trench with water line unless approved by the City Engineer.

13. Any conflict with existing utilities shall be immediately called to the attention of the City Engineer or designee.

14. All water vaults will be constructed per City of South Jordan standard drawings and specifications. No vaults are allowed in traffic areas without prior approval of the City Engineer.

15. Landscaping and irrigation adjacent to vaults shall drain away from vaults.

16. Once the waterline has been tested, approved and city water is flowing through the pipe, only City personnel are authorized to shut down and charge the waterline.

17. Megalug following ring or an approved equivalent shall be used on all fittings.

18. APWA plan 562, City requires stainless steel tie-down restraints with turnbuckles only. 5/8" rebar is not acceptable. Megalug followers required on all fittings and all dimensions of thrust blocking still apply. Thrust blocks may be eliminated if horizontal tie down restraints have been pre-engineered and receive prior City approval.

19. Water mains will be hot tapped as called out on the approved plans. Under special circumstances, when a contractor submits a request for a shutdown contrary to the approved plans and the request is approved at the discretion of the City Engineer or designee, the contractor must provide 48-hour notice to neighbors and those affected. If businesses are impacted by the shutdown it will be done after hours and all overtime fees for City personnel, equipment and vehicles must be paid in advance.

20. Contractors are required to write the lot number with a black permanent marker on the inside of the water meter barrels as they are installed.

CHAPTER 2
AMENDMENTS TO APWA
STANDARD PLANS AND SPECIFICATIONS

(Updated 3-2-21)

2.1 GENERAL

This document modifies the latest edition of the APWA "Manual of Standard Specifications". Affected paragraphs or articles are noted by section number; additions or changes to text follow the section numbers. All other provisions in the manual remain in full force and effect.

2.2 SUPPLEMENTS TO APWA

Sec. 01 31 13	Add the following to 1.3:
	A. Modifications to existing utilities shall conform to the owner's utility standards and specifications.

Sec. 02 41 14	Add the following to 3.5:
	C. Exact location of all sawcut lines may be adjusted or determined in the field by the City Engineer if location on plans is not clearly shown, or existing pavement conditions require relocation.

Sec. 03 30 04	Delete 2.5.D.2.b and replace with the following:
	2.5.C.2.b Replace up to 15 percent of the cement by weight on a minimum basis of 1 part fly ash to 1 part cement.

Sec. 31 05 13	Delete and replace 2.2.A and add sections 2.2.C and 2.2.D:
	2.2.A Classifications A-1. 2.2.C Well graded material with 100% passing 3" sieve and 70%-90% passing 2" sieve. 2.2.D No river rock or round aggregate.

Sec. 31 05 13	Delete and replace 2.3.A and 2.3.C and add section 2.3.E:
	2.3.A Classifications A-1-a. 2.3.C 100% passing 2" sieve and 70%-90% passing 1" sieve. 2.3.E No river rock or round aggregate.

Sec. 31 05 13	Delete paragraph 2.7.A and replace with the following:
	A. All sand shall be clean sand mixture free from clods of earth debris, alkali, salt, petroleum products, vegetative matter or other deleterious or decomposable matter, frozen material, slag, cinders, ashes and rubbish or other material that in the opinion of ENGINEER may be objectionable or deleterious. "Squeegee" or any other flowable material shall not be permitted. Sand shall conform to the following gradation:

US Standard Sieve Size (Square Opening)	Percent By Weight Passing Screen
¾ - Inch	100
No. 4	80 - 100
No. 10	30 - 50
No. 40	10 - 30
No. 200	0 - 15

Sec. 31 05 13	Add the following to 2.3:
	F. Trench backfill material shall be borrow, unless approved otherwise by South Jordan City Engineering

Sec 32 11 23	Delete and replace Section 1.6.B Gradation with:
	B. Gradation: Lot size is one (1) day production. Sub-lot size is 500 tons. Collect samples from grade before compaction. Conduct at least one (1) gradation analysis for each sub-lot. Lot is acceptable if all gradation tests are within the allowable tolerance (Table 1) from the Target Grading Curve.

Table 1: Gradation Tolerance from the Target Grading Curve	
Sieve Size	Gradation Tolerance
3/8" and Larger Sieves	±9.0
No. 4 Sieve	±7.0
No. 16 Sieve	±5.0
No. 200 Sieve	±3.0

Delete Section 2.2 TREATED BASE COURSE - The City does not allow Treated Base Course.

Delete and replace Section 3.2.B with:

B. Provide aggregate suitable for the following locations.

Table 5 – Placement Type, Location Aggregate Class & Grade							
Type	Location	Aggregate Class			Aggregate Grade		
		A	B	C	1-1/2	1	3/4

I	Pavement (includes curb, gutter and waterway when in conjunction with pavement placement)	X			X		
II	Concrete flat work (includes driveway approach, curb cut assembly, curb, gutter, sidewalk, waterway, etc)	X			X	X	X
III	Landscape (includes non-structural, non-load bearing areas)	X	X	X	X	X	X

NOTES:
(a) X indicates where placement is allowed

Sec. 32 12 05	Remove the following from 2.3.D:
	2. Allowed from 15 to 30 percent by weight of RAP or binder, whichever is lesser, if the binder grade is adjusted according to AASHTO M 323 to meet the specified binder grade.

Sec. 32 12 16	Add the following to 3.2.A:
	6. All utilities including water, sewer, storm drain, gas, phone, and cable (including laterals) in roadways must be installed prior to pavement construction.

Sec. 32 12 16	Add the following to 3.7.A:
	3. AC pavement to be one-half inch (1/2”) above lip of all gutters after compaction, except at sidewalk ramps or waterways.

Sec. 32 12 16	Add the following to 3.7 E:
	5. Marriages of asphalt shall be vertical, with complete marriage and with no gaps. Marriage will be crack sealed.

Sec. 32 16 13	Add the following to 3.2:
	E. No structures; including utility company boxes, manhole lids, valve covers, water service meters, vents, etc., shall be located in driveways, driveway aprons, curbs, gutters or waterways unless written approval is granted by the utility company and the City Engineer.

Sec. 32 16 13	Add the following to 3.9 B:
	3. All sidewalks and curb and gutter shall be completely backfilled to within 3 inches of the top back of curb (TBC) and within 3 inches of the top of sidewalk.

Sec. 33 05 14	Add the following to 3.1:
	E. Contractor shall adjust all new and existing inlets, valve boxes, manhole rims, and sewer clean outs, etc. to finish grade as applicable whether or not they are shown on the plans.

Plan 315.1	Delete and replace item 3.B with:
	"3.B No hooded grates are allowed unless approved by the City Engineer"

Plan 315.2	Delete and replace item 3.B with:
	"3.B No hooded grates are allowed unless approved by the City Engineer"

Plan 316	Delete and replace item 3.B with:
	"3.B No hooded grates are allowed unless approved by the City Engineer"

Plan 802	Add the following to Note:
	Concrete replacement shall be from cold joint to cold joint.

Plan 802	Modify the following Note:
	"Vertical or horizontal displacement of ½" or more, replacement is required." shall be changed to read "Vertical or horizontal displacement more than ¼ inch shall be replaced. ¼ inch expansion joint vertical hazard shall be cut down."

CHAPTER 3
CULINARY WATER

(Updated 3-18-25)

DETAILED
TABLE OF CONTENTS

3.1 INTRODUCTION AND GENERAL POLICIES
3.1.1 SCOPE
3.1.2 INTERPRETATION
3.1.3 DEFINITIONS AND TERMS
3.1.4 APPLICABLE CODES AND POLICY
3.1.5 GENERAL METER POLICY
3.1.6 ENGINEERING DEPARTMENT JURISDICTION
3.1.7 PUBLIC WORKS DEPARTMENT JURISDICTION
3.1.8 FIRE PROTECTION WITHIN CITY
3.1.9 DEVELOPER ENGINEER'S RESPONSIBILITY
3.1.10 REFERENCED SPECIFICATIONS
3.1.11 CITY ENGINEER ACCEPTANCE
3.1.12 METRIC UNITS
3.1.13 REQUIREMENTS FOR FINAL ACCEPTANCE

3.2 DESIGN CRITERIA
3.2.1 CITY WATER SYSTEM
3.2.2 WATER MAIN PRESSURES, CAPACITIES AND SIZES
3.2.3 SELECTION OF PIPE TYPES AND CLASS
3.2.4 LOCATION OF LINES AND FIRE HYDRANTS (Streets)
3.2.5 LOCATION OF WATER LINES (Easements)
3.2.6 DEPTH OF WATER MAINS
3.2.7 LOCATION AND SIZE OF VALVES
3.2.8 AIR AND VACUUM ASSEMBLIES
3.2.9 BLOWOFF ASSEMBLIES
3.2.10 DESIGNS FOR PROPER FLUSHING
3.2.11 HORIZONTAL AND VERTICAL CURVES
3.2.12 PROPER SIZING OF WATER METERS AND SERVICE LINES
3.2.13 LOCATION OF METER BOXES, FIRE HYDRANTS, AND AIR RELEASE ASSEMBLIES
3.2.14 STRUCTURAL REQUIREMENTS
3.2.15 FIRE SERVICE LINES

3.3 MATERIALS

3.3.1 GENERAL REQUIREMENTS
3.3.2 TESTING AND FINAL ACCEPTABILITY OF MATERIAL
3.3.3 MAIN LINE PIPE MATERIALS
3.3.4 MAIN LINE FITTINGS
3.3.5 SERVICE LINE MATERIALS AND FITTINGS
3.3.6 METER BOXES AND VALVES
3.3.7 WATER METERS
3.3.8 MAIN LINE VALVES
3.3.9 COMBINATION AIR RELEASE ASSEMBLIES
3.3.10 BLOWOFF ASSEMBLIES (See Standard Drawings)
3.3.11 FIRE HYDRANT ASSEMBLIES (See Standard Drawings)
3.3.12 PIPE TRENCH MATERIALS
3.3.13 ROAD WAY MATERIALS
3.3.14 CONCRETE MATERIAL
3.3.15 PAINTING
3.3.16 MARKER POSTS

3.4 PLAN PREPARATION

3.4.1 GENERAL
3.4.2 SHEET SIZE AND MARGINS
3.4.3 SIGNATURE BLOCK
3.4.4 COVER SHEET
3.4.5 PLAN OF CULINARY WATER SYSTEM
3.4.6 PROFILE OF CULINARY WATER SYSTEM
3.4.7 GRAPHIC SCALES AND NORTH ARROW
3.4.8 PROCEDURE FOR APPROVAL
3.4.9 PLAN CHECKING LIST
3.4.10 STANDARD LANGUAGE FOR DEDICATION OF FACILITIES TO CITY
3.4.11 STANDARD NOTES

3.5 FEES, CHARGES AND REQUIREMENTS FOR AUTHORIZATION OF CONSTRUCTION

3.5.1 GENERAL
3.5.2 SUBMITTAL OF BLUELINE PRINTS (PLAN CHECK)
3.5.3 SPECIAL PROVISIONS
3.5.4 EASEMENTS
3.5.5 AGREEMENTS, BONDS, AND INSURANCE CERTIFICATES
3.5.6 WATER AVAILABILITY LETTER
3.5.7 APPROVAL FOR CONSTRUCTION
3.5.8 SERVICE LINE, FIRE HYDRANT OR METER INSTALLATION
3.5.9 SPECIAL CHARGES
3.5.10 MAINLINE EXTENSION AND OVERSIZING AGREEMENTS AND LOCAL SHARES
3.5.11 FEES FOR PLAN CHECKING AND TESTING OF BACKFLOW DEVICES

3.6 CONSTRUCTION STAKING

3.6.1 GENERAL REQUIREMENTS
3.6.2 PRESERVATION OF STAKES
3.6.3 SERVICE LINES
3.6.4 "AS-BUILT DRAWINGS"

3.7 CONSTRUCTION

3.7.1 GENERAL REQUIREMENTS
3.7.2 PERMITS
3.7.3 SHIPMENT AND DELIVERY
3.7.4 CLEARING AND GRUBBING
3.7.5 UTILITIES, EXISTING FACILITIES AND CONCRETE REMOVAL
3.7.6 EXCAVATION AND TRENCHING
3.7.7 PIPE BEDDING AND LAYING
3.7.8 THRUST BLOCKS, SUPPORTING OF VALVES, ETC.
3.7.9 HOT TAPPING
3.7.10 SERVICE CONNECTIONS AND SERVICE LINES
3.7.11 INSTALLATION OF VALVES AND FITTINGS
3.7.12 INSTALLATION OF AIR RELEASE AND BLOWOFF ASSEMBLIES
3.7.13 INSTALLATION OF FIRE HYDRANT ASSEMBLIES
3.7.14 INSTALLATION OF METER BOXES, PRESSURE REGULATORS
3.7.15 BACKFILL AND COMPACTION
3.7.16 RESURFACING AND RESTORATION
3.7.17 BORING AND JACKING OPERATIONS
3.7.18 CONCRETE AND MORTAR WORK
3.7.19 CONSTRUCTION WATER
3.7.20 PAINTING
3.7.21 SAFETY

3.8 ABANDONMENT

3.8.1 GENERAL
3.8.2 WATER SYSTEM APPURTENANCES

3.9 TESTING AND DISINFECTING WATER MAINS

3.9.1 GENERAL
3.9.2 HYDROSTATIC TESTING
3.9.3 ROLE OF FLUSHING
3.9.4 DISINFECTING WATER MAINS
3.9.5 FINAL FLUSHING
3.9.6 BACTERIOLOGICAL TESTS
3.9.7 REDISINFECTION
3.9.8 FINAL CONNECTION TO EXISTING MAINS
3.9.9 DISINFECTION PROCEDURES WHEN CUTTING INTO OR REPAIRING EXISTING MAINS
3.9.10 SPECIAL PROCEDURE FOR CAULKED TAPPING SLEEVES
3.9.11 TESTING FOR FIRE FLOW OR PRESSURE

3.10 WATER SYSTEM AND WORK AREA CLEAN-UP
3.10.1 FINAL PROJECT CLEAN-UP

3.11 CROSS CONNECTIONS & BACKFLOW PREVENTION
3.11.1 GENERAL
3.11.2 JURISDICTION, AUTHORITY, REFERENCES
3.11.3 TYPES OF BACKFLOW PREVENTION
3.11.4 REQUIREMENTS
3.11.5 INSTALLATION
3.11.6 APPROVED DEVICES
3.11.7 TESTING AND MAINTENANCE

3.12 RESERVOIRS AND PUMPING STATIONS
3.12.1 GENERAL
3.12.2 RESERVOIR STORAGE
3.12.3 RESERVOIR STRUCTURAL DESIGN
3.12.4 GENERAL RESERVOIR DESIGN PARAMETERS
3.12.5 PUMPING STATION DESIGN
3.12.6 SYSTEM CONTROL AND DATA ACQUISITION (SCADA) SYSTEM
3.12.7 PRESSURE REDUCING STATIONS / FLOW CONTROL STATIONS

3.13 WATER SYSTEM MODELING REQUIREMENTS
3.13.1 MODELING INSTRUCTIONS
3.13.2 DELIVERABLES
3.13.3 DEMAND SUMMATION
3.13.4 SCENARIO DEMAND ASSUMPTIONS
3.13.5 FIRE FLOW DEMAND ASSUMPTIONS
3.13.6 NON–RESIDENTIAL ASSUMPTIONS PER LAND USE TYPE
3.13.7 DEMAND SUMMATION
3.13.8 FLOW MODELING ASSUMPTIONS

SECTION 3.1

INTRODUCTION AND GENERAL POLICIES

3.1.1 SCOPE

The design and construction of culinary water mains and other appurtenances in South Jordan City shall comply with these standards herein called "Culinary Water Design and Construction Standards", or the permit requirements of various governing bodies, except where specific modifications have been approved, in writing, by the City Engineer. All submitted plans shall be stamped and signed by a civil engineer, registered in the State of Utah, and all work shall be in accordance with good engineering practices. Approval of these plans for water installation will not be construed as a commitment for water services.

This document sets forth the procedure for designing and preparing plans and specifications for culinary water systems built for the City. Wherever there are differences between these standards and other county, state or federal regulations, the most stringent or highest requirement shall govern.

3.1.2 INTERPRETATION

The City Engineer shall decide all questions of interpretation of "good engineering practices" being guided by the various standards and manuals to include those published by the American Water Works Association (AWWA) and American Public Works Association (APWA).

3.1.3 DEFINITIONS AND TERMS

Whenever in these specifications or in any document or instruments where these specifications govern, the following terms, abbreviations or definitions are used, the intent and meaning shall be interpreted as follows:

ABBREVIATIONS

AASHTO	American Association of State Highway and Transportation Officials
ACI	American Concrete Institute
ANSI	American National Standards Institute
APWA	American Public Works Association
ASCE	American Society of Civil Engineers
ASTM	American Society for Testing and Materials
AWWA	American Water Works Association
O&M	Operations and Maintenance

IBC	International Building Code
IPC	International Plumbing Code

Pipe Types:

AC	Asbestos Cement
CI	Cast Iron
CMP	Corrugated Metal Pipe
DIP	Ductile Iron Pipe
HDPE	High Density Polyethylene
ML & C Steel	Mortar Lined and Coated Steel Pipe
PB	Polybutylene
PE	Polyethylene
PVC	Poly-Vinyl Chloride
RC	Reinforced Concrete

DEFINITIONS

"Acceptance" Field acceptance is the time when the Engineering Department inspector approves the physical installation of the water system. The City Engineer acceptance or final acceptance follows field acceptance and is when the City Engineer approves both physical improvements as well as the administrative items associated with development, and the Public Works Department accepts ownership and operations and maintenance responsibilities.

"Approved" Unless specifically otherwise indicated, this shall mean approval by the City Engineer.

"Backbone Pipeline" A main pipeline which delivers flow to a main section of the (Transmission Pipeline) service area.

"City" South Jordan City, Utah

"City Engineer" City Engineer shall mean the City Engineer of South Jordan City, or the person(s) engaged by the City and authorized to perform the duties assigned to the City Engineer, and shall include any deputies and representatives.

"Contractor" Anyone who does construction work in the City.

“County” Salt Lake County, Utah

“Developer” An individual or organized group; partnership, corporation, etc.; proposing to subdivide or improve land which will require culinary water from the City's system.

“Developers Engineer” The engineer licensed by the State of Utah as a civil engineer, employed by the developer, under whose direction construction plans, profiles and details of the work are prepared and submitted to the City for review and approval.

“Distribution Pipeline” Waterlines which are connected to transmission pipelines and are usually smaller pipelines of 12”-inches and smaller.

“Easement” A recorded document in which the landowner gives the City permanent right to construct and maintain a waterline across private property.

“Engineer” A professional engineer or firm of professional civil engineers appointed by and acting for the Engineering Department in the case of a City sponsored capital project. In the case of a developer sponsored project, the term refers to the engineer hired by the developer and may also be referred to as “developer’s engineer”.

“Engineering Department” The City department responsible for planning, designing, and construction of the City’s culinary water system.

“Fire Department” South Jordan City Fire Department.

“Fire Service Line” A line whose sole function is to serve a particular building or property with fire protection.

“House Plumbing” Plumbing fixtures, devices and piping within a building or structure including pipes on the property from the meter.

“Inspector” An employee or agent of the City engaged to observe and record field compliance with design criteria, plans, and construction standards.

“Main Line” Main line pipelines area also referred to as “Backbone or Transmission Pipelines”, which are typically larger than 8 inches in diameter.

“Offsite Waterline” A water line beyond project boundaries connecting the water lines with the City’s system.

“Plans” Drawings of water pipeline, reservoirs.

“Pressure Zone” The culinary water pressure zone within the City system as defined by an upper and lower elevation.

“Public Works Department” The City department responsible for operations and maintenance of the City’s culinary water system.

"Required" Unless specifically otherwise indicated, this shall mean a requirement of the City Engineer.

"Required Fire Flow" A requirement established for each project as determined by the South Jordan City Fire Department using International Fire Code (IFC) guidelines.

"Secondary Water" Water used for irrigation purposes within the City within a separate secondary water system.

"Service Lines" The line between the distribution pipeline and the culinary water meter within the public right-of-way.

"Service Zone" See pressure zone.

"Sewer or Sewerage" Wastewater main or wastewater.

"Staff Engineer" An engineer employed by the City and designated by the City Engineer to act on the City's behalf.

"Standard Drawing" Where not specified to the contrary, this refers to standard drawings attached to these standards.

"Subdivision Water Lines" The system of street water lines and service lines constructed by the developer within an approved subdivision.

"Water Purveyor" Agency or company supplying water.

3.1.4 APPLICABLE CODES AND POLICY

Ordinances, requirements and applicable standards of governmental agencies having jurisdiction within the City's service area shall be observed in the design and construction of water systems. Such requirements include but are not limited to current revisions of the following:

1. The International Plumbing Code as amended by the Building Department, South Jordan City, Utah.
2. Municipal Code of South Jordan City
3. Road encroachment regulations of South Jordan City, State of Utah, and Salt Lake County, as applicable.
4. Standard Specifications - American Public Works Association, State of Utah Chapter, Standard Specifications, current Edition.
5. American Water Works Association.
6. International Building Code (IBC)

A complete listing of all reference material is included in the back of these standards.

3.1.5 GENERAL METER POLICY

Unless otherwise approved by the City Engineer, a separate culinary water meter shall be installed for each individual owner. Therefore, each unit of a townhouse or condominium with separate ownership will have its own culinary water meter. A single ownership apartment building can have one meter for the building.

3.1.6 ENGINEERING DEPARTMENT JURISDICTION

The Engineering Department is responsible for the approval of plans and inspection of all public water lines and service lines, within the public right-of-way and parking lots of the City's culinary water service area.

3.1.7 PUBLIC WORKS DEPARTMENT JURISDICTION

The Public Works Department is responsible for the operation and maintenance of all public main water lines and service lines, within the public right-of-way of the City's water service area. Where repairs or replacement of a service line on the City side of the meter are required subsequent to initial construction, it shall be the responsibility of the Public Works Department, except in the case of a service upgrade. In which case, the owner or customer will be billed for the work. Conversely, repairs or replacement on the customer side of the meter will generally be the responsibility of the property owner.

3.1.8 FIRE PROTECTION WITHIN CITY

Within South Jordan City, fire protection is provided by the South Jordan City Fire Department.

3.1.9 DEVELOPER ENGINEER'S RESPONSIBILITY

These standards establish uniform policies and procedures for the design and construction of the City culinary water system. They are not intended to be a substitute for engineering knowledge, judgment or experience. These procedures shall be reviewed by the developer's engineer and shall be applied as necessary to the project. Proposed deviations to these standards shall be submitted in writing, prior to preliminary plat and or development project approval.

It is the developer engineer's responsibility to be aware of the City's Culinary Water System Master Plan for water system improvements and to indicate any main line relocations, extensions or over-sizing on the preliminary subdivision plat. A complete version of the master plan is available for review at the City's Engineering Department. This responsibility shall include investigating any changes from the Master Plan necessitated by development subsequent to the Master Plan, although the above shall not relieve the developer from the responsibility to provide an approved system consistent with Engineering Department requirements. Verification of the adequacy of the surrounding water system rests jointly with the Engineering Department and the developer.

All plans, specifications, reports or documents shall be signed and stamped by a registered professional engineer seal. A wet stamp is required on all documents except reproducible plans, where a stamp on the original is acceptable.

A preliminary review and or signature of the City on the plans do not in any way relieve the developer's engineer of the responsibility to meet all requirements of the City. The plans shall be revised or supplemented at any time it is determined that the City's requirements have not been met. Generally, plans that are signed as being authorized for construction will not require revisions based upon subsequent revisions to these standards, however, when in the Engineering Department's opinion, a change to the project is necessary, based upon a significant change in the standards, which significantly affects public safety, future maintenance costs, or similar concerns, such a change may be required during construction by the City Engineer.

3.1.10 REFERENCED SPECIFICATIONS

References to standards such as AWWA, APWA – Utah Chapter, or ASTM shall refer to the latest edition or revision of such standards unless otherwise specified.

3.1.11 CITY ENGINEER ACCEPTANCE

The City Engineer will not accept the culinary water system until all applicable requirements of these standards and of the South Jordan City Municipal Code have been met.

3.1.12 METRIC UNITS

The City uses Standard English units; therefore these standards do not contain metric conversions because of the extent of numerical data or information.

3.1.13 REQUIREMENTS FOR FINAL ACCEPTANCE

A. GENERAL

"Acceptance" of a project by the City occurs in several stages. In this regard there are several appropriate terms:

"Partial Field Acceptance for Occupancy Clearance Purposes". This may be given when occupancy is requested for certain units with a development project where the entire water system is not to a state of completion where it could be termed field accepted. In no event can occupancy clearances be given where satisfactory service cannot be assured. Also, clearance for occupancy does not imply that the City has waived any right to insist on repairs or corrections of punch list items subsequently identified in a final inspection of the entire water system.

"Field Acceptance". This is the term when the Engineering Inspector and Public Services Director (or his representative) jointly inspect the project and agree that all requirements as shown on the approved drawings and as specified in these Standards have been met.

"Final Acceptance". This is the term when the City Engineer formally accepts the water system.

B. FIELD ACCEPTANCE

After satisfactory completion of the improvements, the Engineering inspector will provide a field acceptance letter to the City Engineer. However, it shall be the developer's responsibility to initiate action and to supply the required administrative items prior to official City Engineer acceptance of the improvements.

C. "AS-BUILT DRAWINGS" ORIGINALS

Original "As-built Drawings" in the form of a PDF file and a .dxf file shall be submitted to the Engineering Department. The "As-built Drawings" shall reflect the actual improvements made and give the accurate location of all new/or relocated facilities. The following certificate shall be signed and shall appear on the cover sheet of the culinary water plans:

"As-built Drawings" Certificate

I hereby certify that the work shown on Drawing No._____, Sheets ____ through_____ marked "As-built Drawings" has been constructed in conformance with lines and grades and requirements as shown on said plans, drawings and referred specifications.

Registered Civil Engineer R.C.E Number Date

It should be emphasized that the responsibility for accurate record drawings must involve active participation by the developer's engineer during the project. All changes, whether done through the formal change order or revision process or whether done as a field adjustment should be reflected on the record drawings.

D. ITEMIZED COST/ADDITIONAL FEES

A certified and itemized copy of the cost of the facilities offered for dedication shall be sub mitted. Such certification shall consist of copies of the signed contractual agreement with any change orders. If the final cost is found to be more than the originally approved engineer's cost estimate, developer shall pay the City an additional amount of plan check fee and inspection fee, based on the difference between the estimate and the final cost, and based on the current rates of such fees.

E. OTHER ADMINISTRATIVE ITEMS/INCLUDING EASEMENTS

Depending upon the project, there can be other administrative items required before final acceptance. Examples are unpaid invoices, contractual requirements involving easements, etc.

F. APPROVAL FOR ACCEPTANCE

When all requirements (field and administrative) have been met, staff will prepare a notice of acceptance of the improvements and exoneration of the performance and labor and

material bonds (10 percent of the bonds remains in force until it is fully exonerated; generally this is for the two-year maintenance and guarantee period). The South Jordan City Municipal Code contains additional requirements for final acceptance.

Whereas, the normal maintenance and guarantee period is two year and the bond retention is 10% of the final cost of construction; both of these may be increased if in the opinion of the Engineering Department the normal period and amount are not sufficient.

G. STATUS DURING MAINTENANCE AND WARRANTY PERIOD

The developer/contractor is responsible during the warranty period for the proper performance and maintenance of the water system and for material and workmanship defects. Should City crews have to perform any work to correct these items, the costs may be invoiced to the developer/contractor.

H. EXONERATION OF BOND

Ninety percent (90%) of the final cost of the development will normally be exonerated upon acceptance by the City Engineer. Ten percent (10%) will be retained for the one year warranty period and then released.

SECTION 3.2

DESIGN CRITERIA

3.2.1 CITY WATER SYSTEM

A. General. South Jordan City is the only water provider within South Jordan City. The City's service area generally includes the region west of US Interstate 15 (1-15) to U-111 and between 9400 South and 11800 South and coincides with the City's boundaries. A map showing the service area is contained in the master plan document.

The City's Engineering Department is responsible for all studies, design and construction for these facilities and the Public Works Department is responsible for all operations and maintenance of the culinary water facilities.

B. Jordan Valley Water Conservancy District (JVWCD). All culinary water supplied to the City's distribution system is purchased from the Jordan Valley Water Conservancy District (JVWCD).

C. System Description. It should be noted that the City has a complete master plan for its culinary water system which recommends a number of capital improvement projects be built as well as operational changes made to this system. As certain projects are constructed, the operation of the water system will change including the consolidation of water service zones and the reduction of pressures. As design of water systems is anticipated, every effort needs to be made to coordinate efforts with the Engineering Department to ensure present water system requirements are met as well as providing for the future configuration of the water system. The latest version of the master plan should always be considered, and discussed with the engineering department.

3.2.2 WATER MAIN PRESSURES, CAPACITIES AND SIZES

A. Quantity of Flow. For a residential project, the quantity of flow should be derived from the state code values and either the known number of units or an estimated number of units based upon the particular zoning for the area. In this regard, the South Jordan City Community Development Department should be consulted. In general, estimates based upon rough approximations using ground slope are not approved because they can be very misleading.

An alternative method for quantity of flow projects involving commercial, industrial, greenbelt areas or schools, etc. The preferable method is to estimate the flow requirements for each building or area and then combine the results. AWWA and the Uniform Plumbing Code can be useful tools for this work.

B. Fire Flow Requirements. South Jordan City generally follows the requirements of the International Fire Code (IFC) as might be modified upwards by the South Jordan Fire Department, which provides fire protection service within the City.

It is the developer's responsibility to demonstrate through calculations that the required fire flow can be met while the City's water system is under a maximum day demand. The calculations shall assume that fire flow is achieved from storage not relying on pumping stations. Under fire flow conditions including the maximum daily requirement, the residual pressure in the system shall be no less than 25 psi. The only exception is for a fire hydrant located adjacent to or near a reservoir when there are no domestic water services between the fire hydrant and the reservoir or where it can be determined that residual pressures less than 25 psi will not adversely impact domestic customers. In making the calculation, the City mains must be considered with respect to their head loss.

Computer analysis is required on all development submittals. It is the developer's responsibility to provide said analyses stamped by a professional engineer.

C. Pressure. Water mains shall be designed to provide for service pressures between 55 psi and 110 psi with the following provisions:

1. Service pressure shall mean the pressure at the house or building and shall be interpreted to be the static pressure available with the service reservoir at no more than one-half full.

2. Where pressures exceed 135 psi, special approval is required and installation of separate pressure regulators ahead of the meters or a pressure regulating station on the main line.

3. Dynamic pressure within any portion of the pipe network to not drop below 25 psi at any time.

4. For all pipe networks where the source node pressure is less than or equal to 50 psi, demonstrate that the proposed pipe network friction losses do not exceed 10 psi as compared to the City provided source node pressure.

5. For all pipe networks where the source node pressure is greater than 50 psi demonstrate that the proposed pipe network friction losses do not exceed 10 psi, as compared to the City provided source node pressure.

6. Some developments may be required to install pressure regulators when bordering another pressure zone boundary.

D. Velocity. Water mains shall be designed to provide a mean velocity not more than 7 feet per second under peak day or peak instantaneous flow conditions.

E. Hydraulics. Each development will be required to provide a hydraulic flow model for the development under consideration. This hydraulic model must be compiled in a data format compatible with EPANET or WaterCAD. In order to obtain the software, please access one of the two resources below:

1) This software is available online at the following URL: http://www.epa.gov/ORD/NRMRL/wswrd/epanet.html

2) The software is also available on CD from the South Jordan City Engineering Department at a fee.

F. Sizing of Mains. Water mains shall be a minimum of 8 inches in diameter. Fire hydrant runs serving one fire hydrant are to be included in this category.

G. Pipe Networks. The City requires the use of "looped" pipe systems unless otherwise approved by City Engineer. A water main more than 400' long shall be looped. Not more than two (2) hydrants can be out of service due to a single main break. Two sources of supply are required whenever there are two (2) or more fire hydrants installed on a single system

3.2.3 SELECTION OF PIPE TYPES AND CLASS

A. General. These standards cover main lines up to and including 12 inches in diameter. Pipes larger than 12 inches in diameter shall meet with approval from the City Engineer. HDPE can be used on approval of City Engineer.

B. Main Pipelines. In general, main lines shall be either polyvinyl chloride (PVC), for pipes 8" to 12". HDPE may be used for borings upon approval of City Engineer. See AWWA.

C. Service Lines. These shall be $^3/_4$", 1, 1 ½ , and 2 inch or larger. Service lines less than 2 inches type IPS Poly is approved as described in later sections of this document. Larger service lines shall be PVC pipe. Service lines shall be capable of taking pressure up to the same level as the main line. Service laterals will not be allowed on water mains larger than 14 inch unless approved by the City Engineer and the Public Works Department.

3.2.4 LOCATION OF LINES AND FIRE HYDRANTS (Streets)

A. Water Mains. The water centerline shall be located in the road way, between curb to curb, within the north/east shoulder of the road. In case of utility conflicts, any proposed change to the water main location must be approved by the City Engineer. Separation requirements between any wastewater, storm lines and water lines are listed below.

The maximum depth of culinary water lines shall be 5 feet deep and the minimum is 4 feet, unless otherwise approved by the City Engineer.

When protection of the water line is considered, the minimum vertical distance of 18 inches must be maintained when the water line is installed over the sewer/storm line. If this distance cannot be maintained because of physical obstructions or the water line must be placed under the sewer/storm line, the sewer/storm line must be constructed with any of the following:

A) Extra heavy cast iron or ductile iron pipe.
B) Encasement with 4 inches minimum of concrete or sleeving with water quality pipe.

Each of these provisions must be extended for 10 feet on either side of the water line at 90 degrees to the crossing.

Special care is required where storm drains or other pipes cross above flexible pipes to avoid deflection problems when other lines are installed. No joints are allowed in the water pipe within 10 feet of such a crossing.

Sewer and other pollution sources which are parallel with water lines shall have a minimum separation of 10 feet horizontal, at points where water and sewer lines cross a minimum vertical separation of 18 inches is required.

When an area outside the tract or development project area can be logically served by extension of the water main in future streets or easements, the pipeline shall extend to the subdivision/project boundary or to the end of a paved street in a manner facilitating future extensions.

B. Fire Hydrants. Fire hydrants are generally located by the South Jordan City Fire and Engineering Departments. The Engineering Department does recommend that where possible a fire hydrant location correspond to that required for a blowoff structure. That is because a fire hydrant will serve as a blowoff and is easy to locate.

C. Not more than two (2) hydrants can be out of service due to a single main break. Two sources of supply are required whenever there are two (2) or more fire hydrants installed on a single system

The South Jordan City Fire and Engineering Departments use the following criteria to locate fire hydrants:

Type of Construction	**Fire Hydrant Spacing**
Residential single family dwelling, duplex	500 feet
Commercial & apartments	400 feet

NOTE: Fire hydrant shall be no further than 150 feet + from furthest corner of any building site. Plans are to be reviewed by Fire Department to determine fire hydrant placement. Fire hydrants shall be located a minimum of 2.0 feet behind the face of any curb as shown on Standard Drawings. In residential areas the hydrant should be placed at an intersecting lot line.

D. Criteria for the Separation of Water Mains and Waste Water (Sewer) Lines:

1. General. Proper separation of wastewater and water systems is necessary to reduce the potential for an outbreak of waterborne diseases.

2. Basic Separation Standards. The AWWA or Utah State Code R309-550-7 has set forth specific standards for the separation of water lines from other utilities. When water mains and sanitary sewers are not adequately separated, the potential for contamination of the water supply increases. Therefore, when adequate physical separation cannot be attained an increase in the factor of safety should be provided by increasing the structural integrity of both the pipe materials and joints. See Utah State Code R309-550-7 for additional information on basic separation standards.

3. Exceptions to Basic Separation Standards. Exceptions must be approved by City Engineer.

4. Special Provisions. See Utah State Code R309-550-7(3) for a list of special provisions.

E. Surface Water Crossings:

1. General. Surface water crossings, whether over or under water, should be consulted with City Engineer and the Division of Drinking Water before final plans are prepared.

2. Basic Separation.
    a. Culinary Water Pipe Above Surface Water Pipe.
        i. The pipe shall be adequately supported and anchored, protected from damage and freezing, and accessible for repair or replacement.

    b. Culinary Water Pipe Below Surface Water Pipe.
        i. A minimum cover of 2 feet or greater, as local conditions may dictate, shall be provided over the pipe.

        ii. When crossing water courses that are greater than 15 feet in width, the following shall be provided:
            - Pipe with joints shall be of special construction, having restrained joints for joints within the surface water course and flexible restrained joints at both edges of the water course.
            - Isolating valves shall be provided on both sides of the water crossing at locations not subject to high ground water or flooding, so that the section can be isolated for testing or repair.
            - A means shall be provided, such as a sampling tap, not subject to flooding, to allow for representative water quality testing on the upstream and downstream side of the crossing.
            - A means shall be provided to pressure test the underground water crossing pipe.

3.2.5 LOCATION OF WATER LINES (EASEMENTS)

Installation of culinary water lines within easements should be avoided where a reasonable alternate solution exists. Unless there are either physical limitations or extreme economic penalties, water lines should be installed within street right of way. Another acceptable instance would be where a looped system of benefit to a particular zone can be gained through the use of an easement. When easements are required, there shall be careful consideration of how the line is to be maintained and/or replaced, if necessary. Where easements are necessary and where the side slope (perpendicular to the pipe) exceeds 25 percent (1 vertical to 4 horizontal) then the plans shall clearly indicate appropriate contours within the easement.

In general, the line within an easement shall be accessible by conventional maintenance vehicles traveling over paved roads or driveways unless otherwise approved.

Service lines should not be connected to a main line within an easement unless specifically approved.

A. Width. Water easements for pipes up to 18 inches in diameter should normally be a minimum of 15 feet wide. However, additional easement width shall be required where the depths of pipe are excessive or where deemed necessary. The plans should clearly indicate any known block walls, pavement, trees or other obstructions within a proposed easement. Such items are contrary to Engineering Department policy and require special approval. Included with such approval may be a monetary obligation towards the operation and maintenance of the water line within the easement; also, the "as-built" drawings shall indicate such approval and such installations.

B. Pipeline Location. Pipelines shall generally be placed in the center of easements; only in unusual circumstances will a line be approved which is closer than 5 feet from the easement edge. Unless specifically otherwise approved, the line shall be straight without horizontal bends or deflections.

3.2.6 DEPTH OF WATER MAINS

The standard minimum depth of cover to the top of the pipe is 4 feet for all water lines. The standard maximum depth of cover to the top of pipe is 5 feet for all water lines, unless approved by the City Engineer prior to construction.

In achieving the above depths it must be recognized that numerous grade changes to achieve 48 inch depths of cover are not desirable and the designer shall blend the requirement for a reasonably straight pipeline with those for a relatively uniform depth.

Increases in depth may be required where future road improvements could potentially remove some of the existing cover or where there are other conflicting utilities. Pipelines placed in open, unpaved terrain shall generally have a minimum cover of 4 feet minimum.

3.2.7 LOCATION AND SIZE OF VALVES

Valves shall be located at locations allowing for the isolation of particular pipe segments in the event repairs or replacements are needed. In general, all branches at major intersections shall be valved unless otherwise approved. Further, branches at minor intersections shall be valved when necessary to facilitate future repairs without causing multiple streets to be without water.

Sufficient number of valves shall be provided on water mains so that inconvenience and sanitary hazards will be minimized during repairs. Valves shall be located at not more than 500 foot intervals in commercial districts and at not more than one block or 800 foot intervals in other districts. Where systems serve widely scattered customers and where future development is not expected, the valve spacing shall not exceed one mile.

See these City Standards and Specifications and Utah State Code R309-550-5(8) for valve location and size. All pipeline valves shall be the same nominal size as the pipeline.

3.2.8 AIR AND VACUUM ASSEMBLIES

A. Types of Valves.
   1. Low profile "combination air release valves" combine both the air release and air & vacuum valves as described above and it is this type of valve, which is generally specified in the City system.
   2. See standard drawings.

B. Location. Combination air release valves shall be located at all significant high points along the pipeline and in locations where air may become trapped or as approved or required by the Engineering Department. Where feasible the slope of the waterline shall be adjusted to place the high point and air release valve on a lot line, rather than matching the high point of the street centerline.

C. Sizing. In order to somewhat simplify the selection of the combination air release valves, the following is provided as guidelines for determining the size:

   1. Determine the maximum rate of flow which can occur in the line:

Rate in CFS = Q (gpm) under filling conditions
= 7.48 gallons/cu.ft

Rate in CFS = 0.087 (SD5)(1/2) under draining conditions

S = Slope or gradient (ft. per foot)
D = Diameter of pipe in inches

2. Using the value in "1" above, the size should be:

CFS Rate	Valve Size
0-5	1”
5-15	2”

3. For most installations involving 8 inch pipelines, the valve will be 1 inch size.

4. For steel pipelines a further consideration is the collapsing pressure and the designer should investigate this in accordance with manufacturer instructions.

3.2.9 BLOWOFF ASSEMBLIES

A. General. Blowoff assemblies are placed at low spots in the line to facilitate line drainage and to allow the removal of sediments which accumulate in low areas of the pipeline. See Standard Drawings. Also, fire hydrants perform the same functions as a blowoff and therefore can be substituted for them. Providing a bottom outlet tee, used to connect to the main line. Design Engineers are encouraged to avoid blowoffs by utilizing fire hydrants.

   On dead end lines (i.e., cul-de-sacs and future stubs) where there is not a fire hydrant at the end of the line, the engineer should specify the construction of a blowoff valve to drain and clear the line. An air release valve should be used in place of a blowoff if the end of the line is significantly higher than the intersecting main line.

B. Sizing. Blowoffs should be sized according to the following criteria:

   1. The particular section of pipeline should be capable of being drained within 2-4 hours.

   2. The blowoff should be capable of creating a minimum velocity of 2.5 fps in the pipeline for the removal of sediments.

3.2.10 DESIGN FOR PROPER FLUSHING

Proper flushing of water mains and the prevention of sediment buildup are important aspects of the City's maintenance program. Therefore, the following should be considered:

1. Unnecessary intermediate low points in the lines should be eliminated wherever possible to prevent spots for sediment accumulation.

2. The flushing techniques mentioned in this guide should be followed.

3. Any new waterlines shall be flushed in accordance with AWWA before connecting to existing system.

3.2.11 HORIZONTAL AND VERTICAL CURVES

In curved streets, the water line shall generally follow the street curvature. Joint deflections shall not **be allowed.** ~~exceed 1% or manufacturer's recommendations, which ever is more stringent.~~ No pipe bending allowed. Where there is a grade break, ~~exceeding the allowable deflections in a coupling or joint, then~~ appropriate fittings will be required. ~~or a vertical curve should be used in lieu of the grade break.~~

~~If~~ **C**hanges in grade or alignment ~~cannot~~ **must** be accomplished **through the use of** ~~joint deflections, then~~ standard fittings, ~~are~~ available with bends of 90, 45, 22-1/2 or 11-1/4 degrees.

3.2.12 PROPER SIZING OF WATER METERS AND SERVICE LINES

A. General. The American Water Works Association (AWWA) publishes excellent references for discussion of water meter sizing.

B. Meter Sizing. Water meters are designed to deliver a maximum flow for short periods of time with a lower flow capacity for sustained usage without damage or above-normal wear occurring to the meter. The selection of the type and size of the meter should be based only on the flow requirement and the type of use not on the pressure loss through the meter.

   If there is a known expansion program or increased meter usage can be anticipated in the future, then provision should be made for larger facilities in the future. When this occurs, the meter should be installed for the needs at the time but also with a meter box and connections that are adequate for future requirements.

   The Engineering Department in collaboration with the Public Works Department will approve the meter type.

C. Service Line Sizing. Proper service line sizing is a function of the maximum anticipated flow rates and the allowable pressure loss for adequate pressure. If pressure to the structure is questionable or if flows are anticipated to increase in the future, it is better to oversize the service line than to oversize the meter. The service size from the main to the meter will be the same size as the meter. Any upsizing of the water service, after the service and meter have already been installed, must take place on the home / business side of the water barrel. No bushings are allowed on the water meter setter or the saddle.

3.2.13 LOCATION OF METER BOXES, FIRE HYDRANTS, AND COMBINATION AIR RELEASE ASSEMBLIES

A. Meter Boxes. These shall be located as shown on the Standard Drawings; these shall be kept out of any driveways, walkways or any other hard surfaces (2 feet minimum separation unless approved by the City Engineer). On a case by case basis City Engineer may approve water meters located within hard surfaces, however, a meter vault may be required with a manhole style lid. Water meters shall be centered on the front of the lot or up to 10 feet off center towards the downhill side of the lot in order to accommodate the driveway location on the uphill side of a residential lot. Water meters shall be located in the park strip. The contractor shall place a brass

disk in the top back of the curb at the locations of the house services. Stamped “W” for culinary water. The disks are supplied and installed by the contractor. No obstruction, fixed object, tree, above ground utility, AC unit or similar may be installed within 5 feet of a water meter barrel.

B. Fire Hydrants. These shall be located at least 2 feet (0.6 m) behind the curb, and 5 feet from any obstruction.

C. Combination Air Release Assemblies. Locate these with particular attention to minimize the visual impact by locating them near property lines rather than in the middle of the front yard area.

D. Policy on Irrigation Meters. Where the parkways or side landscaping strips along streets are to be irrigated, a separate meter must be installed on each side of the street. In such cases, running an irrigation line from the meter to the other side of the street is not allowed.

E. Moving Existing Water Meters. When warranted by site conditions, a water meter location MAY be moved on a case-by-case basis, as approved by the City Engineer or his/her designee. The following conditions and standards shall apply:

1. Where the water main is located in the park strip on the side of the street where the meter is to be relocated.

    a. The existing service line shall be abandoned at the water main and a new service shall be tapped at the water main perpendicular to where the meter is to be located.

2. Where the water main is located in the street or in the park strip across the street from where the meter is to be relocated.

    a. The meter may be moved without having a new service tap and the existing meter being abandoned at the main.

    b. The water line service on the “STREET SIDE” of the new relocated meter will be permitted to tie back into the original water service line placed from the water main to the original meter location. As a part of the encroachment permit, the City will survey this newly installed water service line. Until the City Inspector has passed the installation and surveyed the line, it cannot be backfilled.

3. In both conditions 1 and 2 above, a new water line service shall be constructed from the “HOME SIDE” of the new relocated meter to the house in a straight line with no fittings. As a part of the encroachment permit, the City will verify and

survey this newly installed water service line. Until the City Inspector has passed the installation and surveyed the line, it cannot be backfilled.

4. Contractor will obtain an encroachment permit and pay the fee associated with the permit.

5. Tracer wire must be placed over the water service.

6. The contractor shall place two brass disk markers in the top back of the curb, one at the original location of the water meter and the other at the new location. Stamped "W" for culinary water. The disks are supplied and installed by the contractor.

7. Only solid Insta-tight by Insta-tight fittings will be used, no threads.

8. No crimping of the service line will be allowed.

F. Commercial Landscape Meters. All commercial development is required to install a separate landscape meter.
Where a median strip must be irrigated, the meter may either be in the side parkway or in the median strip, providing that at either location the meter is easily accessible and protected from being covered by landscape materials or other obstructions. The Engineering Department reserves the right to select all meter locations.

3.2.14 STRUCTURAL REQUIREMENTS

A. Under Roads. All structures and pipe placed under public roads shall be of sufficient strength to support with an adequate factor of safety the backfill, road surfacing and loading per AASHTO Standard Specifications (truck loading with impact). Higher loading can be specified by the Engineering Department or as required by design.

B. Other Pipes and Structures. Water lines designed to cross under or over other pipes or structures shall be protected from damage and shall be constructed to prevent endangering the other pipe or structure. In this regard, particular attention should be given to the possibility and prevention of settlement caused damage. Also, where future replacement of any line may be extremely difficult due to the pipe or structure, special design consideration may be required. Any of the standard drawings, which detail various encasements or other protection, may be required in such instances.

C. Flexible Joints. Flexible joints, which will allow for differential settlements or other movement of water pipe lines or structures, adjacent pipe and adjacent structures, shall be provided where waterlines enter encasements or other structures. Flexible joints shall be within a minimum of 24 inches (600 mm) of such structure unless otherwise approved.

D. Thrust Blocks. Sized per APWA, restrained with MegaLug followers or equivalent and thrust blocks unless otherwise approved. These are required in the following locations:

1. At abrupt changes in grade or alignment requiring tees or elbows.
2. At changes in pipe size.
3. At dead ends of lines.
4. At locations subject to sudden thrust, such as valves and hydrants.

E. Steep Grades. Water lines laid on grades steeper than 8 percent which are not under nor intended to be under pavement should be examined for possible erosion protection. Where the slope exceeds 35 percent (1.43 horizontal to vertical) a redwood check dam (See Standard Drawings) shall be installed across the trench line at 20 foot intervals to reduce erosion.

Slopes above 35 percent (1.43 horizontal to 1 vertical) shall require sand \ cement bags be placed along the trench line at the intervals specified in the Standard Drawings to reduce the flow of water within the pipe trench.

Where steep grades are present welded pipe or joint pipe may be required.

3.2.15 FIRE SERVICE LINES

A. Above ground assemblies must be adequately treated to prevent freezing, depending on where Post Indicator Valve (PIV) and Wall Indicator Valve (WIV) are.

B. All underground fire lines that service automatic fire sprinkler systems shall be no smaller than six (6) inches in diameter and have a PIV between the water main and the building. If a PIV isn't feasible due to site constraints, a WIV may be used with the approval of the City Engineer or Fire Code Official. For a WIV to be allowed, another valve must be installed on the fire service line back at the connection to the water main, which will be maintained by the City as part of its culinary water system. All fire line material shall be ductile iron (ductile iron from the PIV to the building or ductile iron from the water main to the WIV). **Ductile iron fire lines are to be maintained by the property owner.**

C. Post Indicator Valves (PIV) shall be between 6 and 40 feet from buildings not exceeding three stories or equivalent in height and between 30 and 40 feet on buildings in excess of three or more stories in height or equivalent. The fire lines should be ductile iron pipe from PIV to building. Above ground assemblies must be adequately treated to prevent freezing, depending on where PIV and WIV are.

SECTION 3.3

MATERIALS

3.3.1 GENERAL REQUIREMENTS

This section discusses the materials involved in culinary water pipeline systems and associated construction activities. The materials selected have been chosen for their strength, durability and ease of maintenance. All materials, unless specifically approved otherwise, shall be new and unused. All water facility construction materials used must be as listed on the South Jordan City pre-approved materials and manufacturers listing for new facilities, latest revision or specifically approved on the plans.

Where applicable, American Water Works Association (AWWA), APWA or other standards have been referenced and it shall be the responsibility of the developer/engineer/contractor to be familiar with those standards to insure compliance.

In some instances, particular manufacturers and product names have been mentioned as being approved. Other products may also meet the requirements, but must be first approved in writing by the Engineering Department. One factor, which may be considered by the Engineering Department in any consideration of other products, is the need for standardization.
If at any time the Engineering Department believes that the use of a specific product must either be halted or changed, the City Engineer has the authority to make the change.

3.3.2 TESTING AND FINAL ACCEPTABILITY OF MATERIAL

The Engineering Department shall require such tests and certifications as deemed necessary to show that the specified materials have been employed. Notwithstanding prior factory or yard inspections, the City Engineer and Public Works Department shall have the right to reject any damaged or defective materials found on the job, and order its removal from the site.

3.3.3 MAIN LINE PIPE MATERIALS

A. PVC Pipe - All materials which may contact drinking water, including plastic pipes, gaskets, lubricants and O-rings shall be ANSI - certified as meeting the requirements of NSF Standard 61, Drinking Water System Components. All pertinent water system components should be appropriately stamped with the NSF logo for field verification.

1. Pipe. PVC pipe shall conform to the quality and strength requirements of AWWA C900, which covers PVC (polyvinyl chloride) pipe in size 4-12 inches. *Each* length of pipe shall be clearly marked with the following:

    a. Nominal size and O.D. base, i.e., 6 inch cast iron pipe size
    b. Material code "PVC 1120"
    c. Dimensional ratio, i.e., DR 25 where DR is equal to thickness "divided by" diameter. City requires DR18 unless approved by City Engineer.
    d. AWWA Pressure class, i.e., PC 150, minimum
    e. AWWA designation "AWWA C900"

f. Manufacturer's trade name and production record code
g. Seal (mark) of testing agency

The standard laying length shall be 20 feet (plus or minus) two feet in all classes and sizes. A maximum of 15 percent may be furnished in random lengths of not less than 3 feet each (minimum).

One gasket shall be furnished with each length of elastomeric-gasket bell-end pipe and two gaskets shall be furnished with each coupling where couplings are used.

Pipe surfaces shall be free from nicks, scratches, and other blemishes. The joining surfaces of pipe spigots and of integral bell and sleeve reinforced bell sockets shall be free from gouges or other imperfections that might cause leakage. "Sunburned" or "faded" pipe due to environmental factors is not acceptable; determination is to be made by the City Engineer or designee.

2. Joint Mechanisms. The joints shall be any of the following:

   a. Integral Wall - Thickened bell end (bell and spigot with rubber gasket)
   b. Integral sleeve reinforced bell end
   c. Elastomeric gasket couplings

   PVC solvent cement joints, although allowed by AWWA are not approved.

3. Couplings and Fittings. Where couplings are used, they shall meet the requirements of AWWA. Couplings shall be as furnished by the manufacturer. Couplings shall be marked with same information as the pipe. Double Band Brass saddles only, no direct tap. Megalug following ring or an approved equivalent shall be used on all fittings.

   Cast or ductile iron fittings can be used with PVC; this is discussed in a later section.

4. Electrically Bonded Connections.
   As approved by the City Engineer.

5. Factory Tests and Inspection. All materials shall be inspected and tested in a normal air-dry condition by the manufacturer prior to shipment for conformance to the stated requirements. The Engineering Department shall at all times have the right to inspect the work and materials in the course of manufacture and to make or witness such tests as required in these specifications, or as deemed advisable, in lieu of the preceding, the manufacturer shall upon request submit a certificate certifying that the materials meet the requirements of this specification. All testing will be done in recognized testing laboratories within the State of Utah approved by the City Engineer.

B. Ductile Iron Pipe. - **Not allowed. Unless approved by the City Engineer.** The City will only consider the use of this pipe type for pipelines 14 inches or larger and which meet the following requirements:

1. Pipe. The pipe shall conform to AWWA for both quality and strength. Each pipe shall include the letters "DI" or word "DUCTILE" to indicate the pipe material. Pressure rating is 250 psi minimum.

2. Joints. These shall be of the rubber gasket push-on joint type conforming to the requirements of AWWA and being of the "tyton" type.

3. Fittings. All fittings shall conform to AWWA.

4. Lining and Coating. Unless otherwise approved, the internal surfaces shall be lined with a uniform thickness of cement mortar and then sealed with a bituminous coating in accordance with AWWA.

   The outside surface shall be protected with a polyethylene encasement furnished and installed in accordance with AWWA.

   Construction of this pipeline type may require full-time inspection from offloading of the material to completion of testing.

5. Cathodic protection may be required if deemed necessary by the City Engineer.

C. High Density Polyethylene Pipe. (*With approval of City Engineer*) - The City will only consider the use of this pipe type for pipelines 14 inches or larger and which meet the following requirements:

1. **Pipe.**
   Pipe 14-inch through 63-inch nominal diameter shall meet the requirements of AWWA C906.

   The high-density polyethylene pipe shall be manufactured by JM Eagle, WL Plastics Corp., or approved equal, and shall have a minimum pressure rating of 200 psi or as noted on the Contract Drawings. The HDPE pipe shall have designation of PE 4710 (IPS size), made from prime virgin resin with a minimum cell classification of PE 445574C or higher in accordance with ASTM F 714 and D 3350. The resin shall be listed by the Plastic Pipe Institute (PPI) in its pipe-grade registry Technical Report (TR) 4, "Listing of HDB/HDS/SDB/PDB/MRS for Thermoplastic Piping Materials or Pipe".

   The manufacturer shall comply with NSF Standard 14 and NSF 61 by certifying in writing to the design engineer and making the pipe with the NSF logo in the print line. The manufacturer shall comply with AWWA Standard C901 or C906 by certifying to the design engineer and marking the pipe with the appropriate AWWA standard in the print line.

   Pipe shall be marked per AWWA C901 or C906 and NSF. Pipe markings shall include nominal size, OD base, dimension ratio, pressure class, manufacturer's name, manufacturer's production code including day, month, and year extruded, and manufacturer's plant and extrusion line.

2. **Joints.**

Fusion Joining Requirements:

All HDPE pipes shall be joined to by the heat fusion process which produces homogeneous, sealed, leak-tight joints. Tie-ins between sections of HDPE pipe shall be made by butt fusion whenever possible.

Butt Fusion: The pipe shall be joined by the butt fusion procedure outlined in ASTM F2620 or PPI TR 33. All fusion joints shall be made in compliance with the pipe or fitting manufacturer's recommendations. Fusion joints shall be made by qualified fusion technicians per ASTM F 3190. A record or certificate of training for the fusion operator must be provided which documents training to the fundamentals of ASTM F2620. Considerations should be given to, and provisions made, for adverse weather conditions, such as temperatures below freezing, precipitation, or wind, which is accepted by OWNER and ENGINEER. The use of a controlled cooling cycle procedure to reduce cooling time is acceptable only as part of a controlled cooling cycle procedure where testing demonstrates that acceptable joints are produced using the controlled cooling cycle procedure.

Electrofusion: Electrofusion is not allowed.

Fusion Operators:

The employer of the fusion machine operator is responsible for the fusion joint quality of the fusion weld made by that individual. The employer is responsible for documenting all training and qualification records for that individual, including compliance with any code requirements for fusion/bonder operators.

All HDPE fusion equipment operators shall be qualified in the procedure used to perform pipe joining. Fusion equipment operators shall have current, formal training on all fusion equipment employed on the project. Training received more than two years prior to operation with no evidence of activity within the past 6 months shall not be considered current.

For Projects with at least 5,000 feet or with pipe larger than 24-inches diameter, operators or their supervisor must have a current training certificate for the equipment to be used on the project.

When the fusion machine operator is employed by the HDPE pipe and fusion machine supplier, the supplier shall maintain an ISO 9001 Certified Quality Management System.

Butt Fusion Equipment:

For 6-inch and larger pipe sizes, the pipe butt fusion machine shall be a self-contained hydraulic fusion machine capable of butt fusing HDPE pipe. The carriage must be removable from the chassis for in-ditch use. The machine must be compatible with an electronic data recording device. Accessories will include all butt fusion inserts for the specified range of pipe sizes, a pyrometer

kit for checking the surface temperature of the heater, extension cord of appropriate gauge (25 feet minimum), and hydraulic extension hoses (minimum of four). The butt fusion machine will be McElroy, or approved equivalent.

For 16-inch diameter and larger pipe sizes, the butt fusion machine shall be capable of autonomously calculating the drag pressure and perform the shift sequence autonomously. In areas where there may be insufficient space for layout of the entire length of fused pipe to be pulled-back, CONTRACTOR shall utilize a continuous HDPE pipe fusion equipment such as a PolyHorse by McElroy or other means to fuse the length of pipe necessary for the installation.

Fusion Data Recording:
For 6-inch and larger pipe sizes, McElroy DataLogger or equivalent fusion data recorder shall be used to record all fusion welds on hydraulically operated fusion machines. The device shall be capable of meeting the requirements of ASTM F3124. The device, or combination of devices, shall record the following variables of each fused joint:

a. Heater surface temperature- immediately before inserting the heater plate, measure with a pyrometer and manually enter into the weld record.

b. Gauge pressure during the initial heat cycle

c. Gauge pressure and elapsed time during the heat-soak cycle

d. Heater removal (dwell) time

e. Gauge pressure and elapsed time during the fusing/cool cycle

f. Drag pressure

g. Pipe diameter and wall thickness

h. Type of HDPE material (Specification and Classification) and manufacturer

i. Fusion Machine Identification

The device shall record the operator's name and a unique operator ID number, along with the date and time of each weld.

Records showing the device is up to date on all required calibration should be available for presentation when requested.

All fusion welds should be traceable to the report (via operator and weld ID) with an indentation weld stamp or by permanent paint marker/pen next to fusion weld. A weld location map may be requested, prior to commencement of work, by the OWNER or OWNER's representative.

3. **Fittings.**
   Fittings shall be pressure rated to match the system piping to which they are joined. At the point of fusion, the outside diameter and minimum wall thickness of the fitting shall meet the outside diameter and minimum wall thickness specifications of AWWA C901 or AWWA C906 for the same size of pipe.

4. **Anchor Walls.**
   Anchor walls are required and are to be designed for the length and size of the HDPE pipe used, by the design engineer, and approved by the City Engineer.

3.3.4 MAIN LINE FITTINGS

A. Ductile Iron Fittings. These fittings shall meet the requirements of AWWA. All fittings shall be rated for 250 psi. This standard covers, but is not limited to, fittings with combinations of ends including mechanical joints, and flange. The fitting types are as follows:

- 90, 45, 22-1/2, and 11-1/4 degree bends
- Tees and crosses, reducers, caps & plugs, connecting pieces, flanged bends, flanged tees and crosses, flanged reducers.

Bolt ends shall be coated with Poly FM grease and each fitting wrapped in 10 mil Polyethylene sheeting after installation.

B. Flanges, Bolts and Gaskets. They shall be flat-faced and meet the requirements of AWWA and should be AWWA standard steel hub flanges, Class E (275 psi) (these flanges meet ANSI). The flanges shall be marked with the size, name or trademark of manufacturer and with the AWWA class, i.e. "E".

- New bolts and nuts shall be zinc plated.
- New gaskets shall be of the drop-in gasket type, 1/8 inch thick.
- New flange connections shall comply with AWWA.

C. Mechanical Joint Fittings. This is a bolted joint of the stuffing box type. Each joint has a bell provided with an exterior flange having bolt holes or slots, and a socket with gaskets to receive the plain end of the pipe or fitting.
All mechanical joints shall be mega lug follower gland or approve equivalent and meet AWWA. That standard covers the joint as well as gaskets and bolts.

D. Flanged Coupling Adapters. These are used to connect plain end pipe to flanged valves, pumps, meters, etc. They eliminate the need for both a flanged spool and coupling. Generally, they are available in sizes through 12 inches. Submit material type to City Engineer for approval.

E. Plastic Film Wrap. This wrap shall be used around all buried valves, bolted flanges and other fittings.

The polyethylene film shall be 10 mils in thickness. The length shall be sufficient to firmly attach the film to the pipe on either side of the valve, flange or fitting. The following minimum flat sheet widths shall be used for the specified valve sizes:

Nominal Valve or Flange Size (inch)	Minimum Flat Sheet Width (inch)
4	24
6	24
8	24
10	30
12	36
16	48
18	48

At the contractor's option, tubular material may be purchased and cut with one side to fold out to the required width.

Tape for securing the polyethylene wrap shall be 2 inches wide adhesive tape such as Polyken No. 900 (Polyethylene), Scotchrap No. 5 (Polyvinyl), or approved equal. The tape shall be such that the adhesive will bond securely to both metal surfaces and polyethylene film.

3.3.5 SERVICE LINE MATERIALS AND FITTINGS

The materials covered in this section include the service line pipe, corp stop and saddles as well as the valves inside the meter box. Where specific manufacturers' products are listed, it should be understood that other products that are equivalent may be used if approved in writing. This section is written as if the minimum service line size is 3/4 inch. However, in certain low pressure areas 1 inch service lines, with approval, may be used. In those cases, the fittings shall be selected accordingly. All brass fittings must conform to the new no-lead rule.

A. Poly Pipe (IPS). This pipe material is approved for all service lines for ¾ inch to 2 inch service lines. It shall meet the requirements of AWWA. CTS pipe may be used for service lines larger than 1" with approval from the City Engineer. The pipe shall be marked with the following:

1. Nominal size
2. Material code; i.e., PE 3406 or PE 3408

3. On pipe, the dimension ratio
4. AWWA pressure class
5. AWWA designation AWWA
6. Manufacturer's name or trade mark
7. Seal of testing agency

Fittings shall have similar information on them. The symbol "NSF" means that it is approved for potable water systems by the National Sanitary Foundation.
The polyethylene shall be type "PE 3406" which is a high-density type. The pressure class shall be 160 psi for cases where the main line pipe is Class 150. The product is not approved where main line is above Class 150. For comparison purposes, the following dimensional ratios are provided:

Send manufactures specs to engineer to be approved. PE pipe shall use stainless steel liners or inserts connections to compression fittings.

B. Service Saddles. These shall be of the double strap brass type made of bronze with bronze nuts. The thread shall be corporation (or tapered thread). Submit specs for approval by City Engineer.

C. Corporation Stops. These shall be bronze with a corporation thread on the inlet side. One inch stops shall be standard type and 2 inch corporation stops shall be of the ball valve type. The outlet for the pipes shown below shall be as follows:

TABLE 3-10

Service Pipe	**Corp Stop Outlet**
¾ and 1 inch IPS-Poly	Insta-tight or Compression
1 ½ inch IPS-Poly (or CTS with approval)	Compression for IPS-Poly
2 inch IPS-Poly (or CTS with approval)	Compression for IPS-Poly

1. All services shall be same size as meter.
2. All services shall have tracer wire from the corp stop to the meter setter.
3. Compression fittings shall be Ford Quick Joints or Muller 110 Compression. Metal inserts are required for all compression fittings.

D. Angle Meter Stop. These shall be bronze and in the 1 inch size they shall be a standard angle meter stop. In a 2 inch size they shall be a flanged angle meter stop. Refer to the table below.

TABLE 3-11

Service Line	Angle Meter Stop	Inlet
3/4”	Standard Ball Style	Insta-tight or Compression
1”	Standard Ball Style	Insta-tight or Compression
1-1/2” or 2”	Flanged Angle Ball Style	Compression

1. Compression fittings shall be Ford Quick Joints or Muller 110 Compression. Metal inserts are required for all compression fittings.

3.3.6 METER BOXES AND VALVES

Meter boxes up to 36” diameter shall be HDPE material with a reading lid. Water Meter boxes shall be white on the inside. All water meter boxes shall be located outside of driveway and walkway areas, no concrete within 2’ of edge of lid unless approved by the City Engineer and exception is granted as outlined in section 3.2.13. Residential water meters are only allowed to be located in concrete with City Engineer approval, and must use a 24” meter box and a flat, traffic rated lid. Commercial meters are only allowed to be located in asphalt or concrete drive areas such as parking lots or approaches with City Engineer approval, and must be in an accessible vault with a 36” traffic rated manhole lid. All valves shall be located outside of driveways, gutters, curbs and alley gutters.

Meter boxes shall be sized according to the following:

Service Line Size (IPS)	Meter Box Diameter
¾”	21”
1”	24”
1 ½” – 2”	36”
2” <	see Standard Drawing 3100

3.3.7 WATER METERS

All water meters are to be a Badger Meter equipped with an Absolute digital Encoder with pit set 100W Itron ERT (Encoder Receiver Transmitter) module with remote antenna kit and comply with the no-lead rule. All meter lids need to be recessed for transmitter. The City will install residential and commercial meters. Commercial meters that require a vault will be installed by the contractor with an onsite City inspector present.

3.3.8 MAIN LINE VALVES

A. Butterfly Valves: Shall be used on pipelines greater than 12 inches.

1. General. Butterfly valves shall be Av-Tek DEX, Vag EKN or Mueller. Valves shall be tightly closing, rubber-seated valves conforming to AWWA. Valves must be Class 150-B designed for tight shut-off up to 150 psi. Valve disc shall rotate 90 degrees from fully open to tightly closed position.

2. Valve body. Shall be cast iron with integrally cast mechanical joints, ends for the pipe or flanged ends.

3. Valve operators. Shall be of the manual worm gear rated for the appropriate service conditions. Actuators shall be equipped with a 2 inch AWWA square operating nut. They shall be sealed and gasketed and lubricated for underground service. The actuator shall be capable of withstanding an input torque of 450 foot-pounds (ft.-lbs.) at extreme operator position without damage.

4. Painting. See Section 3.3.16.

5. Marking. The manufacturer shall show on the valve the valve size, manufacturer, class and year of manufacture.

6. Approved valves. Shall be AWWA approved valves.

7. All valves must be accessible with a 6 ft valve key.

8. Valve box to be in 4’x5’x6” concrete pad.

B. Resilient-Seated Gate Valves. This specification pertains to resilient-seated gate valves for underground service 3 inches to 12 inches in size where design-working pressures are less than 200 psi. Resilient-seated gate valves shall be Mueller or AFC. And shall generally be of the same size as the main in which they are installed. All such valves shall be of the non-rising stem type, with O-ring seal, equipped with 2 inch square operating nut, which shall turn to the left in a counter-clockwise direction to open the valve. Valve bodies and gates shall be manufactured of ductile iron with internal working parts machined from the grades of bronze specified in the AWWA. Alpha connections don’t require Mega Lugs.

C. Tapping Sleeves and Valves.

1. Tapping sleeves. Tapping sleeves shall be of high tensile cast iron construction specifically designed to withstand the strains and vibrations of the tapping machine, and shall be stainless steel with rubber gasket and flanged ends.

   The tapping sleeve must have gaskets at each end of the sleeve. Sleeves with only an O-ring around the tapped hole are not approved.

D. Valve Stacks and Covers. The valve stack shall be cast iron, 8 inches in diameter (See Standard Drawing No. 3040).

The valve box caps for culinary shall have "Water" cast into the metal lid. For secondary the lid shall be cast with symbolism for irrigation.

3.3.9 COMBINATION AIR RELEASE ASSEMBLIES

A. Metal Assembly. As discussed in Section 3.2.8, the combination air release assembly has both the features of an air release valve and an air and vacuum valve. Both units shall be housed in a cast iron body and all internal parts such as the float, bushings, level pins, seat and baffle shall be either stainless steel or brass as furnished by the manufacturer. All assemblies shall be rated at 300 psi maximum operating pressure.
The inlet threads shall be iron pipe threads of the same size as the valve.

B. Metal Housing or "Can". Shall be per Standard Drawing Nos. 3070 and 3075.

C. Ball Valves. 2 inches and smaller exposed with a female iron pipe thread on each end and tee head.

D. Guard Posts. See Section 3.3.17. Air vacs need "T" and ¾ reduce wire hose bed for sample.

3.3.10 BLOWOFF ASSEMBLIES

A. See Standard Drawings

3.3.11 FIRE HYDRANT ASSEMBLIES (SEE STANDARD DRAWINGS)

A. Hydrant Type. Fire hydrants for single family detached residential areas shall meet AWWA and have a 6 inch flanged inlet with two 2-1/2 inch and one 4 ½ inch valved outlets with National Standard fire hose threads. Fire hydrants for commercial and industrial projects and multiple dwelling areas shall have one 4 ½ inch and two 2-1/2 inch outlets. Where the required flow exceeds 3,000 gpm. The outlets shall be protected with caps attached to the hydrant head with a chain, other specific requirements are:

1. The hydrant upper portion (above ground) may consist of either one or two sections.
2. Hydrant materials are listed in AWWA.
3. Hydrants shall be designed for a minimum working pressure of 150 psi (per AWWA).

4. Hydrant flanges shall contain six equally spaced bolt holes of 7/8 inch diameter on a 9-3/8 inch diameter.
5. All hydrants shall be permanently marked with the manufacturer's name and the year of manufacture.
6. See standard drawings for location of auxiliary valve and hydrant.

Approved fire hydrant is the Mueller Super Centurian A-423 or Clow Medallion. Fire hydrant type and location are to be approved by the Fire Department and Public Services. Spacing for residential is 500' and for commercial is 400'.

B. Hydrant Lateral. Six (6) inch PVC pipe shall be used. Hydrant laterals shall be C900. See Section 3.3 for material specifications. Also see Section 3.3.4 for fittings description. Thrust block sizes are covered in Standard Drawings.

C. Hydrant Valve. Shall be a 6 inch valve (see Section 3.3.8) as shown in standard drawing for PVC pipe. The valve shall be stacked to the surface using materials discussed in Section 3.3.8.

D. Painting. See Section 3.3.16.

E. Bolts. Break away flange to attach the fire hydrant to the extension spool. Bolts are not to be located in concrete pad.

F. Mains to Fire Hydrants. Separate lines used only for fire hydrants shall be a minimum of 8 inches in diameter. Actual size to be determined by Engineering Department.

G. Hydrant base and auxiliary valve shall be placed in a 4'x5'x6" thick concrete pad, over 6" of road base.

3.3.12 PIPE TRENCH MATERIALS

Refer to Standard Drawings for trench cross section terminology. See also APWA current standards.

A. Within Pipe Zone. The pipe zone extends from 6 inches below pipe to 18 inches above the top of the pipe. The material within this zone shall be clean, well-graded imported sand, see APWA for correct material type. Warning tape and tracer wire shall be in the pipe zone. No chips are allowed within the pipe zone.

B. Above Pipe Zone. Material shall be A-1 to A-2-7, compacted to 96%.

C. Special Slurry Backfill. The Engineering Department may require the backfill above the pipe zone to be flowable fill per APWA.

D. References See AASHTO.

3.3.13 ROAD WAY MATERIALS

Pavement materials used for the resurfacing of trenches shall follow City standard detail #3010; aggregate base and subbase materials must meet City trench repair and base course requirements.

3.3.14 CONCRETE MATERIAL

Approved concrete material shall be based on the 28 day compressive design strength see APWA.

3.3.15 PAINTING

A. General. This section will only cover the paint materials. "Painting" as it relates to construction is discussed in Section 7.20. All paint colors shall be as specified or as selected by the Public Works Department. Paints shall be delivered to the job site in original, unopened cans or packages bearing the brand name and
manufacturer's name.

   Paints specified shall be used unless specific written approval is obtained in advance to use other products.

3.3.16 MARKER POSTS

In easements or where required on the plans, marker or guard posts shall be installed per the requirements of the Engineering Department. Where no vehicular traffic could be anticipated, the posts shall be 4x4 inch by 5 foot-6 inch dense structural grade redwood surfaced on all four sides and chamfered on the top. They shall be set into the ground 30 inches.

SECTION 3.4

PLAN PREPARATION

3.4.1 GENERAL

The Engineering Department has established procedures, which must be followed in the preparation of plans. Deviations from these requirements, unless specifically authorized will be cause for rejection by the Engineering Department. All engineers preparing plans should have in their possession a complete set of these Standards. All work shall be in ink on mylar sheets.

The engineer has a distinct responsibility to follow the progress of the work and to submit change orders or to incorporate "as-built" information on the drawings. “As-built” information is to be submitted on Mylar and DXF disc to the city.

It should be understood that the responsibility for accuracy and completeness of the drawings rests with the developer's engineer. By signing the drawings, the City Engineer attests to the fact that they have been reviewed and that the City Council has authorized construction.

3.4.2 SHEET SIZE AND MARGINS

Overall dimensions 24x36 inch (500mm x 750mm). Margins shall be 2 inches (50mm on left, all others 1/2 inch (13mm).

3.4.3 SIGNATURE BLOCK

All sheets of the plans shall have an approved signature block. The approval blocks shall be signed before any construction occurs. Any changes to the plans after initial approval shall be shown as revisions and shall be approved by the Engineering Department.

3.4.4 COVER SHEET

This shall be the first sheet in the set and shall contain:

A. Index Map. An index map with an overall plan at a scale of one inch = 300 feet showing general layout of waterlines, sizes, valve and fire hydrant locations, named streets, subdivision boundaries, lot boundaries and numbers, a sheet index and other pertinent information. The cover sheet shall include a note as to the pressure zone by number and elevation. Care must be exercised to make sure scale and orientation are correct since these index maps are used to produce a water atlas and incorrectly drawn maps will have to be redrawn.

B. Vicinity Map. A vicinity map with a scale of one inch = 1,000 feet showing subdivision boundary, streets, adjacent subdivisions, major streets outside of subdivision boundaries and the location of the bench mark.

C. Bench Marks. All bench marks used in the project shall be graphically shown on this sheet and the elevations, descriptions, locations, etc., spelled out as illustrated below:

B.M. No._____ Elev_____F.B._____Page_____

Type of Marker_____

Location _____

All elevations used in preparation of standard plans shall be based on Salt Lake County Surveyor's office information.

D. General Notes. The general notes shall be shown on the cover sheet and need not be shown on the other sheets. The general notes shall include a note requiring compliance with these standards and 5 day notice prior to beginning construction (see Section 4.11).

E. Water Service Certification. Water service certification is required and shall be worded as follows:

CERTIFICATION

I hereby certify that the water system as shown on Drawing Number ____ Sheets ____ through ____ has been designed to adequately provide each and every lot (or facilities) of this subdivision (project) with proper water pressure and fire flow.

Registered Civil Engineer_____ RCE No._____ Date _____

If the project does not involve specific lots, then substitute the words "...designed to adequately provide for the development said system is intended to serve."

Further, the engineer's Utah registration stamp including license expiration date shall be placed on the cover sheet.

F. As-built Materials List. On the cover sheet shall be a block to be used for as-built information. It shall be as follows:

MATERIAL LIST

ITEM	SUPPLIER OR MANUFACTURER	MODEL/TYPE NO.	NO.
Pipe			N/A
Services			
Fire Hydrants			
Valves			
Brass Products			

Prior to submittal of as-built drawings, the developer's engineer shall complete the pertinent information.

"As-built" certification is also required. The wording shall be as follows:

"AS-BUILT" CERTIFICATE

I hereby certify that the work shown on Drawing Number _____Sheet ____ through_____ inclusive, marked "as-built" has been constructed in conformance with lines and grades as shown on said plans and referred specifications.

Registered Civil Engineer_____ RCE No._____ Date _____

G. City Engineer's Certification for Approval to Construct. Appropriate designation for City Engineer approval to construct, located above title block (number and date to be completed by the Engineering Department).

Approved for Construction. _____ Date_____
City Engineer

3.4.5 PLAN OF CULINARY WATER SYSTEM

Plan drawings shall show location of water mains, service line locations and other structures in relation to survey lines and stations. Included shall be blowoffs, combination air release valves, main line valves, fire hydrants, thrust blocks, etc. ~~Provide all data for horizontal deflections or curves and~~ Indicate limits of any easements. Any known pad locations, which are adjacent to an easement, should be shown as well as fences, walls, trees, etc., which are within the easement. Show and label on the plans, the size and ownership of all existing and/or proposed underground utilities that cross or parallel the waterline. Facilities of other water purveyor mains shall be included on the plans where they exist.

3.4.6 PROFILE OF CULINARY WATER SYSTEM

If a profile drawing is required. Profiles shall show the grade, including any vertical curve data, size and type of pipe and the distances involved with pipe types or sizes. Any special encasement required to carry loads on the pipe shall also be shown. Items such as valves and the other structures or appurtenant features listed for the plan shall also be shown on the profile. Show elevations to 0.01 foot of waterline top of pipe. Any pipe line 2 inches (50mm) or more in diameter which crosses the waterline and especially wastewater, gas, telephone, power, storm drains, television and oil lines, shall be shown and labeled on the profile. The grade of major paralleling lines within 5 feet (1.5m) of the waterline shall be shown as dashed.

The City is not responsible for the accuracy of the location of these underground lines, and approval of water plans by the City does not constitute a representation as to the accuracy of the location of, or the existence or nonexistence of any underground utility, pipe or structure within the limits of the project.

3.4.7 GRAPHIC SCALES AND NORTH ARROW

All plan and profile sheets shall contain:

A. A graphic scale, horizontal as well as vertical, illustrated such that a true representation is produced when the plans are reduced in size, and they shall be as follows:

Horizontal 1 inch = 40 feet (25mm = 7.6m)
Vertical 1 inch = 4 feet (25mm = 1.2m)*

B. A north arrow oriented toward the top or to the right only, or as approved. Generally, north shall be oriented towards the top or right hand side of the sheet.

3.4.8 PROCEDURE FOR APPROVAL

Approval for improvement plans consists of two phases. Each phase consists of a series of requirements, which must be met before final acceptance.

A. Requirements for authorization of construction (See Section 5 of these Standards).

B. Requirements for final acceptance (See Section 11 of these Standards).

3.4.9 PLAN CHECKING LIST

The following list is intended as a guideline to assist the preparer; it is not represented to be a complete list of requirements.

Check List Plan Checking and Project Requirements

<u>Culinary Water</u>

Cover Sheet.

Standard size, title block, signature block. Revision and engineer's block
Key and vicinity map
Include lot numbers and lot lines. Sheet index
Pressure zone and elevation
Adjacent subdivisions and street layout
Bench mark
Design and as-built certificates
Pressure in project and fire flow requirement. General notes
Blue stake alert note. Engineer's stamp and expiration date

General Design

Conform to master plans
Check for oversizing requirements
Check for pressure and fire flow
Selection of pipe type(s)
For any tie-ins to the City's existing system, provide instructions relative to sequencing
Timing and thrust blocks

Plan & Profile Sheets

Graphic scales
North arrows
Water line stationing left to right
Elevations to top of pipe
Proper burial
Curve data if there are curves
Pipe sizes and type(s)
Street, curb dimensions, street names
Lot boundaries
Easements including line bearings
Angle points - show deflection angle right or left moving up station
Show valves, fire hydrants, comb, air release and blowoffs
Fire Department approval of fire hydrant type and location
Meter boxes not located in sidewalk, show detail
Lot numbers and pad elevations
Size of all meters and indicate for irrigation where appropriate
Line separation between any parallel pipes is normally 4 feet O.D. to O.D
Thrust blocks

Administrative Before Construction of Main(s)

Cost estimate
Inspection and plan check fee. Bonds and insurance.
Fire flow calculations
Water Availability letter
SWPPP & Notice of Intent

Administrative During or After Construction to Main(s)

Change Order Fee
Meter installation requests

3.4.10 STANDARD LANGUAGE FOR DEDICATION OF FACILITIES TO CITY

The following language is intended as an example of standard language for the dedication of facilities to the City. It shall be modified if necessary to fit a particular set of circumstances.

A. Grant Deed, Quit claim Deed, Bill of Sale or Other. All of its rights, title and interests in and to the water system, pipelines, manholes and appurtenances thereto as located in, on, over, under and across streets, easements and rights-of-way shown on Subdivision__ as per map thereof recorded in Book, Page___, and shown on the easements) as per Document No.___ recorded on_____ of Official Records, in the Office of the County Recorder, County of Salt Lake, State of Utah.

B. Easement Deed. An easement and right-of-way to lay, construct, repair, maintain, operate, renew and replace pipeline and appurtenances incidental thereto for the transportation of water with the rights to ingress and egress to and from same, in, over, under and across the following described real property in the County of Salt Lake, State of Utah, and rights to disturb the surface of the easement area or surface improvements constructed by the servient tenement wherein the responsibility for replacement or restoration shall belong to the servient tenement unless otherwise specified herein.

   See Appendix C for the exact language required by the City for property quit claim deeds and easements.

3.4.11 STANDARD NOTES

The standard notes should be included on the cover sheet. They are subject to change to suit the needs of the Engineering Department. Please see current standard notes.

SECTION 3.5

FEES, CHARGES AND REQUIREMENTS FOR AUTHORIZATION OF CONSTRUCTION

3.5.1 GENERAL

The authority for fees/charges is generally established in the South Jordan City Municipal Code. Specific fee/charge amounts are adopted by either City Council resolutions or ordinances. All fee/charge amounts are only adopted following the conducting of public hearings by the City Council as required by law. Copies of the current documents are available from the City.

3.5.2 SUBMITTAL OF MYLAR PRINTS (PLAN CHECK)

Two sets of the Mylar prints of the proposed water improvements, one copy of the final subdivision plat (where appropriate), one complete set of other than water improvement plans, and one copy of the developer's engineer's estimate shall be submitted. Plans illustrating an incomplete design and drafting detail may not meet minimum standards and may be just cause for a rejection of the first plan check. The developer or developer's engineer shall submit preliminary plans completed in accordance with these standards. The developer and the developer's engineer should be aware that projects involve several plan check/ submittals before the drawings are deemed to be in satisfactory condition. Also required will be fire flow calculations including the criteria used in determining the size of the lines and adequacy of transmission facilities including reservoirs.

3.5.3 SPECIAL PROVISIONS

If there are unusual conditions which would require substantial deviation from the City Culinary Water Design and Construction Standards, particularly with respect to service pressures, such deviations should be submitted in writing prior to preliminary plat and/or development project approval.

3.5.4 EASEMENTS

Any easements necessary must have deeds submitted for checking or must be shown on the subdivision plat before recordation.

3.5.5 AGREEMENTS, BONDS, AND INSURANCE CERTIFICATES

City staff will provide the developer with the proper forms and developer shall submit the following:

A. Insurance Policy Certificates. Insurance certificate with limits as stated in the "Agreement". Attention is particularly called to the City's requirements concerning submittal of an "Accord" form. The insurance certificate shall include general liability, auto liability and worker's compensation insurance in amounts as required by the Engineering Department or City Attorney. The City, its officers, employees and agents, shall be named as additional

insureds. The notice of cancellation period must be no less than 60 days. Any reference in the cancellation clause to "endeavor to" or "but failure to mail such notice shall impose no obligation or liability of any kind upon the company" must be deleted. Also, the words "This certificate is issued as a matter of information only and confers no rights on the certificate hold" must be deleted. If disclaimers cannot be deleted from the Accord form, then a signed warranty letter must be attached to the certificate.

B. City's Accord Form. The City reserves the right to request that the City's Accord form be utilized.

C. Payment Bond. A Payment Bond (Labor and Materials) in triplicate and notarized, equivalent to 100 percent of the estimated cost.

3.5.6 WATER AVAILABILITY LETTER

Prior to, or concurrent with, any City Engineer authorization to construct facilities or prior to any parcel receiving water service (one or both may be applicable), the Engineering Department shall issue a water availability letter indicating that the subject property lies within the City's service area and that the City will provide water service. This service is subject to certain terms, conditions and limitations as outlined in the water availability letter, as required by the Municipal Code or as required by these Standards. For subdivisions, the issuance of a water availability letter by the Engineering Department shall precede recordation.

3.5.7 APPROVAL FOR CONSTRUCTION

Upon receipt of all documents, bonds, fees and checking for all documents, bonds and fees, the staff shall prepare a memorandum to the City's Planning Department indicating the Engineering Department's concerns have been addressed and the project is ready for City Council approval, from an Engineering Department perspective.

Public Infrastructure Construction plans will require the signature of the City Engineer on a Mylar plan set. After the City of South Jordan development engineer says that your plans are approved and ready for signature the Design Engineer shall submit a set of the approved plans. This set will then be signed by the City Engineer. The signed set will be returned to the Design Engineer for the following copies to be returned to the City for use during construction: 2 – 11 x 17, 1 – original full size, and one full size copy.

At the completion of the work two sets of as-built plans on Mylar will be submitted to the City. In addition a set of as-built plans shall be submitted in a dxf electronic format. The City will not release the project to the warranty period until these plans are submitted and found accurate by the City Engineering Inspector.

If there are changes to be made to the plans after the signature of the City Engineer that are considered to be significant, the original Mylar sheet with the changes in a bubble shall be submitted for a revision signature of the City Engineer. Minor changes can be addressed on the as-built plans.

The purpose of this is to insure that the City Engineering Inspector is inspecting the approved set of plans. This will also insure that the Developer's contractor has the approved set of plans to build the project with.

No construction should occur before the plans are signed and before the proper five day Engineering Department notification has been given. This notification will allow time for a preconstruction meeting with all interested parties. The Engineering Department and the developer have a direct relationship via the documents outlined above. Therefore, to the extent possible, correspondence and verbal communication should be between these parties rather than between the Engineering Department and the contractor or subcontractors where the developer is excluded.

3.5.8 SERVICE LINE, FIRE HYDRANT OR METER INSTALLATION

In general, the developer will install the required service lines, fire hydrants, meter boxes and setters as part of the development project. For residential projects, the South Jordan Public Works Department will supply and install the water meter. Meters for commercial developments will be supplied by the South Jordan Public Works Department and installed by the developer.

Service line and fire hydrant connections to existing City owned pipelines will be inspected by an inspector from the Engineering Department.

Service saddles will be required on all services.

3.5.9 SPECIAL CHARGES

If there are items requiring special approval, the Engineering Department may require deposition of funds or agreements for funds in the future to provide for operation and maintenance of the substandard system.

3.5.10 MAIN LINE EXTENSION AND OVERSIZING AGREEMENTS AND LOCAL SHARES

The South Jordan City Municipal Code discusses this subject. In general, if any developer desires to enter into a reimbursement agreement with the City, such arrangements shall be made prior to the time that authorization to construct the waterlines (or system) is given by the City Council. The reimbursement agreements for main line extensions involve future payments to the developer installing the improvements if and when the City receives funds from other benefiting properties. In the case of a City contribution for over sizing a line, no City contribution can be considered unless the line is 10" or greater in diameter

3.5.11 FEES FOR PLAN CHECKING AND TESTING OF BACKFLOW DEVICES

Fees for plan checking (Engineering Review Fees) are outlined in City Council resolutions and require City approved tester provided by the Public Works Department.

SECTION 3.6

CONSTRUCTION STAKING

3.6.1 GENERAL REQUIREMENTS

Construction staking is the responsibility of the developer, his engineer or contractor. When the term 'construction staking' is used, it should be remembered that it encompasses construction pipeline markings, which may not involve any staking, such as markings on pavement. Stakes or marks will be set parallel to the pipeline alignment at an offset distance and direction agreed upon with the contractor, but in no case shall construction stakes be offset more than 10 feet. Stakes or marks will be set at no greater interval than 50 feet on straight alignments when the pipeline slope is 0.6 percent or more. For horizontally curved pipelines at less than 0.6 percent slope the stake or mark interval shall be 10 feet and for curved pipelines above 0.6 percent slope and for straight pipelines below 0.6 percent slope the stake or mark interval shall be 25 feet.

3.6.2 PRESERVATION OF STAKES

Construction stakes or construction markings shall be carefully preserved by the contractor until after the completed work has been accepted by the City. If two or more consecutive stakes are knocked out during construction, new stakes shall be set at the contractor's expense.

3.6.3 SERVICE LINES

For each service line, a stake shall be placed near the property line, referenced to show its location. If the meter box installation is not anticipated prior to field acceptance, then the stake shall be a minimum 2x4 inch redwood post 2 feet in length with 18 inches buried, painted blue on the top 3-4 inches.

3.6.4 "AS-BUILT DRAWINGS"

The stationing for each service line is required on the "as-built" drawings.

SECTION 3.7

CONSTRUCTION

3.7.1 GENERAL REQUIREMENTS

This section describes the use of materials and workmanship to be employed in construction of the culinary water system. The developer/engineer shall prepare such general and special specifications as are necessary to define the nature and location of the work, contractual arrangements, payment for work and any other matters concerning the owner or his contractor; these items are not discussed within the standards presented here.

A. Use of This Section. The construction section is intended to highlight the features of construction, which are deemed to be most significant. In any construction activity, the recommendations of the manufacturer of a product, if more stringent, should apply.

   There are a number of construction activities, which pertain to all pipe types, and these will be presented first. Specialized activities unique to a particular pipe type will be covered separately.

   See AWWA and APWA standards.

B. Protection/Operation of Existing Water Systems. A primary concern of the Engineering and Public Works Departments is the protection and operation of the existing water system. No developer or contractor will be allowed to operate any existing water valves or to cause a shutdown of any portion of the City's water system without prior approval from the Public Works Department. In general, Public Works Department personnel will do any operation of valves in a planned shutdown. Any planned shutdown should be set up via work order with the water department at minimum 3 working days in advance. Shutdowns will only be allowed if no other reasonable alternative exists, such as the use of a hot-tap connection in lieu of a cut-in tee. When shutdowns are required in a part of the City system, the City will expect evaluation of whether the shutdown should be done during the day or during the night. Contractor/developer economics shall be weighed less heavily in the decision than in the interruption and inconvenience to existing customers. Any shutdown shall involve a thorough 48 hours notification plan for existing customers as well as the provision of bottled water, water tanks, etc., where appropriate. Notification shall be done by contractor.

C. Quality of Materials. Materials and equipment to be incorporated into the work shall be new. In case a reference is not clear as to which of several available grades is desired, the highest quality material shall be used. When construction bids are received directly by the City such bids shall show the proposed pipe material and the manufacturer's name and specifications, if more than one type is allowed.

   Contractor shall have at the job site or be able to supply upon request, certified copies of factory or laboratory test reports showing the strength characteristics of any materials used in the work. For all reinforced concrete work, the contractor shall furnish in advance of

pouring concrete and, the mix design and calculated concrete strength as prepared by the concrete supplier.

D. Substitutions. Where articles or materials are specified by brand or trade name, alternate materials or articles equal to those specified may be approved provided the request for approval is in writing accompanied by supporting data, in ample time to permit investigations without delaying the work. Unless substitutions have received prior approval, no deviation from the Standards will be allowed.

E. Defective Work. Any defective materials or workmanship, which become evident within two years after field acceptance of completed work shall be replaced or repaired without cost to the City. Refusal of the contractor to correct defective work will be considered just cause for exclusion from performing future work to be connected to the City's system. Such exclusion does not impair the City's right to bring legal action to correct the deficiencies as well as to withhold release/exoneration of cash/letter of credit bond and payment bond.

F. City Inspection, Field Acceptance and Warranty Period. The Engineering Department is responsible for inspection of all excavation, pipe laying including appurtenant structures, trench backfill within the pipe zone and testing. All such work shall be available for inspection at all times. It will be the contractor's responsibility to provide a 24 hour notice to the Engineering Department prior to the start of any work. Such notification will allow for scheduling a preconstruction meeting between interested parties. Failure to provide proper notification may delay the starting date since the Engineering Department may not be able to inspect the work and cannot accept any work for which inspection has not been arranged. It must be emphasized that the primary responsibility for compliance with all City requirements and standards rests with the developer and/or contractor. Any acceptance of a portion of the work by a construction inspector does not relieve the developer/contractor of this basic responsibility.

   Field acceptance is made by the inspector and will not coincide with the date of City Engineer acceptance of the work. However, the two year warranty period for all work shall begin as of City Engineer acceptance. As mentioned in Section 7.1.E., any deflective work discovered during this period shall be repaired or replaced and a new one year period will begin for that corrected work. The new one year period cannot end before the two year warranty period.

   All holiday or weekend and after hours inspection will be subject to additional and overtime charges.

G. Public Relations. The contractor shall conduct its affairs in a manner which will lessen the disturbance to residents in the vicinity of the work. In this regard, standard working hours as specified in the Municipal Code and shall be observed unless prior approval is received, which also includes City observed holidays. The job site shall be maintained in a condition which shall bring no discredit to the City or its personnel, and all affected private improvements shall be restored to their original condition or better.

3.7.2 PERMITS

The following permits may be required of the contractor:

A. Right of Way Encroachment. Where construction will encroach into the public right-of-way or easements, the contractor shall obtain all necessary permits. Within South Jordan City right-of-way, the permit is secured from the Public Works Department. And within the County areas, a similar permit is required from the County. State roads require a permit from UDOT.

B. Explosives. Where the contractor anticipates the use of explosives in conjunction with the water construction, a blasting permit shall be first obtained from the South Jordan Fire and Police and Engineering Departments, and all nearby property owners shall be notified. These permits are discretionary and may not be given.

C. Other Permits. Other permits may also be required by other agencies, which must be applied for and obtained by the developer or his contractor. Certain permits are also required as part of the development conditioning process which must be provided prior to beginning construction of the project.

3.7.3 SHIPMENT AND DELIVERY

All pipes shall be braced and stilled to prevent damage during shipment. Any damaged pipe or fittings delivered and unloaded at trench side shall be removed by the contractor from the work site. An Engineering inspector must be in attendance to inspect the pipe prior to its removal from the transport vehicle. The inspector must also be in attendance when the pipe is being offloaded from the transportation vehicle or the City may reject the pipe.

With steel ML & C pipe (mortar lined & coated), the offloading of the pipe as well as placement in the trench shall be done with straps at each end. Chains shall not be allowed to come into contact with the pipe.

3.7.4 CLEARING AND GRUBBING

A. General. Clearing and grubbing which consists of removal of objectionable material from the right-of-way shall be done with caution such that existing wastewater improvements, adjacent property and trees and shrubbery that are not to be removed shall be protected from injury or damage. A UPDES permit shall be obtained prior to starting any work.

   Within water easements or rights-of-way, trees, shrubs, fences and all other improvements that have to be removed to permit construction and which are intended for replacement, shall be replaced in kind or size (excluding native trees under 2 inch diameter or native brush) or with approved substitutes unless permission to exclude such replacement is obtained from the owner/agency or granted by the Engineering Department. Replacement trees shall have a minimum diameter at breast height (DBH) recommended by the American Association of Nurserymen, but shall be larger if so required.

B. Removal and Disposal of Material. The contractor shall be responsible for leaving the site in a neat and finished appearance, free from debris or objectionable material.

3.7.5 UTILITIES, EXISTING FACILITIES, AND CONCRETE REMOVAL

A. Abandonment. Refer to Section 8.0 regarding abandonment of existing water lines and/or structures.

B. Utilities and Existing Facilities. Whether expressly indicated on the drawings or not, all contractors shall call Blue Stakes prior to any construction. Failure to do so shall not relieve the contractor of any liability associated with disturbance/ breakage of existing utilities.
In case it shall be necessary to remove any such utilities, facilities or any portions thereof, the contractor shall notify the Engineering Department and the owner of the structure. The contractor shall not interfere with said utility and/or facility structures until disposition of the obstruction to the work has been determined and/or notice to relocate or remove has been given by the Engineering Department and authorized agent of the owner of the utility and/or facility so affected.

The fact that any underground utility and/or facility is not shown on plans shall not relieve the contractor's responsibility to comply with these standards. It shall be the contractor's responsibility to ascertain prior to commencing work the existence of any underground utilities or facilities which may be subject to damage by reason of operations performed by the contractor.

The Public Works Department will provide service line location services of existing services upon request and with satisfactory notification in advance.

C. Concrete. Masonry or Mortared Construction Removal. At locations shown on plans, portions of existing concrete pavement, curbs, gutters, sidewalks, foundations and other concrete or mortared structures shall be removed to the lines and elevations specified. Concrete structures or objects not shown or noted on the plans shall be removed where necessary and disposed of by the contractor.

Concrete removal operations in connection with the reconstruction of existing structures shall be performed without damage to any portion of the structure that is to remain in place. If damage occurs, the contractor shall repair any such damage at his own expense, to the satisfaction of the Engineering Department. Repair/replacement of any sidewalks, curbs and/or gutters shall be to the satisfaction of the Engineering Department, as appropriate. Where existing reinforcement is to be incorporated in new work, such reinforcement shall be protected from damage and shall be thoroughly cleaned of all adhering material before being embedded in new concrete.

3.7.6 EXCAVATION AND TRENCHING

A. General. Trench excavation shall consist of all excavation involved in the grading and construction of the water line as shown on plans. The contractor shall perform all excavation of every description and of whatever substances encountered, to depths indicated on the drawings or otherwise specified or required. During excavation, material

suitable for backfilling shall be piled in an orderly manner a sufficient distance from the banks of the trench to avoid overloading and to prevent slides or cave-ins. The material piles shall also not obstruct existing sidewalks or driveways. All excavated materials not required or unsuitable for backfill shall be removed. Such grading shall be done as may be necessary to prevent surface water from flowing into trenches or other excavations, and any water from any source accumulating therein shall be removed by pumping or by other approved methods. Such sheeting and shoring shall be done as may be necessary for the protection of the work and for the safety of personnel. No other utility lines may be placed in the same trench with water lines.

Unless otherwise indicated, excavation shall be by open cut except that short sections of a trench may be tunneled if, in the opinion of the Engineering Department, the pipe or duct can be safely and properly installed and backfill can be properly tamped in such tunnel sections.

B. Excavation. Excavation for water lines shall be made only after pipe and other necessary materials are delivered on the work site. After such delivery, trench excavation shall proceed as rapidly as possible, and the pipe installed and the trench backfilled without undue delay.

Where rock excavation is required, the rock shall be excavated to a minimum overall depth of 6 inches (150 mm) below the trench depths indicated on the drawings or specified. Over depths in the rock excavation and unauthorized over depths shall be backfilled with the same material as the bedding zone. Whenever wet or otherwise unstable soil incapable of properly supporting the pipe, as determined by the Engineering Department, is encountered in the bottom of the trench, such soil shall be removed to the depth required and the trench backfilled to the proper grade with an appropriate material between coarse sand and crushed rock to provide a stable foundation.

C. Shoring. All shoring for open excavations shall conform to the State of Utah, Department of Industrial Relations, and Division of Industrial Safety "Construction Safety Orders (O.S.H.A)."

The contractor shall be responsible for adequately shored and braced excavations so that the earth will not slide, move or settle, and so that all-existing improvements of any kind will be fully protected from damage and for safety of workers.

No shoring once installed shall be removed until the trench has been approved for backfill operations. Removal of shoring shall only be accomplished during backfill operations and in such a manner as to prevent any movement of the ground or damage to the pipe or other structures.

The contractor shall obtain and pay for all permits for any excavations over 4 feet in depth into which a person is required to descend or any excavation less than 4 feet in depth in soils where hazardous ground movement may be expected and into which a person is required to descend.

D. Trench Width and Grade. The width of the trench within the pipe zone shall be such that the clear space between the barrel of the pipe and the trench wall shall not exceed the amount detailed in the standard drawings. See standard Drawings

E. Pipe Subgrade. The trench bottom shall have a flat or semi-circular cross section. The bottom of the trench shall be graded and prepared to provide a firm and uniform bearing throughout the entire length of each joint except for required "bell holes" at joints. A coupling hole shall be excavated as necessary with sufficient length, width and depth to permit assembly and provide a minimum clearance of 3 inches (75 mm) below the coupling for a length of 6 inches (150 mm) beyond the coupling.

3.7.7 PIPE BEDDING AND LAYING

A. General. This portion of the work includes the furnishing of all materials and their proper assembly to result in a first class waterline installation.

Where choices are allowed, the contractor shall select such materials and construction methods as will result in a completed project in full accordance with these Standards. In that regard, refer to the standard drawings for additional details.

The contractor is warned that the approved water pipeline design is based upon a proper combination of pipe strength and pipe support. No acceptance will be given unless the work of trenching, bedding, laying, backfilling and compaction is conscientiously done in accordance with the procedures outlined in these Standards as well as APWA and AWWA.

Except as otherwise approved or included in permits, the maximum length of open trench at any one time shall be 500 feet.

~~Deflection angel shall not exceed 2 degrees per 20-foot section of pipe for pipe sizes smaller than 14 inches and shall not exceed 1 degree for pipe sizes between 14 inches and 16 inches and the deflection must be taken in the joint.~~

Grades shall be transferred from ground surface to the bottom of the trench by experienced workers, using not less than three consecutive grade points in common, so that variations from a straight grade may be readily detected. Each length of pipe shall be laid on firm, approved bedding material as specified and shall have full bearing for its entire length between bell holes excavated in said bedding material to allow for unobstructed assembly of all joints. Pipes shall not be dropped into trenches. Adjustments of pipe to line and grade shall be made by scraping away or filling in and tamping approved material under the body of the pipe. No wedging or blocking with wood or soil to support the pipe will be permitted. Under no circumstances will a contractor be allowed to dump backfill materials on top of a pipe which is not continuously supported in its final grade position.

In such manner as to form a close concentric joint with the adjoining pipe, following manufacturer's instructions for the specific jointing method being used. Pipe shall not be laid when the engineer or inspector determines that the condition of the trench or weather is unstable. Trenches shall be kept free from water until sufficient backfill has been applied to keep the pipe in place. At times when work is not in progress, open ends of pipe and fittings

shall be securely closed to the satisfaction of the inspector so that no trench water, earth or other substance will enter the pipe or fittings. Pipe or fittings damaged during assembly shall be removed and replaced. All fittings to be coated Poly FM grease and wrapped with 8-mi thick polyethylene.

B. Pipe Laid on Bedding vs. Earth Mounds. The key elements to the pipe bedding are that the pipe ultimately be continuously supported and that the full 6 inches of bedding material (imported sand or better) be placed under the pipe. Where pipe is to be laid where considerable amounts of rock or cobble stone or groundwater are present, then the continuous bedding method shall be used. Earth mounds may be used, if specifically approved by the Engineering Inspector, in areas exhibiting ideal pipe laying conditions where there is clear demonstration that the 6 inch bedding material will be placed after the pipe is laid in the trench.

For the continuous bedding method, the trench bottom shall be over excavated a minimum of 6 inches and brought back to grade with imported bedding material. Prior to lowering pipe into the trench, coupling holes shall be excavated in the bedding with sufficient length, width and depth to permit assembly and provide a minimum of 2 inches below the coupling.

For the earth mound method, the mounds shall be compacted firmly and be of a size adequate to suspend the pipe 6 inches above the trench bottom while maintaining the pipe true to grade. Each length of pipe shall be laid on two mounds with the center of each placed at approximately one-fifth the distance from each end. Coupling holes shall provide a minimum clearance of 2 inches.

After assembly, the trench zone shall be properly backfilled with imported bedding material. The bedding material shall then be compacted utilizing appropriate methods to provide a firm and uniform bedding throughout the entire length of pipe. With caution tape 18” above pipe and trace wire.

C. Pipe Laying For PVC Pipe.

1. Lowering of pipe and accessories into trench. Pipe shall not be lowered into the trench until the pipe bed has been brought to grade. Dirt and other foreign matter shall be removed from the interior and the machined ends before lowering into the trench. Pipe and accessories shall be lowered carefully into the trench by hand or with suitable equipment in a manner that will prevent damage to pipe and fittings or injury to the installers. The sealing surfaces of all materials shall be kept clean during installation.

2. Pipe Joints. The machined ends of pipe to be jointed, coupling grooves and rubber rings shall be cleaned immediately before assembly, and assembly shall be made as recommended by the manufacturer. Care should be taken not to reverse the gasket when placed in the bell. The pipe joint must not be deflected either vertically or horizontally beyond 1 degree.

3. Unless otherwise approved in writing based on manufacturer instruction, stabbing or swinging the pipe into position is not acceptable for pipes above 10 inches in diameter. For smaller pipes it may be used providing the following is done:

a. The minimum length of swing necessary to join the pipe should be used,
b. The pipe end must be in perfect alignment with the receiving coupling,
c. The pipe end must be thoroughly lubricated,
d. The joints shall be "gauged" after installation,
e. Methods meet the approval of the Engineering Department.
f. The contractor is aware that this procedure, if not properly executed, can result in impact damage (cracks) in either the pipe coupling or the pipe spigot.

Gasket lubricants shall be NSF approved and water-soluble specially prepared for use in potable water systems. After assembly, proper location of the gaskets shall be gauged with a manufacturer supplied feeler gage.

When pipe laying is not in progress, the open ends of installed pipe shall be closed to prevent entrance of trench water into the line.

Whenever water is excluded from the interior of the pipe, enough backfill shall be placed on the pipe to prevent floatation. Any pipe that has floated shall be removed from the trench and the bedding corrected.

4. Length of pipe at fittings and rigid structures. When rigid joints are formed by caulked materials or by bolts with rubber ring seals, such as fittings, the length of 8 inch diameter and smaller pipe fitted into the bell of the fittings shall not exceed 3 feet-3 inches and the length of 10 inch diameter and larger pipe shall not exceed 6 feet-6 inches. At least one flexible joint shall be used between two adjacent rigid joints.

5. The laying of PVC C900 pipe is similar to that of other pipe with the following exceptions: Because it is a plastic product, the pipe should be covered with an opaque material if it is to be stored outside for a prolonged period of time (45 days).

D. Pipe Laying For Ductile Iron Pipe. Ductile iron pipe shall be laid in accordance with manufacturer instructions and in general compliance with the applicable procedures as listed for PVC pipe. Where specified, the Engineering Department may request a specification for such installation practices. Specific attention shall be given to the placement of the polyethylene encasement wrap and any tapping of the pipeline for
services and/or other main connections.

E. **Pipe Laying for High Density Polyethylene Pipe.**

1. High density polyethylene pipe shall be installed according to the requirements of ASTM D 2321, AWWA M 55, and the manufacturer's requirements. Wherever these requirements are in conflict, the more stringent requirement shall apply.

2. Pipe embedment - Embedment material should be Class I, Class II, or Class III materials as defined by ASTM D 2321 Section 6. The use of Class IV or Class V materials is not recommended; however, they may be used only with the

evaluation and approval of ENGINEER at a demonstrated achievable compaction.

3. Bedding: Pipe bedding shall be in conformance with ASTM D 2321 Section 8. Compaction rates should be as specified in ASTM D 2321. Deviations shall be approved by ENGINEER.

4. Haunching and backfill shall be as specified in ASTM D 2321 Section 9 with Class I, II, or III materials. Compaction shall be in excess of 85% Proctor, providing a minimum modulus of 1,000 psi or greater.

5. Sections of pipe shall be joined into continuous lengths by the butt fusion method and shall be performed in strict conformance with the pipe manufacturer's recommendations using approved equipment. Sections of pipe shall be as long as practical to minimize the number of joints.

6. High density polyethylene pipe shall be installed, backfilled, and allowed to acclimatize to the typical soil temperatures prior to connection to other piping systems.

Pull-In Installation

Per ASTM F 1804, CONTRACTOR shall determine and document the maximum proposed pull-in length and pull-in force for the pressure class and pipe diameter to be pulled into an open trench. Pull-in lengths will not exceed the maximum lengths for the class and diameter pipe. A commercially available load limiter (weak link) approved by ENGINEER shall be used between the puller and the pipe.

Prior to pulling the pipeline, CONTRACTOR shall place rollers or other approved devices beneath the pipe to avoid unnecessary damage and to reduce pipe drag.

Trenchless installations:

For slip lining, refer to ASTM F 585, PPI PE Handbook (Chapter 11).

For pipe bursting, refer to PPI PE Handbook (Chapter 16).

3.7.8 THRUST BLOCKS, SUPPORTING OF VALVES, ETC.

A. Supporting of Valves. Valves and fittings shall be supported by the trench bottom and shall be independent of the pipe. When pouring thrust blocks around a fitting, the concrete should be around the fitting and not the joint.

B. Thrust Blocks. These shall be placed as shown on the plans or as required by the Standard Drawings. Care shall be taken to insure that the concrete is poured against undisturbed ground and the fitting to be anchored. Contractor to provide thrust blocks as required.

3.7.9 HOT TAPPING

Hot tapping shall only be done in the presence of the Engineering and Public Works Departments' representatives. Water mains will be hot tapped as called out on the approved plans. Under special circumstances, when a contractor submits a request for a shutdown contrary to the approved plans and the request is approved at the discretion of the City Engineer or designee, the contractor must provide 48 hour notice to neighbors and those affected. If businesses are impacted by the shutdown it will be done after hours and all overtime fees for City personnel, equipment and vehicles must be paid in advance.

Previous sections discuss the tapping sleeve and valve requirements.

The tapping mechanism shall be of the self-purging type so that cutting chips are removed from the tapping machine and do not enter the pipeline. Tapping sleeve shall be placed 3' from any fitting or bell end. Hot tap may be cancelled by city staff due to weather, time or unsafe work conditions.

3.7.10 SERVICE CONNECTIONS AND SERVICE LINES

Saddles are to be installed after hydrostatic tests have passed and while mainline is pressurized to operational pressure. With AC pipe the Engineering Department may require the developer/contractor to replace a section of pipe. The specified tapping method shall be listed in the construction drawings.

Service connections on the opposite sides of the pipe are not allowed. Connections shall have a minimum of 3 feet of separation from any fittings, service connections, and joints in the pipe.

As shown on the Standard Drawings, service connections to the main where IPS poly is used for the service line shall be made at 15 degrees above horizontal (spring line).
In all metal-to-metal threaded connections, use either Teflon tape or sealing compound.

Service lines shall be one continuous length from the main to the meter "snaked" within the trench to allow for expansion or contraction.

All service lines shall meet backfill and compaction requirements within City right of way.

3.7.11 INSTALLATION OF VALVES AND FITTINGS

Valves and fittings shall be installed at the locations and grades shown on the plans. The following items comprise a checklist:

A. The weight of the valve or fitting is to be taken by firm ground or blocking and not the pipe.

B. All materials are covered in previous sections.

C. Valves and all bolted connections shall receive a plastic film wrap and Poly FM grease installed as follows: The valves shall be wrapped by passing the flat sheet of film under the valve bottom and bringing the ends up around the body to the stem and securing it in place

with 2 inch strips of the plastic adhesive tape. The polyethylene shall be secured around the valve stem in such a manner as to leave the stem free to operate. The film shall be brought completely around the flanges and secured to the pipe with a plastic adhesive tape on either side of the valve, flange or fitting.

D. All bolted connections shall be performed in an even manner by a series of tightening steps so that no portion of the bolted connection is overstressed.

E. All valves in landscaped areas to be place in a concrete pad 4'x5'x6"

3.7.12 INSTALLATION OF AIR RELEASE AND BLOWOFF ASSEMBLIES

Combination air release and blowoff assemblies shall be installed as shown in the Standard Drawings. The developer/contractor shall locate the combination air release cans and blowoff vaults in a suitable location with respect to the adjacent properties, preferably at a side lot line. This shall include locating them closer to property lines rather than in the middle of a property where there could be future objections from the property owner. The service line to the assembly shall have a positive grade to prevent accumulations of air. Landscaping and irrigation adjacent to vaults shall drain away from vaults.

Dielectric connections with PVC tape wrap shall be provided at all connections between steel and brass or bronze. See the Standard Drawings.

3.7.13 INSTALLATION OF FIRE HYDRANT ASSEMBLIES

Fire hydrant assemblies are to be installed in accordance with the general instructions contained in the AWWA. Hydrants should be placed on a lot line, where feasible. Special attention is called to the following:

A. The 2 feet setback from the curb face must be adhered to regardless of whether the curb is next to a private street or within a private street or parking lot. The 2 feet dimension is from the curb face to the nearest portion of the fire hydrant and is not to the fire hydrant centerline.

B. The elbow in the fire hydrant bury must be anchored on a concrete thrust block.

C. The fire hydrant shall be positioned so that the bolts between the extension piece and the hydrant are accessible, both top and bottom within the limits shown in the Standard Drawings. If the hydrant is either too low or too high, it shall be corrected.

D. Painting all metal surfaces above ground including any extensions. It is suggested that the extension piece be painted before pouring the sidewalk.

E. Hydrants and auxiliary valve to be placed in a concrete pad 4'x5'x6" thick, over 6" of road base.

3.7.14 INSTALLATION OF METER BOXES, PRESSURE REGULATORS

A. General. Specific installation details are shown in the standard drawings. Information concerning the sizing of meters is presented in a previous section. In all cases, the Engineering Department will select the meter type and install the meter after proper arrangements have been made.

B. Meter Boxes. These shall be set with the longitudinal axis perpendicular with the street and located center of lot or center of park strip with respect to the curb. Under no circumstances shall they be located within driveways

C. Jurisdiction. All pipes on the customer side of the meter box are under the jurisdiction of the South Jordan City Building Department, if the property is within City boundaries.

D. Pressure Regulators. Wherever the normal operating pressure at the house or building exceeds 80 psi, then a pressure regulator is required. For convenience, the houses or buildings requiring regulators are shown on the plans, but this does not relieve the developer/contractor of responsibility to check the pressure of each house or building. The types of regulators and their installation are as required by the Building Department.

TRACER WIRE AND CAUTION TAPE

Tracer wire should be added and put up through every valve box including auxiliary valve boxes for Fire Hydrants. Tracer wire needs to be continuous with no breaks in service throughout the entire system. Tracer wire should be 14 gauge wire coated solid copper with moisture resistant nut (grease nut). The tracer wire shall be 2' above the lid; this is known as "Engineer's Slack". The tracer wire should be placed below the spring line and under the haunches.

Caution or Warning Tape should be placed 18 inches above all the mains and all six inch diameter pipes and larger service laterals and shall be blue in color, to signify culinary water.

3.7.15 BACKFILL AND COMPACTION

A. General. There are several distinct zones to be considered in the backfilling procedure as follows.

1. Pipe Zone. This area is from the trench bottom to 18.5 inches above the pipe. This zone is to be backfilled under the strict jurisdiction of the Engineering Department.

2. Above the pipe zone but below pavement subgrade and including the subgrade and pavement backfill and compaction in existing streets shall be in accordance with the APWA/AASHTO requirements, and with the City land development specifications. In both cases, the filling of trenches shall be subject to approval by the City or Engineering inspector who shall have full authority to order compaction tests to demonstrate the actual backfill density.

B. Backfilling Pipe Zone. Sand, as specified in APWA or AASHTO, must be used and shall be placed in the pipe zone with particular attention to getting material to the underside of the pipe and fittings to provide a firm support along the full length of the pipe. Care shall be exercised in backfilling to prevent damage to the pipe or coating, as applicable. Backfill in the pipe zone may be either compacted by hand tamping methods or flooded into place in a single lift without hand working. In no case shall sufficient water be applied to float the pipe.

   Acceptability of compaction in the pipe zone will be determined primarily by visual inspection and probing by the City's inspector to determine that no voids exist in the backfill. The backfill within the pipe zone shall meet the requirements of 96 percent relative compaction.

C. Backfilling above Pipe Zone. The sequence of backfilling and compaction above the pipe zone (in public right-of-way, i.e., streets) shall be testing for pipe and joint leakage will be done after consolidation of the backfill to the top of the subgrade zone and after service lines have been installed to the property lines.

   Backfill, compaction and resurfacing shall be scheduled so that existing public streets may be opened to normal traffic in accordance with the City right of way permit, and so that the backfill operations closely follow the pipe laying avoiding open trenches overnight.

   The trenches or excavations shall not be backfilled without prior inspection by the Engineering Department. Such inspection does not relieve contractor from compliance with the testing of the waterline which should be conducted after final assembly of main and service lines in consolidation of backfill as described above. Contractor shall assume the cost of removal and replacement of backfill necessary for correction of defective conditions revealed by testing.

   If no pavement is to be placed, the backfill zone between the top of the pipe zone and the bottom of the subgrade zone or ground surface may be filled with approved select backfill. It shall be placed in lifts not exceeding 12 inches in un-compacted thickness, and compacted by mechanical means so as to obtain 96 percent relative density, except for the subgrade zone, consisting of the space under pavement and/or shoulder to finished road grade which shall be filled and compacted to the prevailing City requirements, without flooding or jetting.

   If the work is in private property and not subject to public agency requirements, excavations shall be final, backfilled, compacted and finished to match original conditions as interpreted by the Engineering Department as further described in Section 10.0 - Water System and Work Area Final Clean-up.

   In traffic areas within public right-of-way where pavement is to be replaced, the City or County requirements may call for flowable fill mixture to be used for trench backfill. This requirement will generally apply to repair trenches, which are 2 feet or less in width. For trenches wider than 2 feet, the Engineering Departments may approve the aforementioned procedures. It must be emphasized that the specific requirements above the pipe zone are within the jurisdiction of the Engineering Department and developers/contractors shall have

a responsibility to investigate and comply with all applicable requirements. Backfill under pavement shall be compacted to 96% modified proctor.

D. Compaction Tests. These tests shall be taken as determined by the Engineering Department. The developer/contractor shall make all necessary excavation for the tests at locations selected by the Engineering Department, and shall refill and compact these excavations to the specified densities.

3.7.16 RESURFACING AND RESTORATION

If the water work shall occur in streets where no paving exists, the contractor shall, in accordance with City requirements contained in the APWA and AASHTO Standards, leave the completed trenches compacted road base for finish grading, placement and paving by others.

If the work is within existing City, County or State streets, any required surfacing shall be in accordance with the City, County or State excavation permits.

If the work has disturbed or damaged existing private streets, alleys, driveways or other improved surfaces, the damaged portions shall be removed and restored, including the provision of adequate sub-grade where these operations have disturbed the original material at no cost to the City.

Substructures removed or damaged on public or private property shall be restored or replaced unless such structures are designated on plans "to be abandoned". Such structures include but are not limited to trees, bushes, plantings, groundcover, mailboxes, fences and sprinkler systems.

Any temporary paving, barricades, fencing or special provisions required by public agencies shall be furnished by the contractor as required.

3.7.17 BORING AND JACKING OPERATIONS

A. General. Placement of pipe by boring or jacking methods requires special Engineering Department approval for each instance. However, as a general guideline, the following shall pertain:

1. Except for the use of air or water, the methods and equipment used in boring and jacking operations shall be optional to the contractor provided that the Engineering Department reviews them prior to any work.

2. The placement of pipe shall be to the lines and grades shown on the plans.

3. Voids remaining outside the pipe (or carrier pipe if applicable) shall be backfilled with 200 psi concrete.

4. Where a casing pipe is used, it shall be no less than 8 inches greater in diameter than the pipe to be installed, however engineer and contractor may need to size casing larger to fit joint restraints in casing. The City requires stainless steel tie-down restrains with turnbuckles only. 5/8" rebar is not acceptable.

5. The placement of pipe in casings shall be supported with casing spacers.

6. All joints in casing shall be restrained.

B. Bores. The boring machine shall cut a true circular bore to the required line and grade. The bored tunnel shall be no more than 2 inches larger in diameter than the maximum outside diameter of the casing or water pipe to be installed.

C. Jacked Steel Casings. In addition to applicable portions above, the following shall pertain:

1. Where casings are used, the size and wall thickness of the casing shall be at the contractor's option except that the minimum casing thickness shall be not less than 3/8 inch.

2. Field joints of steel casings shall be welded with a continuous circumferential weld.

3. Prior to backfilling the annular space between the pipe and casing, the pipeline shall be tested.

4. The annular space shall be backfilled with washed concrete sand blown or rammed into place until the entire cavity is filled. Concrete bulkheads shall be placed at each end of the cased section to retain the backfill material.

3.7.18 CONCRETE AND MORTAR WORK

A. Concrete.

1. Material. Concrete used for encasements, filling, blocking, piers and other typical water construction applications shall be transit-mixed concrete from a supervised batch plant which issues certified delivery tickets with each load, showing the mix proportions, mixing time, truck departure time and water added. Such certified tickets will be handed to the inspector at the time of delivery. Ready-mixed concrete shall be batched and handled in accordance with ASTM. Job mixed concrete shall be limited to that needed for patching and minor non-structural uses requiring one sack of cement or less. In these cases, the materials and workmanship shall be the same as if transit-mixed concrete had been used. The 28 day compressive design strength of concrete shall be chosen according to its intended use.

2. Placement. Concrete shall be placed in clean forms before its initial set begins, using the minimum amount of mixing water required for good workability. Concrete shall be worked into forms by rodding or vibrating to secure a dense homogeneous mass free from voids and rock pockets. All concrete shall be vibrated unless the inspector approves solely rodding to avoid having the concrete run out of the forms or trench.

3. Finish. Concrete surfaces where required shall be steel trowelled to a smooth hard surface free from ridges, holes and surface roughness. Exposed walls shall be left with a surface finish comparable to that obtained with new plywood forms. Slabs and walkways shall be finished with a wood float unless otherwise specified. Corners and edges shall be neatly beveled. Surface defects shall be repaired to match the surrounding concrete.

B. Mortar. Mortar for general work (exclusive of ML & C steel pipe) shall consist of one part Type II Portland cement and two parts of sand, by volume, thoroughly mixed in a dry state before adding sufficient water to give the mortar a proper trowelling consistency.

3.7.19 CONSTRUCTION WATER

The developer/contractor shall not take un-metered water from the City's culinary water system. Instead, he or she shall sign up at the Public Works Department for one or more construction meters after receipt of a deposit amount. The developer/contractor is not to move the construction meters. Charges for construction water are covered by City Council Resolution. The developer/contractor is put on notice that unpaid invoices will result in removal of the construction meter.

3.7.20 PAINTING

They shall be opened and mixed at the job site and shall comply with AWWA. Workmanship shall be of a kind and quality meeting the requirements of the best standards of the painting industry. Skilled and experienced painters shall do all work. Surfaces to be painted shall first be thoroughly cleaned to remove dirt, loose scale, rust, oil, grease and/or other foreign matter immediately prior to painting. Cleaning shall be done with abrasives, scrapers, wire brushes and/or other approved means.

Each coat shall be applied in such a manner as to assure an even, smooth, uniform adhering coat free from dirt, runs, brush marks and laps, and shall be applied as recommended by the manufacturer.

Painting will not be permitted when rain, fog or condensation may damage freshly painted surfaces or when inclement weather can be anticipated. The contractor at his expense shall replace fresh paint damaged by the elements. Drop cloths shall be used to protect floors, equipment, piping and other exposed surfaces from spattering and spillage. Paint shall be allowed to dry thoroughly between applications of successive coats. The manufacturer's recommended the City Engineer as to when the next coat of paint may be applied will use time between coats as a guide. The Engineering Department must give approval before successive coats are applied, unless otherwise approved. The contractor shall notify the Engineering Department after surface preparation and after the application of each successive coat of paint. Spray painting will not be permitted unless specifically authorized by the Engineering Department.

3.7.21 SAFETY

Wherever the contractor is aware of unsafe operations, such should be discontinued immediately. Also, if the inspector is aware of such conditions and informs the contractor of it, it will be the contractor's responsibility to comply. In such instances, the advice shall not be construed as implying any City liability.

Essential to proper safety is adherence to all MUTCD work area traffic control requirements and as specified by the Engineering Department. 3M Diamond Grade sheeting, or an approved equivalent, is required for all construction signage.

Contractor is to submit to the City a copy of their annual OSHA permit and the letter notifying OSHA of their work on the City's project.

SECTION 3.8

ABANDONMENT

3.8.1 GENERAL

The developer's engineer shall indicate all existing water lines and water appurtenances which are to be abandoned on the drawings. In general, abandoned lines, which are in service, will be replaced with a parallel line of equal or larger size, and the engineer shall demonstrate in any case that the abandonment does not adversely affect the water system. In the event the water plans show one or more valved outlets are incorrectly located or not used for any reason when the property is developed, the developer shall abandon the outlets at the connection to the active main as approved by the City Engineer.

All abandonment and construction techniques shall be discussed with the Engineering Department inspector and approved prior to any such work.

3.8.2 WATER SYSTEM APPURTENANCES

Water system appurtenances associated with lines to be abandoned shall be removed by the contractor/developer and given to the City if salvageable.

SECTION 3.9

TESTING AND DISINFECTING WATER MAINS

3.9.1 GENERAL

This section applies to new water main construction as well as the repair of or connection to existing water mains within the City.

All completed water lines, as well as the service lines and appurtenant structures will be tested by and at the expense of the contractor in the Engineering Department inspector's presence prior to field acceptance of the work. The contractor must correct all defects in workmanship or materials that become evident by inspection or testing at any time during the work. Testing will be done after the complete installation and compaction of all underground utilities, except as modified below. Contractor shall provide appurtenances to perform pressure test and disinfections as required by the City Engineer. The contractor shall provide positive isolation of proposed culinary water lines from existing lines, as approve by the City, during construction, testing, chlorinating, and final connection procedures as specified in the AWWA.

3.9.2 HYDROSTATIC TESTING

A. General Requirements. In this section, the procedures used for testing cement mortar line and coated steel pipe will first be presented and then any differences for PVC or ductile iron pipe will be presented under a separate subsection. The purpose of the hydrostatic test is both to test for the ability of the pipeline to withstand pressure and to test for an acceptable leakage. 5 lb increment gages shall be used.

   After the pipe and all appurtenances have been laid and backfilled and compacted sufficiently for required restraint, they shall be subjected to a 2 hour hydrostatic pressure test. This test shall consist of subjecting the pipeline to a hydrostatic pressure of 200 psi. This value for the test pressure shall be used for most installations. However, where the operating pressure exceeds 125 psi as called out on the cover sheet of the drawing then the test pressure shall not be less than 225 psi for Class 150 pipe or 250 psi for Class 200 pipe. This test pressure shall be at the low point in the section being tested and shall be corrected to the elevation of the test gauge. Test locations shall be designated by the Engineering Department. The pressure test or retest shall be conducted any time after trench backfill compactive effort with heavy-duty compacting equipment having an overall weight in excess of 125 pounds.

   The maximum length of pipe to be included in any one test shall be not more than 2,500 feet or the distance between valves, whichever is less. The contractor shall provide suitable test bulkheads, blocking and fittings to permit such sectionalizing.

B. Preparation. After chlorine and Bac-T has passed. During this period no pressure need be maintained on the line although some pressure, say 50 psi, will help to saturate the line and remove the air. While filling and immediately prior to testing, all air shall be expelled from the pipeline and whenever practical, water should be introduced from the low end of new

system to facilitate the elimination of air in the pipeline prior to testing. Where air valves or other suitable outlets are not available for releasing air before applying the test, approved taps and fittings shall be installed and later securely plugged. All equipment used for the hydrostatic test must be disinfected.

C. Procedure. The pipeline pressure shall be stable at 200 psi for 2 hours.

D. Differences for PVC Pipe. The soaking period requirement is not as critical for PVC pipe since the walls do not absorb water and become saturated. AWWA recognizes a 2 hour leakage and pressure test.

E. Differences for Ductile Iron Pipe. As with PVC pipe, the soaking period is not critical unless the pipe is mortar lined. Then a minimum 24 hour period is required.

3.9.3 ROLE OF FLUSHING

All mains shall be flushed with potable water after completion of disinfection test. The primary purpose of this function is to remove the sediments and miscellaneous products of construction and flush high chlorine from line. Please see AWWA for requirements

3.9.4 DISINFECTING WATER MAINS

This section presents essential procedures for disinfecting new and repaired water mains. All new mains shall be disinfected before they are pressured tested. All water mains taken out of service for inspection, repair, or other activities that might lead to contamination of water shall be disinfected before they are returned to service. All work is to be done in conformance to AWWA.

3.9.5 FINAL FLUSHING

See current AWWA standards for final flushing.

Contractor shall pay for water if Bac-T Samples fail and another flush is required.

A. Clearing the main of heavily chlorinated water. After the applicable retention period, heavily chlorinated water should not remain in prolonged contact with pipe. In order to prevent damage to the pipe lining or corrosion damage to the pipe itself, the heavily chlorinated water shall be flushed from the main. This shall be done until chlorine measurements show that the concentration in the water leaving the main is less than one mg/l.

B. Disposing of heavily chlorinated water. The environment into which the chlorinated water is to be discharged shall be inspected. If, in the opinion of the Engineering Department inspector, there is any possibility that the chlorinated discharge will cause damage to the environment, then a neutralizing chemical shall be applied to the water to be wasted to neutralize thoroughly the chlorine residential remaining in the water. Federal, state and local regulatory agencies should be contacted to determine special provisions for the disposal of heavily chlorinated water.

3.9.6 BACTERIOLOGICAL TESTS

A. General. After final flushing and before the main is placed in service, the Public Works Department will sample the water and test for bacteriologic quality. Tests will not be allowed after 12:00 p.m. on Thursdays and not at all on Fridays. Samples shall be taken of water that has stood in the new main for at least 24 hours after final flushing has been completed.

B. Standard conditions. After final flushing and before the new water main is connected to the distribution system, two consecutive sets of acceptable samples, taken at least 24 hours apart, shall be collected from the new main. At least one set of samples shall be collected from every 1,200 feet of the new water main, plus one set from the end of the line and at least one set from each branch. All samples shall be tested for bacteriological quality in accordance with *Standard Methods for the Examination of Water and Wastewater,* and shall show the absence of coliform organisms.

C. Special conditions. If trench water has entered the new main during construction or, if in the opinion of the Engineering Department inspector, excessive quantities of dirt or debris has entered the new main, bacteriological samples shall be taken at intervals of approximately 200 feet and shall be identified by location. Samples shall be taken of water that has stood in the new main for at least 24 hours after final flushing has been completed.

D. Sampling procedure. Samples for bacteriological analysis shall be collected in sterile bottles treated with sodium thiosulfate as required by *Standard Method for Examination of Water and Wastewater.* No hose or fire hydrant shall be used in the collection of samples.

E. Record of Compliance. The record of compliance shall be the bacteriological test results certifying the water sampled from the new water main to be free of coliform bacteria contamination, and to be equal to or better than the bacteriological water quality of the distribution system. The Public Works Department is responsible for conducting the bacteriological testing for the project. Once the results are received by the Public Works Department, they will send a copy of the test results to the Engineering Department for their records and will also transmit a copy to the State of Utah, Division of Drinking Water.

3.9.7 RE-DISINFECTION

If the initial disinfection fails to produce satisfactory bacteriological results, the new main may be re-flushed and shall be re-sampled. If check samples also fail to produce acceptable results, the main shall be re-chlorinated by the continuous feed or slug method of chlorination until satisfactory results are obtained. The first initial flush will not cost but each flush there after will be paid for by the contractor.

3.9.8 FINAL CONNECTION TO EXISTING MAINS

Water mains and appurtenances must be completely installed, flushed and disinfected and satisfactory bacteriological sample results received prior to permanent connections being made to the active distribution system. Sanitary construction practices must be followed during installation of the final connection, so that there is no contamination of the new or existing water main with foreign material or groundwater. Once the waterline has been tested, approved and

City water is flowing through the pipe, only City personnel are authorized to shut down and charge the waterline.

A. Connections equal to or less than one pipe length. The new pipe, fittings, and valve(s) required for the connection may be spray-disinfected or swabbed with a minimum one percent solution of chlorine just prior to being installed if the total length of connection from the end of a new main to the existing main is equal to or less than 18 feet.

B. Connection greater than one pipe length. The pipe required for the connection must be set up aboveground, disinfected, and bacteriological samples taken as described above if the total length of connection from the end of a new main to the existing main is greater than 18 feet. After satisfactory bacteriological sample results have been received for this 'pre-disinfected' pipe, the pipe can be used in connecting the new main to the active distribution system. Between the times that satisfactory bacteriological sample results are received and the time the connection piping is installed, the ends of this piping must be sealed with plastic wraps or watertight plugs or caps.

3.9.9 DISINFECTION PROCEDURES WHEN CUTTING INTO OR REPAIRING EXISTING MAINS

The following procedures apply primarily when existing mains are wholly or partially dewatered. After the appropriate procedures have been completed, the existing main may be returned to service prior to completion of bacteriological testing in order to minimize the time customers are out of water. Leaks or breaks that are repaired with clamping devices while the mains remain full of pressurized water present little danger of contamination and require no disinfection.

A. Trench treatment. When an existing main is opened, either by accident or by design, the excavation will likely be wet and may be badly contaminated from nearby wastewater lines. Liberal quantities of hypochlorite applied to open trench areas will lessen the danger from such pollution. Tablets have the advantage in such a situation because they dissolve slowly and continue to release hypochlorite as water is pumped from the excavation.

B. Swabbing with hypochlorite solution. The interior of all pipe and fittings (particularly couplings and sleeves) used in making the repair shall be swabbed or sprayed with a one percent hypochlorite solution before they are installed.

C. Flushing. Thorough flushing is the most practical means of removing contamination introduced during repairs. If valve and hydrant locations permit, flushing toward the work location from both directions is recommended. Flushing shall be started as soon as the repairs are completed and shall be continued until discolored water is eliminated.

D. Slug chlorination. When practical, in addition to the procedures above, the section of main in which the break is located shall be isolated, all service connections shut off, and the section flushed and chlorinated as described previously in this Section, except that the dose may be increased as much as 300 mg/L and the contact time reduced to as little as 15 minutes. After chlorination, flushing shall be resumed and continued until discolored water is eliminated, and the water is free from noticeable chlorine odor.

E. Sampling. Bacteriological samples shall be taken after repairs are completed to provide a record for determining the procedure's effectiveness. If the direction of flow is unknown, then samples shall be taken on each side of the main break. If positive bacteriological samples are recorded, then the situation shall be evaluated by the City who will determine corrective action, and daily sampling shall be continued until two consecutive negative samples are recorded.

3.9.10 SPECIAL PROCEDURE FOR CAULKED TAPPING SLEEVES

Before a tapping sleeve is installed, the exterior of the main to be tapped shall be thoroughly cleaned and wiped down with a one percent hypochlorite solution. The interior surface of the sleeve, the annulus and other portions of the sleeve, which might come in contact with drinking water, shall also be lightly dusted with calcium hypochlorite powder prior to its installation.

3.9.11 TESTING FOR FIRE FLOW OR PRESSURE

In selected cases, the Engineering Department may require a check of the fire flow or pressure following construction. In such instances, the developer/contractor shall assist either the Public Services and Engineering departments or the South Jordan City Fire Department, as appropriate.

SECTION 3.10

WATER SYSTEM AND WORK AREA CLEAN-UP

3.10.1 FINAL PROJECT CLEAN-UP

During construction the Contractor must take care to not track dirt, mud or other debris from the construction site onto adjacent City streets or private property. Vehicles must either be washed down prior to leaving the construction site or the Contractor must employ a sweeper to clean the streets as needed. The details, penalties, etc. are contained in the City's Municipal Code.

Once all pipeline systems have been installed, pressure tested, chlorinated and flushed, the system can be field accepted provided the necessary clean-up has occurred. All structures including fire hydrants shall be properly painted where required and free from dirt, concrete or other spattered materials. Also, the work site will be cleaned of construction debris by the contractor. All private improvements damaged during construction shall be restored to at least the original condition of said improvements including but not limited to trees, shrubs, curbs, gutters, sidewalks, fences, grass, etc. Filled excavations in private property shall be neatly finished in a manner to facilitate natural drainage and eliminate hazards to persons or property. Also, all requirements of the Engineering Department, as appropriate, shall have been met. The project shall be left in a final condition which brings no discredit to the City.

SECTION 3.11

CROSS CONNECTIONS AND BACKFLOW PREVENTION

3.11.1 GENERAL

A cross connection is any physical connection or arrangement of piping or fixtures which may allow non-potable water or industrial fluids or other material of questionable quality to come in contact with potable water inside a distribution system. Bypass arrangements, jumper connections, insufficient air gaps, removable sections, swivel or change-over devices and other temporary or permanent devices through which, or because of which, backflow can occur are considered cross connections.

Cross connections may be regarded as direct or indirect. A direct connection is an arrangement whereby a safe water system is physically joined to any other system. An indirect connection is an arrangement whereby unsafe water or other substance may be blown, pulled by vacuum, or otherwise diverted into a safe water system.

To understand cross connection and backflow prevention, several other terms need definition. "Backflow" is generally defined as the flow of any liquids, gases or other substances into the distribution pipelines of a potable supply of water from any other source or sources than the intended one. For backflow to occur, two conditions must be present:

1. A link must exist between the potable and the non-potable system;
2. The resultant flow produced by the differential pressure must be toward the potable system. If both systems are at pressures greater than atmospheric (positive pressure), backflow due to "back-pressure" occurs. A pump, elevated tank, difference in grade or boiler can create a backpressure that is greater than the pressure in the potable system.

If the potable system is at a pressure less than atmospheric (negative pressure), the atmospheric pressure on the foreign liquid will force it toward the partial vacuum and "back-siphonage" occurs. Back-siphonage is the drawing up, or siphoning, of a liquid or material into a potable water system.

3.11.2 JURISDICTION, AUTHORITY, REFERENCES

South Jordan City requirements for backflow prevention are covered in the Municipal Code with additional reference to the regulations of the State's Plumbing Code. The developer/contractor should be familiar with the applicable sections of the Municipal Code.

The Water Superintendent or his/her authorized representatives, for the City is an individual within the Public Works Department, who is responsible for ensuring that the assemblies are properly installed, maintained and tested. The various protective assemblies are to be installed, maintained and tested by and at the expense of the property owner.

3.11.3 TYPES OF BACKFLOW PREVENTION

As described below, there are several different types of prevention protection assemblies. The "Reduced Pressure Principle Assembly" and "Double Check Valve" are used respectively to prevent backflow and back-siphonage. The "Air Gap" and "Pressure or Atmospheric Vacuum Breakers" are used for prevention of back siphoning.

A. Reduced Pressure Principle Assembly (RP): Commonly referred to as an RP or RPZ, this assembly consists of two independently acting check valves, together with an automatically operating pressure differential relief valve located between the two check valves. The first check valve reduces the supply pressure at a predetermined amount so that during normal flow, and at cessation of normal flow, the pressure between the two check valves shall be lower than the supply pressure. If either check valve leaks, the relief valve will discharge to atmosphere. This will maintain the pressure in the zone between the two check valves lower than the supply pressure. The unit also has two shutoff valves (one upstream and one downstream of the checks) and four properly located test cocks for field testing. This assembly requires testing by a state certified technician upon installation or repair and annually thereafter.

B. Reduced Pressure Principle Detector Check is specifically designed for use on fire protection systems that utilize culinary water and chemicals only pipeline installations. The assembly protects potable water supplies from possible contamination through cross connection to fire service pipelines by preventing the return of "degraded fire system waters" into the water distribution system. This unit is also used to detect leakage or unauthorized use of water from fire system lines, which usage is immediately registered on the low flow meter on the unit. This assembly requires testing by a State certified technician upon installation or repair and annually thereafter.

C. Double Check Valve: The double check valve assembly is composed of two single, independently acting check valves. The unit also has two tightly closing shutoff valves located at each end of the device and four properly located test cocks for field testing. This assembly requires testing by a state certified technician upon installation or repair and annually thereafter.

D. Double Check Detector Check: Specifically designed for use on fire protection systems that utilize culinary water only. The assembly protects potable water supplies from possible contamination through cross connection to the fire service pipelines by preventing the return of “degraded fire systems water” into the water distribution system. This unit is also used to detect leakage or unauthorized use of water from fire system lines, which usage is immediately registered on the low flow meter on the unit. This assembly requires testing by a State certified technician upon installation or repair and annually thereafter.

E. Air Gap: An air gap is a physical separation between the free flowing discharge end of a potable pipeline and an open or non-pressure receiving vessel. To have an acceptable air gap, the end of the discharge pipe has to be at least twice the diameter of the pipe above the topmost rim of the receiving vessel, but in no case can this distance be less than one inch. If the discharge pipe is cut at an angle to minimize splash the air gap must be measured from the middle of the angle.

F. Pressure Vacuum Breaker: The pressure vacuum breaker (PVB) is an assembly that contains within a single body, an internally loaded check valve and a loaded air opening valve which opens to admit air whenever the pressure within the body of the device approaches atmospheric. The body of the assembly has two tight closing shutoff valves and it is fitted with test cocks, appropriately placed, for testing the assembly. This assembly requires testing by a State certified technician upon installation or repair and annually thereafter.

G. Spill Proof Vacuum Breaker: The spill-proof vacuum breaker (SUB) is an assembly that contains within a single body an internally loaded check valve and an internally loaded air inlet valve located on the discharge side of the check valve. The body of the assembly has two tight closing shutoff valves and it is fitted with an appropriately located test cock and bleed/vent valve. This assembly requires testing by a State certified technician upon installation or repair and annually thereafter.

H. Atmospheric Vacuum Breaker: An atmospheric vacuum breaker (AVB) has a moving element inside, which during flow prevents water from spilling from the device and during cessation of flow, drops down to provide a vent opening. This device should not remain under pressure for long durations (over 12 hours) and it cannot have any valves downstream from it. This is not a testable device but should be inspected regularly for proper operation.

3.11.4 REQUIREMENTS

The following is provided:

A. Reduced Pressure Principle Assembly (RP)
General: Use where cross connections are known or probably will exist which cannot be eliminated and where the degree of severity is judged by the Water Superintendent or his/her representative, to warrant more than a double check valve.

Specific Examples:
1. Water service to industrial or commercial facilities where chemicals are used within the premises, which could potentially be harmful to the City system.
2. Water service to hospitals and doctors' offices for humans and animals.
3. All sprinkler and irrigation systems that connect to the culinary water system.
4. Fire sprinkler systems using chemical additives.
5. Water service to mortuaries.
6. Service connections to home or buildings which also use water from wells or auxiliary storage.

B. Reduced Pressure Principle Detector Check.
General: Use where fire service line that uses culinary water and chemicals

Specific Example:
1. Fire service line for sprinklerized building that uses chemicals

C. Double Check Valve Assembly

General: Use where a cross connection possibly exists where the substance would be objectionable, but not necessarily hazardous to health.

Specific Examples:

1. Service connections to homes or buildings where the meter connection is too large for a setter.
2. Water service to buildings, which use products, which might impart an objectionable taste, odor or color but would not be hazardous.
3. Food processing plants.
4. Low hazard water connections.

D. Double Check Detector Valve Assembly:

General: Use where there is no other meter between the water source and the fire service line that uses only culinary water and no chemical additives.

Specific Example:

1. Fire service line for a building using a sprinkler system.

E. Air Gap.

General: Use where there is a connection to any premise using a dangerous or toxic substance in toxic concentrations or sewer connections. The air gap shall be located as close as possible to the service inlet and all piping between the inlet and receiving tank shall be entirely visible, if these conditions can't be met, then use an RP assembly may be approved by the Water Superintendent.

Specific Example:

1. A commercial installation where an air gap is approved.
2. All connections to sewage or sewer drain lines.

F. Pressure Vacuum Breaker (PVB) or Spill Proof Vacuum Breaker (SVB)

General: This unit can only be used where only back-siphoning conditions apply. There can be no back-pressure. The unit can have shutoff valves downstream of the assembly. The PVB/SVB must be installed at least 12" (300 mm) above the highest outlet or tank.

Specific Example:

1. Chemical feeders installed on washing machines or janitor sinks.
2. Hose lines with down stream valves
3. Dishwashers, etc.

G. Atmospheric Vacuum Breaker (AVB).

General: There should be no possibility of back-pressure. This device cannot have any shutoff valves downstream of the device. It must be installed at least 6" (150 mm) above the highest outlet or tank.

Specific Example:

1. Washing machine, dishwasher, other miscellaneous equipment

3.11.5 INSTALLATION

A. General: In terms of installation, there is an essential difference between "service" and "internal" protection. Service protection is a backflow assembly installed outside of the building, but on the customer side of the meter (with the exception of the detector check valve, which doesn't have a meter). These assemblies are specifically intended to protect the City water system regardless of other protective assemblies or devices inside the building.

   Internal protection devices are installed within the building or facility at each point of cross connection.

B. Service Protection Assemblies. The owner/developer submits drawings of the building to the Building Department, which may require an outside or service protection assembly. Also, the Public Works Department's Cross Connection Control officer may require service protection after a survey of the facility once under construction or occupied unless internal cross connections are abated to the satisfaction of the Cross-Connection Officer. In either case, the owner/developer should make arrangements with the Cross Connection Control officer for inspection.

   Once installed, the assembly will be recorded on the cross connection control records and tested as discussed in Section 12.7.

C. Internal Protection. The installation of these assemblies and devices falls under the jurisdiction of the Building Department and as approved to the satisfaction of the Engineering Department.

3.11.6 APPROVED DEVICES

The listing of the current approved backflow prevention assemblies is issued by the Utah Department of Environmental Quality, Division of Drinking Water and is available through their office. The City's Water Division may also be consulted for the currently approved list.

3.11.7 TESTING AND MAINTENANCE

All backflow prevention assemblies are to be tested annually by a state certified tester and tested following all repairs or maintenance. Owners of all assemblies that have been recorded on Public Works Department records will be notified yearly of this responsibility and a form must be completed by the tester and returned to the Public Works Department.

All backflow prevention assemblies must be tested within ten (10) working days of initial installation. The owner should notify the City within twenty-four (24) hours of installation.

SECTION 3.12

RESERVOIRS AND PUMPING STATIONS

3.12.1 GENERAL

Reservoirs or storage tanks work in conjunction with the pipeline and pumping stations to supply water for both the domestic and fire fighting purposes. These facilities must be designed for reliability. They must also be designed to be aesthetically pleasing with emphasis on minimization of their visibility, particularly with regards to any visual corridor. This section is not a design document; rather, it is a limited discussion of a few key points.

3.12.2 RESERVOIR STORAGE

Reservoir storage is made up of two components; emergency storage and regulatory storage. Emergency storage includes a sufficient volume to supply the highest anticipated fire flow within a particular zone. Regulatory storage is the volume required to supply the withdrawals from the system, which exceed the average rate of water production (or inflow).

The emergency storage can be calculated by identifying the single highest fire flow demand in accordance with the guidelines of the South Jordan City Fire Department.

Regulatory storage is a function of the ultimate population served and the conversion of average uses to maximum daily uses.

3.12.3 RESERVOIR STRUCTURAL DESIGN

Reservoirs (tanks) must be designed to withstand all expected forces internal pressure, wind load, earthquake load, the dead load of the structure and the live loads of the water when completely filled.

For steel tanks, AWWA is the applicable standard for the welded tanks and is the applicable standard for factory coated bolted steel tanks.

Reinforced concrete or pre-stressed concrete reservoirs are to be designed to the standards of the American Concrete Institute (ACI).

3.12.4 GENERAL RESERVOIR DESIGN PARAMETERS

A. All new reservoirs shall be located below ground.

B. All reservoirs shall have an altitude valve with a bypass.

C. All new reservoirs shall have ladders with safety cages.

3.12.5 PUMPING STATION DESIGN

Pumping stations shall be designed with at least two pumps so that at least one unit can be considered a standby unit. Further, in any station, the required pumping capacity must be met with one pump of the largest size out of service.

Each pump station shall be capable of supplying the maximum daily flow plus that flow necessary to replace one full fire flow storage in a period of 72 hours (3 days). Each pump station will have one standby pump with a capacity of the largest undivided pump at that station. At every pump station it is required that a control system be set up so that each pump operates approximately the same amount of time in any given period. Pump motors shall be of the high efficiency variety wherever it can be shown that the extra cost for the motor is less than the present value of 15 years of reduced energy costs.

3.12.6 SYSTEM CONTROL AND DATA ACQUISITION (SCADA) SYSTEM

All reservoir levels and key pumping station parameters (i.e., pump run, pump call, pump off, flow rate, pump hours, valve malfunctions, etc.) are telemetered by the Public Works Department which houses the SCADA computer and central control.

3.12.7 PRESSURE REDUCING STATIONS/FLOW CONTROL STATIONS

Pressure Reducing or Regulating Valves (PRV) are utilized to control pressures between distribution zones within the distribution system. The Engineering or Water Department may choose an FCV application depending on system needs. When water main extension plans are submitted for review and water availability analysis, the need for a PRV or FCV installation will be determined and located based on existing pressure zones and the existing distribution system layout on a case-by-case basis to be determined by the Engineering and Water Departments. In certain situations, the water department shall require monitoring of the valve(s) and vault via SCADA equipment. SCADA equipment shall be designed and purchased through Siemens Water Technologies with preapproval from the Water Department on final product. For RTU cabinet and pedestal design see details.

Cla-val or preapproved equivalent shall be used in all main line pressure reducing or flow control applications. Appurtenances shall include stainless steel pilot valves, a position indicator with site glass, speed valves for both open and closed applications, brass or SS 'Y' type strainers, glycerin filled pressure gauges on both high and low side of the PRV valve, and applicable valves on all appurtenances. All plumbing on top of PRV and FCV valves must be stainless steel. Isolation ball valves must accompany all gauge lines. An in line tee shall be between the gauge isolation valve and the gauge; a hose bib shall be installed at the tee. The PRV shall have upstream and downstream isolation valves on the inside of the vault.

SECTION 3.13

WATER SYSTEM MODELING REQUIREMENTS

A water system model will be required on all final plan reviews. The following guidelines are provided.

3.13.1 Modeling Instructions

A. In order to conduct hydraulic modeling, the developer will need to contact the City Water Division (801) 253-5230 to make arrangements to field test the water pressure at the site. The lower pressure between the field-test pressure and the pressure zone map (attached to this document and on the city website) should be used for design. The development engineer can assume that this source node serves as a fixed grade node or tank supply. Hydraulic modeling results will be provided to the City as part of the final development review submittal.

B. City staff will integrate the development water model within the overall City system water model and evaluate the proposed development to ensure that the proposed development meets the required hydraulic conditions. In the event that development creates additional upstream impacts from the City supplied source node, the development engineer may be required to work with the City to identify appropriate system improvements to adequately serve development needs.

3.13.2 Deliverables

- The developer must submit an electronic version of the water model in the most updated version of EPANET or WaterCAD.
- The water model must contain ***five (5) scenarios*** showing Peak Instantaneous Flows, Peak Day Flows, Average Day Flows, Low Demand Flows, and Peak Day with Fire Flows.
- A report containing applicable spreadsheets showing all calculations stamped and signed by a Professional Engineer.
- A Utility Plan (11” X 17” is fine) containing waterline plans for the site.
- A Vicinity or Site Map of the area under review.

3.13.3 Demand Summation

For purposes of compiling the projected demand of any given development, calculate and compile the demand associated with each component noted above. The developer must provide a spreadsheet summary that identifies each demand component and sums the total demand components for each flow condition required for modeling.

3.13.4 Scenario Demand Assumptions

For Pressure Zones 1,2,3: (See attached map)

Flow Demand Scenario	Peaking Factor	Recommended Values for Water Demand Modeling
Average Daily (ADF)	1.0	0.5 gpm/ERC (Equivalent Residential Connection)
Peak Daily (PDF)	2.3	1.15 gpm/ERC
Peak Instantaneous (PIF)	4.6	2.3 gpm/ERC
Low Demand	0.4	0.2 gpm/ERC

For Pressure Zones 4,5,6: (See attached map)

Flow Demand Scenario	Peaking Factor	Recommended Values for Water Demand Modeling
Average Daily (ADF)	1.0	0.4 gpm/ERC
Peak Daily (PDF)	2.3	0.92 gpm/ ERC
Peak Instantaneous (PIF)	4.6	1.84 gpm/ ERC
Low Demand	0.4	0.16 gpm/ ERC

3.13.5 Fire Flow Demand Assumptions

Fire Flow Demand Condition	Required Flow	Required Duration
Small Residential (< 3600 SF)	1000 gpm	2 hours
Large Residential (> 3600 SF)	1750 gpm	2 hours
Other Uses	As determined by Fire Marshal on a case by case basis.	As determined by Fire Marshal on a case by case basis.

3.13.6 Non-Residential Assumptions per Land Use Type

In some instances there could be a land use type incorporated within a development that will require consideration within demand allocations. For example, a park or open space area contained within a residential development. In order to consider these types of uses, the following conversion table is provided to estimate flows.

Future Land Use Designation	Average Day Demands (Multiply by Peaking Factor for Different Scenarios)
C-C,C-N, C-F (Commercial)	2.0 gpm/acre*
MN-RD, M-U south, MU-Gate, M-UN Gate, MU-Comm, M-U city, BH-MU (Mixed Use)	2.6 gpm/acre*
PC (Large Master Planned Com)	1.73 gpm/acre*
OS (Office Space)	1.22 gpm/acre*
CI, IF (Industrial)	2.0 gpm/care*

*Based on the South Jordan City Culinary Water Master Plan dated September of 2006.

3.13.7 Demand Summation

For purposes of compiling the projected demand of any given development, calculate and compile the demand associated with each component noted above. The developer must provide a spreadsheet summary that identifies each demand component and sums the total demand components for each flow condition required for modeling.

3.13.8 Flow Modeling Assumptions

A. The hydraulic model must be compiled in a data format compatible with either EPANET or WaterCAD. EPANET was chosen for use by the City due to the fact that it is public domain software and may be acquired free of charge. In order to obtain the software, please access one of the two sources below:

1. This software is available online at the following URL:
   http://www.epa.gov/ORD/NRMRL/wswrd/epanet.html
2. The software is also available on CD from the South Jordan City Water Division at a cost of $5.00 (to cover the cost of reproduction).

B. In completing the modeling, the development engineer will need to demonstrate that a number of conditions are met with the original model.

1. Demonstrate that dynamic pressures within any portion of the pipe network do not drop below 20 psi at any time.

2. Demonstrate that pipe velocities under Peak Day and Peak Instantaneous conditions do not exceed 7 feet per second (fps).

CHAPTER 4
LANDSCAPE AND IRRIGATION

(Updated 3-6-18)

SECTION 4.1
GENERAL

4.1.1 SUMMARY

Work to be done includes all labor, materials, equipment and services required to complete the Project irrigation system as indicated on the Construction Drawings, and as specified herein. Includes but is not limited to: furnishing and installing underground and above ground sprinkler system complete with any accessories necessary for proper function and operation of the system. All plant material on the Project shall be irrigated. Removal of existing sprinkler system components disturbed during construction process. Existing components removed shall be turned over to City. Restoration of existing landscape will be to original state and condition.

4.1.2 RELATED WORK

The following item(s) of related work are specified and included in other sections of the City's specifications. Section headings and reference numbers may not correspond exactly.

A. Section 01815 – Testing

B. Section 02200 – Earthwork

C. Section 02900 – Planting

D. Section 02910 – Seeding

E. Section 02915 – Sodded Lawns

F. Section 02920 – Landscape Fine Grading

G. Section 02930 – Soil Preparation

H. Section 02970 – Landscape Maintenance

I. Section 16000 – Electrical

4.1.3 SYSTEM DESCRIPTION

A. Design of irrigation components: Locations of irrigation components on Construction Drawings may be approximate. Piping, sleeving and/or other components shown on Construction drawings may be shown schematically for graphic clarity and demonstration of component groupings and separations. All Irrigation components shall be placed in landscaped areas, with the exception of pipe and wire in sleeving under hardscapes.

B. Construction requirements: Actual placement may vary as required to achieve a minimum of 100% coverage without overspray onto hardscape, buildings or other features.

C. Layout of Irrigation Components: During layout and staking, consult with Owner's Representative to verify proper placement of irrigation components and to provide Contractor recommendations for changes, where revisions may be advisable. Small or minor adjustments to system layout are permissible to avoid existing field obstructions such as utility boxes or street light poles. Contractor shall place remote control valves in groups as practical to economize on quantity of valve clusters. Quick coupler valves shall be placed with valve groups as shown on plans.

4.1.4 DEFINITIONS

A. Point of Connection: Location where the Contractor shall tie into the water supply; may require saddle, nipples, spools, isolation valves or Stop & Waste valve for landscape irrigation needs and use.

B. Main Line Piping: Pressurized piping downstream of the Point of Connection to provide water to remote control valves and quick couplers, normally under constant pressure.

C. Lateral Line Piping: Circuit piping downstream of remote control valves to provide water to sprinkler heads, drip systems or bubblers.

4.1.5 REFERENCES

The following standards will apply to the work of this Section:

A. ASTM – American Society for Testing and Materials

B. NFPA 70 – National Electric Code (NEC)

C. IA – The Irrigation Association: Main BMP Document, Landscape Irrigation Scheduling and Water Management Document.

D. ASIC – American Society of Irrigation Consultants: ASIC Grounding Guideline.

E. South Jordan City – codes, ordinances, plans and specs

4.1.6 SUBMITTALS

At least thirty (30) days prior to ordering of any materials, the Contractor shall provide manufacturer catalog cut sheet and current printed specifications for each element or component of the irrigation system. Submittals shall be in three ring binders or other similar bound form. Provide five copies of submittals to South Jordan City and Landscape Architect for distribution to Irrigation Designer. Place cover or index sheet indicating order in submittal document. No material shall be ordered, delivered or any work preceded in the field until the required submittals have been reviewed in its entirety and stamped approved. Delivered material shall match the approved samples.

A. Operation and Maintenance Manual:

1. Prior to final acceptance, the Contractor shall provide Operation and Maintenance manual to South Jordan City, containing:

   a. Manufacturer catalog cut sheet and current printed specifications for each element or component of the irrigation system.

   b. Parts list for each operating element of the system.

   c. Manufacturer printed literature on operation and maintenance of operating elements of the system.

   d. Section listing instructions for overall system operation and maintenance. Include directions for Spring Start-up and Winterization.

B. Project Record Copy:
Maintain at project site one copy of all project documents clearly marked “Project Record Copy”. Mark any deviation in material installation on Construction drawings. Maintain and update drawing at least weekly. Project Record Copy to be available to South Jordan City on demand.

C. Completed Project As-built Drawings:

1. Prior to final inspection, prepare and submit to South Jordan City accurate as-built drawings.

2. Show detail and dimension changes made during installation. Show significant details and dimensions that were not shown in original Contract Documents.

3. Field dimension locations of sleeving, points of connection, main line piping, wiring runs not contained in main line pipe trenches, valves and valve boxes, quick coupler valves.

4. Dimensions are to be taken from permanent constructed surfaces, features or finished edges located at or above finished grade.

D. Controller map:
Upon completion of system, place in each controller, a color-coded copy of the area that controller services; indicating zone number, type of plant material and location on project that zone services. Laminate map with heat shrink clear plastic.

4.1.7 QUALITY ASSURANCE

A. Acceptance:
Do not install work of this section prior to acceptance by Landscape Architect of area to receive such work.

B. Regulatory requirements:
All work and materials shall be according to any and all rules, regulations or codes, whether they are State or Local laws and ordinances. Contract documents, drawings or specifications may not be construed or interpreted to permit work or materials not conforming to the above codes.

C. Adequate water supply:

1. Connections to water supply lines shall be by Contractor or Developer. Verify that proper connection is available to supply line, and is of adequate size. Verify that secondary connection components may be installed if necessary. Perform static pressure test prior to commencement of work.

2. Notify South Jordan City in writing of problems encountered prior to proceeding.

D. Workmanship and Materials:

1. It is the intent of this specification that all material herein specified and shown on the construction documents shall be of the highest quality available and meeting the requirements specified.

2. All work shall be performed in accordance with the best standards of practice relating to the trade.

E. Contractor Qualifications:

1. Contractor shall provide document or resume including at least the following items:

   a. Contractor is licensed to perform landscape construction in the State of Utah.

   b. References of five projects of similar size and scope completed within the last ten years.

   c. Listing of suppliers where materials will be obtained for use on this Project.

d. Project On-site Foreman or Supervisor has at least five consecutive years of commercial irrigation Installation experience. This person shall be a current Certified Irrigation Contractor in good standing as set forth by the Irrigation Association. This person shall be on Project site at least 75% of each working day.

e. Evidence that Contractor currently employs workers in sufficient quantities to complete Project within time limits that are established by the Contract.

f. All General laborers or workers on the Project shall be previously trained and familiar with sprinkler installation, and have a minimum of one-year experience.

4.1.8 DELIVERY STORAGE HANDLING

During delivery, installation and storage of materials for Project, all materials shall be protected from contamination, damage, vandalism and prolonged exposure to sunlight. All material stored at Project site shall be neatly organized in a compact arrangement and storage shall not disrupt Project Owner or other trades on Project site. All material to be installed shall be handled by Contractor with care to avoid breakage or damage. Damaged materials attributed to Contractor or Developer shall be replaced with new at Contractor's or Developer's expense.

4.1.9 SEQUENCING

Perform site survey, research utility records, contact utility location services. The Contractor shall familiarize himself with all hazards and utilities prior to work commencement. Install sleeving prior to installation of concrete, paving or other permanent site elements. Irrigation system Point of Connection components, backflow prevention and pressure regulation devices shall be installed and operational prior to all downstream components. All main lines shall be thoroughly flushed of all debris prior to installation of Remote Control Valves. All lateral lines shall be thoroughly flushed of all debris prior to installation of any sprinkler heads. Irrigation Contractor shall be required to submit detailed Construction Schedule to South Jordan City prior to commencement. Schedule shall be updated weekly.

4.1.10 WARRANTY

Contractor shall provide one year Warranty. Warranty shall cover all materials, workmanship and labor. Warranty shall include filling and or repairing depressions or replacing turf or other plantings due to settlement of irrigation trenches or irrigation system elements. Valve boxes, sprinklers or other components settled from original finish grade shall be restored to proper grade. Irrigation system shall have been adjusted to provide proper, adequate coverage of irrigated areas.

4.1.11 OWNER'S INSTRUCTION

After system is installed, inspected and approved, instruct South Jordan City in complete operation and maintenance procedures. Coordinate instruction with references to previously submitted Operation and Maintenance Manual.

SECTION 4.2
PRODUCTS

4.2.1 GENERAL NOTES

Contractor or Developer shall provide all materials to be used on this Project, as shown on the construction drawings.

4.2.2 APPROVED PARK FURNISHINGS

A. Below is a list of approved furnishings in a City Park. Other products may be acceptable if prior approval is given by South Jordan City Parks Department.

1. Bollards – Product: Urban Accessories Model: San Jose – powder coated black.

2. Sport Field Lighting – Product: Musco Lighting, compatible with existing city systems

3. Benches – Product: Premier Site Furnishings Model: Mountain Maple Bench – MM600RB, with custom city logo

4. Trash Receptacles – Product: Premier Site Furnishings Model: Oak Trash Receptacle 0144, with custom city logo

5. Drinking Fountains – MDF

6. Park Signs – Product: Custom Design Model: Level I (large scale parks), Level II (standard park design), Level III (mainly trail use) Drawings to be provided for Level I

4.2.3 POINTS OF CONNECTION

A. Contractor shall make use of existing pipes at or near the locations shown. Verify pipe size through South Jordan Parks or Water Department personnel or by field 'pothole'.

1. Order of installation shall proceed as follows:
   a. Field adapt connection as necessary to existing conditions. Components shall be brass or bronze.

b. Install new Stop & Waste, which shall have brass nipples not less than 6” long on either side. Pipe main from downstream nipple elevation to 18” depth.

c. Install Backflow Prevention device.

d. Install Master valve/flow meter combination.

e. Install quick coupler downstream of meter.

2. Components shall be installed per Construction Documents and details; specifications designated in this section and Manufacturer’s recommendations.

B. Configuration, location and installation of POC and POC components shall be arranged such that distance from City main to downstream side of Master valve shall be as short as possible.

4.2.4 CONTROL SYSTEM

A. Power supply to irrigation controller **shall** be completed by Contractor or Developer.

B. Controller power wire for pedestal controllers shall be: Paige Electric Co., model number P7266D, 12AWG, 2 or 3 conductor w/ground tray cable, direct bury. **NO SUBSTITUTIONS**. All power cables are type Tray Cable; shall be UL listed for direct burial, and rated at 600 volts. The cable shall include three conductors, which are to be colored or numbered as 1, 2, and 3, and shall be color-coded (using 3M #35 Vinyl Electrical Color Coding Tape) to code and electrical industry standards.

The size of the "hot" and "common" conductors are to be as shown on the irrigation plans, and the size of the "ground" conductor as required by the National Electrical Code, or larger. The inner copper conductors shall be insulated with high dielectric PVC and Nylon. The outer jacket will be black PVC and is to be sunlight resistant. Paige Electric Co., LP specification number P7266D for 10 AWG and smaller and specification number P7267D for 8 AWG and larger.

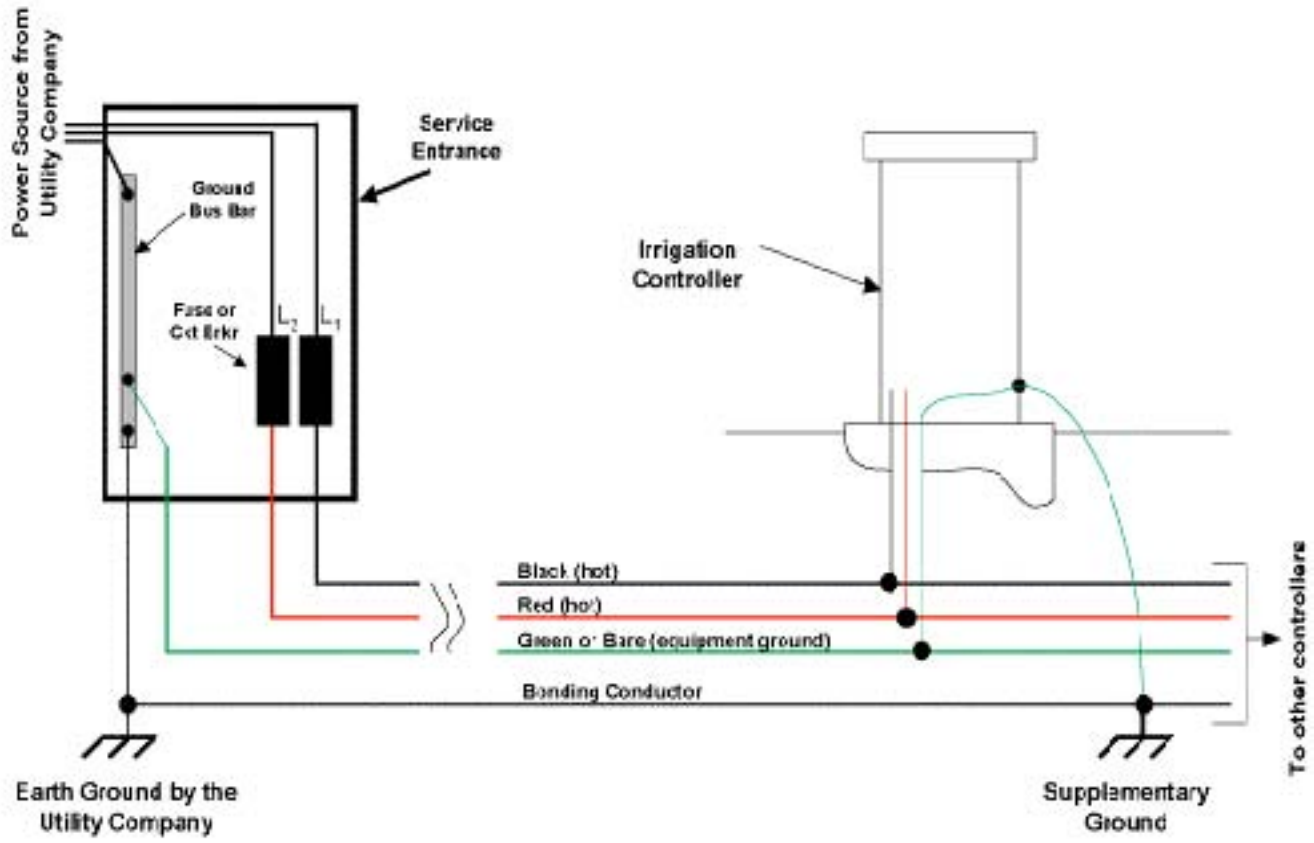

C. Earth Grounding

1. It is the responsibility of the installer to connect all electronic irrigation equipment for which he is responsible, to earth ground in accordance with Article 250 of the National Electrical Code® (NEC®.) Use grounding electrodes that are UL® listed or manufactured to meet the minimum requirements of Article 250 of the latest edition of the NEC® as adopted by the state of Utah. At the very minimum, the grounding circuit will include a copper clad steel ground rod, a solid copper ground plate and 100 pounds of PowerSet® earth contact material, as defined below and per the following detail. This detail is the minimum requirement for supplementary grounding of any electronic equipment.

2. The ground grid components must be installed with the dimensional relationships shown in the detail above. WIRES, CABLES, AND ELECTRONIC EQUIPMENT MUST BE INSTALLED OUTSIDE "THE SPHERE OF INFLUENCE" OF THE GROUNDING ELECTRODES.

3. Ground rods are to have a minimum diameter of 5/8" and a minimum length of 10 feet. These are to be driven into the ground in a vertical position or an oblique angle not to exceed 45 degrees at a location 10 feet from the electronic equipment. The rod is to

be stamped with the UL® logo [Paige Electric part number 182007.] A 6 AWG solid bare copper wire (about 12 feet long) shall be connected to the ground rod by the installer using a Cadweld GR1161G ”One-Shot” welding kit [Paige Electric part number 1820037.] This wire shall be connected to the electronic equipment ground lug.

4. The copper grounding plate assemblies shall be 4” x 96” x 0.0625” [Paige Electric part number 182199L.] A 25-foot continuous length (no splices allowed unless using exothermic welding process) of 6 AWG solid bare copper wire is to be attached to the plate by the manufacturer using an approved welding process. This wire is to be connected to the electronic equipment ground lug. If the equipment ground lug only accepts one wire, connect the second wire to the first with a brass split bolt, as close to the equipment lug as possible. The ground plate is to be installed to a minimum depth of 30”, or below the frost line if it is lower than 30”, at a location 8 feet from the electronic equipment and underground wires and cables.

5. Two 50-pound bags of PowerSet® [Paige Electric part number 1820058] earth contact material must be spread so that it surrounds the copper plate evenly along its length within a 6” wide trench. Salts, fertilizers, bentonite clay, cement, coke, carbon, and other chemicals are not to be used to improve soil conductivity because these materials are corrosive and will cause the copper electrodes to erode and become less effective with time. Install all grounding circuit components in straight lines. When necessary to make bends, make sweeping turns, as shown. When connecting bare copper wire to the ground lug of electronic equipment, it must be fed through a dedicated 1.5” plastic sweep ell.

6. The earth-to-ground resistance of this circuit is to be measured using a Megger®, or other similar instrument, and the reading is to be no more than 10 ohms. If the resistance is more than 10 ohms, additional ground plates and PowerSet® are to be installed using ASIC Guidelines 100-2002 (www.asic.org, “Design Guides”.) It is required that the soil surrounding copper electrodes within the sphere of influence be kept at a minimum moisture level of 15% at all times.

7. All underground circuit connections are to be made using an exothermic welding process by utilizing products such as the Cadweld “One-Shot” kits. Solder shall not be allowed to make connections. In order to ensure proper ignition of the “One-Shot”, the Cadweld T-320 igniter must be utilized [Paige Electric part number 1820040.] The 6 AWG bare copper wires are to be installed in as straight a line as possible, and if it is necessary to make a turn or a bend it shall be done in a sweeping curve with a minimum radius of 8” and a minimum included angle of 90°. Mechanical clamps shall be permitted temporarily during the resistance test process, but are to be replaced with Cadweld “One-Shot” kits immediately thereafter.

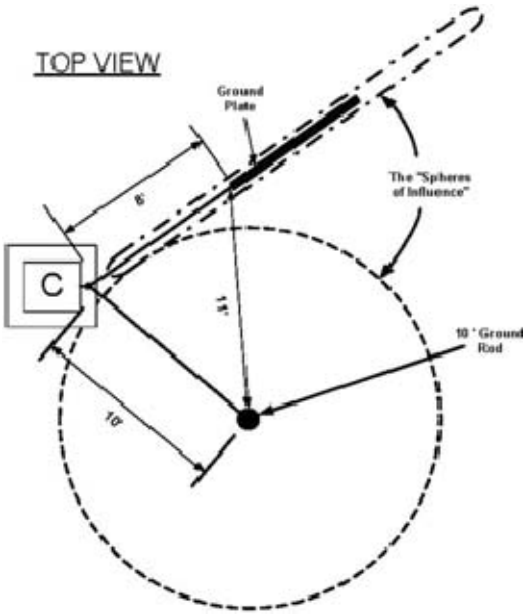

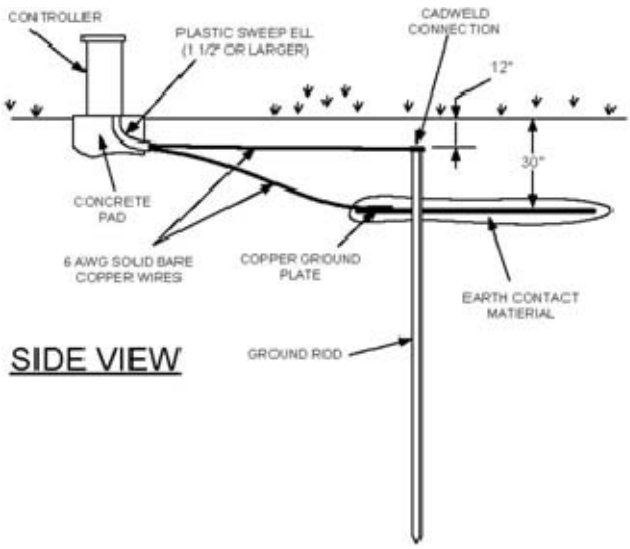

8. All grounding components must be connected to the equipment before any other connection is made.

D. Bonding/shielding

1. The bonding conductors are to be installed in such a way so that they also act as shielding conductors. This becomes a network of solid bare copper wire over all the main bundles of other wires and cables as shown in the detail below.

2. The bare copper wire is to be installed as close to the surface as possible, yet being sufficiently below the ground level as to prevent damage from maintenance equipment such as aerators. And it must be placed above all other valve / power / communication wires and cables, per detail, and installed in all trenches as shown on the electrical plan drawings. It is not necessary to install this conductor over short wire runs less than 150 feet) away from the main wire bundles. The conductor is laid in as straight a line as possible, and when necessary to make bends, do so in a sweeping motion using the following detail as a guideline.

3. Note: When connecting bare copper wires to the ground lug of electronic equipment, feed it through a dedicated 1 ½" plastic sweep to automatically meet the requirements of the “sweep bend" shown here.

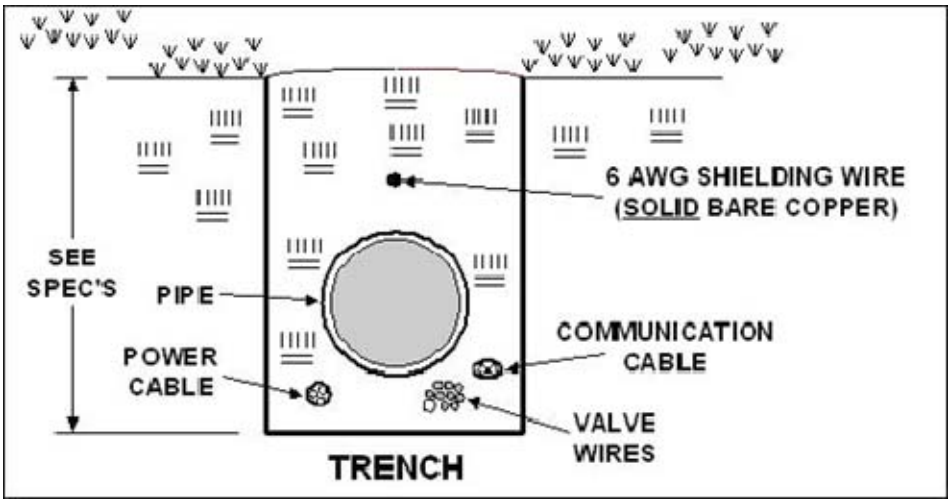

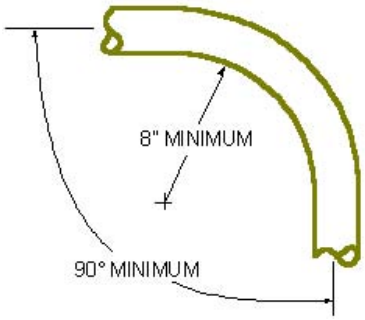

4. The shield network is to be connected to the service entrance earth ground, to all electronic equipment ground lugs, and all equipment supplementary grounding electrodes. One such network is necessary for each power source. Do not interconnect the equipment ground wires from different power sources. When joining bare copper wires, do so using an ERICO PG11L "One-Shot" kit as shown in the details below. [Paige Electric part number 1820074.]

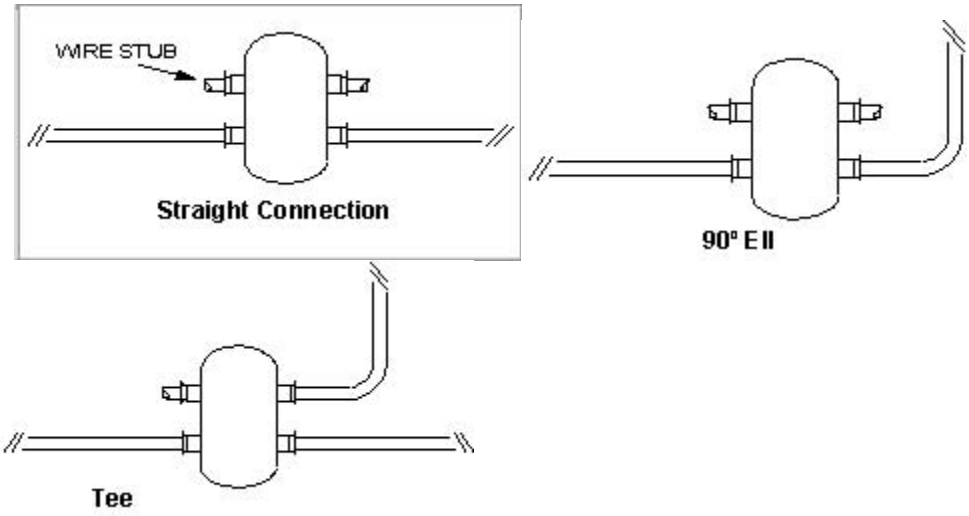

E. Controllers shall be Rain Bird Corporation LX Series Controllers. Controller shall be surge protected. Below are the required LX Series components for the IQ2 Central Control:

- ESP12LXMEF ***or*** ESP-LXD – 12 Station base model outdoor plastic cabinet traditional wire controller (LXMEF) and 50 Station Base model outdoor plastic cabinet two wire controller (LXD) respectively. Provide needed station modules to best suite each project. Use ESPLXMSM4, 8, and 12 expansion modules for traditional wire systems (LXMEF) and ESPLXD-SM75 for two wire systems (LXD).
- IQNCCGP – Cellular Communications Cartridge
- IQEXTANTGP – External Cellular Antenna
- WR2-RFC – Wireless Rain Freeze Sensor
- FS Series Flow Sensors – Sized appropriately for project. Specify models as follows. FS (flow sensor) 200 (2”) B (brass or P for plastic). Brass models has sizes of 100 (1”), 150 and 200. Plastic model has sizes of 050 (.5”), 075 (.75”), 100 (1”), 150, 200, 300, and 400. Flow sensor shall connect to controller using PE communication cable.

1. Power configuration for pedestal controllers shall be 240 VAC or 120VAC. Wall mount type controller shall be 120 VAC. Install wall mount controllers within buildings or within Strong Box Combination Meter Base.

2. Controller shall be as indicated on Construction Drawings. Locate Controller in general location shown on Construction drawings. Contractor shall be responsible for all power connections to Controller. Contractor shall be responsible for electrical or other Project trades as needed to facilitate installation of power to controllers.

3. All new irrigation system installations shall have a power source hardwired to the irrigation controller. Where possible an existing city power source may be used, if authorized by the Parks Department, otherwise, the installation of a power meter will be required. Battery operated controllers are not allowed unless approved by the Associate Director of Parks and Recreation.

F. Wires connecting the remote control valves to the irrigation controller are single conductors, type PE, Paige Electric Co., LP specification number P7079D. NO SUBSTITUTIONS. Wire construction shall incorporate a solid copper conductor and polyethylene (PE) insulation with a minimum thickness of 0.045 inches. The wires shall be UL listed for direct burial in irrigation systems and be rated at a minimum of 30 VAC.

1. A minimum of 24” of additional wire shall be left at each valve, each splice box and at each controller.

2. Common wire shall be white in color, 12 gauge. Control wire shall be red in color, 14 gauge. Spare wire shall be blue in color, 14 gauge.

3. One spare wire from every valve grouping containing three or more valves shall be ‘home run’ to the controller. Install at least one spare wire for every five valves. Total number of spare wires shall not be less than 1/5th of the total control valves installed. Spare wire shall be looped within each valve box of the grouping it is to service.

G. RCV wire splicing connectors shall be 3M brand DBY or DBR. NO SUBSTITUTIONS. Wire splicing between controller and valves shall be avoided if at all possible. Any wire splices shall be contained within a valve box. Splices within a valve box that contains no control valves shall be stamped ‘WIRE SPLICE’ or ‘WS’ on box lid.

H. Communication wire/Sensor wire shall be Paige brand, model 7171D or P7315D (PE 39). NO SUBSTITUTIONS. Wire splicing or connection shall be made using Paige brand, model 273211 (3M SliC) and Paige brand, model 270228R (3M 316IR). NO SUBSTITUTIONS.

4.2.5 SLEEVING

Contractor shall be responsible to protect existing underground utilities and components. Sleeving minimum size shall be 2”. Sleeving 2” through 4” in size shall be S/40 PVC solvent weld. Sleeving 6” and larger shall be CL 200 PVC gasketed. Sleeve diameter shall be at least two times the diameter of the pipe within the sleeve. Sleeves shall be extended 6” minimum beyond walk or edge of pavement. Wire or cable shall not be installed in the same sleeve as piping, but shall be installed in separate sleeves. Sleeve ends on sleeve sizes 4” and larger shall be capped with integral, corresponding sized PVC slip cap, pressure fit, until used, to prevent contamination. Sleeve ends on sleeve sizes 3” and smaller may be thoroughly taped to prevent contamination. Sleeves shall be installed at appropriate depths for main line pipe or lateral pipe.

4.2.6 MAIN LINE PIPE

All main line pipe 4” and larger shall be Class 200 gasketed bell end. All main line pipe 3” in size and smaller shall be Schedule 40 PVC solvent weld bell end.
Maximum flows allowed through main line pipe shall be:

22 GPM---1-1/4” pipe
30 GPM—1-1/2” pipe
50 GPM—2” pipe
75 GPM---2-1/2” pipe
100 GPM—3” pipe
200 GPM—4” pipe
400 GPM—6” pipe
Main line pipe shall be buried with 18” cover.

4.2.7 MAIN LINE FITTINGS

All main line fittings 3” and larger shall be gasketed ductile iron material. All ductile iron fittings having change of direction shall have proper concrete thrust block installed. All main line fittings smaller than 3” in size shall be Schedule 80 PVC.

4.2.8 ISOLATION VALVES

A. Isolation valves 3” and larger shall be Waterous brand model 2500 cast iron gate valve, resilient wedge, push on type, with 2” square operating nut. Place sleeve of 6” or larger pipe over top of valve vertically and then extend to grade. Place 10” round valve box over sleeve at grade. See detail for additional information.

B. Isolation valves 2-1/2” and smaller shall be Apollo brand 70 series brass ball valves, contained in a Carson Standard size valve box. Valves shall be installed with S/80 PVC TOE Nipples one both sides of valve. Valve shall be placed so that the shut of handle is on the side rather the top of the valve. Valve shall be placed so that the handle is vertical toward the top of the valve box in the closed position.

4.2.9 MANIFOLDS

Action Manifold fittings shall be used to create unions on both sides of each control valve, allowing the valve to be removed from the box without cutting piping. Valves shall be located in boxes with ample space surrounding them to allow access for maintenance and repair. Where practical, group remote control valves in close proximity. See remote control valve manifold detail for more information.

4.2.10 REMOTE CONTROL VALVES

Remote control valves shall be Rain Bird brand, PESB-PRS-D or 300-BPE-PRS-D. Master Valves shall also be Rain Bird brand or as designated on plans. Remote control valves shall be located separately and individually in separate control boxes.

1. Flows through 1” valves shall be 1-25 GPM.
2. Flows through 1-1/2” valves shall be 26-50 GPM.
3. Flows through 2” valves shall be 51 through 75 GPM.
4. Flows through 3” valves shall be 76 GPM through 200 GPM.

4.2.11 MANUAL CONTROL VALVES

Quick coupler valves shall be Rain Bird brand, model 44-LRC 1” acme thread quick coupler. Quick coupler valve shall be attached to the main line using a Lasco G17S212 swing joint assembly with snap-lok outlet and brass stabilizer elbow. Quick coupler valve shall be placed within a Rain Bird 10” round valve box (VB-10RND). Top of quick coupler valve cover shall allow for complete installation of valve box lid, but also allow for insertion and operation of key. Base of quick coupler valve and top of quick coupler swing joint shall be encased in ¾”- gravel. Contractor shall place quick coupler valves as shown on plan. Quick coupler valves are not protected by an isolation valve. Quick coupler valve at POC shall not be eliminated or relocated.

4.2.12 LATERAL LINE PIPE

All lateral piping shall be Schedule 40 PVC, solvent weld, and bell end. Lateral pipe shall be buried with 12” of cover typically. Lateral pipe shall be 1”, 1-1/4”, 1-1/2” or 2” in size as indicated on Construction Drawings.
Maximum flows allowed through lateral pipe shall be:

13 GPM—1” pipe
22 GPM---1-1/4” pipe
30 GPM—1-1/2” pipe
50 GPM—2” pipe
75 GPM---2-1/2” pipe
No other pipe sizes shall be used on this Project.

4.2.13 LATERAL LINE FITTINGS

All lateral line fittings shall be S/40 PVC.

4.2.14 BUBBLER SPRINKLERS

Bubbler sprinklers shall be Rain Bird brand Root Watering System, model RWS-M-BCG. Where indicate on Construction Documents, place 3 equilaterally per tree.

4.2.15 SPRAY SPRINKLERS

Spray head sprinklers shall be Rain Bird brand, model RD1800-S-PRS. Nozzles shall be Rain Bird brand (see below for list of nozzles). Contractor shall use appropriate pressure regulation heads for selected nozzles: RD1800-S-P30 for spray nozzles and RD1800-S-P45 for rotary nozzles. Contractor shall use fixed spray wherever possible. Adjustable nozzles shall only be used where a fixed spray option is not available. Swing joint assembly shall be Rain Bird TSJ-075-PRS or TSJ-100-PRS or composed of the following: Two ½” spiral barb elbows, 12-24”

swing pipe, one M412-005 ½” marlex street 90.
The following high efficiency spray body nozzles are approved for use:

1. Rain Bird HE-VAN spray nozzles (8’, 10’, 12’ and 15’ models)
2. Rain Bird U-Series spray nozzles (8’, 10’, 12’ and 15’ models)
3. Rain Bird R-Series rotary nozzles (13’-18’ and 17’-24’ models)
4. Rain Bird R-VAN Series rotary nozzles (13’-18’ and 17’-24’ models)

4.2.16 MID SIZE ROTOR SPRINKLERS

A. Mid size rotor head sprinklers shall be Rain Bird brand.

1. Model 5004PLSRSS, stainless steel stem rotor with check valve and pressure reducing stem installed for 4” pop-ups.

2. Model 5006PLSRSS, stainless steel stem rotor with check valve and pressure reducing stem installed for 6” pop-ups.

3. Model 50012PLSR, vinyl stem rotor with check valve and pressure reducing stem installed for 12” pop-ups.

4. Model 5000SPLS, vinyl stem shrub rotor with check valve installed.

B. Contractor shall install nozzles designated on Construction Documents as appropriate for coverage and uniformity.

C. Swing joints for mid size pop-up rotors shall be Rain Bird TSJ-12-075 or TSJ-12 or be composed of the following: One 12” S/80 threaded nipple (extruded, cut and threaded—not molded), and three marlex street elbows (one at the fitting, two at the base of the rotor).

D. Swing joints for mid size shrub rotors shall be Rain Bird TSJ-075-PRS or TSJ-100-PRS or be composed of the following: two marlex street elbows at the PVC tee or elbow, one S/80 nipple not less than 24”, one rotor stake kit, one ½” rebar, length as needed.

4.2.17 LARGE ROTOR SPRINKLERS

A. Large rotor head sprinklers shall be Rain Bird brand, model 5005SS or 8005SS, stainless steel, stem rotor with check valve installed.

B. Contractor shall install nozzles designated on Construction Documents as appropriate for coverage and uniformity.

C. Swing joints shall be Rain Bird TSJ-075-PRS or TSJ-100-PRS or be composed of the following: One 12” S/80 threaded nipple (machined, cut and threaded—**not molded**), and three marlex street elbows (one at the fitting, two at the base of the rotor).

4.2.18 VALVE BOXES

Carson valve boxes (or approved substitution) shall be used on City projects. Sizes are as directed in these Specifications, detail sheets or plan sheets. Valve boxes shall be centered over the control valve or element they cover. Valve box shall be sized large enough to allow ample room for service access, removal or replacement of valve or element. Valve box shall be set to flush to finish grade of topsoil or barked areas. Contractor shall provide extensions or stack additional valve boxes as necessary to bring valve box pit to proper grade.

4.2.19 IMPORT BACKFILL

All main line pipe, lateral line pipe and other irrigation elements shall be bedded and backfilled with clean soil, free of rocks 1” and larger. Contractor shall furnish and install additional backfill material as necessary due to rocky conditions. Trenches and other elements shall be compacted and/or water settled to eliminate settling. Debris from trenching operations un-usable for fill shall be removed from project and disposed of properly by Contractor.

4.2.20 OTHER PRODUCTS

A. Products designated as ‘NO SUBSTITUTIONS’ shall not be subject to change.

B. Substitution of equivalent products is subject to the Irrigation Designer and City Engineer’s approval and must be designated as accepted in writing.

The Contractor shall provide materials to make the system complete and operational.

4.2.21 SPECIFIED / APPROVED MATERIALS

MATERIAL	MANUFACTURER
COMBO POWER PEDESTAL CONTROLLER ENCLOSURE	VIT STRONG BOX
METER/PANEL COMBO	SQUARE D
CONTROLLER	RAIN BIRD
GROUNDING GRID	PAIGE
PEDESTAL BASE	VIT STRONG BOX
PVC SLEEVING	CERTAINTEED, CRESLINE WEST, JM
WIRE	PAIGE
WIRE SPLICES	3M
MAIN LINE PIPE	CERTAINTEED, CRESLINE WEST, JM
ISOLATION VALVES	WATEROUS (LARGE) APOLLO (SMALL) CONBRACO (DRAIN)
MAIN LINE FITTINGS	HARCO LASCO, SPEARS
MASTER VALVE	RAIN BIRD

MANIFOLD COMPONENTS	ACTION
REMOTE CONTROL VALVES	RAIN BIRD
QUICK COUPLER VALVES	RAIN BIRD
QUICK COUPLER VALVE SWING JOINT	LASCO
LATERAL LINE PIPE	CERTAINTEED, CRESLINE WEST, JM
LATERAL LINE FITTINGS	LASCO, SPEARS
RIGID SWING JOINTS: NIPPLES MARLEX STREET ELBOW	RAIN BIRD, EXCALIBUR LASCO, SPEARS
ROTOR HEAD	RAIN BIRD
SPRAY HEAD	RAIN BIRD
DRIP PRODUCTS	NETAFIM
PVC NIPPLES	EXCALIBUR
VALVE BOXES	CARSON
GLUE/PRIMER	IPS

SECTION 4.3
EXECUTION

4.3.1 PREPARATION

Contractor shall repair or replace work damaged by irrigation system installation. If damaged work is new, replacement or the original installer of that work shall perform repairs. The existing landscape of this Project shall remain in place. Contractor shall protect and work around existing plant material. Coordination of trench and valve locations shall be laid out with South Jordan City prior to any excavation occurring. Plant material deemed damaged by South Jordan City shall be replaced with new plant material at Contractors expense. Contractor shall not cut existing tree roots larger than 2” to install this Project. Route pipe, wire and irrigation elements around tree canopy drip line to minimize damage to tree roots. Contractor shall have no part of existing system used by other portions of site landscape without water for more than 24 hours at a time.

4.3.2 TRENCHING AND BACKFILLING

Pulling of pipe shall be permitted on this project at the Contractor’s option. Over excavate trenches both in width and depth. Ensure base of trench is rock or debris free to protect pipe and wire. Grade trench base to ensure flat, even support of piping. Backfill with clean soil or import material. Contractor shall backfill no less than 2” around entire pipe with clean, rock free fill. Main line piping and fittings shall not be backfilled until South Jordan City has inspected and pipe has passed pressure testing. Perform balance of backfill operation to eliminate any settling.

4.3.3 SLEEVING

Sleeve all piping and wiring that pass under paving or hardscape features. Wiring shall be

placed in separate sleeving from piping. Sleeves shall be positioned relative to structures or obstructions to allow for pipe or wire within them to be removed if necessary.

4.3.4 GRADES AND DRAINAGE

Place irrigation pipe and other elements at uniform grades. Winterization shall be by evacuation with compressed air. Automatic drains shall not be installed on this Project. Manual drains shall only be installed at POC where designated on Construction Drawings.

4.3.5 PVC PIPE

Install pipe to allow for expansion and contraction as recommended by pipe manufacturer. Install main line pipes with 18” of cover, lateral line pipes with 12” of cover. Drawings show diagrammatic or conceptual location of piping—Contractor shall install piping to: minimize change of direction, avoid placement under large trees or large shrubs, avoid placement under hardscape features. Plastic pipe shall be cut squarely. Burrs shall be removed, spigot ends of pipes 3” and larger shall be beveled. Pipe shall not be glued unless ambient temperature is at least 50 degrees F. Pipe shall not be glued in rainy conditions unless properly tented. All solvent weld joints shall be assembled using IPS 711 glue and P70 primer according to manufacturer specification, no exceptions. Glued main line pipe shall cure a minimum of 24 hours prior to being energized. Lateral lines shall cure a minimum of 2 hours prior to being energized and shall not remain under constant pressure unless cured for 24 hours. Appropriate thrust blocking shall be performed on fittings 3” and larger. All threaded joints shall be wrapped with Teflon tape or paste unless directed by product manufacturer or sealing by o-ring.

4.3.6 CONTROLLERS

All grounding shall be as directed by controller manufacturer and ASIC guidelines, not to exceed a resistance reading of 10 OHMs. Locate controllers in protected, inconspicuous place when possible. Coordinate location of pedestal controllers with South Jordan City to minimize visibility. Wire under hardscape surfaces shall be placed continuously in conduit. Pedestal controllers shall be placed upon VIT-Strong Box Quick Pad as per manufacturer’s recommendations. Controllers shall be oriented such that South Jordan City maintenance personnel may access easily and perform field system tests efficiently. Place Standard valve box at base of controller or nearby to allow for three to five feet of slack field control wire to be placed at each controller. Electrical supply and installation, as well as hook-up to controller shall be by Contractor or Developer.

4.3.7 VALVES

Isolation valves, remote control valves and quick coupler valves shall be installed according to manufacturer recommendation and Contract Specifications and Details. Valve boxes shall be set over valves so that all parts of the valve can be reached for service. Valve box and lid shall be set to be flush with finished grade. Only one remote control valve may be installed in a Rain Bird Standard size box. Place a minimum of 4” of ¾” washed gravel beneath valve box for drainage. Bottom of remote control valve shall be a minimum of 2” above gravel.

4.3.8 SPRINKLER HEADS

No sprinkler shall be located closer than 6” to walls, fences, or buildings. Heads adjacent to walks, curbs, or paths shall be located at grade and 2” away from hardscape. Control valves shall be opened and fully flush lateral line pipe and swing joints prior to installation of sprinklers. Spray heads shall be installed and flushed again prior to installation of nozzles. Contractor shall be responsible for adjustment if necessary due to grade changes during landscape construction.

4.3.9 FIELD QUALITY CONTROL

Main line pipes shall not be backfilled or accepted until the system has been tested for 2 hours at 100 PSI. Main line pressure test shall include all pipe and components from the point of connection to the upstream side of remote control valves. Test shall include all manifold components under constant pressure. Piping may be tested in sections that can be isolated. Contractor shall provide pressurized water pump to increase or boost pressure where existing static pressure is less than 100 PSI. Schedule testing with Irrigation Designer or previously designated South Jordan City 48 hours in advance for approval. Leaks or defects shall promptly be repaired or rectified at the Contractors expense and retested until able to pass testing. Grounding resistance at pedestal controller shall be tested and not exceed 5 Ohms.

4.3.10 ADJUSTMENT

Sprinkler heads shall be adjusted to proper height when installed. Changes in grade or adjustment of head height after installation shall be considered a part of the original contract and at Contractor’s expense. Adjust all sprinkler heads for arc, radius, proper trim and distribution to cover all landscaped areas that are to be irrigated. Adjust sprinklers so they do not water buildings, structures, or other hardscape features. Adjust run times of stations to meet needs of plant material the station services.

4.3.11 CLEANING

Contractor shall be responsible for cleanliness of jobsite. Work areas shall be swept cleanly and picked up daily. Open trenches or hazards shall be protected with yellow caution tape. Contractor is responsible for removal and disposal offsite of trash and debris generated as a result of this Project. South Jordan City shall perform periodic as well as a final cleanliness inspection. Contractor shall leave Project in at least a ‘broom clean’ condition.

4.3.12 DEMONSTRATION

After system is installed, inspected and approved, instruct South Jordan City in all aspects of operation and maintenance of system, including programming and operation of Central Control System.

CHAPTER 5
SECONDARY WATER

(Updated 3-18-25)

SECTION 5.1
GENERAL POILICIES

5.1.1 GENERAL

The design and construction of secondary water mains and other appurtenances in South Jordan City shall comply with these standard notes herein called "Secondary Water Standard Notes", or the permit requirements of various governing bodies, except where specific modifications have been approved, in writing, by the City Engineer. All submitted plans shall be stamped and signed by a civil engineer, registered in the State of Utah, and all work shall be in accordance with sound engineering practices.

Ordinances, requirements and applicable standards of governmental agencies having jurisdiction within the City's service area shall be observed in the design and construction of secondary water systems. Such requirements include but are not limited to current versions of the:

1. Municipal Code of South Jordan City.
2. Standard Specifications - American Public Works Association, State of Utah Chapter, Standard Specifications, current edition.
3. American Water Works Association.
4. American Society for Testing and Materials.

Secondary Water Standard Notes are subject to change to suit the needs of the Engineering and/or the Water Department.

5.1.2 DEVELOPER ENGINEER'S RESPONSABILITY

These standard notes establish uniform policies and procedures for the design and construction of the City secondary water system. They are not intended to be a substitute for engineering knowledge, judgment or experience. These procedures shall be reviewed by the developer's engineer and shall be applied as necessary to the project. Proposed deviations to these standards shall be submitted in writing, prior to preliminary plat and or development project approval.

It is the developer’s (or his designee’s) responsibility to be aware of the City's Secondary Water System Plan, Standards, and Specifications for secondary water system improvements and to indicate any main line relocations, extensions or over-sizing on the preliminary subdivision plat. A complete version of the master plan is available for review at the City's Engineering Department. This responsibility shall include investigating any changes from the Master Plan necessitated by development subsequent to the Master Plan, although the above shall not relieve the developer from the responsibility to provide an approved system consistent with Engineering Department requirements. Verification of the adequacy of the surrounding secondary water system rests jointly with the Engineering Department and the developer.

All plans, specifications, reports or documents shall be signed and stamped by a registered professional engineer, which will indicate responsibility for the plan design. A wet stamp is required on all documents except reproducible plans, where a stamp on the original is acceptable.

A “Preliminary Review” and or “Plans Approved for Construction” stamp or signature of the City on the plans does not in any way relieve the developer's engineer of the responsibility to meet all requirements of the City. The plans shall be revised or supplemented at any time it is determined that the City's requirements have not been met. Generally, plans that are signed as being authorized for construction will not require revisions based upon subsequent revisions to these standards, however, when the Engineering Department's opinion, a change to the project is necessary, based upon a significant change in the standards, which significantly affects public safety, future maintenance costs, or similar concerns, such a change may be required during construction by the City Engineer. Changes may also be required in the case where a developer does not proceed to construction within the time allowed in the agreement with the City.

The City Engineer will not accept the secondary water system until all applicable requirements of these standards and of the South Jordan City Municipal Code have been met.

SECTION 5.2
DESIGN CRITERIA

5.2.1 CITY SECONDARY WATER SYSTEM

A. General. South Jordan City owns water shares in various canal companies, which canals are located within the City. The main secondary water sources within the City are the South Jordan Canal, Utah and Salt Lake Canal, Utah Lake Distributing Co. Canal, Welby Jacob Canal, Beckstead Ditch, Midas Creek, Bingham Creek, Little Willow Creek, and Dry Creek. The City's service area generally includes the region west of US Interstate 15 (1-15) to U-111 and between 9400 South and 11800 South and coincides with the City's boundaries wherever there is a source for secondary water.

B. System Description. It should be noted that the City has a complete master plan for its secondary water system. As design of the secondary water systems is anticipated, every effort needs to be made to coordinate efforts with the Engineering Department to ensure present secondary water system requirements are met as well as providing for the future configuration of the secondary water system. The latest version of the master plan should always be considered, and discussed with the Engineering Department.

   Secondary water lines shall meet City Secondary Water Line Standards and specifications and the developer will be required to construct all required "off site" facilities as required by the City Engineer and the City.

5.2.2 WATER MAIN PIPE TYPE, CLASS, PRESSURES, CAPACITIES AND SIZES

A. Main Pipelines. In general, main and lateral secondary lines must be purple polyvinyl chloride (PVC) C-900 DR18 minimum PR 150 with tracer and caution tape (all wire connections need a moisture resistant nut).

B. Sizing of Mains. Secondary water mains shall be a minimum of 8-inches in diameter.

C. Water Demand Requirements. The secondary water system requires an application efficiency of 75% to support an annual requirement of 36-inches with peak demands of 11.88 gpm/acre.

D. Depth. The standard minimum depth of cover from the top of the pipe to finish grade is 3-feet (36") for all secondary water lines. The standard maximum depth of cover to the top of pipe is 5-feet (60") for all secondary water lines, unless approved by the City Engineer prior to construction. Increases in depth may be required where future road improvements could potentially remove some of the existing cover or where there are other conflicting utilities.

E. Pressure. Secondary water mains shall be designed to provide for service pressures between 55 psi and 100 psi.

F. Compaction. Compaction of 96% is required using a modified proctor. The pipe needs to be bedded in sand from 6" under the pipe to 18" above the top of the pipe.

G. Velocity. Secondary water mains shall be designed to provide a mean velocity of 5 fps in lines less than 24", and 7 fps in lines greater than 24".

H. Hydraulics. Each development will be required to design a hydraulically accurate system for the development under consideration. City staff will review the design as submitted by the developer's engineer or certified irrigation/landscape professional.

5.2.3 LOCATION OF SECONDARY WATER LINES (Streets)

A. Water Mains. Secondary water main lines, wherever possible, shall be located in public right-of-way parkstrip in the south and west side of the street. See Standard Drawings for separation requirements between any wastewater, storm lines, and water lines. However, where storm drains or other facilities are in conflict with the secondary water line, the secondary water lines should be located to provide a minimum of 5-feet clearance between the outsides of pipe (measured on a horizontal plane). This pertains as well to any case of parallel lines.

B. Connection: It is required a 1-inch IPS individual connection. Two (2) lots may be served by a common service connection line using 2-inch IPS shared (dual). Secondary water meter boxes shall be within 5' of a property line. Where possible, a dual service connection shall be used to provide service to adjoining lots. No concrete or mailboxes are allowed within 2 feet of the meter box.

5.2.4 LOCATION OF SECONDARY WATER LINES (Easements)

A. General. Similar to culinary water standards, the installation of secondary water lines within easements should be avoided where a reasonable alternate solution exists. Installation of secondary water lines should be within the park strips on the west and the south sides of the street (culinary lines are generally placed within the north and the east park strips), unless there are either physical limitations or extreme economic penalties. In general, the line within an easement shall be accessible by conventional maintenance vehicles traveling over paved roads or driveways unless otherwise approved.

B. Width. Secondary water easements for pipes should be a minimum of 15-feet wide.

   In the case that additional easement width is needed, Engineering Department approval is required. All plans should clearly indicate any known block walls, pavement, trees or other obstructions within a proposed easement.

C. Pipeline Location. Pipelines shall generally be placed in the center of easements; only in unusual circumstances will a line be approved which is closer than 5-feet from the easement edge.

5.2.5 SEPARATION OF SECONDARY WATER LINES, CULINARY WATER, AND WASTEWATER.

A. General. Proper separation of secondary water, culinary water systems, and wastewater is necessary to reduce the potential risk for an outbreak of waterborne diseases. Secondary water line separations should be treated the same as sewer lines.

B. Basic Separation Standards. Separation at crossings between secondary and culinary water is 10-foot parallel (horizontal) and a minimum of 18-inches vertical unless water line is in a casing (refer to culinary water standard notes). Therefore, when adequate physical separation cannot be attained, an increase in the factor of safety should be provided by increasing the structural integrity of both the pipe materials and joints by adding one of the following:

   1. Extra heavy cast iron or ductile iron pipe
   2. Encasement with 4-inches minimum of concrete or sleeving with water quality pipe.

   Each of these provisions must be extended for 10-feet on either side of the water line at 90 degrees to the crossing.

   Backflow prevention devices are required in all properties with dual source irrigation system (culinary and secondary). See Section 2.8

5.2.6 BLOWOFFS, AIR-VACS, VALVES AND METER BOXES

A. Blowoffs. All water line blowoffs will require two (2) water valve boxes, one for water valve and one for blow off riser. Riser shall be threaded, with a thread protector cap and placed 6" below finish grade. For sizing details refer to the Secondary Water Standard Drawings.

B. Air-Vac. Placed in standard 18-inch meter box with ball valve below air-vac. Refer to the Secondary Water Standard Drawings

C. Valves. Valves shall be located for adequate control of service areas, as approved by the city engineer. All valves must be accessible with a standard 6' valve key, regardless of design or design change, and need to be a Mueller or ~~Clow~~ **AFC** type valve. Nothing shall be constructed or installed within 5 ft of the valve.

   1. All drain valves shall be Gate Valves.

   2. All valve bodies shall have marked the manufacture's name and pressure rating.

D. Brass Marker. These shall be placed in front curb where the service is located marked with an "I" for irrigation and to be stamped and installed by the Contractor.

E. Pressure Test. 35 pounds per square inch (P.S.I.) air tested, must be maintained for a minimum of 2 hours, and witnessed by South Jordan City Water Department. If water is being used, follow hydrostatic testing standards and notify South Jordan City Water Department 48 hours in advance.

F. Fittings. All fittings are to be coated with poly fm grease and wrapped with 8-mil thick polyethylene.

G. Meter Box. Refer to the Secondary Water Standard Drawings

5.2.7 STRUCTURAL REQUIREMENTS

A. Supporting of Valves. Valves and fittings shall be supported by the trench bottom and shall be independent of the pipe. When pouring thrust blocks around a fitting, the concrete should be around the fitting and not the joint.

B. Thrust Blocks. Before pouring any thrust blocks, contractor shall give engineering inspector 24-hour prior notice. See Culinary Water Standards and Construction Details for more information on thrust blocks, also refer to Secondary Water Standard Drawings.

C. Service Boxes. Refer to Secondary Water Standard Drawings.

D. Manhole Lids. Water vault manhole lid specifications ASTM A 48-93, Class 35B Cast Iron construction, machined flat bearing surface, removable lid with pick holes, H-20 highway load rating; lid model with South Jordan City name and logo imprinted on lid and marked "Irrigation." Provide Model A-1180 manufactured by D&L Foundry & Supply, or acceptable equal.

5.2.8 PUMPING STATIONS, PUMPS, AND WEIRS.

A. Pump Stations. Facilities that work in conjunction with the pipeline to supply water for secondary purposes must be designed for reliability. The following criteria shall be considered:

1. All pump stations shall be designed above ground and be aesthetically pleasing with emphasis on minimization of their visibility, particularly with regards to any visual corridor.
2. All pump stations must have a dedicated source of pressurized water, fire hose, valve and nozzle to be provided for sump clean-out with suitable drain system for clean-out water. A backflow prevention device must be installed on any culinary connections. 3.
3. Further, in any station, the required pumping capacity must be met with one pump of the largest size out of service.
4. At every pump station it is required that a control system be set up so that each pump operates approximately the same amount of time in any given period. Pump motors shall be of the high efficiency variety wherever it can be shown that the extra cost for the motor is less than the present value of 15 years of reduced energy costs.
5. All pump houses must be designed for easy crane access around the building and appropriate sky-light and around heavy equipment.
6. Operator manuals on all pump houses and equipment must be provided to the Water Department

B. Pumps. It is the responsibility of the developer to provide pumps in every developed lot or a central pump that will provide enough pressure to the subdivision to comply with the pressure requirements listed in these standards and the following:

1. Flow rates on pump designs will need to be designed accordingly.
2. Only centrifugal pumps may be used for those systems using individual pumps per each lot (1.5 hp typical).
3. All pumps adjacent to canal shall be self-priming with adequate flow, otherwise grading must allow for gravity feed from supply canal or water source.
4. All community system pumps shall be centrifugal or turbine type, and shall be located in the front of the lot as opposed to the back of the lot.

C. Weirs. All weir designs and installations must be approved by the canal company and South Jordan City.

1. All new weirs must be installed with a self-cleaning rotating screen (models and specifications must be approved by the Public Works Director or their designee).
2. For specific design guidelines contact the appropriate canal company.

5.2.9 BACKFLOW PREVENTION

In order to comply with State and City regulations, all lots having a dual source irrigation system must install culinary backflow protection devices to protect the City culinary water system. The required devices include a manual disconnect, swing joint connection, and RP backflow assembly. Installation of these devices must be reported to the City within 24-hours.

Backflow assemblies shall be tested for functionality within ten working days of initial installation and annually thereafter. Annual test results shall be recorded with the Public Works Department. All backflow protective devices are to be installed, maintained and tested by and at the expense of the property owner. See South Jordan Municipal Code Section 13.04.370.

5.2.10 CONSTRUCTION

A. General. Refer to Culinary Water Details and Construction Standards for guidelines regarding staking, clearing and grubbing, quality of materials, removal and disposal of materials, and equipment to be incorporated into the work.

B. City Inspections. All work shall be available for inspection at all times. The contractor must provide 24-hour notice prior to the start of any work. Failure to provide proper notification may delay the construction starting date.

C. "As-Built Drawings." Original "As-Built Drawings" shall be turned over and/or submitted to the Engineering Department along with two sets of blue line mylar prints, a .dxf file, and a .pdf. These shall reflect all actual improvements made, and shall give the accurate location of all new/or relocated facilities.

D. Warranty Period and Defective Work. A warranty period of two years is required for all work after field acceptance of completed work. In the event that defective workmanship becomes evident within the warranty period, the work shall be replaced or repaired by the contractor without cost to the City. Failure or refusal to repair defective work shall cause exclusion from performing future work to be connected with the City's system and legal action.

E. Public Relations. The contractor shall conduct its affairs in a manner which will minimize disturbance to residents in the vicinity of the work. In this regard, standard working hours as specified in the Municipal Code and shall be observed unless prior approval is received, which also includes City observed holidays. The job site shall be maintained in a condition which shall bring no discredit to the City or its personnel, and all affected private improvements shall be restored to their original condition or better.

F. Excavation and Trenching. See Culinary Water Details and Construction Standards for requirements.

5.2.11 PROCEDURE FOR APPROVAL, PERMITS, AND PLAN CHECKLIST

Approval for improvement plans and required permits are the same as for Culinary Water. The Engineering Department shall approve and have the necessary permits of all proposed work before construction takes place. Fees/charges are established in the South Jordan City Municipal Code; however, if there are items requiring special approval, the deposition of funds or agreements shall be available. Insurance certificates are also necessary to cover general liability, auto liability, and worker's compensation insurance.

A plan checklist for culinary water has been prepared, and it shall also be used for secondary water purposes. Refer to Culinary Water Details and Standards for the necessary information regarding the required permits.

5.2.12 ABANDONMENT

All existing water lines (culinary and secondary) or structures that are to be abandoned shall be indicated in the drawings. All abandonment and construction techniques shall be discussed with the Engineering Department inspector and approved prior to any such work.

Refer to Culinary Water Details and Construction Standards for abandonment of water lines and structures, which also apply to secondary water.

CHAPTER 6
STORM DRAIN

(Updated 3-18-25)

SECTION 6.1
GENERAL

6.1.1 GENERAL

A. Storm Water Pollution Prevention Plan:

1. Shall be required for all construction activities as required under the Utah Pollutant Discharge and Elimination System (UPDES) permits and the following:

    a) Construction sites with a land disturbance of greater than or equal to one acre, including projects less than one acre that are part of a larger common plan of development or sale.

    b) Construction sites related to residential building that disturb a total of one acre or less of land.

    c) Any construction activity the City Engineer or Designee deems to pose a unique threat to water quality, air quality, or public health or safety.

2. SWPPP shall be managed through the South Jordan City online storm water management system.

    a) All BMP's covering a storm drain inlet must contain an overflow feature for high volume rain/runoff events. Reference chapter 9 for acceptable inlet protection.

3. A long term Storm Water Maintenance Plan is required to be submitted for development projects with a privately owned and/or maintained storm drain system and must include the following:

a) Inspection intervals (a minimum of once per year per the maintenance agreement or more frequently based on any design specifications).

b) Attach design, inspection and maintenance specifications (i.e. storm water treatment structure devices).

c) Waste management and material storage SOP's.

d) Maintenance intervals.

e) **Employee training SOP's in regards to the site's storm water system.**

f) **Any additional BMP's needed based on anticipated future changes to the site and or operations.**

g) **Keep records for review of all the above (records can include picture documentation).**

B. Storm Drain pipe in public right of way shall be minimum 18" RCP Class III or HDPE.

1. Storm Drain lines shall be TV'ed by the contractors hired firm after placement and compaction of road base and prior to placing asphalt. This TV'ed disk shall be reviewed by the City designated Inspector. All areas found defective shall be repair to the satisfaction of the City Inspector before placing asphalt.

2. Storm drain caution tape shall be place and centered 1' above the pipe.

3. Storm Drain lines will be TV'ed again, by City personnel prior to final bond release. All lines shall be cleaned by Developer prior to City performing the work. Any damaged pipe sections shall be repaired or replaced prior to final bond release.

C. Mirafi filter fabric may be required depending on the presence of groundwater, as determined by the City Engineer.

D. Manholes: Keep the manhole collar and cover down ¼" minimum and ½" maximum below finish asphalt grade. This will allow snowplows to pass over the top without hitting or damaging them, in the winter months.

Storm Drain manhole lid specifications: ASTM A 48-93, Class 35B Cast iron construction, machined flat bearing surface, removable lid with cleated surface and pick holes, H-20 highway load rating; lid molded with South Jordan City name and logo imprinted on lid; Provide Model A-1180 manufactured by D & L Supply., or acceptable equal. (See drawings section for detail.)

E. Developments must provide theft-resistant permanent installation of a City-approved storm drain marker at each storm water inlet. The marker item number is SD-SP, a stainless steel, painted blue, matte finish, embossed, fish symbol, optional serialization, 30 year warranty, with ¼" square hole made by Almetek Industries, Inc. Installation requires drive rivet and approved adhesive. Lettering on the marker as appropriately follows:

"Only Rain in the Drain" markers installed anywhere storm water discharges to a retention or detention pond. (See drawings section for detail.)

F. A cleanout box with 24” silt trap is required before a private storm water system enters the City’s storm drain system. All private storm drainage conveyance systems shall also have a snout in place or an oil water separator system, approved by the City Engineer, before it discharges into the city system.

Facility’s that use large amounts of hydrocarbons such as gas stations, vehicle lube facilities, vehicle repair, and or paving facilities, shall be required to have a hydrodynamic separator in place prior to discharging into the city system, unless otherwise approved by the City Engineer or Public Works Director.

G. The first storm drain inlet box down gradient from a dumpster enclosure shall be required to have a snout and a 24” minimum silt trap, or larger as required by manufacturer recommendations for snout installation.

H. Silt traps are required for all catch basins, inlets, manholes etc. Silt traps shall be 12” deep, measured from invert of lowest pipe to bottom of box.

I. Boxes: During installation, grout boxes inside and out, and strip the forms from inside and outside of the boxes. Clean all dirt, rocks and debris from inside of the boxes. If using a pre-cast box, make sure to form a 6” collar around the outside of box with soil below pipe dug down and formed, and poured with concrete to engineering inspectors discretion. Before pouring concrete collar, contractor shall give engineering inspector 24-hour prior notice.

Inlet and combo boxes shall be precast or knockout boxes (unless otherwise approved by the City Engineer) and must accommodate an 18” x 48” frame and grate. Hooded grates are not allowed due to debris accumulating in the storm drain.

J. All onsite retention and detention basins shall be designed for a 100 year 24 hour storm event. The calculations and storm intensities used in the design must be submitted to the city for review and approval. Percolation rates are not allowed to be used in the capacity calculations for the storm water basins unless otherwise approved by the City Engineer. Retention basins shall be required to drain within 3 days of the storm event. Engineer shall provide a design that meets that criteria. All calculations must be stamped and signed by a registered professional engineer.

K. For residential developments with underground storm water storage systems, storm drain calculations will not be allowed to include the void space in the gravel towards the total storage volume capacity. For commercial developments with underground storm water storage systems, storm drain calculations will not be allowed to include the void space in the gravel towards the total storage volume capacity unless approved by the City Engineer on a case by case basis. Projects allowed to count the gravel void space will need to show an acceptable overflow path for the storm water, in case the underground storage were ever to over top. In addition, the storm water drainage system will require an approved separator unit to filter out sediment, oils and debris from the storm water prior to it entering the underground storm water storage chambers.

SECTION 6.2
REINFORCED CONCRETE PIPE

6.2.1 DESCRIPTION

This item shall govern for the furnishing and installing of reinforced concrete pipe and materials for construction.

6.2.2 MATERIALS

A. Pipe Type:
Shall be minimum 18”, RCP Class III.

B. Bedding and Backfill (RCP):
A City specified material (A-1-a to A-2-7 under AASHTO Soil Classification system) will be used for trench backfill. Place 1”minus gravel 6 inches under pipe and up to spring line (no squeegee or chips). Tamp underneath the haunches to prevent settlement. Compaction of 96% modified proctor is required.

SECTION 6.3
POLYPROPYLENE PIPE

6.3.1 DESCRIPTION

This item shall govern for the furnishing and installing of all Polypropylene Pipe, materials for construction and all related connections and fittings.

6.3.2 MATERIALS

Unless otherwise specified on the plans, pipe and joint fittings shall conform to the following:

A. Eighteen through 60-inch (460 through 1500 mm) pipe shall be smooth interior and annular exterior corrugated polypropylene (PP) pipe meeting the requirements of ASTM F2881 or AASHTO M330, Type S, for respective diameters. The pipe supplied shall be watertight as defined in the joint performance requirements of this specification.

B. Virgin material for 18 through 60-inch pipe and fitting production shall be an impact modified copolymer meeting the material requirements of ASTM F2881 and AASHTO M330, for respective pipe diameters.

C. Joints shall be installed in accordance with manufacturer’s installation

instructions. All Bell-and-Spigot pipe joints shall be thoroughly cleaned. Joint lubricant, supplied by the manufacturer, shall be liberally applied to entire interior of bell and gasket on spigot prior to assembly. Watertight joints shall be bell-and-spigot meeting the watertight requirements of ASTM F2881. Gaskets shall be made of polyisoprene meeting the requirements of ASTM F477. Gaskets shall be installed by the pipe manufacturer and covered with a removable wrap to ensure the gasket is free from debris. A joint lubricant supplied by the manufacturer shall be used on the gasket and bell during assembly.

D. Fittings shall conform to ASTM F2881, with the exception of meeting the watertight joint performance requirements of ASTM D3212. Bell & spigot connections shall utilize a spun-on, welded or integral bell and spigot with gaskets meeting ASTM F477.

6.3.3 INSTALLATION

Installation shall be in accordance with the product manufacturer's published installation guides and these instructions.

A. All pipe and fittings shall be delivered to the site and unloaded with handling that conforms to the manufacturer's instructions for reasonable care. Pipe shall not be rolled or dragged over gravel or rock during handling. The Contractor shall take necessary precautions to ensure the method used in lifting or placing the pipe does not induce undue stress fatigue in the pipe.

B. Bedding and Backfill:
Bedding shall be gravel or compacted road base as per South Jordan City standards. A stable and uniform bedding shall be provided for the pipe and any protruding features of its joint and/or fittings. The middle of the bedding, equal to one-third of the pipe outside diameter, shall be loosely placed while the remainder shall be compacted to a minimum of 96% of maximum density per AASHTO T99, or as shown in the plans. Pipe bedding shall be a minimum of 4" – 6" in thickness. The bedding surface for the pipe shall provide a firm foundation of uniform density throughout the entire length of the pipe. Backfill shall be placed in layers of 8" loose lift thickness and brought up evenly and simultaneously on both sides of the pipe to an elevation not less than one foot (1') above the top of the pipe. Each layer shall be thoroughly compacted; backfill shall be compacted to a minimum compaction level of 96% Density (Modified Proctor).

C. Trench Widths - Where trench walls are stable or supported, provide a width sufficient, but no greater than necessary, to ensure working room to properly and safely place and compact haunching and other embedment materials. The space between the pipe and trench wall must be wider than the compaction equipment used in the pipe zone. Minimum width shall be not less than the greater of either the pipe outside diameter plus 16 in. or the pipe outside diameter times 1.25, plus 12 in. In addition to safety considerations, trench width in unsupported, unstable soils will depend on the size and stiffness of the pipe, stiffness of the embedment and in-situ soil, and depth of cover.

D. Dewatering - Do not lay or embed pipe fittings or drainage structures in standing

or running water. At all times prevent runoff and surface water from entering the trench. When water is present in the work area, dewater to maintain stability of in-situ and imported materials. Maintain water level below pipe bedding and foundation to provide a stable trench bottom. Use, as appropriate, sump pumps, well points, deep wells, geofabrics, perforated underdrains, or stone blankets of sufficient thickness to remove and control water in the trench. When excavating while depressing ground water, ensure the ground water is below the bottom of cut at all times to prevent washout from behind sheeting or sloughing of exposed trench walls. Maintain control of water in the trench before, during, and after pipe system installation and until embedment is installed and sufficient backfill has been placed to prevent flotation of the pipe, fitting, or drainage structures. To preclude loss of soil support, employ dewatering methods that minimize removal of fines and the creation of voids in in-situ materials.

SECTION 6.4
STORM DATA AND IDF CURVE

South Jordan City

Storm Data at 10600 South and Redwood Road
2, 10, 100 Year Storm

Time (min)	Intensity (in/hr)			Amount (in)		
	2-yr	10-yr	100-yr	2-yr	10-yr	100-yr
5	1.992	3.504	5.256	0.166	0.292	0.438
10	1.540	2.736	4.300	0.257	0.456	0.717
15	1.192	2.144	3.556	0.298	0.536	0.889
16	1.145	2.061	3.440	0.305	0.550	0.917
17	1.105	1.989	3.340	0.313	0.564	0.946
18	1.070	1.915	3.239	0.321	0.575	0.972
19	1.034	1.853	3.140	0.327	0.587	0.994
20	1.003	1.794	3.053	0.334	0.598	1.018
21	0.978	1.745	2.970	0.342	0.611	1.040
22	0.953	1.695	2.898	0.349	0.622	1.063
23	0.931	1.652	2.827	0.357	0.633	1.084
24	0.912	1.613	2.760	0.365	0.645	1.104
25	0.891	1.579	2.700	0.371	0.658	1.125
26	0.875	1.544	2.640	0.379	0.669	1.144
27	0.859	1.511	2.587	0.387	0.680	1.164
28	0.842	1.480	2.534	0.393	0.691	1.183

29	0.828	1.450	2.485	0.400	0.701	1.201
30	0.812	1.422	2.436	0.406	0.711	1.218
31	0.795	1.391	2.380	0.411	0.719	1.230
32	0.778	1.360	2.320	0.415	0.725	1.237
33	0.761	1.330	2.260	0.419	0.732	1.243
34	0.743	1.300	2.200	0.421	0.737	1.247
35	0.730	1.272	2.148	0.426	0.742	1.253
36	0.714	1.245	2.111	0.428	0.747	1.267
37	0.700	1.219	2.074	0.432	0.752	1.279
38	0.683	1.192	2.038	0.433	0.755	1.290
39	0.671	1.170	2.001	0.436	0.761	1.301
40	0.659	1.147	1.964	0.439	0.765	1.309
41	0.647	1.122	1.927	0.442	0.767	1.317
42	0.634	1.102	1.890	0.444	0.771	1.323
43	0.622	1.081	1.854	0.446	0.775	1.328
44	0.611	1.063	1.817	0.448	0.780	1.332
45	0.601	1.045	1.780	0.451	0.784	1.335
46	0.591	1.029	1.756	0.453	0.789	1.346
47	0.582	1.012	1.733	0.456	0.793	1.357
48	0.572	0.995	1.709	0.458	0.796	1.367
49	0.565	0.981	1.685	0.461	0.801	1.376
50	0.558	0.969	1.661	0.465	0.808	1.384
51	0.550	0.955	1.638	0.468	0.812	1.392
52	0.544	0.942	1.614	0.471	0.816	1.399
53	0.538	0.931	1.590	0.475	0.822	1.405
54	0.532	0.920	1.566	0.479	0.828	1.410
55	0.528	0.912	1.543	0.484	0.836	1.414
56	0.521	0.901	1.519	0.486	0.841	1.418
57	0.519	0.894	1.495	0.493	0.849	1.420
58	0.515	0.887	1.472	0.498	0.857	1.422
59	0.511	0.880	1.447	0.502	0.865	1.423
60	0.509	0.874	1.424	0.509	0.874	1.424
120	0.325	0.550	0.845	0.650	1.100	1.690
180	0.245	0.410	0.599	0.735	1.230	1.797
360	0.146	0.231	0.317	0.876	1.386	1.902
720	0.088	0.139	0.190	1.056	1.668	2.280
1440	0.049	0.079	0.109	1.176	1.896	2.616

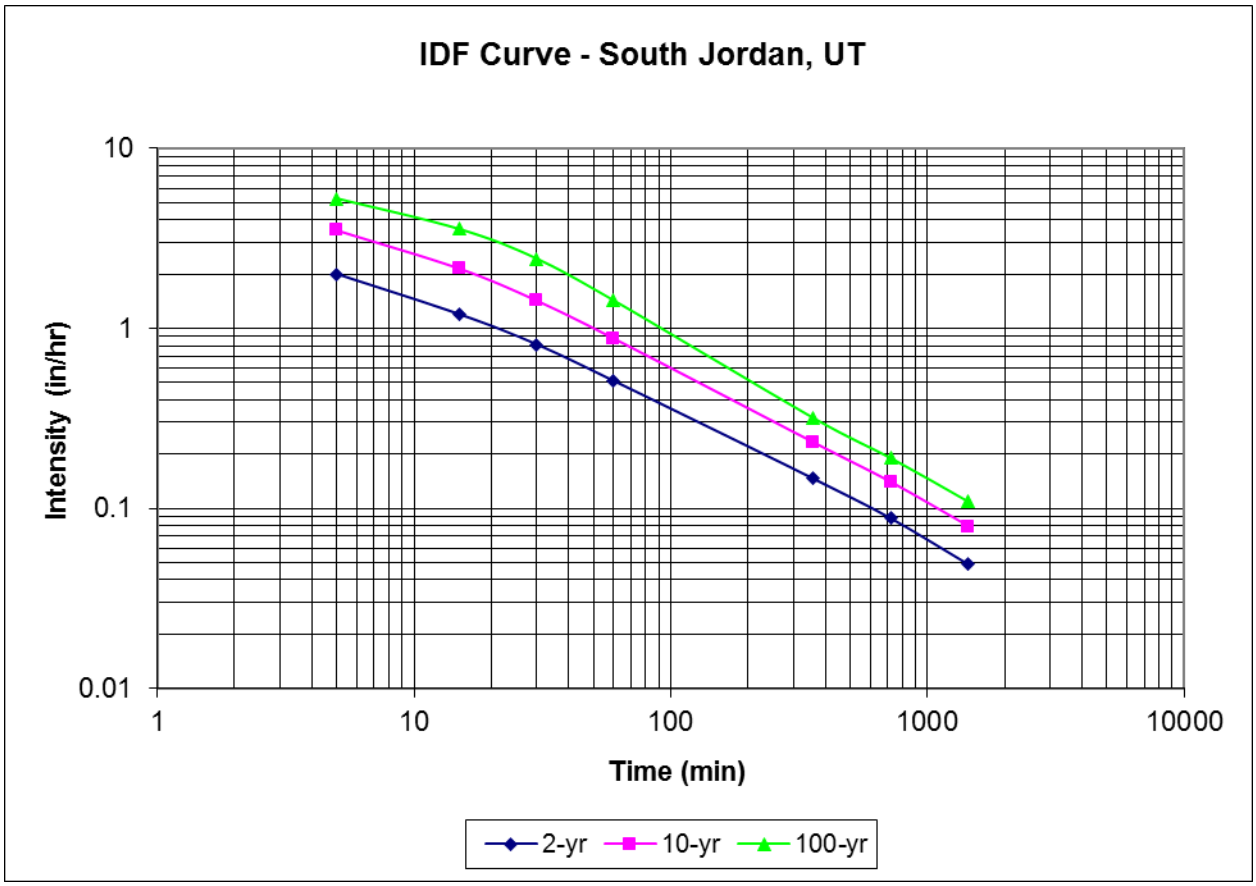
IDF Curve - South Jordan, UT
Intensity (in/hr)
10
1
0.1
0.01
1
10
100
1000
10000
Time (min)
2-yr
10-yr
100-yr

CHAPTER 7
STREETS

(Updated 3-19-24)

SECTION 7.1
FLEXIBLE PAVEMENT DESIGN

A. General – This section provides a comprehensive set of design procedures required to produce an acceptable flexible pavement structural design on new and reconstructed roads in the City of South Jordan. These design procedures are based on the recommendations found in the 1993 version of the *"AASHTO Guide for Design of Pavement Structures"* and on recommendations found in the November 1998 version of the *"UDOT Pavement Design Manual"*. All roads in the City, as determined by the City Engineer, must be designed using these empirical methods. The purpose of this specification is to aid the designer in selecting appropriate values to be used in the empirical method.

B. Design Engineer's Responsibilities – The design of a pavement section is a combination of several different and varied factors of civil and geotechnical engineering, which are under the control of the design engineer, not the City. This includes the preparation of an adequate geotechnical report which is representative of soil conditions in the field, at the proper location, both horizontally and vertically, a determination of the types of vehicles which are going to use these roads, the numbers of these types of vehicles, an assumption of the life of the roadway, the equivalent single axle loads (ESALs) the roadway will be subject to, all of which are based on original assumptions prepared and made by the design professionals preparing the pavement section design.

   Assumptions and studies made of these initial design parameters are the sole responsibility of the design professional preparing the pavement design and are not dictated by the City. The City is providing maximum and minimum values they may consider in their design, however, the designer is obligated to determine the appropriate value for the road section. The design professional is tasked with performing an adequate design for the pavement section and affixes their stamp and signature indicating they have performed the design in accordance with City standards, and it is adequate to provide the intended service life.

7.1.1 DESIGN VARIABLES

A. Traffic Volumes and Vehicle Distribution: The design procedures for highways and low volume roads are all based on the cumulative expected 18-kip Equivalent Single Axle loads (ESAL) during the analysis period. The designer shall consider the parameters listed in table 7.1 as they use the method described in the "UDOT Pavement Design Manual" to convert the mixed traffic into the appropriate ESAL value.

Note that values for the actual volume and classification distribution on existing streets shall be collected using permanent counters over a minimum period of 72-hours. The volume and classification distribution for new road sections shall be provided in an acceptable traffic impact study, or by collecting volumes on an existing street that is similar to the new project. In some cases, special consideration must be given to construction traffic.

Once the values for the volume and classification distribution are determined, the designer must then compare the values with the parameters listed in table 7.1 and ensure that they use the most conservative value in calculating the ESAL value.

The designer must determine the projected AADT for the road and then compare it with the minimum AADT allowed by the City and use the greater value in the design. If the road section is a dead-end, with no potential of future growth and less than 80 residences accessing the road, then the minimum AADT volume to be used in the design is 1,000. All other roads must be designed using a minimum AADT volume of 2,000.

Table 7.1 Vehicle Classification Distribution Parameters

Class	Type	Distribution of Traffic
1-2	Motorcycles/Cars	Max = 98.00 %
3	Other 2-Axle, 4-Tire Single Unit Vehicles	Min = 1.00 %
4	Buses	Min = 2 per day
5-7	2- Axle, 6- Tire Single Unit Trucks	Min = 0.89 %
8-10	Single Trailer Trucks	Min = 0.01 %
11-13	Multi-Trailer Trucks	TBD by Designer

B. Selection of Design CBR – Subgrade soil CBR values shall be determined using samples compacted at optimum moisture content to 100 percent of the maximum density obtainable by the AASHTO T-99D method of compaction. CBR tests shall be performed according to AASHTO T-193 except that a standard surcharge weight of 10 pounds shall be used for soaking and the penetration test of all samples. A minimum of one CBR sample per 800 feet of road section must be considered, however, designer is obligated to inspect the site and ensure that the CBR samples are a reflection of the actual soil conditions on site. A max subgrade CBR value of 10 may be used with the AASHTO empirical equation.

Designer must schedule an appointment with the City Engineering Department 48 hours prior to collecting CBR samples to be used for the flexible pavement design. The City will have an inspector meet the designer on site at the time they are taking the samples. For a CBR sample to be considered for the design it must be witnessed by a South Jordan City inspector. The designer must show the inspector where they'll be taking the tests and have adequate tools to ensure that they are taking the samples at the correct horizontal and vertical location of the future roadway. If soil on site is inconsistent, then additional samples may be needed at the discretion of the inspector.

C. Additional Pavement Design Parameters – Table 7.2 lists additional parameters that designer must consider or include in the design of the pavement section.

Table 7.2 Pavement Design Parameters for Flexible Pavement

Description	Parameter
Growth Rate:	TBD by Designer
Analysis Period or Design Life:	20 yrs
Reliability:	90%
Standard Deviation	0.45
Initial Serviceability	4.2
Terminal Serviceability	2.5
Drainage Coefficient	Max = 1.0
Subgrade CBR (for design equation)	Max = 10.0
Structural No. Hot Mix Asphalt	0.40 per inch
Structural No. Untreated Base Course	0.10 per inch
Structural No. Granular Borrow	0.08 per inch

D. Stability and Constructability - It is generally impractical and uneconomical to place layers of material that are less than some minimum thickness. The following values are the City of South Jordan's minimum thicknesses for surface and base layers. These values are not a substitute for a professionally prepared roadway structural section design but are used as a starting point in the design process.

Table 7.3: Asphalt Concrete Pavement Minimum Structural Section

Subgrade Class	Pavement Section	Roadway Classification	
		Local	Minor Collector
Very Poor (CBR <3)	Asphalt Concrete Surface	3.5"	4"
	Untreated Base Course	10"	8"
	Granular Backfill Borrow	*	12"
	Non-Woven Geotextile Required	Yes	No
Poor (CBR 4-9)	Asphalt Concrete Surface	3"	4"
	Untreated Base Course	9"	14"
	Granular Backfill Borrow	*	*
	Non-Woven Geotextile Required	Yes (If CBR is 4 or less)	Yes (If CBR is 4 or less)
Medium (CBR 10 or more)	Asphalt Concrete Surface	3"	4"
	Untreated Base Course	8"	10"
	Granular Backfill Borrow	*	*
	Non-Woven Geotextile Required	No	No
* Additional depth may be needed if the subgrade has a high frost hazard potential.			

7.1.2 FROST HAZARD IDENTIFICATION

Frost action creates a hazard to pavement performance by causing the surface to heave and by decreasing the soil support by increasing the moisture content above the normal saturation content. The following three conditions must exist for a pavement frost hazard to exist:

1. Temperatures below freezing.

2. A water table above the frost line or a source of water that can saturate the soils above the frost line by infiltration or capillary action.

3. A grain size distribution that will result in frost susceptible pore sizes.

The typical depth to the frost line at varying locations within South Jordan is between 20 and 30 inches. Many of the soils above the frost line in the City may be classified as frost susceptible according to grain size classification criteria. The most distinguishing factor for identifying pavement frost hazards is condition 2 (water supply).

For frost susceptible soils within the frost zone, the frost hazard may be rated as high, or low, according to the following conditions. The designer must include a frost hazard rating in the site evaluation documentation verifying that an evaluation of frost action has been attempted and has not been overlooked. When the rating is unknown, the City Engineer will determine if frost action mitigation measures need to be included in the design based upon the recommendation and data collected by the designer.

The conditions associated with a high frost hazard potential include:

1. A water table within 10-feet of the pavement surface.

2. Observed frost heaves in the area.

3. The U.S. Army Corps of Engineers (USCOE) considers inorganic soils containing 3-percent (by weight) or more of grains finer than 0.02 mm in diameter, to be frost susceptible for pavement design purposes.

4. A potential for the ponding of surface water and the occurrence of soils in the frost zone beneath the pavement to become saturated due to the ponding.

The conditions associated with a low frost hazard potential include:

1. A water table greater than 20-feet below the pavement surface.

2. Natural moisture content in the frost zone low in comparison to the saturation level.

3. Presence of seepage barriers between the water supply and the frost zone.

4. Existing pavements or sidewalks in the vicinity, with similar soil and water supply conditions and without constructed frost protection measures that have not experienced frost damage.

5. Pavements on embankments with surfaces more than 3 to 6-feet above the adjacent grades.

If the soil is identified as having a high frost hazard potential, then designer must include measures to mitigate the frost action. Some of these measures may include:

1. Partial Removal of Frost-Susceptible Material. This method is commonly used in combination with better drainage.

2. Limit Water Supply by methods such as paved shoulders, side ditching, edge drains, and sub-drains. An attempt to improve drainage is essential in controlling the damage caused by frost action.

3. Cover Subgrade with Sufficient Depth of Non-Frost-Susceptible Material. This method is commonly used in combination with better drainage. Removal or covering should be to a minimum of 70-percent of the predicted frost depth.

SECTION 7.2
TESTING OF MATERIALS

A deflection test must be performed on the subgrade before geotextile or base material is placed. Any soft or pumping areas must be removed and replaced with granular borrow at the City Engineer's judgment. Density tests of the subbase and asphalt material must be performed in accordance with APWA specifications. Final proof roll of road base must be performed by Developer and witnessed by Developer's Geotechnical Engineering Consultant and City Inspector. Developer's Geotechnical Engineer must analyze and recommend stabilization of any subbase material. Asphalt placement between October 15th and April 15th must have City Engineer's approval.

A: Asphalt Pavement Tolerances

Reference Table 4 – Roughness Tolerance of Section 3.6 of Asphalt Paving 32 12 16 of the APWA 2012 Manual of Standard Specifications

B. Asphalt paving between October 15th and April 15 is allowed under the following conditions and restrictions (which are in addition to the standard City and APWA paving requirements from April 15th to October 15th):

1. Request must be made by filling out the Cold Weather Paving Permit application and submitting it to the City Engineer at least 3 days prior to the proposed paving date.

2. The weather forecast used for cold weather paving applications in South Jordan City will be from the National Oceanic and Atmospheric Administration (NOAA). If the NOAA weather forecast is unavailable for any reason, an alternative forecasting agency will be per the City Engineer or his designee's direction.

3. There can be no frost in the structural section

4. Pavement mat shall be core drilled and tested after paving, not less than two locations per paving section, location as determined by the engineering inspector, and not less than 1 core per 1,000 linear feet in each travel lane. Core drilling and testing must be performed by a licensed geotechnical engineering firm and will be paid for by the developer. A written copy of the testing results is required to be submitted to the City. (This provision may be waived if the temperature over a three day period, one day before paving and one day after paving has a minimum 24 hour temperature higher than 48 degrees).

5. All core drills shall be above 92% compaction and all cores must average a minimum of 94% combined. If this is not achieved the asphalt will be removed and replaced at the developer's expense.

SECTION 7.3
CURB, GUTTER AND SIDEWALK

A: Curb: High back Curb will only be allowed! If slip forming, an expansion joint is required every 300 feet and at point of curvature (PC) and point of tangency (PT). If hand forming, expansion is required at PC and PT, and every 100'. Expansion joints are required every 30' to 40' on a curve. Road base under the curb and gutter must match the road base thickness under the asphalt (with a minimum of at least 8" thick) and be compacted to 96% of maximum density. A 6.5 bag mix will be used along with a coating of white pigment curing compound. A 7.5 bag mix must be used from October 15th to April 15th (or at engineering inspector's discretion; when nighttime temperatures start to approach freezing). There will be no ponding allowed. Before placement of asphalt, a flow test must be performed at engineering inspectors discretion. Sections that do not flow, or where ponding occurs, will be removed and replaced.

On all Construction sites contractor must notify engineering inspector 24 hours prior to pouring any concrete and verify proper location.

B. Sidewalk: Compact subgrade to 96% of maximum density. 6" of base, compacted to 96% of maximum density is required. Concrete thickness will be 5". Sidewalk will be scored to depth of between ½" to ¾" deep every 6' for a 6' wide sidewalk, or score lines shall be placed at intervals equal to the width of the sidewalk. An expansion joint will be placed in the sidewalk at 42-foot intervals. All handicap ramps require an ADA and APWA approved detectable warning surface. Material of

detectable warning surface shall be dark gray. ADA ramps are to be constructed according to the latest edition of the APWA Manual of Standard Plans. All joints must be a tooled radius edge. Saw cutting of joints may be allowed on a case by case basis due to constructability issues and must be approved by the city engineering inspector prior to construction.

C. Stamped / Colored Concrete: Coloring of concrete shall be done in two parts; base color of concrete and color release. Base color shall be added at the batch plant prior to delivery in accordance with manufacturer's guidelines. Color release shall enhance or accent the base color. The base color and color release shall be shown on the engineering drawings and approved by the City. Standard color shall be Yosemite Brown (per Davis Color Chart) with a dark grey (per Brickform standard color guide) release. Stamping of concrete shall be done in accordance with manufacturer's specifications. Cure and seal finished surface in accordance with manufacturer's specifications.

SECTION 7.4
PARK STRIPS

A. Park strips shall have a minimum cross slope of 2% and a maximum cross slope of 33% unless otherwise approved by the City Engineer.

B. Stairs are allowed in the park strip as long as they comply with section 1009 of the International Building Code (IBC) and receive prior approval from the City Engineer.

SECTION 7.5
STREET REPAIR / REPAVING POLICY

The following is the policy for the repair and repaving of streets that are cut or excavated. These requirements fall in line with the City adopted LTAP Program for street maintenance. OCI rating shall be based on South Jordan City's most current OCI rating map and database.

Where excavations are made in paved areas, it is a common practice after the trench has been backfilled and compacted to put down a temporary gravel surface and then allow traffic back onto the road until such time as the permanent repairs are completed. These conditions will only be allowed for up to one week, during which the contractor is required to maintain the gravel surface. After the one week period, the gravel surface must be replaced by an asphalt patch, whether that is a temporary patch to be replaced later or a permanent patch according to this chapter, standard drawing 3010 and all other city standards.

All roadwork/cuts in concrete streets shall require full panel removal of the concrete slab(s) that are being cut or damaged and replacement of that complete concrete slab.

After the roadwork/cuts have been repaired and/or repaved, the repaired surface is required to match the existing road surface.

All asphalt street repairs requiring a mill and overlay shall use AC-10 oil as a tack coat on milled surfaces prior to placing paving fabric, unless otherwise approved by the City Engineer, and shall be required to use a ½" asphalt mix design approved by the City for paving. See also Standard Drawing 3010.

7.5.1 REPAIR AND REPAVING

A. OCI Rating: 80 to 100

1. Street shall require an overlay over the full width of the street. The thickness of the overlay shall be a minimum of two (2) inches, paving fabric is required, milling/grinding is required (see standard drawing 3010). The distance of the overlay beyond the trench repair shall be per the requirement of the City Engineer. The City Engineer may modify this requirement as the site conditions may dictate.

B. OCI Rating: 60 to 79

1. Street shall require a mill and overlay per standard drawing 3010. The width of mill and overlay shall be no less than 4' from edge of nearest construction joint. If the distance to the nearest construction joint is less than 4', the mill and overlay must go to the next closest construction joint.

C. OCI Rating: 59 and Below

1. Reconstruct the trench per City Standards (see standard drawing 3010).

SECTION 7.6
STREET WIDENING

A development that widens an existing street shall be required to remove the pavement to centerline of the side of the street that is being widened. The street shall be re-constructed (this includes road base and asphalt) to centerline along the length of the development. The purpose of the reconstruction is to ensure that the cross section of the road from centerline to the new curb and gutter meets City Standards. This condition may be waived by the City Engineer if the developer's Civil Engineer shows that the installation of the new curb & gutter and asphalt pavement strip will meet the City Standards for the cross section of the roadway from centerline to the new curb and gutter.

It should be noted that if there are cuts in the roadway beyond the pavement work the pavement shall be as per the requirements listed above depending on the age of the street.

SECTION 7.7
STREET SIGNS

A. General - All street signs shall comply with the current edition of the Manual of Uniform Traffic Control Devices (MUTCD) per the current edition adopted by UDOT and approved by the City of South Jordan.

B. The street sign contractor shall obtain street names and block numbering from the Planning Department prior to construction.

C. Minimum Letter Heights on Street Name Signs

Type of Mounting	Type of Street or Highway	Speed Limit	Minimum Letter Height		Minimum Sign Dimensions (Length x Height)
			Initial Upper-Case	Lower-Case	
Overhead	All types	All speed limits	12 inches	9 inches	48 x 14 inches
Post-mounted	Multi-lane	More than 40 mph	8 inches	6 inches	40 x 10 inches
Post-mounted	Multi-lane	40 mph or less	6 inches	4.5 inches	38 x 8 inches
Post-mounted	2-lane	All speed limits	6 inches*	4.5 inches*	38 x 8 inches

7.7.1 MATERIALS

Sign components such as sheeting, EC film, inks, letters and boarders are all required to be from the same manufacturer.

A. Sheeting

1. Retro reflective Sheeting shall meet ASTM D 4956 standard specification.

2. Traffic signs and traffic control devices shall meet or exceed ASTM Type IV sheeting.

B. Film

1. Only Acrylic EC film may be used to achieve color. Vinyl EC film in not accepted.

C. Film

1. Finished signs must have a protective clear overlay applied to the entire face of the sign. Overlay must be part of an integrated component system.

D. Post

1. Refer to standard drawing S-3

E. Base

1. All signs larger than 36” X 36” or 1296 square inches per sign pole shall be mounted on a Slip Base system per UDOT standard drawing SN 10B (detail drawing attached to standard drawings) with a “Z” bar backing. Signs of this size are not allowed to be mounted on a yielding pole.

2. Signs that are installed in an area that will be concreted or contain hardscape rather landscaping must be installed with a slip base system

All components and warranties shall be compatible with substrates used by the City of South Jordan, including Aluminum ASTM B 209 5052-H38 or 6061-T-6

7.7.2 WARRANTY

All sign suppliers are required to warranty permanent street signs they supply for a period of ten (10) years after the time of installation against workmanship, and material failures. Contractor is required to do each of the following:

1. Printed on each sign in the bottom right corner or in the border, shall be a two digit number representing the year the sign was fabricated and also include the name or initials of the printing agency.

2. Affix to each sign and device a two inch by two inch impermeable, non-fading, weather resistant, self-adhesive label. Attach label where it will not obscure sheeting. The label shall contain the month and year of manufacturing, sheeting manufacturer, sheeting type, and supplier’s name.

SECTION 7.8
RESIDENTIAL STREET LEVEL OF SERVICE

7.7.1 CITY POLICY AND GUIDELINE

Worsening traffic congestion on arterial and collector roadways continue to divert traffic onto residential streets. Although each lane of a residential street could carry from 1,000 to 1,600 vehicles per hour, the quality of life along a residential street is impacted at far lower traffic levels.

The City's General Plan states the following, "Preserve peace and quiet in residential areas through circulation design that slows traffic flows and encourages safe driving practices." Since the City's General Plan is vague on the desired level of service of residential streets. Staff (City Traffic Committee) has formulated the Residential Street Level of Service categories shown as Exhibit "A". This exhibit is based on the desire stated in the General Plan and staff's experience with residents complaining about quality of life issues along residential streets. These peak hour volume, average daily traffic volume and vehicle speed thresholds closely match the degree of concern expressed to staff regarding the quality of life along residential streets and the relative need for traffic calming under these conditions.

This Residential Street Level of Service standard also will help staff to determine how new development will impact neighborhood streets from a Level of Service Standard or Quality of Life standard.

A Residential Street is defined by City Standards as any street that has a 55 foot right of way or less and/or with 28 feet of pavement width or less.

If new development will significantly lower (as determined by the City Engineer) the LOS as listed, the development will be required to install traffic calming measures as determined by the City Engineer.

The following are the Level of Service (LOS) categories and their descriptions:

<u>LOS "A"</u>

Describes living conditions where a residential street only carries traffic from the adjacent residences. It is very easy to walk across the street, ride bicycles and enter or exit residential driveways. Typical motor vehicle speeds are 25 MPH or less. During the peak traffic hour, one car passes down the street every two minutes. The typical traffic volume is under 300 vehicles per day with only 30 vehicles during the peak travel hour.

<u>LOS "B"</u>

Describes living conditions where a residential street carries traffic from two residential blocks. It is easy to walk across the street, ride bicycles and enter or exit residential driveways. Often residents are concerned about vehicle speeds that have increased to 25-30 MPH. During the peak traffic hour, one car passes down the street every minute. The typical traffic volume is under 600 vehicles per day with 60 vehicles during the peak travel hour.

<u>LOS "C"</u>

Describes living conditions where a residential street carries traffic from four residential blocks. It is relatively easy to walk across the street, ride bicycles and enter or exit residential driveways. Residents are concerned about vehicle speeds that have increased to over 30 MPH. Residents are also uncomfortable with vehicle

volumes that have risen to 1,200 vehicles per day with 120 vehicles during the peak travel hour. During the peak traffic hour, one car passes down the street every 30 seconds.

LOS “D”

Describes living conditions where a residential street carries traffic from six residential blocks. Increased caution is necessary when walking across the street, riding bicycles and entering or exiting residential driveways. Residents are very concerned about vehicle speeds that have increased to up to 35 MPH. Residents perceive that commuters are shortcutting on their street due to vehicle volumes up to 1,800 vehicles per day with 180 vehicles during the peak travel hour. During the peak traffic hour, one car passes down the street every 20 seconds.

LOS “E”

Describes living conditions where a residential street carries traffic from eight residential blocks. Due to elevated vehicle speeds and volumes, a high level of caution is necessary when walking across the street, riding bicycles and entering or exiting residential driveways. Vehicle speeds have increased to 35 MPH or more. There is significant commuter shortcutting with up to 2,400 vehicles per day and 240 vehicles during the peak travel hour. It is increasingly difficult to exit driveways during the peak traffic hour with one car passing down the street every 15 seconds.

LOS “F”

Describes living conditions where a residential street carries traffic from significantly more than eight residential blocks. Due to elevated vehicle speeds and volumes, a high level of caution is necessary when walking across the street, riding bicycles and entering or exiting residential driveways. Vehicle speeds have increased to 35 MPH or more. There is significant commuter shortcutting with over 2,400 vehicles per day and 240 vehicles during the peak travel hour. Exiting and entering driveways is difficult and requires approaching vehicles to stop for driveway traffic.

SECTION 7.9
TEMPORARY ROAD STANDARD

A development that proposes to construct a temporary road for vehicular access must meet the following requirements of this section:

1. Bonding – Bonding for the permanent public improvements must be provided to the city prior to construction of the temporary road. Partial bond release requests will not be processed by the city on the public improvements until the temporary road has been paved according to the approved plans and the other provisions in this section.

2. Cross-section – The street cross section from the approved plans shall be followed for temporary roads with the exception that the asphalt section shall be replaced with road base so that there will be road base up to the lip of curb. Prior to paving, road base will be removed to accommodate asphalt, the remaining road base section shall be tested per the requirements of this section.

3. SWPPP – The storm water pollution prevention plan must be in place and maintained on site, according to the approved grading permit, including the use of an approved stabilized construction entrance at the entrance to the site from the paved public right of way. Contractor will take all necessary precautions to prevent mud-tracking from the site onto the paved right of way.

4. Testing – Prior to paving, contractor must have the road base independently verified by a third party testing agency to confirm that it still meets compaction and gradation requirements per the latest edition of the APWA for new roadway construction. Testing location and frequency will be determined by the city engineering inspector.

5. Maintenance – The developer shall maintain the temporary road including but not limited to snow removal, dust control measures, replacement of material due to shedding or rutting.

6. Damaged Infrastructure – Prior to paving a temporary road, all damaged infrastructure within the roadway must be repaired / replaced per city standards.

7. Signage – All signage shall be installed per approved drawings, city standards and specifications or otherwise be approved by the city engineer.

SECTION 7.10
PUBLIC STREET CHECKLIST

Construction of any public street requires a sign off checklist prior to the road being opened to traffic for use by the general public. The checklist must be requested by the Developer. The city's assigned project engineer will prepare the checklist and provide it to the developer/contractor.

CHAPTER 8
STREETLIGHT SPECIFICATIONS

(Updated ~~2-15-22~~**3-7-23**)

SECTION 8.1
STREET LIGHT CATEGORIES

8.1.1 CATEGORY 1, 2, 3, & 4 STREET LIGHT INSTALLATIONS

Street Light		Streets
Category	***Type***	
1	Six-sided Utility Arlington double head fixture with Cincinnati cross arms and Charleston Pole; fitted with In-use Receptacle Cover and GFCI outlet energized by photo cell	Redwood Road, South Jordan Parkway (10400 S & 10600 S); 11400 South; and Jordan Gateway.
2	Six-sided Utility Arlington single fixture with Charleston Pole; fitted with In-use Receptacle Cover and GFCI outlet energized by photo cell	1300 West; 2700 West; 4000 West; 4800 West; 9800 South; 11800 South; and River Heights Drive.
3	Utility Granville with trim tabs and North Yorkshire Pole; fitted with In-use Receptacle Cover and GFCI outlet energized by photo cell	1000 West; 2200 West; 3200 West; 3600 West; 10200 South; and Riverfront Parkway (south of 11400 S).
4	Utility Post Top with Wadsworth Pole	Residential Streets. Residential developments at the developer's expense may upgrade streetlight fixtures to Category 3 type. All fixtures within the development shall be the same type.

**** NOTE: All streetlight wiring shall be suitable for wet conditions placed within PVC conduit.**

**** NOTE:**	**The following specifications apply to both <u>SINGLE POLE</u> and <u>MULTIPLE POLE INSTALLATION (Daisy Chain, etc.)</u>. In addition, the <u>MULTIPLE POLE INSTALLATION</u> shall comply with those items identified specifically below in these specifications.**

SECTION 8.2
INSTALLATION

8.2.1 VOLTAGE

All street lights shall have 120 volt input Voltage (nominal).

8.2.2 WIRE / CONDUCTORS

A. Wire size shall be designed by an electrical engineer with no more than a 3% drop in the nominal voltage at the base of each pole. The minimum wire size shall be #6 AWG THHN copper ~~lines~~ **<u>wire or #4 AL XHHW aluminum wire</u>** from power source to the base of pole.

B. Category #1, #2, and #3 lights shall have the wire sized for an additional 3-AMP's per light pole and shall be included in the design.

C. From pole base or (hand hole) to the fixture head #10 or #12 THHN copper **<u>(or equivalent #8 or #10 XHHW aluminum)</u>** will be allowed.

~~D. No aluminum wire allowed.~~

~~E~~**<u>D</u>**. Wire to be black, white, green or phased taped at both ends.

~~F~~**<u>E</u>**. Run conduit to the lock side of transformer. Leave 8 feet excess wire to transformer or 6 feet excess wire to secondary box as per Rocky Mountain Power (RMP) requirements, so that (RMP) will make the connection. Contractor is able to use HDPE conduit so long as it is schedule 40, grey in color, the wire is the correct size and listed for this use. All installations of HDPE shall be installed according to the current edition of the NEC Section 353 and UL labeled and listed.

~~G~~**<u>F</u>**. Multiple Pole Installation:
Wire size shall be designed by an electrical engineer with no more than a 3% of a drop in the nominal voltage at the base of each pole. The minimum wire size shall be a #6 copper wire **<u>or #4 aluminum wire</u>** suitable for wet conditions. Electrical engineer to submit design drawings to the City for review.

8.2.3 CONDUIT

A. All conduits shall be a minimum of 1-1/2 inch PVC, (2 inch into the transformer), Schedule 40 and grey in color.

B. 90° sweeps/bends shall have a maximum of 24 inch radius and a minimum of 18 inch radius.

C. Conduit shall have a minimum of 24 inches of cover in a utility trench and a maximum of 30 inches of cover (refer to details - diagram sheet). *

D. All conduits shall have an approved cap or duct seal on ends to prevent debris from entering conduit.

E. All conduits shall have pull string.

F. Conduit shall extend a maximum of 3 inches and a minimum of 1 inch above the finished streetlight concrete base. Contractor is able to use HDPE conduit so long as it is schedule 40, grey in color, the wire is the correct size and listed for this use. All installations of HDPE shall be installed according to the current edition of the NEC Section 353 and UL labeled and listed.

G. Multiple Pole Installation:
Conduits will be allowed to be of a larger size as required to accommodate the larger wire sizes. Contractor is able to use HDPE conduit so long as it is schedule 40, grey in color, the wire is the correct size and listed for this use. All installations of HDPE shall be installed according to the current edition of the NEC Section 353 and UL labeled and listed.

H. Maximum number of bends between ground boxes or lights 360 degrees

I. All conduits installed, wire pulled and wire connections made must be performed by a Utah licensed electrician.

J. Conduit shall be installed in the public utility easement behind the sidewalk, adjacent to Rocky Mountain Power.

K. At road crossings, conduit shall be placed in a sleeve to protect the conduit.

* Need to have copy of utility trenching drawing.

8.2.4 GROUND BOX

A. Known as box, vault, flush mount, pull box, enclosure, and junction box.

B. All plastic boxes shall be grey in color with the words “South Jordan City Electric”. See detail sheet for drawing of plastic box lid. Any installations in concrete will require the ground box and lid to be concrete and traffic rated.

C. Lid must be secured with the proper stainless steel bolts, and anti-seize lubricant.

D. 6” of gravel (3/4 minus) shall be placed prior to setting the ground box.

E. Top of ground box shall be placed at finished grade.

F. Conduit shall extend a maximum of 3 inches above the gravel in the base of the ground box and a minimum of 2 inches above gravel in the base of ground box.

G. One ground box shall be installed within 4 feet of the power source (as per Rocky Mountain Power specifications). 8’ x 5/8” copper ground rod must be installed in POC ground box.

H. Wire must extend 18 inches above grade to splice in ground box.

8.2.5 CONNECTIONS

A. Wire nuts shall meet the specifications of a “Wet Location Installation” with silicone inside and will be allowed in the pole base only.

B. Anti-oxidantcompound is required for all aluminum connections.

~~B~~**C**. Mechanical lugs NSi ESSLK – 2/0 or equivalent may only be used in the ground box and shall meet NEC specifications, be UL labeled & listed and be designed for this purpose.

~~C~~**D**. A Littelfuse LEBJJ fuse holder (or equivalent) with weatherproof rubber boots, mechanical connection, 600 volt rated and 30 AMP rated shall be used.

~~D~~**E**. Fuse shall be 10 AMP time delay F.N.Q. 30 amp time delay fuse required in POC ground box.

~~E~~**F**. Fuse holder shall be placed on all hot leads, so that when disconnected the fuse remains in the load side of the holder.

~~F~~**G**. Fuse holder shall be installed only in POC ground box.

~~G~~**H**. No crimp connections will be allowed.

~~H~~**I**. Split bolt connectors will not be allowed.

8.2.6 GROUNDING

A. All grounding and bonding shall be installed according to the current Edition of the NEC Section 250 and UL labeled and listed.

B. When non-metered street lights are installed, article 250.24 of the NEC shall be applied for bonding & grounding applications for service supplied AC systems.

C. Conductor: shall be green

D. Ground Rod or Ground Ring:

1. Ground Rod - 8 feet x 5/8 inch diameter Copper weld/ bonded, cu.

2. At anytime the City may require third party testing at the expense of contractor in addition to any costs to remedy deficiency.

E. Ground Conductor must be secured to ground rods using clamp:5/8 inch cu clad.

F. Burndy KA25U 14 – 1/0 AWG AL/CU mechanical lugs or equivalent shall be used to connect the ground wire to the group clip inside the street light pole.

G. Ground rod shall be a minimum of 2 inches above finished concrete grade for the street light base and a maximum of 3 inches above finished concrete grade for street light bases. See detail sheet.

H. 8’ x 5/8” copper ground rod must be installed in POC ground box and also in street light base.

8.2.7 STREET LIGHT LOCATION

A. Street lights shall be provided at ends of cul-de-sacs, all street intersections, at 200’ spacing (250’ max) on local residential, 300’ spacing (350’ max) on collectors (150’ staggered), and where otherwise determined by the City Engineer or designee.

B. A street light is required at the entrance to any pedestrian pass-through. If the pass-through is longer than 75 feet, another street light is required at the far end. Walkways longer than 150 feet will require additional lights. Vandal resistant bollard lighting may also be required on long walkways.

C. Street lights shall be located on lot lines wherever possible.

D. Street lights shall not be installed within 5 feet of a fixed object unless approved by the City Engineer.

E. Install the first street light in a chain within 15’ from a transformer when possible.

CHAPTER 9

LAND DISTURBANCE DESIGN & CONSTRUCTION STANDARDS

(Updated 07-01-10)

CITY OF SOUTH JORDAN

Land Disturbance Design & Construction Standards

City of South Jordan
1600 West Towne Center Drive
South Jordan, UT 84095

SOUTH JORDAN
UTAH

LAND DISTURBANCE
DESIGN AND CONSTRUCTION STANDARDS

ABBREVIATED
TABLE OF CONTENTS

SECTION	TITLE
1.0	INTRODUCTION AND GENERAL POLICIES
2.0	DESIGN CRITERIA
3.0	MATERIALS
4.0	PALN PREPARATION
5.0	FEES, CHARGES AND REQUIREMENTS FOR AUTHORIZATION OF CONSTRUCTION
6.0	CONSTRUCTION STAKING
7.0	CONSTRUCTION
8.0	ABANDONMENT
9.0	TESTING
10.0	WORK AREA CLEAN-UP
11.0	REQUIREMENTS FOR FINAL ACCEPTANCE

APPENDIX A	BEST MANAGEMENT PRACTICES FOR CONSTRUCTION ACTIVITIES
APPENDIX B	TITLE 16.44 LAND DISTURBANCE ORDINANCE
APPENDIX C	LAND DISTURBANCE PERMIT APPLICATION AND AGREEMENT
APPENDIX D	STORM WATER POLLUTION PREVENTION PLAN (SWPPP)

DETAILED
TABLE OF CONTENTS

SECTION	TITLE	PAGE
1.0	INTRODUCTION AND GENERAL POLICIES	
1.1	Scope	1-1
1.2	Authority	1-1
1.3	Interpretation	1-3
1.4	Definitions and Terms	1-3
1.5	Applicable Codes and Policy	1-19
1.6	Engineering Department Jurisdiction	1-20
1.7	Infrastructure Maintenance and Operations Department Jurisdiction	1-20
1.8	Community Development Department – Building Division	1-20
1.9	Developer Engineer's Responsibility	1-20
1.10	Referenced Specifications	1-21
1.11	City Engineer Acceptance	1-21
1.12	Metric Units	1-21
1.13	Construction Specifications	1-21
2.0	DESIGN CRITERIA	
2.1	Introduction	2-1
	General	2-1
	Design Professionals Qualifications	2-1
	Drainage	2-2
	Erosion and Sediment Control, Vegetation and Re-vegetation	2-2
	Master Plan Compliance	2-3
	Construction of the Project	2-3
	Responsible Agencies	2-4
2.2	Principles of Erosion and Sediment Control	2-4
	General	2-4
	Vegetation as a Solution	2-5
	Scheduling	2-6
	Land Grading for Minimizing Erosion	2-7
	Minimize Disturbance and Buffer Strip	2-8
2.3	Applications of Erosion and Sediment Control Practices	2-9
	General	2-9
	Erosion Control	2-9
	Runoff Control	2-10
	Sediment Control	2-11
2.4	Bioengineering Techniques	2-12
	General	2-12
	Conditions Where Practice Applies	2-12
	Planning Considerations	2-13
	Design Criteria	2-13
	Bioengineering Measures	2-14
	Inspection and Maintenance	2-14

DETAILED
TABLE OF CONTENTS

SECTION	TITLE	PAGE
2.5	Subdivision and Lot Design for Grading and Drainage	2-15
	General	2-15
	Preliminary Design Report	2-15
	Grading and Drainage report	2-15
	Final Design Report	2-18
	Subdivision Design for Grading and Drainage	2-18
	Lot Design for Grading and Drainage	2-18
	Structure Design for Drainage	2-18
2.6	Clearing, Grubbing and Stripping	
	General	2-19
	Vegetative Material Disposal	2-19
	Man-made Material Disposal	2-20
	Topsoil	2-20
2.7	Dust Control	
	General	2-20
2.8	Grading and Excavation	
	General	2-20
	Grading	2-20
	Excavation	2-21
	Fills	2-23
	Buttress Fills	2-26
	Topsoil	2-27
	Slope Protection	2-27
	Building Lots Requiring Additional Fill	2-27
2.9	Erosion Control and Drainage Devices	
	Intervening Terraces	2-28
	Diverter Terraces	2-28
	Vee Channels	2-28
	Inlet Structures, Down-drains and Outlet Structures	2-28
	Runoff Computations	2-29
	Drainage Dispersal Wall	2-29
	Sub-drains	2-29
	Site Drainage	2-29
2.10	Slope Erosion Protection	
	General	2-29
	Sediment and Erosion Control Standards	2-30
	Erosion Control BMP	2-31
	Erosion Control	2-31
	Interceptor, Roadway, and Toe Ditch	2-32
	Brush-layering	2-32
	Cellular Confinement System for Slope Stabilization	2-34
	Erosion Blankets and Turf Reinforcement Mats Slope Installation	2-34
	Live Staking	2-35
	Water-bars and Rolling Dips	2-36
	Slope Drain	2-37

DETAILED
TABLE OF CONTENTS

SECTION	TITLE	PAGE
	Biolog/Straw Rolls	2-38
	Surface Roughening	2-39
	Wattles	2-40
	Retaining Wall	2-41
	Temporary Landscape Irrigation System	2-42
2.11 Channel Erosion Protection		
	General	2-42
	Energy Dissipators	2-42
	Grass-Lined Channel	2-42
	Log Check Dam	2-44
	Riprap	2-44
	Rock-Lined Channel	2-48
	Straw Bale Sediment Barrier	2-48
	Straw Bale Dike	2-49
	Temporary Diversion Dike	2-50
2.12 Storm Drainage System		
	General	2-51
	Retention/Detention Basins	2-51
	Storm Drain System	2-51
	Storm Drain Sediment Protection	2-51
2.13 Streambank Erosion Protection		
	General	2-53
	Coir Roll and Coir Mats	2-54
	Gabions	2-55
	Structural Stream Bank Stabilization	2-57
2.14 Miscellaneous Erosion/Sediment Control Best Management Practices		
	General	2-58
	Construction Entrances	2-59
	Sedimentation Basins	2-60
	Concrete Structures	2-60
	Limits of Disturbance (LOD) Control	2-61
2.15 Vegetation and Revegetation		
	General	2-61
	Planting and Irrigation of Cut and Fill Slopes	2-61
	Vegetation and Re-vegetation Development Standards	2-62
	Effective Planting Plan	2-63
	Erosion Control/Re-vegetation Plan	2-66
	Permanent Seeding	2-67
3.0 MATERALS		3-1
3.1 General Requirements		3-1
3.2 Testing and Final Acceptance of Material		3-2
3.3 Topsoil		3-2
3.4 Erosion Control		3-3
3.5 Limits of Disturbance (LOD)		3-4
3.6 Erosion Control		

DETAILED
TABLE OF CONTENTS

SECTION	TITLE	PAGE
3.7	Retaining Walls	3-7
3.8	Landscape Irrigation System	3-7
3.9	Concrete Structures	3-7
3.10	Riprap	3-7
3.11	Retention/Detention Basins	3-8
3.12	Storm Drain System	3-8
3.13	Permanent Seeding	3-8
4.0	PLAN PREPARATION	4-1
4.1	General	4-1
4.2	Plan Preparation Responsibility	4-1
4.3	Sheet Size and Margins	4-1
4.4	Signature Blocks	4-1
4.5	Cover Sheet	4-1
	Index Map	4-2
	Vicinity Map	4-2
	Bench Marks	4-2
	General Notes	4-2
	As-built Materials List	4-3
	City Engineer's Certification for Approval to Construct	4-3
4.6	Grading Plan and Sediment Control Plan	4-6
4.7	Erosion Control and Revegetation Plan	4-9
4.8	Graphic Scales and North Arrow	4-9
4.9	Procedure for Approval	4-9
4.10	Plan Checking List	4-12
4.11	Standard Language for Dedication of Facilities to City	4-12
4.12	Standard Notes	4-12
5.0	FEES, CHARGES AND REQUIREMENTS FOR AUTHORIZATION TO CONSTRUCT	
5.1	General	5-1
5.2	Submittal of Blueline Prints (Plan Check)	5-1
5.3	Land Disturbance Permit Application Fee	5-1
5.4	Special Provisions	5-1
5.5	Easements	5-1
5.6	Agreements, Bonds, and Insurance Certificates	5-1
5.7	Approval for Construction	5-2
5.8	Special Charges	5-3
6.0	CONSTRUCTION STAKING	
6.1	General Requirements	6-1
6.2	Preservation of Stakes	6-1
6.3	As-Built Drawings	6-1
7.0	CONSTRUCTION	
7.1	General Requirements	7-1

DETAILED
TABLE OF CONTENTS

SECTION	TITLE	PAGE
	Use of this Section	7-1
	Quality of Materials	7-1
	Substitutions	7-1
	Quality of Workmanship	7-2
	Defective Work	7-2
	City Inspection, Field Acceptance and Guarantee	7-2
	Public Relations	7-3
7.2	Construction Sequence – Erosion/Sediment Control	7-3
7.3	Permits	
	Excavation Permit	7-4
	Explosives Permit	7-4
	Land Disturbance Permit	7-4
	Dust Control Permit	7-5
	Storm Water Pollution Prevention Permit	7-5
	Salt Lake County Development and Construction Permit	7-5
	Corp of Army Engineers 404 Permit	7-5
	Utah Department of Transportation (UDOT) Access Permit	7-5
	Utah Department of Transportation (UDOT) Enchroachment Permit	7-5
	Canal Company Discharge Permit	7-5
	Other Permits	7-5
7.4	Inspection	
	General Excavation and Grading Requirements	7-5
	Inspections of Excavations and Fills	7-7
	Additional Inspections or Testing	7-9
	Final Inspection	7-9
	Inspection of Individual Lots	7-9
7.5	Traffic Regulation	7-10
7.6	Clearing and Grubbing	
	General	7-10
	Removal and Disposal of Material	7-10
7.7	Utilities, Existing Facilities and Concrete Removal	
	Abandonment	7-10
	Utilities and Existing Facilities	7-10
	Concrete, Masonry or Mortared Construction Removal	7-11
7.8	Excavation and Trenching	
	General	7-11
	Excavation	7-12
	Shoring	7-12
7.9	Backfill and Compaction	7-12
7.10	Construction Water	7-13
7.11	Subgrade Preparation and Placement of Base Materials	
	General	7-13
	Subgrade Preparation	7-13
	Untreated Base	7-13
7.12	Concrete and Masonry Construction	
	General	7-13

DETAILED
TABLE OF CONTENTS

SECTION	TITLE	PAGE
	Concrete Structures	7-13
	Concrete Curbs & Gutters, Sidewalks, Cross Gutters and Driveways	7-14
7.13	Landscape and Irrigation Systems	
	General	7-14
	Testing	7-14
8.0	ABANDONMENT	8-1
8.1	General	8-1
8.2	Water Lines	8-1
8.3	Structures	8-1
8.4	Easements or Right-of-Ways	9-1
9.0	TESTING	9-1
9.1	General	9-2
9.2	Concrete Testing	9-3
9.3	Soils Testing	9-3
9.4	Storm Drainage System Testing	
9.5	Miscellaneous Testing	10-1
10.0	WORK AREA CLEAN-UP	
10.1	Final Project Clean-up	
11.0	REQUIREMENTS FOR FINAL ACCEPTANCE	
11.1	General	11-1
11.2	Field Acceptance	11-1
11.3	As-Built Drawings Originals	11-1
11.4	Itemized Cost/Additional Fees	11-2
11.5	Other Administrative Items/Including Easements	11-2
11.6	Approval for Acceptance	11-2
11.7	Status during Maintenance and Guarantee Period	11-2
11.8	Exoneration of Surety	11-2
APPENDIX A – Standard Drawings		
APPENDIX B – Title 16.44- Land Disturbance Ordinance		
APPENDIX C – City of South Jordan, Storm Water Management Plan		
APPENDIX D – Land Disturbance Ordinance Plan Check Checklists		
APPENDIX E– Land Disturbance Permit Application and Agreement		
APPENDIX F – Erosion and Sediment Control Plan, Preconstruction Meeting Information		
APPENDIX G – Land Disturbance Permit, Erosion Sediment Control Plan, Inspection and Maintenance Form		
APPENDIX H – Storm Water Pollution Prevention Plan (SWPPP) Template		

SECTION 1.0

INTRODUCTION AND GENERAL POLICIES

1.1 SCOPE

The City of South Jordan, Land Disturbance Design and Construction Standards, establishes uniform policies and procedures for the design and construction of City land disturbance, grading, erosion control, re-vegetation of disturbed areas and control of sediments resulting from construction of private development and City projects. It is not the intent of this standard that any standard of conduct or duty toward the public shall be created or imposed by publication of this standard. This standard is not a substitute for engineering knowledge, experience or judgment of professionals in their area of expertise in the agronomy, re-vegetation, conservation, and engineering discipline. This standard is neither designed as, nor does it establish, a legal standard for these functions. The methods and procedures contained herein are to be reviewed by the developer's engineer or designer using them as applicable to site-specific conditions of the project they are working on. Where actual site conditions deem these standards and procedures not applicable, the engineer or designer shall request a variance from these standards or procedures as provided herein.

The design and construction of grading, erosion control, re-vegetation and sedimentation facilities and other appurtenances in City of South Jordan are to comply with these standards herein called "Land Disturbance Design and Construction Standards (LDDCS)", or the permit requirements of various governing bodies, except where specific modifications have been approved, in writing, by the City Engineer. All submitted plans containing engineering principals shall be signed and stamped by a Civil Engineer and other appropriate professionals. Erosion control plans, re-vegetation plans and/or dust control plans are to be signed and stamped by a qualified Civil Engineer or other appropriate professional. All work is to be in accordance with good agronomy, conservation, and engineering practices.

This document sets forth the procedure for designing and preparing plans and specifications and specifications for area of land disturbances throughout the City. Wherever there are differences between these standards and other county, state or federal regulations, the most stringent or highest requirement shall govern. The specifications and standard drawings contained in this document are for all land disturbances throughout the City. The City has also prepared culinary water, road, and storm drain/flood control design and construction standards for those specific areas. The developer/developer's engineer is to obtain the other design and construction standards to determine how to design these other facilities.

1.2 AUTHORITY

Title 16 Chapter 44 of the City of South Jordan Municipal Code, establishes the legal authority for the erosion, sediment control and re-vegetation requirements set forth in this document. Title 16 Chapter 44, Land Disturbance was established partly as a requirement of the State of Utah's Utah Pollution Discharge Elimination System permit (UPDES) which is a federally mandated requirement of the State.

Since the passage of the Clean Water Act (CWA), the quality of our Nation's waters has improved dramatically. Despite the progress, however, degraded water bodies still existed and the federal government moved to improve the water quality in these water bodies. According to the

1996 Nation Water Quality Inventory, a biennial summary of State surveys of water quality, approximately 40- percent of surveyed U.S. water bodies are still impaired by pollution and did not meet water quality standards. A leading source of this impairment was indicated to be polluted runoff. According to the Inventory, 13-percent of impaired rivers, 21-percent of impaired lake acres and 45-percent of impaired estuaries are affected by urban/suburban storm water runoff and 6-percent of impaired rivers, 11- percent of impaired lake acres and 11-percent of impaired estuaries are affected by construction site discharges.

Phase I of the EPA's storm water program was promulgated in 1990 under the CWA. Phase I relies on National Discharge Elimination System (NPDES) permit coverage to address storm water runoff from: (1) "medium" and "large" municipal separate storm sewer systems (MS4s) generally serving populations of 100,000 or greater, (2) construction activity disturbing 5 acres of land or greater, and (3) ten categories of industrial activity.

The Storm Water Phase II Final Rule is the next step in EPA's effort to preserve, protect, and improve the Nation's water resources from polluted storm water runoff. The Phase II program expands the Phase I program by requiring additional operators of MS4s in urbanized areas and operators of small construction sites, through the use of NPDES permits, to implement programs and practices to control polluted storm water runoff.

Phase II is intended to further reduce adverse impacts to water quality and aquatic habitat by instituting the use of controls on the unregulated sources of storm water discharges that have the greatest likelihood of causing continued environmental degradation. Although the NPDES permit program is a national program, its implementation and permitting is delegated to the states. In the case of Utah, the program then becomes known as the Utah Pollution Discharge Elimination System (UPDES) program. Cities and other governmental entities are then required to receive a permit through the State of Utah under the UPDES permit program.

On March 10, 2003 Phase II of the NPDES became active and all cities smaller than 100,000 are required to submit a NPDES permit and application. In the case of cities in Utah, this became a UPDES permit application that is submitted to the State of Utah, Department of Environmental Quality (DEQ).

The City of South Jordan (City) is subject to Phase II regulations. The City's UPDES permit requires, at a minimum, that the City develop, implement, and enforce a storm water management program designed to reduce to the "maximum extent practicable" the discharge of pollutants from the storm drain system to protect water quality, and to satisfy the requirements of the CWA.

The City's storm water management program must include the minimum control measures included in the General Permit. Implementation of BMP's that comply with permit requirements constitutes compliance with the standard of reducing pollutants to the maximum extent practicable.

In the City's permit application, the City identified and submitted the following information to the State DEQ:

1. The City will implement BMP's for each of the following six minimum control measures:

    a. Public Education and Outreach
    b. Public Involvement/Participation
    c. Illicit Discharges and Improper Disposal

d. Construction Site Storm Water Runoff Control
e. Post-Construction Storm Water Management in New Development and Redevelopment
f. Pollution Prevention/Good Housekeeping for Municipal Operations

2. The measurable goals for each of the BMPs including, as appropriate, the months and years in which the City was to undertake required actions, including interim milestones and the frequency of the action; and

3. The person(s) responsible for implementing or coordinating the City's storm water management program.

1.3 INTERPRETATION

The City Engineer will decide all questions of interpretation of "Best Management Practices" as it applies to good agronomy, re-vegetation, conservation, and engineering practices. The City Engineer may use the future ASTM standards and various standards obtained in published engineering studies and industry publications to guide him or her.

1.4 DEFINITIONS AND TERMS

Whenever in these specifications or in any document or instruments where these specifications govern, the following terms, abbreviations or definitions are used, the intent and meaning shall be interpreted as follows:

ABBREVIATIONS

AASHTO	American Association of State Highway and Transportation Officials
A.B.	Aggregate Base
A.S.B.	Aggregate Subbase
A.C.	Asphaltic Concrete Type A
ACI	American Concrete Institute
ADT	Average Daily Traffic in vehicles per 24 hours
ANSI	American National Standards Institute
APWA	American Public Works Association
ASCE	American Society of Civil Engineers
ASTM	American Society for Testing and Materials
AWWA	American Water Works Association
BMP	Best Management Practice
cfs	Cubic feet per second
EP	Edge of pavement
ES	Edge of shoulder
F	Degrees, Fahrenheit
ft.	Foot
gpm	Gallons per minute
L.O.D.	Limits of Disturbance
Max.	Maximum
Min.	Minimum
O&M	Operations and Maintenance

P.C.C.	Portland Cement Concrete Structures Class A (6 sack) Pavement Minimum Class B (5 sack) Curb, gutters, driveways and walks Class B (5 sack) Higher classes shown on plans will govern
PLS	Pure live seed
psi	Pounds per square inch
PUE	Public Utility Easement
TYP	Typical
UBC	Uniform Building Code
UOSHA	Utah Occupational Safety and Health Administration
UPC	Uniform Plumbing Code

Symbols

C	Centerline
ROW	Right of way line
FL	Flow line
PL	Property line
"R"	Value
≥	Equal to or greater than
≤	Equal to or less than

DEFINITIONS

"Actual Restoration and Re-vegetation Costs"	Costs set by City resolution or ordinance. In the absence of City resolution and/or ordinance or the actual restoration and re-vegetation costs will be determined by three competitive re-vegetation bids conforming to this chapter and 10 percent of the excavation portion of the original bid. In the event the actual re-vegetation costs are challenged by the applicant the cost will be determined as stated herein.
"Agricultural activity"	Plowing, disking, and harrowing the ground surface for the purpose of planting and cultivating crops on parcels historically used for this purpose.
"Anchored Mulch"	Mulch which employs netting, staple, or fastener to anchor material to the soil and/or a mulch material that is crimped or tacked to the soil surface by mechanical means.
"Applicant"	Means any person who submits an application for a permit pursuant to Title 16 Chapter 44, "Land Disturbance".
"Approved" by the City Engineer.	Unless specifically otherwise indicated, this shall mean approval
"Bale Dike"	A bale dike is a temporary barrier consisting of bales installed across a slope, at the toe of a slope, and/or around the perimeter of the construction site.

"Bale Sediment Barrier"	A semi-pervious sediment barrier is a temporary barrier consisting of bales and a rock spillway placed across small drainages or gently sloping swales.
"Best Management Practices"	Practices, procedures or designs used as a standard for a given industry. In this specific case, these 'practices' are for the erosion control industry. Best Management Practices (BMP's) for controlling non-point sources of pollution are the methods, measures, practices, or a combination of practices determined to be the most effective and practicable means (including technological, economic, and institutional considerations) to control non-point pollutants at levels compatible with environmental quality goals. As used in this document, BMP's are synonymous with erosion and sediment control measures.
"Biochemical Oxygen Demand (BOD)"	Consumed during a biochemical oxidation of matter over a specified period of time.
"Bioengineering"	Bioengineering is a method of construction using living plants, or plants in combination with non-living or structural materials. The practice brings together biological, ecological, and engineering concepts to produce living, functioning systems to prevent erosion, to stabilize slopes and to enhance wild life habitat. The application of vegetative practices combined with structural practices to provide a system of practices that create a stable site condition.
"Brush-layering"	Cuttings or branches of easily rooted woody species are layered between successive lifts of soil fill to construct a reinforced slope or embankment. Live branch cuttings laid in crisscross fashion on terraces between successive lifts of soil.
"Buffer Setback"	A strip of land that separates land uses for aesthetic reasons or separate incompatible uses, i.e. residential from Industrial.
"Buffer Strip"	An undisturbed strip of land containing grasses, shrubs and trees adjacent to water bodies engineered for the treatment of storm water.
"Buttress Fill"	A buttress fill is a designed compacted earth fill used for providing lateral support to an un-stabilized earth or rock mass.
"Cellular Confinement System"	A three-dimensional, honeycomb earth-retaining structure used to mechanically stabilize the surface of earth and fill slopes.

"Check Dam"	A check dam is a small temporary dam constructed across a swale, gully, or drainage way to collect sediment and slow water velocities.
"City"	City of South Jordan, Utah
"City Engineer"	City Engineer shall mean the City Engineer of City of South Jordan, or the person(s) engaged by the City and authorized to perform the duties assigned to the City Engineer, and shall include any deputies and representatives.
"Civil Engineer"	A professional engineer in the branch of civil engineering holding a valid certificate of registration issued by the State of Utah.
"Class IV Landfill"	A landfill that is to receive only construction/demolition waste, yard waste, inert waste, dead animals, or upon meeting the requirements of Section 26-32a103.5 and section R315-320-3, waste tires and materials derived from waste tires.
"Clearing & Grubbing"	Moving, removing, displacing, and/or stockpiling, by manual or mechanical means, trees, and other vegetation and/or the top organic layer as described in the geotechnical report. In the absence of a geotechnical report the organic layer will not be greater than eight (8") inches.
"Coir Rolls and Coir Mats"	Coir rolls and coir mats are manufactured from coconut fibers and are frequently used as the structural and rooting medium for bioengineering systems.
"Community Development Director"	That person charged with the responsibility of directing all phases of the Community Development Department and the enforcement of all State statutes and City laws pertaining to his/her office, or his/her duly authorized representative.
"Compaction"	The act of compacting or consolidating soil and rock material to a specified density, and the resulting compacted state of the material.
"Construction site"	Any land area on which the activity of clearing and grubbing, grading, excavating, or filling is occurring.
"Continuous Berm"	A continuous berm is a temporary diversion dike or sediment barrier constructed with infill material, either soil, sand or aggregate, encased within geosynthetic fabric.
"Contract Documents"	The documents used in the construction of a given project including: written and drawings. Written documents may include, but not limited to, the 'Bidding and Agreement Forms and Bonds", "Conditions of the Contract" and "Technical

	Specifications". The drawings for the project are also legally considered part of the Contract Documents and are referenced as such in the written portion of the Contract Documents.
"County"	Salt Lake County, Utah
"Crib Structure"	A hollow structure constructed of mutually perpendicular, interlocking beams or logs.
"Curb Inlet Sediment Barrier"	Curb inlet sediment barriers are temporary barriers constructed from concrete block and gravel or gravel filled sandbags.
"Cutting"	A branch or stem pruned from a living plant.
"Day"	Shall be interpreted as a calendar day, unless otherwise specified.
"Dentrification"	A biological process in which nitrate (NO3), a compound of nitrogen often found in sewage or water, is turned into nitrogen gas, which can dissipate into the atmosphere.
"Detention"	The holding back or delaying of the flow of water, through manmade or natural means.
"Detritus"	A loose mass of decaying material
"Developer"	An individual or organized group; partnership, corporation, etc.; proposing to subdivide or improve land which will require culinary water from the City's system.
"Developer's Engineer"	The engineer licensed by the State of Utah as a civil engineer, employed by the developer, under whose direction construction plans, profiles and details of the work are prepared and submitted to the City for review and approval.
"Dredging"	The practice of deepening a waterway by mechanical means by the removal of sediments.
"Drop Inlet Sediment Barrier"	A drop inlet sediment barrier is a temporary barrier placed around a drop inlet. The sediment barrier may be constructed of bales, wattles, and gravel, gravel and stone, block and gravel, or silt fence material.
"Dry Ravel"	Pertains to slopes whose soil materials are of such a consistency that they separate without the action of water, causing rills, gullies and other types of erosion. This would occur in soil materials where there is very little binder material such as clays and finer silts.

"Earthen Berm"	An earth mound used to direct flow of runoff around or through an area.
"Easement"	A recorded document in which the landowner gives the City permanent rights to construct and maintain City facilities across private or other property.
"Emergent Plants"	Aquatic plants that are rooted in the soil but whose leaves are at or above the water surface.
"Energy Dissipator"	An energy dissipator is a structure designed to slow water velocity and control erosion and encourage sediment entrapment at the outlet of a channel or conduit.
"Enforcement Authority"	The City Engineer, the Engineering Inspector and other designated representatives of the City Engineer, or any duly appointed Code Enforcement Officer or police official charged with the responsibility for enforcement of the provisions of the laws and ordinances of the City of South Jordan.
"Engineer"	A professional engineer or firm of professional civil engineers appointed by and acting for the Engineering Department in the case of a City sponsored capital project. In the case of a developer-sponsored project, the term refers to the engineer hired by the developer and may also be referred to as "developer's engineer".
"Engineering Department"	The City department responsible for planning, designing and construction of the City's roadways and bridges, culinary water, sewer, secondary water and storm drainage systems.
"Engineering Geologist"	An engineering geologist registered by the State and capable of applying the geological sciences to engineering practices for the purpose of assuring that the geological features affecting the location, design, construction, operation, and maintenance of engineering works are recognized and adequately provided for.
"Engineering geology"	The application of geologic knowledge and principles in the investigation and evaluation of naturally occurring rock and soil for use in the design of civil works.
"Erosion"	The process of detachment of soil particles or other surface material by the action of wind, water, snow or ice.
"Erosion Control"	Erosion control is any practice that protects the soil surfaces and prevents the soil particles from being detached by rainfall or wind. Erosion control, therefore, is a source control that treats the soil as a resource that has value and should be kept in place.

"Erosion Control Blankets and Mats"	The installation of protective mulch blankets or soil stabilization mats (turf reinforcement mats) to the prepared soil surface of a steep slope, channel or shoreline.
"Erosion Control Hazard"	An area or areas located within the boundaries of the City, which has been identified by the City Engineer and/or the Erosion Control Specialist as an erosion control hazard area due to the existence of steep slope terrain and/or erosive soils.
"Erosion Control Measures"	The structural and nonstructural Best Management Practices (B.M.P) that prevents displacement of soil particles by wind or water. This includes seeding, mulching, vegetative buffer strips, sod, plastic coverings, riprap, gabions, channel armoring methods, and other measures that prevents the displacement of soil particles.
"Erosion Control Plan Preparer"	A person having the qualifications list herein for Erosion Control Specialist.
"Erosion Control Specialist"	A person having at least ten years of professional level experience in the erosion and sediment control field or a civil engineer having at least six years of professional level experience in the erosion and sediment control field or a Soil Scientist having certified by the American Registry of Certified Professionals in Agronomy and having two years of professional level experience.
"Established Vegetation"	Vegetation that has been planted, germinated, and has growth to accomplish the following: (a) provide a ground cover equivalent to an adjacent undisturbed site. (b) a growth of a native community that is representative of an adjacent undisturbed site. (c) the lack of rill and gully erosion
"Expansive Soil"	Soil with an expansion of four-percent or more with a sixty pound per square foot load applied under standard test methods as set forth by the City Engineer.
"Face Planting"	Planting live cuttings and other vegetation in the frontal openings of retaining structures.
"Field Acceptance"	Field acceptance is when the Engineering Department inspector approves the physical installation of the water system, roads, storm water, sewer, etc.
"Fill"	Deposits of soil, rock, or other materials placed by man.
"Filter Fabric"	A geotextile of relatively small mesh or pore size that is used to (a) allow water to pass through while preventing sediment from passing through, (b) preventing the mixing of soils into a B.M.P

"Filter Strips"	Vegetated strips of land designated to filter storm water and encourage the settlings of pollutants. The vegetation is usually comprised of grasses, not trees or shrubs. Filter strips may be considered as a particular kind of buffer, one specifically engineered to reduce pollutant loads.
"Final Acceptance"	The City Engineer acceptance or final acceptance follows field acceptance and is when the City Engineer approves both physical improvements as well as the administrative items associated with development, and the Infrastructure Maintenance and Operations Department accepts ownership and operations and maintenance responsibilities.
"Finished Grade"	The final grade or elevation of the building site, slope or terrace (0.1 plus or minus feet). "Gabion" Rectangular wire baskets filled with stones used as pervious, semi-flexible building blocks. Live rooting branches may be placed between the rock-filled baskets.
"Geotechnical Engineer"	A civil engineer as described herein with experience of at least ten years as a geotechnical engineer.
"Grade"	The elevation of the ground surface as measured from a known vertical control. Existing Grade means grade currently on the site. Natural grade means the grade unaltered evidenced by the presence of indigenous plants and grasses.
"Grade Stabilization"	The maintenance of a gentle, non-eroding gradient on a watercourse of land surface.
"Grading"	Includes the act or result of digging, excavating, transporting, spreading, depositing, filling, compacting, settling, or shaping of land surfaces and slopes, and other operations performed by or controlled by human activity involving the physical movement of rock or soil.
"Grading and Erosion Control Design and Construction Standards"	The City of South Jordan Land Disturbance Design and Construction Standards.
"Gravity Retaining Walls"	Retaining structures that resist lateral earth forces and overturning primarily by their weight.
"Gulley"	A narrow, rocky valley or channel with steep sides, made by a fast flowing stream
"Headcut Structure"	Where a gully grows and lengthens at its upstream end is called the head-cut or 'nick point'. Head-cut structures consist of rocks, sandbags or other erosion resistant materials placed at the gully

	head-cut to prevent erosion. These components may be used with live willow stakes to promote vegetative growth.
"Hydraulic Planting"	Hydraulic planting is a method of applying erosion control materials (mulch) to bare soil and establishing erosion-resistant vegetation on disturbed areas and critical slopes.
"IBC"	International Building Code
"Induced Wetlands"	Those areas that are inundated by seasonal irrigation Page 11 of 22water which is intended for agricultural purpose.
"Public Works Department"	The City department responsible for operations and maintenance of the City's roadway, culinary water, secondary water, sanitary sewer, and storm drainage system.
"Inspector"	An employee or agent of the City engaged to observe and record field compliance with design criteria, plans and construction standards.
"Land Disturbance"	Any disturbance of native soils, plants, or environment, which causes degradation of the environment and makes it more subject to erosion. Such activities include clearing and grubbing, grading excavation, filling, dredging, construction of earth-filled dams and any other types of earthwork.
"Land Disturbance Design and Construction Standards"	The City of South Jordan Land Disturbance Design and Construction Standards which have been prepared by City staff and reviewed, approved by the City Engineer.
"Land Disturbance Permit"	The land disturbance permit required by the City in order to initiate any type of land disturbance including pioneering roads, deposition of fill material, excavation of soil material, general grading, or other activity conducted by man which will disturb natural vegetation or soil.
"Landfill"	A disposal facility where solid waste is placed in or on the land and which is not a land treatment facility or a surface impoundment. The definition of a landfill is as found in the state codes R315-301-2- 37.
"Land Grading for Minimizing Erosion"	Land grading for minimizing erosion is grading that is intended to minimize the impacts of surface erosion and runoff.
"Landscape Architect"	A landscape architect licensed as such under the laws of the State.
"Land-treatment Land-farming"	Land-treatment, land-farming, or landscaping facility, means a facility or a part of a facility where solid waste is applied onto or

	incorporated into the soil surface for the purpose of biodegradation," The definition of a land-treatment facility is found in the state codes R315-301-2- 38
"Lateral Earth Pressure"	The horizontal pressure exerted by soil against a retaining structure.
"Limits of Disturbance (L.O.D.)"	Means the area of total land disturbance including area to be graded, soil stockpile areas, staging areas and additional area required to accomplish the required grading.
"Lined Channels"	Vegetation lining a natural or constructed waterway, swale or dike to protect it from erosion.
"Live Branch Cuttings"	Living, freshly cut branches of woody shrub and tree species that propagate from cuttings embedded in the soil.
"Live Cribwall"	A hollow, structural wall formed out of mutually perpendicular and interlocking members, usually timber, in which live cuttings are inserted through the front face of the wall into the crib fill and or natural soil behind the wall.
"Live Fascines"	Bound, elongated sausage like bundles of live cut branches that are placed in shallow trenches, partly covered with soil, and staked in place to arrest erosion, shallow soil mass movements, and establish vegetation.
"Live Staking"	Live stake planting involves the insertion and tamping of live, vegetative cuttings into the ground in a manner that allows the stake to take root and grow.
"Lot Level"	Design, construction and infrastructure related specifically to a given lot. The comparison of 'lot level' facilities versus 'subdivision level' facilities is the issue of concern.
"Manufacturer's Recommendation"	The published recommendations of the manufacturer of a specific product for a specific application. In some situations additional manufacturer recommendations would be in order to receive and use. These recommendations are to address the site-specific conditions, site-specific recommendations, and be authored by an employee of the manufacturer. All recommendations will not be interpreted by the City as a guarantee or warranty.
"Mass Movement"	The movement of large, relatively intact masses of earth and or rock along a well-defined shearing surface as a result of gravity and seepage.
"Minimize Disturbance	

and Buffer Strip"	Minimizing disturbance and maintaining buffer strips is a planning process which retains natural vegetative cover and also maintains undisturbed vegetative buffer strips near watercourses.
"Mulch Protection"	A verifiable method of protecting the seed prior to, during and after germination, until the vegetation is established enough to prevent erosion for specific site protection. The mulch protection is to last a minimum of three months to a maximum of four years.
"Mulching"	Mulching is the application of a protective layer of virgin wood fiber or other suitable material to the soil surface. Mulch and/or hydromulch are also used in conjunction with seeding and hydroseeding of critical areas for the establishment of temporary or permanent vegetation. Mulching with straw or wood fiber mulch is commonly used as a temporary measure to protect bare or disturbed soil areas that have not been seeded.
"NPDES"	The National Pollution Discharge Elimination System of the U.S. Environmental Protection Agency and its related requirements. Phase I of the NPDES became effective in 1993 and governed large and medium sized municipalities, and construction sites of 5 acres or more. Phase II was approved on October 29, 1999 and will directly affect activities in City of South Jordan, including all construction sites of 1 acre or more.
"Native Planting Window"	The time period during which native planting materials or seeds are most likely to produce live plant material. This usually occurs during the spring and fall of each year when natural moisture may be available in assisting native plant species in germinating.
"Natural Runoff Channel or Stream"	The predevelopment condition of naturally occurring channels or streambeds. Streambeds or channels caused by naturally occurring water flows. Not man-made.
"Normal Inspection Hours"	Services provided pursuant to or in connection with the provisions of this title shall mean from 8:00 a.m. to 5:00 p.m., Monday through Friday, except holidays. Holidays shall be defined as those weekdays (exclusive of Saturday's) shown as nonworking days on the working day calendar of the City.
"Notice of Noncompliance/ Notice to Correct"	The notice issued by the Enforcement Authority for required action to achieve compliance with the provisions of this chapter.
"Notice of Violation"	A notification issued by the City of a violation or alleged violation of the grading, erosion control, or sedimentation control provisions of this chapter, in which is specified the nature of the violation and the degree of sanctions imposed.

"Opacity"	The factor that is used to determine the thickness or density of fugitive dust leaving a site.
"Overland Release"	An area, swale, or structure that provides for the passage of storm water runoff exceeding the design-frequency storm event of the storm water conveyance system.
"Owner"	May be either the City, individual homeowner, or Developer of the project, depending upon the stage the project. Typically the Developer is the Owner up to and including the time the project is accepted by the City. After final acceptance, the City would be typically considered to be the Owner or ownership responsibilities would be passed on to individual homeowners. The City will own public rights-of-way and private property owners will have ownership of the lots.
"Permanent Seeding"	The establishment of a permanent, perennial vegetative cover on disturbed areas from seed.
"Permit"	See land disturbance permit.
"Permit Holder"	The applicant in whose name a valid permit is issued pursuant to this chapter and the applicant's agents, employees, and designated representatives.
"Person"	Any individual, corporation, partnership, association of any type, public agency, or any other legal entity.
"Photodegradable polypropylene"	Material used in conjunction with erosion blankets and turf reinforcement mats which deteriorates with exposure to sunlight. It initially protects the slope or other denuded area from wind and water erosion, provides seed bed protection, and then deteriorates allowing plant materials to grow up through the material.
"Plans"	Drawings of erosion control measures, roadways, bridges, water pipelines, reservoirs or other structural/nonstructural devices.
"Planting Date"	The date native seed can be applied without temporary irrigation, October 15, through May 1, or as determined by the City's Engineering Department.
"Plate No."	Where not specified to the contrary, this refers to plates attached to these standards.
"Project"	A site that has obtained Final Plat approval from City.
"Pure Live Seed (P.L.S.)"	The actual amount of seed applied to a disturbed area to be re-vegetated. To determine P.L.S. multiply the percent of purity

shown on the seed tag by the percent germination shown on the seed tag then by 100.

"Quadrant Frame Method" — The method of random sampling of an area to determine successful re-vegetation. The following items will be compared to an adjacent undisturbed site: (a) on herbaceous canopy cover equivalent to an adjacent undisturbed site to provide protection against drought and erosion from wind or water. (b) a growth of a native vegetative that is representative of a adjacent undisturbed site species abundance. (c) the lack of rill and gully erosion.

"Required" — Unless specifically otherwise indicated, this shall mean a requirement of the City Engineer.

"Restoration and Re-vegetation Costs" — Costs required for the restoration of disturbed areas and which are set by City resolution or ordinance on a subdivision level.

"Retention" — The holding of runoff in an area without release except by means of evaporation, infiltration, or emergency bypass.

"Revetment" — A facing, as of stone or concrete, to sustain an embankment.

"Riparian Area" — A strip of land that borders a stream or river, often coincides with the maximum water surfaces elevation of the 100 year or record storm.

"Riprap" — Riprap is a layer of stone or rock designed to protect and stabilize areas subject to erosion.

"Rock Lined Channel" — Rock-lined channels are channels or roadside ditches lined with rock or riprap.

"Rough Grade" — The approximate elevation of the ground surface conforming to the proposed design (0.5 plus of minus feet).

"Scheduling" — Sequencing the construction project to reduce the amount and duration of soil exposed to erosion by wind, rain, runoff, and vehicle tracking. The construction sequence schedule is an orderly listing of all major land-disturbing activities together with the necessary erosion and sedimentation control measures planned for a project. This type of schedule guides the contractor on work to be done before other work is started so that serious erosion and sedimentation problems can be avoided.

"Sediment" — The transport of soil or earth material by wind, water, snow or ice.

"Sediment Control" — The structural and nonstructural Best Management Practices that contains the deposited, displaced soil particles caused by erosion.

	This may include (but not limited to) dikes, sediment detention traps, sediment detention basins, filters, fences, barriers, swales, berms, drains, check dams, and other measures that control the deposition of soil or earth material.
"Sedimentation"	The deposition of soil or earth material by wind, water, snow or ice.
"Sequence of Construction"	The suggested procedure of land disturbance and land reclamation to accomplish the goals of this chapter within the City.
"Sheet-flow"	A runoff characteristic which water flows over the land as a thin even layer, not concentrated.
"Silt Fence"	A silt fence is a temporary sediment barrier consisting of filter fabric attached to supporting posts and entrenched in the soil.
"Site"	A parcel or parcels of real property owned by one or more than one person on which activity regulated by this chapter is occurring or is proposed to occur.
"Slope"	A portion of ground forming a natural or artificial incline, including a retaining wall.
"Slope Drain"	A temporary slope drain is a flexible tubing, pipe, overside drain, or other conduit extending from the top to the bottom of a cut or fill slope.
"Slope Scaling"	This remedial activity (usually done by manual labor) involves grading the slope to fill in rills and gullies, slumps, and other depressions that concentrate surface runoff. Slope scaling is necessary to repair slopes prior to wattling, brush packing or erosion control blanket installation.
"Solid Waste Landfill"	Solid waste means any garbage, refuse sludge, including sludge from a waste treatment plant, water supply treatment plant, or air pollution control faulty, or other discarded material, including solid, liquid, semi-solid, or contained gaseous material resulting from industrial, commercial, mining, or agricultural operations and from community actives but does not include solid or dissolved materials in a domestic sewage or in a irrigation return flows or discharges for which a permit is required under Title 19, Chapter 5, Water Quality Act or under the Water Pollution Control Act, 33 U.S.C., Section 1251, et, seq. The definition of a solid wasteland fill is found in the state statues 19-6- 102-17(a).
"Slough Wall"	A wall designed to retain nuisance earth material and keep it in place.
"Soil"	All earth material, of whatever origin, which overlies bedrock.

"Soils Engineer"	A civil engineer duly registered by the State who is experienced in soil mechanics and slope stability analysis. His primary duties shall encompass the investigation of proposed grading sites and plats as related to the stability of the finished graded product. The soils engineer shall have proper laboratory facilities available in which to perform any and all testing required to properly evaluate materials under consideration.
"Staff Engineer"	A registered civil engineer employed by the City and designated by the City Engineer to act on the City's behalf.
"Standard Drawings"	The City's standard drawings for construction projects contained in this standard in Appendix A. Standard drawings also refers to those drawings contained in other design and construction standards of the City including Culinary Water, Road and Bridge, Storm Drain and Flood Control design and construction standards.
"Step Transect Method"	The method of sampling of an area to determine successful re-vegetation. The following items will be compared to an adjacent undisturbed site: (a) on herbaceous canopy cover equivalent to an adjacent undisturbed site. (b) a growth of native vegetative that is representative of a adjacent undisturbed site species abundance. (c) the lack of rill and gully erosion.
"Structural Streambank Stabilization"	Stabilization of eroding stream-banks with designed structural measures.
"Structure"	Anything constructed or erected which requires location on the ground or is attached to something having location on the ground.
"Subdivision Level"	Design, construction and infrastructure related generally to subdivision systems such as drainage, culinary water, wastewater systems, etc. The comparison of 'subdivision level' facilities versus 'lot level' facilities is the issue of concern.
"Surface Roughening"	A technique for roughening a bare soil surface with furrows running across the slope, stair stepping, or tracking with construction equipment. Tracks must be accomplished with indentations running on the slope contour.
"Swales"	Shallow grassed trenches that are wider than they are deep that provide a specific pathway for incoming flow.
"Technical Specifications"	Sections of the construction specifications in Appendix B of the Land Disturbance Design and Construction Standards
"Temporary Sediment	

Basin"	A pond created by excavation in construction of an embankment and designed to retain or detain runoff sufficiently to allow excess sediment to settle.
"Temporary Seeding"	The establishment of a temporary vegetative cover on disturbed areas by seeding with appropriate and rapidly growing annual grasses and/or forbs.
"Terrace"	A horizontal surface or step in a slope.
"Theoretical Detention Time"	The time for a runoff event is the average time parcels of water reside in the basin over the period of release from the B.M.P.
"Top-soiling"	Top-soiling is the preservation and use of topsoil to enhance final site stabilization with vegetation.
"Vegetated Structures"	A retaining structure in which living plant materials, cuttings, or transplants have been integrated into the structure.
"Vegetative Cuttings"	Live, cut stems and branches of plants that will root when embedded or inserted in the ground.
"Vegetative Measures"	The use of live cuttings, seeding, sodding, and transplanting in order to establish vegetation for erosion control and slope protection work.
"Verifiable Testing Method"	A method or material that has been tested by an independent testing facility under similar conditions. Example, existing site conditions have sandy soil with slope of a slope of 2 feet horizontal to one foot vertical (2:1). An acceptable erosion control material would have published test results in sandy soil with slope of 2:1. (i.e. Texas Transportation Institute, Utah Water Research Lab)
"Water-bars and Rolling Dips"	Ridges or ridge-and-channels constructed diagonally across a sloping road or utility right-of-way that is subject to erosion.
"Water Quality B.M.P"	A B.M.P. specifically designed for pollutant removal
"Watercourse"	A river, stream, creek, canal, basin, lake, pond, waterway, or channel, natural or man-made, having a defined bed and banks. Whenever a watercourse consists of both an ordinary channel and an overflow channel, the watercourse is deemed to include all property lying between the banks of the overflow channel. Watercourse would include both perennial and ephemeral flows situations.
"Wattles"	Wattles or live fascines are live branch cuttings, usually willows, bound together into long, cigar shaped bundles used to stabilize

slopes and stream-banks. Wattles may also be straw materials used for temporary sediment control.

"Wet Weather Plan" — A detailed erosion and sediment control plan and construction sequence that clearly shows how construction will process after October 1 of each year until May 1, of each year.

"Wetlands" — Those areas that are inundated or saturated by surface or ground water at a frequency sufficient to support, and that under normal circumstances do support, a prevalence of vegetation typically adapted for life in saturated soil conditions, such as swamps, bogs and marshes. Jurisdictional wetlands are those wetlands regulated by the U.S. Army Corps of Engineers.

"Yard Waste" — Vegetative cover matter resulting from landscaping, land maintenance, and clearing operations including grass clippings, pruning, and other discarded material generated from yards, gardens, parks, and other similar types of facilities. Yard waste does not include garbage, paper, plastic, sludge, septage, or manure.

1.5 APPLICABLE CODES AND POLICY

A. Ordinances, requirements and applicable standards of governmental agencies having jurisdiction within the City's service area shall be observed in the design and construction of roadways. Such requirements include but are not limited to current revisions of the following:

1. Municipal Code of City of South Jordan
2. State of Utah, Department of Environmental Quality, Division of Solid and Hazardous Waste, Solid Waste Permitting and Management Rules, R315-301 through 320
3. State of Utah, Department of Environmental Quality, Division of Air Quality (Dust Control Permit Requirements)
4. State of Utah, Department of Environmental Quality, Division of Water Quality (UPDES Requirements)
5. U.S. Army Corp of Engineers
6. Natural Resources Conservation Service

A complete listing of all reference material is included in the back of these standards.

B. The clearing, grubbing and disposal of vegetative material needs to be in accordance with State and county regulations, which apply to solid waste. This type of material has been determined to meet the requirements of solid waste as defined earlier in this section. Regulations which affect this disposal include:

1. R315-301-4 Prohibition of Illegal Disposal or Incineration of Solid Waste states:

   "No person shall incinerate, burn, or otherwise dispose of solid waste in any place except at a facility which is in compliance with the requirements of Rules 315-301 through 320 and other applicable rules."

2. The regulations dealing with landfills are enforced on the local level by the counties the landfill or alleged violation to landfill regulations is in. In the event, the counties regulations are more restrictive than the State regulations the counties regulations govern. Salt Lake County regulations are more restrictive than the states, so the Salt Lake County's regulations govern.

1.6 ENGINEERING DEPARTMENT JURISDICTION

The Engineering Division is responsible for all land disturbance activities throughout the City until said areas have been stabilized with vegetation, asphalt, or concrete and accepted by the City.

1.7 INFRASTRUCTURE MAINTENANCE AND OPERATIONS DEPARTMENT JURISDICTION

The Public Works Department is responsible for the operation and maintenance of all public roadways, sanitary sewer, storm drainage, secondary water and culinary water systems within the public right-of-way of the City.

1.8 COMMUNITY DEVELOPMENT DEPARTMENT – BUILDING DIVISION

The Building Division is responsible for the residential and commercial building sites after final grade has been reached. The re-vegetated areas outside of the right-of-way and storm water management facilities are the only exceptions.

1.9 DEVELOPER ENGINEER'S RESPONSIBILITY

These standards establish uniform policies and procedures for the design and construction of the City grading, erosion, re-vegetation and sediment control facilities. This standard is not a substitute for the knowledge, experience, or judgment of professionals in their respective area of expertise in the agronomy, re-vegetation, conservation, and engineering discipline. The methods and procedures contained herein shall be reviewed by the developer's engineer or designer using them as applicable to site-specific conditions of the project they are working on. Where actual site conditions deem these standards and procedures not applicable, the engineer or designer shall request a variance from these standards or procedures as provided herein.

It is the developer engineer's responsibility to be aware of the City's ordinance for grading, erosion, re-vegetation, and sedimentation control improvements and to indicate any areas, which requires work in these areas. This responsibility shall include investigating any changes from the Master Plan necessitated by development subsequent to the Master Plan, although the above shall not relieve the developer from the responsibility to provide an approved system consistent with Engineering Department requirements.

All plans, specifications, report or documents pertaining to erosion control, vegetation or re-vegetation shall be prepared or reviewed by certified professionals. Each of these documents shall be signed and stamped with a professional engineer seal, to indicate responsibility for them. A wet stamp is required on all documents except reproducible plans, where a stamp on the original is acceptable.

A "Preliminary Review" and or "Plans Approved for Construction" stamp or signature of the City on the plans does not in any way relieve the developer's engineer of the responsibility to meet all

requirements of the City. The plans shall be revised or supplemented at any time it is determined that the City's requirements have not been met. Generally, plans that are signed as being authorized for construction will not require revisions based upon subsequent revisions to these standards, however, when in the Engineering Department's opinion, a change to the project is necessary, based upon a significant change in the standards, which significantly affects public safety, future maintenance costs, or similar concerns, such a change may be required during construction by the City Engineer. Changes may also be required in the case where a developer does not proceed to construction within the time allowed in the agreement with the City.

1.10 REFERENCED SPECIFICATIONS

References to standards such as AASHTO, APWA or ASTM shall refer to the latest edition or revision of such standards unless otherwise specified.

1.11 CITY ENGINEER ACCEPTANCE

The City Engineer will not accept the land disturbance until all applicable requirements of these Standard's and of the City of South Jordan Municipal Code have been met.

1.12 METRIC UNITS

These standards do not contain metric conversions in some sections because of the extent of numerical data or information.

1.13 CONSTRUCTION SPECIFICATIONS

Nothing contained in the construction specifications in Appendix B, or in any other part of this standard as implying the City will pay for any of these improvements. In addition to the construction specifications being used for defining private development work, they are also used for City capital improvement projects, and therefore contain some language about methods of payment.

SECTION 2.0

DESIGN CRITERIA

2.1 INTRODUCTION

A. **General** - The City boundary includes the region generally east of the Oquirrh Mountains, south of 9400 South, west of the I-15 Freeway, and south to 11800 South. A map showing the City's boundary is contained in the standard drawings at the back of this document.

Within the boundaries of City of South Jordan there are several historical and environmental features, which have contributed to the past and present character of City of South Jordan. The Kennecott Copper Mine, the historical Bonneville Lake shoreline and the wetland areas scattered throughout the City of South Jordan area are just a few of these features.

These features also serve as winter rangeland for deer and elk and the wetland areas support several species of migratory birds. The educational and recreational experiences to be found in these areas are second to none. However, during the development surge in the late 1990's, City of South Jordan experienced several development related items, which appeared to threaten these unique areas, which have concerned City of South Jordan. The City of South Jordan recognizes that the preservation of the mountain ranges, wetlands and other sensitive areas, enhance the natural scenic beauty of the area and also sustains the long-term potential for maintaining property values. This philosophy also encourages quality development while maintaining the original identity and character of the sensitive areas that originally attracted people to the South Jordan area.

The sensitive areas spoken of also include elements, when balanced, provides environmentally sound ecological systems which prevent flooding, erosion and other natural hazards. For these reasons, the City Council has determined that in order to promote and protect health, safety, and welfare of the residents of the City of South Jordan and at the same time recognizing individual rights to develop private property, which will not be prejudicial to the public interest, it has been necessary to enact the standards and procedures contained herein.

The City's Engineering Division is responsible for all studies, design and construction for all land disturbance, grading, erosion control, re-vegetation efforts, and sedimentation facilities and the Public Works Department is responsible for all operations and maintenance once they have been accepted by the City.

B. **Design Professionals Qualifications** – A number of design professionals are involved in the land disturbance design and implementation phase of a project. These include civil engineers, geotechnical engineers, erosion control specialists, and other professionals necessary to properly design and inspect the project. The following are generalized list of work activities which require professional qualifications to perform:

1. Grading – Work under this item is required to be done by a combination of Civil Engineer and Geotechnical Engineer. These specialties are to be registered in the State of Utah. In addition to the design of a portion on the project, the engineer who performed the design is also to perform the inspection and verification of the

work and a certification is to be provided to the City indicating the work performed meets the requirements of the original design. If design changes are contemplated during construction, the design engineer is to approach the City with a proposed revised plan, which is to be reviewed and approved in writing by the City prior to initiating work on the revision.

2. **Drainage** – Work under this item is required to be done by a Civil Engineer. The Civil Engineer is to be registered in the State of Utah. In addition to the design of this portion on the project, the engineer who performed the design is also to perform the inspection and verification of the work and a certification is to be provided to the City indicating the work performed meets the requirements of the original design. If design changes are contemplated during construction, the design engineer is to approach the City with a proposed revised plan, which is to be reviewed and approved in writing by the City prior to initiating work on the revision.

3. **Erosion and Sediment Control, Vegetation and Re-vegetation** – Work under this item is required to be done by a qualified Certified Professional Erosion and Sediment Control Specialist or a person having adequate education and years of experience to indicate the person has sufficient knowledge to properly complete these types of designs and plans. The following general categories of persons may be considered qualified to perform this type of work. If through performance of the work it becomes apparent the individual does not possess the necessary knowledge to properly complete the work, the design firm will be requested to find another individual to complete the work or the City may require another firm be retained to complete the work.

   a. A person having at least ten years of professional level experience in the erosion and sediment control field and has been accepted for testing to become a Certified Professional Erosion and Sediment Control Specialist, or
   b. A Certified Professional Erosion and Sediment Control Specialist who is actively involved in designing, installing, or regulating projects within the erosion control field, or
   c. A Civil Engineer/Landscape Architect having at least six years of professional level experience in the erosion and sediment control field, or
   d. A Soil Scientist having certification by the American Registry of Certified Professionals in Agronomy and having two years of professional level experience in erosion and sediment control, or
   e. A person have a Bachelor of Science* degree plus six years of professional level experience in the erosion and sediment control field.
   f. A person with a Master of Science* degree plus four years of professional level experience in the soil erosion and sediment control field, or
   g. A person with a Ph. D* plus two years of professional level experience in the soil erosion and sediment control field.

   ***Note:** Degree in engineering (agricultural, civil, or environmental), geology, soil science, natural resource science or management, or a related field is acceptable.

Professionals, which are required to be licensed, are to be registered in the State of Utah. In addition to the design of this portion on the project, the professional who performed the design is also to perform the inspection and verification of the work and a certification is to be provided to the City indicating the work performed meets the requirements of the original design. If design changes are contemplated during construction, the design professional is to approach the City with a proposed revised plan, which is to be reviewed and approved in writing by the City prior to initiating work on the revision.

C. **Master Plan Compliance** – In designing facilities within the City, Developers and their engineers shall comply with the City's current master plans, the Land Disturbance Design and Construction Standards, Storm Drainage, Flood Control and Transportation master plans apply specifically, Parks and Trails, along with other master plans, which the City has adopted.

D. **Construction of the Project** – In planning for construction of the project, the Developer needs to take into account the amount of disturbance, which may impact the project and in what order will need to be created to construct the project. Strict controls need to be placed on the Developer's contactor to minimize the amount of disturbed soil and maximize the amount of natural vegetation preserved.

1. Project Phasing – Vegetation cover and associated roots of native plants provide tensile strength to the soil and reduce the potential for excessive erosion. When vegetation can be maintained in an undisturbed state, the amount of sediment coming off the site is minimal and the inclusion of structural/nonstructural Best management Practices (BMP's) is reduced.

   The construction project should be designed, selected and laid out so that it fits into existing land contours. Changing the contours significantly from existing grade will disturb more soil and increase development costs in grading, erosion control measures, sediment control and re-vegetation and will also disturb the atheistic value of the land.

   Clear and grub only those portions of the site where it is necessary for construction. The point to be emphasized is the less soil disturbed relates directly to reduced development costs.

2. Maximize the natural vegetation preserved - Preservation of natural vegetation on a site needs to be planned before the site disturbance begins. Preservation requires good site management to minimize the impact of construction activities on existing vegetation. The following is to be clearly indicated on the construction plans:

   a. Survey and stake the limits of disturbance (LOD) and have the City Inspector or Erosion Control Specialist review staking.
   b. Clearly mark the trees and shrubs not to be disturbed within the LOD.
   c. Create barriers to prevent the ground at the base of the trees and shrubs from being disturbed.
   d. Create natural vegetation buffer filter strips that are adjacent to roads and streams. The buffer filter strip width is to be designed based on

riparian habitat, vegetative growth and pollutants to be removed for the water. Each buffer requires a site-specific design refer to the B.M.P. buffer section for design criteria.

E. **Responsible Agencies** – The following are agencies with which the Developer will, or may need to coordinate during construction of the project:

1. Utah Department of Environmental Quality, Division of Air Quality – The Utah Department of Environmental Quality, Division of Air Quality is responsible for ensuring compliance with its requirements for all areas of the City. The Developer or his contractor is responsible for obtaining an air quality permit from this agency and is responsible for ensuring that operations of the project comply with the permit if the site is over one (1) acre.

2. Utah Department of Environmental Quality, Division of Water Quality – The Utah Department of Environmental Quality, Division of Water Quality is responsible for ensuring compliance with its requirements for all areas of the City under the Utah Pollution Discharge Elimination System (UPDES) requirements. The Developer or his contractor is responsible for obtaining a UPDES permit from this agency and is responsible for ensuring that operations of the project comply with the permit.

3. Utah Department of Environmental Quality, Division of Solid and Hazardous Waste – The Utah Department of Environmental Quality, Division of Solid and Hazardous Waste is responsible for ensuring compliance with its requirements for all areas of the City as it regards green waste or other solid waste. The Developer or his contractor is responsible for obtaining the necessary permits and approvals from this agency for the project and is responsible for ensuring that operations of the project comply with these permits.
4. City of South Jordan – City of South Jordan also has several ordinances and standards, which the Developer and his contractor need to be aware of and comply with. These include:

   a. Title 16, Chapter 44 - Land Disturbance Ordinance
   b. Land Disturbance Design and Construction Standards
   c. South Jordan City Design and Construction Standards

2.2 PRINCIPLES OF EROSION AND SEDIMENT CONTROL

A. **General** - Severe erosion is caused by the action of wind, rainfall, snow and runoff on bare soil. Clearing, grading, and other construction activities remove the vegetation and compact the soil, increasing both runoff and erosion. Excessive runoff causes gully erosion, increased stream bank erosion, poor water quality and results in increased off-site erosion, sedimentation, mudflows and flooding problems. Effective erosion and sediment control can be achieved by careful attention to the following principles:

1. Protect the land surface from erosion.

2. Manage runoff and keep water surface velocities low.

3. Capture sediment on-site.

4. Integrate erosion and sediment control with the construction schedule.

5. Inspect and maintain the erosion and sediment control practices before, during and after construction.

The following are principles for controlling erosion and off-site sedimentation from construction sites:

1. Fit the development to the existing topography, soils, and vegetation as much as is possible.

2. Schedule construction operations in order to minimize soil exposure during the wet season.

3. Minimize disturbance and soil exposure by retaining natural vegetation, adopting phased construction techniques, and using temporary cover.

4. Vegetate and mulch all denuded areas to protect the soil from winter rains. The primary efforts for controlling sediment pollution from construction sites are to minimize raindrop impacts on bare soil.

5. Utilize proper grading, barriers, or ditches to minimize concentrated flows and divert runoff away from denuded slopes or other critical areas.

6. Minimize the steepness of slopes and control the length of slopes by utilizing benches, terraces, contour furrows, wattles or diversion ditches.

7. Utilize riprap, channel linings, or temporary structures in the channel to slow runoff velocities and allow the drainage ways to handle the increased runoff from disturbed and developed areas.

8. Keep the sediment on-site by utilizing sediment basins, traps, or sediment barriers.

9. Monitor and inspect sites frequently to assure the measures are functioning properly and correct problems promptly.

B. Vegetation as a Solution

Dense, healthy vegetation and the associated leaf litter protect the soil from raindrop impact. Raindrop impact is a major force in dislodging soil particles, which then allows them to move down slope or form a crust on the soil surface. When a crust forms on the soil surface the rainfall infiltration rate decreases and runoff increases.

Vegetation also protects the soil from sheet and rill erosion. It shields the soil surface from the transport of soil particles and scour from overland flow (sheet flow) and it decreases the erosive energy of the flowing water by reducing velocity.

The shielding effect of the plant canopy and leaves is augmented by roots and rhizomes that hold the soil in place, improve the soil's physical condition, and increase the rate of

infiltration, further decreasing runoff. Plants also remove water from the soil through transpiration, thus increasing its capacity to absorb water.

Suitable vegetative cover provides excellent erosion protection, and reduces the need for high cost, low efficiency, and high maintenance sediment control measures. Vegetative cover is relatively inexpensive to achieve and tends to be self-healing; it is often the only practical, long-term solution of stabilization and erosion control on most disturbed sites.

Initial investigation of site characteristics and planning for vegetation stabilization reduces its cost, minimizes maintenance and repair, and makes other erosion and sediment control measures more effective and less costly to maintain. Permanent erosion control (post-construction landscaping) is also less costly where soils have not been eroded.

Exposed sub-soils are generally difficult to amend, are infertile, and require more irrigation. Natural, undisturbed areas can provide low-maintenance landscaping, shade, and privacy. Large trees increase property values when they are properly protected during construction.

Besides preventing erosion, healthy vegetative cover provides a stable land surface, reduces heat reflectance and dust, restricts weed growth, and complements architecture. The result is a pleasant environment for employees, tenants and customers, and an attractive site for homes.

Property values can be increased dramatically by small investments in erosion control. The final landscaping represents a small fraction of total construction costs, but can contribute greatly to an increased market value of the development. Healthy vegetation and planned development will reduce concentrated flows and peak discharge, thus reducing channel erosion and flooding. Good, healthy vegetative cover greatly reduces the environmental impacts that poor water quality and habitat reduction is having on rivers and streams.

C. **Scheduling**

1. Purpose: Following a specified work schedule that coordinates the timing of land-disturbing activities and the installation of control measures is perhaps the most cost-effective way of controlling erosion during construction. The removal of surface ground cover leaves a site vulnerable to accelerated erosion. Construction procedures that limit land clearing provide the timely installation of erosion and sedimentation controls, and restore protective cover quickly can significantly reduce the erosion potential of a site.

2. Design Considerations:

   a. Project design considerations: Design project to integrate into existing land contours. Significant re-grading of a site will require more costly erosion and sedimentation control measures and may require installation of on-site drainage and sediment control facilities.
   b. Incorporate existing natural areas: Inventory and evaluate the existing site terrain and vegetation. Disturbance of highly erosive natural areas (e.g., steep, unstable slope areas and watercourses) should be minimized,

while protecting other areas may enhance site aesthetics. Construction should not disturb theses areas

c. Avoid rainy periods: Schedule major grading operations during dry months of April through October. Allow enough time before rainfall begins to stabilize the soil with vegetation or physical means or to install temporary sediment trapping devices.

d. Practice erosion and sediment control year round: Erosion may be caused during dry seasons by "freak" rainfall, wind and vehicle tracking. Therefore, keep the site stabilized year-round, and maintain wet season sediment trapping devices. Material which becomes too dry and causes a dust problem will need to be wetted to meet City, County and State requirements.

e. Apply perimeter control practices: Protect the disturbed areas from off-site runoff and prevent sedimentation damage to areas below the development site by applying perimeter control devices.

f. Minimize soil exposed at one time: Schedule projects to disturb only small portions of the site at any one time. Complete grading as soon as possible. Immediately stabilize the disturbed portion before grading the next portion. Practice staged seeding in order to re-vegetate cut and fill slopes as the work progresses.

g. Trenching: Close and stabilize open trenches as soon as possible. Sequence trenching projects so that most open portions of the trench are closed before new trenching is begun.

h. Maintain erosion and sediment control during construction period, start to finish.

D. Land Grading for Minimizing Erosion

1. Purpose: Where land grading is necessary for road or building construction, these land-grading practices are intended to minimize the erosion potential and facilitate plant establishment.

2. Design Considerations: Design considerations should include the following:

   a. existing contours;
   b. land use;
   c. vegetation;
   d. soil;
   e. drainage;
   f. slope stability;
   g. slope length;
   h. slope angle;
   i. space limitations;
   j. erosion potential of land disturbance; and
   k. erosion and sediment control measure practicality.
   l. Existing or proposed wetlands

   Development should fit existing topography as much as possible so that land disturbance is minimized.

Slope steepness and excessive slope lengths should be kept to a minimum. Benches, steps, or contour furrows can be installed on long slopes to break up the slope length. A bench should be graded back towards the slope and drain with a gentle gradient to a stable outlet. Drainage from upland areas should be diverted away from exposed slopes.

E. **Minimize Disturbance and Buffer Strip**

1. Purpose: Erosion can be reduced ninety-eight (98%) percent by protecting the soil from raindrop impact. Existing native vegetation usually provides the best soil protection. One of the most effective erosion control measures is to only disturb areas immediately needed for construction.

   Water quality and wildlife habitat degradation can be greatly reduced by maintaining streamside buffer strips and riparian corridors. These buffer strips act to filter sediment from the surface runoff before it reaches the watercourse. The small drainage and intermittent streams and channels are the sediment delivery systems to rivers and lakes. If sediment can be kept out of the delivery systems, by maintaining buffer strips, then the sediment will not impact the fisheries or cause other water quality impacts.

2. Planning Considerations:

   a. Existing native vegetation should be incorporated into the final landscaping plan. It is adapted to the site, drought tolerant, and will provide shade and erosion protection. Shrubs or trees can be thinned and pruned for beauty and fire hazard reduction.
   b. Existing trees should be protected as per City ordinances or other development requirements.
   c. If the area is not disturbed then it does not require erosion control and concentrated flows down slope will be greatly reduced.
   d. Buffer strips around the perimeter of a site can reduce or eliminate off-site sedimentation.

3. Design Criteria:

   a. Designate areas of no disturbance. Clearly show on the SWPPP plans, and flag in the field areas of no disturbance and construction vehicle exclusion.
   b. Designate trees and shrubs that are to be preserved.
   c. Designate watercourse buffer-filter strips on the site design plan. See Guide to Small Roads, USDA-SCS for more information.
   d. Maintain and preserve riparian and naturally vegetated buffer strips along watercourses.
   e. The width of a buffer strip between a road and the stream is recommended to be 50 feet plus four times the slope of the land in percent, measured between the road and the top of stream bank. Coordinate with setback requirements for canal and channel setbacks.
   f. Buffer width in feet = 50 + 4(% slope).
      Example: For a 10% slope, buffer length is 50 feet + (4)(10) = 90 feet.

2.3 APPLICATIONS OF EROSION AND SEDIMENT CONTROL PRACTICES

A. **General** – The common reason erosion and sediment control practices are ineffective is that the wrong BMP is implemented for the type of control needed. A sediment control BMP should not be used for erosion control and an erosion control BMP should not be used when a runoff control is needed. When the needed control is treated with the wrong type of BMP, failure normally occurs.

For example, a silt fence is placed a cross a slope to prevent erosion. Maybe the designer wanted to stop sheet and rill erosion. In actual practice the silt fence collected and concentrated water, which was diverted to a low spot where the fence becomes overloaded and failed. An erosion control BMP should have been chosen to treat the erosion problem. Silt fences are intended for sediment control and should, therefore, be installed in relatively flat areas suitable for ponding water and depositing sediment. A good way to avoid confusion when choosing BMPs is to have a clear understanding of what type control is needed and what are the corresponding BMPs.

There are three general categories of controls that have distinct treatments associated with them;

1. erosion control
2. runoff control
3. sediment control.

B. **Erosion Control** - Erosion control is any practice that protects the soil surfaces and prevents the soil particles from being detached by rainfall or wind. Erosion control, therefore, is a source control that treats the soil as a resource that has value and should be kept in place.

What are some erosion control BMP's?

1. Key Point: The most efficient and economical long-term method of controlling sheet, rill and raindrop impact erosion is to establish vegetative cover from seed. Vegetation can reduce erosion by more than ninety (90%) percent by protecting the soil from raindrop impact and sheet erosion.

   When erosion control BMPs are implemented and maintained, the amount of sediment associated with runoff waters can be dramatically reduced. Whenever possible prioritize or design for erosion control first and sediment control second. Some important points to remember:

   a. Exiting or new vegetative cover is the primary erosion control practice.
   b. Retain existing vegetation by minimizing disturbance and scheduling large land disturbances during periods of expected dry weather.
   c. Establishing cover immediately after disturbance (staging) is important.
   d. Temporary erosion control is usually achieved by seeding and watering with fast growing annual grasses and/or protecting the soil with mulch or

erosion blankets. Plant seed mix is to be approved by the Engineering Department and the Parks Department staff.

e. Permanent erosion control usually involves planting perennial grasses, shrubs, and trees.

2. Key Point: The selection of the right plant material for the site, choosing the correct mulching technique and proper seedbed preparation are critical for effective erosion control. Surface roughening, contour furrows, and stepped slopes are essential to establish vegetation. Straw bales are not recommended in the city.

3. Costs - Non-structural erosion control practices are generally more cost-effective than sediment control. For example, the cost of temporary seeding one acre would be comparable to the cost of installing 200 LF of silt fence (for a 1 acre drainage) or equivalent to the cost of constructing a temporary sediment trap designed for a one-acre drainage. However, the practice of temporary seeding would probably be more effective, while the silt fence and sediment trap will require regular and costly maintenance.

4. Key Point**:** Erosion control is, generally, more cost-effective than sediment control and requires less maintenance and repair.

C. **Runoff Control (See Appendix A - 5200)**

1. General - Construction activities usually result in the removal of vegetative cover and increases in impermeable surfaces, both of which increase the volume and velocity of runoff. Increases of storm water volume and velocity lead to increased erosion (gulling) in the sediment transport and off-site delivery (sedimentation). These increases must be addressed when implementing erosion and sediment control.

   Runoff control measures are those practices, which mitigate for the erosive and sediment transport forces of storm water during and after construction activities. Some examples of runoff control might include, outlet protection (energy dissipators), diversion dikes and swales, temporary slope drains, rock lined channels, turf reinforcement mats, grass-lined channels, and temporary stream crossings.

2. Key Point: Runoff control involves the use of structures to reduce velocities and/or safely carry storm water in a manner, which reduces erosion and sediment transport.

   The energy equation, **E = mv2**, where E = erosive Energy, m = unit density of water, and v = the runoff velocity, demonstrates that if you reduce the velocity of running water by 1/2 you will reduce the erosive energy by 4 times. To reduce runoff energy implement practices which use the **4 D's**.

   Decrease - decrease the amount of runoff
   Detain - decrease the velocity
   Divert - divert runoff to less erodable areas
   Dissipate - spread the runoff out

Rill and gully erosion is caused by concentrated runoff. Methods that reduce runoff velocity, such as check dams, vegetated channels or riprap, will also reduce the potential for sediment transport. An alternative to reducing the runoff energy of storm water is to convey that runoff through or along non-erodable surfaces, i.e., culverts and slope drains.

3. Key Point: Temporary check dams, especially straw bale dams, are not recommended for any flowing water conditions. Straw bales and silt fences are sediment control BMP's, not runoff control BMP's and should not be placed in channel flow (runoff) areas.

   What are some runoff control BMP's?

D. **Sediment Control (See Appendix A – 5300)**

1. General - Sedimentation is the deposition of soil particles that have been transported by water or wind. The amount of sediment produced during construction is directly proportional to the degree and effectiveness of erosion control practices implemented. The quantity and size of the particles transported increases with the velocity of the runoff or wind.

   Sediment control is used to keep sediment, the product of erosion, on-site. Sediment control involves the construction of structures that allow sediment to settle out of suspension. Sediment control structures, therefore, require frequent inspection and maintenance. Generally, sediment is retained on-site by two methods: a) slowing runoff velocities, as they flow through an area, sufficiently so that sediment cannot be transported, and b) impounding sediment-laden runoff for a period of time so that the soil particles settle out.

   Sediment controls are not filters. Practices referred to as "sediment filtering" actually works by slowing water velocities and allowing sediment impoundment to de-water in a very slow and controlled manner. For effective sediment control planning and design, materials such as geotextiles, silt fences, straw wattles and straw bales should be considered for their ability to impound water and slow runoff velocities, not for their ability to "filter" sediment.

2. Key Point: Effective sediment control involves ponding sediment-laden runoff long enough for the soil particles to settle out of suspension. Reducing runoff velocities will also reduce sediment transport and thereby help retain sediment on-site.

   What are some effective sediment control BMPs?

3. Key point: Structural sediment control can be divided into three general types; 1) sediment basins, 2) sediment traps, and 3) sediment barriers.

   a. Temporary sediment basins are recommended for the outlet of disturbed drainage areas ranging from 5 ac. to 100 ac. , see Appendix A 5332. Sediment basins should be designed by a qualified professional.

b. Temporary sediment traps are recommended for disturbed drainage areas less than 5 ac. A typical sediment trap designed to handle 0.5-inches of runoff over a 24 hour period would require a settling zone capacity of 67 yd3 / ac. of contributing drainage area and a sediment storage capacity of 33 yd3 / ac. of drainage area.

(1) Excavated sediment traps require less rigorous design work, are smaller in size and they are easier to construct, therefore, a preferable alternative is to sub-divide large projects into smaller sub areas (less than 5 ac) and utilize numerous sediment traps. Multiple traps and / or additional volume may be required to accommodate site specific rainfall and soil conditions. This approach may facilitate phased construction along relatively narrow highway right of way.

(2) Excavated storm drain inlets are small excavated sediment traps located at storm drain inlets are effective as part of phased construction. The design capacity of excavated inlet sediment traps shall be 67 yd3 / acre of contributing drainage area. These excavations are temporary and they are not very effective for trapping small particles (silt and clay) and they should not be used where runoff velocities are high.

c. Sediment barriers are BMP's that are intended to separate sediment from sheet flow runoff. They function by reducing runoff velocity and ponding small quantities of storm water. Sediment barriers are only intended for areas experiencing sheet flow and they must be installed in areas that can pond water and accumulate sediment and, most importantly, the must be accessible for cleanout. Sediment barriers are the most common type of practices used on construction sites. The most common types of sediment barriers are as follows:

(1) Silt fence
(2) Straw bale dike
(3) Continuous berms
(4) Storm drain inlet barriers
(5) Straw wattles

2.4 BIOENGINEERING TECHNIQUES

A. **General:** Bioengineering uses plants and structures to function together in mutually reinforcing or complimenting roles. The structural components initially protect and stabilize the site and create a stable zone for the plants to grow.

Bioengineering techniques are used to prevent erosion on upland slopes, to protect stream banks and channels against wave erosion in the coastal zones, or water quality ponds and these biotechnical earth support methods can also be utilized to provide slope stability.

B. **Conditions Where Practice Applies:** Soil bioengineering techniques are generally appropriate for:

1. Slopes to prevent surface erosion

2. Cut and fill slopes stabilization
3. Shallow mass wasting
4. Gully repair
5. Stream bank stabilization
6. Shoreline stabilization
7. Wetland mitigation
8. Watershed rehabilitation

C. **Planning Considerations:**

1. Soil bioengineering generally requires minimal access for equipment and workers and cause relatively minor site disturbance during installation. These practices are therefore considered appropriate for environmentally sensitive areas, such as parks, woodlands, riparian areas and scenic corridors where aesthetic quality, wildlife habitat and similar values may be critical.

2. Bioengineering systems are often more cost effective than the use of vegetation or structural solutions alone. Using indigenous materials accounts for some of the cost effectiveness because plant costs are limited to labor for harvesting, handling and the direct costs of transporting plant material to the site.

3. In bioengineering, the plant material itself may provide both the structural and vegetative components of the design. For example, in willow wattles, live staking and brush-layering the woody material is used to provide initial structural protection and later, vegetative cover.

4. Bioengineering systems are most effective when installed during the dormant season, usually late fall, winter or early spring. Constraints on planting times or availability of the required quantities of suitable plant materials during allowable planting times may limit the usefulness of bioengineering methods.

5. Bioengineering systems are strong initially and grow stronger with time as the vegetation becomes established. Bioengineering systems may withstand heavy rainfalls immediately after installation. Even if vegetation dies, its plant material and surface residue continues to play an important protective roll during vegetation establishment.

6. Soil bioengineering is useful on small, highly sensitive or steep sites where the use of machinery is not feasible.

7. Bioengineering practices are limited by the available medium for plant growth-rocky or gravelly slopes may lack sufficient fines or moisture to support plant growth or hard pans may prevent the required root growth. Adequate natural precipitation may also limit the applicability of bioengineering techniques.

D. **Design Criteria:** Choose plant materials that are adapted to the site conditions. Local stands of willow or other suitable species are already well suited to the climate, soil conditions and available moisture and they make good candidates for survival on most sites.

When choosing live willow material for bioengineering applications, remember that young (less than 1 year old) wood or suckers will often sprout easier under optimum conditions, but healthy, older wood (1 to 4 years old) has greater vegetative (energy) reserves necessary to consistently sprout and the older wood is much stronger. If possible, mix younger wood with older wood for the bioengineering application such that a majority of the material is 1 to 4 years old.

Research indicates that all cuttings should be soaked for a minimum of 24 hours, whether they are stored or harvested and immediately installed (Hoag 1991; Hoag et al. 1991; Hoag et al. 1992). Some research recommends soaking the cuttings for as much as 10 to 14 days (Briggs and Munda 1992; Frenchel et al. 1988).

E. **Bioengineering Measures:** The following practices have specific construction recommendations in this manual. For more information of these practices refer to the appropriate BMP.

1. Vegetated rock gabion: Is a structure built of metal wire baskets filled with rock and soil. These structures are then inter-planted with woody plant material. See Appendix A - 5405

2. Straw rolls: Are long bags or nets filled with straw or similar material. They are placed along the contour of a slope or stream bank in order to reduce erosion and sedimentation. Commonly uses wood or live stakes to anchor the roll in place. See Appendix A – 5250.

3. Live stake planting: Live stake planting is the planting of live, rootable, vegetative cuttings into the ground. See Appendix A - 5220

4. Branch-packing: Consists of alternative layers of live branch cuttings and compacted backfill to repair small-localized slumps and holes in slopes.

5. Brush-layering: Cuttings or branches are layered between successive lifts of soil fill to construct a reinforced slope. See Appendix A – 5200.

6. Willow Wattles: Are woven bundles of woody branches typically from a species that is very rootable. This bundle is place along the contour of a slope or stream bank in order to reduce the length of the slope and provide vegetation as a buffer zone. They commonly have wood or live stakes to anchor the wattle in place. See Appendix A – 5260.

7. Coir rolls: Fiber filled mesh logs used to stabilize shorelines, stream banks and wetlands. Coir rolls resist stream bank and wave erosion and provide a stable substrate for plant establishment. See Appendix A – 5250.

8. Coir mats: Coir mats are dense, biodegradable mats are usually made of coconut fiber (coir), used to protect stream banks and wetland shores from erosion, trap sediment and provide a stable substrate for wetland plants. See Appendix A – 5210.

F. **Inspection and Maintenance:** Regular inspection and maintenance of bioengineering installations should be conducted, particularly during the first year. Prompt correction of

any failures is essential to prevent major problems from developing. For the first 3 months, weekly inspections need to be made. After the three-month period, inspections can go to every two weeks for tow months, and then every mother thereafter.

2.5 SUBDIVISION AND LOT DESIGN FOR GRADING AND DRAINAGE

A. **General** – The City's basic philosophy of subdivision and lot design for grading and drainage is that the lot is to be so designed that the lot drainage be directed toward the street for disposal by the City's storm drainage system without negatively impacting lots by abrupt changes in grade. It is also the City's philosophy to have each lot graded so as to maximize the amount of infiltration of storm water into the individual lot without increasing the potential for damage to structures constructed on the lot. Designers of subdivisions are also to include features on each lot, which prevent wherever possible, the cross-drainage of one lot to another, except in dedicated drainage easements. Where storm water drainage cannot be directed toward the public street, the designer is to provide for a subdivision level drainage system which is a private drainage system in the side and/or rear yards which provide for cross-lot drainage. Subdivision level storm water is to be disposed of to an approved storm water facility, which is to be approved by the City Engineer.

B. **Preliminary Design Report** - The developer is responsible for preparing a preliminary design report for this portion of the work and submitting it to the Engineering Department for review and approval, prior to proceeding forward with final design. The preliminary design report shall include preliminary information on geological, geotechnical and soils related issues related to the specific project. It shall also include preliminary information regarding the proposed storm drainage system for the project indicating how the applicant intends to grade the lots, streets and other portions of the project to address storm water runoff for the entire project. The intent of the preliminary design report is to provide sufficient information for general approval by the City prior to proceeding to final design. One of the purposes of this report is to streamline the development process by minimizing the need for costly revisions to the designs by involving the City early in design procedures. The applicant is to receive approval of the report prior to proceeding to final design.

C. **Grading and Drainage Report** - The developer shall prepare a grading and drainage report which is to include plans for storm water management, erosion control, and grading describing the methods by which surface water, natural drainages, flooding, erosion and sedimentation loss, and hydrologic hazards will be controlled during and after construction. The plan shall include:

1. Stamps and Signatures of Licensed Professionals – The report is to include the stamps and signatures of the registered professionals who have prepared the report. Their stamps and signatures shall be affixed to the first interior page of the report. The professionals preparing this report are to be licensed professionals in the State of Utah for their respective professions. Those preparing the report shall include: a licensed civil engineer for the grading and drainage portions of the project, a certified erosion control specialist for the erosion and sedimentation loss portions of the work. The City may accept other professionals who have had at least 6 years experience with erosion and sedimentation loss for this portion of the report including landscape architects and civil engineers. The City reserves

the right to accept or reject qualifications of professionals proposed to prepare the report.

2. Grading Plan – The report is to include a grading plan for the project. This plan is to show present and proposed topography to include elevations, lines and grades including the location and depth of all proposed fills and cuts of the finished earth surfaces using a contour interval of one or two feet.

3. Graded Area – The report is to include the proposed area to be graded, which is to be clearly delineated on the plan. Identify depths of cuts and fills. Also, identify finish floor elevations of all structures and show those elevations on the plans.

4. Drainage and Erosion Calculations and Details; Hydrologic Hazards – The report is to include all assumptions, information, calculations and proposed details used for design and construction of debris basins, impoundments, diversions, dikes, waterways, drains, culverts and other water management or soil erosion control measures shall be shown. Drainage calculations shall determine runoff volume and peak discharge using the "Rational Method",

   "SCS Curve Number Method", or appropriate equivalent. Data provided is to include:

   a. Rainfall depth, duration and distribution
   b. Watershed slope and drainage area delineation
   c. Land condition or watershed surface
   d. Existing and proposed topography of the drainage area
   e. Description of soil conditions of watershed. Erosion calculations are to employ predictions of soil loss sheet erosion using the Universal Soil Loss Equation or appropriate equivalent. Data to be provided should include factors of:

      (1) Rainfall intensity and duration. See South Jordan City Standards.
      (2) Soil erodibility
      (3) Land slope and length of slope or topography
      (4) Condition of the soil surface and land management practices in use
      (5) Surface cover, grass, woodland crops, pavements, etc.

5. Erosion Control During Construction – The grading and drainage report will be prepared by the developers engineer in which he will describe the methods intended to be employed to control the erosion and sedimentation increase while in construction.

6. Interim Stabilization during Construction – The developer/builder is responsible for interim stabilization of all disturbed areas during the period of construction to prevent erosion offsite effects and for final stabilization once construction is completed. The report prepared will address these issues.

7. Limit of Watershed/100-Year Flood Plain Maps – The report is to include maps of the development site (1"=200'), which define the boundaries of any 100-year flood plain and the limits of the watershed.

8. Existing Drainage Channels/Permits – The report shall include a separate map, which indicates the historic drainage channels associated with the project. Existing drainage channels shall remain as historically located except that roads and utilities may be installed across such channels as approved by the Planning Commission. Where these channels must be modified, permits must be obtained from Salt Lake County Flood Control, applicable canal companies, the Utah Division of Water Rights, as appropriate, and the US Corps of Engineers, as applicable. The developer shall provide copies of approval letters to the City. Structures and or lots shall be arranged so as to insure adequate setbacks from all drainage channels based upon the100-year storm.

9. Storm Water Collection Facilities – The report shall show any existing and proposed storm water collection facilities associated with the project. Storm water and sediment collection facilities shall be required to be constructed on development sites in accordance with the following:

   a. Such facilities shall be the first improvements or facilities constructed on the development site.
   b. Such facilities shall be designed to detain the storm water flows, including sediment loads, of a 10-year storm while allowing offsite discharge not to exceed 0.2 cubic feet per second per acre.
   c. Such facilities shall be so designed as to divert surface water away from cut faces or sloping surfaces of a fill.
   d. The existing natural drainage system will be improved as required by the City.
   e. Where drainage channels are required, wide shallow swales lined with appropriate vegetation, rock, or other approved material are to be used instead of cutting narrow, deep drainage ditches.
   f. Flow retarding devices, such as detention ponds, check dams and recharge berms are to be used where practical to minimize increases in runoff volumes and peak flow rates due to development.

10. Minimize Disturbance of Vegetation Cover – The Developer is to indicate in the report how he intends to minimize the disturbance of vegetative cover within the project. Construction of the development shall be such that it minimizes the disturbance of vegetation cover.

11. Erosion Control Measures to Reduce Suspended Solids – The report to be prepared is to indicate the erosion control measures, which will be employed at the site, during construction and for the long-term. Erosion control measures on the development site shall be required to minimize the increased suspended solids loading in runoff from such areas. A drainage system shall be designed to control storm water erosion during and after construction.

12. The report shall indicate that no grading or stripping is to be permitted unless the appropriate equipment is used and except as part of a development plan approved by Engineering and the Planning Commission

13. Hydrologic Hazards - A description of any hydrologic hazards associated with the proposed site and adjacent area is required and are to be discussed in the report. Hydrologic hazards might include high water table, surface water impoundments, gradient of the property, flood plains, etc.

D. **Final Design Report** - The developer is responsible for preparing a final design report for this portion of the work and submitting it to the City for review and approval, prior to the approval of the land disturbance permit. The final design report shall include the preliminary design report, the geotechnical report, the grading and drainage report and the final grading design and design of the subdivision drainage facilities related to the erosion and sediment report indicating the BMP's to be used for a specific project. The intent of the final design report is to provide sufficient information to the City to obtain their approval prior to proceeding with the preparation of plans and specifications.

E. **Subdivision Design for Grading and Drainage** – Each subdivision is to be designed to provide a subdivision level drainage system. This subdivision level drainage system is to be composed of both public and private drainage facilities. The public drainage systems are to be located within the City's street right-of-ways and other fee parcels and the private systems are to be located within easements which are to be controlled by easement restrictions and covenants, codes and restrictions (CC&R's), and enforced by private agreements or through neighborhood associations. Drainage facilities located within private easements are not being considered as City responsibilities unless approved by the City Engineer.

In cases where lots cannot be graded to allow for the total amount of storm drainage to go to the streets, the designer shall provide for side yard and rear yard drainage facilities, which will convey individual lot drainage from each, lot and dispose of it properly. All attempts are to be made to drain individual lot storm water to the street.

F. **Lot Design for Grading and Drainage** – Each lot is to be designed to provide for drainage into the subdivision level drainage system. This lot level drainage system is to be composed of private drainage facilities, i.e. grass-line swales, grading to allow drainage toward the street, rear yard storm water drainage facilities to pass water from one lot to another, etc. The private drainage systems are to be located within dedicated easements, which are to be administered and controlled by private parties. Drainage facilities located within private easements are not to be considered as the City's responsibility.

In cases where lots can not be graded to allow for the total amount of storm drainage to go to the streets, the designer shall provide for side yard and rear yard drainage facilities which will convey individual lot drainage to the subdivision level storm water drainage system. All attempts are to be made to drain individual lot storm water to the street.

No streets with cul-de-sacs are allowed unless measures are approved by the City Engineer. The facilities must meet minimum standards of the building codes as well.

G. **Structure Design for Drainage** – All attempts need to be made to divert lot level storm drainage to he public right-of-way. This includes all impervious surface areas on each lot including roof drains, driveways, and other impervious surfaces. In the case of roof drains, the designer of the subdivision and lot are to provide for roof drainage discharge

to the public street, wherever possible. The lot designer must provide for facilities to convey this type of storm water from the downspout to the curb and gutter by overland flow. The City will not allow the boring or cutting of curb and gutter to installation of piping systems for this purpose. The Engineering Department and Building and Safety Division are to review and approved these measures.

2.6 CLEARING, GRUBBING AND STRIPPING (See Appendix B – Section 02112)

A. **General** – All clearing, grubbing and stripping work to be completed shall first be designed by a registered Geotechnical engineer and approved by the City. It consists of clearing of all structures, trees, brush and other organic and deleterious materials from the project site so that excavation and grading can begin. In preparing for this phase of work, the Developer needs to know that only certain options are open for disposing of material cleared from the site. The Developer or his contractor must obtain prior approval of the process requested.

During the clearing, grubbing and stripping work if the soils and/or vegetation indicate the area is a wetland, all work will cease at no cost to the City, until mitigation plan can be reviewed by the Army Corp of Engineers or the Natural Resource Conservation Service (NRCS).

B. **Vegetative Material Disposal** - For trees, brush and other vegetative materials only the following disposal options are approved:

1. Burn the material – This is an option but a number of agencies will need to be consulted and permits obtained prior to using this method. Permits/approvals will need to be received from:

   a. South Jordan Fire Department (WJFD).
   b. State of Utah, Department of Environmental Quality, Division of Air Quality (DEA)
   c. State of Utah, Department of Environmental Quality, Division of Water Quality
   d. City of South Jordan, Community Development and Engineering departments
   e. Other agencies as needed.

2. Haul material to an approved landfill – This option will require that the Developer collect all vegetative material and haul it to a City approved landfill. The Developer will need to provide evidence that a landfill will accept the material and then evidence must also be provided which indicates the material was actually deposited at said landfill. The City must approve this method and destination prior to the Developer proceeding with this work.

3. Chip and shred the material – If the Developer selects this disposal option, all vegetative materials will need to be disposed of through a mechanical chipping/shredding process. The machine to be used shall be a tub grinder through which all material shall be processed. Once the vegetative material has been processed through the tub grinder, the material will be evening distributed across the topsoil it is to be mixed into and thoroughly mixed. See Appendix B – Section 02112.

The Developer and his contractor are hereby put on notice that any deviations from these three processes will result in the Developer and his contractor removing the material from where it has been deposited and properly disposing of the material. Disposal of the material by cutting it, running a tracked bulldozer over it to crush it and then mixing it with soil and disposing of the material on site is illegal and unacceptable. The use of such unapproved methods will be reported to the State of Utah, Department of Environmental Quality, Division of Solid and Hazardous Waste who also has jurisdiction of illegal landfills.

C. **Man-made Materials Disposal** - For all man-made materials, such as processed wood, concrete, dry wall, adhesives, etc., only disposal at an approved landfill site is acceptable. The Engineer shall design the work covered under subsection 2.2 to meet the following technical specification section:

1. Section 02112. – Clearing, Grubbing and Stripping

D. **Topsoil** – The topsoil contains valuable native seeds that commonly are not available to include in a native re-vegetation seed mix; an example is the State's native flower Sego Lily. Therefore, the construction plans should clearly identify the locations of the topsoil stockpile areas.

The Developer's engineer should use the project geotechnical report to determine the area required to stockpile the topsoil. To minimize the handling of the topsoil, construction sequencing should also be used in determining the topsoil stockpile locations. The construction should be clearly indicated.

1. Stockpile locations indicate by drawing a line around the area and adding a distinctive pattern within the area.

2. Sediment controls used to keep the topsoil from contaminating the surrounding areas.

3. Erosion controls to prevent wind, water, snow and ice erosion.

2.7 DUST CONTROL

A. **General** – The Developer is responsible for controlling the dust produced at his project and shall provide the necessary mitigation to keep the dust to the acceptable limits identified in the air quality permit obtained from the State of Utah, Department of Environmental Quality, and Division of Air Quality. Ignorance of these codes and statutes is not an acceptable reason for not complying with these requirements.

2.8 GRADING AND EXCAVATION

A. **General** – All grading work shall be done under the City's supervision, which shall include an engineering geotechnical consultant, retained and paid by the City and reimbursed by the Developer. The consultant shall be answerable to the City only.

B. **Grading** – All grading work to be completed shall first be designed by a registered geotechnical engineer and approved by the City. As part of the approval process, the

Developer shall prepare plans and specifications for the project, which identify existing topography and geology and indicate methods and processes to be used in doing the grading. Once the City has approved the work, a geotechnical engineer shall have a representative on site at all times grading is being done and must oversee grading. The geotechnical engineer shall be retained and paid by the City and reimbursed by the Developer to the City. Once work has been completed, the Developer engineer shall prepare record drawings indicating the 'as-constructed' condition of the work.

The Engineer shall design the work covered under subsection 2.8 to meet the following technical specification sections:

1. Section 02200 – Earthwork

2. Section 02210 – Site Grading

C. **Excavation** – Excavation shall be performed to the lines and grades indicated on the Contract Documents. During excavation, material satisfactory for backfilling shall be stockpiled in a safe manner. Excavated material not required or not satisfactory for backfill shall be removed from the site. Excavation shall be braced and supported as need to prevent the ground, adjacent to the excavation, from sliding or settling. Localized slides or settlements shall be promptly removed and corrected by the Contractor.

1. Requirements. All land disturbance related construction, that a Land Disturbance Permit is required, or work shall have the land disturbance permit available on-site and shall be subject to inspections by authorized employees of the City, and certain types of work to be determined by the City Engineer shall have either continuous or constant inspection and supervision by a registered civil engineer, and/or other appropriate consultants, soils engineer, and engineering geologist as a condition of the issuance of the land disturbance permit. Prior to issuing a stamped and signed grading certificate by the civil engineer responsible for the grading operation, a final inspection shall be made of all construction or work for which a land disturbance permit has been issued.

2. Exposure of work. Whenever any work on which inspections are required, as specified in this section, is covered or concealed by additional work without having first been inspected, the Construction Manager may require, by written notice, that such work be exposed for examination. The work of exposing and recovering shall not entail expense to the City.

3. Notices. The land disturbance permit holder or his agent shall notify the Construction Manager twenty-four (24) hours in advance of the time when the grading operation is ready for each of the following inspections:

   a. Initial inspections. When the land disturbance permit holder is ready to begin work but before any clearing and grubbing is started;
   b. Toe inspections. After the natural ground is exposed and prepared to receive fill but prior to the placing of any fill. Approval for placing fill shall not be made until all debris and unsuitable material has been removed from the site to an approved location;
   c. Sub-drain inspections. Inspections shall be required on all sub-drains after the installation but prior to the placement of any fill;

d. Excavation inspections. After the excavation is started but before the vertical depth of the excavation exceeds ten (10') feet;

e. Fill inspections. After the fill emplacement is started but before the combined vertical height of the lift exceeds ten (10') feet;

f. Drainage device inspections. After the forms, steel reinforcement, and pipe are in place but before any concrete is placed;

g. Rough grading. When all the rough grading has been completed. This inspection may be called for at the completion of the rough grading without the necessity of the City Engineer having previously reviewed and approved applicable reports;

h. Rough grading certification. A conditional interim certificate may be issued to the City Engineer to allow the issuance of building permits. This certificate shall in no way exonerate the applicant from completing the grading;

i. Final certification. When all work, including the installation of all drainage structures, other protective devices, the compaction of trench backfill, and planting and slope stabilization, has been completed and the "as built" plan and required reports have been submitted;

j. Other inspections. In addition to the called inspections provided by this section, the City Engineer may make any other inspections of any work to ascertain compliance with the provisions of this chapter and other laws; and

k. Interrupted grading. When the land disturbance permit holder is ready to resume work, but before any grading or brushing is started, the land disturbance permit holder or his agent shall notify the Construction Manager twenty-four (24) hours in advance of the time when the grading operation is ready.

4. Certification. The Developer's Engineer shall certify to the City Engineer, upon the completion of the grading work, that all grading work has been done in compliance with all approved grading plans and reports and that all applicable Building Code regulations shall be administered by the office of the Building Official thereafter.

5. Issuance of certificates. Upon the final inspection when it is found that the work authorized by the land disturbance permit, including the installation of all drainage structures, has been satisfactorily completed in accordance with the requirements of this chapter, a grading certificate covering such work shall be issued by the Developer's Engineer to the City Engineer.

6. Final reports. Upon the completion of the work, the City Engineer may require the following reports and information:

a. A report from a registered civil engineer certifying that all grading, lot drainage, and drainage facilities have been completed in conformance with the approved plans and the provisions of this chapter and that the graded site will support residential or commercial type structures, whichever is applicable;

b. A soils engineering report including, but not limited to, certification of the soil bearing capacity, summaries of field and laboratory tests, locations of tests, expansive soil classification lot by lot, and slope tests

taken in the fills showing the limits of compacted fill on an "as built" grading plan;

c. An engineering geology report by the engineering geologist, based on the final contour map, including specific approval of the grading as affected by geological factors. Where necessary, a revised geologic map, cross sections, and any recommendations necessary shall be included; and

d. When "as built" grading plans are required, as determined by the City Engineer, such plans shall be signed by the supervising civil engineer, the soils engineer, and the engineering geologist, when applicable, for their portions of the work.

e. Electronic copy of detention basins with volumes and calculations.

The Engineer shall design the work covered under subsection 2.4 to meet the following technical specification section:

1. Section 02222 – Excavation and Backfill for Structures

D. **Fills** – All work performed under this item shall be under the direct supervision of a registered geotechnical engineer. The Developer shall be responsible for design and obtaining approval of the design from the City, prior to proceeding with construction. A geotechnical engineer shall also have a representative at the site during all times work is being performed on this work. The geotechnical engineer and his staff shall be retained by the City and directly paid for by the City from a deposit for this work from the Developer. The Contractor shall comply with these design and construction standards and the Contract Documents for the project in constructing the work.

1. Height. No finished fill slope shall exceed a vertical height of twenty-five (25') feet unless approved by the City Engineer and Planning Commission. If a fill slope is permitted above such height, a horizontal terrace with a minimum width of twenty-five (25') feet may be required to be installed at each one hundred (100') feet of vertical height, and intervening terraces also may be required.

2. Slope. No fill shall be made which creates any exposed surface steeper in slope than three (3) horizontal to one vertical. Exceptions are:

a. The City Engineer may authorize a fill slope which is steeper in slope than two (2) horizontal to one vertical and is less than six (6') feet in height, if:

(i) The applicant can demonstrate that because of special circumstances applicable to the property, including size, shape, topography, location, or surroundings, the strict application of this section would deprive such property of the ability to be reasonably developed; and

(ii) The applicant produces sufficient data from a soils engineer, an engineering geologist, and a landscape architect to demonstrate that the material of which the slope is composed and that the material underlying the slope is capable of permanent stability on a steeper slope, and that the required slope planting can be adequately maintained.

3. Unstable material. The City Engineer may require that the fill be constructed with an exposed surface less than three (3) horizontal to one (1) vertical if, under particular conditions, such flatter surface is necessary for stability or safety.

4. Fill slope limits. Toes of fill slopes shall not be made nearer to a project property boundary line than one-half (1/2) of the height of the fill but need not exceed a horizontal distance of twenty (20') feet. Fill slopes shall not be divided horizontally by property lines, and fill slopes occurring on a side or rear lot line shall be made a part of the downhill lot. If the City Engineer determines such requirement is unnecessary because of special conditions, he may make adjustments as a condition of the land disturbance permit.

5. Intervening terraces. Terraces shall be paved (reinforced concrete or gunite) terraces, shall have a minimum width of six (6') feet, shall be extensively landscaped in accordance with an approved landscaping plan, and shall be spaced at vertical intervals of twenty-five (25') feet; provided, however, for slopes less than forty (40') feet in vertical height, the terraces shall be approximately at mid-height. For slopes less than three (3) horizontal to one vertical, or where soil conditions require additional intervening terraces may be required.

6. Compaction. All fills shall be placed, compacted, inspected, and tested in accordance with the provisions of this subsection. If the strict enforcement of the provisions of this subsection is determined by the City Engineer to be unnecessary because of the proposed or probable use of the land, he may waive the requirements. The requirements of this subsection shall not be waived when structures are to be supported by the fill, or if the fills are being placed in areas to be designated as hillside, or where they are necessary as a safety measure to aid in preventing the saturation, settling, slipping, or erosion of the fill.

   a. The natural ground surface shall be prepared to receive fill by removing vegetation, non-complying fill, topsoil, and/or porous, compressible soil. Where natural slopes are five (5) horizontal to one (1) vertical or steeper, and the height of the fill is twenty (20') feet or greater, benching into sound bedrock or other competent material shall be required. Fill slopes, which toe on natural slopes, shall be provided with adequate drainage.
   b. No deleterious material shall be permitted in fills. Except as otherwise permitted by the City Engineer, no rock or similar irreducible material with a maximum dimension greater than eight (8") inches shall be buried or placed in fills.
   c. Upon recommendations made by a soils engineer and approved by the City Engineer prior to the grading of any project, rock with dimensions from eight (8") inches to thirty-six (36") inches may be placed in compacted fill. Such oversized rocks shall not be in the upper ten (10') feet of compacted fill or nearer than twenty (20') feet to the surface of any fill slope. Such rock areas shall be shown on "as built" plans and certified to be compacted by the soils engineer.
   d. The fill shall be spread in a series of layers, each not exceeding eight (8") inches in thickness, and shall be compacted by an approved method after each layer is spread.

e. The moisture content of the fill material shall be controlled at the time of spreading and compacting to obtain the required relative compaction and avoid excessive pore pressure as the fill increases in depth.

f. All fills shall be compacted to a minimum of ninety (90%) percent (unless under roadways) of the maximum density as determined by ASTM D 1557-66T, Method A or C, modified to three (3) layers. If the required degree of relative compaction cannot be attained on sloped surfaces, the slope shall be cut back until the compacted inner core is exposed.

g. The field density shall be measured in accordance with the procedure specified in ASTM D 1556-58T, or a later revision, using the optional base plate and making a suitable adjustment for volumes of rocks in the test hole or other approved testing methods giving equivalent test results.

h. A field density test, as set forth in this subsection, shall be taken for each eighteen (18") inches of fill, or portion thereof, measured vertically from the lowest point of the area to be filled, or for each one thousand (1,000) cubic yards of fill placed. In addition, in the case of subdivisions, at least one field density test shall be taken on each lot, which receives fill.

i. All fills regulated by the provisions of this chapter shall be tested for relative compaction by the soils engineer. A certificate of compliance with the terms of this section and the land disturbance permit, setting forth densities, relative compaction, the expansive soil report, allowable bearing value, and other soil characteristics, shall be prepared and signed by the soils engineer. The Developer is responsible for paying for these tests. Such report shall be submitted to, and be approved by, the City Engineer before any final approval of the fill is given and before any foundation construction begins.

j. If building is not commenced within one year following the final certification and approval by the City Engineer, a reevaluation as to the adequacy of the intended use and a report shall be filed with the City Engineer for approval. Such report shall contain data on compaction, stabilization, and expansive soils.

7. Fills toeing out on natural slopes. Fills toeing out on natural slopes, which are steeper than three (3) horizontal to one vertical, shall not be permitted.

8. Combined cut and fill slopes. Combined cut and fill slopes shall meet the requirements of subsections (a), (b), (c), and (d) of this section insofar as steepness, height, and benching are concerned except that, where the slope exceeds twenty-five (25') feet in height, the required drainage bench shall be placed at the top of the cut slope. Fill placed on or above the top of an existing or proposed cut or natural slope steeper than three (3) horizontal to one vertical shall be set back from the top of the slope a minimum distance of six (6') feet.

9. Existing fills. All existing man-made fills on any and all sites shall be properly evaluated, and, if deficiencies exist, recommendations and design criteria for corrective measures shall be included within the soils engineering report.

10. Progress reports.

a. Periodic soils reports by a soils engineer certifying the compaction or acceptability of all fills may be required. Such reports shall include, but need not be limited to, the inspection of cleared areas and benches prepared to receive fill and the removal of all soil and unsuitable materials, the bearing capacity of the fill to support structures, the placement and compaction of fill materials, and the inspection of buttress fills, sub-drains, and similar devices. The frequency of such reports shall be at the discretion of the City Engineer and shall be a condition of the land disturbance permit. If the report is not submitted in a timely manner, the City Engineer may temporarily revoke or put on hold the Land Disturbance permit and all work should cease until such time as the report is submitted.

b. The City Engineer may require sufficient inspections by an engineering geologist to ensure that all geologic conditions have been adequately considered. Where geologic conditions warrant, the City Engineer may require periodic geologic reports. Such inspections and reports may be required to include, but need not be limited to, the inspection of cut slopes, canyons during clearing, operations for groundwater and earth material conditions, benches or keys prior to the placement of fill, and possible underground water spring locations.

11. Measure of settlement. On fills of forty (40') feet or more, if recommended by the soils engineer, the City Engineer or the Building Official may require the determination of the settlement characteristics of such fills to establish that any movements have substantially ceased.

12. In such cases, a system of bench marks shall be installed by a civil engineer or land surveyor at critical points on the fill, and accurate measurements of both horizontal and vertical movements shall be taken and evaluated by the soils engineer for a period of time sufficient to define the settlement behavior. The evaluation period shall in all cases include the period from October 15 through March 15.

The Engineer shall design the work covered under subsection 2.4 to meet the following technical specification sections:

1. Section 02291 – Embankment
2. Section 02292 – Dam Embankment Construction

E. **Buttress Fills**

1. General. A buttress fill is a designed compacted earth fill used for providing lateral support to an un-stabilized earth or rock mass. All buttress fills shall be designed in accordance with the recommendations and design criteria, including the sub-drain system, submitted by the soils engineer or engineering geologist with the approval of the City Engineer.

2. Foundation. The ability of the foundation soil to support the buttress shall be investigated, and additional benching shall be required to what is otherwise specified for ordinary fills. The soils engineer shall provide specifications for keying the base of the buttress and for bonding the buttress to the natural ground.

3. Sub-drains. Sub-drains which blanket the entire back face of the buttress or which occur at intervals shall be provided to prevent the buildup of hydrostatic pressure. The details of sub-drains shall be provided by the soils engineer.

4. Safety factor. The buttress fill shall be designed for a minimum safety factor of 1.50 based upon the smaller value of yield or ultimate shear strength of the fill material.

F. **Topsoil** – The Developer shall design the project to retain the topsoil on-site and not export it to an off-site location. Topsoil shall be stripped, processed and stockpiled or live hauled to an adjacent reclaim area in accordance with the requirements of the Contract Documents and Section 3.0 of these standards

G. **Slope Preparation** – Care must be taken to properly prepare the slopes for acceptance of seed erosion control blankets or other approved erosion control material. Clods, rock, tree, brush and other plant material and other obstructions shall be removed from the slope so that direct contact of the soil erosion blanket can be maintained for the entire blanket.

The Engineer shall design the work covered under subsection 2.4 to meet the following technical specification section:

1. Section 02293 – Slope Contouring

H. **Building Lots Requiring Additional Fill** – Lots requiring additional fill dirt in excess of 12-inches shall submit the following information for review, prior to construction. The International Building Code, Appendix 33 and City Ordinances are to be followed in the event a conflict exists than the more restrictive ordinance shall govern.

1. Geotechnical report addressing the following:

   a. Is existing soil able to receive the proposed additional fill?
   b. Is proposed fill material to be used correct for such usage?
   c. Procedure of placing additional fill

      (1) Maximum lift eight inches
      (2) Compaction to be 95% minimum, unless landscaped area and then the top 18" shall be at 90% compaction
      (3) Correct moisture

   d. Surface treatment to prevent erosion
   e. Maximum finish slope to be no greater than two (horizontal) to one (vertical)
   f. Slope setbacks to be as per International Building Code Appendix, Chapter 33, Excavation and Grading section 3314-Setbacks

      (1) Top of Slope: Height of slope divide by five (H/5); minimum of two feet and maximum of ten feet with additional setback for drainage surface waters.

(2) Toe of Slope: Height of slope divided by two (H/2) minimum of two feet and maximum of ten feet.

2. Final report from Geotechnical Engineer.

a. The conditions and procedure in the original geotechnical report was followed. Final report shall be written by author of original Geotechnical report.

2.9 EROSION CONTROL AND DRAINAGE DEVICES

A. **Intervening Terraces** - Paved (reinforced concrete or gunite) intervening terraces shall have a minimum width of six (6') feet and may be installed on the face of all cut and fill slopes at intervals not to exceed twenty-five (25') feet measured along a vertical plane.

The longitudinal slope of intervening terraces shall not be less than two (2%) percent or more than twelve (12%) percent, and any change in the rate of grade within these allowable slopes shall increase the grade in the direction of the flow.

A single run of an intervening terrace shall not exceed two hundred (200') feet to a down-drain. If soil in paved terrace areas is termed "expansive", the paved terraces shall be designed by a registered civil engineer to resist the expansive characteristics of the area.

B. **Diverter Terraces** - Where recommended by a soils engineer, paved (concrete or gunite) diverter terraces, a minimum of thirty (30") inches in width and one (1') foot in depth, shall be installed at the top of all cut slopes where the tributary drainage area above has a slope exceeding ten (10) horizontal to one vertical and a horizontal projection greater than fifty (50') feet. The diverter terrace design shall be shown on each plan for City approval, based on the recommendations of the soils engineer and engineering geologist to the satisfaction of the City Engineer.

C. **Vee Channels** - Where a slough wall is required at the toe of the slope, the City Engineer may require a vee channel to be constructed behind the wall to carry off the slope waters.

D. **Inlet Structures, Down-drains, and Outlet Structures**.

1. Inlet structures. Inlet structures shall be of concrete and galvanized metal. The inlet shall be grated or grilled or of such entry shape as to prevent the entry of objects of greater than four (4") inches dimension and permit objects of a maximum of two (2") inches dimension. Inlet structures shall be placed on the bench and shall be so shaped as to provide small entry losses. An overflow structure into the "vee" down-drains shall be provided.

2. Down-drains. Down-drains shall be of concrete, corrugated galvanized iron hot-dipped in asphalt, or equivalent. Pipe down-drains shall have a diameter of a size required by runoff calculations but not less than twelve (15") inches. Open channel down-drains shall be designed by a civil engineer and shall have a minimum capacity equal to four (4) times the capacity of the required pipe size. The alignment of down-drains shall be such as to maintain a constant velocity head.

3. Cleanouts. Cleanouts shall be provided at all points of severe change in grade and at points of entry to public rights-of-way.

4. Outlet structures. Outlet structures shall be of concrete, galvanized iron hot-dipped in asphalt, or equivalent. Where out-letting into streets, the structure shall be of City standards or a design approved by the City Engineer. Where out-letting into natural watercourses or other approved locations, the structure shall be provided with adequate velocity reducers, diversion walls, riprap, concrete aprons, or any similar energy dissipator. All slope drainage shall be collected and disposed of in the drainage device.

E. **Runoff Computations** - Runoff shall be based upon the proper fifty (50) year isohyetal map, and the runoff calculation shall be based upon the latest methods adopted by the City Engineer.

F. **Drainage Dispersal Walls** - A drainage dispersal device shall be constructed whenever it is necessary to convert channel flow to sheet flow, and the structure shall be of a design approved by the City Engineer.

G. **Sub-drains** – Sub-drains shall be installed to collect any active or potential springs or seeps, which will be covered by the fill. Sub-drains shall be installed after any watercourse has been excavated to firm material in preparation for receiving the fill. Individual design shall be shown on each plan for the City Engineer's approval. Upon the recommendation of the soils engineer and engineering geologist, and upon the approval of the City Engineer, the installation of sub-drains may be eliminated.

H. **Site Drainage** - All building pads with cut or fill shall be constructed to carry surface waters to the nearest practical street, storm drain, or natural watercourse approved by the City Engineer and/or appropriate governmental agency as a safe place to deposit such waters. At least a two (2%) percent grade toward the approval disposal area shall be required for building pads. Where recommended by the soils engineer, eave or ground gutters shall be provided to receive all roof water and deliver it through a non-erosive device to a street or watercourse. Compacted fill berms shall be required to be constructed at the top of all slopes where diverter terraces are not required by the City Engineer.

2.10 SLOPE EROSION PROTECTION

A. **General** – Storm water from construction sites can cause a great deal of damage to a construction project, as well as the existing City maintained storm drain system. To repair these damages, additional funds are required from Developers and other to repair these damages, which costs can be avoided. This section provides the Developer with a few "Best Management Practices" (BMP) accepted nation wide, by the international erosion control industry and the City of South Jordan. The purpose of this section is to indicate BMP's approved by the City and does not attempt to make an exclusive list of approved BMP's. Should the Developer wish to use BMP's not indicated here, the proposed BMP will be submitted to the City for approval, seven days before the preconstruction meeting is held with the City before implementing proposed BMP. It is unacceptable to use an unapproved BMP, and is the basis of a work stop order being placed on the project. The work stop will remain in force until said BMP is approved by the City or removed and replaced with an approved BMP.

B. **Sediment and Erosion Control BMP** – For the convenience of the Developer, engineer and builder, the City has prepared several tables, which indicate the BMP required for various situations and conditions. The situations include construction sites, slopes, soil types and then indicate the sediment control and erosion control BMP's approved by the City. Please refer to the following tables. If there is a conflict between the tables and the written description of the Sediment and Erosion Control BMP, the written description will control. The table is not an inclusive list of all approved BMP and actual site conditions may mandate the use of additional BMP not listed.

The difference between sediment control and erosion control is that sediment control contains the soil that has been eroded from the area of disturbance to the lowest point of the drainage, on or offsite. Due to re-grading, sediment removed for streets and maintenance of the sediment control BMP, sediment control is more expensive to pay for than properly designed and installed erosion control.

Erosion control is based on the principal that the soil stays in the location of final grading. Erosion control BMP's are designed so the soil remains stable and does not become displaced during rainfall or other source of water events.

SEDIMENT AND EROSION CONTROL BEST MANAGEMENT PRACTICES				
Area	***Soil Type***	***Slope***	***Type of Protection***	
			Sediment Control	**Erosion Control**
Construction Site	Clay	>4:1 (25%)	Silt fence, silt barriers, construction entrance, inlet protection, wattles, sediment basins	Construction phasing temporary and permanent seeding/mulch, mulch, riprap, surface roughing

		>3:1 (33.3%)	Silt fence, silt barriers, construction entrance, inlet protection, wattles, sediment basins	Construction phasing temporary and permanent seeding/mulch, riprap, or mulch/tackifier, anchored straw, soil retention blankets, surface roughing
		>2:1 (50%)	Silt fence, silt barriers, construction entrance, inlet protection	Construction phasing with temporary or permanent seeding/mulch (anchored), riprap, or anchored mulch, soil retention blankets, or anchored straw
Construction Site	Sand	>4:1 (25%)	Silt fence, silt barriers, construction entrance, inlet protection, sediment basins	Construction phasing with surface roughing or temporary or permanent seeding/mulch (tackifier), or mulch with tackifier, anchored straw
		>3:1 (33.3%)	Silt fence, silt barriers, construction entrance, inlet protection, sediment basins	Construction phasing with temporary or permanent seeding/anchored mulch, mulch, riprap or anchored mulch, soil retention blankets
		>2:1 (50%)	Silt fence, silt barriers, construction entrance, inlet protection, sediment basins	Construction phasing, temporary and permanent seeding/mulch, mulch, riprap mulch, soil retention blankets, reinforced turf mats

C. **Erosion Control BMP** – The Developer shall design and provide temporary erosion control measures as part of the project. Erosion control measures are to be used for disturbed areas, which will remain, untouched for more than 14 day but less than 21 days. These measures may include mulch and temporary seeding for interior slope stabilization and are discussed more thoroughly in Section 3.0 of these standards.

D. **Erosion Control** – The Developer shall design the project to provide erosion control measures. Erosion control measures are those, which will be constructed to provide for long-term (2-5 year) protection of soils on the project. Erosion control measures are those that prevent the displacement of soil particles. Examples of erosion controls include bonded fiber matrix mulches, tackifiers, erosion control or soil retention blankets. The

majority of these measures are discussed more thoroughly in Section 3.0 of these standards, except for the interceptor, roadway and toe ditches which are discussed below.

E. **Interceptor, Roadway and Toe Ditch** – The Engineer shall design the facility to include interceptor, roadway and/or toe ditches where it is deemed necessary to collect storm water and direct it to a discharge location. These ditches shall receive an increased amount of armoring in the way of soil erosion blankets, turf reinforced mats, energy dissipaters and riprap as determined by hydraulic design 'The Tractive Force Theory' as indicated in the Federal Highway Administration Hydraulic Engineering Circular No. 15 Design of Roadside Channels with Flexible linings is the method acceptable to the City. The design will be the determining factor of channel material used.

The Engineer shall design the work covered under subsection 2.5 to meet the following technical specification section:

1. Section 02273 – Interceptor, Roadway and Toe Ditch

F. **Brush-layering See Appendix A - 5200**

1. Purpose: This technique is used to stabilize slopes, particularly road fill slopes where construction has or will result in unstable soil conditions. A modified brush-layering technique often referred to as 'trench-packing' or 'branch-packing' can be installed with hard labor to repair existing rills and gullies or steep fill slopes. Both 'brush-layering' and 'branch packing' place live branches horizontally in successive layers up the face of the slope. The brush-layer branches, especially after rooting, reinforce slopes by serving as tensile inclusions, which provide frictional resistance to sliding or other types of displacement. The protruding brush retards runoff and reduces surface erosion.

2. Conditions Where Practice Applies: Brush-layering is best used concurrently with construction of fill slopes or embankments. Cuttings are placed by hand while heavy equipment is used to fill and compact each successive lift of soil fill. Brush-layering is similar in principle to other reinforced earth practices except that the reinforcing material is live branches. This practice is also a good remedial action intended to repair gullies or existing slopes, but may have limited applications in arid areas unless irrigated. Brush-layering performs several functions for erosion control, earth reinforcement and slope stability:

    a. Breaking up the slope length into a series of shorter slopes separated by rows of brush-layer.
    b. Reinforcing the soil with the unrooted branch stems.
    c. Reinforcing the soil as roots develop, adding significant resistance to sliding or shear displacement.
    d. Providing slope stability and allowing vegetative cover to become established.
    e. Trapping debris on the slope.
    f. Aiding infiltration on dry sites.
    g. Drying excessively wet sites.
    h. Adjusting the site's microclimate, thus aiding seed germination and natural regeneration.

i. Redirecting and mitigating adverse slope seepage by acting as horizontal drains.

3. Planning Consideration:

a. Plant material harvest and installation should be performed during its dormant season, late fall to early spring.

b. Use site reconnaissance to identify willow species, growth form, and soil and site conditions on adjacent sites and compare their conditions to the construction site. Planting will be more successful as the soil, site conditions and species selected match stable and vegetated nearby sites.

c. The ideal plant materials for wattling are those that: 1) root easily; 2) are long, straight and flexible; and 3) are in plentiful supply near the job site. Willow (Salix spp.) makes ideal wattling material. Some species of Baccharis, Cornus, and Populus also have very good rooting ability.

d. Choose plant material adapted to the site conditions and confirm the availability of plant material that will be used on site before construction begins.

e. When choosing live willow material for bioengineering applications, remember that young (less than 1 year old) wood or suckers will often sprout easier under optimum conditions but healthy, older wood (1 to 4 years old) has greater vegetative (energy) reserves necessary to consistently sprout and the older wood is much stronger. If possible, mix younger wood with older wood for the bioengineering application such that a majority of the material is 1 to 4 years old.

f. Research indicates that all cuttings should be soaked for a minimum of 24 hours, whether they are stored or harvested and immediately installed (Hoag 1991; Hoag et al. 1991; Hoag et al. 1992). Some research recommends soaking the cuttings for as much as 10 to 14 days

g. Willows have several different growth forms, from shrubs to large trees. Small to medium sized shrub-type and rhizomatous or creeping-type willows are used for planting channel banks. Upland willow species are found in relatively dry areas and should be used on similar sites. Tree-type willows are selected for the upper bank and flood plain area.

h. If branch cuttings are not pre-soaked then they shall be harvested no earlier than 48 hours prior to installation. Cuttings must be kept moist and cool at all times between cutting and installation therefore, all cuttings need to be thoroughly wet and covered with moistened wrapping before being transported.

i. Construction personnel shall be made aware that brush-layering uses live plant material and must be treated as such.

j. Spacing between the brush-layers is determined by the erosion potential of the slope (i.e., soil type, rainfall, and length and steepness of the slope). Spacing may be from 3-8 feet (1-2.5 m). On long slopes, brush-layer spacing should be closer at the bottom and spacing may increase near the top of the slope. Steep slopes (2:1) should not exceed, approximately, 30 feet in slope length. Reinforced earth design guidelines suggest that the slope height should not exceed 3 times the width of the reinforced volume. Therefore, for brush-layering with 6-8 foot long cuttings, the slope height should not exceed 8-24 feet.

G. **Cellular Confinement System for Slope Stabilization (See Appendix A – 5205)**

1. Purpose: Cellular Confinement System (CCS) is a permanent erosion control practice intended to stabilize steep slopes. The expandable panels create a cellular system that confines topsoil infill, protect and reinforce the plant's root zone, and permits natural subsurface drainage. The honeycomb shaped cells encapsulate and prevent erosion of the infill material. The cellular confinement systems are used for:

   a. Revetments - filling the cells with rock, gravel, or topsoil can provide an alternative to hard armor revetment systems.
   b. Erosion control on steep slopes - cells can be in-filled with soil and vegetated or in-filled with granular materials for sterile arid regions. Slopes as steep as 1:1 can be treated with cellular confinement systems.
   c. Flexible channel lining systems, either vegetated or rock filled.
   d. Framework for earth retaining structures.
   e. Road stabilization - cells confine and reinforce select fill materials, thereby increasing load-bearing capacities.
   f. Temporary low-water stream crossings.

H. **Erosion Blankets and Turf Reinforcement Mats Slope Installation (See Appendix A – 5210)**

1. Purpose: Erosion control blankets are used to temporarily stabilize and protect disturbed soil from raindrop impact and surface erosion, to increase infiltration, decrease compaction and soil crusting, and to conserve soil moisture. Mulching with erosion control blankets will increase the germination rates for grasses and forbs and promote vegetation establishment. Erosion control blankets also protect seeds from predators, reduce desiccation and evaporation by insulating the soil and seed environment.

   Some types of erosion control blankets and turf reinforcement mats are specifically designed to stabilize channelized flow areas. These blankets and mats can aide the establishment of vegetation in waterways and increase the maximum permissible velocity of the given channel by reinforcing the soil and vegetation to resist the forces of erosion during runoff events. Stems, roots and rhizomes of the vegetation become intertwined with the mat, reinforcing the vegetation and anchoring the mat.

2. Conditions Where Practice Applies: Establishing vegetation in channels or on slopes may require additional measures beyond seeding and straw mulching. Conditions where erosion control blankets and mats are appropriate may include:

   a. Slopes and disturbed soils where mulch must be anchored and other methods such as, crimping or tackifying are neither feasible nor adequate.
   b. Steep slopes, generally steeper than 3:1.
   c. Slopes where erosion hazard is high.
   d. Critical slopes adjacent to sensitive areas such as streams and wetlands.
   e. Disturbed soil areas where planting is likely to be slow in providing adequate protective cover.

f. Channels with flow exceeding 2-4 ft./sec.

g. In channels intended to be vegetated and where the design flow exceeds the permissible velocity. Allowable velocity, with turf reinforcement mats after vegetative establishment, is up to 10 ft/sec.

3. Specifications: Erosion control blankets are generally a machine produced mat of organic, biodegradable mulch such as straw, curled wood fiber (excelsior), coconut fiber or a combination thereof, evenly distributed on or between photodegradable polypropylene or biodegradable natural fiber netting. Synthetic erosion control blankets are a machineproduced mat of ultraviolet stabilized synthetic fibers and filaments. The nettings and mulch material are stitched to ensure integrity and the blankets are provided in rolls for ease of handling and installation.

   Soil stabilization and turf reinforcement mats are high strength, flexible, machine produced, three-dimensional matrix of nylon, polyethylene, polypropylene or polyvinyl chloride that have ultra violet (UV) stabilizers added to the compounds to ensure endurance and provide 'permanent vegetation stabilization'.

4. Planning Considerations: Erosion control blankets and turf reinforcement matting can be applied to problem areas to supplement nature's erosion control system (vegetation) in its initial establishment and in providing a safe and 'natural' conveyance for high velocity storm water runoff. These products are being used today in many applications where previously a structural lining or armoring would have been required. Care must be taken to choose the type of blanket or matting which is more appropriate for the specific needs of a project. There are many soil stabilization products available today and it is very difficult to cover all the advantages, disadvantages and specifications of all the manufactured blankets and mats. therefore, as with many erosion control type products, there is no substitute for a thorough understanding of manufacture's instructions and recommendations and a site visit by a designer or plan reviewer to verify a product's appropriateness.

I. Live Staking (See Appendix A – 5220)

1. Purpose: Using a system of live stakes creates a root mat that stabilizes the soil by reinforcing and binding soil particles together and by extracting excess soil moisture. The practice is commonly used in conjunction with other practices to provide for a more stable site conditions (i.e., used to anchor blankets, coir mats, turf reinforcement mats, straw rolls, etc.).

2. Planning Consideration:

   a. Live stake harvest and installation should be performed during its dormant season, late fall to early spring.

   b. Use site reconnaissance to identify willow species, growth form, and soil and site conditions on adjacent sites and compare their conditions to the construction site. Planting will be more successful as soil, site and species selected match stable, vegetated nearby sites. Live staking may have limited applications and success in arid environments unless irrigated.

c. If native willows or cottonwood are not found in the vicinity, live staking may not be a good option.
d. Choose plant material adapted to the site conditions and confirm the availability of plant material that will be used on site before construction begins.
e. Planting willows, in some cases, can adversely interact with other natural forces; such as water hydraulics.

Willows have several different growth forms, from shrubs to large trees. Small to medium sized shrub-type and rhizomatous or creeping-type willows are used for planting channel banks. Upland willow species are found in relatively dry areas and should be used on similar sites. Tree-type willows are selected for the upper bank and flood plain area.

J. **Water-bars and Rolling Dips (See Appendix A – 5230)**

1. Purpose: To limit the accumulation of erosive volumes of water on roads by diverting surface runoff at pre-designed intervals.

2. Planning Considerations: Construction of access roads, power lines, pipelines, and other similar installations often requires clearing long narrow right-of-ways over sloping terrain. Roads concentrate runoff. Gully formation may be especially severe in tire tracks and ruts. To prevent gully erosion, runoff can often be diverted across the width of the right-of-way to undisturbed areas by using waterbars or rolling dips.

3. A waterbar is a berm and excavation built diagonally across the road. Water-bars generally become less effective if driven over during wet weather, and are difficult to cross with low clearance vehicles. Rolling dips are gently sloping excavations running diagonally across the road surface, and are more appropriate for winter use. Rolling dips are more difficult to construct, but are much easier to traverse and require less maintenance.

4. Frequent rolling dips are often preferable, both economically and hydrologically, to improperly spaced cross road drains such as culverts.

5. Give special consideration to each individual outlet area, as well as to the cumulative effect of added diversions. Never outlet water-bars or rolling dips onto unprotected fill slopes. Use gravel to stabilize the diversion where significant vehicular traffic is anticipated.

6. Design Criteria: (See Appendix A – 5230)

   a. Water-bars Height: 18-inch minimum measured from the channel bottom to the ridge top.
   b. Side Slope: 2:1 or flatter; 3:1 or flatter where vehicles cross.
   c. Base width of ridge: 6-foot minimum.
   d. Spacing of water-bars/rolling dips is shown in the Table below.

Table 1.

Slope (%)	Spacing (ft)	Spacing High Erodable (ft)
<5	125	100
5 to 10	100	75
10 to 20	75	50
20 to 25	50	25
>35	25	25

e. An additional check for appropriate spacing is the distance it takes for the un-rocked, unprotected running surface of a nearby road to develop a 1-inch rill is a rough measure of the appropriate spacing distance.

f. Grade and angle: Positive grade not to exceed 2%. A crossing angle of approximately 60 degrees is preferred.

g. Outlet: Diversions should have stable outlets, either natural or constructed. Site spacing may need to be adjusted for field conditions to use the most suitable areas for water disposal - into brush, onto a ridgeline, or onto an energy dissipator.

K. **Slope Drain (See Appendix A – 5235)**

1. Purpose: To convey concentrated runoff down the face of a cut or fill slope without causing erosion.

2. Conditions Where Practice Applies: This practice applies to construction areas where storm water runoff above a cut or fill slope will cause erosion if allowed to flow over the slope. Temporary slope drains are generally used in conjunction with diversions to convey runoff down a slope until permanent water disposal measures can be installed.

3. Planning Considerations: Constructed slopes are often exposed to erosion between the time they are graded and permanently stabilized. During this period, the slope is very vulnerable to erosion, and temporary slope drains together with temporary diversions can provide valuable protection.

   It is very important that these temporary structures be sized, installed, and maintained properly, because their failure will usually result in severe erosion of the slope. The entrance section to the drain should be well entrenched and stable so that surface water can enter freely. The drain should extend downslope beyond the toe of the slope to a stable area or appropriately stabilized outlet. Appropriate TRM or rock lining should be installed to ensure stable drains.

Other points of concern are failure from overtopping from inadequate pipe inlet capacity and lack of maintenance of diversion channel capacity and ridge height.

4. Design Criteria:

a. Capacity: Peak runoff from the 10-year storm. See reference material for determining the peak runoff.

b. Pipe size: Unless they are individually designed, size drains according to the Table below:

Maximum Drainage Area per pipe	Pipe Diameter inches
0.50 ac.	12
0.75 ac.	15
1.00 ac.	18
>1.00 ac.*	As designed

*Inlet design becomes more complex beyond this size

c. Conduit: Construct the slope drain from heavy-duty, flexible materials such as non-perforated, corrugated plastic pipe, or open top over-side drains with tapered inlets. Install reinforced, hold-down grommets or stakes to anchor the conduit at intervals not to exceed 10 feet (3 m) with the outlet end securely fastened in place. Corrugated plastic pipe must have one (1) anchor assembly for every 20 feet of slope drain. The conduit must extend beyond the toe of the slope.

d. Entrance: Construct the entrance to the slope drain of a standard flared-inlet section of pipe with a minimum 6-inch. Make all fittings watertight. A standard T-section fitting may also be used at the inlet. An open top flared inlet for over-side drain may also be used.

e. Temporary Diversion: Generally, use an earthen diversion with a dike ridge or berm to direct surface runoff into the temporary slope drain. Make the height of the ridge over the drain conduit a minimum of 1.5 feet and at least 6 inches higher than the adjoining ridge on either side. The lowest point of the diversion ridge should be a minimum of 1-foot above the top of the drain so that design flow can freely enter the pipe.

f. Outlet Protection: Protect the outlet of the slope drain from erosion with an energy dissipator.

L. Biolog/Straw Rolls (See Appendix A – 5250 Biolog Rolls)

1. Definition: Straw rolls are manufactured from straw that is wrapped in tubular black plastic netting. They are approximately 9-inches in diameter by 25-30-feet long. Rolls are placed and staked along the contour of newly constructed or disturbed slopes.

2. Purpose: Straw rolls are intended to capture and keep sediment on the slopes. Straw rolls are useful to temporarily stabilize slopes by reducing soil creep and sheet and rill erosion until permanent vegetation can get established. Installed, straw rolls shorten the slope length, thereby interrupting the raveling and rilling processes, and reduce the slope steepness. They catch soil material that moves down the slope by the freeze/thaw processes. Organic matter and native seeds are trapped behind the rolls, which provide a stable medium for germination. Rolls trap fertile topsoil and retain moisture from rainfall, which aids in growth of tree seedlings planted along the upslope side of the rolls.

3. Design Considerations: Sites appropriate for straw rolls are:

   a. Slopes susceptible to sheet and rill erosion;
   b. Slopes producing dry ravel;
   c. Slopes susceptible to freeze/thaw activity; or slopes difficult to vegetate because of soil movement. Straw rolls are not intended for use in concentrated flow situations.
   d. Spacing of biolog/straw rolls – spacing is to be calculated using the soil loss tolerance factor of "1".

   It is imperative, especially on steeper slopes, that a sufficient trench is constructed to place the roll in. Without it, the roll will not function properly, runoff will scour underneath it, and trees or shrubs planted behind the roll will not have a stable environment in which to become established.

Straw rolls will last an average of one to two years. This is an important factor when planning the optimum length of time the slope will need mechanical stabilization. Straw rolls can be staked with willow stakes if site conditions warrant and the moisture retained by the straw roll will encourage willow establishment.

a. Advantages:

   (1) Straw rolls are a relatively low-cost solution to sheet and rill erosion problems.
   (2) They can replace silt fences or straw bales on steep slopes.
   (3) Rolls are a short-term solution to help establish native vegetation.
   (4) Rolls store moisture for vegetation planted immediately upslope.
   (5) Plastic netting will eventually photo degrade, eliminating the need for retrieval of materials after the straw has broken down.
   (6) Straw becomes incorporated into the soil with time, adding organic material to the soil and retaining moisture for vegetation.
   (7) Depending on slope steepness, straw rolls are installed at 25-50-foot intervals on the slope.

b. Disadvantages:

   (1) Rolls only function for one or two seasons.
   (2) Pilot holes through the rolls must be pre-driven with a metal rod.
   (3) If not installed properly with a sufficient trench, rolls may fail during the first rain event.

Straw rolls may require maintenance to ensure that the stakes are holding and the rolls are still in contact with the soil. This is especially true on steep slopes in sandy soil.

M. **Surface Roughening (See Appendix A – 5255)**

1. Definition: Roughening is a technique for roughening a bare soil surface with furrows running across the slope, stair stepping (5215), or tracking with construction equipment.

2. Purpose: Surface Roughening is intended to aid the establishment of vegetative cover from seed, to reduce runoff velocity and increase infiltration, and to reduce erosion and provide for sediment trapping.

3. Conditions Where Practice Applies: All construction slopes require surface roughening to facilitate long-term stabilization with vegetation, particularly slopes steeper than 3:1.

4. Planning Considerations: Rough slope surfaces are preferred because they aid the establishment of vegetation, improve water infiltration, and decrease runoff velocity. Graded areas with smooth, hard surfaces may be initially attractive, but such surfaces increase the potential for erosion. A rough, loose soil surface gives a mulching effect that provides more favorable moisture conditions than hard, smooth surfaces; this aids seed germination.

There are different methods for achieving a roughened soil surface on a slope, and the selection of an appropriate method depends upon the type of slope. Roughening methods include grooved or serrated slope grading, furrowing, and tracking. Factors to be considered in choosing a method are slope steepness, mowing requirements, and whether the slope is formed by cutting or filling

N. Wattles (See Appendix A – 5260)

1. Purpose: Wattling functions to reduce erosion and stabilize slopes in several ways:

   a. The wattle bundles, binding rope and stakes are all structural components, which combine to stabilize the surface layers of the slopes by resisting hydraulic and gravitational forces.
   b. Wattling prevents rills and gullies by reducing the effective slope length and thereby dissipating the energy of water moving downslope. Wattles immediately reduce surface erosion.
   c. The terraces formed by a series of wattles trap sediment and detritus. Infiltration is increased as runoff is slowed and on dry sites this increases the available water for plant establishment.
   d. Vegetation establishment is enhanced because wattling provides a suitable microsite for plants by reducing surface erosion, increasing infiltration rates and by forming a series of terraces with shallower slope angles.

2. Conditions Where Practice Applies: Wattling may be used for road fills, road cuts, gullies or slumped areas, eroded slopes or eroding stream banks.

a. Repair of small earth slips and slumps or to protect slopes from shallow slides 1-2 feet deep.
b. Wattling may be used to stabilize entire cut or fill slopes or localized gully areas of slopes.
c. Wattling may be installed during construction (dormant season) or as a remedial action on existing slopes.
d. Wattling is useful on slopes requiring other planting materials such as, woody vegetation, transplants, grasses, and forbs. Wattling also enhances conditions for natural invasion and the establishment of other plants from the surrounding plant community.

3. Planning Consideration:

a. Plant material harvest and installation should be performed during its dormant season, late fall to early spring.
b. Use site reconnaissance to identify willow species, growth form, and soil and site conditions on adjacent sites and compare their conditions to the construction site. Planting will be more successful as the soil, site conditions, and species selected match stable and vegetated nearby sites.
c. The ideal plant materials for wattling are those that: 1) root easily; 2) are long, straight and flexible; and 3) are in plentiful supply near the job site. Willow (Salix spp.) makes ideal wattling material. Some species of Baccharis, Cornus, and Populus also have very good rooting ability.
d. Choose plant material adapted to the site conditions and confirm the availability of plant material that will be used on site before construction begins. Wattling may have limited applications and success in arid environments unless irrigated.
e. When choosing live willow material for bioengineering applications, remember that young (less than 1 year old) wood or suckers will often sprout easier under optimum conditions but healthy, older wood (1 to 4 years old) has greater vegetative (energy) reserves necessary to consistently sprout and the older wood is much stronger. If possible, mix younger wood with older wood for the bioengineering application such that a majority of the material is 1 to 4 years old.
f. Research indicates that all cuttings should be soaked for a minimum of 24 hours, whether they are stored or harvested and immediately installed (Hoag 1991; Hoag et al. 1991; Hoag et al. 1992). Some research recommends soaking the cuttings for as much as 10 to 14 days.
g. Planting willows, in some cases, can adversely interact with other natural forces; such as water hydraulics to cause increased drainage to willows can partially block or deflect currents adversely. Willows have several different growth forms, from shrubs to large trees. Small to medium sized shrub-type and rhizomatous or creeping-type willows are used for planting channel banks. Upland willow species are found in relatively dry areas and should be used on similar sites. Tree-type willows are selected for the upper bank and flood plain area.

O. **Retaining Walls** – The Developer shall design and include retaining walls where necessary. These measures are discussed more thoroughly in Section 3.7 of these standards.

P. **Temporary Landscape Irrigation System** – In cases where soil erosion control measures are selected by the Developer to meet his project needs, a landscape irrigation system will need to be designed and constructed. The design of such systems shall be done by a licensed Landscape Architect, registered in the State of Utah and shall be reviewed and approved by the City prior to construction. These measures are discussed more thoroughly in Section 3.8 of these standards.

2.11 CHANNEL EROSION PROTECTION

A. **General** – Protection of channels used in storm water transmission is an important feature in the transmission of storm water flows from their place or origin to either a sedimentation basin, storm water detention basin, or other storm water facility. Since the storm water flows are concentrated in these channels, special care must be taken to ensure that sufficient protection is provided within the channel cross-section to eliminate excessive erosion. The following information is to be considered when designing facilities associated with storm water channels.

B. **Energy Dissipators (See Appendix A – 5000)** – The need for energy dissipaters for reduce water velocities/scour shall be identified through the preparation of a scour and sediment transport study to be prepared for projects which discharge their storm waters into an existing and/or natural runoff channel or stream.

The Developer's engineer is to submit design calculations for each energy dissipater in the scour and sediment transport study.

Energy dissipaters designed with the design procedure as shown in HEC 14 Material and include the following:

1. The sedimentation basin stabilized with vegetation and mulch protections as required by these standards.

2. All material used within the energy dissipater shall be capable of allowing vegetative growth in, around or through the structure.

3. Temporary irrigation system if vegetation is planted outside the native planting window.

C. **Grass-Lined Channel (See Appendix A – 5010 and 5015)**

1. Purpose: Lined protection of drainage ways reduces erosion by lowering water velocity over the soil surface and by binding soil particles with roots. The drainage way is any ground surface over which concentrated runoff travels. It is typically a manmade waterway, swale or ditch. It may also be the upslope flow of water and directs the concentrated flow along the surface of the barrier. Lined channels should be used where:

   a. A vegetative lining can provide sufficient stability for the channel grade by increasing maximum permissible velocity;
   b. Slopes are generally less than five (5%) percent;

c. Site conditions required to establish vegetation i.e., climate, soils and topography are present.

2. Design Considerations:

a. Grass-lined channels resemble natural systems and are usually preferred where design velocities are suitable. Select appropriate vegetation and construct channels early in the construction schedule before grading and paving increase runoff rates.

b. Generally, grass-lined channels are constructed in stable, low areas to conform to the natural drainage system, but they may also be needed along roadways or property boundary. To reduce erosion potential, design the channel to avoid sharp bends and steep grades. Meandering channels are preferred as they replicate natural systems and assist in slowing velocities.

The channel cross section should be wide and shallow with relatively flat side slopes so surface water can enter over the vegetated banks without erosion. Riprap may be needed to protect the channel banks at intersections where flow velocities approach allowable limits and turbulence may occur. Cross-section designs include:

a. Vee-shaped channels are generally used where the quantity of water is relatively small, such as roadside ditches. The V-shaped cross section is desirable because of difficulty stabilizing the bottom, where velocities may be high. A grass or sod lining will suffice where velocities are low or rock or riprap lining may be necessary in higher velocities.

b. Parabolic grass channels are preferred and often used where larger flows are expected and sufficient space is available. The shape is pleasing and may best fit site conditions. Riprap should be used where higher velocities are expected and where some dissipation of energy (velocity) is desired. Combinations of grass with riprap centers or turf reinforcement mat centers are useful where there is a continuous low flow in the channel.

c. Trapezoidal grass channels are used where runoff volumes are large and slope is low so that velocities are non-erosive to vegetated linings. Trapezoidal channels generally have concrete or riprap lined center for low flow.

(1) Grass-lined channels must not be subject to sedimentation from disturbed areas.

(2) An established grass-lined channel resembles natural drainage systems and is usually preferred if design velocities are below 5 ft/sec.

(3) Outlets should function with a minimum of erosion. See Appendix A – 5000 Energy Dissipator BMP.

(4) Channels with design velocities greater than 2 ft/sec. will require that turf reinforcement mats, erosion control blankets, fiberglass roving or straw and netting be installed at the time of seeding to provide stability until the vegetation is fully established. It may also be necessary to divert water from the channel until vegetation is established or to line the channel with sod.

(5) Whenever design velocities exceed 4 ft/sec. a permanent turf reinforcement mat or rock lining will be necessary.

(6) Sediment traps may be needed at channel inlets and outlets to prevent sedimentation.

3. Additional Design Criteria:

a. Capacity: Sufficient to convey 100 year – 24 hour storm.

b. Velocity: The allowable design velocity for grass-lined channels is based on soil conditions, type of vegetation, and method of establishment. If design velocity of a channel to be vegetated exceeds 2-4 ft./sec. a channel liner is required.

c. Depth: The design water surface elevation or a channel receiving water from diversions or other tributary channels shall be equal to or less than the design water surface elevation of the diversion or other tributary channel at the point of intersection. The top width of parabolic and vee-shaped, grass-lined channels shall not exceed 30 feet, and the bottom width of trapezoidal, grass-lined channels shall not exceed 15 feet unless multiple or divided waterways, riprap center, or other means are provided to control meandering of low flows.

d. Cross-section: The channel shape may be parabolic, trapezoidal, or V-shaped, depending on need and site conditions.

e. Side slopes: Grassed channel side slopes generally are constructed 3:1 or flatter to aid in the establishment of vegetation and for maintenance.

f. Grade: Generally restricted to slopes 5% or less. Either a uniform or gradually increasing grade is preferred to avoid sedimentation.

D. **Log Check Dam (See Appendix A – 5020)** – In order to reduce erosion in gullies and other drainage ways, log check dams may be required to be installed as indicated in drawing no. 5020. Logs are to be 4 to 6-inches in diameter which are to be placed vertically into the drainage way soils, adjacent to one another. The purpose of the dams is to slow the flow down the drainage, reduce the centerline slope, thereby reducing the velocity of the water and eventually create a more stable environment and reduce erosion.

E. **Riprap (See Appendix A – 5030)** – The Developer shall provide designed riprap where necessary to protect against soil erosion. Riprap is a layer(s) of stone or rock designed to protect and stabilize the surface of the soil from erosion from water or wind. Riprap may be use to stabilize cut and fill slopes, channel slopes and bottoms, inlets and outlets for culverts, bridges, slopes drains and shorelines to due wave action. These measures are discussed more thoroughly in Section 3.0 of these standards. The design of the riprap for channels or similar structures will be performed in accordance HEC 14, Design of Roadside Channels with flexible linings.

1. Purpose: To protect the soil surface from erosive forces and/or improve stability of soil slopes that are subject to seepage or have poor soil structure.

2. Conditions Where Practice Applies: Riprap is used for the following applications:

a. Cut-and-fill slopes subject to seepage or weathering, particularly where conditions prohibit establishment of vegetation,

b. Channel side slopes and bottoms,
c. Inlets and outlets for culverts, bridges, slope drains, grade stabilization structures, and storm drains,
d. Stream bank and stream grades,
e. Shorelines subject to wave action.

3. Planning Considerations: Riprap is a versatile, highly erosion-resistant material that can be used effectively in many locations and in a variety of ways to control erosion on construction sites.

Graded Versus Uniform Riprap: Riprap is classed as either graded or uniform. Graded riprap includes a wide mixture of stone sizes. Uniform riprap consists of stones nearly all the same size.

Graded riprap is preferred to uniform riprap in most applications because it forms a dense, flexible cover. Uniform riprap is more open and cannot adjust as effectively to movement of the stones. Graded riprap is also cheaper to install requiring less handwork for installation than uniform riprap, which must be placed in a uniform pattern. Uniform riprap may give a more pleasing appearance.

Riprap sizes are designated by either the mean diameter or the weight of the stones. The diameter specification is often misleading since the stones are usually angular. However, common practice is to specify stone size by the diameter of an equivalent size of spherical stone. Table 1 lists some typical stones by weight, spherical diameter, and the corresponding rectangular dimensions. These stone sizes are based upon an assumed specific weight of 165 lbs/ft^3 (2600 kg/m^3).

Table 1

Weight (lbs.)	Spherical Dia. (ft.)	Length (ft.)	Width/Height (ft.)
50	0.6	1.4	0.5
100	1.1	1.8	0.5
150	1.3	2.0	0.7
300	1.6	2.6	0.9
500	1.9	3.0	1.0
1000	2.2	3.7	1.3
2000	2.8	5.4	1.8
4000	3.6	6.0	2.0

A method commonly used for specifying the range of stone sizes in graded riprap is to designate a diameter for which some percentage, by weight, will be smaller. For example "d_{85}" specifies a mixture of stones in which 85% of the stone by weight would be smaller than the diameter specified. Most designs are based on "d_{50}", size stones.

When considering riprap for surface stabilization, it is important to anticipate visual impacts, including weed control, hazards from snakes and other animals, danger of slides and hazards to areas below steep riprap slopes, damage and possible slides from children moving stones, and general safety.

Proper slope selection and surface preparation are essential for successful long term functioning of riprap. Adequate compaction of fill areas and proper use of filter blankets or aggregate foundation is necessary.

Sequence of Construction: Schedule disturbance of areas that require riprap protection so the placement of riprap can follow immediately after grading. When riprap is used for outlet protection, place the riprap before, or in conjunction with the installation of the structure so that it is in place before the first runoff event.

4. Design Criteria:

a. Gradation: Riprap should be a well-graded mixture with fifty (50%) percent by weight larger than the specified design size. The diameter of the largest stone size in such a mixture should be 1.5 times the d_{50} size with smaller sizes grading down to 1-inch.

b. Size: The designer should determine the riprap size that will be stable for site conditions. Having determined the design stone size, the designer should then select the size or sizes that equal or exceed riprap gradation commercially available in the area. For more design criteria see references; Association of Bay Area Governments, Manual of Standards for Erosion and Sediment Control Measures; HEC 11 – Use of Riprap for Bank Protection.

c. Thickness: Construction techniques, dimensions of the area to be protected, size and gradation of the riprap, the frequency and duration of flow, difficulty and cost of maintenance, and consequence of failure should be considered when determining the thickness of riprap linings. The minimum thickness should be 1.5 times the maximum stone diameter, but in no case less than 6 inches.

d. Quality of stone: Stone for riprap may consist of fieldstone or quarry stone. The stone should be hard, angular, of such quality that it will not break down on exposure to water or weathering, and suitable in all other respects for the purpose intended. The specific gravity of the individual stones should be at least 2.5.

e. Size of Stone: The sizes of stone used for riprap protection are determined by purpose and specific site conditions.

f. Slope Stabilization: Riprap stone for slope stabilization not subject to flowing water or wave action should be sized for stability for the proposed grade. The gradient of the slope to be stabilized should be less than the natural angle of repose of the stone selected. Riprap used for surface stabilization of slopes does not add significant resistance to sliding or slope failure and should not be considered a retaining wall. The inherent stability of the soil must be satisfactory before riprap is used for surface stabilization. Slopes approaching 1.5:1 may require special stability analysis.

g. Outlet protection: Design criteria for sizing stone and determining the dimensions of riprap pads at channel or conduit outlets are presented in: USDA, SCS Field Design Manual; Manual of Standards for Erosion and Sediment Control Measures-Association of Bay Area Governments and other engineering design manuals.

h. Filter Blanket: A filter blanket is a layer of material placed between the riprap and the underlying soil to prevent soil movement into or through the riprap.

A suitable filter may consist of a well-graded gravel or sand-gravel layer or a synthetic filter fabric manufactured for this purpose. The design of a gravel filter blanket is based on the ratio of particle size in the overlying filter material to that of the base material in accordance with the criteria below. The designed gravel filter blanket may consist of several layers of increasingly large particles from sand to erosion control stone.

A gravel filter blanket should have the following relationship for a stable design:

$$\frac{d_{15}\,filter}{d_{85}\,base} < 5$$

$$5 < \frac{d_{15}\,filter}{d_{15}\,base} < 40$$

$$\frac{d_{50}\,filter}{d_{50}\,base} < 40$$

In these relationships, filter refers to the overlying material and base refers to the underlying material. These relationships must hold between the filter material and the base material (soil foundation) and between the riprap and the filter. More than one layer of filter material may be needed. Each layer of filter material should be at least 6 inches thick.

A synthetic filter fabric may be used with or in place of gravel filters. The following particle size relationships should exist:

(1) Filter fabric covering a base with granular particles containing fifty (50%) percent or less (by weight) of fine particles (less than U.S. Standard Sieve No. 200:

$$\frac{d_{85}\,base\ (mm)}{EOS * filterfabric} > 1$$

• total open area of filter should not exceed 36%

(2) Filter fabric covering other soils:

- EOS is no larger than U.S. standard sieve no. 70
- total open area of filter should not exceed 10%

*EOS - Equivalent Opening Size compared to a U.S. standard sieve size.

No filter fabric should have less than 4% open area or an EOS less than U.S. Standard Sieve No. 100. The permeability of the fabric must be greater than that of the soil. The fabric may be made of woven or non-woven monofilament yarns and should meet the following minimum requirements:

(1) Thickness 20-60 mils,
(2) Grab strength 90-120 lbs,
(3) Conform to ASTM D-1682 or ASTM D-177.

Filter blankets should always be provided where seepage is significant or where flow velocity and duration of flow or turbulence may cause the underlying soil particles to move through the riprap.

F. **Rock-Lined Channel (See Appendix A – 5040)**

1. Purpose: To convey concentrated surface runoff without erosion.

2. Conditions Where Practice Applies: This practice applies where design flow exceeds 2 ft./sec such that channel lining is required, but conditions are not suitable for vegetative protection. Specific conditions include:

   a. All roadside ditches or drainage channels greater than two (2%) percent and located in highly erodable soils that have a low maximum permissible velocity.
   b. The channel design velocity exceeds that allowable for a grass-lined channel.
   c. The channel will continue to down-cut without protection because it is adjusting to increased flow or a new base line (outlet elevation).

3. Design Criteria:

   a. Capacity: peak runoff from 100-year storm.
   b. Side slopes: 2:1 or flatter.
   c. Stone size: d= 2 inch minimum. Use engineering design procedures for sizing riprap for large or critical drainage channels. See reference material, Association of Bay Area Governments, North Carolina Erosion and Sediment Control Planning and Design Manual, or for the design of stable channels.
   d. Riprap thickness: T= 1.5 times the stone diameter or as shown on the plans; 6 inch thick minimum.
   e. Foundation: Extra-strength filter fabric or an aggregate filter layer, if required.
   f. Use a foundation for decomposed granite sands or other highly erodable soils.
   g. Channel cross section should conform as shown on plans for design high flow.
   h. Outlet must be stable.

G. **Straw Bale Sediment Barrier Check Dam (See Appendix A – 5055)**

1. Purpose: Straw bale sediment barriers are intended to intercept and detain small amounts of sediment. These barriers are suited for small channel flow situations; however, they may require significant maintenance to ensure their function. Areas where straw bale barriers could apply include:

a. The drainage area is 1 acre or less;
b. The maximum slope gradient for the swale above the barrier is 2:1;
c. The maximum slope length above the barrier is 100 ft.;
d. The flow is less than 2 ft 3/sec. flow.

2. Design Considerations: The straw bales are either wire-bound or nylon string tied. Wire-bound bales may deteriorate rapidly if the wire is placed in contact with the soil. Straw bales have a useful life of less than 6 months; however the life is extended when used with filter fabric. If used, the filter fabric should cover the bales, be enveloped in the rock at the spillway in order to better filter out fine soil particles, and extend beyond the spillway to act as an energy dissipater.

Design considerations should include the following:

a. Drainage area;
b. Runoff velocities;
c. Secure installation;
d. Compatibility with existing topography;
e. Spillways or energy dissipators;
f. Use of extraneous materials such as rocks, and/or filter fabric;
g. Accessibility for maintenance, repairs, and cleaning.

H. Straw Bale Dike (See Appendix A – 5060)

1. Purpose: A straw bale dike intercepts and detains small amounts of sediment transported by sheet type runoff. The dikes detain sediment by ponding water and allowing sediment to settle out. Straw bale dikes also slow runoff velocities, thus reducing sheet and rill erosion. Straw bale dikes are also useful for erosion and sediment control around the perimeter of a construction site. Straw bale dikes may be used where the following conditions apply:

a. The placement area is not a slope nor likely to receive concentrated runoff;
b. The maximum slope gradient above the barrier is 2:1;
c. The maximum slope length above the barrier is 100 feet;
d. The placement area is suitable for ponding of sheet runoff and sedimentation can occur.

2. Design Considerations:

a. The bales are to be placed along the slope contour or at the toe of the slope.
b. The principal mode of action is to pond water and allow particles to settle. Straw bale dikes are not designed to withstand high heads of water, therefore they should be located where shallow pools can form.
c. Straw bale dikes are suitable for sheet flow only. Straw bales have a useful life of less than 6 months; however, the life is extended when used with filter fabric. When installed straw bale dikes must be trenched in and appropriately butted and anchored. Loose straw debris must be cleaned up on a regular basis.

I. Temporary Diversion Dike (See Appendix A – 5065)

1. Purposes:

   a. To divert storm runoff from upslope drainage areas away from unprotected disturbed areas and slopes to a stabilized outlet.
   b. To divert sediment-laden runoff from a disturbed area to a sediment-trapping facility such as a sediment trap or sediment basin.
   c. The upslope dike can improve working conditions at the construction site and prevent erosion. The down-slope dike assures that sediment-laden runoff will not leave the site without treatment.

2. Planning Considerations:

   a. It is very important that a temporary diversion dike be stabilized immediately following installation with temporary or permanent vegetation to prevent erosion of the dike itself. The gradient must have a positive grade to assure drainage, but if the gradient is too great, precautions must be taken to prevent erosion due to high velocity channel flow behind the dike.
   b. This practice can use material available on the site and can usually be constructed with equipment needed for site grading. Stabilizing the dike with vegetation can extend the useful life of the practice. Diversion dikes are sometimes preferable to silt fence because they are more durable, less expensive, and require much less maintenance when constructed properly. When used with sediment trap or sediment basin they become a logical choice for a control measure once the control limits of the silt fence or straw bale barrier have been exceeded.
   c. Temporary diversion dikes are often used as a perimeter control in association with a sediment trap or a sediment basin, or a series of sediment-trapping facilities, on moderate to large construction sites. If installed properly and in the first phase of grading, maintenance costs are very low.

3. Design Considerations:

   a. Drainage Area: 5 acres or less
   b. Velocity: maximum permissible velocity
   c. Recommended Dike Design:

side slope:	2:1 or flatter
width:	2 foot (top width)
height:	1.5 feet
Freeboard:	0.5 feet

   d. Channel Design:

shape:	parabolic or trapezoidal recommended

side slope: 2:1 or flatter

Stabilization: vegetation or riprap

e. Grade: The channel behind the dike shall have a positive grade to a stabilized outlet. If the channel slope is less than or equal to two (2%) percent, no stabilization is required. If the slope is greater than two (2%) percent, the channel shall be stabilized.

f. Outlet: Divert sediment-laden water into a temporary sediment trap or sediment basin. Runoff form undisturbed areas should empty into an outlet protection unless well stabilized natural outlets exist.

2.12 STORM DRAINAGE SYSTEM

A. **General** – The storm drain and flood control system is more specifically discussed in the Storm Drainage and Flood Control Design and Construction Standards. The following information is very general in nature and the Developer in designing and constructing these facilities shall use the above-mentioned standards.

1. Master Plan Compliance – Developers shall be familiar with the City's current Master Drainage Plan and other storm drainage and flood control reports and master plans. Developer shall contact the City's Engineering Department for information regarding these reports prior to beginning design of these types of facilities.

2. Design Criteria - Developers shall use the design criteria specified in the City's current Storm Drainage and Flood Control Design and Construction Standards. These standards are available from the City's Engineering Department.

B. **Retention/Detention Basins** – The Developer shall design and include regional (master planned) and on-site retention/detention basins as part of the project. The design of regional and on-site retention/detention basins shall be performed in accordance with the City's current Storm Drainage and Flood Control Design and Construction Standards, Master Drainage Plan and other pertinent master plans and studies. The design will also fulfill the requirements of Phase II of the UPDES. These measures are discussed more thoroughly in Section 3.11 of these standards.

C. **Storm Drain System** – The Developer shall design and include master planned and local storm drainage pipeline and other appurtenances as part of the project. The design of storm drainage facilities, including pipelines, shall be performed in accordance with the City's current Storm Drainage and Flood Control Design and Construction Standards, Master Drainage Plan and other pertinent master plans and studies. These measures are discussed more thoroughly in Section 3.12 of these standards.

D. **Storm Drain Sediment Protection**

1. Drop Inlet Sediment Barriers (See Appendix A – 5300 and 5330)

a. Purpose: Drop Inlet sediment barriers are intended to prevent sediment from entering the storm drains during construction operations. This

practice allows early use of the storm drain system and is applicable for the phased construction schedule of a wet weather plan. Sediment-laden runoff is ponded before entering the storm drain, thus allowing some sediment to fall out of suspension.

b. Design Considerations: A straw bale drop inlet sediment barrier can be used where the inlet is intended to drain a relatively flat disturbed area (slopes less than 5%) in which runoff velocity is low¾ less than 0.5 ft^3/sec. Barriers of this type should not be placed around inlets receiving concentrated flows such as those along major streets or highways. This practice must not be used near the edge of fill material and must not divert water over cuts or fills.

The contributing drainage area should be one acre maximum. The ponding area shall be relatively flat (less than 1%) with sediment storage of 35 yds^3 per disturbed acre. As an optional design, the straw bales may be omitted and the entire structure made of gravel and stone, see Appendix A – 5300 and 5330. A structure made entirely of stone is commonly called a "gravel doughnut." The top elevation of the sediment structure must be at least 6 inches lower than the surrounding ground elevation down-slope from the inlet. It is important that all storm flows pass over the structure and into the storm drain, and not past the structure. Temporary diking below the structure may be necessary to prevent bypass flow. Material may be excavated from inside the sediment pool for this purpose.

2. <u>Continuous Berm (See Appendix A – 5305)</u>

a. Purpose: A continuous berm is used to divert and intercept sheet type runoff. Continuous berms are useful for erosion and sediment control around the perimeter of a construction site. The berms can be used to detain and pond sediment-laden storm water and allow the sediment to settle out. The continuous berms may be constructed as filter berms; with aggregate and permeable filter fabric to facilitate the accumulation of sediment and the drainage of storm water.

b. Conditions Where Practice Applies:

(1) Whenever storm water runoff must be temporarily diverted to protect disturbed areas or sediment must be retained on site during construction.
(2) Continuous berms can be used in conjunction with or instead of silt fence and straw bale dike for perimeter type sediment control.
(3) Continuous berms, for sediment control, may be used where:
(4) sheet and rill flows would occur;
(5) the area drains to the barrier 1 acre or less;
(6) the maximum slope gradient above the barrier is 2:1;
(7) and the slope length above the barrier is 100 feet maximum.

c. Design Considerations:

(1) Continuous berms require a Continuous Berm Machine (CBM). The CBM is a material feeding (hopper) and fabric-rolling system that creates the continuous berm by 'wrapping' geosynthetic material around sand, aggregate, or soil.

(2) Trenching is not necessary. Continuous berms should be applied to relatively smooth surfaces to form a tight seal between barrier and the ground.

(3) Staking is not necessary since the density of the berm is approximately 100 lbs/ft3. The fabric is flexible so the barrier can stretch and curve and allow the berm to conform tightly to ground surface irregularities.

(4) The CBM requires a source of filler materials, either sand, aggregate or local soils. When used in conjunction with a transit mixer discharging sand and/or aggregates it is possible to produce berm at a rate of approximately 50 ft/min. Using local soils can reduce that rate by 2/3.

Continuous berms can be used to pond water and allow sediment to settle out. Continuous berms can be constructed as filter berms, with aggregate and permeable geosynthetic materials intended to facilitate its drainage of the ponded water. Segments of the continuous berm may be filled with aggregate to produce "drainage chambers" and/or drainage pipes with or without risers may be used with the berms.

3. Curb Inlet and Drop Inlet Sediment Barriers (See Appendix A – 5315, 5320, 5325 and 5330)

a. Purpose: Curb inlet and drop inlet sediment barriers are intended to reduce the sediment discharged into storm drains by ponding the runoff and allowing the sediment to settle out. The structures allow for overflow from high runoff events and the gravel allows the ponds to dewater rapidly.

b. Design Considerations: The gavel filled sandbag curb inlet and block and gravel sediment barrier can be used at curb inlets on gently sloping, paved streets where:

(1) water can pond and allow sediment to separate out of suspension; and

(2) runoff is relatively low, less than 0.5 ft3/sec.

Once the small catchment areas behind the sandbags or block and gravel fill with sediment, future sediment-laden runoff will enter the storm drain without being de-silted. Therefore, sediment must be removed from these structures during or after each storm. Additional storage can be obtained by constructing a series of sandbag barriers along the gutter so that each barrier traps small amounts of sediment.

2.13 STREAMBANK EROSION PROTECTION

A. **General** – Protection of channels used in storm water transmission is an important feature in the transmission of storm water flows from their place or origin to either a sedimentation basin, storm water detention basin, or other storm water facility. Since the

storm water flows are concentrated in these channels, special care must be taken to ensure that sufficient protection is provided within the channel cross-section to eliminate erosion. Any work performed in streams under the jurisdiction of the Corp of Army Engineers (COE) are to meet their requirements. The following information is to be considered when designing facilities associated with storm water channels.

B. **Coir Roll and Coir Mats (See Appendix A – 5400)**

1. Purpose: Coir rolls and coir mats are commonly used for stream bank stabilization and shoreline protection. These bioengineering components provide immediate erosion control while also providing a stable medium to support the growth and development of plants. The coir (coconut fiber) material is natural, long lasting, and has high tensile strength. The fiber material can replace commonly used structural components such as rocks, riprap or logs. The coir rolls and mats can then be planted with appropriate vegetation. The fiber rolls and mats accumulate sediment while the plants grow and the plants roots develop. Eventually the coir material biodegrades and the cohesive strength of the root systems and flexible nature of the plants become the primary stabilizing element.

2. Conditions Where Practice Applies: Soil bioengineering techniques utilizing coir rolls and coir mats are generally appropriate for:

   a. Stream bank stabilization;
   b. Shoreline stabilization;
   c. Wetland mitigation or restoration; and
   d. Other riparian areas where immediate erosion control is needed while also creating hospitable conditions for plant establishments.

   Where perennial flows of water occur, coir rolls are generally placed offshore to break waves or applied at the toe of stream bank as a type of soft armor. Coir rolls provide a substrate for plant growth and facilitate sedimentation behind the roll by capturing sediment, mineral and organic materials.

2. Design Considerations: Bioengineering techniques utilizing coir rolls mats and vegetation should be considered as an alternative to stone revetments or other structural measures. Bioengineering techniques address aesthetic and ecological concerns by encouraging vegetation and wildlife habitat. Bioengineering techniques rely on plants and structures to function together in mutually reinforcing and complimentary rolls. With coir rolls and coir mats, the high tensile strength coconut fibers, fiber netting and the wooden stakes used to anchor the material all comprise the structural components of the system.

   Coir rolls, coir netting and coir mats also have high moisture retention properties and will generally last from 4-12 years. However, coir fiber's strength, longevity and ability to hold moisture depend on the type, density and grade of coir material chosen.

   Traditional processing of coconut fibers result in several different grades of coir. During processing, the initially separated fiber is called mattress

fiber coir, which is very short, thin and flimsy. The next grade of coir separated from the husk is called omat fiber coir. Once the mattress and omat fiber coir are separated, the remaining coir is called bristle fiber coir. Bristle fiber coir is longer, thicker, heavier and stronger compared to the other types.

Coir rolls are commonly available in 12-inch, 16-inch, and 20-inch diameters. The density of the coir logs and coir mats depends on the type of fibers used in construction and how tightly the fibers are compacted. Tensile strength, unit weight, open area, thickness and coir type are important properties to consider when woven coir blankets, and coir netting or coir rolls are specified. For instance, high density coir rolls, 9 lbs/ft3, might be more appropriate for high wave or high stream energy situations when low density rolls, 6 lbs/ft3, would be perfectly acceptable for wetland mitigation. Use light density coir if plant establishment is the only goal. Use high-density coir if protection from high wave or high stream energy, longevity and plant establishment is the project goals.

C. **Gabions (See Appendix A – 5400)**

1. Purpose: To protect stream banks from the erosive forces of moving water. Rock-filled gabions can be used to armor the bed and/or banks of channels or used to divert flow away from eroding channel sections.

2. Conditions Where Practice Applies: Rock-filled or vegetated rock gabions are applicable to stream bank sections which are subject to excessive erosion due to increased flows or disturbance during construction. This practice is applicable where flow velocities exceed 6 ft/sec. and where vegetative stream bank protection alone is not sufficient. Gabions can be used to construct deflectors or groins intended to divert flow away from eroding stream bank sections. Gabions are also used to construct retaining walls and grade control structures.

   a. Gabion Mattresses, also referred to as Reno mattresses or revet mattresses are not as thick as standard gabions, usually 0.5, .75, 1-foot. Gabion mattresses are used to line channels, armor stream banks and slopes, and used with gabions for grade control structures (spillways or aprons).

      Gabions and gabion mattresses are often preferable to rock riprap alone. For any given hydraulic condition, the gabion or gabion mattress revetment thickness is one third (1/3) of an equivalent riprap design.

      Gabions and gabion mattresses are flexible and free draining thus allowing some soil settling. They can be used in unstable streambeds and stream banks. Gabions can provide an important component to a 'bioengineering' solution for stream bank or slope erosion because they allow the growth and establishment of natural vegetation.

      Gabions containers are generally fabricated from a double-twist, hexagonal mesh of heavily zinc coated wire. Some gabions use welded wire. As an option the wire can be coated with PVC. Wire diameter is

0.086 inches for the double twisted gabion mattress and 0.106-0.120-inches for the double twisted gabion. The welded wire gabion use wire diameters of 0.120-inches or greater.

The rectangular gabion is divided into cells with diaphragms of equal capacity. The compartments add strength and assure that the full material remains evenly distributed. Gabions and gabion mattresses come in various sizes. Choose the dimensions of the gabions or combination of gabions to meet the design requirement site conditions.

Table 1. Typical gabions sizes

Letter Code	Length Ft	Width Ft	Depth Ft	# of Cells	Capacity in CY
A	6	3	3	1	2
B	9	3	3	2	3
C	12	3	3	3	4
D	6	3	1.5	1	1
E	9	3	1.5	2	1.5
F	12	3	1.5	3	2
G	6	3	1	1	0.666
H	9	3	1	2	1
I	12	3	1	3	1.33
T	9	6	.75	3	2
U	12	6	.75	4	1.33
Q	9	6	.5	3	1.33
S	9	6	.5	2	1

The mesh opening for gabions is typically or nominally 3.25 x 4.5 inches (TYPE 8 x 10). Some gabion mattresses have mesh openings of approximately 2.5 x 3.25 inches (TYPE 6 x 8). Both styles perform hydraulically equivalent.

3. Site Considerations: All of the general stream bank stabilization considerations are to be followed. The following are specific considerations for gabion structures. Gabion walls are appropriate where:

   a. The vertical integrity of a soil bank needs a higher tensile strength to reduce sloughing of the stream bank.
   b. There is moderate to excessive sub-surface water movements that may be creating erosion and damage other types of non-permeable structures.
   c. An excessively steep stream bank must be stabilized and vegetative or extreme mechanical means of stabilization (i.e., pulling back bank) are not feasible due to site conditions.
   d. Where slope must be modified while heavy machinery is unavailable to the site.
   e. Fill must be disposed of along an eroding stream bank (fill can be placed behind gabion to modify slope).
   f. A retaining or toe wall is needed to stabilize the slope.

g. Rock riprap is an appropriate practice but the available or desired rock size (smaller) is not sufficient alone to resist the expected shear stress exerted on the revetment.

4. Types of Gabion Structures:

a. Gabion Wall - a gabion wall is basically a gravity wall, which relies on their own weight and frictional resistance to resist sliding and overturning from lateral earth pressure.
b. Vegetated Rock Gabion - a rock-filled gabion earth-retaining structure, which has live branches, placed between each consecutive layer of rock-filled baskets. The live branches will take root inside the gabion and into the soil behind the structure. The vegetation will consolidate the structures and bind it to the slope.
c. Gabion Deflector - deflector or groins project into the streams and divert flows away from eroding stream bank sections.
d. Gabion Aprons - rock filled gabions or gabions mattress used as outlet protection, energy dissipators or spillways. These semi-flexible gabions are designed to settle without fracture and adhere to the ground if scour occurs.
e. Grade Control - drop structures or weirs. Gabion baskets and mattresses can be combined to construct check dams or weirs.
f. Channel Lining - gabion mattresses can be used to line channels. The lining thickness depends on many factors such as the type of rock, design flow velocity, sediment and bed-load, and channel gradient.

D. **Structural Stream Bank Stabilization (See Appendix A – 5410)**

1. Purpose: To protect stream banks from the erosive forces of moving water, where vegetative or bioengineered methods are insufficient or infeasible.

2. Conditions Where Practice Applies: Applicable to stream bank sections, which are subject to excessive erosion due to increased flows or disturbance during construction. Generally applicable where flow velocities exceed 6 ft/sec. or where vegetative stream bank protection is inappropriate.

3. Planning Consideration:

a. Stream channel erosion problems vary widely in type and scale and there is no one measure that works in all cases. Stabilization structures should be planned and designed by an engineer with experience in this field.
b. The purpose of this specification is merely to point out some of the practices, which are available, and to establish some broad guidelines for their selection and design.
c. Before selecting a structural stabilization technique, the designer should carefully evaluate the possibility of using vegetative stabilization alone or in conjunction with structural measures, to achieve the desired protection. Vegetative techniques are, generally, less costly and more compatible with natural stream characteristics.

4. Design Criteria: Since each channel segment requiring protection is unique, measures for structural stream bank protection should be installed according to a plan based on specific site conditions. Develop designs according to the following principles:

   a. Make protective measures compatible with other channel modifications planned or being carried out in other channel reaches.
   b. Use the minimum design velocity of the peak discharge of the 10-year storm. Structural measures must be effective for this design flow and must be capable of withstanding greater flows without serious damage. Riprap, gabions or other suitable materials should be used to stabilize the stream banks to the 10-year flood level or the top, whichever is lower.
   c. Ensure that the channel bottom is stable or stabilized by structural means before installing any permanent bank protection.
   d. Ensure that stream bank protection extends between stabilized or controlled points along the stream.
   e. Do not change channel alignment without a complete evaluation of the anticipated effect on the rest of the stream channel, especially downstream.
   f. Give special attention to maintaining and improving habitat for fish and wildlife.

   The upper portion of the bank should be covered with topsoil suitable for growing grasses, shrubs, and trees.

2.14 MISCELLANEOUS EROSION/SEDIMENT CONTROL BEST MANAGEMENT PRACTICES

A. **General** – By the use of sediment control on the project, the Developer/Builder needs to acknowledge the following

   1. Maintenance of the sediment controls will be performed on a weekly basis or as directed by the City.

   2. Re-grading will occur on a regular basis as necessary to eliminate concentrated flows.

   3. Sediment Control Inspections forms are to be filled out on a weekly basis and provided to the City. Sediment controls contained herein, cover the period of time of first land disturbance through and including final stabilization of the soil by vegetation, concrete, pavement or other City approved material. Failure to maintain sediment controls or to submit completed inspection forms will be the basis for a Work Stop being placed on the project and a Class C Misdemeanor issued. The sediment controls discussed herein are required on all projects without exception, other approved sediment controls are discussed in section 3.

   4. Mud tracking – Each construction site is required to have facilities and practices in place which eliminate the tracking of mud from the construction site onto City roadways. This shall mean that each construction site shall have in place, at least one construction entrance equipped with wash-down equipment to wash off vehicles and their tires so that mud is not tracked onto City streets.

B. **Construction Entrances (See Appendix A – 5105)** – A pad of crushed stone, aggregate, and gravel located where the construction traffic enters or leaves a construction site. The purpose of the construction entrance is to reduce the potential for vehicles tracking sediment, dirt or debris from the construction site onto City streets. In the event of a storm, water event the stone or gravel will act as a check dam retention structure to control flows. It is the intent of this requirement that the adjacent paved surfaces will remain free of materials tracked off of the site. The developer is required to maintain clean streets at all times.

At any point of ingress or egress at a construction site, where adjacent traveled way is paved, a stabilized construction entrance will be installed. The following shall be taken into account in design of such an entrance:

1. Native soils will not be allowed as part of construction of the construction entrance.

2. The construction entrance shall not extend more than 3-feet into the paved area.

3. 2 to 3-inch course aggregate shall be used.

4. The course aggregate shall be place to a sufficient depth to protect the street, sidewalk and curbing but shall not be less than 8-inches in depth.

5. The construction entrance is to extend a minimum of 50-feet behind the curb and gutter.

6. Geotextile fabric shall be used for entrances.

7. All ingress and egress to the construction site is limited to the use of this entrance unless otherwise approved. More than one entrance is allowed, however, the perimeter protection shall not deteriorate.

At a point of ingress or egress at a construction site, where the area is unapproved, the following conditions will apply:

1. Clear, grub and grade the area to provide a slope of 2-percent, minimum.

2. Compact the sub-grade as required.

3. Place a designed geotextile separation fabric as part of the construction entrance.

4. Place coarse aggregate, 2 to 3-inches in size to a depth of 8-inches minimum.

The Developer is responsible for maintaining the construction entrance as follows:

1. Inspect the entrance daily for loss of gravel and/or sediment buildup.

2. Inspect adjacent roads daily for gravel or sediment deposits.

3. Clean areas by sweeping or shoveling not by washing down the area with water.

4. Repair the entrance and replace gravel as required to maintain entrance in good working order.

5. Expand entrance area as required to accommodate traffic, prevent damage to concrete structures and avoid sediment being wash away in a storm water event.

The construction entrance shall be removed once the project has received final inspection approval and the front of the lot has been landscaped to the approval of the erosion control specialist.

The Engineer shall design the work covered under subsection 2.5 to meet the following technical specification section:

1. Section 02276 – Stabilized Construction Entrance

C. **Sedimentation Basins (See Appendix A – 5110)** – The need for sediment basins shall be identified through the preparation of a scour and sediment transport study to be prepared for projects which discharge their storm waters into a natural runoff channel or stream. The study shall be prepared by a registered civil engineer experienced in sediment transport and scour analysis and shall be approved by the City prior to the Developer retaining the consultant. An outline of the report shall be submitted to the City for approval prior to initiating the study. The draft of the report shall be submitted to the City for review and comment and the City's comments shall be incorporated into the report prior to finalizing the report. The final report shall indicate recommendations to eliminate/reduce scour and sediment transport in the existing natural discharge channel and shall also identify the size, location and proposed generalized design of any sedimentation basins needed for the project to include.

1. Energy dissipaters designed with the design procedure as shown in HEC 14.

2. The sedimentation basin stabilized with vegetation and the mulch protection as required by the City's Effective Planting Plan.

3. All materials used within the sedimentation basin shall be capable of allowing vegetative growth in around or through the structure. Concrete energy dissipaters are discouraged.

4. Temporary irrigation system if vegetation is planted outside the native planting window.

5. If the basin is also used as a detention basin or has a flow outlet demonstrate the flow path length is sufficient enough to have sediment drop.

6. Complies with the UPDES Phase II requirements.

The preliminary and final design of the sedimentation basin shall be reviewed and approved by the City prior to proceeding.

D. **Concrete Structures** – The design of concrete structures related to grading, erosion and sedimentation control and re-vegetation shall be performed by a registered civil engineer.

The developer's engineer shall submit a comparison of structures indicating concrete structures are the only stable structures to use. The design shall take into account the requirements of Section 3.9 of these standards

E. **Limits of Disturbance (LOD) Control** – The Developer shall design the project to provide for LOD control. LOD is considered to be a minimum protection when erosion control methods are not used. These measures are discussed more thoroughly in Section 3.5 of these standards.

2.15 VEGETATION AND REVEGATATION

A. **General** – The purpose of this effort is to establish native and other appropriate plant species on disturbed areas, which will assist in the stabilizing of these disturbed areas, and reduce the possibility of erosion. Other support efforts associated with vegetation and re-vegetation will include seedbed preparation, topsoil, appropriate mulch protection, energy dissipaters and other areas which will assist in allowing cut and fill slopes and other disturbed areas in being re-vegetated.

B. **Planting and Irrigation of Cut and Fill Slopes** - All cut and fill slopes greater than three (3') feet in height shall be planted and irrigated with a sprinkler system in accordance with the provisions of this chapter.

1. The land disturbance permit holder, or his authorized representatives, shall be responsible for installing all landscaping in accordance with an approved landscape planting plan, for a sprinkler system, and for maintaining all cut and fill slopes. The installation of the landscaping and of the required sprinkler system shall be complete within six (6) months after the date of the termination of the grading. Deviations from the requirements of this section may be permitted in exceptional circumstances or where unavoidable hardship would result from a strict application of these requirements when a waiver has first been obtained from the City Engineer. A separate bond or cash deposit shall be posted with the City Engineer to guarantee such landscaping, sprinkler system, and the maintenance thereof, and such bond or cash deposit, or portions thereof, shall not be released until the landscaping has been established for at least one hundred, twenty (120) days after planting and permanent responsibility for the landscape maintenance has been established.

2. Landscaping planting plan. A landscaping planting plan shall be prepared and submitted for approval by the City Engineer and the Community Development Director prior to obtaining a land disturbance permit. A soil test shall be made to determine the plant materials which are suitable for the slopes, and the plant materials utilized on the slopes shall be compatible with the soils report and in accordance with the approved planting schedule or as required by a condition of a site plan or final plat map. There shall be a variety of ground covers, trees, and shrubs incorporated into the landscaping plan and utilizing plants from the "Approved Planting Schedule" set forth in subsection (d) of this section. Other plant materials may be substituted for the "Approved Planting Schedule" if submitted and recommended by a registered landscape architect and approved by the City Engineer.

3. Irrigation plan. An irrigation plan for the sprinkler system to be installed on all cut and fill slopes shall be submitted to and approved by the City Engineer prior to the issuance of the land disturbance permit.

4. Approved planting schedule. All plants required by the provisions of this section shall select from Section 2.15.C. Vegetation and Revegetation Development Standards and 2.15.D. Effective Planting Plan of these standards.

C. **Vegetation and Re-vegetation Development Standards**

1. Native vegetation shall be removed only when absolutely necessary; e.g. for the construction of buildings, roads and fill areas, as approved by the City Planning Commission. When removal of vegetation is required see Tree Removal Application Standard and information contained herein:

LIMITS OF DISTURBANCE TABLE	
Area	Maximum Limits of Disturbance
Roads	The catch line of road, plus two feet
Buildings	The foot print of the building plus 10 ft. (total 5 ft. in each direction)
Fill Areas	The toe of slope plus 2 ft.
Cut Slopes	Top of Slope

a. The Developer or Contractor shall provide a barrier of protection at the limits of disturbance to prevent additional areas from being disturbed.

2. Re-vegetation of areas within the area of disturbance will be as required within 3 weeks of reaching final grade. Temporary irrigation will be required during the initial establishment of the vegetation unless waved by the Erosion Control Specialist. Temporary irrigation is defined as aboveground water dispersion system. The Developer shall remove the temporary irrigation system after approval of the Cit Engineer.

3. The Developer shall submit the proposed seed mix to the City and provide the following for each bag of seed used 30 day before starting the re-vegetation.

   a. Labeling and identifying the contents of the seed mixture by scientific and common name).
   b. Quantity of seed as a function of pure live seed (PLS).
      PLS = purity x germination.
   c. Date of the germination or tetrezolium tests
   d. The date of analysis shown on each bag shall be within nine months of the time of use.
   e. The City reserves the right to request a sample of the seed mixture for the purpose of analysis and testing. The Developer shall pay for said testing.

4. Seedlings and shrubs are to be indigenous to the area being revegetated. The seedlings and shrubs should:

a. Be from a reputable dealer
b. Identified with scientific and common name
c. Temporary irrigation, as defined above, shall be required during the initial establishment of the seedlings or vegetation.

5. All seeds, seedlings, shrubs and trees shall be protected with a mulch material that has been designed for site-specific conditions. The mulch material shall meet the following criteria:

   a. The City's Effective Planting Plan will be used in determining mulch protection required for the seed.
   b. Test results from an independent testing agency (i.e. TTI, UWRL) will be submitted to the City, indicating that the mulch material proposed is appropriate for the specific conditions of the site, including that the mulch material is compatible with the proposed seed mix.
   c. Submit to the Engineering Department, acceptable results from the Universal Soil Loss Calculations (USLE) or the Revised Universal Soil Loss Calculations (RUSLE), indicating that the soil loss does not exceed 15 times the baseline calculated soil loss. This analysis is to be performed by one of the following individuals; soil conservationist, agronomist, certified professional erosion and sediment control specialist.
   d. The mulch material application guidelines that indicate site specific conditions.

6. The re-vegetation work shall be performed by persons or firms, having expertise in re-vegetation of similar site-specific site conditions on the proposed re-vegetation site. The re-vegetation contractors, erosion control specialist and landscape architects are acceptable providing they can demonstrate their expertise in re-vegetation of similar site-specific conditions.

7. At the request of the Developer and/or at the end of the warranty period, which is three years, of the re-vegetation bond, the City will perform an inspection to determine if the vegetation has been established enough to prevent future erosion. The technical procedure in determining if the vegetation has been established enough to stabilize the soil against either rill or gully erosion is the quadrant frame method or the step transect method. Both methods suffice in comparing plant cover, species richness and acceptable soil loss and shall be covered on re-vegetated area and adjacent undisturbed and/or native site. Either method will be performed at several randomly selected locations. A reclaimed herbaceous natural plant community having 80% of the cover and species abundance of adjacent undisturbed perennial vegetation will be deemed successful.

8. Re-vegetation Bond and Re-vegetation Agreement: A re-vegetation bond shall be established in accordance with City policy and standards as approved by the City attorney. A fully executed re-vegetation agreement shall accompany the bond.

D. **Effective Planting Plan** – To satisfy the re-vegetation requirements of the City ordinances and the International Building Code, IBC, this effective planting plan has been compiled. The proper and recommended installation of the material state herein, is a requirement to satisfy the re-vegetation bond release periods.

1. Temporary Seeding – Subdivisions and other developments may benefit from temporary seeding. The intent of this seeding is to temporarily control dust, control weeds, and reduce the possibility of erosion on vacant lots until permanent-stabilizing measures can be implemented. Care should be taken to use a seed mixture that will not compete with establishing permanent seeding. Temporary seeding requires the same irrigation requirements and mulch protection requirements, as does permanent seeding. The use of temporary seeding does not satisfy the requirements of the Re-vegetation Bond and used in areas with slopes less than 5 H.: 1 H. Seed suppliers should be contacted for the most current seed available before specifying the seed mix, the seed mix should use these seeds within the seed mix:

   a. Sterile Annual Ryegrass
   b. Rye, winter or spring
   c. Barley, spring
   d. Oats, spring
   e. Wheat, winter or spring
   f. Slender Wheatgrass

2. Slopes – Erosion is reduced by the root zone matrix of grasses, therefore the use of grasses is one of the essential elements for the requirements to satisfy the re-vegetation bond release requirements.

   The use of wildflowers are atheistically pleasing and is encouraged by the City, however, the wildflower portion of the seed mix should be minor. The use of shrub or tree seedling may be required based on the native condition of the land prior to disturbance.

   The seed mixture applied to the slopes should be at approximately 40 lbs. per acre with upland dry seed mix. The following grasses should be included the seed mix specified:

Common Name	Scientific Name
Sodar Streambank Wheatgrass	Agropyron, riparium
Nezpar Indian Ricegrass	Oryzopsis hymenoides
Western Wheatgrass	Agropyron smithi
Blue Bunch Wheatgrass	Agropyron spicatum

3. Seed/Seedling – The vegetation community in the native areas of the City has several shrub species along with native grass and flowers. Prior to any land disturbance a field inventory of the native vegetation community, including cover estimates, is to be submitted to the City for review. This inventory will establish the replace species and percentage of cover on the project, this is to ensure the re-vegetation of area to pre-disturbance conditions, the cost of the seedlings is to be included in the re-vegetation bond.

4. Hillside Regions – Seed/Seedlings to be planted shall be primarily perennial natives. The vegetation inventory will determine actual specie types. The listed seedlings should be among the mixture of seedlings used.

Common Name	Scientific Name
Squawbush	Rhus trilobata
Wyoming Sagebrush	Artemisia tridentata wyomingensis
Gambel Oak	Quercus gambelli
Antelopebrush	Purshia tridentata
Rabbitbrush	Chrysothamnus nauseosus
Winterfat	Eorotia lanata
Mountain Sagebrush	Artemisia tridentate

5. Wetland and Riparian Areas – To ensure protection the native habitat, filtration of water and bank protection from erosion. A plant inventory will determine the existing specie and coverage of wetland vegetation and will be the basis to determining the re-vegetation specie. In areas containing the Russian Black Olive tree the developer will substitute the Russian Black Olive tree with an acceptable native woody plant. The City and Corp of Army Engineers will determine the acceptability of the replacement seedlings.

6. Channels, Swales, Toe Ditches, Inceptor Ditches and Concentrated Flows – The flow characteristics of channels, interceptor ditches or toe ditches used in urban storm drainage may require the use of a turf reinforced mat. A qualified professional shall design and specify the appropriate matting based on Federal Highway Administration requirements. The following grasses should be used in the seed mixes and applied at a minimum rate of 30 lbs./acre:

Common Name	Scientific Name
Ephraim Crested Wheatgrass	Agropyrona cristation
Sodar Streambank Wheatgrass	Agropyrona riparium
Western Wheatgrass	Agropyrona smithii
Covar Sheep Fescue	Festucia ovina
Perennial Ryegrass	Lolium perenne

7. Mulch Protection – The mulch is to provide a biomass that will promote germination, protect against erosion, and provide moisture during the dry seasons, for at least two years to three years depending on the elevation of the land disturbance.

Area Elevation	Years
Valley and Foothills	Two Years
Mountains above the 5,200 foot elevation	Three Years

8. Materials and Methods

Slope	Acceptable Products	Anchors (b)

(Horiz:Vert)		(per sq. yd)
40:1 to 10:1	Hydro mulch and seeding (a) Drill seeding with native soil cover (a) Land Imprinting (a) Straw crimping (a,b)	N/A
10:1 to 3:1	Mechanically Anchored Straw (a,b) Manufactured straw or excelsior blanket with netting one side (e) Land Imprinting (a,e)	c per manufacturer's recommendation
3:1 to 2:1	Manufactured straw/coconut mat, straw mats with netting on both sides, Wood excelsior blanket with netting on both sides (e)	d As per manufacturer's recommendations

Notes:

a. A temporary irrigation system will be required for the early days of germination.

b. To be used only in a wind protected area, as approved by the City.

c. Slope length not to exceed 50 feet unless manufacturer can demonstrate by the R.U.S.L.E. or other appropriate the material BMP will work. Empirical information will not be acceptable.

d. This is a minimum standard only. Anchors are to keep the matting in direct contact with the soil. Additional staples may be required at the direction of the City.

e. The soil to be at optimum moisture within the top six inches of soil. Optimum moisture to be determined by geotechnical report.

9. Irrigation – The developer/builder is responsible for providing reasonable amount of moisture to promote growing conditions of the revegetation project. The City recommends temporary irrigation to be used a minimum of 60 days year round. However, the City requires temporary irrigation to be used for a minimum of 60 days between May 1 and October 15.

E. **Erosion Control / Re-vegetation Plan** – The Developer is responsible for preparing a re-vegetation plan for the project which identifies seedbed preparation, erosion control BMP to be used, temporary seeding efforts, permanent seeding, mulching, inlet sediment barriers and other items related to re-vegetation and erosion control.

The re-vegetation plan shall include the following:

1. A field evaluation of the existing vegetation to include herbaceous plant cover, overall species abundance, and plant litter.

2. An evaluation of noxious or prohibited restricted weeds.

3. A list of target native perennial species to be included in the seed mixture.

4. Preliminary soils information based on published soil surveys.

5. Routine soil sample to evaluate fertility requirements for reclaimed areas.

6. A follow-up vegetation inventory during the second growing season on reclaimed land to evaluate the successful establishment of target perennial vegetation.

7. A final vegetation inventory prior to bond release evaluating vegetative cover and species abundance to ensure 80% establishment of adjacent undisturbed areas.

The Engineer shall design the work covered under subsection 2.5 to meet the following technical specification section:

1. Section 02902 – Re-vegetation Plan
   Also in Section 4 or these Standards

F. **Permanent Seeding** – The Developer is to provide for the design and installation of permanent seeding and related items for the project. This practice will establish perennial and permanent plantings for a site within 21 days of final grade being reached. These measures are discussed more thoroughly in Section 3.13 of these standards.

SECTION 3.0

MATERIALS

3.1 GENERAL REQUIREMENTS

This section discusses the materials involved in grading, erosion, sedimentation control and re-vegetation efforts and associated construction activities. Design and construction related to storm drainage facilities is subject to the design and construction standard for that specific type of facility. Separate design and construction standards are available from the City's Engineering Department for culinary water, sewer, secondary water road and bridge construction and storm drainage and flood control facilities. This standard is in addition to previously mentioned standards, in the event a conflict arises the more restrictive standard will govern. The materials selected have been chosen for their strength, durability and ease of maintenance. All materials, unless specifically approved otherwise, shall be new and unused.

Where applicable, American Pubic Works Association (APWA), American Society of Testing Materials (ASTM), American Association of State Highway Transportation Officials (AASHTO) or other standards have been referenced and it shall be the responsibility of the developer/engineer /contractor to be familiar with those standards to insure compliance. This standard will govern in the event of a conflict. Titles corresponding to the specific numbers are given in the reference section of the standards.

In some instances, particular manufacturers and product names have been mentioned as being approved. Other products may also meet the requirements, but must be first approved in writing by the Engineering Department. Two factors that are considered by the Engineering Department and the City Engineer in products as approved:

1. Products performance of the Texas Transportation Institute (TTI), Manufacturer's Literature or Utah Water Research Lab.

2. The calculation results of the USLE or RUSLE on a site specific design.

Manufacture's literature not based on results from an independent testing facility will not be considered. Manufactures will be required to submit the complete report from the independent testing facility to the Engineering Department for a complete review on alternate products.

If at any time the Engineering Department believes that the use of a specific product must either be halted or changed, the City Engineer has the authority to make the change providing the decision is based upon an engineering, performance or maintenance evaluation. A copy of all technical specifications is contained in Appendix B.

3.2 TESTING AND FINAL ACCEPTABILITY OF MATERIAL

The Engineering Department will require such tests and certifications as deemed necessary to show that the specified materials have been employed. Notwithstanding prior factory or yard inspections, the City Engineer will have the right to reject any damaged or defective materials found on the job and order its removal from the site. Further information on testing is contained in Section 9.0 – Testing, of this manual.

3.3 TOPSOIL

A. **General** – Topsoil shall be stripped, stockpiled, or live hauled in accordance with the requirements of these standards and the Contract Documents. The Contractor shall, where possible, keep the height and size of topsoil piles to a minimum. Topsoil is to be used only to stockpile and replace for re-vegetation, excess handling of the topsoil should be avoided. Stockpiles are not to exceed 25 feet in height and the amount of time the topsoil piles kept in a stockpile is also to be kept to a minimum. The intent of topsoil stockpiling is to retain the soil structure, preserve pore space essential for microorganisms and provide an environment that will retain the soil fertility to promote the restoration of native seeds indigenous to the area.

Stockpiles are to be setback at least 100-ft away from native undisturbed areas and live bodies of waters, including seasonal drainage channels. The developer may propose BMP to prevent the stockpile from eroding from wind or water. The intent of the topsoil setbacks is to preserve native vegetation, preserve drainage channels and satisfy the UPDES regulations

The Developer may also propose other methods and locations of stockpiling topsoil for review and approval by the City. Satisfying the intent of stockpiling topsoil and the setbacks indicated herein, for reviewing any proposed stockpile location.

The Engineer shall design the work covered under subsection 2.6 to meet the following technical specification section:

1. Section 02925 – Topsoil

3.4 EROSION CONTROL

A. **General** – Interim measures could be used in the areas that have been graded and left exposed and not brought to final grade within 21 days of initial disturbance. The measures discussed below include the use of mulch, organic tackifiers and temporary seeding for interior slope stabilization.

1. Interior Slope Stabilization, Mulch – The placement of material to stabilize the soil against the forces of wind and water as an interim measure could include tackifiers, sediment controls, temporary seeding, wood mulches, water, manufactured mulch blankets made from excelsior or straw.

   Interim soil stabilization, measures are to be applied to the soil from the day of initial disturbance until the soil has received approved erosion control and re-vegetation measures as per the Re-vegetation Bond.

   Site-specific conditions will determine the recommended seed mix. Check with the project's Development guidelines, City of South Jordan, local seed suppliers or County Extension Service for recommended mixes for site-specific conditions.

The Effective Planting Plan will determine the actual mulch material used to protect the seed. Provisions for temporary irrigation is required throughout the year.

The re-vegetation project approval will be based on the Re-vegetation Bond reductions procedures. It is the responsibility of the developer to select, install, irrigate and maintain the project in such a manner as to qualify for the bond reductions.

2. Slope Stabilization, Temporary Seeding – Temporary seeding means the growing of a short term perennial or annual cover (plants) on a disturbed construction site that is disturbed and the use of temporary seeding is to control erosion from wind or water. The use of temporary seeding is recommended for areas that have been disturbed and requires stabilizations and the City deems it not appropriate for a re-vegetation bonds. An example of this would be a residential subdivision that has been massed graded and the City agrees with the developer, residential home construction will invalidate the re-vegetation bond.

   Temporary seeding is subject to the same seed protection requirements as outlined in the effective planting plan. This practice is to use fast growing grasses whose root system hold down the soils so they are less apt to be carried offsite by water or wind. Another advantage of temporary seeding is it reduces the problems associated with mud and dust from bare soil during construction.

   Whereas temporary seeding requires temporary irrigation and the same mulch protection as permanent seeding, it could be more cost effective to evaluate chemical stabilizers.

The Engineer shall design the work covered under Section 2.0 and Appendix B to meet the following technical specification section:

1. Section 02271 – Erosion Control

3.5 LIMITS OF DISTURBANCE (LOD)

A. **General** – Limits of disturbance (LOD) barriers are to be placed, reviewed and approved in writing by the Engineering Department prior to any land disturbance. Approved minimum barrier are described below.

   1. Fabric: Design for site specific conditions

   2. Posts: 2 x 2, 6.0-ft long to be approved by the Engineering Department.

   3. Wire Mesh: 14 gage min. with 6 inch minimum openings

   4. Wire Stables: 1-inch long, hog rings or wire ties are acceptable when approved by the City Engineer.

   5. Straw Bales: Not acceptable

   6. Pre-manufactured barriers are acceptable when approved in writing by the Engineering Department.

   7. Straw wattles

The LOD boundary control is to be installed by placing posts on 6-foot centers with a minimum 2- foot of bury and 3-feet exposed above grade. The Contractor is to excavate the anchor trench on the uphill side of the posts. The wire mesh shall be secured to posts on the up-hill side of the posts from the bottom of the trench to the top of the posts. The

Contractor is to install the fabric as required to encase trench and drape over top of fence by 1-foot minimum. The fabric is to be secured to the posts and wire mesh a minimum of every 6-inches vertically and one foot horizontally. The Contractor is to then backfill the trench over the geotextile fabric to anchor it in place.

The Contractor is to maintain the fence by inspecting it after each rainfall and\or during a heavy or prolonged rainfall or as required by the Erosion Control Specialist. The Contractor shall make adjustments or repairs to the fence to prevent runoff from bypassing the ends of the fence, or by under cutting the trench in which the fabric has been installed. When LOD barrier also functions as a sediment control BMP, the Contractor is to remove the accumulated sediment before it reaches ½ the height of fence. The LOD barrier will be reported on the erosion control and sediment control inspection as required by the City.

The site boundary control may be removed after construction has received its final inspection approval or as approved by the Engineering Department.

The Engineer shall design the work covered under subsection 2.3 to meet the following technical specification section:

1. Section 02279 – Silt Fences

3.6 EROSION CONTROL

A. **General** – Permanent erosion control measures are those, which will be constructed to provide for long-term (2-5 year) protection of soils on the project. These differ from sediment control BMP. These measures include the following:

1. Mulch – When used with out vegetation, mulch is a temporary erosion control practice where materials such as grass, woodchips, wood fibers, straw, or gravel are placed on the soil surface. When used without biodegradable netting these materials act independently and are also very erode able. Therefore, the depth of mulch criteria is as indicated in the chart. The LS factor in the USLE or the RULSE dictate when the slope length increase so does the depth of the mulch. The advantages of using mulch are:

    a. Mulch slows the water down, thus increasing the time of concentration for storm water calculations.
    b. Provides protection for the germination and survival rate of seeds and seedlings.
    c. When used with a biodegradable netting a matt effect can be accomplished.

MULCH APPLICATION RATES			
Type of Mulch	Mulch Rate (tons/acre)	Land Slope (percent)	Slope Length Limit (Feet)
Straw	1.0	1-5	200
	1.0	6-10	100
	1.5	1-5	300
	1.5	6-10	150
	2.0	1-5	400
	2.0	6-10	200
	2.0	11-15	150
	2.0	16-20	100
	2.0	21-25	75
	2.0	26-33	50
	2.0	34-50	35

MULCH APPLICATION RATES			
Type of Mulch	Mulch Rate (tons)	Land Slope (%)	Slope length limit (feet)
Crushed Stone ¼ to 1-1/2 inch	135	< 16	200
	135	16-20	150
	135	21-33	100
	135	34-50	75
	240	< 21	300
	240	21-33	200
	240	34-50	150
Wood Chips	7	< 16	75
	7	16-20	50
	12	< 16	150
	12	16-20	100
	12	21-33	75
	25	< 16	200
	25	16-20	150
	25	21-33	100
	25	34-50	75

*Note: Slope length limit specified is the length of slope for which the mulch rate specified is effective slope length. Mulch is to be anchored by the use of a photodegradable extruded plastic netting and stakes to anchored mulch to ground or with an appropriate tackifier.

2. Hydro Mulch – May be used when specified by the Effective Planting Plan. The Contractor shall follow written recommendation of the Hydro-seeder and the hydro-mulch recommendations are to be on site at all times and available to the Engineering Department at all times. The recommendations shall address the following:

a. Type of soil on slope to be protected
b. Percentage of slope
c. Application rate
d. Maximum wind speed

3. Tackifiers – Tackifiers are defined as being chemical stabilization practices, often referred to as a chemical mulch, soil binder, soil palliative. Chemical stabilization can be used as an identified by the effective Planting Plan. Asphaltic tackifiers are not allowed. The application rates and procedures recommended by the manufacturer of a chemical stabilization product shall be followed to prevent the products from forming ponds and from creating large areas where moisture cannot get through.

4. Blankets - Manufactured blankets have made the process of mulching convenient and cost effective for the developer or builder. Commonly referred to as erosion control blankets, mulch blankets or soil retention blankets, their function is the same.

   a. To provide a convenient and inexpensive method of proving protection to the soil against erosion.
   b. Provide a growing environment for the revegetation process from germination to established growth.

   Due to the wide range of products, erosion and vegetation characteristics the blankets are allowed to be installed when the following conditions are met:

   a. Blankets are used within the parameters of manufacturer recommendations.
   b. Produces a site specific staking or stapling pattern.
   c. Produces acceptable soil loss results based on the Revised Universal Soil Loss Equation for their blanket.
   d. The seed supplier's written recommendation that this is the protection they recommend for the vegetation that is proposed on the site.
   e. The LS factor is satisfied when used on slopes greater than 50 feet.

   The Engineer shall design the work covered under subsection 2.5 to meet the following technical specification section:

   1. Section 02272 – Fabric, Erosion Control Mats and Geotextiles

5. Straw Mulch - Straw mulch is anchored or punched in by using a tracked construction vehicle. Straw mulch is to be applied at a rate of 2 ½ tons per acre.

   The Engineer shall design the work covered under subsection 2.5 and Appendix B to meet the following technical specification section:

   1. Section 02935 – Crimped Straw

3.7 RETAINING WALLS

A. **General** – Where insufficient space is available for construction of a complete slope or where obstacles are in the way, retaining walls may need to be constructed to retain the earth and limit the amount of erosion, which might be experienced. If the wall is 48-inches or greater, the wall is governed by the International Building Code (IBC). Such wall will need to be designed by a licensed civil engineer, registered in the State of Utah.

The Engineer shall design the work covered under subsection 2.5 to meet the following technical specification section:

1. Section 02277 – Segmental Block Retaining Wall
2. Section 04220 – Concrete Unit Masonry

3.8 LANDSCAPE IRRIGATION SYSTEM

A. **General** – In cases where soil erosion control measures are selected by the Developer to meet his project needs, a landscape irrigation system will need to be designed and constructed. The design of such systems shall be done by a licensed landscape architect, registered in the State of Utah and shall be reviewed and approved by the City prior to construction.

The Engineer shall design the work covered under subsection 2.15 and Appendix B to meet the following technical specification section:

1. Section 02811 – Landscape Irrigation System

3.9 CONCRETE STRUCTURES

A. **General** – The design of concrete structures related to grading, erosion and sedimentation control and revegetation shall be performed by a registered civil engineer. The design shall take into account the following technical specifications. Preliminary design and final design shall be reviewed and approved by the City prior to finalizing the projects for construction.

The Engineer shall design the work covered under subsection 2.5 and Appendix B to meet the following technical specification section:

1. Section 03100 A – Concrete Formwork
2. Section 03102 – General Concrete Construction
3. Section 03200 – Reinforcement Steel
4. Section 03300 – Cast-in-Place Concrete
5. Section 03303 – General Concrete
6. Section 03304 – Minor Concrete

3.10 RIPRAP

A. **General** – Riprap is a layer of stone or rock designed to protect and stabilize the surface of the soil from erosion from water or wind. Riprap may be use to stabilize cut and fill slopes, channel slopes and bottoms, inlets and outlets for culverts, bridges, slopes drains and shorelines to due wave action. The thickness of the riprap for slope protection shall be in accordance of section 3.6 Erosion Control.

Riprap is classified as either graded or uniform. Graded riprap includes a wide range of stone or rock sizes. Uniform riprap consists of stone or rocks approximately the same size. Graded riprap is preferred since it provides a dense, flexible cover. Riprap sizes are designed by either the mean diameter or the weight of the stones.

Proper slope selection and surface preparation are essential for successful long-term functioning riprap. Adequate compaction of fill areas and proper use of filter blankets are necessary.

The Engineer shall design the work covered under subsection 2.5 and Appendix B to meet the following technical specification section:

1. Section 02275 – Riprap

3.11 RETENTION/DETENSION BASINS

A. **General** – The design of regional and on-site retention/detention basins shall be performed in accordance with the City's current Storm Drainage and Flood Control Design and Construction Standards, Master Drainage Plan and other pertinent master plans and studies.

The Engineer shall design the work covered under subsection 2.5 and Appendix B to meet the following technical specification section:

1. Section 02292 – Dam Embankment Construction
2. Section 02274 – Clay Liner
3. Section 02710 – Toe Drain
4. Section 11232 – Slide/Stop Gates
5. Section 00000 - Low Flow Pipe

3.12 STORM DRAIN SYSTEM

A. **General** – The design of storm drainage facilities, including pipelines, shall be performed in accordance with the City's current Storm Drainage and Flood Control Design and Construction Standards, master storm water management plan and other pertinent master plans and studies.

The Engineer shall design the work covered under subsection 2.5 and Appendix B to meet the following technical specification section:

1. Section 02712 – Storm Drainage System
2. Section 02750 – Storm Drainage System Testing
3. Section 02606 – Manholes
4. Section 02617 – Reinforced Concrete Pipe
5. Section 02618 – Reinforced Concrete Pressure Pipe
6. Section 11231 – Flap Gates

3.13 PERMANENT SEEDING

A. **General** - This practice will establish perennial and permanent seeding for a site where development is complete or will have no further disturbance. This practice is for an area

that has been brought to final grade within 21 days of initial disturbance and satisfies one of the conditions of the re-vegetation bond.

1. Installation Specifications

   a. Install berms or swells to prevent concentrated flows from adjacent properties.
   b. Prepare seed bed should be granular, loose, uniform grades to 2-4 inches in depth.
   c. Surface Roughing if the rainfall causes the soil surface to become sealed or crusted, loosen it just prior to seeding by discing, harrowing, raking or other suitable methods.
   d. Apply fertilizer as required by existing soil evaluations.
   e. Mulch: The Contractor will obtain a written statement and recommendations from the seed supplier or other knowledgeable entity, comparing the types of vegetation and the type of mulch being used. The seed supplier written statement will specifically address the analysis of the denseness of the blanket with growing characteristics of the proposed seed, i.e. as the seed germinates, the broadleaf plant will cause tenting due to the denseness of the mulch.

2. Seed Mix - The following seeds will be included in the proposed seed mix.

   Sodar Streambank Wheatgrass — Agropyron, riparium

   This a native sod grass of the Northern Great Plains plant growth region and the western intermountain area. It tolerates drought and spreads rapidly to form a good ground cover. It appears early and resembles thick spike wheatgrass. It is used widely as a low-growing, low maintenance cover. This is useful for roadside seeding, recreation areas, disturbed areas, and other sites where a low maintenance turf is desired.

   Nezpar, Indian Ricegrass — Oryzopsis hymenoides

   This grass is dense tufted perennial with upright stems. It is widely distributed over the west where it is one of the most drought-enduring native range grasses. It grows on semi deserts, sand dunes, sandy plains, canyons, hillsides, foothills, exposed ridges, and dry, sandy, rocky, or granulated shale sites. It is one of the first species to become established on disturbed sandy sites. This species has excellent seedling vigor and is easily established. Birds, especially mourning dove and pheasant, and small rodents relish the plump nutritious seeds.

   This is an important bunch grass of the intermountain region. However, the seed is generally available in limited quantities.

   The Engineer shall design the work covered under subsection 2.5 and Appendix B to meet the following technical specification section:

   1. Section 02933 – Seeding

SECTION 4.0

PLAN PREPARATION

4.1 GENERAL

The Engineering Department has established procedures, which must be followed in the preparation of engineering drawings and other plans. Deviations from these requirements, unless specifically authorized, will be cause for rejection by the Engineering Department. All engineers preparing plans should have in their possession a complete set of these Standards. All work shall be in ink on mylar sheets and digital copies of this work will be provided to the Engineering Department upon completion of the project. All projects constructed in the City will conform to these Standards.

The engineer has a distinct responsibility to follow the progress of the work and to submit change orders to the drawings and to incorporate "as-built" information on the drawings.

It should be understood that the responsibility for accuracy and completeness of the drawings rests with the developer's engineer. By signing the drawings, the City Engineer attests to the fact that they have been reviewed by the City and that the Planning Commission has authorized construction. By signing the drawings the City Engineer does not replace the professional liability of the professional engineer who prepared the drawings. The professional engineer who has prepared the studies, design, and drawings associated with this work is to sign and stamp these documents as required by State law.

4.2 PLAN PREPARATION RESPONSIBILITY

Refer to subsection 1-1 and 2.1.B. Design Professionals Qualifications for this information.

4.3 SHEET SIZE AND MARGINS

Overall dimensions of each sheet are 24x36-inches. Margins are to be 2-inches on left, all others ½ - inch.

4.4 SIGNATURE BLOCKS

All sheets of the drawings shall have a approved signature blocks. The approval blocks shall be signed before any construction occurs. Any changes to the plans after initial approval shall be shown as revisions and are required to be approved by the City Engineer.

4.5 COVER SHEET

This shall be the first sheet in the set and shall contain:

A. **Index Map**. An index map with an overall plan at a scale of one inch = 300 feet showing general layout of work, named streets, subdivision boundaries, lot boundaries and numbers, a sheet index and other pertinent information. Care must be exercised to make sure scale and orientation are correct since these index maps are used in the City's geographical information system for other purposes.

B. **Vicinity Map**. A vicinity map with a scale of one inch = 1,000 feet showing subdivision boundary, streets, adjacent subdivisions, major streets outside of subdivision boundaries and the location of the bench mark.

C. **Bench Marks**. All bench marks used in the project shall be graphically shown on this sheet and the elevations, descriptions, locations, etc., spelled out as illustrated below:

B.M. No._____ Elev. _____F.B. _____Page_____

Type of Marker_____

Location_____

All elevations used in preparation of standard plans shall be based on Salt Lake County Surveyor's Office information.

D. **General Notes.** The general notes shall be shown on the cover sheet and need not be shown on the other sheets. The general notes shall include a note requiring compliance with these standards and 5 day notice prior to a preconstruction meeting and before beginning construction (see Section 4.11). Land disturbance notes are to appear on the grading plan. In some instances the land disturbance general notes may appear on a separate sheet. In these instances the grading plan will reference the general notes with lettering not less than 18 points and the sheets will have similar and consecutive numbering, starting with "G" i.e. For general notes refer to Sheet G-1 of G-4

E. **As-built Materials List** - On the cover sheet shall be a block to be used for as-built information. It shall be as follows:

MATERIAL LIST

Item	Supplier and/or Manufacturer	Model/ Type No.	No.

Prior to submittal of as-built drawings, the developer's engineer shall complete the pertinent information.

"As-built" certification is also required. The wording shall be as follows:

"AS-BUILT" CERTIFICATE

I hereby certify that the work shown on Drawing Number _____Sheet _____ through _____inclusive, marked "as-built" has been constructed in conformance with lines and grades as shown on said plans and referred specifications.

_____ _____

Registered Civil Engineer RCE No. Date

G. **City Engineer's Certification for Approval to Construct.** Appropriate designation for City Engineer approval to construct, located above title block (number and date to be completed by the Engineering Department).

Approved for Construction _____ Date_____

City Engineer

4.6 GRADING AND SEDIMENT CONTROL PLAN

A. **General** – Grading plans are to be submitted for review, prior to disturbance of land or vegetation. The City will issue a letter to proceed when the plans conform to the specifications herein. Specifications herein are to be considered minimum. During the review process the City could require additional information prior to issuing the letter to proceed.

The minimum submittal will consist of:

1. A plan review of the site.
2. Two sections through the grading project on the X and Y axis with details as required.
3. The dust control plan as required by the State of Utah, Department of Environmental Quality, Division of Air Quality is to be submitted as a separate drawings meeting the state's requirements.
4. A wet weather plan is required showing additional BMP's that will mitigate the affects of the wet weather on/to adjacent facilities. The intent is to keep streets, storm drains, and existing waterways free of sediment.
5. Detail sheets contain the proposed BMP's on the site. The details are to provide specific and detailed installation instructions to the Contractor to install said BMP's. The general description per manufacturer recommendations is not adequate or acceptable. The BMP's selection is to be flexible and addressed as the project proceeds and site conditions change.

B. **Plan View** – Show and identify the following:

1. The layout of the subdivision including streets, lot line easement lines, drainage channels, and under ground drainage systems. The layout is to be seen as a background (50%).
2. Existing contours including topographic features including but not limited to existing drainage channels, roads, and structures. Contours to be labeled with numeric elevations on a maximum of ten-foot intervals and shown as dashed lines. The City Engineer may change the required interval based on the slope of the property.

3. Finished contours of all proposed topographic features. Finished contours are to be more distinct than existing elevations. Contours to be labeled with numeric elevations on ten-foot intervals and shown as solid lines. The City Engineer may change the required interval based on the slope of the property.
4. Show area Limits of disturbance (LOD).
5. Indicated LOD barrier material, i.e. concrete Jersey barrier or silt fence.
6. Show construction phasing limits.
7. Show timetable construction phasing. Chart form is acceptable.

Example:

Phase	Start	Finish
1	May 15, 2006	September 2006
2	August 22, 2006	December 2006
3	March 1, 2007	September 2007

8. Identify areas in which the majority of the lot has been created with fill dirt.
9. Topsoil storage area(s), containment, and erosion control methods.
10. Retaining walls
11. Sediment BMPs satisfying the intent of retaining soil on the site and out of the streets, existing waterways, storm drain, including dust control 24 hours and seven days per week. Identify type and location of sediment control BMPs in two locations.

    a. The plan view
    b. In a chart on the same sheet as the plan view

Example:

Sediment Control BMP	Identification	Location of BMP	Site Condition
Silt Fence	SF – 1	South side of property	Bottom of Slope
Construction Entrance	CE – 1	North end of property	Adjacent

12. Show locations and direction of flows of existing and proposed swales, water courses, canals, ditches, springs, wells, culverts, storm drains, and storm water facilities. BMP are to be shown in the plan view and in chart form.
13. Show existing and proposed easements and ownership of said easements on residential lots.
14. Show location of any designated flood plains and/or wetland boundaries.
15. Show the staging area and BMP to control chemical and fuel spills.
16. Provide a minimum of two sections through property, one through the x-axis and one through the y-axis. Additional sections are required when:

    a. Cuts or fills over six feet.
    b. Identify locations of sensitive areas, i.e. wetlands or natural drainage courses that will be affected by the proposed grading.

17. Identify the dust control to be used 24 hours a day, seven days per week.
18. Location of concrete vehicle wash out area.
19. The calculation of amount of soil is being moved. This calculation is inclusive of imported, exported, or material used to balance the site. If the soil is being moved, dug, excavated, imported or exported, the calculation should reflect the same.
20. The existing and finish grades expressed in percent to be shown in the respective areas. Existing or finished grades over 30% will be distinctively shaded.
21. Survey Section indicators shown with corresponding sheet numbers.
22. General Notes to appear on Grading Plan.

    a. Contractor should perform earthwork in accordance with the City of South Jordan Land Disturbance Ordinance, the City's Standard Specifications, City of South Jordan Land Disturbance Design and Construction Standards, erosion, sediment, re-vegetation requirements, and the dust control plan as required by the State of Utah, Department of Environmental Quality, Division of Air Quality.
    b. The Contractor will perform earthwork in accordance with technical specifications outlined in the Land Disturbance Design and Construction Standards and the recommended earthwork specifications found in the report of geotechnical engineer, and the geotechnical investigation. In the event there is a conflict between the documents mentioned herein and City of South Jordan's erosion and sediment control requirements or the dust control plan as required by the State of Utah Department of Environmental Quality, Division of Air Quality, City of South Jordan's requirements and the State requirements will control.
    c. The sequence of construction is to be followed.
    d. Sedimentation BMP's shown on the erosion control and sediment control plans to be installed within the same working day the land disturbance occurs.
    e. Dust control BMP's are to be on site and implemented as soon as land disturbance occurs. The dust control as required by the State of Utah air quality plan is to be submitted with the grading plan as a separate drawing.
    f. All areas to be re-vegetated are to receive re-vegetation BMP's within 21 days of disturbance.
    g. If the existing grade is different from what is shown on this grading plan, stop work and contact the City of South Jordan, Engineering Department. Work is to remain stopped until the City's Engineering Department provides a written notice to resume work.
    h. The project owner is responsible for maintaining the streets, storm drains, and channels, ditches and swales free from debris, soil, mud, or other material that would cause a public safety concern, violate the City's UPDES permit, state or federal laws, or prevent the facility from operating.
    i. All concrete trucks are to use the designated washout area(s). Failure to comply will result in a work stop and the offender could be guilty of a Class C misdemeanor.

j. L.O.D. barriers are to be in place and maintained until written notification is received from the Engineering Department. The owner is responsible for maintaining L.O.D. barriers.

k. If disturbance occurs outside the L.O.D. work will stop and remain stopped until the written response is received from the City.

l. The owner is to be responsible for additional grading information as required throughout the remainder of the project.

C. **Grading Plan Sections**

1. Sections to be drawn to the scales indicated see Section 4.7. The profile to be displayed on an X and Y grid background.
2. Section to show existing grades, finished grade, property lines and drainage features.

4.7 EROSION CONTROL AND REVEGETATION PLAN

A. **General** - An erosion control plan is required for all land disturbances including but not limited to pioneering roads, residential subdivisions, commercial projects/subdivisions, temporary and permanent construction, roads and utilities.

The erosion control plan must be prepared and approved before final approval and before construction begins. The erosion control plan shall be submitted with the grading plan as required by local ordinances or be prepared as part of the storm water pollution prevention plan (SWPPP).

If the grading permit allows work to be done during the wet weather season, the permit may require a wet weather operating and erosion control plan. This plan must be approved prior to the commencement of any work and include all necessary temporary and permanent erosion control measures, including those to be followed should the work stop at any time during the wet weather season.

If the site or portion of the site is planned to be idle for more than 45-days, then vegetative stabilization must be accomplished within 7-days. The wet weather plan must include a plan for the immediate (within 24-hours of the first forecast of a storm front) installation of emergency erosion control measures.

B. **Guidelines for Erosion Control Plans** - The plan will consist of three parts:

1. A narrative, containing:

a. A brief description of the proposed land-disturbing activities, existing site conditions, and adjacent areas (such as creeks and buildings) that might be affected by the proposed clearing and grading;

b. A description of critical areas on the site - areas that have a potential for serious erosion problems, including the name, location and aerial extent of moderate and highly erodible soils and slopes on the project site;

c. The date grading will begin and the expected date of stabilization;

d. A brief description of the measures that will be used to control erosion and sedimentation on the site;

e. When these measures will be implemented;

f. A description of an inspection and maintenance program, with provisions for frequency of inspection, reseeding, repair and reconstruction of damaged structures, cleanout and disposal of trapped sediment, duration of maintenance program, and final disposition of the measures when site work is complete.

2. A map showing:

   a. Existing site contours at an interval and scale sufficient for distinguishing runoff patterns before and after disturbance;
   b. Final contours;
   c. A legend, if necessary;
   d. Limits of clearing and grading;
   e. Existing vegetation, such as grassy areas or vegetative buffers, that may reduce erosion or off-site sedimentation;
   f. Critical areas within or near the project site, such as streams, lakes, wetlands, or the aerial extent of erodible soils;
   g. The location and types of erosion and sediment control measures, including vegetative treatment used.

3. Plan details, including:

   a. Detailed drawings of erosion and sediment control structures and measures, showing dimensions, materials, and other important details;
   b. Design criteria and calculations such as design particle size for sediment basins and peak discharge for channel design and outlets;
   c. Seeding or vegetative specifications;
   d. Inspection and maintenance notes.
   e. Specification for surface roughing.

   The narrative and details should be placed on the erosion control plan map if possible.

C. **Plan Check** - The following items provide a general approach and guidelines that a review agency or plan checker might find useful:

1. Responsibility: It is not the responsibility of the plan reviewer to ensure that the plan is appropriate for the level of work suggested by the proposed project. The reviewer can only ensure that the plan meets the minimum standards set by the reviewing agency and its authorizing ordinance.
2. Communications: Encourage informal communications between the plan reviewer and the plan preparer. This will enable the reviewer to make informal suggestions that may save the developer money and the preparer time, and it may result in a better, more effective plan. It will also enable the preparer to explain and justify the plan.
3. Incomplete Plans: Do not review seriously incomplete plans. Send them back with a request for the missing information.
4. Required Information: Make sure all the required information has been submitted. A checklist can be used by both plan reviewers and plan preparers, however, checklists can encourage laziness. Having everything checked off does not necessarily mean that everything is in order.

5. Plan Concept: The concept should be examined first, starting with the general and moving to the specific. Does the plan make sense?
6. Schedule: Examine the construction schedule. Will grading be completed before the wet weather season or before the summer thunderstorm months? When will storm drainage facilities, paving, and utilities be installed in reference to the wet weather season? If grading will take place during months when there is a high probability of heavy rains, what extra precautions will be taken to protect against erosion, sedimentation, and changing drainage patterns (Is a wet weather plan necessary)?
7. Minimize Disturbance: Does the plan show areas that are not to be disturbed? If possible, native vegetation should be retained and stream buffer areas should be designated on the plan and flagged in the field. A well-conceived erosion control plan will minimize erosion by attempting to minimize disturbance and retain natural vegetation. A phased approach to development can assure that the extent and timing of grading does not exceed the contractors ability to perform erosion and sediment control.
8. Site Drainage: Make sure you understand where all drainage comes from on and above the site, where it goes, and how it traverses the site. For large sites, require or prepare a drainage area map. If drainage patterns are unclear, ask for clarification.
9. Sediment Basins and Traps: Locate all sediment basins and traps and define their tributary areas.
10. Erosion Control: Check the method used to prevent erosion. Hydraulic seeding and mulching may adequately stabilize some areas, but other areas, because of their proximity to sensitive features such as watercourses, or their steepness and erosive soil, may need far more intensive re-vegetation efforts. On steep and critical slopes, a reliable backup system for hydraulic planting, such as punched straw, bonded fiber matrix, or erosion control blankets is strongly recommended.
11. Channels and Outlets: Examine all drainage-ways where concentrated flows will occur. Be sure adequate erosion protection is provided both along channels and at channel and pipe outlets. Check the sources of runoff to be sure that all the runoff comes from undisturbed or stabilized areas or has been desilted by sediment basins or other sediment retention devices.
12. Miscellaneous: Look for haul roads, stockpile areas, and borrow areas. They are often overlooked and can have a substantial effect on drainage patterns. Have construction or access roads been surfaced with rock, as a minimum treatment, before the rainy season? Look at all points of vehicle access to the site and be sure mud and soil will not be tracked onto paved streets and that sediment-laden runoff will not escape from the site at these points. Pay particular attention to watercourses and their protection.
13. Plan Details: Once the plan concept has been shown to be adequate, check the details to be sure the concept is adequately described in the plans.
14. Structural Details: Be sure that sufficiently detailed drawings of each structure (sediment basin, dike, ditch, silt fence, etc.) are included so there is no doubt about location, dimensions, or method of construction.
15. Calculations: Determine if calculations have been submitted to support the capacity and structural integrity of all structures. Were the calculations made correctly? Non-engineered structures, such as straw bale barriers, do not generally need hydrologic calculations, however, supporting information such as drainage area and peak flow should be available if requested.

16. Vegetation: Review seed, fertilizer, and mulch specifications. Check quantities and methods of application to be sure they are appropriate and consistent with local guidelines. Are there stipulations so that ineffective re-vegetation and/or damage can be remedied immediately?
17. Maintenance: Be sure that general maintenance requirements and, where necessary, specific maintenance criteria, such as the frequency of sediment basin cleaning, are included. Are there stockpiles of spare materials (filter fabric, straw bales, stakes, gravel, etc.) to repair damaged control measures? Routine maintenance inspections should be part of the plans.
18. Contingencies: The plan must provide for unforeseen field conditions, scheduling delays, and other situations that may affect the assumed conditions. For example, straw mulch may need to be installed as an emergency measure during severe summer thunderstorms, or sediment basins may need to be cleaned more frequently.
19. Technical Review: Where applicable, the erosion and sediment control plan should be reviewed by the soils, certified professional in erosion and sediment control (CPESC), or geotechnical consultant for the project.
20. Signature: Where applicable, the erosion and sediment control plan should be signed by the preparer who shall be a qualified professional.

4.8 GRAPHIC SCALES AND NORTH ARROW

All plan and profile sheets shall contain:

A. A graphic scale, horizontal as well as vertical, illustrated such that a true representation is produced when the plans are reduced in size, and they shall be as follows:

Horizontal 1inch = 40 feet
Vertical 1inch = 10 feet *

*Double scale drawings (i.e., 1inch = 8 feet) may only be submitted where the predominant slope of the existing ground surface or any one sheet exceeds 15 percent. In such cases, the words "Double Scale" shall be boldly shown.

B. A north arrow oriented toward the top or to the right only, or as approved. Generally, north shall be oriented towards the top or right hand side of the sheet.

4.9 PROCEDURE FOR APPROVAL

Approval for improvement plans consists of two phases. Each phase consists of a series of requirements, which must be met before final acceptance.

A. Requirements for authorization of construction (see Section 5 of these Standards).

B. Requirements for final acceptance (see Section 11 of these Standards).

4.10 PLAN CHECKING LIST

The following list is intended as a guideline to assist the preparer; it is not represented to be a complete list of requirements.

Check List
Plan Checking and Project Requirements
Grading

Cover Sheet.

- Standard size, title block, signature block. Revision and engineer's block
- Key and vicinity map
- Include lot numbers and lot lines. Sheet index
- Adjacent subdivisions and street layout
- Bench mark
- Design and as-built certificates
- General notes
- Blue stake alert note.
- Engineer's stamp and expiration date

General Design

- Conform to master plans
- Check for right of way and easements
- Compliance with other utility company requirements
- Check for existing irrigation canals
- Check for compliance with City's surveying monumentation

Grading and Sediment Control Plan Submittal

- A plan view of the site
- Screened background layout of project
- Existing contours (screened)
- Finished contours shown and labeled
- L.O.D. shown, material identified and labeled
- Indicate construction phase lines
- Time table chart of phasing
- Areas with fills over four feet
- Topsoil storage areas shown and identified
- Sediment BMP shown on plan view sheet and in chart
- Existing drainage features
- Existing wetlands identified
- Show staging area and provide details
- Two sections through the grading project on the x and y axis details
- Dust control plan on separate sheet
- Wet weather plan using BMP
- Concrete washout area

Plan & Profile Sheets

- Graphic scales
- North arrows
- Roadway stationing left to right

- Elevations of centerline of roadway, curb and gutter on each side
- Proper burial
- Curve data if there are curves
- Street, curb dimensions, street names
- Lot boundaries
- Easements including line bearings
- Angle points - show deflection angle right or left moving up station

Administrative Before Construction of Main(s)

- Cost estimate
- Inspection and engineering review fee. Bonds and insurance.
- SWPP & Notice of Intent

Administrative During or After Construction to Main(s)

- Change Order Fee
- Meter installation requests

Check List
Plan Checking and Project Requirements
Erosion, Revegetation and Sedimentation

The following checklist is provided to help the plan preparer and reviewer make sure that all the necessary elements of a comprehensive plan have been addressed.

Narrative

Project description: A brief description of the nature and purpose of the land-disturbing activity and the amount of grading involved.
Existing site conditions: A description of the existing topography, vegetation, and drainage.

Adjacent areas: A description of neighboring areas, such as streams, lakes, residential areas, and roads that might be affected by the land disturbance.
Soils: A brief description of the soils on the site including erodibility and particle size distribution (texture).
Critical areas: A description of areas within the developed site that have potential for serious erosion or sediment problems.
Erosion and sediment control measures: A description of the methods that will be used to control erosion and sediment on the site. Temporary erosion control, and temporary sediment control measures. Who will be responsible for implementation? Financial guarantees may be required to assure proper implementation
Permanent stabilization: A brief description of how the site will be stabilized after construction is completed.
Maintenance: A schedule of regular inspections and repairs of erosion and sediment control structures, and the person responsible for maintenance.

Maps

The following information should appear on one or more maps:

Existing contours: Existing elevation contours of the site at an interval sufficient to determine drainage patterns.
Preliminary and final contours: Proposed changes in the existing elevation contours for each stage of grading.
Soils: Boundaries of the different soil types within the proposed development.
Existing vegetation: Locations of trees, shrubs, grass, and unique vegetation.
North arrow
Vicinity Map
Critical areas: Areas within or near the proposed development with potential for serious erosion or sediment problems.
Existing and final drainage patterns: A map showing the dividing lines and the direction of flow for the different drainage areas before and after development, and how well off-site water passes through the site without contamination.
Limits of clearing and grading: A line showing the areas to be disturbed, and proposed buffer-strips.
Erosion and sediment control measures: Locations, names, and dimensions of the proposed temporary and permanent erosion and sediment control measures.
Storm drainage system: Location of permanent storm drain inlets, pipes, outlets, and other permanent drainage facilities (swales, waterways, etc.), and sizes of pipes and channels.

Details

Detailed drawings: Enlarged, dimensioned, and typical drawings of Best Management Practices such as erosion control blankets, energy dissipators, grass-lined channels, and sediment barriers.
Seeding and mulching specifications: Seeding dates, seeding and mulching rates in pounds per acre, and application procedures.
Maintenance program: Inspection schedule, spare materials needed, stockpile locations, and instructions for sediment removal and disposal and for repair of damaged structures.
Master Plans – Check master plans to ensure compliance of project with the City's most current master plan(s).

Calculations

Calculations and assumptions: Data for design storm used to size pipes and channels and sediment basins and traps, design particle size for sediment trap efficiencies, basin discharge rates, size and strength characteristics for filter fabric, wire mesh, fence posts, etc., and other calculations necessary to support drainage, erosion, and sediment control systems.
Attachments: The erosion control plan should accompany the grading plan.

4.11 STANDARD LANGUAGE FOR DEDICATION OF FACILITIES TO CITY

Please refer to current city's policy and standards with the approval of the City Engineer and the City Attorney.

4.12 STANDARD NOTES

The standard notes shown on the following page(s) should be included on the cover sheet as applicable. They are subject to change to suit the needs of the Engineering Department.

GENERAL GRADING NOTES

1. Contractor shall notify City of South Jordan Engineering Department at (801) 254-3742 five business days prior to commencing construction so that a preconstruction meeting can be scheduled.

2. All construction shall conform to City of South Jordan's Land Disturbance Design and Construction Standards as adopted and amended.

3. The contractor shall contact Blue Stakes (801.208-2100) or (811) for marking of existing utilities prior to performing any excavation. Call for underground locating two working days prior to any excavation.

4. Contractor shall perform earthwork in accordance with City of South Jordan Standard Specifications, Land Disturbance Design and Construction Standards and the recommended earthwork specifications found in the report of geotechnical investigation dated
_____, 20____ by _____.

5. The existing topography shown on these plans is based on aerial topographic mapping performed by _____ for _____ dated _____, 20 _____.

6. The Owner shall provide an erosion control plan and obtain all permits required by the City of South Jordan, Salt Lake County, and the State of Utah for erosion control. The Contactor shall be solely responsible to provide all temporary erosion control and maintenance, and shall provide erosion and sediment control forms to the City. For additional erosion control information, see 'Erosion Control/Re-vegetation Plan' sheets. See section 4.7.
7. Subsurface investigations have been conducted at the site of the work. Copies of the soils report may be obtained at the office of _____. Soils investigations were conducted for design purposes only and the data shown in the reports are for subsurface conditions found at the time of the investigation. The Owner and Engineer disclaim responsibility for the interpretation by the Contractor of data, such as projection or soil bearing values and profiles, soil stability and the presence, level and extent of underground water for subsurface conditions during construction operations.

4. CAUTION: Only City of South Jordan Public Works Department personnel are to operate any valves on the culinary water system.

GENERAL EROSION, REVEGETATION AND SEDIMENTATION NOTES

1. Contractor shall notify City of South Jordan Engineering Department at (801) 254-3742 five days prior to commencing construction so that a preconstruction meeting can be scheduled.

2. All construction shall conform to City of South Jordan's Land Disturbance Ordinance and Land Disturbance Design & Construction Standards as adopted and amended.

3. The contractor shall contact Blue Stakes (801.208-2100) or 811 for marking of existing utilities prior to performing any excavation. Call for underground locating two working days prior to any excavation.

SECTION 5.0

FEES, CHARGES AND REQUIREMENTS FOR AUTHORIZATION OF CONSTRUCTION

5.1 GENERAL

The authority for fees/charges is generally established in the City of South Jordan Municipal Code. Specific fee/charge amounts are adopted by City Council Resolution and are generally updated by resolution on a yearly basis. All fee/charge amounts are adopted following the conducting of public hearings by the City Council as required by law. Copies of the current documents are available from the City Recorders Office.

5.2 SUBMITTAL OF PRINTS (PLAN CHECK)

The Developer is responsible for submitting two sets of the prints of the proposed roadway improvements and one copy of the final subdivision plat, where appropriate to the Engineering Department. Plans illustrating an incomplete design and drafting detail may not meet minimum standards and may be just cause for a rejection of the first plan check. The developer or developer's engineer shall submit preliminary plans completed in accordance with these standards. The developer and the developer's engineer should be aware that most projects involve several plan check/ submittals before the drawings are deemed to be in satisfactory condition.

5.3 LAND DISTURBANCE PERMIT APPLICATION FEE

Land disturbance activities, which require a Land Disturbance permit as defined in Title 16.44 – Land Disturbance Ordinance are required to file and pay the fee associated with this permit.

5.4 SPECIAL PROVISIONS

If there are unusual conditions which would require substantial deviation from the City's Land Disturbance Design and Construction Standards, particularly with respect to other sensitive lands, such deviations are to be submitted in writing prior to preliminary plat review and/or development project approval, or in any case prior to submittal of the first plan check.

5.5 EASEMENTS

Any easements necessary must have deeds submitted for checking at this time or must be shown on the subdivision plat before recordation

5.6 AGREEMENTS, BONDS, AND INSURANCE CERTIFICATES

City staff will provide the developer with the proper forms and developer shall submit the following:

A. **Insurance Policy Certificates.** Insurance certificate with limits as stated in the "Agreement". Attention is particularly called to the City's requirements concerning submittal of an "Accord" form. The insurance certificate shall include general liability, auto liability and worker's compensation insurance in amounts as required by the Engineering Department or City Attorney. The City, its officers, employees and agents,

shall be named as additional insureds. The notice of cancellation period must be no less than 60 days. Any reference in the cancellation clause to "endeavor to" or "but failure to mail such notice shall impose no obligation or liability of any kind upon the company" must be deleted. Also, the words "This certificate is issued as a matter of information only and confers no rights on the certificate hold" must be deleted. If disclaimers cannot be deleted from the Accord form, then a signed warranty letter must be attached to the certificate.

B. **City's Accord Form.** The City reserves the right to request that the City's Accord form be utilized.

C. **Performance Bond.** Security is required to pay for stabilization of the site should work be abandoned or stopped before construction is completed. The Engineering Department and City Attorney's office will determine the amount and form of the security and of the form approved by the City Attorney's office. When an agency of the State, federal, or local government provides at least 20-percent of the financing for the project, an instrument of credit from that agency is acceptable.

1. Form – The security can be one of the following:

   a. Bond by a duly authorized corporate surety, or
   b. Letter of credit
   c. Escrow
   d. Cash

2. Amount – The amount of security shall be the full cost of erosion and sedimentation control measures for the project. The estimate of this cost shall be prepared by the developer, and reviewed and approved by the Engineering Department. The City reserves the right to change the estimated amount required.

3. Release – The security will be released upon issuance of a certificate of completion or upon voluntary relinquishment of the permit, provided provisions of the Land Disturbance Ordinance have been complied with and no administrative or legal action against such security has commenced.

D. **Payment Bond**. A Payment Bond (Labor and Materials) in triplicate and notarized, equivalent to the estimated cost based upon the City's most current Resolution.

5.7 APPROVAL FOR CONSTRUCTION

In any Land Use Zone, except Planned Community Zone, upon receipt of all documents, bonds, fees and checking for all documents, bonds and fees, the staff shall prepare a memorandum to the City's Planning indicating the Engineering Division's concerns have been addressed and the project is ready for City Council or Planning Commission action, from an Engineering Department perspective. City Engineer or designee may waive the requirement of obtaining final site plan or final subdivision plat approval as is deemed appropriate for a particular project. City Engineer may require a letter of indemnification as part of that approval.

In any Land Use Zone, except Planned Community Zone, prior to approval by the Planning Commission, the developer/developer's engineer will submit four (4) sets of final drawings (blue line prints) to the Engineering Department to be stamped "Approved for Construction", once the

Planning Commission approves the project. The Engineering Department will sign the original plans only after approval by the Planning Commission, and will notify the developer's engineer that the plans are signed and available. These prints will be stamped "Approved for Construction" on each sheet and one set will be returned to the developer, which must be kept by the contractor on the project site at all times. The other three sets will be distributed to: one (1) to the Engineering inspector, one (1) to the City's project engineer, and one (1) to the permanent Engineering Department file. No work is permitted which is not shown on these approved plans, except minor field changes approved by the Engineering inspector, until a change order has been processed by the Engineering Department and new "Approved for Construction" sheet(s) is (are) issued. The original drawings will be returned to the developer's engineer until they are "as-built", at which time the originals become the City's property. City Engineer or designee may waive the requirement of obtaining final site plan or final subdivision plat approval as is deemed appropriate for a particular project. City Engineer may require a letter of indemnification as part of that approval.

No person, developer, builder, contractor in a Planned Community Zone shall cause to be commenced or commence land disturbance, grading, relocation, or any other land disturbance activity. No person shall import or export any earth materials to or from any site or within the site, without first obtaining a land disturbance permit. No land disturbance permit shall be issued for any site or project within a Planned Community Zone without City approved land disturbance or grading plans. the developer/developer's engineer will submit four (4) sets of final drawings (blue line prints) to the Engineering Department to be stamped "Approved for Construction", once the Planning Commission approves the project. The Engineering Department will sign the original plans only after approval by the Planning Commission, and will notify the developer's engineer that the plans are signed and available. These prints will be stamped "Approved for Construction" on each sheet and one set will be returned to the developer, which must be kept by the contractor on the project site at all times. The other three sets will be distributed to: one (1) to the Engineering inspector, one (1) to the City's project engineer, and one (1) to the permanent Engineering Department file. No work is permitted which is not shown on these approved plans, except minor field changes approved by the Engineering inspector, until a change order has been processed by the Engineering Department and new "Approved for Construction" sheet(s) is (are) issued. The original drawings will be returned to the developer's engineer until they are "as-built", at which time the originals become the City's property.

No construction is to occur before the plans are signed and before the proper five day Engineering Department notification has been given. This notification will allow time for a preconstruction meeting with all interested parties.

The Engineering Department and the developer have a direct relationship via the documents outlined above. Therefore, to the extent possible, correspondence and verbal communication are to be between these parties rather than between the Engineering Department and the contractor or subcontractors where the developer is excluded. In some instances, when the developer or his representative is not available, a work stop order could be placed on the project until the developer; makes himself available.

5.8 SPECIAL CHARGES

If there are items requiring special approval, the Engineering Department may require deposition of funds or agreements for funds in the future, to provide for operation and maintenance of an

extended re-vegetation plan i.e., the planting of seedlings in a deep fill area. Review of this work by the Engineering Department will be charged per Council Resolution.

SECTION 6.0

CONSTRUCTION STAKING

6.1 GENERAL REQUIREMENTS

Construction staking is the responsibility of the developer, his engineer or contractor. When the term 'construction staking' is used, it should be remembered that it encompasses construction roadway, pioneering roads, limits of disturbance, which may not involve any staking, such as survey flagging to be used in heavy vegetated areas. Stakes or marks will be set at no greater interval than 50-feet on straight alignments, in 3o-percent and greater slope areas, staking or flagging will be based on the principle of line-of-site as required by the Engineering Department.

The actual installation of construction stakes or flagging is to be preformed to minimize the disturbance of vegetation, existing grade and other sensitive geological and environmental features.

The information contained on the construction stake shall clearly indicated station, station description, existing grade, finished grade, amount of cut or fill, offsets, and setbacks.

6.2 PRESERVATION OF STAKES

Construction stakes or construction markings shall be carefully preserved by the contractor until after the staking or flagging can be reviewed and approved by the City. If two or more consecutive stakes are knocked out during construction, new stakes shall be set at the contractor's expense.

6.3 "AS-BUILT DRAWINGS"

The stationing and staking adjustments due to field conditions should be shown on as built drawings.

SECTION 7.0

CONSTRUCTION

7.1 GENERAL REQUIREMENTS

This section describes the use of materials and workmanship to be employed in any land disturbance including but not limited to residential building sites, commercial site, parks, subdivisions, as well as City projects. The developer/ engineer shall prepare such general and special specifications as are necessary to define the nature and location of the work, contractual arrangements, payment for work and any other matters concerning the owner or his contractor; these items are not discussed within the standards presented here.

A. **Use of this Section** - The construction section is intended to highlight the features of construction, which are deemed to be most significant. In any construction activity, when there is a conflict between the recommendations of the manufacturer of a product, and the specifications herein and/or county, state or federal regulations the more stringent, should apply.

   Finally, Section 3.0 of these Standards contains material descriptions and the developer/contractor should use that section along with this section and the respective plates as a reference. Section 9.0 describes testing procedures and requirements.

B. **Quality of Materials** - Materials and equipment to be incorporated into the work shall be new and meet quality control standards of the manufacturer, no seconds allowed on the project. In case a reference is not clear as to which of several available grades is desired, the highest quality material shall be used. When construction bids are received directly by the City such bids shall show the proposed pipe material and the manufacturer's name, if more than one type is allowed.

   The Contractor shall have at the job site certified copies of factory or laboratory test reports showing the strength characteristics of any materials used in the work. For all reinforced concrete work, the contractor shall furnish in advance of pouring concrete and, if requested, the mix design and calculated concrete strength as prepared by the concrete supplier.

C. **Substitutions** - Where articles or materials are specified by brand or trade name, alternate materials or articles equal to those specified may be approved provided the request for approval is in writing accompanied by supporting data, in ample time to permit investigations without delaying the work, based on the following:

   1. The alternate product documentation performance typical of the site-specific design parameters. Documentation of similar products will not be accepted. The intent is to have the design parameters be the controlling factors in specifying a product. It is the sole responsibility of the manufacturer to work with the design engineer and/or to determine the design parameters.

   2. On projects that the City has a financial interest, all alternate product submittals shall include a value engineering cost analysis.

Unless substitutions have received prior to approval, no deviation from the Standards will be allowed.

D. **Quality of Workmanship** - All work will be done by persons experienced in the specific work, under competent supervision and in a first class manner to the City's complete satisfaction. When work is being done directly for the City, the contractor in the proposal shall name each subcontractor and no substitutions will be permitted without prior approval.

E. **Defective Work**

- Site Work - Any defective materials or workmanship, which shall become evident within one year after field acceptance of completed work shall be replaced or repaired without cost to the City. Refusal of the contractor to correct defective work, which is clearly his responsibility, will be considered just cause for exclusion from performing future work for the City. Such exclusion does not impair the City's right to bring legal action to correct the deficiencies as well as to withhold release/exoneration of cash/letter of credit bond and payment bond.
- Sediment Controls – Any defective materials or workmanship, which shall become evident, is to be replaced or repaired without cost to the City immediately. Refusal of the contractor to correct defective work, which is clearly his responsibility, will be considered just cause for exclusion form performing future work for and/or in the City. Such exclusion does not impair the City's right to bring legal action to correct the deficiencies as will as to withhold release/exoneration of cash/letter or credit bond and payment bond.
- Re-vegetation – Defective work shall be governed by the prescheduled release dates of the re-vegetation bond as described in Resolution 97-73. All damage resulting from the contractor's refusal to repair the defective work will be the sole responsibility of the contractor of the owner.

F. **City Inspection, Field Acceptance and Guarantee** Period - The developer's engineer is responsible for the daily inspections and submitting inspection forms, compaction data and other City required information. The developer's engineer is to notify the Engineering Department a minimum of 24 hours before final inspection is requested. The Engineering Department has the responsibility to respond in a timely manner, which is considered fair and responsible, but within five working days or request.

The Engineering Department is responsible for all final acceptance inspections of all grading, sediment control, erosion control and revegetation work. All such work shall be available for City observations and comments at all times. It will be the contractor's responsibility to provide a working day's notice to the Engineering Department prior to the start of any work. Scheduling a preconstruction meeting requires a minimum of five working days. Failure to provide proper notification may delay the preconstruction meeting and the starting date of the project since the Engineering Department may not be able to inspect the work and cannot accept any work for which a preconstruction meeting and/or inspection has not been arranged. It must be emphasized that the primary responsibility for compliance with all City requirements and standards rests with the developer. Any acceptance of a portion of the work by a construction inspector does not relieve the developer of this basic responsibility.

Field acceptance is made by the inspector; however, the 18-month guarantee period for all work shall begin as of City Engineer acceptance. As mentioned in Section 7.I.E., any deflective site work or grading work discovered during this period shall be repaired or replaced but a new 18-month period will not begin for the corrected work.

All holiday or weekend inspection will be subject to additional charges as detailed in the City's standard rates for such work.

G. **Public Relations** - The contractor shall conduct its affairs in a manner that will lessen the disturbance to residents in the vicinity of the work. In this regard, standard working hours as specified in the Municipal shall be observed unless prior approval is received, which also includes City observed holidays. The job site shall be maintained in a condition, which shall bring no discredit to the City or its personnel, and all affected private improvements shall be restored to at least their original condition. Saturday work may be provided for only by approval of the Engineering Department and the contractor will be responsible for payment of all overtime and other charges associated with having City staff available for inspection and other coordination. Special care must be taken in regards to school zones, including sidewalks. These zones must be maintained open at all times and any alterations to existing shall be coordinated with the School District and the City's Engineering Department.

7.2 CONSTRUCTION SEQUENCE – EROSION /SEDIMENT CONTROL

A. This portion of the document is to familiarize the permit holder/contractors and subcontractors with the general erosion/sediment controls required of all projects. Site-specific requirements contained on the City approved construction plan are in addition to these requirements. These requirements are as follows:

1. Read and follow the sequence of construction shown on the approved plans. Any modifications must be obtained from the Engineering Department prior to deviating from the sequence of construction.

2. The limits of disturbance must be field marked prior to any land disturbance.

3. Within a working day of disturbance, the erosion/sediment control measures must have been installed.

4. Provisions to control dust are to be on site and operational prior to any land disturbance and are to meet the State's permit requirements. The State's dust control permit is to be available at the construction trailer at the site.

5. An erosion/sediment control preconstruction meeting is required prior to any land disturbance.

6. At the erosion/sediment control preconstruction meeting, a review of the area of disturbance and the proposed vegetation removal will be reviewed and approved by the Engineering Department.

7. The permit holder must obtain written approval from the Engineering Department, certifying that the limits of disturbance, dust control measures and

tree protection are correctly marked and installed or ready to implement prior to commencing any clearing.

8. Erosion/sedimentation control best management practices will remain in good working order through the entire project and until all disturbed soil has been stabilized to prevent erosion. Written approval must be obtained by the Engineering Department certifying all disturbed areas.

9. All disturbed areas will be reestablished as per these standards within 21 days of reaching the final grade.

10. Erosion/sedimentation control facilities require mandatory, periodic inspections throughout the construction and until all disturbed areas have been stabilized.

11. Erosion/sedimentation control facilities require regular, frequent inspection of not less than seven days or within 24 hours of a storm event or a snowmelt. Inspection will be documented by submitted the required information contained in the erosion and sediment control plan. Failure to fill out and submit said inspection forms to the Engineering Department would result in the issuance of a work stop order. Work stop order will not be released unless a special erosion and sediment control meeting is held.

12. Keep streets clean at all times. Written permission by the Engineering Department is required prior to washing streets.

13. A copy of these erosion/sediment control notes is to be posted at the site at all times. Failure to post said notes might result in a work stop order.

7.3 PERMITS

The following permits may be required of the contractor:

A. **Excavation Permit** – Where construction will encroach into the public right-of-way or easements, the contractor shall obtain all necessary excavation permits. Within City of South Jordan right-of-way, the permit is secured from the Public Works Department. Within the County areas, a similar permit is required from the County. State roads require a permit from UDOT. Particular attention is called to Section 7.15 and the appropriate standard drawings.

B. **Explosives Permit** – Where the contractor anticipates the use of explosives in conjunction with the water construction, a blasting permit shall be first obtained from the City County and State agencies, and all nearby property owners shall be notified. These permits are discretionary and may not be given for a particular circumstance.

C. **Land Disturbance Permit** – The Contractor is responsible for obtaining a land disturbance permit from the Engineering Department and paying the applicable fees. The Developer shall prepare the necessary grading plans and drawings and submit the necessary reports from a registered geotechnical engineer prior to the permit being issued.

D. **Dust Control Permit** – The contractor is responsible for obtaining a Dust Control Permit from the Department of Environmental Quality Division of Air Quality and paying the applicable fees. The developer shall prepare the necessary Dust Control Permit and necessary drawings and submit the necessary plan and reports from an erosion control specialist prior to the permit being issued. The developer is hereby notified that the possession of a 404 permit does not constitute compliance until all details and BMP's have been reviewed by the City.

E. **Storm Water Pollution Prevention Permit (SWPP)** - The contractor is responsible for obtaining a SWPP Permit from the Department of Environmental Quality Division of Water Quality and paying the applicable fees.

F. **Salt Lake County Development and Construction Permit** - The Developer is to obtain and submit this permit to the City if the subdivision is within 100 feet of a critical flood area as defined by Salt Lake County. If the project is not within 100 feet of a critical flood area as defined by Salt Lake County, the Developer is to submit a letter from Salt Lake County to the City so indicating.

G. **Corps of Army Engineer 404 Permit** – The contractor is responsible for obtaining a grading permit from the Corp of Army Engineer or the Natural Resource Conservation Service and paying the applicable fees. The developer shall prepare the necessary plans, drawings, and reports. That will specify detail all erosion control, sediment control, re-vegetation and urban drainage BMP and submit said items to the City from a qualified professional in their respective field, prior to the permit being issued. The developer is here by notified that the possession of 404 permit does not constitute compliance until all details and BMP have been reviewed by the City.

H. **Utah Department of Transportation (UDOT) Access Permit** – The developer/contractor is responsible for obtaining a UDOT access permit for any work, which will require a connection to a UDOT owned and maintained roadway.

I. **Utah Department of Transportation (UDOT) Encroachment Permit** - The developer/contractor is responsible for obtaining a UDOT encroachment permit for any work, which will impact UDOT, owned property.

J. **Canal Company Discharge Permit** – The discharge of any surface water to an irrigation canal will require that the developer/contractor obtain a storm water discharge permit from that canal company.

K. **Other Permits** - Other permits may also be required by other agencies, which must be applied for and obtained by the developer or his contractor. Certain permits are also required as part of the development conditioning process which must be provided prior to beginning construction of the project. Please refer to the City's 'Development Processing Manual' for additional information.

7.4 INSPECTION

A. **General Excavating and Grading Requirements**

1. Supervision. The land disturbance permit holder shall provide sufficient supervisory control during the grading operations to insure compliance with the

approved plans and with the provisions of this Code. The land disturbance permit holder shall avail himself of geological and/or soils engineering services to implement the supervisory control of the land disturbance permit holder's registered civil engineer. The engineering geologist and/or soils engineer shall be properly qualified, in accordance with the provisions of this chapter, and qualified to perform such services within the City. Periodic reports as required by the City Engineer shall be submitted by the soils engineer and/or engineering geologist.

1. Safety precautions during grading. If, at any stage of work on an excavation or fill, the City Engineer determines by inspection that further work as authorized by an existing land disturbance permit is likely to endanger any property or public way, the City Engineer may require that plans for such affected area be amended to include adequate safety precautions as a condition to allow the work to continue. The City Engineer may cause the work on the affected area to be halted and may require that plans be amended to include adequate safety precautions as a condition to allow the work to continue.

   Safety precautions may include, but shall not be limited to, specifying a flatter exposed slope or construction of additional drainage facilities, berms, terracing, compaction, cribbing, retaining walls or buttress fills, slough walls, desilting basins, check dams, benching, wire mesh and guniting, rock fences, revetments, or diversion walls.

3. Supervised grading. Where necessary, the City Engineer shall require the land disturbance permit holder to employ:

   a. A registered civil engineer to supervise all grading;
   b. A soils engineer to provide either constant or continuous soils inspections: and
   c. An engineering geologist to provide either constant or continuous geological inspections as suit the job.

   The employment of such persons shall not be deemed to render unnecessary inspections described in this chapter, except that on any work requiring the continuous supervision and inspection of a registered civil engineer, the inspections required by this section may be delegated to the registered civil engineer by the City Engineer.

   If the registered civil engineer, soils engineer, or engineering geologist, fulfilling his responsibility pursuant to the provisions of this section, finds that work is not being done in conformance with the provisions of this chapter or the plans and specifications approved by the City Engineer, the registered civil engineer, soils engineer, or engineering geologist shall immediately notify the person in charge of the grading work, and if the nonconformity is not corrected, the City Engineer shall be notified in writing of the nonconformity and of the corrective measures to be taken. Such notice shall be delivered to the office of the City Engineer within twenty-four (24) hours except in the case of mass grading, which is more than 10,000 cubic yards per day, when the time limit shall be eight (8) hours.

If, for any reason, the services of any of the three (3) professional persons are terminated during the progress of the grading work, such professional person and the land disturbance permit holder shall immediately notify the City Engineer in writing. Such termination may result in temporary delays in the grading operations until satisfactory arrangements are made to assure the City Engineer that competent professional supervision is provided. When the services of one or all three (3) of the professionals of record are terminated, the professional whose services have been terminated shall submit to the City Engineer certification of work performed under his supervision, along with deficiencies to be corrected. The new professional shall submit to the City Engineer a letter of certification that the previous professional's design, reports, and recommendations have been reviewed, that all provisions the City Engineer required as conditions of the land disturbance permit will be complied with during the course of the work, and that he shall review the detailed grading plans and thus assume his responsibility as set forth in this chapter for all future grading on the project. The letters shall be referenced to the approved grading plans prepared by the design civil engineer.

The certification shall state that the job was constructed as indicated by the "as built" plan, that the soils engineer and engineering geologist's reports and certifications have been submitted, that they have provided their services in accordance with good practices, and that all drainage provisions and safety features have been incorporated in the grading of the site.

B. **Inspections of Excavations and Fills**

1. Requirements. All construction or work for which a land disturbance permit is required shall be subject to inspections by authorized employees of the City, and certain types of work to be determined by the City Engineer shall have either continuous or constant inspection and supervision by a registered civil engineer, and/or other appropriate consultants, soils engineer, and engineering geologist as a condition of the issuance of the land disturbance permit. Prior to issuing a grading certificate, a final inspection shall be made of all construction or work for which a land disturbance permit has been issued.

2. Exposure of work. Whenever any work on which called inspections are required, as specified in this section, is covered or concealed by additional work without having first been inspected, the City Engineer may require, by written notice, that such work be exposed for examination. The work of exposing and recovering shall not entail expense to the City.

3. Notices. The land disturbance permit holder or his agent shall notify the City Engineer twenty-four (24) hours in advance of the time when the grading operation is ready for each of the following inspections:

   a. Initial inspections. When the land disturbance permit holder is ready to begin work but before any grading or brushing is started;
   b. Toe inspections. After the natural ground is exposed and prepared to receive fill but prior to the placing of any fill. Approval for placing fill shall not be made until all debris and unsuitable material has been removed from the site to an approved location;

c. Sub-drain inspections. Inspections shall be required on all sub-drains after the installation but prior to the placement of any fill;

d. Excavation inspections. After the excavation is started but before the vertical depth of the excavation exceeds ten (10') feet;

e. Fill inspections. After the fill emplacement is started but before the combined vertical height of the lift exceeds ten (10') feet;

f. Drainage device inspections. After the forms, steel reinforcement, and pipe are in place but before any concrete is placed;

g. Rough grading. When all the rough grading has been completed. This inspection may be called for at the completion of the rough grading without the necessity of the City Engineer having previously reviewed and approved applicable reports;

h. Rough grading certification. A conditional interim certificate may be issued to the City Engineer to allow the issuance of building land disturbance permits. This certificate shall in no way exonerate the applicant from completing the grading;

i. Final certification. When all work, including the installation of all drainage structures, other protective devices, the compaction of trench backfill, and planting and slope stabilization, has been completed and the "as built" plan and required reports have been submitted;

j. Other inspections. In addition to the called inspections provided by this section, the City Engineer may make any other inspections of any work to ascertain compliance with the provisions of this chapter and other laws; and

k. Interrupted grading. When the land disturbance permit holder is ready to resume work, but before any grading or brushing is started, the land disturbance permit holder or his agent shall notify the City Engineer twenty-four (24) hours in advance of the time when the grading operation is ready.

4. Certification. The Developer's engineer shall certify to the Building Official, upon the completion of the grading work, that all grading work has been done in compliance with all approved grading plans and reports and that all applicable Building Code regulations shall be administered by the office of the Building Official thereafter.

5. Issuance of certificates. Upon the final inspection when it is found that the work authorized by the land disturbance permit, including the installation of all drainage structures, has been satisfactorily completed in accordance with the requirements of this chapter, a grading certificate covering such work shall be issued to the land disturbance permit holder by the City Engineer.

6. Final reports. Upon the completion of the work, the City Engineer may require the following reports and information:

a. A report from a registered civil engineer certifying that all grading, lot drainage, and drainage facilities have been completed in conformance with the approved plans and the provisions of this chapter and that the graded site will support residential or commercial type structures, whichever is applicable;

b. A soils engineering report including, but not limited to, certification of the soil bearing capacity, summaries of field and laboratory tests, locations of tests, expansive soil classification lot by lot, and slope tests taken in the fills showing the limits of compacted fill on an "as built" grading plan;

c. An engineering geology report by the engineering geologist, based on the final contour map, including specific approval of the grading as affected by geological factors. Where necessary, a revised geologic map, cross sections, and any recommendations necessary shall be included; and

d. When "as built" grading plans are required, as determined by the City Engineer, such plans shall be signed by the supervising civil engineer, the soils engineer, and the engineering geologist, when applicable, for their portions of the work.

C. **Additional Inspections or Testing** - The City Engineer may require additional inspection and testing by an approved testing when deemed necessary. The testing agency's responsibility may include, but need not be limited to, certification concerning the inspection of cleared areas and benches to receive fill, and determination of the compaction density of fills. Any such additional testing or inspections shall be at the land disturbance permit holder's expense.

D. **Final Inspection** - The developer's engineer shall inspect and certify that the site is ready for final inspection and shall request a final inspection of the City Engineer in writing.

The City Engineer is not give final approval until all work has been completed in accordance with the final approved plans and specifications, including, but not limited to, installation of all drainage facilities and their protection devices, all required re-vegetation, all required erosion and sediment control measures, and an approved post-construction maintenance schedule is established. The acceptability of re-vegetation stabilization will be determined by the City using the criteria set forth in the Land Disturbance Design and Construction Standards.

E. **Inspection of Individual Lots** - The construction of buildings and other structures on individual lots shall not begin until after all improvements required as part of the final plat map or site plan have been completed.

As part of the subdivision improvements' inspections, the Engineering Department will provide inspection for all 'subdivision level' related improvements. This will include all improvements within the City's dedicated right-of-way and receipt of certification that the Grading and Drainage Plan and grading and drainage drawings have been complied with (from the design engineer) and the original erosion control measures are in place as required.

Once the subdivision level improvements are in placed and approved, the Building Division will then become responsible for the project on a lot-by-lot basis and is responsible for the 'Lot Level' designs and inspections. This would include receiving certification from the design engineer that the Grading and Drainage Plan, grading and drainage drawings are still being complied with, that the requirements of the lot's 'site plan' are being complied with which would include such items as locations of driveways, their grades, setbacks of the house, retaining walls, etc.

7.5 TRAFFIC REGULATION

A. **General** - The Contractor shall submit a traffic control plan to the City for review and approval. The traffic control plan shall include the times the work shall be ongoing, streets affected, the proposed plan for dealing with traffic as well as a schedule for work to be performed. This work shall be done in accordance with the following technical specification:

1. Section 02010 – Traffic Regulation

7.6 CLEARING AND GRUBBING

A. **General** - Clearing and grubbing which consists of removal of objectionable material from the right-of-way and project shall be done with caution such that existing wastewater improvements, adjacent property and trees and shrubbery that are not to be removed shall be protected from injury or damage. In areas of excessive deep organic layer the clearing and grubbing shall be defined as a depth not to exceed 12 inches. The sequence of construction will be followed by the contractor and have the sediment and dust control BMP in place as the clearing and grubbing proceeds. At no time will the contractor leave the site at the end of the day without providing for sediment and dust controls.

Within public utility easements or rights-of-way, trees, shrubs, fences and all other improvements that have to be removed to permit construction and which are intended for replacement, shall be replaced in kind or size (excluding native trees under 2-inch diameter or native brush) or with approved substitutes unless permission to exclude such replacement is obtained from the owner/agency or granted by the Engineering Department. Replacement trees shall have a minimum diameter caliber, above graft, as recommended by the American Association of Nurserymen, but shall be larger if so required. This work shall be done in accordance with the following technical specification:

1. Section 02112 – Clearing, Grubbing and Stripping

B. **Removal and Disposal of Material** – The contractor shall be responsible for leaving the site in a neat and finished appearance, free from debris and/or inflammable material. Debris to be legally transported to a legal disclosed landfill. Under no condition will debris be buried, including vegetation.

7.7 UTILITIES, EXISTING FACILITIES AND CONCRETE REMOVAL

A. **Abandonment** - Refer to Section 8.0 regarding abandonment of roadways and/or structures.

B. **Utilities and Existing Facilities** - The existing utilities and/or facilities shown on the drawings or the location of which is made known to the contractor prior to excavation, by contacting Blue Stakes 2 working days or as required by the involved utility companies, shall be protected from damage during the excavation and backfilling of trenches and, if damaged, shall be repaired by and at the contractor's expense. Any existing utility or facility not shown on the drawings or the location of which is not shown to the contractor in sufficient time to avoid damage, if inadvertently damaged during excavation, shall be

repaired by the contractor; and adjustment in payment, if any, is subject to negotiation between the contractor and the developer without any City liability, unless it is a City sponsored project.

Whether expressly indicated on the drawings or not, all contractors shall call Blue Stakes prior to any clearing, grubbing, or excavating. Failure to do so shall not relieve the contractor of any liability associated with disturbance/ breakage of existing utilities. This work shall be done in accordance with the following technical specification:

1. Section 02223 – Protecting Existing Underground Utilities

In case it shall be necessary to remove any such utilities, facilities or any portions thereof, the contractor shall notify the Engineering Department and the owner of the structure. The contractor shall not interfere with said utility and/or facility structures until disposition of the obstruction to the work has been determined and/or notice to relocate or remove has been given by the Engineering Department or authorized agent of the owner of the utility and/or facility so affected.

The fact that any underground utility and/or facility is not shown on plans shall not relieve the contractor's responsibility to comply with these standards. It shall be the contractor's responsibility to ascertain prior to commencing work the existence of any underground utilities or facilities that may be subject to damage by reason of operations performed by the contractor.

C. **Concrete, Masonry or Mortared Construction Removal** - At locations shown on plans, portions of existing concrete pavement, curbs, gutters, sidewalks, foundations and other concrete or mortared structures shall be removed to the lines and elevations specified. Concrete structures or objects not shown or noted on the plans shall be removed where necessary and disposed of by the contractor.

Concrete removal operations in connection with the reconstruction of existing structures shall be performed without damage to any portion of the structure that is to remain in place. If damage occurs, the contractor shall repair any such damage at his own expense, to the satisfaction of the Engineering Department. Repair/replacement of any sidewalks, curbs and/or gutters shall be to the satisfaction of the Engineering Department, as appropriate. Where existing reinforcement is to be incorporated in new work, such reinforcement shall be protected from damage and shall be thoroughly cleaned of all adhering material before being embedded in new concrete.

7.8 EXCAVATION AND TRENCHING

A. **General** - Trench excavation shall consist of all excavation involved in the grading and construction of water lines, and other utilities and facilities as shown on plans. The contractor shall perform all excavation of every description and of whatever substances encountered, to depths indicated on the drawings or otherwise specified or required. During excavation, material suitable for backfilling shall be piled in an orderly manner a sufficient distance from the banks of the trench to avoid overloading and to prevent slides or cave-ins. The material piles shall also not obstruct existing sidewalks, roadways, or driveways unless approved in writing by the Engineering Department. All excavated materials not required or unsuitable for backfill shall be removed. Such grading shall be done as may be necessary to prevent surface water from flowing into trenches or other

excavations, and any water from any source accumulating therein shall be removed by pumping or by other approved methods. Such sheeting and shoring shall be done as may be necessary for the protection of the work and for the safety of personnel.

Unless otherwise indicated, excavation shall be by open cut except that short sections of a trench may be tunneled if, in the opinion of the Engineering Department, the pipe or duct can be safely and properly installed and backfill can be properly tamped in such tunnel sections. If blasting is necessary, the contractor shall notify the City of his blasting schedule and procedures and obtain a blasting permit, and shall observe all reasonable precautions in protecting life and property. This work shall be done in accordance with the following technical specification:

1. Section 02200 - Earthwork
2. Section 02201 – Earthwork (For Roads and Highways Only)
3. Section 02211 - Rough Grading

B. **Excavation** - Excavation for water lines shall be made only after pipe and other necessary materials are delivered on the work site. After such delivery, trench excavation shall proceed as rapidly as possible, and the pipe installed and the trench backfilled without undue delay.

C. **Shoring** - All shoring for open excavations shall conform to the State of Utah, Department of Industrial Relations, and Division of Industrial Safety "Construction Safety orders (O.S.H.A)." The contractor shall be responsible for adequately shored and braced excavations so that the earth will not slide, move or settle, and so that all-existing improvements of any kind will be fully protected from damage.

No shoring once installed shall be removed until the trench has been approved for backfill operations. Removal of shoring shall only be accomplished during backfill operations and in such a manner as to prevent any movement of the ground or damage to the pipe or other structures.

The contractor shall obtain and pay for all permits for any excavations over 5 feet (1.5m) in depth into which a person is required to descend or any excavation less than 5 feet (1.5m) in depth in soils where hazardous ground movement may be expected and into which a person is required to descend.

7.9 BACKFILL AND COMPACTION

A. **General** - There are several distinct zones to be considered in the backfilling procedure as follows:

1. Pipe Zone. This area is from the trench bottom to 12 inches (300 mm) above the pipe. This zone is to be backfilled under the strict jurisdiction of the Engineering Department.

2. Above pipe zone but below pavement sub-grade plus the zone including the sub-grade and pavement Backfill and compaction in existing streets and in the area above the pipe zone shall be in full accordance with the City excavation permit issued for the specific work, and with the City land development specifications. In both cases, the filling of trenches shall be subject to approval by the City or

Engineering inspector who shall have full authority to order compaction tests to demonstrate the actual backfill density.

7.10 CONSTRUCTION WATER

A. **General** - The developer/contractor shall not take unmetered water from the City's or any other culinary water system. Instead, he or she should sign up at the Public Works Department for one or more construction meters after receipt of a deposit amount. The developer/contractor is not to move the construction meters. Charges for construction water are covered by City Council Resolution. The developer/contractor is put on notice that unpaid invoices will result in removal of the construction meter. This work shall be done in accordance with the following technical specification:

1. Section 02161 - Care of Water

7.11 SUBGRAGE PREPARATION AND PLACEMENT OF BASE MATERIALS

A. **General** – This work shall provide for the preparation of natural, filled, or excavated roadbed material prior to the placement of subbase or base material, pavement, curbs and gutters, driveways, sidewalks, or other roadway structures.

B. **Subgrade Preparation** – This work shall be done in accordance with the following technical specification:

1. Section 02227 - Sand-Cement Slurry
2. Section 02280 - Soil Treatment
3. Section 02514 - Soil Cement Base

C. **Untreated Base** – This work provides for untreated base for pavement, curb, gutter and similar types of improvements that shall be constructed according to their technical specification sections.

7.12 CONCRETE AND MASONRY CONSTRUCTION

A. **General** – This work provides for construction of concrete structures, curbs & gutter, sidewalks, cross gutters and driveways connected to grading, erosion, revegetation and sedimentation control projects. This work shall be done in accordance with the following technical specification:

1. Section 03100 - Concrete Formwork
2. Section 03102 – General Concrete Construction
3. Section 03200 - Concrete Reinforcement Steel
4. Section 03300 - Cast-in-Place Concrete
5. Section 03304 – Minor Concrete

B. **Concrete Structures** – Concrete bridges, culverts, catch basins, retaining walls, abutments, piers, footings foundations, and similar structures shall be constructed in conformity with the plans and specifications. Retaining walls are to be inspected by the Developer's engineer with reports being submitted to the City for review.

C. **Concrete Curbs & Gutters, Sidewalks, Cross Gutters, and Driveways** – Concrete curbs, walks, gutters cross gutters, alley intersections, access ramps, and driveways shall be constructed of Portland cement concrete of the class and other requirements prescribed in the plans and specifications. The finish coat to be applied to curbs shall consist of Class "B" mortar.

7.13 LANDSCAPE AND IRRIGATION SYSTEMS

A. **General** – This section shall govern the preparation, planting, and irrigation system construction for landscape areas required by the City.

Existing utilities and improvements not designated for removal shall be protected in place. Unless otherwise provided, walls, curbs, planter boxes, walks, irrigation systems, and similar improvements required by the City shall be constructed following rough grading and before landscaping.

B. **Testing** - All work on the irrigation system, including hydrostatic and coverage tests, preliminary operational tests of the automatic control system, and the backfill and densification of trenches, and other excavations shall be performed after topsoil work and before planting. This work shall be done in accordance with the following technical specification:

1. Section 02811 - Landscape Irrigation System

SECTION 8.0

ABANDONMENT

8.1 GENERAL

The developer's engineer shall indicate all existing roadways, water or storm drain lines or structures, which are to be abandoned, on the drawings. In general, abandoned lines, which are in service, will be replaced with a parallel line of equal or larger size, and the engineer shall demonstrate in any case that the abandonment does not adversely affect the operation of the system.

All abandonment of property and abandonment and construction of underground pipelines shall be discussed with the Engineering Department and approved prior to any such work.

8.2 UNDERGROUND UTILITY LINES

Underground utility lines to be abandoned shall be entirely filled by pumping concrete into them. The pump mix shall be a mixture sufficiently workable for the purpose intended and shall be a concrete mix of 200-psi minimum. The engineer shall show on the drawings the approximate number of cubic yards of concrete, which will be required for any particular reach.

8.3 STRUCTURES

Structures associated with lines to be abandoned shall be removed by the contractor/developer and given to the City, if salvageable.

8.4 EASEMENTS OR RIGHT-OF-WAY

All easement and right-of-way abandonments shall be provided for as part of the development processing, not during construction. If it is determined that easements or property must be abandoned during construction, the project will be put on hold until the property issues are resolved to the satisfaction of the City, and/or the Salt Lake County Recorder's office.

SECTION 9.0

TESTING

9.1 GENERAL

This section applies to grading and soils materials testing, erosion control materials and storm drain system materials testing, concrete and other miscellaneous materials tested associated with this standard. The references made here are for general information only and the individual construction specifications need to be referenced for additional details on testing for that specific item. The testing of culinary water, storm drainage facilities, wastewater, parks and trails, and road and bridge facilities are addressed in other design and construction standards.

9.2 CONCRETE TESTING

A. The following references apply to concrete related items including concrete mix design, testing of aggregates and cement, reinforcing steel, concrete unit masonry, and others:

ACI 214-77	Recommended Practice for Evaluation of Strength Test Results of Concrete.
ACI 301-79	Specifications for Structural Concrete for Buildings.
ACI 304	Specifications for Site Mixed Concrete
ACI 308	Specifications for Curing Concrete
ACI 315-80	Details and Detailing of Concrete Reinforcement.
ACI 318-77	Building Code Requirements for Reinforced Concrete. WRI Manual of Standard Practice for Welded Wire Fabric
ACI 347-78	Recommended Practice for Concrete Formwork.
ASTM A82-79	Specification for Steel Wire, Plain, for Concrete Reinforcement.
ASTM A185-79	Specification for Welded Steel Wire Fabric for Concrete Reinforcement.
ASTM A478	Specification for Precast Reinforced Concrete Manhole Sections
ASTM A615-82	Specification for Deformed and Plain Billet-Steel Bards for Concrete Reinforcement
ASTM A775	Test Methods for Epoxy Coatings
ASTM C31-84	Methods of Making and Curing Concrete Test Specimens in the Field.
ASTM C33-84	Specification for Concrete Aggregates.
ASTM C34	Testing of Concrete Specimens
ASTM C39-83b	Test Method for Compressive Strength of Cylindrical Concret Specimens.
ASTM C76	Specification for Reinforced Concrete Culvert Storm Drain and Sewer Pipe
ASTM C90	Specifications for Concrete Masonry Units
ASTM C94-83	Specification for Ready-Mixed Concrete.
ASTM C114-83b	Method for Chemical Analysis of Hydraulic Cement.
ASTM C127	Method of Sieve Analysis of Course Aggregate
ASTM C136-84a	Method for Sieve Analysis of Fine and Coarse Aggregate.
ASTM C143-78	Test Method for Slump of Portland Cement Concrete.
ASTM C144	Specifications for Masonry Mortar
ASTM C150-84	Specification for Portland Cement.

ASTM C156-80a	Test Method for Water Retention by Concrete Curing Materials.
ASTM C157-80	Test Method for Length Change of hardened Cement Mortar and Concrete.
ASTM C192-81	Method of Making and Curing Concrete Test Specimens in the Laboratory.
ASTM C207	Specifications for Hydrated Lime
ASTM C231	Specifications for Concrete Mix Air Content
ASTM C260-77	Specification for Air-Entraining Admixtures for Concrete.
ASTM C309	Specifications for Concrete Curing Compound
ASTM C311-85	Method for Sampling and Testing Fly Ash or Natural Pozzolans for Use as a Mineral Admixture in Portland Cement Concrete.
ASTM C404	Specifications for Concrete Unit Masonry Aggregate
ASTM C443	Specifications for Rubber Gaskets
ASTM C478	Pre-cast Concrete Manholes
ASTM C494-82	Specification for Chemical Admixtures for Concrete.
ASTM C578	Specifications for Rigid Insulation for Concrete
ASTM C615	Specifications for Reinforcing Steel
ASTM C618-85	Specification for Fly Ash and Raw or Calcined Natural Pozzolan for Use as a Mineral Admixture in Portland Cement Concrete.
ASTM D173	Specifications for Saturated Cotton Fabric
ASTM D1751-83	Specification for Preformed Expansion Joint Fillers for Concrete Paving and Structural Construction (Non-extruding and Resilient Bituminous Types).
ASTM D1752	Specifications for Expansion Joint Material
ASTM E119-83	Method for Fire Tests of Building Construction and Materials.
AWS Dl.4-79	Structural Welding Code - Reinforcing Steel.
PS 1-74	U.S. Product Standard for Concrete Forms, Class I.

9.3 SOILS TESTING

A. The following references apply to soils, excavation, grading and recompaction efforts related items. They are as follows:

ASTM D 422-63(1972)	Method for Particle-Size Analysis of Soils.
ASTM D 698-78	Test Methods for Moisture-Density Relations of Soils and Soil Aggregate Mixtures, Using 5.5lb (2.49kg) Rammer and 12-in (304.8 mm) Drop.
ASTM D 1140-54(1971)	Test Method for Amount of Material in Soils Finer than the No. 200 (75 mm) Sieve.
ASTM D 1556-82	Test Method for Density of Soil in Place by the Sand-Cone Method.
ASTM D 1557-78	Test Methods for Moisture-Density Relations of Soils and Soils-Aggregate Mixtures using 10-lb. (4.54 kg.) Rammer and 18-in. (457mm.) Drop.
ASTM D 1663-84	Test Method for Compressive Strength of Molded Soil-Cement Cylinders.
ASTM D 2419-74(1979)	Test Method for Sand Equivalent Value of Soils and Fine Aggregate.
ASTM D 2487-83	Classification of Soils for Engineering Purposes.
ASTM D 2901-82	Test Method of Cement Content of Freshly-mixed Soil Cement.

ASTM D 2922-81	Test Methods for Density of Soil and Soil-Aggregate in Place by Nuclear Methods (Shallow Depth).
ASTM D 4318-84	Test Method for Liquid Limit, Plastic Limit, and Plasticity Index of Soils.

9.4 STORM DRAINAGE SYSTEM TESTING

A. The following references apply to storm drainage system related items including piping, trench backfill and compaction and storm drainage appurtenances.

AASHTO M 252	Corrugated Polyethylene Drainage Tubing
ASTM C76 (1989)	Reinforced Concrete Culvert, Storm Drain, and Sewer Pipe
ASTM D422	Particle-Size Analysis of Soils
ASTM D698	Test Method of Moisture-Density Relations of Soils and Soil-Aggregate Mixtures Using 5.5 lb (2.5-kg) Rammer and 12-inch (305mm) Drop
ASTM D2321	Recommended Practice for Installation of Corrugated Polyethylene Pipe
ASTM D2487	Classification of Soils for Engineering Purposes
ASTM D2922	Density of Soil and Soil-Aggregate in Place by Nuclear Methods (Shallow Depth)
ASTM D3017	Water Content of Soil and Rock in Place by Nuclear Methods (Shallow Depth)
ASTM D	3034 Standard Specifications for Sewer Pipe and Fittings

9.4 MISCELLANEOUS TESTING

A. The following references apply to miscellaneous item including PVC piping, testing methods for plastic sheeting and film, gaskets, etc.

AWWA M 23	Manual of Water Supply Practices – PVC Pipe – Design and Installation
ASTM D638	Standard Test Method for Tensile Properties of Plastics
ASTM D746	Standard Test Method for Brittleness Temperature of Plastics and Elastomers By Impact
ASTM D792	Standard Test Method for Specific Gravity and Density of Plastics by Displacement
ASTM D1004	Test Method for Initial Tear Resistance of Plastic Film and Sheeting
ASTM D1204	Test Method for Linear Dimensional Changes of Nonrigid Thermoplastic Sheeting or Film at Elevated Temperature
ASTM D1238	Standard Test Method for Flow Rates of Thermoplastics by Extrusion Plastomer
ASTM D1505	Test Method for Density of Plastic by the Density-Gradient Technique
ASTM D1593	Specification for Nonrigid Vinyl Chloride Plastic Sheeting
ASTM D1603	Test Method for Carbon Black in Olefin Plastics
ASTM D1693	Test Method for Environmental Stress-Cracking of Ethylene Plastics
ASTM D2564-80	Test Method for PVC Solvent Cement

ASTM D3015	Standard Practice for Microscopical Examination of Pigment Dispersion in Plastic Compounds
ASTM D4437	Practice for Determining Integrity of Field Seams Using Joining Flexible Polymeric Sheet Geomembranes

Federal Specification

SS-S-00210	Plastic Sealing Gasket

SECTION 10.0

WORK AREA CLEAN-UP

10.1 FINAL PROJECT CLEAN-UP

During construction the Contractor must take care to not track dirt, mud or other debris from the construction site onto adjacent City streets or private property. Vehicles must be washed down prior to leaving the construction site, if mud is present, an/or the Contractor must employ a sweeper to clean the streets daily. In all cases the contractors are required to adhere to the Inspector requirements. The details, penalties, etc. are contained in the City's Municipal Code.

Once all roadway work has been completed and can be field accepted, the Contractor shall clean the streets, curbs, gutters and nearby affected areas to the satisfaction of the City. All structures including fire hydrants shall be properly painted, where required, and free from dirt, concrete or other spattered materials. Also, the work site will be cleaned of construction debris by the contractor. All private improvements damaged during construction shall be restored to at least the original condition of said improvements including but not limited to trees, shrubs, curbs, gutters, sidewalks, fences, grass, etc. Filled excavations in private property shall be neatly finished in a manner to facilitate natural drainage and eliminate hazards to persons or property. Also, all requirements of the Engineering Department, Community Development Department, and other requirements shall be met. The project shall be left in a final condition that brings no discredit to the City.

SOUTH JORDAN
UTAH

BEST MANAGEMENT PRACTICES FOR CONSTRUCTION ACTIVITIES

BMP REFERENCE MANUAL

This manual is intended as guidance for implementing stormwater Best Management Practices at construction sites. It does not represent all BMPs, but rather a presentation of the more common BMP's accepted by South Jordan City.

South Jordan City cannot be held liable for special, collateral, incidental or consequential damages in connection with or arising from using techniques presented in this manual.

STORMWATER AND CONSTRUCTION ACTIVITIES

A landowner or primary contractor who plans or conducts construction activity with a land disturbance of greater than or equal to one acre, **including projects less than one acre that are part of a larger common plan of development or sale** is required to obtain a permit from the Utah Division of Water Quality. The permit may be obtained on-line at www.waterquality.utah.gov/updes/stormwater. Please note that the permit is required **BEFORE** construction starts. The permit requires the development and implementation of a Storm Water Pollution Prevention Plan (SWPPP) that identifies potential sources of stormwater pollutants and Best Management Practices (BMPs) to reduce or eliminate their impacts.

BMPs are practices that control stormwater sediment and erosion to the maximum extent practicable (MEP). These controls include a wide range of structural and non-structural options. This booklet presents BMPs that are recommended by the Utah Division of Water Quality and the Environmental Protection Agency.

Contractors may use this booklet as general guidance related to BMPs; it is up to the contractor to select appropriate BMPs and implement and maintain these BMPs. Selection of BMPs will be site specific and deviation from those presented here may be appropriate given the conditions, contractor experience and new technology. Variations are acceptable provided implemented controls meet the intent of the BMP.

ADDITIONAL INFORMATION

Salt Lake County Stormwater Coalition
http://www.stormwatercoalition.org/

Salt Lake County Department Flood Control Engineering
http://www.pweng.slco.org/flood/index.html

Salt Lake County Public Works Stormwater Management
www.pweng.slco.org/strm/html/guide.html

State Division of Water Quality
http://www.waterquality.utah.gov/UPDES/stormwater.htm

US Environmental Protection Agency
http://cfpub1.epa.gov/npdes/home.cfm?program_id=6

Center for Watershed Protection
http://www.cwp.org/

Low Impact Development
http://www.lid-stormwater.net/

StormCon
http://www.forester.net/sc.html

Water Environment Federation
http://www.wef.org/Home

Stormwater Authority
http://www.stormwaterauthority.org/

TABLE OF CONTENTS

FloGard Inlet protection....1
Benching....2
Bioengineering....3
Building Repair, Remodeling, and Construction....4
Check Dams....5
Chemical Mulch....6
Compaction....7
Concrete Waste Management....8
Construction Road Stabilization....9
Construction Sequencing....10
Contaminated or Erodible Surface Areas....11
Diversion Dike....12
Dust Controls....13
Earth Berm Barrier....14
Employee Training....15
Equipment & Vehicle Wash Down Area....16
Erosion Control Blanket....17
Filter Strips....18
Floatation Silt Curtain....19
Geotextiles and Mats....20
Hazardous Waste Management....21
Hydromulching....22
Inlet Protection – Excavated....23
Inlet Protection – Silt Fence/Straw Bale....24
Inlet Protection – Wattle....25
Inspection & Maintenance....26
Land Grading....27
Material Storage....28
Material Use....29
Mulching....30
Outlet Protection....31
Portable Toilets....32
Preservation of Existing Vegetation....33
Sandbag Barrier....34
Sediment Basin....35
Sediment Trap....36
Silt Fence....37
Slope Drain....38
Spill Clean-up....39

TABLE OF CONTENTS
(Continued)

Stabilized Construction Entrance 40
Straw Bale Barrier 41
Street Sweeping 42
Surface Roughening 43
Temporary and Permanent Seeding and Planting 44
Temporary Drains and Swales 45
Temporary Stream Crossing 46
Vehicle and Equipment Cleaning 47
Vehicle and Equipment Fueling 48
Vegetated Buffers 49
Waste Disposal 50

FG-TB-0001

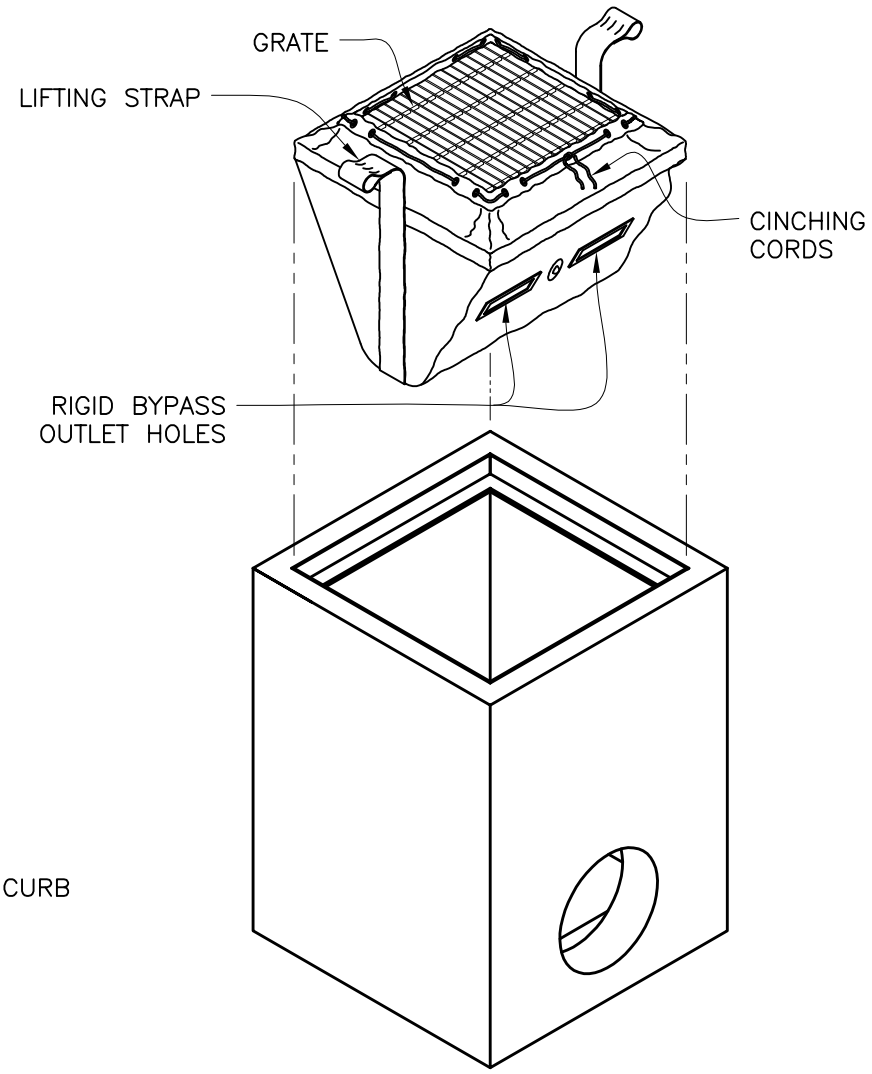

SPECIFIER CHART		
MODEL NO.	CATCH BASIN ID Inside Dimension (inch x inch)	CURB DAM OPTION (YES / NO)
FG-TB24	24 X 24	NO
FG-TB24D	24 X 24	YES
FG-TB2436	24 X 36	NO
FG-TB2436D	24 X 36	YES
FG-TB36	36 X 36	NO
FG-TB36D	36 X 36	YES

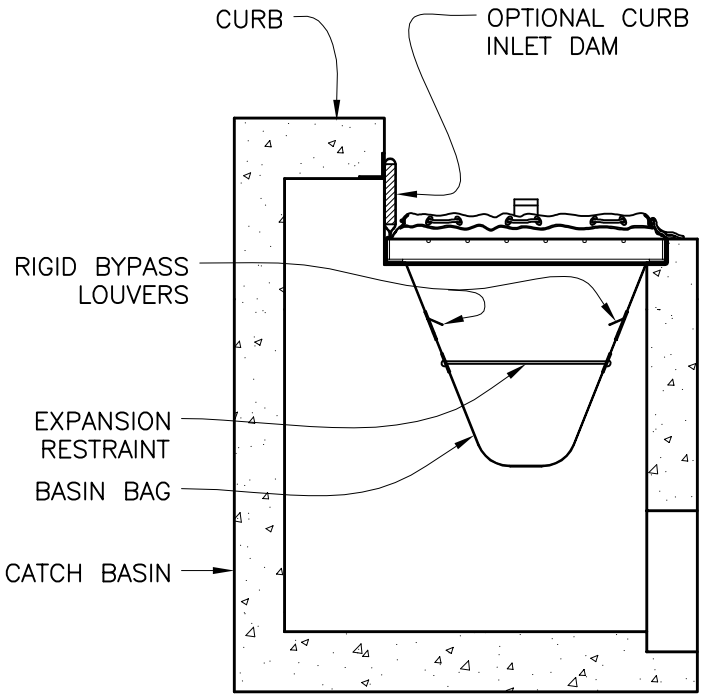

SECTION VIEW
-INSTALLED-
WITH OPTIONAL CURB INLET DAM

NOTES:

1. FloGard® T-Bag™ is manufactured from woven monofilament polypropylene fabric. Other materials available upon request.
2. May be ordered with *Fossil Rock* ™ oil absorbent pouches installed.
3. Optional curb inlet dam available upon request.
4. Periodic maintenance is required. FloGard® T-Bag™ should never be allowed to fill beyond the top of the bypass outlet louvers.
5. Appropriate lifting equipment should be used when performing periodic maintenance.

TITLE

FloGard® T-BAG™

TEMPORARY INLET PROTECTION DEVICE

KriStar Enterprises, Inc.
360 Sutton Place, Santa Rosa, CA 95407
Ph: 800.579.8819, Fax: 707.524.8186, www.kristar.com

DRAWING NO.	REV	ECO	DATE	
FG-TB-0001	A	0059 JPR 12/30/08	JPR 09/01/06	SHEET 1 OF 1

BMP: Benching

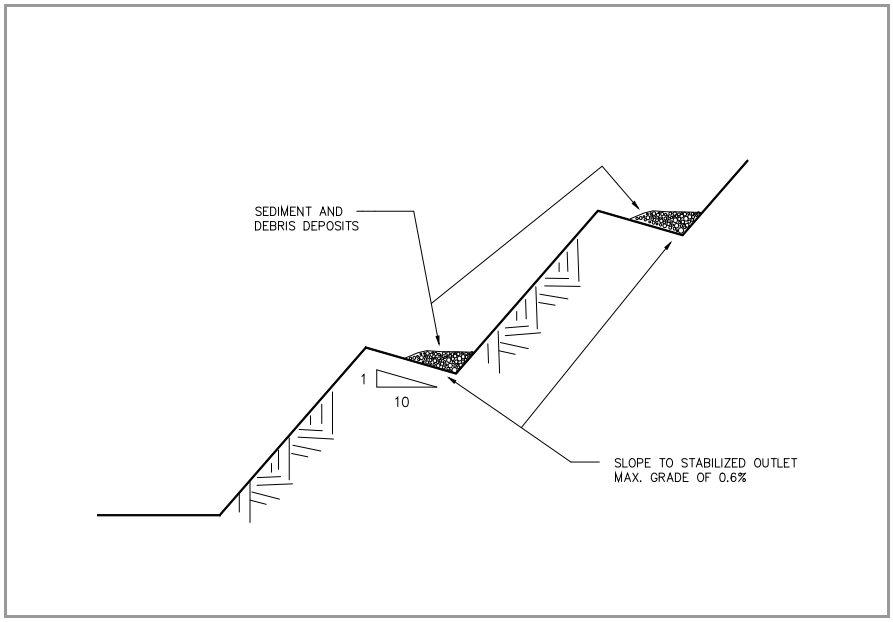

DESCRIPTION:

Slope construction with benches spaced at regular intervals perpendicular to the slope which intercept and collect sheet flow and direct it to a stable outfall point.

APPLICATIONS:

- Unstabilized cut and fill slopes
- Large stockpiles
- Existing unstable slopes

INSTALLATION/APPLICATION CRITERIA:

- Benches should be formed as slope is constructed and graded to the outlet point.
- Stabilized outlet with sediment controls should be in place prior to slope construction.

LIMITATIONS:

- Construction slope design must accommodate benching
- Not appropriate for sandy or rocky soil
- Only effective if suitable outlet provided

MAINTENANCE:

- Inspect after major storm events and at least biannually, repair any damaged areas.
- Remove debris blocking water flow.
- Inspect outlet, repair/replace sediment controls and remove sediment build up.

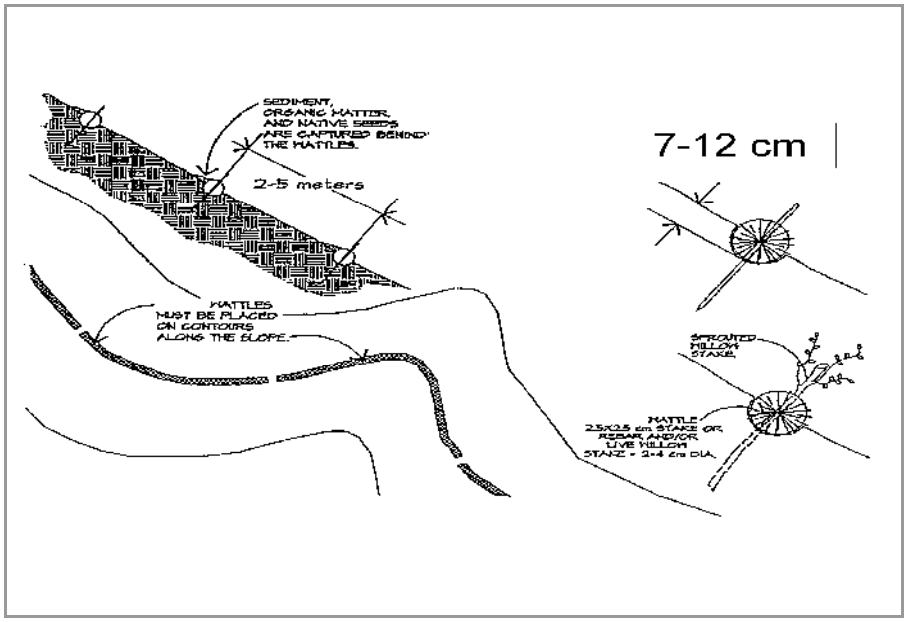

DESCRIPTION:

Bioengineering methods combine vegetative and mechanical techniques to stabilize eroding slopes. Bioengineering methods include sprigging, tubeling and wattling. Sprigging involves planting rhizomes, stolons, shoots or sprouts of a desirable species. Tubelings are forbs, shrubs, or trees commercially available in reusable plastic tubes or sleeves. Wattles are bundles of cuttings from live willows, alders, or similar plants placed and secured in trenches across a slope to aid in slope stabilization.

APPLICATIONS:

- Sprigging may be performed on cut and fill slopes or other areas needing permanent soil stability.
- Tubelings may be placed on any area needing revegetation, but are most useful on slopes or flat areas where poor topsoil conditions inhibit successful seed germination and early plant growth.
- Wattles act to reduce slope length and aid in stabilizing slopes due to surface runoff, frost heaving, needle ice, or other soil movement.

INSTALLATION/APPLICATION CRITERIA:

- Sprigging involves tearing sod apart; planting rhizomes or stolons, or transplanting shoots or sprouts. Sprigs are placed by broadcast, punching-in or with a special sprig planter.
- Tubelings involve drilling holes to the depth necessary to accommodate roots.
- Wattles are best applied to slopes no steeper than 2:1.

LIMITATIONS:

- Availability of plant materials may affect what species can be used.
- May be necessary to arrange for commercially grown tubelings.
- Cannot be used as a substitute for retaining walls or similar devices to stabilize over steepened slopes.

MAINTENANCE:

- Sprigging and tubeling plantings should be checked periodically until they are permanently established.
- Assess the need for replacement plantings or supplemental fertilizer.

DESCRIPTION:

Prevent or reduce the discharge of pollutants to stormwater from building repair, remodeling, and construction by using soil erosion controls, enclosing or covering building material storage areas, using good housekeeping practices, using safer alternative products, and training employees.

APPLICATIONS:

- Use soil erosion control techniques if bare ground is temporarily exposed.
- Use permanent soil erosion control techniques if the remodeling clears buildings from an area that are not to be replaced.

INSTALLATION/APPLICATION CRITERIA:

- Enclose painting operations consistent with local air quality regulations and OSHA.
- Properly store materials that are normally used in repair and remodeling such as paints and solvents.
- Properly store and dispose waste materials generated from the activity.
- Maintain good housekeeping practices while work is underway.

LIMITATIONS:

- This BMP is for minor construction only.
- A licensed hazardous waste hauler must dispose of hazardous waste that cannot be re-used or recycled.
- Safer alternative products may not be available, suitable, or effective in every case.
- Be certain that actions to help storm water quality are consistent with OSHA and air quality regulations.

MAINTENANCE:

None

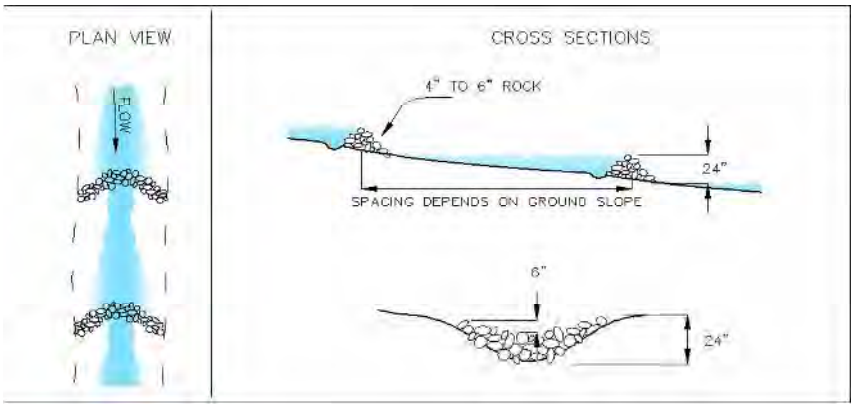

DESCRIPTION:

A small, temporary dam constructed across a drainage ditch to reduce velocity of concentrated storm water flows, thereby reducing the erosion of the ditch.

APPLICATIONS:

- Temporary drainage paths
- Permanent drainage ways not yet stabilized
- Existing drainage paths receiving increased flows due to construction

INSTALLATION/APPLICATION CRITERIA:

- Prepare location of dam by removing any debris and rough grading any irregularities in channel bottom
- Place rocks by hand or with appropriate machinery; do not dump
- Space dams to make the base of the upstream dam the same elevation as the top of the next lower dam
- Construct dam to pass design flows with center lower to create a weir effect
- Construct 50% side slopes on dam

LIMITATIONS:

- Maximum recommended drainage area is 10 acres
- Maximum recommended height is 24"
- Do not use in running stream

MAINTENANCE:

- Inspect dams at a minimum of twice monthly, after each major rain event, and daily during prolonged rainfall.
- Remove any large debris and repair any damage to dam, channel or sideslopes.
- Remove accumulated sediment when it reaches one half the height of the dam.

BMP: Chemical Mulch

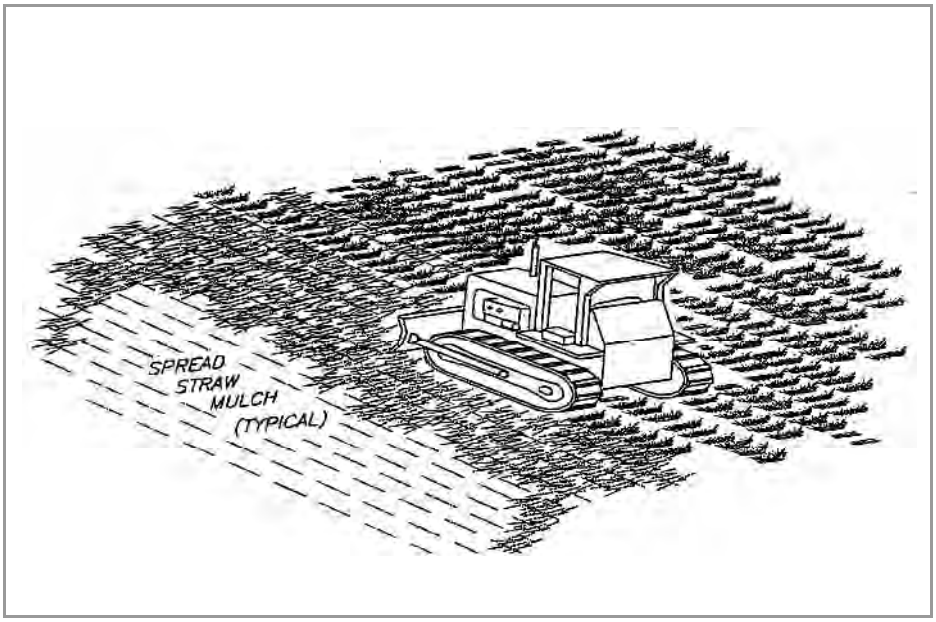

DESCRIPTION:

Applying materials such as vinyl, asphalt, plastics, or rubber on an unprotected slope to temporarily stabilize the slope.

APPLICATIONS:

- As a tacking agent to aid the stabilization of mulches (where matting is not used).
- As a short-term alternative in areas where temporary seeding practices cannot be used because of seasonal condition or climate.
- On steep and rocky slopes where neither mechanical methods or mulches and protective netting can be effectively applied.

INSTALLATION/APPLICATION CRITERIA:

- The application rates and procedures recommended by the manufacturer of a chemical stabilization product should be followed to prevent the products from forming ponds and from creating large areas where moisture cannot get through.
- For permanent application, chemical mulches (when used with seed and mulch) should be applied over wood fiber or straw mulch.

LIMITATIONS:

- Chemical mulches can create impervious surfaces and impact water quality if not properly applied.
- Some products may not be suitable for use near live streams.

MAINTENANCE:

- Inspect at regular intervals and after each runoff-producing storm event.
- Replace chemical mulch as needed to ensure adequate level of coverage.

BMP: Compaction

CP
Construction

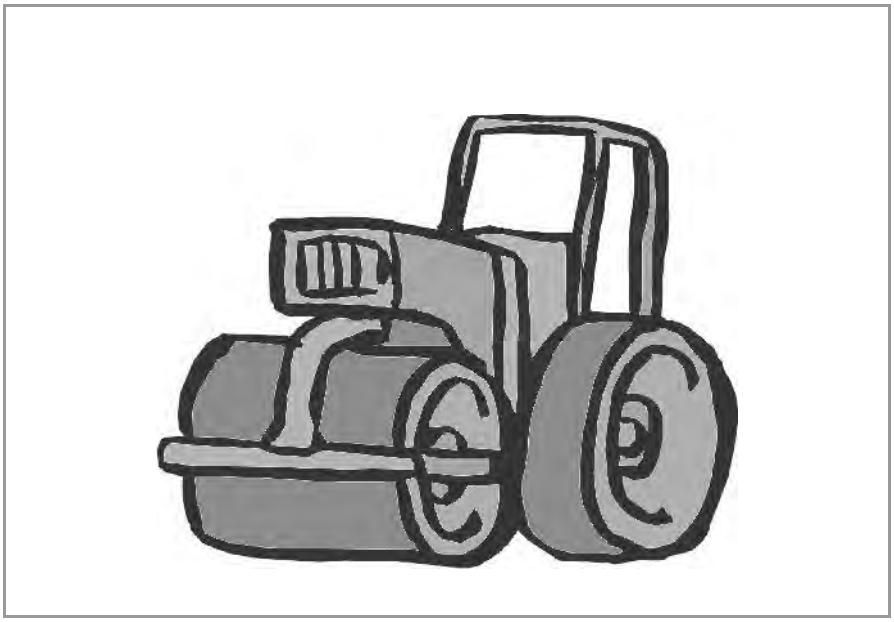

DESCRIPTION:

Use of rolling, tamping, or vibration to stabilize fill materials and control erosion by increasing the soil density. Increasing the density of soil improves soil strength, reduces long-term soil settlement, and provides resistance to erosion.

APPLICATIONS:

- Stabilize fill material placed around various structures.
- Improve soil in place as foundation support for roads, parking lots, and buildings.

INSTALLATION/APPLICATION CRITERIA:

- Make sure soil moisture content is at optimum levels.
- Use proper compaction equipment.
- Install sediment control and storm water management devices below compacted areas and runon interceptor devices above these areas. Drainage from compacted areas must be carefully planned to protect adjacent uncompacted soils.
- The surface of compacted areas should be scarified and seeded or mulched and seeded to increase the effectiveness of compaction.

LIMITATIONS:

- Compaction tends to increase runoff.
- Over-compaction will hamper revegetation efforts.

MAINTENANCE:

- No maintenance required.

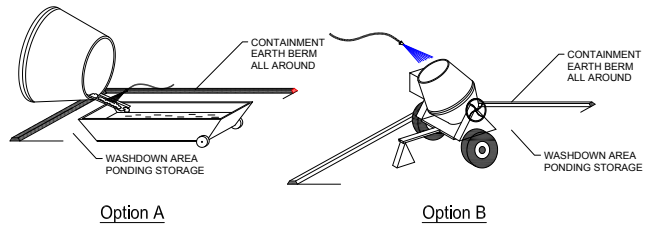

Option A Option B

CONCRETE WASTE MANAGEMENT

Locate 50' from nearest inlet structure

DESCRIPTION:

Prevent or reduce the discharge of pollutants to storm water from concrete waste by conducting washout off-site, performing on-site washout in a designated area, and training employees and subcontractors.

APPLICATION:

This technique is applicable to all types of sites.

INSTALLATION/APPLICATION CRITERIA:

- Store dry materials under cover, away from drainage areas.
- Minimize excess mixing of fresh concrete, mortar or cement on-site.
- Perform washout of concrete trucks off-site or in designated areas only.
- Do not wash out concrete trucks into storm drains, open ditches, streets, or streams.
- Do not allow excess concrete to be dumped on-site, except in designated areas.
- When washing concrete to remove fine particles and expose the aggregate, avoid creating runoff by draining the water within a bermed or level area. (6” tall by 6” wide).
- Train employees and subcontractors in proper concrete waste management.

LIMITATIONS:

- Off-site washout of concrete wastes may not always be possible.

MAINTENANCE:

- Inspect subcontractors to ensure that concrete wastes are being properly managed.
- If using a temporary pit, dispose hardened concrete on a regular basis.

BMP: Construction Road Stabilization

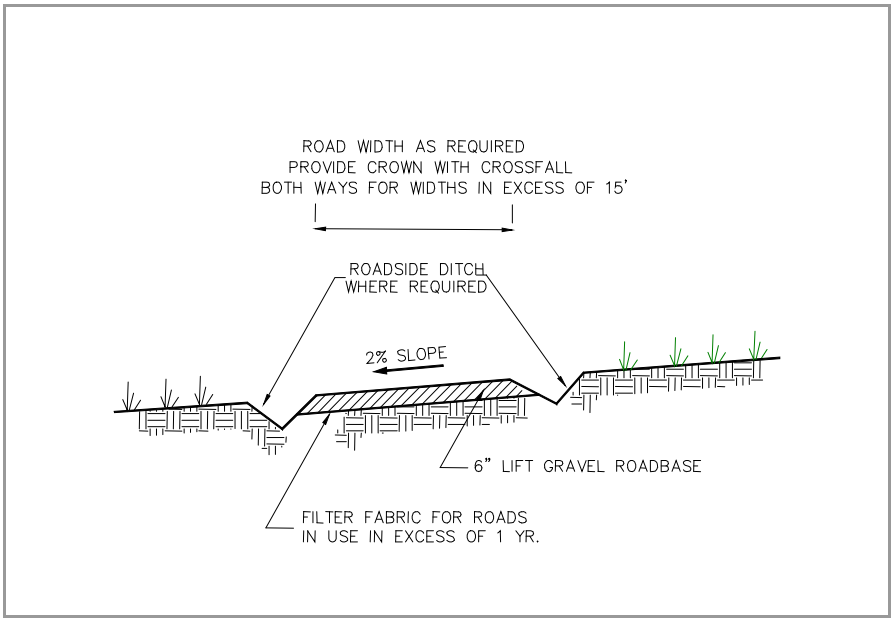

DESCRIPTION:
Temporary stabilization of on-site roadway by placement of gravel roadbase.

APPLICATION:
- On-site roadways used daily by construction traffic (may not apply to gravelly type soils).
- Parking or staging areas susceptible to erosion due to traffic use.

INSTALLATION/APPLICATION CRITERIA:
- Grade temporary access road with 2% cross fall, for two-way width provide crown.
- Provide roadside ditch and outlet controls where required.
- Place 6 inches of 2-inch to 4-inch crushed rock on driving area.

LIMITATIONS:
- May require removal of gravel roadbase at completion of activities if final cover is not impervious.
- May require controls for surface storm water runoff.

MAINTENANCE:
- Inspect after major rainfall events and at least monthly.
- Place additional gravel as needed and repair any damaged areas.
- Maintain any roadside drainage controls.

DESCRIPTION:

Construction sequencing is a specified work schedule that coordinates the timing of land-disturbing activities and the installation of erosion and sediment control measures. Construction site phasing involves disturbing only part of a site at a time to prevent erosion from dormant parts. Grading activities and construction are completed and soils are effectively stabilized on one part of the site before grading and construction commence at another part.

APPLICATIONS:

Sequencing can be used to plan earthwork and erosion and sediment control activities at sites where land disturbances might affect water quality in a receiving waterbody.

INSTALLATION/APPLICATION CRITERIA:

Sequencing schedules should include the following Design and Installation Criteria:

- The erosion & sediment control practices that are to be installed
- Principal development activities
  - Which measures should be installed before other activities are started
  - Compatibility with the general contract construction schedule

LIMITATIONS:

Weather and other unpredictable variables might affect sequence schedules. However, the erosion and sediment control plan should plainly state the proposed schedule and a protocol of making changes due to unforeseen problems.

MAINTENANCE:

Follow the construction sequence throughout the project and modify the written plan before any changes in construction activities are executed. Update the plan if a site inspection indicates the need for additional erosion and sediment control.

Adapted from EPA – Stormwater Menu of BMPs

BMP: Contaminated or Erodible Surface Areas

DESCRIPTION:

Prevent or reduce the discharge of pollutants to stormwater from contaminated or erodible surface areas by leaving as much vegetation on-site as possible, minimizing soil exposure time, stabilizing exposed soils, and preventing stormwater runon and runoff.

APPLICATIONS:

This BMP addresses soils which are not so contaminated as to exceed criteria but the soil is eroding and carrying pollutants off in the stormwater.

INSTALLATION/APPLICATION CRITERIA:

Contaminated or erodible surface areas can be controlled by:

- Preservation of natural vegetation, re-vegetation, chemical stabilization, removal of contaminated soils or geosynthetics.

LIMITATIONS:

Disadvantages of preserving natural vegetation or re-vegetating include:

- Requires substantial planning to preserve and maintain the existing vegetation.
- May not be cost-effective with high land costs.
- Lack of rainfall and/or poor soils may limit the success of re-vegetated areas.
- Disadvantages of chemical stabilization include:
  - Creation of impervious surfaces.
  - May cause harmful effects on water quality.
  - Is usually more expensive than vegetative cover.

MAINTENANCE:

Maintenance should be minimal, except possibly if irrigation of vegetation is necessary.

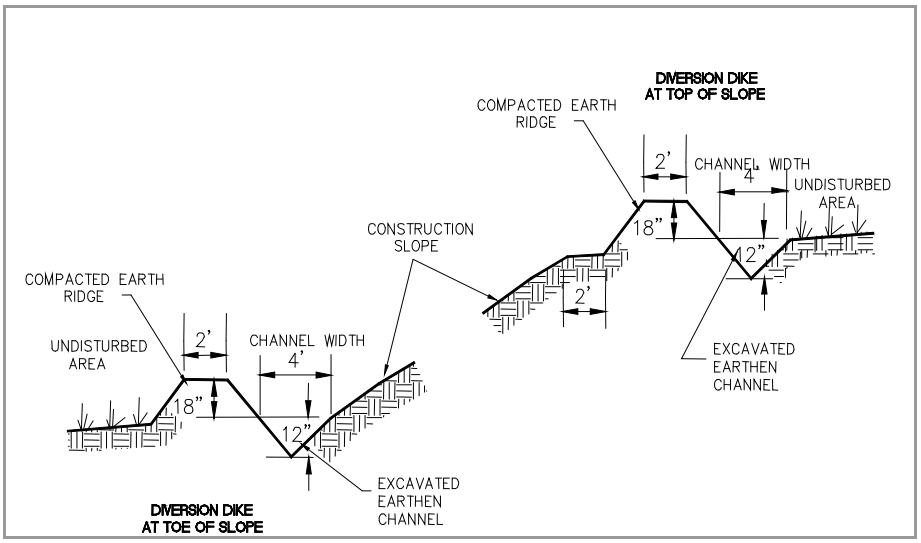

DESCRIPTION:
A temporary sediment barrier and storm runoff conveyance consisting of an excavation channel and compacted earth ridge.

APPLICATION:
- Construct along top of construction slope to intercept upgradient runoff and convey around construction site.
- Construct along toe of construction to divert sediment laden runoff.
- Construct along midpoint of construction slope to intercept runoff and channel to controlled discharge point.
- Construct around base of soil stockpiles to capture sediment.
- Construct around perimeter of disturbed areas to capture sediment.

INSTALLATION/APPLICATION CRITERIA:
- Clear and grub area for dike construction.
- Excavate channel and place soil on downgradient side.
- Shape and machine compact excavated soil to form ridge.
- Place erosion protection (riprap, mulch) at outlet.
- Stabilize channel and ridge as required with mulch, gravel, or vegetative cover.

LIMITATIONS:
- Recommended maximum drainage area of 5 acres.
- Recommended maximum sideslopes of 2h:1v (50%).
- Recommended maximum slope on channel of 1%.

MAINTENANCE:
- Inspect immediately after any rainfall and at least daily during prolonged rainfall.
- Look for runoff breaching dike or eroding channel or sideslopes.
- Check discharge point for erosion or bypassing of flows.
- Repair and stabilize as necessary.
- Inspect daily during vehicular activity on slope, check for and repair any traffic damage.

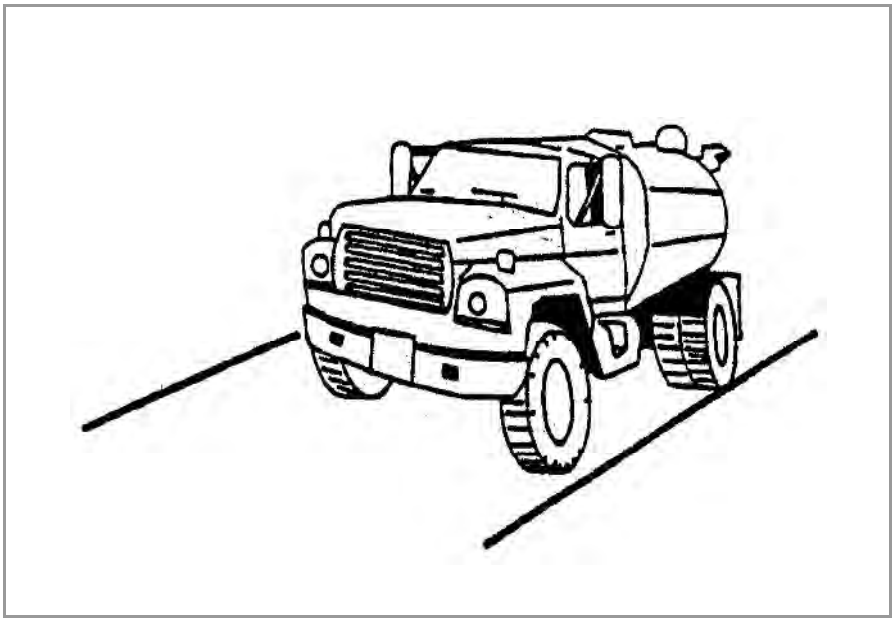

DESCRIPTION:
Dust control measures are used to stabilize soil from wind erosion, and reduce dust by construction activities.

APPLICATION:
Dust control is useful in any process area, loading and unloading area, material handling areas, and transfer areas where dust is generated. Street sweeping is limited to areas that are paved.

INSTALLATION/APPLICATION CRITERIA:
- Mechanical dust collection systems are designed according to the size of dust particles and the amount of air to be processed. Manufacturers' recommendations should be followed for installation (as well as the design of the equipment).
- Two kinds of street weepers are common: brush and vacuum. Vacuum sweepers are more efficient and work best when the area is dry.
- Mechanical equipment should be operated according to the manufacturers' recommendations and should be inspected regularly.

LIMITATIONS:
- Generally more expensive than manual systems.
- May be impossible to maintain by plant personnel (the more elaborate equipment).
- Labor and equipment intensive and may not be effective for all pollutants (street sweepers).

MAINTENANCE:
If water sprayers are used, dust-contaminated waters should be collected and taken for treatment. Areas will probably need to be resprayed to keep dust from spreading.

BMP: Earth Berm Barrier

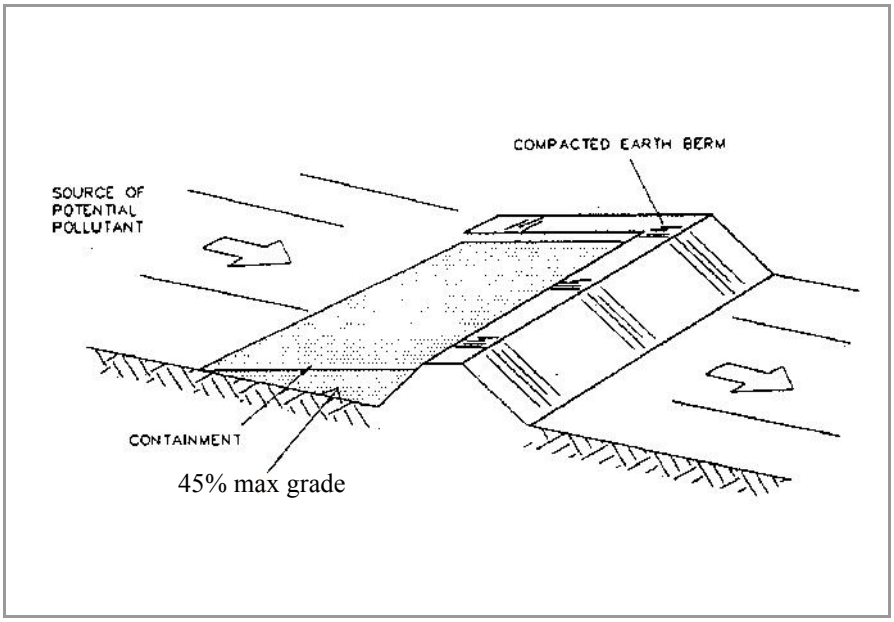

DESCRIPTION:
A temporary containment control constructed of compacted soil.

APPLICATION:
- Construct around waste and materials storage area.
- Construct around staging and maintenance areas.
- Construct around vehicle parking and servicing areas.

INSTALLATION/APPLICATION CRITERIA:
- Construct an earthen berm down hill of the area to be controlled. The berm should surround fueling facilities and maintenance areas on three sides to provide containment.
- Berm needs to be a minimum of 1 foot tall by 1 foot wide and be compacted by earth moving equipment.

LIMITATIONS:
- Not effective on steep slopes.
- Limits access to controlled area.
- Personnel need to quickly respond to spills with remedial actions.

MAINTENANCE:
- Observe daily for any non-stormwater discharge.
- Look for runoff bypassing ends of berms or undercutting berms.
- Repair or replace damaged areas of the berm and remove accumulated sediment.
- Recompact soil around berm as necessary to prevent piping.

BMP: Employee Training

ET
Construction

DESCRIPTION:
Employee training, like equipment maintenance, is a method by which to implement BMPs. Employee training should be used in conjunction with all other BMPs as part of the facility's SWPPP.

The specific employee training aspects of each of the source controls are highlighted in the individual information sheets. The focus of this information sheet is more general, and includes the overall objectives and approach for assuring employee training in stormwater pollution prevention. Accordingly, the organization of this information sheet differs somewhat from the other information sheets in this chapter.

OBJECTIVES:
Employee training should be based on four objectives:

- Promote a clear identification and understanding of the problem, including activities with the potential to pollute stormwater;
- Identify solutions (BMPs);
- Promote employee ownership of the problems and the solutions; and
- Integrate employee feedback into training and BMP implementation.

APPROACH:

- Integrate training regarding stormwater quality management with existing training programs that may be required for your business by other regulations.
- Businesses that are not regulated in Federal, State, or local regulations, may use the information in this handbook to develop a training program to reduce their potential to pollute stormwater.
- Employee training is a vital component of many of the individual source control BMPs included in this manual.

BMP: Equipment and Vehicle Wash Down Area

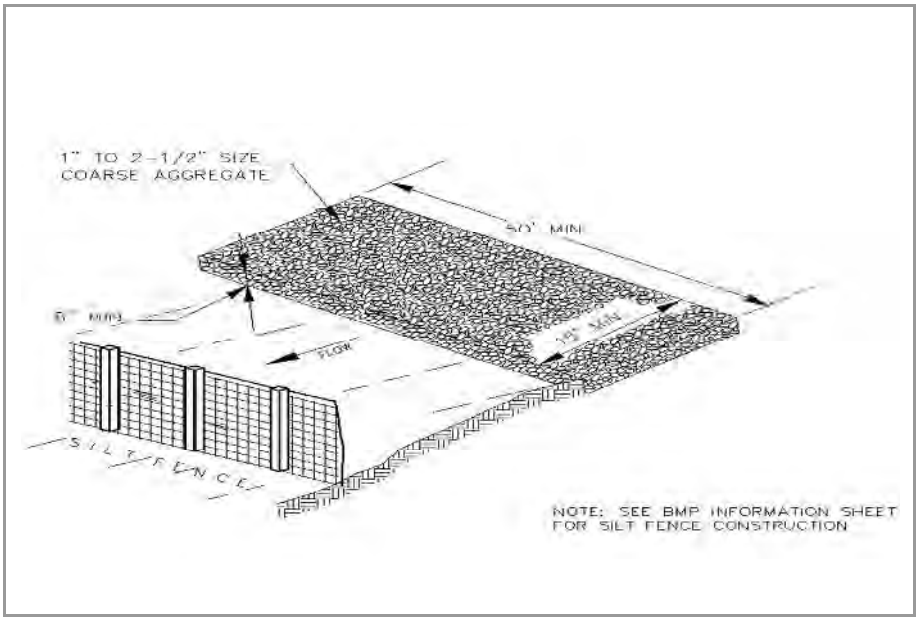

DESCRIPTION:
A stabilized pad of crushed stone for general washing of equipment and construction vehicles.

APPLICATION:
At any site where regular washing of vehicles and equipment will occur. May also be used as a filling point for water trucks limiting erosion caused by overflow or spillage of water.

INSTALLATION:
- Clear and grub area and grade to provide maximum slope of 1%.
- Compact subgrade and place filter fabric if desired (recommended for wash areas to remain in use for more than 3 months.
- Place coarse aggregate, 1 to 2-1/2 inches in size, to a minimum depth of 8-inches.
- Install silt fence downgradient (see silt fence BMP information sheet).

LIMITATIONS:
Cannot be utilized for washing equipment or vehicles that may cause contamination of runoff such as fertilizer equipment or concrete equipment. Solely used to control sediment in wash water.

MAINTENANCE:
- Inspect daily for loss of gravel or sediment buildup.
- Inspect adjacent area for sediment deposit and install additional controls as necessary.
- Repair area and replace gravel as required to maintain control in good working condition.
- Expand stabilized area as required to accommodate activities.
- Maintain silt fence as outlined in specific silt fence BMP information sheet.

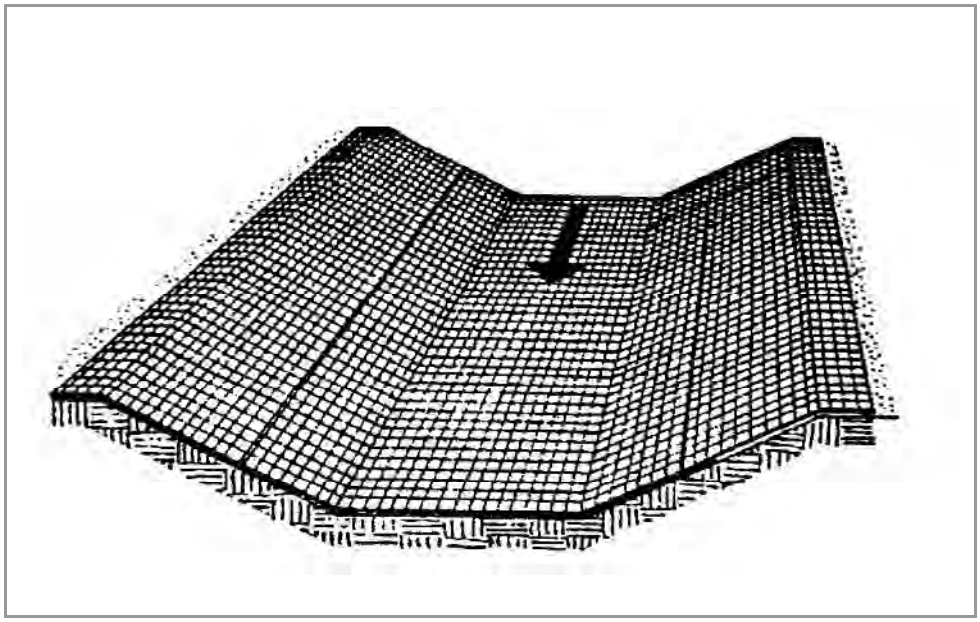

DESCRIPTION:
Erosion control blankets are used in place of mulch on areas of high velocity runoff and/or steep grade, to aid in controlling erosion on critical areas by protecting young vegetation.

APPLICATIONS:
- Where vegetation is likely to grow too slowly to provide adequate cover.
- In areas subject to high winds where mulch would not be effective.

INSTALLATION/APPLICATION CRITERIA:
- Install erosion control blankets parallel to the direction of the slope.
- In ditches, apply in direction of the flow.
- Place erosion control blankets loosely on soil - do not stretch.
- Ends of blankets should be buried no less than six inches deep.
- Staple the edges of the blanket at least every three feet.

LIMITATIONS:
Not recommended in areas which are still under construction.

MAINTENANCE:
- Check for erosion and undermining periodically, particularly after rainstorms.
- Repair dislocations or failures immediately.
- If washouts occur, reinstall after repairing slope damage.
- Monitor until permanently stabilized.

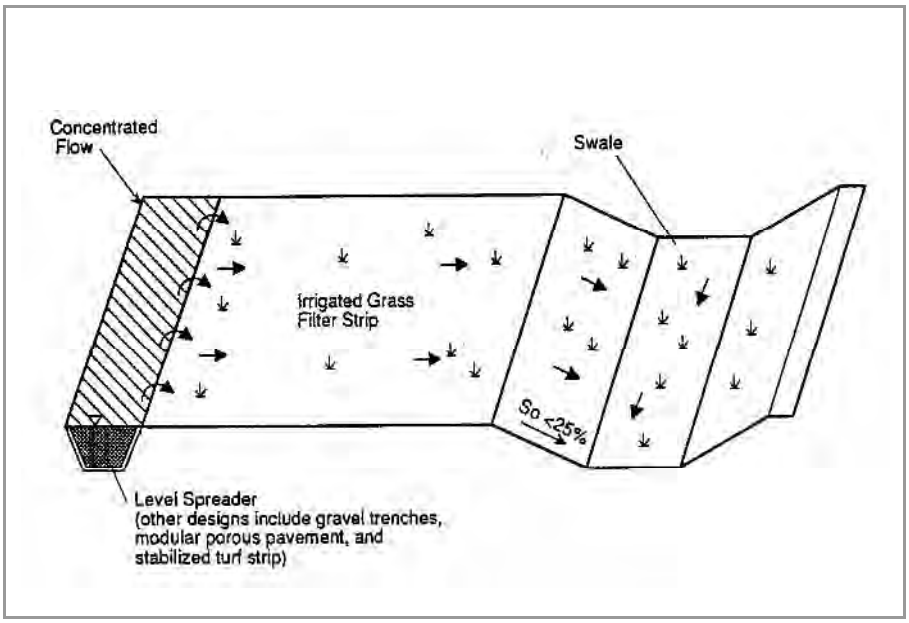

DESCRIPTION:
Filter strips are 20-foot-wide strips of natural or planted vegetation around a construction site. They are designed to cause deposition of sediments within the vegetation layer.

APPLICATIONS:
- Suited for areas where the soils are well drained or moderately well drained.
- Areas where the bedrock and the water table are well below the surface.

INSTALLATION/APPLICATION CRITERIA:
- Make sure the vegetative cover is dense enough to protect underlying soil while causing sediment to settle.
- Filter strip must be approximately 20 feet wide to function well.
- The length should be approximately 50 to 75 feet. Where slopes become steeper the length of the strip must be increased.

LIMITATIONS:
- Only applicable in areas where vegetation is previously established or where sod is added.
- Vegetated filter strips will not function well on steep slopes, in hilly areas, or in highly paved areas.
- Sites with slopes of 15 percent or more may not be suitable for filtering storm water flows.

MAINTENANCE:
- Check for channels and repair.
- Provide rock aprons to aid in slowing flow if necessary.
- Maintain vegetation at optimal height and thickness.

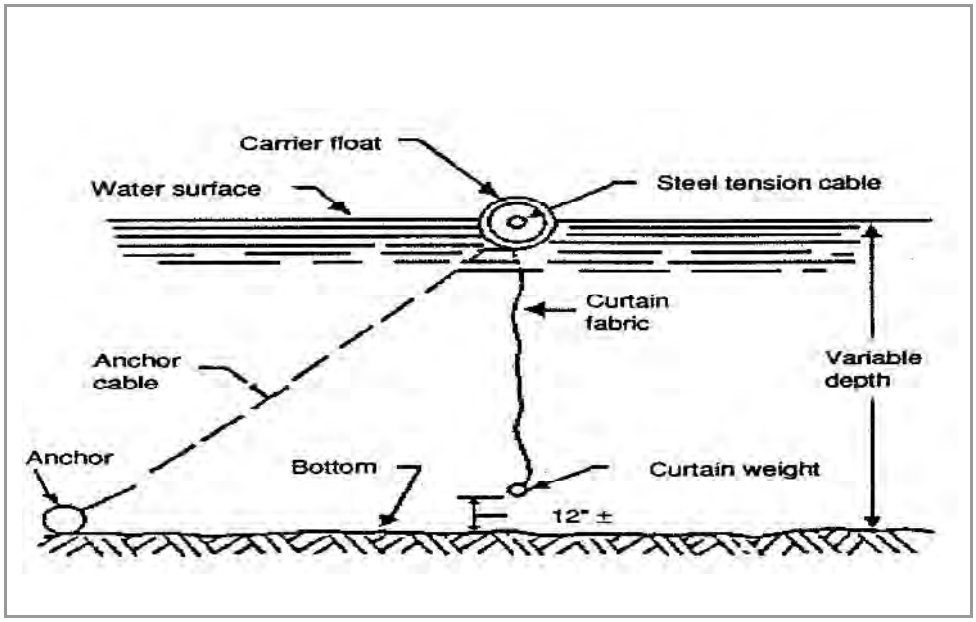

DESCRIPTION:
A flotation silt curtain is a silt barrier for use within a lake or pond. The flotation silt curtain consists of a filter fabric curtain weighted at the bottom and attached to a flotation device at the top. This structure is used to isolate an active construction area within a lake or pond to prevent silt-laden water from migrating out of the construction zone.

APPLICATIONS:
Where construction is conducted within a lake or pond area.

INSTALLATION/APPLICATION CRITERIA:
- The curtain should be constructed of a nylon fabric with a minimum tensile strength of 300 pounds per inch of fabric.
- The top of the curtain should have a flotation carrier consisting of a floating plastic tube (6-inch minimum diameter) filled with marine quality polyethylene foam. The flotation carrier should also have a 5/16" diameter coated steel cable in it to carry loads imposed upon the curtain.
- The bottom edge should be weighted by cable or chain with a minimum weight of 1.1 pounds per foot.
- One 24-pound anchor should be used per 100 feet of curtain.
- Where the curtain is made up of sections, the sections should be joined so that silt cannot permeate through the connection.

LIMITATIONS:
Not recommended in very shallow water bodies.

MAINTENANCE:
The silt curtain should be maintained until the construction area is stabilized and turbidity is reduced to acceptable levels.

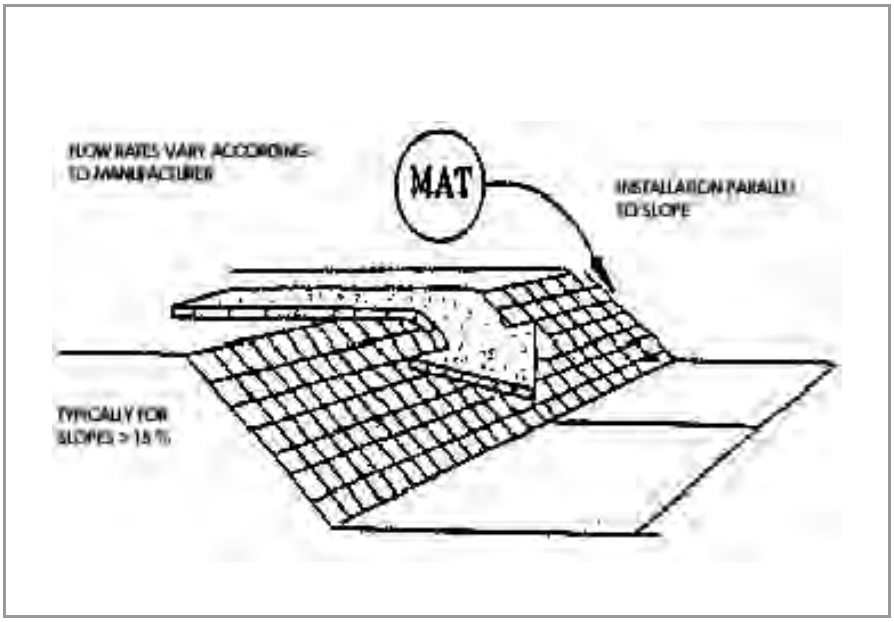

DESCRIPTION:
Mattings made of natural or synthetic material which are used to temporarily or permanently stabilize soil.

APPLICATION:
- Typically suited for post-construction site stabilization, but may be used for temporary stabilization of highly erosive soils.
- Channels and streams.
- Steep slopes.

INSTALLATION/APPLICATION CRITERIA:
- Mattings may be applied to disturbed soils and where existing vegetation has been removed.
- The following organic matting materials provide temporary protection until permanent vegetation is established, or when seasonal circumstances dictate the need for temporary stabilization until weather or construction delays are resolved: Jute mattings and straw mattings.
- The following synthetic mattings may be used for either temporary or post-construction stabilization, both with and without vegetation: excelsior matting, glass fiber matting, mulch matting.
- Staples are needed to anchor the matting.

LIMITATIONS:
- Mattings are more costly than other BMP practices, limiting their use to areas where other BMPs are ineffective (e.g., channels, steep slopes).
- May delay seed germination, due to reduction in soil temperature.
- Installation requires experienced contractor to ensure soil stabilization and erosion protection.

MAINTENANCE:
- Inspect monthly and after significant rainfall.
- Re-anchor loosened matting and replace missing matting and staples as required.

DESCRIPTION:
Prevent or reduce the discharge of pollutants to stormwater from hazardous waste through proper material use, waste disposal, and training of employees and subcontractors.

APPLICATION:
Many of the chemicals used on-site can be hazardous materials which become hazardous waste upon disposal. These wastes may include:

- Paints and solvents;
- Petroleum products such as oils, fuels, and grease;
- Herbicides and pesticides;
- Acids for cleaning masonry; and
- Concrete curing compounds.

In addition, sites with existing structures may contain wastes which must be disposed of in accordance with Federal, State, and local regulations, including:

- Sandblasting grit mixed with lead, cadmium, or chromium-based paints;
- Asbestos; and
- PCBs.

INSTALLATION/APPLICATION CRITERIA:
The following steps will help reduce storm water pollution from hazardous wastes:

- Use all of the product before disposing of the container.
- Do not remove the original product label, it contains important safety and disposal information.
- Do not over-apply herbicides and pesticides. Prepare only the amount needed. Follow the recommended usage instructions. Over-application is expensive and environmentally harmful. Apply surface dressings in several smaller applications, as opposed to one large application, to allow time for infiltration and to avoid excess material being carried off-site by runoff. Do not apply these chemicals just before it rains. People applying pesticides must be certified in accordance with Federal and State regulations.

LIMITATIONS:
Hazardous waste that cannot be reused or recycled must be disposed of by a licensed hazardous waste hauler.

MAINTENANCE:

- Inspect hazardous waste receptacles and area regularly.
- Arrange for regular hazardous waste collection.

DESCRIPTION:
A combination of wood fiber mulch, processed grass, or hay or straw mulch and a tacking agent. It is made into a slurry, then applied to bare slopes or other bare areas to provide temporary stabilization.

APPLICATIONS:
- Small roadside slopes.
- Large, relatively flat areas.

Installation/Application Criteria:
- Legume seeds should be pellet inoculated with the appropriate bacteria.
- The seed should not remain in the hydromulcher tank for more than 30 minutes.
- Wood fiber may be dyed to aid in uniform application.
- Slurry should be uniformly applied until an adequate coverage is achieved.
- The applicator should not be directed at one location for a long period of time; erosion will occur.

LIMITATIONS:
- Will lose effectiveness after 1 year.
- Can use only on physically stable slopes (at natural angle of repose, or less).

MAINTENANCE:
- Periodically inspect for damage caused by wind, water, or human disturbance.
- Promptly repair damaged areas.

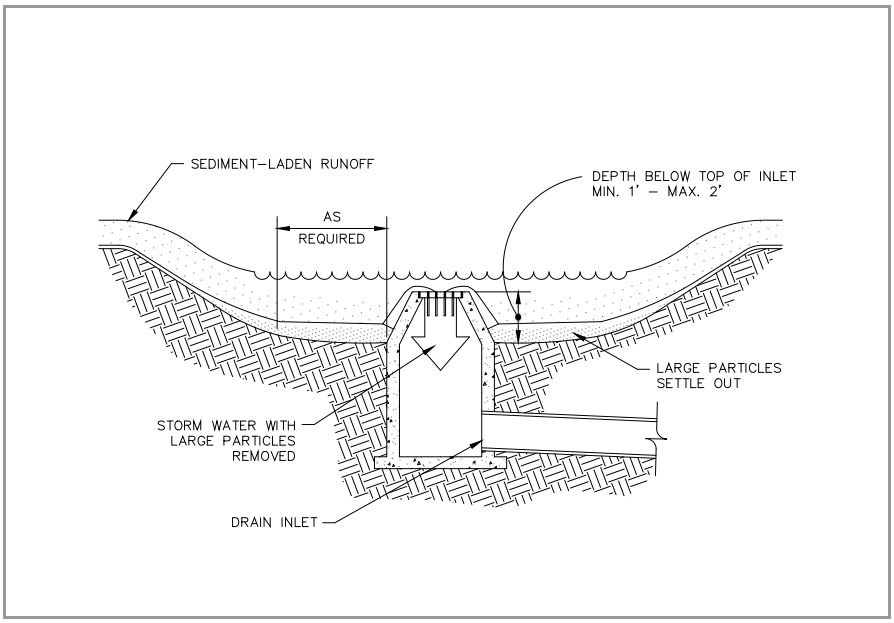

DESCRIPTION:
An area excavated around a storm drain inlet to impound water below the inlet.

APPLICATION:
Construct at storm drainage inlets located downgradient of areas to be disturbed by construction (for inlets in paved areas see other information sheets for inlet protection).

INSTALLATION/APPLICATION CRITERIA:
- Provide upgradient sediment controls, such as silt fence during construction of inlet.
- When construction of inlet is complete, excavate adjacent area 1 to 2 feet lower than the grate elevation. Size of excavated area should be based on soil type and contributing acreage.

LIMITATIONS:
- Recommended maximum contributing drainage area of one acre.
- Limited to inlets located in open unpaved areas.
- Requires flat area adjacent to inlet.

MAINTENANCE:
- Inspect inlet protection following storm event and at a minimum of once monthly.
- Remove accumulated sediment when it reaches one half of the excavated sump below the grate.
- Repair side slopes as required.

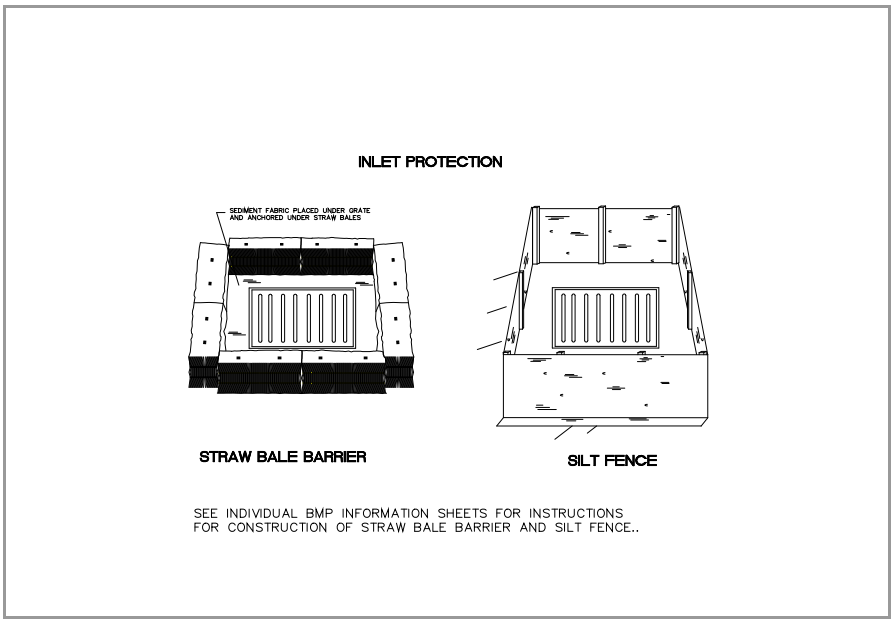

DESCRIPTION:
Sediment barrier erected around storm drain inlet.

APPLICATION:
Construct at storm drainage inlets located downgradient of areas to be disturbed by construction (for inlets in paved areas see other information sheets for inlet protection).

INSTALLATION/APPLICATION CRITERIA:
- Provide upgradient sediment controls, such as silt fence during construction of inlet.
- When construction of inlet is complete, erect straw bale barrier or silt fence surrounding perimeter of inlet. Follow instructions and guidelines on individual BMP information sheets for straw bale barrier and silt fence construction.

LIMITATIONS:
- Recommended maximum contributing drainage area of one acre.
- Limited to inlets located in open unpaved areas.
- Requires shallow slopes adjacent to inlet.

MAINTENANCE:
- Inspect inlet protection following storm event and at a minimum of once monthly.
- Remove accumulated sediment when it reaches 4-inches in depth.
- Repair or realign barrier/fence as needed.
- Look for bypassing or undercutting and recompact soil around barrier/fence as required.

BMP: Inlet Protection – Wattle

IP-W
CONSTRUCTION

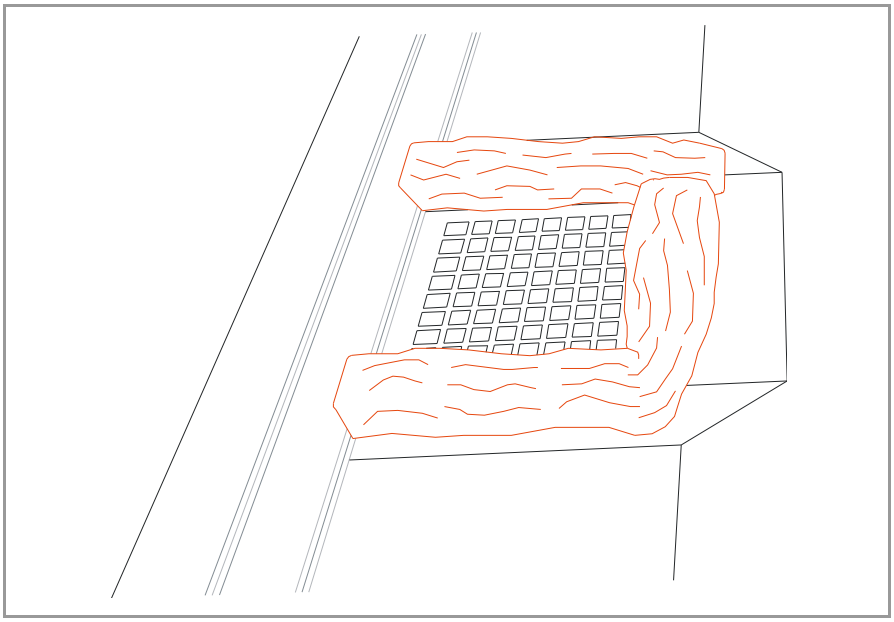

DESCRIPTION:

Sediment barrier erected around storm drain inlet.

APPLICATION:

Construct at storm drainage inlets located down-gradient of areas to be disturbed by construction.

INSTALLATION/APPLICATION CRITERIA:

- Provide up-gradient sediment controls, such as silt fence during construction of inlet
- When construction of curb and gutter and roadways is complete, install gravel filled wattles around perimeter of inlet

LIMITATIONS:

- Recommended maximum contributing drainage area of one acre
- Requires shallow slopes adjacent to inlet

MAINTENANCE:

- Inspect inlet protection following storm event and at a minimum of once every 14 days.
- Remove accumulated sediment when it reaches 4 inches in depth.
- Look for bypassing or undercutting and repair or realign as needed.

DESCRIPTION:

Stormwater control BMPs need regular inspections to ensure their effectiveness, and is required by the DWQ construction permit. Routine inspections are required on a bi-weekly basis; before and after anticipated storm events. Proper maintenance is crucial to compliance with the permit and to minimize erosion.

Routine inspections help to ensure the integrity and effectiveness of BMPs; inspections prior to a rain event ensure that BMPs are cleaned out and operating properly; inspections following a rain event serve to prepare the site for the next event. Maintenance should be conducted when problems are identified.

APPLICATIONS:

Inspections and maintenance is required by the DWQ permit at all sites. Maintenance needs are best determined by a self-inspection program.

INSTALLATION/APPLICATION CRITERIA:

The person responsible for the inspections should be trained in the design and operation of the BMPS.

LIMITATIONS:

Construction site operators should allocate adequate time and resources for BMP maintenance and repair.

Adapted from EPA – Stormwater Menu of BMPs

DESCRIPTION:

Land grading involves reshaping the ground surface to planned grades as determined by an engineering survey, evaluation, and layout. Land grading provides more suitable topography for buildings, facilities, and other land uses and helps to control surface runoff, soil erosion, and sedimentation during and after construction.

APPLICATIONS:

Land grading is applicable to sites with uneven or steep topography or easily erodible soils, because it stabilizes slopes and decreases runoff velocity. Grading activities should maintain existing drainage patterns as much as possible.

INSTALLATION/APPLICATION CRITERIA:

Before grading activities begin, a construction site operator must make decisions regarding the steepness of cut-and-fill slopes and how the slopes will be: Protected from runoff, stabilized and maintained.

LIMITATIONS:

Improper grading practices that disrupt natural stormwater patterns might lead to poor drainage, high-runoff velocities, and increased peak flows during storm events. Clearing and grading the entire site without vegetated buffers promotes offsite transport of sediments and other pollutants. Design the grading plan with erosion and sediment control and stormwater management goals in mind; to ensure that the plan is implemented as intended, carefully supervise grading crews.

MAINTENANCE:

- Check all graded areas and supporting erosion and sediment control practices periodically, especially after heavy rainfalls.
- Promptly remove all sediment from diversions or other stormwater conveyances, and if washouts or breaks occur, repair them immediately.
- To prevent small-scale eroded areas from becoming significant gullies, maintain them promptly.

Adapted from EPA – Stormwater Menu of BMPs

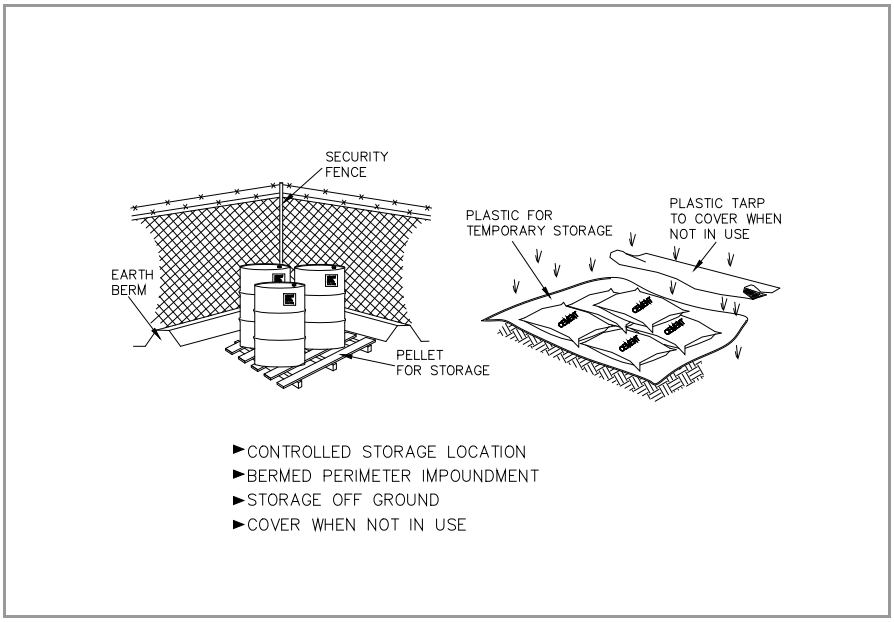

DESCRIPTION:
Controlled storage of on-site materials.

APPLICATION:
- Storage of hazardous, toxic, and all chemical substances.
- Any construction site with outside storage of materials.

INSTALLATION/APPLICATION CRITERIA:
- Designate a secured area with limited access as the storage location. Ensure no waterways or drainage paths are nearby.
- Construct compacted earthen berm (See Earth Berm Barrier Information Sheet), or similar perimeter containment around storage location for impoundment in the case of spills.
- Ensure all on-site personnel utilize designated storage area. Do not store excessive amounts of material that will not be utilized on site.
- For active use of materials away from the storage area ensure materials are not set directly on the ground and are covered when not in use. Protect storm drainage during use.

LIMITATIONS:
- Does not prevent contamination due to mishandling of products.
- Spill Prevention and Response Plan still required.
- Only effective if materials are actively stored in controlled location.

MAINTENANCE:
- Inspect daily and repair any damage to perimeter impoundment or security fencing.
- Check materials are being correctly stored (i.e. standing upright, in labeled containers, tightly capped) and that no materials are being stored away from the designated location.

BMP: Material Use

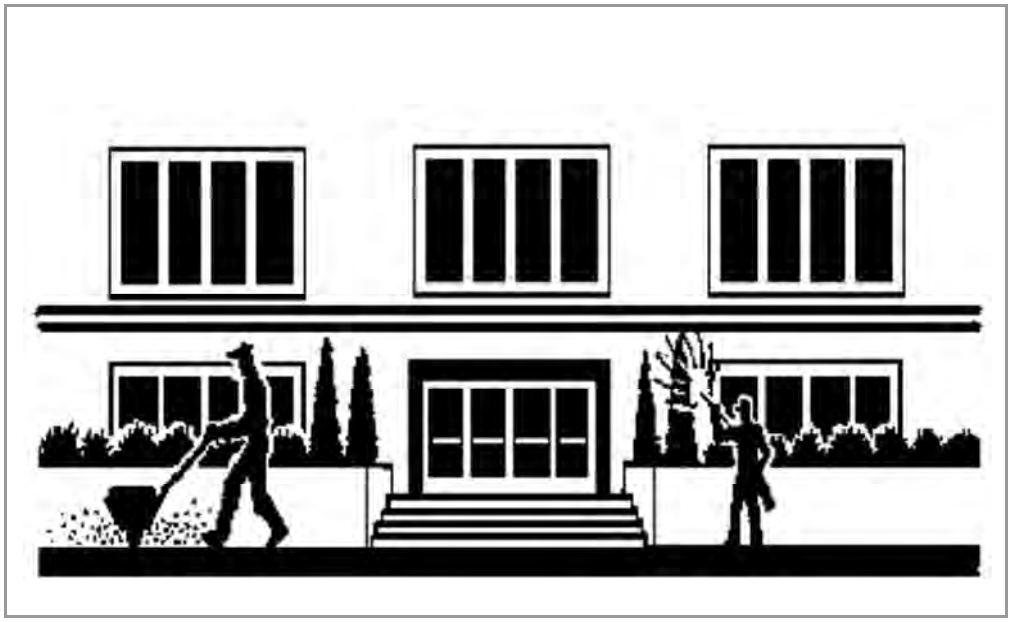

DESCRIPTION:
Prevent or reduce the discharge of pollutants to storm water from material use by using alternative products, minimizing hazardous material use on-site, and training employees and subcontractors.

APPLICATION:
The following materials are commonly used on construction sites:

- Pesticides and herbicides, fertilizers, detergents, plaster and other products, petroleum products such as fuel, oil, and grease.
- Other hazardous chemicals such as acids, lime, glues, paints, solvents, and curing compounds.

INSTALLATION/APPLICATION CRITERIA:

- Use less hazardous, alternative materials as much as possible.
- Minimize use of hazardous materials on-site.
- Use only materials where and when needed to complete the construction activity.
- Follow manufacturer's instructions regarding uses, protective equipment, ventilation, flammability, and mixing of chemicals.
- Personnel who use pesticides should be trained in their use.
- Do not over apply fertilizers, herbicides, and pesticides. Prepare only the amount needed.
- Unless on steep slopes, till fertilizers in to the soil rather than hydroseeding.
- Do not apply these chemicals just before it rains.

LIMITATIONS:
Alternative materials may not be available, suitable, or effective in every case.

MAINTENANCE:
Maintenance of this best management practice is minimal.

DESCRIPTION:
Placement of material such as straw, grass, woodchips, woodfibers or fabricated matting over open area.

APPLICATION:
- Any exposed area to remain untouched longer than 14 days and that will be exposed less than 60 days (seed areas to be exposed in excess of 60 days).
- Areas that have been seeded.
- Stockpiled soil material.

Material	Application	Depth	Comments
Gravel: Washed 1/4" to 1-1/2"	9 cy/1000 sf	3 inches	Good for traffic areas Good for short slopes
Straw: Air-dried, free of seeds and coarse material	2-3 bales /1000 sf	2 inches min.	Subject to wind blowing Tack down or keep moist
Wood Fiber Cellulose: Free from growth inhibitors; dyed green	35 lb/1000 sf	1 inch	For critical areas, double application rate; Limit to slopes < 3% and < 150 feet

INSTALLATION/APPLICATION CRITERIA:
- Roughen area to receive mulch to create depressions that mulch material can settle into.
- Apply mulch to required thickness and anchor as necessary.
- Ensure material used is weed free and does not contain any constituents that will inhibit plant growth.

LIMITATIONS:
- Anchoring may be required to prevent migration of mulch material.
- Downgradient control may be required to prevent mulch material being transported to storm water system.

MAINTENANCE:
- Inspect mulched areas after every rainfall event and at a minimum of monthly.
- Replace mulch on any bare areas and re-anchor as necessary.
- Clean and replace downgradient controls as necessary.

BMP: Outlet Protection

OP
Construction

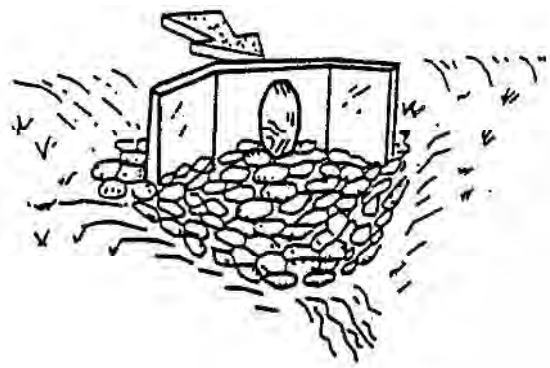

DESCRIPTION:
A rock outlet protection is a physical device composed of rock, grouted riprap, or concrete rubble which is placed at the outlet of a pipe to prevent scour of the soil caused by high pipe flow velocities, and to absorb flow energy to produce non-erosive velocities.

APPLICATIONS:
- Wherever discharge velocities and energies at the outlets of culverts, conduits, or channels are sufficient to erode the next downstream reach.
- Rock outlet protection is best suited for temporary use during construction because it is usually less expensive and easier to install than concrete aprons or energy dissipators.
- A sediment trap below the pipe outlet is recommended if runoff is sediment laden.
- Permanent rock riprap protection should be designed and sized by the engineer as part of the culvert, conduit or channel design.
- Grouted riprap should be avoided in areas of freeze and thaw because the grout will break up.

INSTALLATION/APPLICATION CRITERIA:
Rock outlet protection is effective when the rock is sized and placed properly. When this is accomplished, rock outlets do much to limit erosion at pipe outlets. Rock size should be increased for high velocity flows. Best results are obtained when sound, durable, angular rock is used.

LIMITATIONS:
- Large storms often wash away the rock outlet protection and leave the area susceptible to erosion.
- Sediment captured by the rock outlet protection may be difficult to remove without removing the rock.
- Outlet protection may negatively impact the channel habitat.

MAINTENANCE:
- Inspect after each significant rain for erosion and/or disruption of the rock, and repair immediately.
- Grouted or wire-tied rock riprap can minimize maintenance requirements.

BMP: Portable Toilets

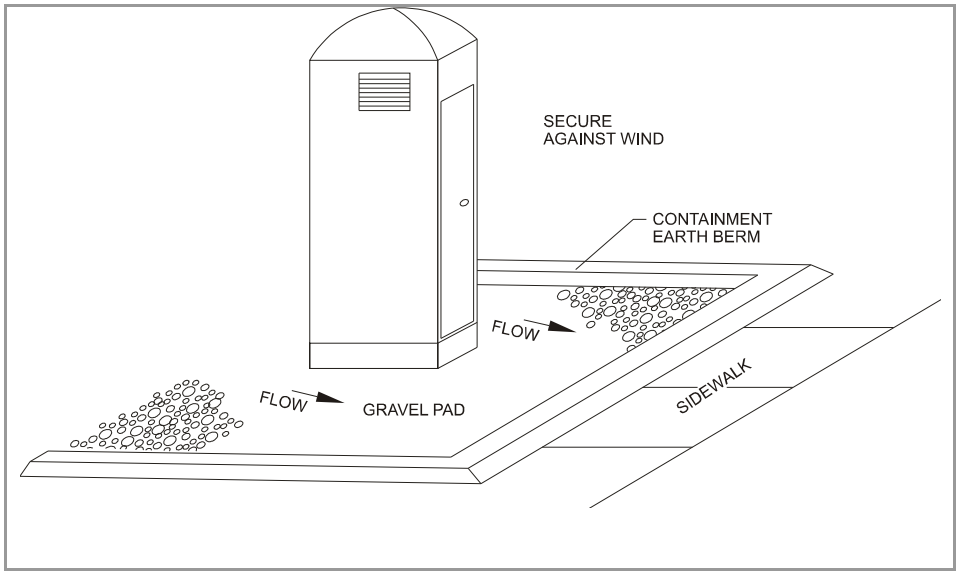

DESCRIPTION:

Temporary on-site sanitary facilities for construction personnel.

APPLICATION:

All sites with no permanent sanitary facilities or where permanent facility is too far from activities.

INSTALLATION/APPLICATION CRITERIA:

- Locate portable toilets in convenient locations throughout the site.
- Prepare level, gravel surface and provide clear access to the toilets for servicing and for on-site personnel.
- Construct earth berm perimeter (6” tall by 6” wide), control for spill/protection leak.

LIMITATIONS:

- No limitations.

MAINTENANCE:

- Portable toilets should be maintained in good working order by licensed service with daily observation for leak detection.
- Regular waste collection should be arranged with licensed service.
- All waste should be deposited in sanitary sewer system for treatment with appropriate agency approval.

BMP: Preservation of Existing Vegetation

PEV
Construction

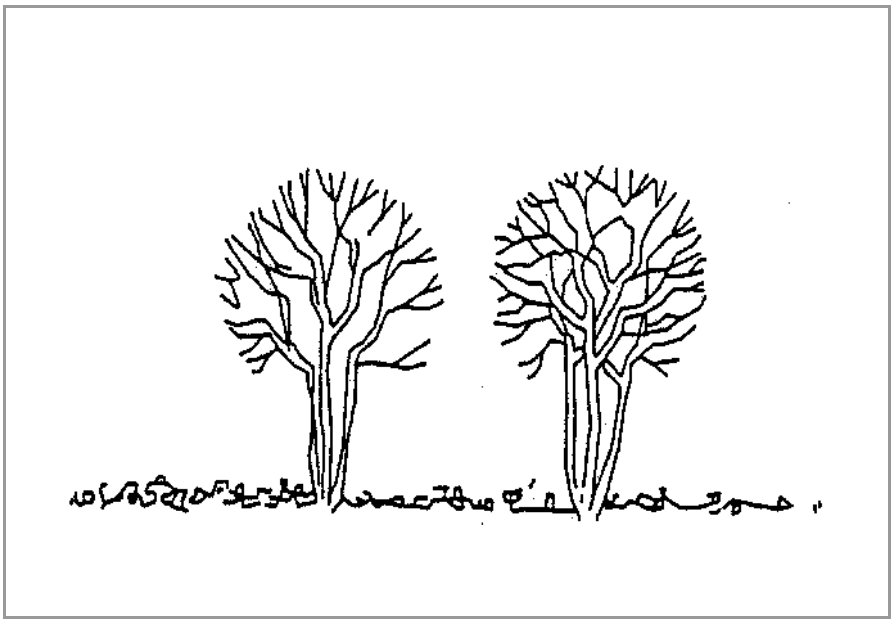

DESCRIPTION:
Carefully planned preservation of existing vegetation minimizes the potential of removing or injuring existing trees, vines, shrubs and/or grasses that serve as erosion controls.

APPLICATIONS:
This technique is applicable to all types of sites. Areas where preserving vegetation can be particularly beneficial are floodplains, wetlands, stream banks, steep slopes, and other areas where erosion controls would be difficult to establish, install, or maintain.

INSTALLATION/APPLICATION CRITERIA:
- Clearly mark, flag or fence vegetation or areas where vegetation should be preserved.
- Prepare landscaping plans which include as much existing vegetation as possible and state proper care during and after construction.
- Define and protect with berms, fencing, signs, etc. a setback area from vegetation to be preserved.
- Propose landscaping plans which do not include plant species that compete with the existing vegetation.
- Do not locate construction traffic routes, spoil piles, etc. where significant adverse impact on existing vegetation may occur.

LIMITATIONS:
- Requires forward planning by the owner/developer, contractor and design staff.
- For sites with diverse topography, it is often difficult and expensive to save existing trees while grading the site satisfactorily for the planned development.
- May not be cost effective with high land costs.

MAINTENANCE:
- Inspection and maintenance requirements for protection of vegetation are low.
- Maintenance of native trees or vegetation should conform to landscape plan specifications.

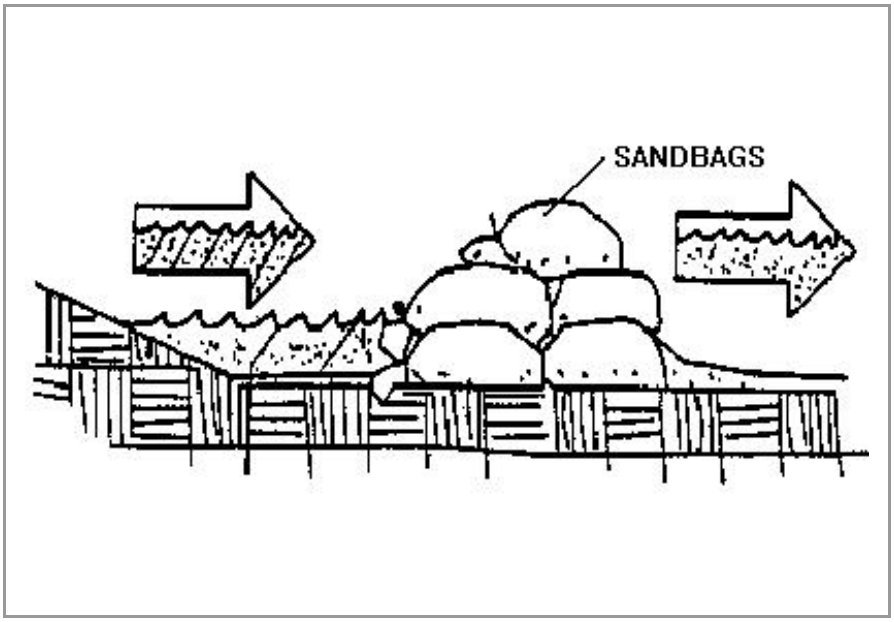

DESCRIPTION:
Stacking sandbags along a level contour creates a barrier which detains sediment-laden water, ponding water upstream of the barrier and promoting sedimentation.

APPLICATION:
- Along the perimeter of the site.
- May be used in drainage areas up to 5 acres.
- Along streams and channels
- Across swales with small catchments.
- Around temporary spoil areas.
- Below the toe of a cleared slope.

INSTALLATION/APPLICATION CRITERIA:
- Install along a level contour.
- Base of sandbag barrier should be at least 48 inches wide.
- Height of sandbag barrier should be at least 18 inches high.
- 4 inch PVC pipe may be installed between the top layer of sand bags to drain large flood flows.
- Provide area behind barrier for runoff to pond and sediment to settle.
- Place below the toe of a slope.

LIMITATIONS:
- Sandbags are more expensive than other barriers, but also more durable.
- Burlap should not be used.

MAINTENANCE:
- Inspect after each rain.
- Reshape or replace damaged sandbags immediately.
- Replace sediment when it reaches six inches in depth.

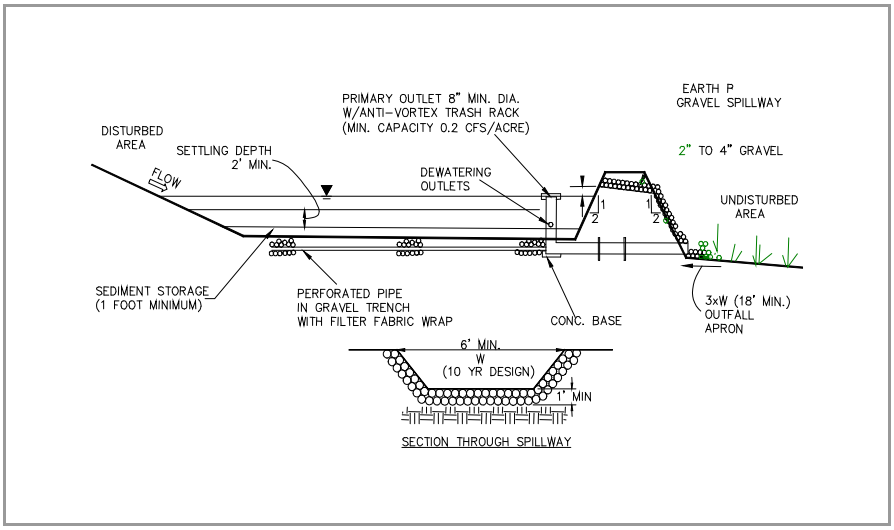

DESCRIPTION:
A pond created by excavation or construction of an embankment, and designed to retain or detain runoff sufficiently to allow excessive sediment to settle.

APPLICATION:
- At the outlet of all disturbed watersheds 10 acres or larger.
- At the outlet of smaller disturbed watersheds, as necessary.
- Where post construction detention basins will be located.

INSTALLATION/APPLICATION CRITERIA:
- Design basin for site specific location, maintain effective flow length 2 times width.
- Excavate basin or construct compacted berm containment, ensure no downgradient hazard if failure should occur. (Provide minimum of 67 cy. per acre of drainage area).
- Construct dewatering and outfall structure and emergency spillway with apron.

LIMITATIONS:
- Should be sized based on anticipated runoff, sediment loading and drainage area size.
- May require silt fence at outlet for entrapment of very fine silts and clays.
- May require safety fencing to prevent public access.
- Height restrictions for embankment may be regulated.

MAINTENANCE:
- Inspect after each rainfall event and at a minimum of monthly.
- Repair any damage to berm, spillway or sidewalls.
- Remove accumulated sediment as it reaches 2/3 height of available storage.
- Check outlet for sedimentation/erosion of downgradient area and remediate as necessary. Install silt fence if sedimentation apparent.

BMP: Sediment Trap

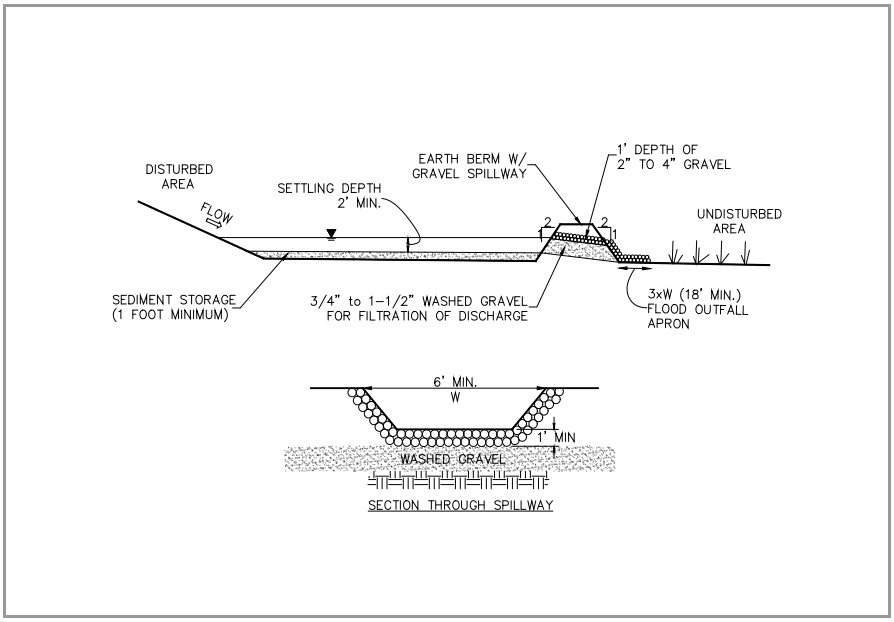

DESCRIPTION:
A sediment trap is a small excavated or bermed area where runoff from small drainage areas is detained and sediment can settle.

APPLICATION:
- Temporary control for runoff from disturbed areas of less than 3 acres.
- Temporary control for discharge from diversion dike, surface benching, or other temporary drainage measures.

INSTALLATION/APPLICATION CRITERIA:
- Design basin for site specific location.
- Excavate basin or construct compacted berm containment.
- Construct outfall spillway with apron.
- Provide downstream silt fence if necessary.

LIMITATIONS:
- Should be sized based on anticipated runoff, sediment loading and drainage area size.
- May require silt fence at outlet for entrapment of very fine silts and clays.

MAINTENANCE:
- Inspect after each rainfall event and at a minimum of monthly.
- Repair any damage to berm, spillway or sidewalls.
- Remove accumulated sediment as it reaches 2/3 height of available storage.
- Check outlet for sedimentation/erosion of downgradient area and remediate as necessary. Install silt fence if sedimentation apparent.

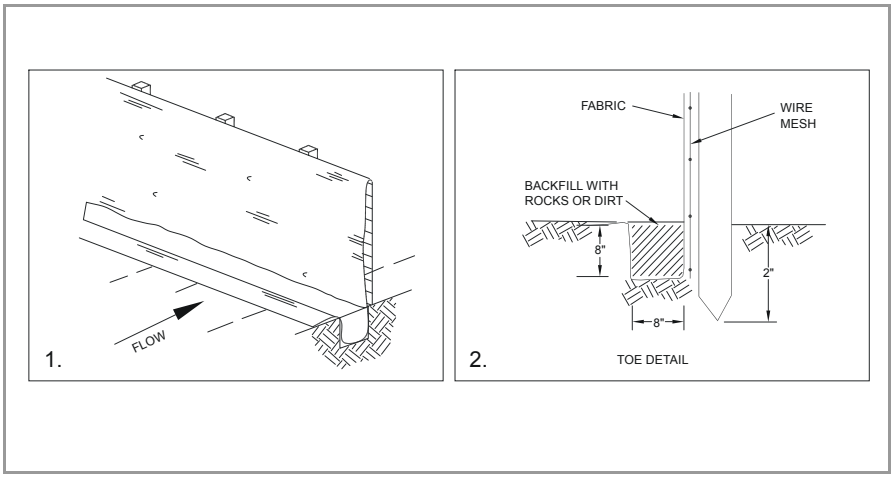

DESCRIPTION:

A temporary sediment barrier consisting of entrenched filter fabric stretched across and secured to supporting posts.

Application:

- Perimeter control: place barrier at down-gradient limits of disturbance
- Sediment barrier: place barrier at toe of slope or soil stockpile
- Protection of existing waterways: place barrier at top of stream bank
- Inlet protection: place fence surrounding catchbasins

INSTALLATION/APPLICATION CRITERIA:

- Place posts 6 feet apart on center along contour (or use preassembled unit) and drive 2 feet minimum into ground. Excavate an anchor trench immediately up-gradient of posts.
- Secure wire mesh (14 gage min. with 6-inch openings) to upslope side of posts. Attach with heavy duty 1 inch long wire staples, tie wires or hog rings.
- Cut fabric to required width, unroll along length of barrier and drape over barrier. Secure fabric to mesh with twine, staples, or similar, with trailing edge extending into anchor trench.
- Backfill trench over filter fabric to anchor.

LIMITATIONS:

- Recommended maximum drainage area of 0.5 acre per 100 feet of fence
- Recommended maximum up-gradient slope length of 150 feet
- Recommended maximum uphill grade of 2:1 (50%)
- Recommended maximum flow rate of 0.5 cfs
- Ponding should not be allowed behind fence

MAINTENANCE:

- Inspect immediately after any rainfall and at least daily during prolonged rainfall.
- Look for runoff bypassing ends of barriers or undercutting barriers.
- Repair or replace damaged areas of the barrier and remove accumulated sediment.
- Reanchor fence as necessary to prevent shortcutting.
- Remove accumulated sediment when it reaches ½ the height of the fence.

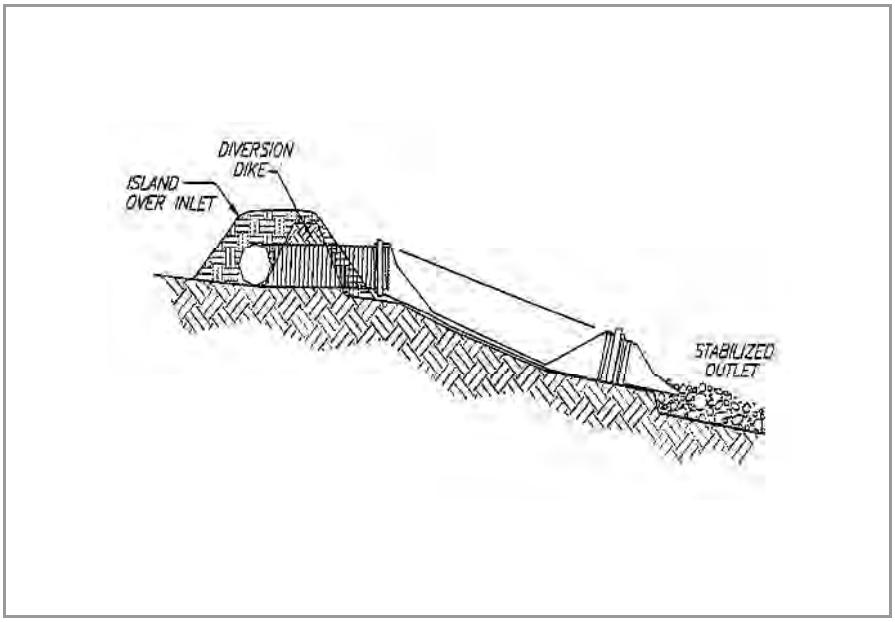

DESCRIPTION:
A temporary pipe or lined channel that drains the top of a slope to a stable discharge point at the bottom of a slope without causing erosion.

APPLICATIONS:
- Where concentrated flow of surface runoff must be conveyed down a slope in order to prevent erosion.
- Drainage for top slope diversion dikes or swales.
- Emergency spillway for a sediment basin.
- Drainage for top of cut/fill slopes where water can accumulate.

INSTALLATION/APPLICATION CRITERIA:
- Secure inlet and surround with dikes to prevent gully erosion, and anchor pipe to slope.
- Size to convey at least the peak of a 10-year, storm event.
- Stabilize outlet. (See Outlet Protection BMP).

LIMITATIONS:
- Maximum drainage area per slope drain is 5 acres.
- Clogged slope drains will force water around the pipe and cause slope erosion.
- Dissipation of high flow velocities at the pipe outlet is required to avoid downstream erosion.
- Failure can result in flooding and severe erosion.

MAINTENANCE:
- Structure must be inspected weekly and after storms.
- Inlet must be free of undercutting and no water should circumvent the entry.
- Outlet should not produce erosion; velocity dissipators must be maintained.
- Pipe anchors must be checked to ensure that the pipe remains anchored to the slope.

DESCRIPTION:
Practices to clean-up leakage/spillage of on-site materials that may be harmful to receiving waters.

APPLICATION:
All sites

GENERAL:
- Store controlled materials within a storage area.
- Educate personnel on prevention and clean-up techniques.
- Designate an Emergency Coordinator responsible for employing preventative practices and for providing spill response.
- Maintain a supply of clean-up equipment on-site and post a list of local response agencies with phone numbers.

METHODS:
- Clean-up spills/leaks immediately and remediate cause.
- Use as little water as possible. NEVER HOSE DOWN OR BURY SPILL CONTAMINATED MATERIAL.
- Use rags or absorbent material for clean-up. Excavate contaminated soils. Dispose of clean-up material and soil as hazardous waste.
- Document all spills with date, location, substance, volume, actions taken and other pertinent data.
- Contact the Salt Lake County Health Department (313-6700) for any spill of reportable quantity.

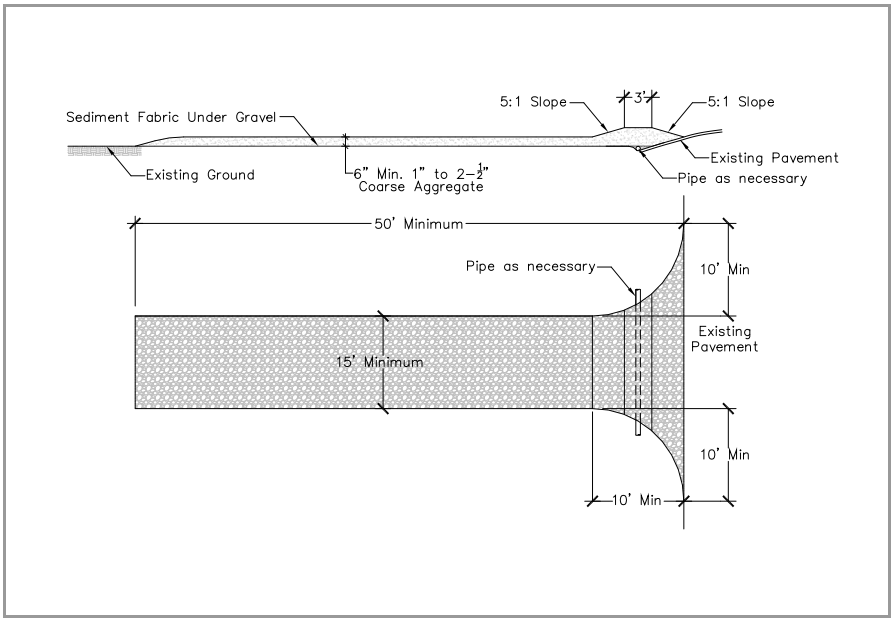

DESCRIPTION:

A stabilized pad of crushed stone located where construction traffic enters or leaves the site from or to paved surface.

APPLICATION:

At any point of ingress or egress at a construction site where adjacent traveled way is paved. Generally applies to sites over 2 acres unless special conditions exist.

INSTALLATION/APPLICATION CRITERIA:

- Clear and grub area and grade to provide maximum slope of 2%.
- Compact subgrade and place filter fabric if desired (recommended for entrances to remain for more than 3 months.
- Place coarse aggregate, 1 to 2-1/2 inches in size, to a minimum depth of 8 inches.

LIMITATIONS:

- Requires periodic top dressing with additional stones.
- Should be used in conjunction with street sweeping on adjacent public right-of-way.

MAINTENANCE:

- Inspect daily for loss of gravel or sediment buildup.
- Inspect adjacent roadway for sediment deposit and clean by sweeping or shoveling.
- Repair entrance and replace gravel as required to maintain control in good working condition.
- Expand stabilized area as required to accommodate traffic and prevent erosion at driveways.

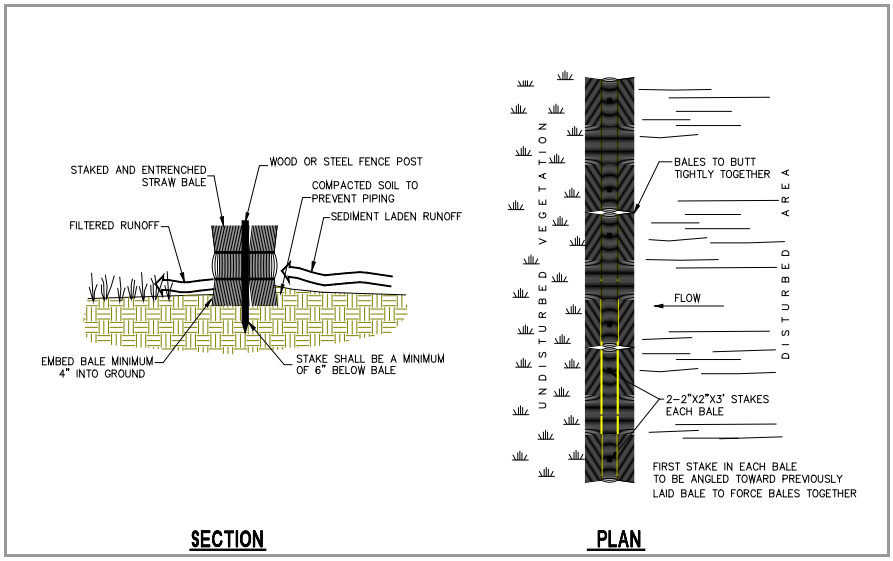

DESCRIPTION:

Temporary sediment barrier consisting of a row of entrenched and anchored straw bales.

APPLICATIONS:

- Perimeter control: place barrier at down-gradient limits of disturbance.
- Sediment barrier: place barrier at toe of slope or soil stockpile.
- Protection of existing waterways: place barrier at top of stream bank.
- Inlet protection.

INSTALLATION/APPLICATION CRITERIA:

- Excavate a 4-inch minimum deep trench along contour line, i.e. parallel to slope, removing all grass and other material that may allow underflow.
- Place bales in trench with ends tightly abutting, fill any gaps by wedging loose straw into openings.
- Anchor each bale with 2 stakes driven flush with the top of the bale.
- Backfill around bale and compact to prevent piping, backfill on uphill side to be built up 4-inches above ground at the barrier.

LIMITATIONS:

- Recommended maximum area of 0.5 acre per 100 feet of barrier
- Recommended maximum up-gradient slope length of 150 feet
- Recommended maximum uphill grade of 2:1 (50%)

MAINTENANCE:

- Inspect immediately after any rainfall and at least daily during prolonged rainfall.
- Look for runoff bypassing ends of barriers or undercutting barriers.
- Repair or replace damaged areas of the barrier and remove accumulated sediment.
- Realign bales as necessary to provide continuous barrier and fill gaps.
- Recompact soil around barrier as necessary to prevent piping.

BMP: Street Sweeping

DESCRIPTION:
Reduce the discharges of pollutants to stormwater from street surfaces by conducting street cleaning on a regular basis.

APPROACH:
- Prioritize cleaning to use the most sophisticated sweepers, at the highest frequency, and in areas with the highest pollutant loading.
- Restrict street parking prior to and during sweeping.
- Increase sweeping frequency just before the rainy season.
- Proper maintenance and operation of sweepers greatly increase their efficiency.
- Keep accurate operation logs to track programs.
- Sweepers effective at removing smaller particles (less than 10 microns) may generate dust that would lead to concerns over worker and public safety.
- Equipment selection can be key for this particular BMP. There are two types used, the mechanical broom sweepers (more effective at picking up large debris and cleaning wet streets), and the vacuum sweepers (more effective at removing fine particles and associated heavy metals). Many communities find it useful to have a compliment of both types in their fleet.

LIMITATIONS:
- Conventional sweepers are not able to remove oil and grease.
- Mechanical sweepers are not effective at removing finer sediments.
- Effectiveness may also be limited by street conditions, traffic congestion, presence of construction projects, climatic conditions and condition of curbs.

MAINTENANCE:
- Replace worn parts as necessary.
- Install main and gutter brooms of the appropriate weight.

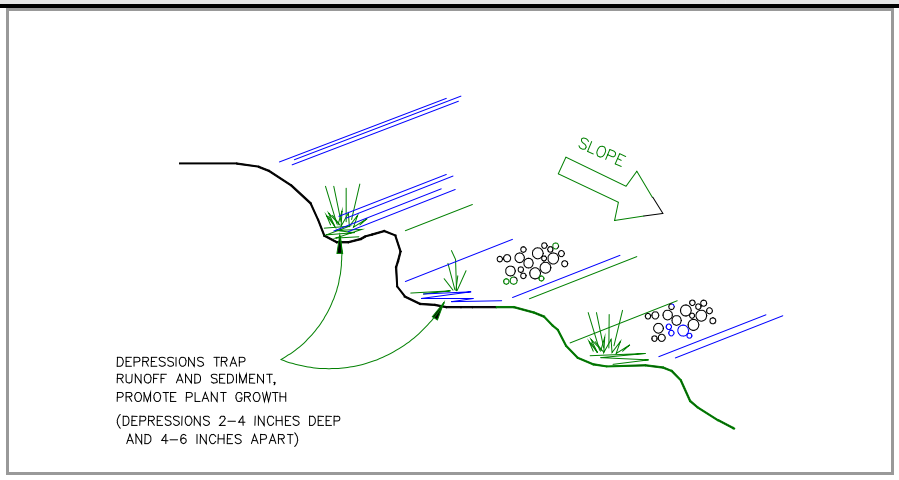

DESCRIPTION:
Rough preparation of working areas leaving depressions and uneven surface. Depressions should be done parallel to contours.

APPLICATION:
Surface roughening is appropriate for all construction that will not be receiving impervious cover within 14 days and that will be exposed less than 60 days (seed areas to be open in excess of 60 days).

INSTALLATION/APPLICATION CRITERIA:
- Surface should be left in rough condition during initial earthwork activity.
- Surfaces that have become smoothed or compacted due to equipment traffic should be roughened by use of disks, spring harrows, teeth on front end loader, or similar, operating along the contours of the slope. Tracking (by crawler tractor driving up and down slope) may also be used to provide depressions parallel to contours.
- Avoid compaction of soils during roughening as this inhibits plant growth and promotes storm water runoff. Limit tracked machinery to sandy soil.
- Seed or mulch areas to be exposed in excess of 60 days.
- Employ dust controls.

LIMITATIONS:
- Will not withstand heavy rainfall.
- Slopes steeper than 2:1 (50%) should be benched.

MAINTENANCE:
- Inspect following any storm event and at a minimum of weekly.
- If erosion in the form of rills (small waterways formed by runoff) is evident, perform machine roughening of area.
- For vegetated slopes reseed areas that are bare or have been reworked.

BMP: Temporary and Permanent Seeding and Planting

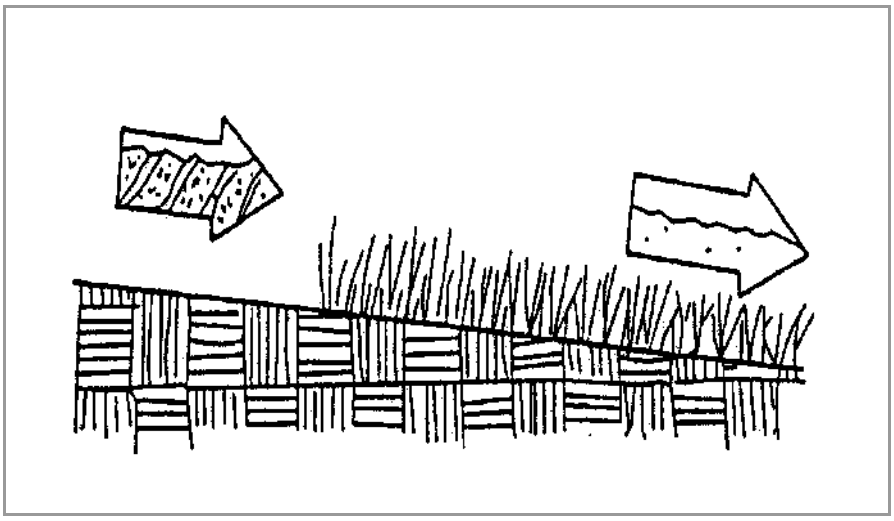

DESCRIPTION:
Seeding of grass and plantings of trees, shrubs, vines and ground covers provide long-term stabilization of soil. In some areas, with suitable climates, grasses can be planted for stabilization.

Temporary seeding - establishment of short term cover by application of rapidly germinating seed mix (alternatively hydro-seeding may be utilized).
Permanent seeding - establishment of final term cover by application of perennial seed mix (alternatively sod may be utilized).

APPLICATION:
- Appropriate for site stabilization both during construction and post-construction.
- Any graded/cleared areas where construction activities have ceased.
- Open space cut and fill areas.
- Steep slopes, spoil piles, vegetated swales, landscape corridors, stream banks.

INSTALLATION/APPLICATION CRITERIA:
Type of vegetation, site and seedbed preparation, planting time, fertilization and water requirements should be considered for each application. The recommended seed mix will be dependent on site specific information such as elevation, exposure, soils, water availability and topography. Appropriate ground preparation and fertilizer must be considered.

LIMITATIONS:
- Permanent and temporary vegetation may not be appropriate in dry periods without irrigation.
- Fertilizer requirements may have potential to create stormwater pollution.

MAINTENANCE:
- Shrubs and trees must be adequately watered and fertilized and if needed pruned.
- Grasses may need to be watered and mowed.
- Provide irrigation as required to establish growth and to maintain plant cover through duration of project.
- Reseed as necessary to provide 75% coverage
- Remediate any areas damaged by erosion or traffic.
- When 75% coverage is achieved inspect monthly for damage and remediate as necessary.

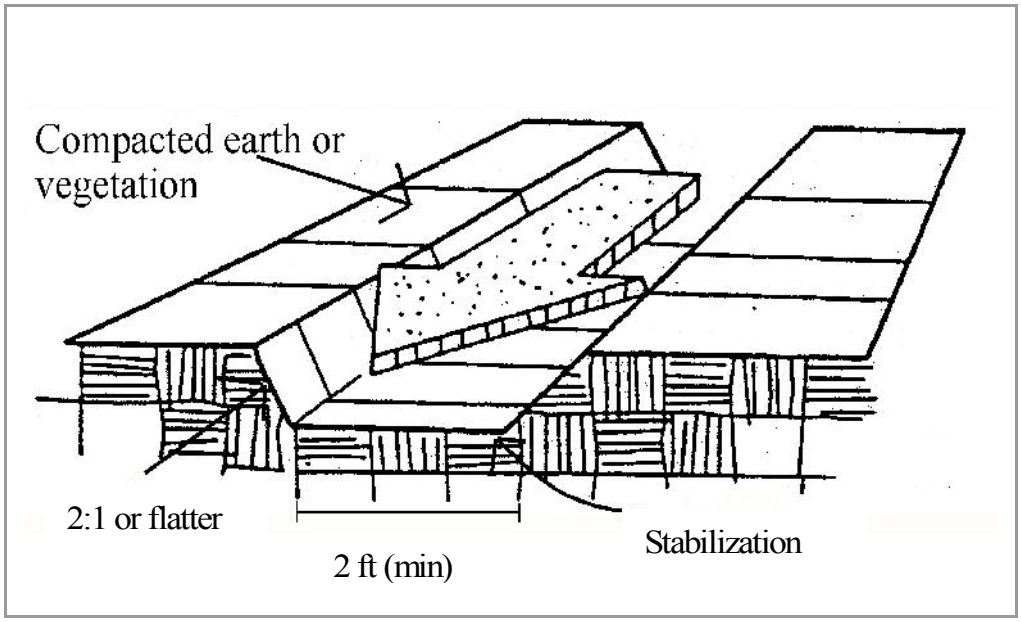

DESCRIPTION:
Temporary drains and swales are used to divert off-site runoff around the construction site, divert runoff from stabilized areas around disturbed areas, and direct runoff into sediment.

APPLICATIONS:
- Temporary drains and swales are appropriate for diverting any upslope runoff around unstabilized or disturbed areas of the construction site.
- Prevent slope failures. Prevent damage to adjacent property. Prevents erosion and transport of sediments into water ways. Increases the potential for infiltration. Diverts sediment-laden runoff into sediment basins or traps.

INSTALLATION/APPLICATION:
- Temporary drainage swales will effectively convey runoff and avoid erosion if built properly:
- Size temporary drainage swales using local drainage design criteria. A permanent drainage channel must be designed by a professional engineer (see the local drainage design criteria for proper design).
- At a minimum, the drain/swale should conform to predevelopment drainage patterns and capacities.
- Construct the drain/swale with an uninterrupted, positive grade to a stabilized outlet. Provide erosion protection or energy dissipation measures if the flow out of the drain or swale can reach an erosive velocity.

LIMITATIONS:
- Temporary drains and swales or any other diversion of runoff should not adversely impact upstream or downstream properties.
- Temporary drains and swales must conform to local floodplain management requirements.

BMP: Temporary Stream Crossing

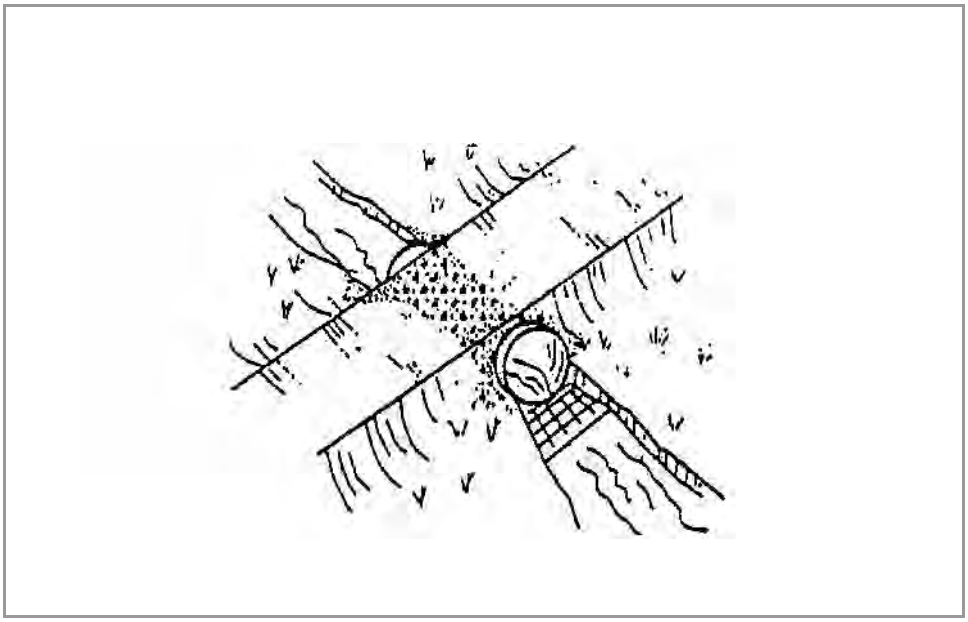

DESCRIPTION:
A temporary access stream crossing is a temporary culvert, ford or bridge placed across a waterway to provide access for construction purposes for a period of less than one year. Temporary access crossings are not intended to be used to maintain traffic for the general public.

APPLICATIONS:
Temporary stream crossings should be installed at all designated crossings of perennial and intermittent streams on the construction site, as well as for dry channels which may be significantly eroded by construction traffic.

INSTALLATION/APPLICATION:
Requires knowledge of stream flows and soil strength and should be designed under the direction of a Utah registered engineer with knowledge of both hydraulics and construction loading requirements for structures.

LIMITATIONS:
- May be an expensive for a temporary improvement.
- Requires other BMP's to minimize soil disturbance during installation and removal.
- Fords should only be used in dry weather.
- A Stream Alteration Permit may be required, contact the Utah Division of Water Rights before implementation.

MAINTENANCE:
- Inspect weekly and after each significant rainfall, including assessment of foundations.
- Periodically remove silt from crossings.
- Replace lost aggregated from inlets and outlets of culverts.

BMP: Vehicle And Equipment Cleaning

VEC
Construction

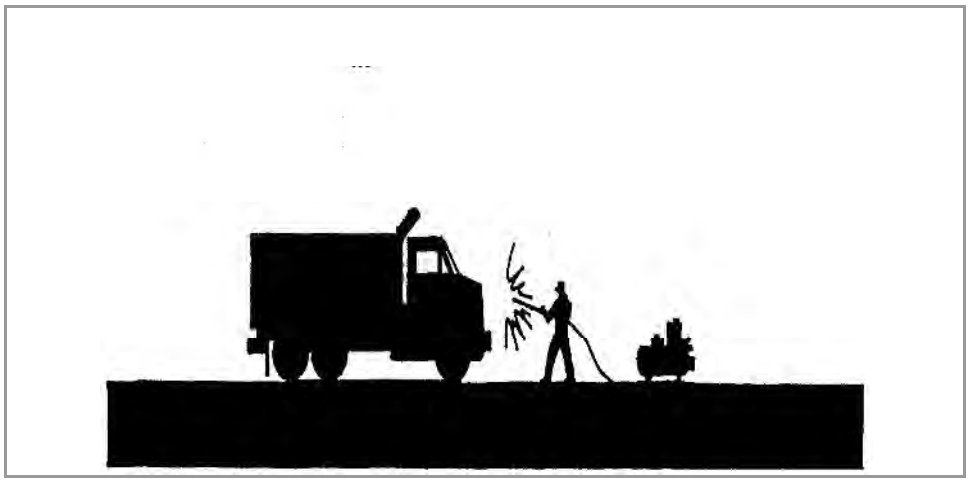

DESCRIPTION:
Prevent or reduce the discharge of pollutants to storm water from vehicle and equipment cleaning by washing in designated, contained areas only, eliminating discharges to the storm drain by infiltrating or recycling the wash water, and/or training employees and subcontractors.

INSTALLATION/APPLICATION:
- Use designated, bermed wash areas to prevent wash water contact with storm water, creeks, rivers, and other water bodies. The wash area can be sloped for wash water collection and subsequent infiltration into the ground.
- Use as little water as possible to avoid having to install erosion and sediment controls for the wash area. Use phosphate-free biodegradable soaps. Educate employees and subcontractors on pollution prevention measures. Do not permit steam cleaning on-site. Steam cleaning can generate significant pollutant concentrations.

LIMITATIONS:
- Even phosphate-free, biodegradable soaps have been shown to be toxic to fish before the soap degrades.
- Sending vehicles/equipment off-site should be done in conjunction with Stabilized Construction Entrance.

MAINTENANCE:
- Minimal, some berm repair may be necessary.

BMP: Vehicle And Equipment Fueling

VEF

Construction

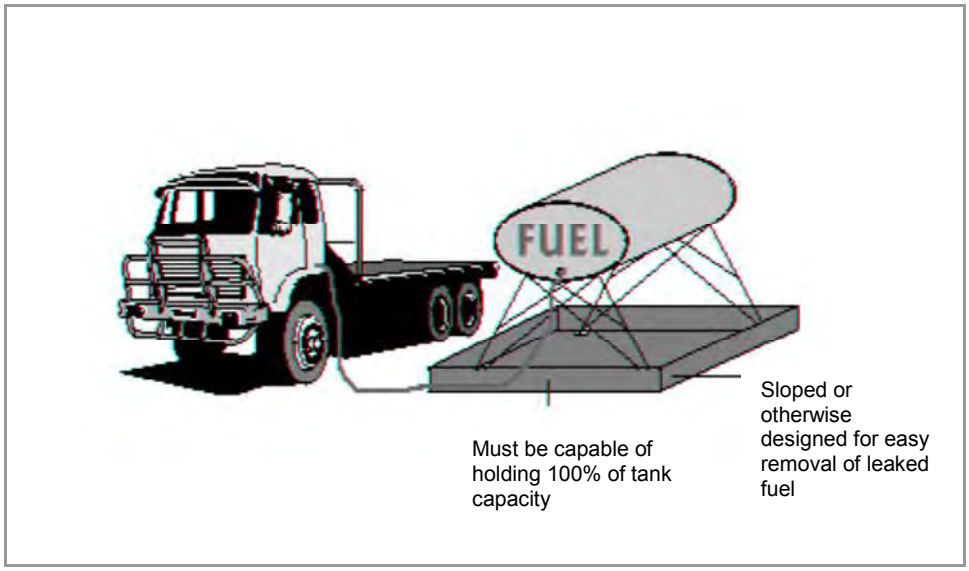

DESCRIPTION:
Prevent fuel spills and leaks, and reduce their impacts to storm water by using off-site facilities, fueling in designated areas only, enclosing or covering stored fuel, implementing spill controls, and training employees and subcontractors.

INSTALLATION/APPLICATION:

- Use off-site fueling stations as much as possible. Fueling vehicles and equipment outdoors or in areas where fuel may spill/leak onto paved surfaces or into drainage pathways can pollute storm water. If you fuel a large number of vehicles or pieces of equipment, consider using an off-site fueling station. These areas are better equipped to handle fuel and spills properly. Performing this work off-site can also be economical by eliminating the need for a separate fueling area at your site.
- If fueling must occur on-site, use designated areas, located away from drainage courses, to prevent the runon of storm water and the runoff of spills. Discourage topping-off of fuel tanks.
- Always use secondary containment, such as a drain pan or drop cloth, when fueling to catch spills/leaks. Place a stockpile of spill cleanup materials where it will be readily accessible. Use adsorbent materials on small spills rather than hosing down or burying the spill. Remove the adsorbent materials promptly and dispose of properly.
- Carry out all Federal and State requirements regarding stationary above ground storage tanks. (40 CF Sub. J) Avoid mobile fueling of mobile construction equipment around the site; rather, transport the equipment to designated fueling areas. With the exception of tracked equipment such as bulldozers and perhaps forklifts, most vehicles should be able to travel to a designated area with little lost time. Train employees and subcontractors in proper fueling and cleanup procedures.

LIMITATIONS:
Sending vehicles/equipment off-site should be done in conjunction with Stabilized Construction Entrance.

MAINTENANCE:

- Keep ample supplies of spill cleanup materials on-site.
- Inspect fueling areas and storage tanks on a regular schedule.

BMP: Vegetated Buffers

VB
Construction

DESCRIPTION:

Vegetated buffers are areas of natural or established vegetation maintained to protect the water quality of neighboring areas. Buffer zones slow stormwater runoff, provide an area where runoff can permeate the soil, contribute to ground water recharge, and filter sediment. Slowing runoff also helps to prevent soil erosion and streambank collapse.

APPLICATIONS:

Vegetated buffers can be used in any area able to support vegetation. They are most effective and beneficial on floodplains, near wetlands, along streambanks, and on unstable slopes.

INSTALLATION/APPLICATION CRITERIA:

To establish an effective vegetative buffer, follow these guidelines:

- Make sure soils are not compacted.
- Make sure slopes are less than 5 percent unless temporary erosion control mats are also used.
- Determine buffer widths after carefully considering slope, vegetation, soils, depth to impermeable layers, runoff sediment characteristics, type and amount of pollutants, and annual rainfall.
- Make sure buffer widths increase as slope increases.
- Intermix zones of vegetation (native vegetation in particular), including grasses, deciduous and evergreen shrubs, and understory and overstory trees.
- In areas where flows are concentrated and fast, combine buffer zones with other practices such as level spreaders, infiltration areas, or diversions to prevent erosion and rilling.

LIMITATIONS:

Adequate land must be available for a vegetated buffer. If land cost is high, buffer zones might not be cost-effective. In addition, adequate vegetative cover must be maintained in the buffer to keep it effective. Vegetated buffers work well with sheet flows, but they are not appropriate for mitigating concentrated stormwater flows.

MAINTENANCE:

Keeping vegetation healthy in vegetated buffers requires routine maintenance. Depending on species, soil types, and climatic conditions, maintenance can include weed and pest control, mowing, fertilizing, liming, irrigating, and pruning.

Adapted from EPA – Stormwater Menu of BMPs

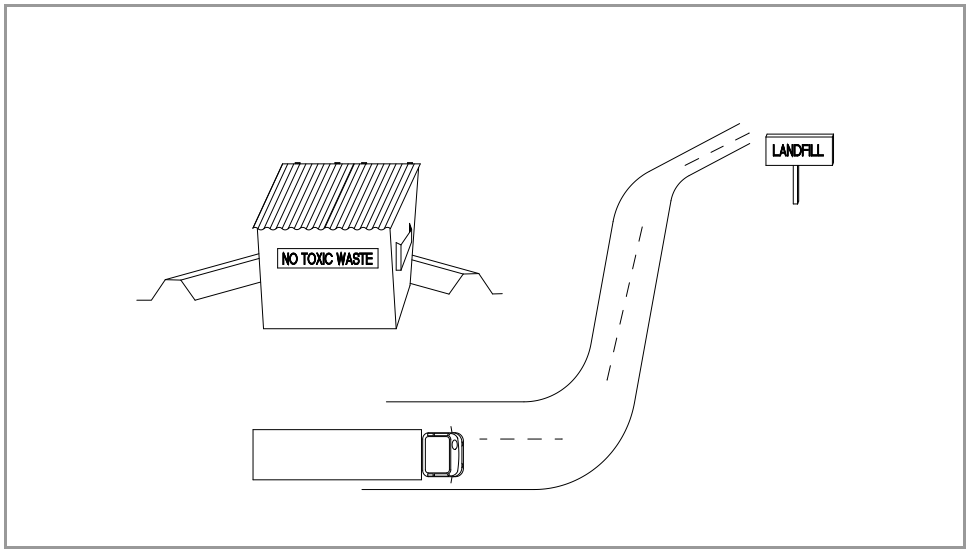

DESCRIPTION:
Controlled storage and disposal of solid waste generated by construction activities.

APPLICATION:
All construction sites.

INSTALLATION:
- Designate one or several waste collection areas with easy access for construction vehicles and personnel. Ensure no waterways or storm drainage inlets are located near the waste collection areas.
- Construct compacted earthen berm (See Earth Berm Barrier Information Sheet), or similar perimeter containment around collection area for impoundment in the case of spills and to trap any windblown trash.
- Use watertight containers with covers to remain closed when not in use. Provide separate containers for different waste types where appropriate and label clearly.
- Ensure all on site personnel are aware of and utilize designated waste collection area properly and for intended use only (e.g. all toxic, hazardous, or recyclable materials shall be properly disposed of separately from general construction waste).
- Arrange for periodic pickup, transfer and disposal of collected waste at an authorized disposal location. Include regular Porta-potty service in waste management activities.

LIMITATIONS:
- On-site personnel are responsible for correct disposal of waste.

MAINTENANCE:
- Discuss waste management procedures at progress meetings.
- Collect site trash daily and deposit in covered containers at designated collection areas.
- Check containers for leakage or inadequate covers and replace as needed.
- Randomly check disposed materials for any unauthorized waste (e.g. toxic materials).
- During daily site inspections check that waste is not being incorrectly disposed of on-site (e.g. burial, burning, surface discharge, discharge to storm drain).

ORDINANCE NO. 2008-01

AN ORDINANCE AMENDING THE DEVELOPMENT CODE, ADDING SECTION 16.44 OF THE SOUTH JORDAN MUNICIPAL CODE, PERTAINING TO LAND DISTURBANCE.

WHEREAS, the City of South Jordan may enact rules and regulations relating to development of land with in City limits pursuant to Utah Code Ann.§ 10-9a (2007) as the City deems necessary to achieve the purpose of the statute (UCA § 10-9a-102); and

WHEREAS, the City has enacted and published ordinances regulating development that are codified as Title 16 "Development Code" in the South Jordan Municipal Code ("SJMC"); and

WHEREAS, land throughout the City is being developed under the requirements of SJMC Title 16; and

WHEREAS, SJMC Title 16 does not address Land Disturbance or grading requirements for development of property; and

WHEREAS, SJMC Title 16 does not clearly address the requirements and enforcement of the State mandated Utah Pollution Discharge Elimination System (UPDES) ; and

WHEREAS, developers regularly grade and otherwise change the natural grade of the land in a manner that complies with current City standards and regulations but creates complaints from neighbors mainly in infill projects; and

WHEREAS, the South Jordan City Council has found and determined that the proposed addition of Title 16.44 to the South Jordan Municipal Code will support the best interests of the City and will promote the public health, safety, and welfare..

NOW, THEREFORE, BE IT ORDAINED BY THE CITY COUNCIL OF SOUTH JORDAN CITY, UTAH AS FOLLOWS:

SECTION 1. Enactment. Title 16 Chapter 44, "Land Disturbance" is hereby enacted as follows:

CHAPTER 16.44

LAND DISTURBANCE

Sec. 16.44.010 Short Title.
Sec. 16.44.020 Authorization to Adopt Standards.
Sec. 16.44.030 Purpose.
Sec. 16.44.040 Definitions.
Sec. 16.44.050 Administration
Sec. 16.44.060 Conflict.
Sec. 16.44.070 Land Disturbance Permit Required.

Sec. 16.44.080 Exemptions.
Sec. 16.44.090 Application.
Sec. 16.44.100 Plans and Specifications.
Sec. 16.44.110 Required Plans and Reports.
Sec. 16.44.120 Slope Length.
Sec. 16.44.130 Application Waiver.
Sec. 16.44.140 Fees.
Sec. 16.44.150 Review and Approval.
Sec. 16.44.160 Issuance.
Sec. 16.44.170 Conditions of Approval.
Sec. 16.44.180 Denial of Land Disturbance Permits.
Sec. 16.44.190 Approved Plans.
Sec. 16.44.200 Modification of Plans.
Sec. 16.44.210 Correction of Errors.
Sec. 16.44.220 Term of Land Disturbance Permits.
Sec. 16.44.230 Extension of Term.
Sec. 16.44.240 Suspended or Abandoned Work.
Sec. 16.44.250 Renewal of Expired Land Disturbance Permit.
Sec. 16.44.260 Suspension or Revocation of Permit.
Sec. 16.44.270 No Transfer or Assignment of Permit.
Sec. 16.44.280 Validity of Permit.
Sec. 16.44.290 Additional Permits.
Sec. 16.44.300 Emergencies.
Sec. 16.44.310 Compliance With Permit.
Sec. 16.44.320 Protective Devices.
Sec. 16.44.330 Maintenance of Site.
Sec. 16.44.340 Access and Haul Routes.
Sec. 16.44.350 Consent of Adjacent Property Owners.
Sec. 16.44.360 Cuts and Fills.
Sec. 16.44.370 Erosion Control and Drainage Devices.
Sec. 16.44.380 Areas Subject to Slides and Unstable Soils.
Sec. 16.44.390 Planting and Irrigation of Cut and Fill Slopes.
Sec. 16.44.400 Property Line and Corner Markers
Sec. 16.44.410 Reserved
Sec. 16.44.420 Slope Protection Easements.
Sec. 16.44.430 Lots Graded Toward Street for Drainage.
Sec. 16.44.440 Lots Which Cannot be Graded Toward the Street Easements for Drainage.
Sec. 16.44.450 Materials for Side and Rear Yard Drainage.
Sec. 16.44.460 Flow of Water from One Lot to Another Limited Use.
Sec. 16.44.470 Landscaping of Certain Lots for Erosion Control.
Sec. 16.44.480 Erosion Control and Revegetation.
Sec. 16.44.490 Wet Weather Plan.
Sec. 16.44.500 Land Disturbance Design and Construction Standards.
Sec. 16.44.510 Lot Impervious Surface Area Drainage.
Sec. 16.44.520 Land Disturbance Activities and Improvements Bond.
Sec. 16.44.530 Revegetation Bond.
Sec. 16.44.550 Permit Holder Supervision and Inspection.
Sec. 16.44.560 City Inspections.
Sec. 16.44.570 Additional Inspections or Testing.
Sec. 16.44.580 Inspection Requests.
Sec. 16.44.590 Duty to Keep Work Accessible and Exposed.
Sec. 16.44.600 Entry Onto Premises.
Sec. 16.44.610 Certification or Approval.
Sec. 16.44.620 Transfer of Responsibility for Certification.
Sec. 16.44.630 Final Inspection.

Sec. 16.44.640 Building Permits.
Sec. 16.44.650 Validity of Inspection.
Sec. 16.44.660 Enforcement.
Sec. 16.44.670 Violations.
Sec. 16.44.680 Remedies and Enforcement Powers.
Sec. 16.44.690 Notice of Violation.
Sec. 16.44.700 Suspension or Revocation of Land Disturbance Permit.
Sec. 16.44.710 Notice of Suspension or Revocation.
Sec. 16.44.720 Cessation of Work.
Sec. 16.44.730 Decision of Suspension or Revocation.
Sec. 16.44.740 Right of Entry.
Sec. 16.44.750 Appeals.
Sec. 16.44.760 Liability.
Sec. 16.44.770 Right to Stop Work.
Sec. 16.44.780 Parking Lots.

16.44.010 Short Title.

This Chapter is to be known as the "Land Disturbance Ordinance" of the City and may be so
cited.

16.44.020 Authorization to Implement Standards

The City Engineer or designee is hereby authorized to implement these standards pursuant to this Chapter.

16.44.030 Purpose.

The purpose of this Chapter is to establish minimum requirements and procedures for conducting land disturbance activities within the City. It is the intent of this Chapter to protect the health, safety and welfare of the public against inadequate, unwarranted, or unsafe land disturbance activities during all aspects of land disturbance activities, including, but not limited to the following:

(a) To establish processes, procedures and standards for land disturbance activities such as clearing, grubbing, grading, excavating, filling, dredging, and other land disturbance related activities, to minimize hazards to life and limb, protect against erosion and sedimentation, maintain the natural environment, protect the safety, use, and stability of public rights-of-way and drainage facilities, and provide for restoration of the land through re-vegetation and landscaping.

(b) To assure that projects approved under this Chapter, as well as neighboring and downstream properties, will be free from harmful effects of new land disturbance activities with regard to runoff, including inundation, flooding, erosion, air pollution, and sedimentation.

(c) To ensure proper restoration of vegetation and soil systems disturbed by land disturbance activities, to maintain an attractive and healthy landscape, and to control against dust and erosion and their consequent effects on soil structure and air and water quality during and after excavation.

(d) To provide processes and standards in compliance with State and Federal requirements regarding pollution, environmental quality, and storm water discharge.

16.44.040 Definitions.

As used in this Chapter, the following words and phrases shall have the meanings given in this Section:

(a) **Applicant:** Any person who submits an application for a permit pursuant to the Land Disturbance Ordinance.

(b) **Best Management Practice (BMP):** Practices, procedures or designs used as a standard for a given industry. In this specific case, these practices are for the erosion control industry's Best Management Practices (BMP's) for controlling non-point sources of pollution and are the methods, measures, practices, or a combination of practices determined to be the most effective and practicable means (including technological, economic, and institutional considerations) to control non-point pollutants at levels compatible with environmental quality goals. As used in the document, BMP's are synonymous with erosion and sediment control measures.

(c) **Building Envelope:** The area within the lot which will be used to construct the building, landscaped areas, retaining walls, fences, porches, patios, decks, swimming pools, driveways, parking areas, or any other permanent feature which is appurtenant to the building.

(d) **Buttress Fill:** A buttress fill is a designed compacted earth fill used for providing lateral support to an un-stabilized earth or rock mass.

(e) **City:** City of South Jordan, Utah.

(f) **City Engineer:** City Engineer shall mean the City Engineer of City of South Jordan, or the person(s) engaged by the City and authorized to perform the duties assigned to the City Engineer, and shall include any deputies, assistants, and representatives.

(g) **Civil Engineer:** A professional engineer in the branch of civil engineering holding a valid certificate of registration issued by the State of Utah.

(h) **Clearing and Grubbing:** Moving, removing, displacing, and/or stockpiling, by manual or mechanical means, trees, and other vegetation and/or the top organic layer as described in the geotechnical report. In the absence of a geotechnical report the organic layer shall not be greater than eight (8) inches.

(i) **Community Development Director:** That person charged with the responsibility of directing all phases of the Community Development Division and the enforcement of all State statutes and City laws pertaining to this office, or his duly authorized representative.

(j) **Compaction:** The act of compacting or consolidating soil and rock material to a specified density, and the resulting compacted state of the material.

(k) **Detention:** The holding back or delaying of the flow of water, through manmade or natural means.

(l) **Dredging:** The practice of deepening a waterway by mechanical means by the removal of sediments.

(m) **Enforcement Authority:** The City Engineer, the Engineering Inspector, and other designated representatives of the City Engineer, or any duly appointed Code Compliance

Officer or police official charged with the responsibility for enforcement of the provisions of this Chapter.

(n) **Engineering Geologist:** A professional engineering geologist licensed or registered under the laws of Utah and capable of applying the geological sciences to engineering practices for the purpose of assuring that the geological features affecting the location, design, construction, operation, and maintenance of engineering works are recognized and adequately provided for.

(o) **Erosion:** The process of detachment of soil particles or other surface material by the action of wind, water, snow, or ice.

(p) **Erosion Control Measures:** The structural and nonstructural Best Management Practices (BMP's) for erosion control that prevents displacement of soil particles by wind or water. BMP Erosion control measures may include seeding, mulching, vegetative buffer strips, sod, plastic coverings, rip rap, gabions, other channel armoring methods, burlap coverings, watering, and other BMP measures that control the movement of the ground surface or soil.

(q) **Farming and Agricultural Operations:** Any activity or process normally performed as part of the farming use of the land which would prepare the soil for planting or harvesting of agriculturally usable products.

(r) **Fill:** Deposits of soil, rock, or other materials placed by man.

(s) **Finished Grade:** The final grade or elevation of the building site, slope or terrace (0.1 plus or minus feet).

(t) **Grade:** The elevation of the ground surface as measured from a known vertical control. Existing grade means grade currently on the site. Natural grade means the grade unaltered evidenced by the presence of indigenous plants and grasses.

(u) **Grading:** The act or result of digging, excavating, transporting, spreading, depositing, filling, compacting, settling, or shaping of land surfaces and slopes, and other operations or activities involving the physical movement of rock or soil.

(v) **LDDCS:** Land Disturbance Design and Construction Standards.

(w) **Land Disturbance:** Any disturbance of native soils, plants, or environment, including, but not limited to, clearing, grubbing, grading, excavation, filling, dredging, construction of earth-filled dams, and any other types of earthwork.

(x) **Land Disturbance Design and Construction Standards:** City of South Jordan Land Disturbance Design and Construction Standards as adopted by the City. Abbreviated herein as LDDCS.

(y) **Land Disturbance Permit:** The land disturbance permit required by the City in accordance with provisions of this Chapter.

(z) **Landmark Trees:** Trees that measure over three inch (3) caliper.

(aa) **Landscape Architect:** A professional landscape architect licensed or registered under the laws of Utah.

(bb) **Lot Level:** Design, construction and infrastructure related to construction on a specific lot within an approved subdivision or site plan development.

(cc) **Planting Date:** The date native seed can be applied without temporary irrigation, generally from October 15 through March 1, or as otherwise determined by the City's Engineering Division.

(dd) **Project:** A defined site that has obtained final subdivision plat or site plan approval from the City.

(ee) **Sediment:** The transport of soil or earth material by wind, water, snow or ice.

(ff) **Sediment Control Measures:** The structural and nonstructural BMP that contains the deposited, displaced soil particles caused by erosion. This may include (but not limited to) dikes, sediment detention traps, sediment detention basins, filters, fences, barriers, swales, berms, drains, check dams, and other measures that control the deposition of soil or earth material.

(gg) **Site:** A parcel or parcels of real property owed by one or more persons on which activity regulated by this Chapter is occurring or is proposed to occur.

(hh) **Slope:** A portion of ground forming a natural or artificial incline, including retaining wall.

(ii) **Soil:** All earth material, of whatever origin, which overlies bedrock.

(jj) **Soils Engineer:** A professional civil engineer licensed under the laws of Utah who is experienced in soil mechanics and slope stability analysis.

(kk) **Structure:** Anything constructed or erected which requires location on the ground or is attached to something having location on the ground.

(ll) **Subdivision Level:** Design, construction and infrastructure related to subdivision development and systems such as drainage, culinary water, wastewater systems, etc.

(mm) **Swales:** Shallow grassed or otherwise protected trenches that are wider than they are deep that provide a specific pathway for drainage water.

(nn) **Wet Weather Plan:** A detailed erosion and sediment control plan and construction sequence that clearly shows how construction will be processed during the period of October 31 of each year until March 31 of each year.

16.44.050 Administration.

The Engineering Division is designated as the responsible division, with the City Engineer as the official responsible for the administration of this Chapter. The City Engineer may delegate any or all administrative duties provided herein as deemed necessary.

16.44.060 Conflict.

In the event of a conflict between the terms of this Chapter or any other law, ordinance or rule, the more restrictive provision shall apply.

16.44.070 Land Disturbance Permit Required.

No person, developer, builder, contractor, or other entity in any Land Use Zone except for Planned Community Zone shall cause to be commenced or perform any land disturbance,

grading, relocation of earth, or any other land disturbance activity, and no person shall import or export any earth materials to or from any site, without first obtaining a land disturbance permit. No land disturbance permit shall be issued for any site or project requiring site plan approval until and unless a final site plan has been approved by the City Engineer, for the site or project, and no land disturbance permit shall be issued for any site or project requiring subdivision approval until and unless the final subdivision plat has been approved by the City Engineer for the site or project. City Engineer or designee may waive the requirement of obtaining final site plan or final subdivision plat approval as is deemed appropriate for a particular project. City Engineer may require a letter of indemnification as part of that approval

No person, developer, builder, contractor in a Planned Community Zone shall cause to be commenced or commence land disturbance, grading, relocation, or any other land disturbance activity and no person shall import or export any earth materials to or from any site or within the site, without first obtaining a land disturbance permit. No land disturbance permit shall be issued for any site or project within a Planned Community Zone without City approved land disturbance or grading plans.

16.44.080 Exemptions.

The following activities do not require a land disturbance permit. Activities exempted from the land disturbance permit requirements set forth herein are subject to and shall be performed in accordance with the Land Disturbance Design and Construction Standards, and all other applicable ordinances, rules, regulations, standards and specifications of the City.

(a) An excavation which does not exceed fifty (50) cubic yards; or affects an area that is less than three-thousand (3,000) square feet; or does not create a cut slope greater than five feet (5) in height or steeper than two horizontal to one vertical (2:1); provided, however, any excavation which is made in an area of adverse geological conditions or which alters a drainage course must obtain a permit.

(b) A fill which is less than one foot (1) in depth and placed on natural terrain with a slope flatter than five horizontal to one vertical (5:1); affects an area that is less than three-thousand (3,000) square feet; is less than three feet (3) in depth and is not intended to support structures; provided, any fill over fifty (50) cubic yards or which affects a drainage course must obtain a permit.

(c) Excavations below the finished grade for basements and footings of buildings, retaining walls, swimming pools, or other structures authorized by a valid building permit. This shall not exempt any fill made of materials from such excavations or exempt any excavation having an unsupported height greater than five feet (5) after the completion of such structures.

(d) Mining and quarrying operations conducted under a valid special use permit issued by the City pursuant to applicable zoning regulations.

(e) The depositing of rubbish or other materials at any dump or sanitary fill conducted under a valid permit and/or applicable zoning ordinances. Such exemption shall not extend to surrounding berms, permanent access roads, building sites, or protective drainage works.

(f) Farming, agricultural operations, and residential gardening conducted under a valid use permit or applicable zoning ordinances.

(g) Soil and water conservation work under the direct control of the United States Natural Resources Conservation Service; provided, the construction of water impounding structures of earth shall require a permit where the maximum depth to which water is or may be impounded is five feet (5) or greater.

(h) Grading operations conducted by the City for approved capital improvement projects.

(i) Exploratory Work made in preparation of completing a Geological and or Soils report.

16.44.090 Application.

Application for a land disturbance permit shall be filed with the City Engineer on forms furnished by the City for such purpose. Applications shall include all the plans, specifications, reports, documentation and information required herein. Three (3) sets of all required plans, specifications and reports shall be submitted with each application. All such plans, specifications and reports shall be prepared and signed by a civil engineer, soils engineer, engineering geologist and/or landscape architect, as required by this Chapter and the LDDCS. Additional experts in applicable field should be utilized for preparation of such documents and reports as appropriate. No application shall be processed until all required plans, specifications, reports, documentation and information have been received by the City in accordance with the provisions and requirements of this Chapter.

16.44.100 Plans and Specifications.

Each application for a land disturbance permit shall include the following plans, specifications, reports, documentation and information:

(a) A vicinity sketch or other data adequately indicating the site location;

(b) The property lines and dimensions and bearings of the property on which the work is to be performed;

(c) The location of any existing buildings or structures on the property where the work is to be performed and the location of any building or structure on the land of adjacent property owners, which building or structure is within fifty feet (50) of the property boundary;

(d) The location of landmark trees as indicated by the designation of the location of the center of the trunk;

(e) Accurate topography showing suitable contours of the existing and proposed ground elevations. The contours shall be extended past the boundary lines of any project for a minimum of one hundred feet (100). The City Engineer may require the contours to be extended to include watershed areas and all other areas influencing the proposed project or site

(f) The elevations, dimensions, locations, extent, and slopes of all proposed land disturbance activities shown by contours or other means;

(g) A certification, by a soils engineer, of the quantity and type of material of any proposed excavation and fill;

(h) The estimated starting and completion dates for the proposed land disturbance activities and proposed land disturbance activities schedule and permit term;

(i) Detailed plans of all drainage devices, walls, cribbing, dams, or other protective devices to be constructed in connection with, or as a part of, the proposed work, together with a map showing the drainage area and estimated runoff of the area served by the drains. All hydrologic and hydraulic calculations shall be signed by a civil engineer;

(j) Temporary construction entrance and exit plan as indicated in the LDDCS;

(k) An indication as to the type of structure(s) to be constructed or the proposed use of the site, such as single -family residence, multiple -family development, commercial, or industrial; and

(l) Any additional plans, drawings, or calculations required herein or by the City Engineer.

16.44.110 Required Plans and Reports.

Unless an application waiver is obtained in accordance with the provisions of this Chapter, each application for a land disturbance permit shall include the following plans and reports for the proposed land disturbance activity and site. The grading plan shall be prepared in accordance with the requirements and standards for such plans as set forth in the Land Disturbance Design and Construction Standards.

(a) Grading plan prepared and signed by a civil engineer

(b) Drainage Plan -Each application for a land disturbance permit shall include a drainage plan for the proposed land disturbance activity and site. The drainage plan shall be prepared by a civil engineer and shall be prepared in accordance with the requirements and standards for such plans as set forth in the LDDCS.

(c) Rear and Side Lot Drainage Swales. Swales located in rear and side yards shall part of the grading and drainage plan and be designed as set forth in the LDDCS.

(d) Erosion and Sediment Control Plan -Each application for a land disturbance permit shall include an erosion and sediment control plan for the proposed land disturbance activity and site. The erosion and sediment control plan shall be prepared by a civil engineer and shall be prepared in accordance with the requirements and standards for such plans as set forth in the LDDCS.

(e) Re-vegetation Plan -Each application for a land disturbance permit shall include a re-vegetation plan for the proposed land disturbance activity and site. The re-vegetation plan shall be prepared by an erosion control specialist or professional of comparable expertise and shall be prepared in accordance with the requirements and standards for such plans as set forth in the LDDCS, Section 4.

(f) Soils Report - Each application for a land disturbance permit shall include a soils report for the site. The soils report be prepared and signed by a soils engineer and shall be prepared in accordance with the requirements and standards for geological reports as set forth in the LDDCS, Section 2

(g) Geological Report - When deemed necessary by the City Engineer due to the circumstances and conditions of the site, an application for a land disturbance permit shall include a geological report for the site. The geological report, when required, shall be

prepared and signed by a engineering geologist and shall be prepared in accordance with the requirements and standards for geological reports as set forth in the LDDCS, Section 2.

(h) Exploratory Work -Surface and subsurface exploratory work and reports may be required when deemed necessary by the City Engineer due to site conditions and/or hazards on the site. When required, such exploratory work and reports shall be performed and prepared by a soils engineer and/or engineering geologist.

16.44.120 Slope Length.

All applications for land disturbance activities involving or proposing cut and/or fill slopes shall include a report prepared and signed by an erosion control specialist or professional of comparable expertise (i.e. Professional Civil Engineer, Landscape Architect, etc.) addressing the design, safety, stability of the proposed slope lengths. Such report shall indicate how the applicant will address the issue of length of slope using the Revised Uniform Soils Loss Equation (RUSLE). The report shall indicate the method and/or materials to be used.

16.44.130 Application Waiver.

The City Engineer may waive any application requirement, plan, specification or report when deemed unnecessary for the proposed application and for good cause showing. A request for an application waiver shall be submitted by the applicant in writing setting forth the grounds and reasons for the waiver. An application shall not be deemed complete for purposes of the filing of a completed application until the City Engineer has approved the application waiver request. Failure of the City Engineer to approve the request within 60 days shall be deemed a denial.

16.44.140 Fees.

All applicable fees shall be paid by applicant with the filing of an application for a land disturbance permit. An application will not be deemed complete until the required fees have been received by the City. The fee amount shall be as adopted by City Council.

16.44.150 Review and Approval.

The City Engineer shall review the application, plans, and specifications, reports, documentation and information filed by an applicant for a land disturbance permit. If the City Engineer determines that the application is incomplete, or that additional information is needed from the applicant regarding the proposed land disturbance activities, the City Engineer shall notify the applicant in writing of such deficiencies or the need for additional information. The City Engineer may also request review of the application, plans and specifications by other departments and divisions of the City for compliance with the laws and ordinances under their jurisdiction.

Once satisfied that the work described in an application for land disturbance permit and the plans and specifications filed with the application conform to the requirements of this Chapter and other pertinent laws and ordinances, all applicable fees have been paid, and all required bonds have been provided in accordance with the provisions of this Chapter, the City Engineer may issue a land disturbance permit to the applicant.

16.44.160 Issuance.

The City Engineer shall provide the applicant with a written decision, within 30 days, regarding the approval or denial of the application for land disturbance permit and related plans and shall provide the applicant with a copy of such decision. If the application is approved, a copy of the land disturbance permit will be provided to the applicant.

16.44.170 Conditions of Approval.

In granting any land disturbance permit pursuant to the provisions of this Chapter, the City Engineer or his or her authorized representative may attach such conditions as may be reasonably necessary to protect public health and safety. Such conditions may include, but will not be limited to:

(a) The improvement of any existing site condition to conform with the standards of this Chapter; and
(b) Requirements for fencing excavations or fills which would otherwise be hazardous, and
(c) Requirements for access and haul routes. The City Engineer may impose conditions to the land disturbance permit with respect to access or haul routes to and from land disturbance activity sites, the hours of work, methods of controlling dust, and safety precautions involving pedestrian or vehicular traffic as determined required in the interest of the public health, safety and welfare.

16.44.180 Denial of Land Disturbance Permits.

(a) A land disturbance permit shall not be issued in any case where it is determined by the City Engineer that the work proposed by the applicant is hazardous, or is likely to endanger any private property, result in the deposit of debris on any public way, or interfere with any existing drainage course.

(b) A land disturbance permit shall not be issued if the land area for which grading is proposed is subject to geological or flood hazard to the extent that no reasonable amount of corrective work can eliminate or sufficiently reduce the hazard to human life or property as determined by the City Engineer.

(c) A land disturbance permit shall not be issued if the proposed land disturbance activity would not comply with the requirements of an approved site plan, subdivision plat, or any provisions of law, including the provisions of this Chapter.

16.44.190 Approved Plans

Prior to issuance of the land disturbance permit, the applicant shall provide the City with three (3) sets of the final plans, specifications and computations (full-size) and two (2) sets of 11x17-inch plans. Upon issuance of the land disturbance permit, the City Engineer shall endorse in writing, or stamp Approved for Construction on all required sets of plans and specifications. The City Engineer shall retain two (2) sets of the plans and specifications during the period of construction and as thereafter required by the Government Records Access and Management Act (GRAMA). Upon Approval, the City Engineer shall return one set of the final plans and specifications, stamped Approved, to the applicant. The applicant shall retain the approved set of plans and specifications at the site covered by the land disturbance permit at all times during which the work authorized thereby is in progress.

16.44.200 Modification of Plans.

No approved grading/Land Disturbance plans or specifications shall be changed, modified, altered or amended, without approval of the City Engineer in accordance with the procedures and requirements set forth herein for original approval of such plans and specifications. Modification of plans will require additional City review and will be subject to additional fees.

16.44.210 Correction of Errors.

The issuance of a land disturbance permit based upon submitted plans, specifications and documents shall not prevent or preclude the right of the City from thereafter requiring the correction of errors which may be later discovered in such plans, specifications and documents.

16.44.220 Term of Land Disturbance Permits.

Each land disturbance permit shall contain a specified term as determined by the City. The date the land disturbance permit expires shall be noted on the land disturbance permit. No person shall perform land disturbance, grading, relocation of earth, or any other land disturbance activity beyond the expiration date, unless an extension of term is granted or a new land disturbance permit is obtained in accordance with this Chapter.

16.44.230 Extension of Term.

Prior to expiration of the land disturbance permit, the land disturbance permit holder may apply for an extension of time in which to complete the work in a reasonable and expeditious manner. The City Engineer may grant an extension of time, upon a showing of good cause, for a period or periods not exceeding a total of one (1) year. Denial of an extension of time does not preclude the right of the land disturbance permit holder to apply for a new land disturbance permit for the remaining balance of the work. Adequate security or written consent from the surety must be provided for any extension of time before approval of the extension is granted or becomes effective. If the extension is denied, the Cit y will make a demand on the bond and complete the work.

16.44.240 Suspended or Abandoned Work.

Every land disturbance permit issued by the City Engineer under the provisions of this Chapter expires by limitation and becomes null and void if the land disturbance permit holder suspends or abandons the construction or work authorized by such land disturbance permit, at any time after the work is commenced, for a period of thirty days (30) or longer. After construction or work under a land disturbance permit has been suspended or abandoned for a period of thirty (30) days or longer, a new or renewed permit must be obtained prior to recommencing work.

16.44.250 Renewal of Expired Land Disturbance Permit.

If a land disturbance permit has expired, a new land disturbance permit shall be obtained before any work can be recommenced. If no changes have been made or will be made to the original plans and specifications for such work, and any suspension or abandonment has not exceeded one (1) year, the fee for the new land disturbance permit will be one-half the amount ordinarily required for a new land disturbance permit. If changes have been made or will be made in the original plans or specifications for the land disturbance activity, or the suspension or abandonment has exceeded one (1) year, the fee for a new permit shall be required for a new permit for the proposed land disturbance activity.

16.44.260 Suspension or Revocation of Permit.

The City may, in writing, suspend or revoke a permit when the permit is issued in error, or on the basis of incorrect information supplied, or when work conducted there under is in violation of the terms of the permit or the provisions of this Chapter or other applicable City Ordinances, rules, regulations, standards and specifications, or pertinent laws.

16.44.270 No Transfer or Assignment of Permit.

Land disturbance permits shall not be transferable or assignable and work shall not be performed under a land disturbance permit in any place other than that specified in the permit. Nothing herein shall prevent a permit holder from subcontracting the work to be performed under a land disturbance permit; provided, however, the permit holder shall be and remain responsible and liable for the performance of the work and land disturbance activities under the permit and for all bonding and other requirements of this Chapter and the applicable permit.

16.44.280 Validity of Permit.

The issuance of a land disturbance permit shall not be construed to be a permit for violation of any of the provisions of this Chapter or any other City Ordinances, rules, regulations, standards or specifications or other pertinent laws. Permits presuming to give such authority shall be deemed invalid.

16.44.290 Additional Permits.

The issuance of a land disturbance permit shall not relieve the owner, applicant, permit holder, or developer from obtaining any and all other permits or approvals required by the City or any other applicable agency having jurisdiction over the work or property affected by the proposed land disturbance activity.

16.44.300 Emergencies.

The provisions of this Chapter shall not apply to any land disturbance activity which is conducted during a period of emergency or disaster, as declared and defined by the City, and which is directly connected with or related to the relief of conditions caused by such emergency or disaster.

16.44.310 Compliance With Permit.

The land disturbance permit holder and contractor and their agents shall carry out the proposed land disturbance activities in accordance with the approved plans and specifications, the conditions of the land disturbance permit, and the requirements of this Chapter and all other applicable ordinances, rules, regulations and standards of the City.

16.44.320 Protective Devices.

The land disturbance permit holder and contractor and their agents shall maintain all required protective devices and temporary drainage during the progress of the land disturbance activities and shall be responsible for the observance of the hours of work, mud tracking, dust control, methods of hauling, and other applicable regulations.

16.44.330 Maintenance of Site.

The land disturbance permit holder and contractor and their agents shall be responsible for the maintenance of the site and the removal of all debris during the term of the permit.

16.44.340 Access and Haul Routes.

Temporary construction entrance and exit routes shall be provided by the permit holder in accordance with the approved plans and permit access at key points to the site or project to eliminate the problem of tracking mud and debris from the construction site onto private or public streets.

16.44.350 Consent of Adjacent Property Owners.

Whenever any land disturbance activity requires entry onto adjacent property for any reason, the land disturbance permit applicant shall obtain the written consent of the adjacent property owner or their authorized representative and shall file a copy of such consent with the City Engineer before a land disturbance permit may be issued.

16.44.360 Cuts and Fills.

(a) Height. Except as otherwise provided herein, no finished fill slope shall exceed a vertical height of twenty-five feet (25). The City Engineer may approve a fill slope in excess of twenty-five feet (25) as deemed appropriate in his or her sole discretion based upon the circumstances and conditions of the proposed site and fill. Any fill slope proposed in excess of twenty-five feet (25) shall be supported by documentation and a report prepared and signed by a professional engineering geologist and soils engineer attesting to the appropriateness, safety and stability of the proposed fill slope. Such documentation and report shall be prepared at the applicants expense and shall address the need for and design of necessary measures to provide for the safety and stability of the proposed slope in accordance with the LDDCS.

(b) Slope. Except as otherwise provided herein, no cut or fill shall exceed a slope of two horizontal to one vertical (2:1). The City Engineer may approve a cut or fill slope in excess of two horizontal to one vertical (2:1) as deemed appropriate in his or her sole discretion based upon the circumstances and conditions of the proposed site and the cut or fill in accordance with the LDDCS. Any cut or fill slope proposed in excess of two horizontal to one vertical (2:1) shall be supported by documentation and a report prepared and signed by a professional engineering geologist and soils engineer attesting to the appropriateness, safety and stability of the proposed cut or fill slope. Such documentation and report shall be prepared at the applicants expense and shall address the need for and design of necessary measures to provide for the safety and stability of the proposed cut or fill slope.

(c) Unstable Material. The City Engineer may require any cut or fill to be constructed with an exposed surface flatter than two horizontal to one vertical (2:1) when, in the City Engineers discretion, under the particular conditions, such flatter surface is deemed necessary for stability or safety.

(d) Fill Slope Limits. Toes of fill slopes shall not be made nearer to a property boundary line than one-half (1/2) of the height of the fill, or twenty feet (20), whichever is less. Fill slopes shall not be divided horizontally by property lines. Fill slopes occurring on a side or rear lot line shall be made a part of the downhill lot.

(e) Intervening Terraces. When intervening terraces are used, terraces shall be paved using materials as approved by the City and shall have a minimum width of six feet (6).

Terraces shall be extensively landscaped in accordance with an approved landscaping plan. Terraces shall be spaced at vertical intervals of twenty-five feet (25); provided, however, for slopes less than forty feet (40') in vertical height, terraces shall be approximately at mid-height. For slopes flatter than two horizontal to one vertical (2:1), or where soil conditions require, additional intervening terraces may be required.

(f) Compaction. All fills shall be placed, compacted, inspected, and tested in accordance with the provisions of this Chapter and the Land Disturbance Design and Construction Standards. If the strict enforcement of the compaction provisions of this Section is determined by the City Engineer to be unnecessary because of the proposed or probable use of the land, the City Engineer may waive the requirements. The requirements of this Section shall not be waived when structures are to be supported by the fill, the fills are being placed in areas to be designated as hillside, or where the fills are necessary as a safety measure to aid in preventing the saturation, settling, slipping, or erosion of the fill.

(g) Fills Toeing Out on Natural Slopes. Except as otherwise provided herein, no fills toeing out on natural slopes, which are steeper than two horizontal to one vertical (2:1) shall be permitted. The City Engineer may approve such fills toeing out on natural slopes which are steeper than two horizontal to one vertical (2:1) as deemed appropriate in his or her sole discretion based upon the circumstances and conditions of the proposed site and fill. Any fill slope proposed to toe out on natural slopes which are steeper than two horizontal to one vertical (2:1) shall be supported by documentation and a report prepared and signed by a professional engineering geologist and soils engineer attesting to the appropriateness, safety and stability of the proposed fill. Such documentation and report shall be prepared at the applicants expense and shall address the need for and design of necessary measures to provide for the safety and stability of the proposed fill.

(h) Combined Cut and Fill Slopes. Combined cut and fill slopes shall meet the requirements of this section insofar as steepness, height, and terracing are concerned except that, where the slope exceeds twenty-five feet (25') in height, the required drainage bench shall be placed at the top of the cut slope.

(i) Setback. Fill placed on or above the top of an existing or proposed cut or natural slope steeper than three horizontal to one vertical (3:1) shall be set back from the top of the slope a minimum distance as required by the International Building Code, as adopted by the City, or such greater distance as approved by the City Engineer based upon submitted reports and documentation for the project.

(j) Existing Fills. All existing man-made fills on any and all sites shall be properly evaluated by a soils engineer. If deficiencies exist, recommendations and design criteria for corrective measures shall be included within the soils engineering report.

(k) Measure of Settlement. The City Engineer or the Building Official may require the determination of the settlement characteristics of any fills to establish that any movements have substantially ceased. In such cases, a system of bench marks shall be installed by a civil engineer or land surveyor at critical points on the fill, and accurate measurements of both horizontal and vertical movements shall be taken and evaluated by the soils engineer for a period of time sufficient to define the settlement behavior. The evaluation period shall be monitored in accordance with the approved geotechnical report for the project.

(l) Buttress Fills. All buttress fills shall be designed in accordance with the Land Disturbance Design and Construction Standards and the recommendations and design criteria, including the sub-drain system, submitted by the soils engineer or engineering geologist with the approval of the City Engineer.

16.44.370 Erosion Control and Drainage Devices.

BMP's, such as, but not limited to, intervening terraces, diverter terraces, "v" channels, runoff computations, drainage dispersal walls, sub-drains and site drainage, are to be provided and designed as indicated in the LDDCS.

16.44.380 Areas Subject to Slides and Unstable Soil.

A detailed evaluation shall be completed for all areas subject to slides or unstable soils by a soils engineer and/or engineering geologist including design criteria for corrective measures. Exploratory work and/or reports may be required by the City Engineer for such conditions in accordance with permit requirements set forth in Chapter 2 of this Chapter.

16.44.390 Planting and Irrigation of Cut and Fill Slopes.

All manufactured cut and fill slopes shall be planted and maintained until established. Temporary irrigation may be required in accordance with the provisions of this Chapter and the LDDCS. The permit holder is responsible for operating and maintaining the irrigation system.

16.44.400 Property Line and Corner Markers.

The permit holder shall ensure that property lines and corner survey markers are installed for the site or project. These markers are to include rebar placed at the back corners of each lot and markers placed on the curb for locating the side property lines. If curb and gutter do not exist, the front markers are to be placed in the road pavement.

16.44.410 Reserved

16.44.420 Slope Protection Easements.

The permit holder shall provide slope protection easements for all slopes constructed as part of the project. Slope protection easements shall be provided either through indicating them on the final plat or by separate recordable easement acceptable to the City.

16.44.430 Lots Graded Toward Street for Drainage.

Except as otherwise provided herein, storm water runoff from individual lots shall be directed toward the streets. Exceptions may be granted by the City Engineer, when deemed appropriate and necessary, in accordance with the provisions of this Section. Aesthetics reasons such as the creation of view lots shall not constitute sufficient reason for granting an exception. If the permit holder finds that draining storm water toward the street is unobtainable, for a portion or all of the lot, the permit holder shall demonstrate to the City Engineer that there are no other avenues for drainage of the storm water. In such cases, the permit holder shall prepare a drainage plan which indicates how the storm water will be disposed of from the lot, to either a City owned storm drain, a natural stream or channel, a manmade channel, other City-approved facility or retained on-site. The permit holder is responsible for obtaining the necessary approvals and permits for the discharge or retention of storm water flows. The City Engineer will determine if such alternate drainage is both necessary and appropriate.

16.44.440 Lots Which Cannot Be Graded Toward the Street.

(a) Approval Required. Lots that cannot be drained toward the street may be allowed to drain a portion of their storm water runoff toward the rear of the yard, after review and approval by the City Engineer. Prior to obtaining this approval, the permit

holder shall prepare a drainage plan, which indicates how the storm water will be disposed of from the lot, to either a City owned storm drain, a natural stream or channel, or manmade channel, or other City approved facility or retained on-site. Such disposal is to be protected by a drainage easement dedicated for this purpose, and the facilities shall be subject to the bonding provisions set forth in Chapter 16.

(b) Swales. Swales located in rear and side yards shall be of materials as approved by the City that will prevent erosion, and shall be a permanent feature of the lot and shall be shown in a drainage easement on the site plan or final plat for the project. An actual design drawing of the swale system shall be prepared and be included as part of the grading and drainage plan for the project. If slopes exist between lots sufficient space shall be allowed to include a swale at the top of the slope and one at the bottom, all within dedicated storm drainage easements. Where storm water is transferred from a lot of higher elevation, to a lower lot in elevation, sufficient energy dissipation shall be constructed to reduce the water velocity to an acceptable level. Engineering calculations are to be submitted to the Engineering Division certifying the proposed design of the energy dissipation facilities as set forth in the LDDCS.

(c) Notice. Swales shall be constructed and in place before building permits are issued on subdivision lots. The developer shall notify the homebuilders and homeowners shall be notified of these drainage swale easements and the need to maintain them both during and after construction. Homeowners are to be notified by the developer of the installation of these side and rear yard swales through an acceptable instrument to the City. A notice of these drainage swale easements shall also be recorded on the subdivision plat for the project. After completion of the swales, the homeowners shall be responsible for maintenance of swales.

(d) Bonding. In the event these types of swales are used for the project, the Developer shall provide sufficient bonding of these swales as part of the City's regular public improvement bonding, to ensure these facilities will be constructed.

(e) Underground Facilities. The Developer may select the option of designing and constructing underground drainage facilities to replace aboveground drainage swales if these facilities meet certain City requirements. These requirements include the design being approved by the Engineering Division, inclusion of these facilities within City approved drainage easements, maintenance of the system by a Homeowners Association, and other requirements as may be deemed necessary by the City.

16.44.450 Materials for Side and Rear Yard Drainage.

Side and rear yard swales and drainage facilities shall be designed into projects as an integral component of the storm water system of the project which needs to transfer storm water runoff from the rear and side yards to the street, or to other rear yard storm water facilities. These swales or drain facilities shall be designed and constructed in such a way that they become a permanent feature of the side and/or rear yard and shall be constructed of a material as approved by the City which prevents erosion. Inspections of these swales or drain facilities shall be conducted during the subdivision construction phase of the project and during lot level development. Developers are to provide recorded drainage easements wide enough to provide for the possible slight field relocation of rear and side yard drainage swales, or other drainage facilities. At a minimum, the drainage easement shall be for the width of the swale plus two feet (2).

16.44.460 Flow of Water from One Lot to Another Limited Use.

In the case where storm water flow is allowed to flow from a higher lot to a lower lot, in

elevation, sufficient energy dissipation shall be designed and constructed to reduce the water velocity to an acceptable level to prevent erosion. The design and construction of these energy dissipation structures shall be approved by the Engineering Division in conjunction with the review and approval of the drainage plan for the project.

16.44.470 Landscaping of Certain Lots for Erosion Control.

The City reserves the right to require that the lots be re-vegetated or stabilized prior to issuance of building permits or that lots be fully landscaped prior to the issuance of a Certificate of Occupancy, as part of the requirements of the project. The purpose of this requirement is to ensure that, for certain areas in the City, which have soils susceptible to severe erosion, that erosion is controlled. The criteria to be used by the City are the size of the lot and sizes of adjacent lots, elevation differences between lots, and the type of soils in the project, along with other factors. A landscaping plan shall be submitted to the Engineering Division for approval prior to commencement of landscaping improvements required hereunder.

16.44.480 Erosion Control and Revegetation.

The developer is to indicate erosion control and re-vegetation BMP's to be used for the project on the project drawings and as part of the project descriptions included with the application in accordance with the City's LDDCS. Erosion and sedimentation control measures will be inspected upon completion, during construction of the subdivision, and once the subdivision construction is complete. The Engineering Division will be responsible for these inspections. Once the subdivision level construction is complete and improvement work begins on individual lots, erosion and sedimentation control BMP will be inspected prior to any disturbance, during construction and once lot level construction is complete. The Building Division will be responsible for these inspections.

16.44.490 Wet Weather Plan.

The City Engineer may require that land disturbance activities and erosion control or re-vegetation plans be modified, if unforeseen delays occur due to weather generated problems not considered at the time the land disturbance permit was issued, including submission and approval of a wet weather plan.

16.44.500 Land Disturbance Design and Construction Standards.

All land disturbance activities shall be conducted in accordance with the Land Disturbance Design and Construction Standards, the Development Processing Manual, Road Design and Construction Standards, Storm Drainage and Flood Control Design and Construction Standards, Culinary Water Design and Construction Standards and all other applicable ordinances, rules, regulations, standards and specifications of the City.

16.44.510 Lot Impervious Surface Area Drainage.

All impervious surface areas on lots, including roofs and their drains, driveway pads and other such areas, are to be drained toward the street unless otherwise approved by the City Engineer.

16.44.520 Land Disturbance Activities and Improvements Bond.

Prior to issuance of a land disturbance permit, the applicant shall be required to enter into a bond agreement in a form acceptable to the City providing security to insure completion of the land disturbance activities and improvements required to be installed and/or provided pursuant to the provisions of this Chapter and the land disturbance permit. The applicant shall be required to complete all land disturbance activities and improvements in accordance with the terms and conditions of the land disturbance permit, the bond agreement, and all applicable ordinances, resolutions, standards, specifications, and plans. The bond shall be equal to 100% of the engineers estimated cost, and approved by the City Engineer, of the land disturbance activities and improvements to be installed and/or provided. Except as otherwise provided in this Section, the bond shall be administered and processed in accordance with the bond provisions set forth in the City's Subdivision Ordinance regarding bonds and security for subdivision public improvements.

16.44.530 Re-vegetation Bond

Prior to issuance of a land disturbance permit, the applicant shall be required to enter into a re-vegetation bond agreement in a form acceptable to the City providing security to insure installation and completion of re-vegetation improvements required to be installed and/or provided pursuant to the provisions of this Chapter and the land disturbance permit. The applicant shall be required to install and complete all re-vegetation improvements in accordance with the terms and conditions of the land disturbance permit, the bond agreement, and all applicable ordinances, resolutions, standards, specifications and plans. The bond shall be equal to 100% of the engineers estimated cost, and approved by the City Engineer, of the re-vegetation improvements required to be installed and/or provided. Except as otherwise provided in this Section, the re-vegetation bond shall be administered and processed in accordance with the bond provisions set forth in the City's Subdivision Ordinance regarding bonds and security for subdivision public improvements.

16.44.550 Permit Holder Supervision and Inspection.

The land disturbance permit holder shall provide, at the permit holders sole cost and expense, all required supervision, inspection and safety precautions before, during and after all land disturbance activities in accordance with the LDDCS and other applicable City Ordinances, rules, regulations, standards and specifications regarding such activities. The land disturbance permit holder shall be required, at the permit holders sole cost and expense, to design, inspect and certify all land disturbance activities at such intervals and in accordance with such design, inspection and certification standards and requirements provided in the Land Disturbance Design and Construction Standards and other applicable City Ordinances, rules, regulations, standards and specifications. Certain land disturbance activities may require continuous or constant inspection and supervision by a civil engineer or other authorized inspector, as a condition of the land disturbance permit or when deemed necessary by the City Engineer, in accordance with the terms and conditions of this Chapter and the LDDCS.

16.44.560 City Inspections.

In addition to permit holder inspections and certifications, all land disturbance activities shall be subject to City inspection as specified and required in the LDDCS, and other applicable City Ordinances, rules, regulations, standards and specifications. The City may also make or require other inspections of land disturbance activities to ascertain compliance of such work with the land disturbance permit and applicable City Ordinances, rules, regulations, standards and specifications, when deemed necessary by the City Engineer, in accordance with the terms and conditions of this Chapter and the LDDCS.

16.44.570 Additional Inspections or Testing.

The City Engineer may require additional inspections and/or testing of land disturbance activities by an approved testing agency when deemed necessary by the City Engineer in accordance with the terms and conditions of this Chapter and the LDDCS. Any such additional inspections and/or testing shall be at the permit holders expense.

16.44.580 Inspection Requests.

When inspections are required to be conducted by the City, the permit holder, or authorized agent of the permit holder, shall notify the City Engineer or designated Engineering Inspector that such work is ready for inspection at least one (1) business day before the inspection desired.

16.44.590 Duty to Keep Work Accessible and Exposed.

The permit holder shall cause the land disturbance activities and work to be accessible and exposed for inspection by the applicable required inspector until such inspection has been conducted and approved or certified, as applicable. The City, its officers, agents and employees, shall not be liable for any expense incurred by the permit holder in removing or replacing any materials or improvements required to allow inspection.

16.44.600 Entry Onto Premises.

The City, and its authorized representatives, shall have access to the premises described in the land disturbance permit for the purpose of inspecting the progress of the work.

16.44.610 Certification or Approval.

Inspections and certifications required to be made by the permit holders engineer shall be conducted and certification of the same submitted to the City prior to further construction or land disturbance activities. Inspections required to be made by the City shall be conducted and approved by the City prior to further construction or land disturbance activities.

16.44.620 Transfer of Responsibility for Certification.

If the land disturbance permit holder changes the civil engineer, the soils engineer, the engineering geologist, the contractor, or the testing agency of record during the course of permitted work, the land disturbance permit holder shall file an assignment and assumption agreement of the new engineer, contractor or testing agency responsible for certification of the site or project. Such assignment and assumption agreement shall be filed with and approved by the City Engineer.

16.44.630 Final Inspection.

Final inspection of the permitted land disturbance activities shall be conducted by the City. No final inspection of permitted land disturbance activities shall be scheduled or conducted until and unless all work has been completed in accordance with the land disturbance permit, the final approved plans and specifications, and all applicable City Ordinances, rules, regulations, standards and specifications, including, but not limited to, installation of all drainage facilities and protection devices, all required re-vegetation, and all required erosion and sediment control measures. No final inspection shall be scheduled or conducted until the permit holder has submitted, and the City has approved, a post-construction maintenance schedule for the re-vegetation, erosion control and other required improvements.

16.44.640 Building Permits.

No building permit or other development approval shall be given for any property, parcel, site or project for which a land disturbance permit has been issued until final inspection and approval has been given under the land disturbance permit, unless this requirement is waived in writing by the City Engineer.

16.44.650 Validity of Inspection.

Any inspection approval or certification shall not be construed to be an approval of a violation of any of the provisions of this Chapter or any other applicable law, ordinance, rule, regulation, standard or specification. Inspections presuming to give such authority shall be deemed invalid.

16.44.660 Enforcement.

This Chapter is to be enforced pursuant to the provisions set forth herein as applicable. The City Engineer and other Enforcement Authorities are responsible for the enforcement of the provisions of this Chapter.

16.44.670 Violations.

(a) Violations Enumerated. No person shall fail, refuse, or neglect to comply with the following:

(1) Provisions of this Chapter and land disturbance permits issued in accordance with this Chapter

(2) Orders issued by the City Engineer or the Building Official pursuant to the provisions of this Chapter;

(3) Conditions imposed on land disturbance permits pursuant to the provisions of this Chapter; and

(4) Rules and regulations of the office of the City Engineer with respect to grading, which were in effect at the time the land disturbance permit was issued.

(b) Continuing Violation. Each and every day, or portion thereof, during which any violation of any of the provisions of this Chapter is committed, continued, or land disturbance permitted, shall be considered a separate offense.

16.44.680 Remedies and Enforcement Powers.

(a) Nothing herein is intended to limit or prohibit the enforcement of the City of South Jordan Municipal Code or other applicable lawsand /or ordinances through civil or criminal process where the City has determined that enforcement of the procedures outlined in these sections will not result in effective redress, where there have been repeated violations of the provisions of this Chapter, or where the severity of the violation warrants redress through civil or criminal action.

(b) The following sanctions shall be available to redress violations of the provisions of this Chapter:

(1) Issuance of a Notice of Violation;

(2) Revocation or suspension of land disturbance permits, conditional use land disturbance permits or plan or other approvals issued by City of South Jordan;

(3) The placement of requirements for corrective action on land disturbance permits, licenses, or other entitlements issued by City of South Jordan as a condition of the land disturbance permit, license, or entitlement;

(4) Requiring the responsible permit holder to post a bond, irrevocable letter of credit, or other adequate security to ensure compliance with the provisions of this Chapter or other applicable laws;

(5) Withholding of permits, certificates or other forms of authorization pertaining to any land where there exists an uncorrected violation of this Chapter;

(6) Issuance of a stop work order;

(c) Penalties. Violation of any of the provisions of this Chapter shall upon conviction be punishable as a class C misdemeanor.

(d) Other remedies; remedies cumulative. The City shall have such other remedies as are and as may be from time to time provided by State law or City ordinance for the violation of any provision of this Chapter. Remedies shall be cumulative.

(e) At the time of issuance of a notice of violation, the Enforcement Authority will determine the appropriate level of sanction and will provide written notice to the responsible person of the proposed level of sanction and the reasons therefore as outlined herein.

(f) Where multiple violations have occurred or are occurring, each violation of the provisions of this Chapter or other applicable laws is subject to a separate sanction. The City may take into account the number and severity of violations in determining the type of action to take against the offending party.

16.44.690 Notice of Violation.

(a) When a violation is discovered, and the responsible permit holder has not been issued a previous Notice of Violation for the same violation within the past twelve (12) months, the Enforcement Authority shall issue a Notice of Violation in order to notify the responsible person of the violation and to order that the violation be corrected within fourteen (14) calendar days. The notice may include a stop work order that orders the responsible person to immediately cease all work on the project until the violation is corrected. The issuance of a Notice of Violation shall not be a prerequisite for the issuance of a stop work order by the City.

(b) The Notice of Violation shall be in writing and set forth the facts constituting the violation, the specific provisions of the law which have been violated, the proposed sanctions for the violation, and shall require that the City Engineer be contacted within five calendar days if the responsible person disputes the Notice of Violation.

(c) Failure to correct the violation within the amount of time specified in the Notice of Violation may result in issuance of a citation, a stop work order, a notice of intent to suspend or revoke, or other enforcement action as deemed appropriate by the City.

(d) In the case of a violation involving: continuing construction or development, an emergency situation (as reasonably determined by the City), or a violation for which a previous Notice of violation was issued within the past twelve (12) months, the City may use the enforcement powers and remedies available to it under this chapter without prior notice. In such case, notice shall be sent simultaneously with the beginning of enforcement action.

16.44.700 Suspension or Revocation of Land Disturbance Permit.

The City Engineer may suspend or revoke a land disturbance permit and/or suspend any land disturbance activity if:

(a) Conditions at the site vary from those shown on the approved plans;

(b) Construction does not conform to the approved plans, time schedules, or conditions of the land disturbance permit;

(c) The work does not comply with applicable ordinances, rules, regulations and standards;

(d) The site is left in a condition hazardous to the public or to the adjacent properties, and the land disturbance permit holder does not comply with reasonable requirements to correct said conditions;

(e) The land disturbance permit holder does not comply with reasonable requirements to safeguard the workers, the public, or other persons acting in a lawful manner;

(f) The land disturbance permit holder, in connection with the operations for which the land disturbance permit was issued, fails to operate equipment properly on public roads; allows material to encroach into, obstruct, or be deposited within a public road right-of-way or within a drainage channel in a manner not authorized by said land disturbance permit; or causes unauthorized obstruction or diversion of drainage channels;

(g) The land disturbance permit holder fails to have a qualified, City-approved

inspector working under the supervision of a civil engineer on the site during operations, when so required by the land disturbance permit, or fails to have the work under proper supervision;

(h) Emergency conditions exist on the site, which constitute a threat to health, safety or public welfare, whether or not caused by the actions of the land disturbance permit holder; or

(i) The land disturbance permit holder has been issued a Notice of Violation and has failed to correct the violation within the time specified.

16.44.710 Notice of Suspension or Revocation.

Prior to the suspension or revocation of a land disturbance permit, the City Engineer shall give the land disturbance permit holder written notice of intention to suspend or revoke the land disturbance permit, the notice shall specify the grounds for such intended action and the time and place for the holding of a conference between the City Engineer and the land disturbance permit holder, or its authorized representatives, to review the grounds for the proposed action. Notice of the proposed action shall be given to the land disturbance permit holder at least forty-eight (48) hours, before the time set for the conference, if given by personal service, and at least ninety-six (96) hours, before the time set for the conference, if given by first-class mail. Weekends and holidays are not counted in determining the time for the giving of notice and the holding of the conference. With the consent of the land disturbance permit holder, the time periods provided for herein may be shortened or extended.

In the case of an emergency, and only where an unacceptable level of risk to public health, safety and welfare would incur from any delay, the notification deadlines may be disregarded and the City Engineer may act decisively to reduce or eliminate the hazard. In such a situation, the City Engineer will then make every reasonable effort to confer with the land disturbance permit holder in a timely manner to resolve the concerns, which resulted in the suspension. Costs, including additional City staff time and equipment, shall be borne by the land disturbance permit holder.

16.44.720 Cessation of Work.

Upon receipt of the notice of intended suspension or revocation, the land disturbance permit holder is to cease all work in connection with the land disturbance permit, with the exception of work necessary to correct any condition cited in the notice of proposed action as a ground for suspension or revocation, and work of an emergency nature. The time necessary for completion of these emergency corrections will be determined by the City Engineer.

16.44.730 Decision of Suspension or Revocation.

(a) Within twenty-four (24) hours following the conclusion of the conference, the City Engineer or designee is to render a written decision, either revoking the land disturbance permit, suspending the land disturbance permit, or authorizing the land disturbance permit holder to proceed with the work. Such action may be with or without conditions. The decision is to be served upon the land disturbance permit holder by personal service or by first-class mail, postage prepaid, within twenty-four (24) hours after the rendition of the decision.

(b) If the land disturbance permit holder fails to correct the objectionable or emergency conditions causing the revocation or suspension, the City may cause the work

necessary to correct said conditions to be done, and the City may take action against the land disturbance permit holder's security to cover the cost of performing the work.

(c) The City Engineer may either reinstate or revoke any land disturbance permit that has been suspended.

16.44.740 Right of Entry.

In the administration and enforcement of this Chapter, any duly authorized official or employee of the City shall have authority to enter upon the premises of the permitted site for the purposes of investigation and inspection; provided however, that such right of entry shall be exercised at reasonable times. The land disturbance permit constitutes written authority for entry by the City. No land disturbance permit holder shall refuse to allow such inspection. In the case where the responsible person is not a land disturbance permit holder, the Enforcement Authority is to provide twenty-four (24) hours written notice of the intent to inspect, except in emergency situations or when consent has been obtained of the owner and/or occupant of the site to be inspected. The notice shall state that the property owner has the right to refuse entry and that, in the event such entry is refused, inspection may be made only upon issuance of a search warrant as allowed by law.

16.44.750 Appeals.

Any person aggrieved of a final determination of the City Engineer in the issuance, denial, suspension or revocation of a land disturbance permit may appeal such decision of the City Engineer to the City Manager by filing a written appeal with the City Recorder within thirty (30) days from the date of the City Engineers decision. The City Manager will give written notice to the City Engineer, the appellant, and all other persons requesting the same, specifying the place, date, and time of hearing the appeal.

16.44.760 Liability.

Neither issuance of grading approval under the provisions of this Chapter, nor compliance with the provisions this Chapter, or with any conditions imposed in a land disturbance permit issued under the provisions of this Chapter, is to relieve any person from responsibility for damage to any person or property or impose any liability upon the City for damage to any person or property.

16.44.770 Right to Stop Work.

Nothing herein is to be construed as indicating that the City cannot immediately stop the work being performed if, in the opinion of the City Engineer, the damage being done is of such a nature that it requires immediate cessation of the work. This could result in the bypassing of the normal processes of notices and increasing levels of enforcement, which will typically be followed.

16.44.780 Parking Lots

(a) Minimum parking lot grades for asphalt concrete shall be one (1%) percent.
(b) Minimum grade for concrete ribbon drains shall be one-half (1/2%) percent.
(c) Plan Check and Inspection of the parking lot grading, construction of curbs, gutters, drainage or other appurtenant structures, and the paving shall be performed by the Engineering Division. A Land Disturbance Permit shall be obtained from the Engineering Division and inspection fee paid. The City Engineer shall have the authority to request changes to the plan as deemed necessary for drainage and/or circulation.

(d) The contractor shall be responsible for the clearing of the proposed work area, and relocation costs of all utilities. The City will be informed twenty-four (24) hours prior to the beginning of construction.
(e) A compaction report by a soils engineer shall certify ninety (90%) percent sub-base and ninety-five (95%) percent of base prior to calling for second inspection and placement of asphalt paving.
(f) If no preliminary soils report is provided specifying the paving section, the structural section shall be four (4") inches asphalt concrete and eight (8") inches Class II aggregate base.

SECTION 3. Severability. If any section, part or provision of this Ordinance is held invalid or unenforceable, such invalidity or unenforceability shall not affect any other portion of this Ordinance and all sections, parts, provisions and words of this Ordinance shall be severable.

SECTION 4. Effective Date. This Ordinance shall become effective immediately upon publication or posting as required by law.

PASSED AND ADOPTED BY THE CITY COUNCIL OF SOUTH JORDAN CITY, STATE OF UTAH, ON THIS_____DAY OF_____, 2007 BY THE FOLLOWING VOTE:

	YES	NO	ABSTAIN	ABSENT
Kathie L. Johnson	____	____	____	____
Larry Short	____	____	____	____
Aleta A. Taylor	____	____	____	____
Brian C. Butters	____	____	____	____
Leona Winger	____	____	____	____

_____
W. Kent Money, Mayor

ATTEST: _____
Anna M. West, City Recorder

Mayor-William Kent Money
Council Member-Brian C. Butters
Council Member-David W. Colton
Council Member-Bradley G. Marlor
Council Member-Larry Short
Council Member-Leona Winger

City Manager-Ricky A. Horst

SOUTH JORDAN
UTAH

1600 West Towne Center Drive / South Jordan, UT 84095/ Telephone (801) 254-3742 / Fax (801) 254-3393
e-mail: info@sjc.utah.gov http://sjc.utah.gov

LAND DISTURBANCE PERMIT
APPLICATION AND AGREEMENT
Application Fee - $50.00

Date: _____

Name of Applicant: _____

Mailing Address: _____

Phone # (24 Hrs) _____ Fax: _____

Please Check One:
- ☐ Subdivision
- ☐ Site Plan
- ☐ Other Specify _____

Location of Land Disturbance: _____

_____

Purpose of Land Disturbance: _____

_____

Cubic Yards _____ Square Feet _____

Please provide the following:
- ☐ Permit Fee as adopted by the South Jordan City Council ($50.00)
- ☐ Vicinity Map showing the site location
- ☐ Property line, dimensions and bearing of the property
- ☐ Location of existing buildings or structures on the property and adjacent property within 50 feet of property boundary.
- ☐ Accurate topography showing contours of the existing and proposed ground elevations.
- ☐ The elevations, dimensions, locations, extent, and slopes of all proposed land disturbance activities shown by contours.
- ☐ A certification of the quantity and type of material of proposed excavation or fill.
- ☐ The estimated starting and completion dates
- ☐ Detailed plans of all drainage devices, walls, cribbing, dams, or other protective devices to be constructed with or as a part of the proposed work

Mayor-William Kent Money
Council Member-Brian C. Butters
Council Member-David W. Colton
Council Member-Bradley G. Marlor
Council Member-Larry Short
Council Member-Leona Winger

City Manager-Ricky A. Horst

SOUTH JORDAN
UTAH

1600 West Towne Center Drive / South Jordan, UT 84095/ Telephone (801) 254-3742 / Fax (801) 254-3393
e-mail: info@sjc.utah.gov http://sjc.utah.gov

- ☐ Finish Floor Elevation of any proposed structures
- ☐ Temporary construction entrance and exit plan
- ☐ Type of structure to be constructed on site
- ☐ Erosion Control Plan
- ☐ Re-vegetation Plan
- ☐ Copy of notice of intent (NOI) from the State of Utah, "Division of Water Quality"

Conditions of Approval:

1. Applicant shall apply appropriate tackifier to dirt stockpile if requested by the City of South Jordan
2. Applicant shall be responsive to adjacent property owners and will address all concerns expressed in a timely manner.
3. Applicant shall maintain all erosion control measures.
4. The applicant must notify the City Engineer or the Engineering Inspector twenty four (24) hours in advance before any work is started.
5. All public roadway signage shall be in accordance with the Manual of Uniform Traffic Control Devices (MUTCD).

Applicant is required to consult utility companies operating in this area before excavation. In granting this permit the City of South Jordan makes no representation as to the location of utility facilities in the area to be excavated or the affect of the permitted excavation on said utilities.

Prior to beginning any land disturbance activities, property must be protected by barriers which indicate which tree can and cannot be removed and must be inspected by and Engineering Division Inspector.

In consideration for granting of a Land Disturbance Permit by the City of South Jordan, the above-named applicant herby commits to: (1) to perform the excavation applied for in a professional manner and in conformity, with ordinances of the City of South Jordan and; (2) to hold harmless the City of South Jordan, its officers, agents, employees or servants from any and all costs, damages and liabilities that which may accrue or be claimed to accrue by reason of any work performed under a permit issued pursuant to this application.

_____ _____/_____/_____
Signature of Applicant Date

_____ _____/_____/_____
Director of Community Development/City Engineer or designee Date

Engineering Division – Community Development Department
1600 West Towne Center Drive / South Jordan, UT 84095/ Telephone (801) 254-3742 / Fax (801) 254-3393
e-mail: info@sjc.utah.gov http://sjc.utah.gov

Land Disturbance Permit No. LDP-200__- _____

Issuance Date: _____
Project Name: _____
Location: _____
Parcel No.: _____
Applicant Name: _____
Address: _____
Phone #: _____

This permit shall become null and void if work is not commenced with 180 days of the date of issuance, or if work is suspended or abandoned for a period of 30 days or more at any time after the work has commenced. Commencement or continuation of work shall be verified only by inspection reports from the City of South Jordan Engineering Inspectors. Inspections are required before any work is covered. Please call if you need further information about when an inspection is required.

Conditions of approval:

1. Applicant shall apply appropriate tackifier to dirt stockpile if requested by the City of South Jordan
2. Applicant shall be responsive to adjacent property owners and will address all concerns expressed in a timely manner.
3. Applicant shall maintain all erosion control measures.
4. Applicant shall be familiar with the Land Disturbance Ordinance and Land Disturbance Design and Construction Standards.
5. Applicant shall post erosion Control Plan, Notice of Intent (NOI, and Land Disturbance Permit onsite.
6. Applicant shall inspect BMP's every 14 days or after any storm event and record inspection in Inspection Log. Inspection Lof shal be posted and maintained onsite with the erosion control plan.

An additional fee shall be charged for weekend work or after hours as determined by the City Engineer or his designee.

Applicant shall also be advised that any work performed in the public right of way shall require a separate right of way or encroachment permit.

The applicant must notify the City Engineer or the Engineering Inspector twenty four (24) hours in advance before any work is started. Weekend or after hours work requires the Engineering Inspector to be present.

All public roadway signage shall be in accordance with the Manual of Uniform Traffic Control Devices (MUTCD).

Applicant is required to consult utility companies operating in this area before excavation. In granting this permit the City of South Jordan makes no representation as to the location of utility facilities in the area to be excavated or the affect of the permitted excavation on said utilities.

Prior to beginning any land disturbance activities, property must be protected by barriers which indicate which tree can and cannot be removed and must be inspected by and Engineering Division Inspector.

Engineering Division – Community Development Department
1600 West Towne Center Drive / South Jordan, UT 84095/ Telephone (801) 254-3742 / Fax (801) 254-3393
e-mail: info@sjc.utah.gov http://sjc.utah.gov

In consideration for granting of a Land Disturbance Permit by the City of South Jordan, the above-named applicant herby commits to: (1) to perform the excavation applied for in a professional manner and in conformity, with ordinances of the City of South Jordan and; (2) to save harmless the City of South Jordan, its officers, agents, employees or servants from any and all costs, damages and liabilities that which may accrue or be claimed to accrue by reason of any work performed under a permit issued pursuant to this application.

I hereby certify that I have read and examined this permit, the Land Disturbance Ordinance, and the Construction Standards and that the information provided by me is true and correct. All provisions of laws and ordinances governing this type of work will be complied with whether specified herein or not. The granting of a permit does not presume to give authority to violate change the provisions of any other state or local law regulating construction or performance of construction

Signature of Applicant	Date	Please Print Name
Signature of City Engineer or designee	Date	Please Print Name

THIS PERMIT MUST BE POSTED AT THE JOB SITE AT ALL TIMES

Stormwater Pollution Prevention Plan

For:

Insert Project Name
Insert Project Site Location/Address
Insert City, State, Zip Code
Insert Project Site Telephone Number (if applicable)

Operator(s):

Insert Company or Organization Name
Insert Name
Insert Address
Insert City, State, Zip Code
Insert Telephone Number
Insert Fax/Email

SWPPP Contact(s):

Insert Company or Organization Name
Insert Name
Insert Address
Insert City, State, Zip Code
Insert Telephone Number
Insert Fax/Email

SWPPP Preparation Date:

__ __ / __ __ / __ __ __ __

Estimated Project Dates:

Project Start Date: __ __ / __ __ / __ __ __ __
Project Completion Date: __ __ / __ __ / __ __ __ __

Contents

SECTION 1: SITE EVALUATION, ASSESSMENT, AND PLANNING 1
1.1 Project/Site Information 1
1.2 Contact Information/Responsible Parties 2
1.3 Nature and Sequence of Construction Activity 3
1.4 Soils, Slopes, Vegetation, and Current Drainage Patterns 4
1.5 Construction Site Estimates 4
1.6 Receiving Waters 5
1.7 Site Features and Sensitive Areas to be Protected 5
1.8 Potential Sources of Pollution 6
1.9 Endangered Species Certification 7
1.10 Historic Preservation 7
1.11 Applicable Federal, Tribal, State or Local Programs 8
1.12 Maps 8
SECTION 2: EROSION AND SEDIMENT CONTROL BMPS 9
2.1 Minimize Disturbed Area and Protect Natural Features and Soil 10
2.2 Phase Construction Activity 10
2.3 Control Stormwater Flowing onto and through the Project 11
2.4 Stabilize Soils 11
2.5 Protect Slopes 12
2.6 Protect Storm Drain Inlets 13
2.7 Establish Perimeter Controls and Sediment Barriers 13
2.8 Retain Sediment On-Site 14
2.9 Establish Stabilized Construction Exits 15
2.10 Additional BMPs 16
SECTION 3: GOOD HOUSEKEEPING BMPS 17
3.1 Material Handling and Waste Management 17
3.2 Establish Proper Building Material Staging Areas 18
3.3 Designate Washout Areas 18
3.4 Establish Proper Equipment/Vehicle Fueling and Maintenance Practices 19
3.5 Control Equipment/Vehicle Washing 20
3.6 Spill Prevention and Control Plan 20
3.7 Any Additional BMPs 21
3.8 Allowable Non-Stormwater Discharge Management 22
SECTION 4: SELECTING POST-CONSTRUCTION BMPs 23
SECTION 5: INSPECTIONS 24
5.1 Inspections 24
5.2 Delegation of Authority 25
5.3 Corrective Action Log 25
SECTION 6: RECORDKEEPING AND TRAINING 26
6.1 Recordkeeping 26
6.2 Log of Changes to the SWPPP 26
6.3 Training 27
SECTION 7: FINAL STABILIZATION 28

SECTION 8: CERTIFICATION AND NOTIFICATION..... 29
SWPPP APPENDICES 30
Appendix A – General Location Map
Appendix B – Site Maps
Appendix C – Construction General Permit
Appendix D – NOI and Acknowledgement Letter from EPA/State
Appendix E – Inspection Reports
Appendix F – Corrective Action Log (or in Part 5.3)
Appendix G – SWPPP Amendment Log (or in Part 6.2)
Appendix H – Subcontractor Certifications/Agreements
Appendix I – Grading and Stabilization Activities Log (or in Part 6.1)
Appendix J – Training Log
Appendix K – Delegation of Authority
Appendix L – Additional Information (i.e., Endangered Species and Historic Preservation Documentation)

Storm Water Pollution Prevention Plan (SWPPP)

1. When Required: SWPPP
   A. Any construction activities as required under the Utah Pollutant Discharge and Elimination System (UPDES) permits.

      1) Construction sites with a land disturbance of greater than or equal to one acre, including projects less than one acre that are part of a larger common plan of development or sale.

      2) Any construction activity the City Engineer or Designee deems to pose a unique threat to water quality, air quality, or public health or safety.

   B. SWPPP will be managed through the South Jordan City online storm water management system.

SECTION 1: SITE EVALUATION, ASSESSMENT, AND PLANNING

1.1 Project/Site Information

Instructions:

- Detailed information on determining your site's latitude and longitude can be found at www.epa.gov/npdes/stormwater/latlong

Project/Site Name: _____

Project Street/Location: _____

City: _____ State: _____ ZIP Code: _____

County or Similar Subdivision: _____

Latitude/Longitude (Use **one** of three possible formats, and specify method)

Latitude:	Longitude:
1. _ _ º _ _ ' _ _" N (degrees, minutes, seconds)	1. _ _ º _ _ ' _ _" W (degrees, minutes, seconds)
2. _ _ º _ _ . _ _' N (degrees, minutes, decimal)	2. _ _ º _ _ . _ _' W (degrees, minutes, decimal)
3. _ _ . _ _ _ _ º N (decimal)	3. _ _ . _ _ _ _ º W (decimal)

Method for determining latitude/longitude:

☐ USGS topographic map (specify scale: _____) ☐ EPA Web site ☐ GPS

☐ Other (please specify): _____

Is the project located in Indian country? ☐ Yes ☐ No

If yes, name of Reservation, or if not part of a Reservation, indicate "not applicable."_____

_____

Is this project considered a federal facility? ☐ Yes ☐ No

UPDES project or permit tracking number*:_____

**(This is the unique identifying number assigned to your project by your permitting authority after you have applied for coverage under the Utah Pollutant Discharge Elimination System (UPDES) construction general permit.)*

1.2 Contact Information/Responsible Parties

Instructions:

- List the operator(s), project managers, stormwater contact(s), and person or organization that prepared the SWPPP. Indicate respective responsibilities, where appropriate.
- Also, list subcontractors expected to work on-site. Notify subcontractors of stormwater requirements applicable to their work.

Operator(s):

Insert Company or Organization Name:
Insert Name:
Insert Address:
Insert City, State, Zip Code:
Insert Telephone Number:
Insert Fax/Email:
Insert area of control (if more than one operator at site):
Repeat as necessary

Project Manager(s) or Site Supervisor(s):

Insert Company or Organization Name:
Insert Name:
Insert Address:
Insert City, State, Zip Code:
Insert Telephone Number:
Insert Fax/Email:
Insert area of control (if more than one operator at site) :
Repeat as necessary

SWPPP Contact(s):

Insert Company or Organization Name:
Insert Name:
Insert Address:
Insert City, State, Zip Code:
Insert Telephone Number:
Insert Fax/Email:
Insert area of control (if more than one operator at site) :
Repeat as necessary

This SWPPP was Prepared by:

Insert Company or Organization Name:
Insert Name:
Insert Address:
Insert City, State, Zip Code:
Insert Telephone Number:
Insert Fax/Email:

Subcontractor(s):

Insert Company or Organization Name:
Insert Name:
Insert Address:
Insert City, State, Zip Code:
Insert Telephone Number:
Insert Fax/Email:
Repeat as necessary

Emergency 24-Hour Contact:

Insert Company or Organization Name:
Insert Name:
Insert Telephone Number:

1.3 Nature and Sequence of Construction Activity

Instructions:

- Briefly describe the nature of the construction activity and approximate time frames (one or more paragraphs, depending on the nature and complexity of the project).

Describe the general scope of the work for the project, major phases of construction, etc:
INSERT TEXT HERE

What is the function of the construction activity?

☐ Residential ☐ Commercial ☐ Industrial ☐ Road Construction ☐ Linear Utility
☐ Other (please specify):

Estimated Project Start Date: __ __ / __ __ / __ __ __ __
Estimated Project Completion Date: __ __ / __ __ / __ __ __ __

1.4 Soils, Slopes, Vegetation, and Current Drainage Patterns

Instructions:

- Describe the existing soil conditions at the construction site including soil types, slopes and slope lengths, drainage patterns, and other topographic features that might affect erosion and sediment control.
- Also, note any historic site contamination evident from existing site features and known past usage of the site.
- This information should also be included on your site maps.

Soil type(s):

Slopes (describe current slopes and note any changes due to grading or fill activities):

Drainage Patterns (describe current drainage patterns and note any changes dues to grading or fill activities):

Vegetation:

Other:

1.5 Construction Site Estimates

Instructions:

- Estimate the area to be disturbed by excavation, grading, or other construction activities, including dedicated off-site borrow and fill areas.
- Calculate the percentage of impervious surface area before and after construction
- Calculate the runoff coefficients before and after construction.

The following are estimates of the construction site.

Total project area:	acres
Construction site area to be disturbed:	acres
Percentage impervious area before construction:	%
Runoff coefficient before construction:	
Percentage impervious area after construction:	%
Runoff coefficient after construction	

1.6 Receiving Waters

Instructions:

- List the waterbody(s) that would receive stormwater from your site, including streams, rivers, lakes, coastal waters, and wetlands. Describe each as clearly as possible, such as *Mill Creek, a tributary to the Potomac River*, and so on.
- Indicate the location of all waters, including wetlands, on the site map.
- Note any stream crossings, if applicable.
- List the storm sewer system or drainage system that stormwater from your site could discharge to and the waterbody(s) that it ultimately discharges to.
- If any of the waterbodies above are impaired and/or subject to Total Maximum Daily Loads (TMDLs), please list the pollutants causing the impairment and any specific requirements in the TMDL(s) that are applicable to construction sites. Your SWPPP should specifically include measures to prevent the discharge of these pollutants.
- In addition, for more information and a list of TMDL contacts and links by state, visit www.epa.gov/npdes/stormwater/tmdl.

Description of receiving waters:

Description of storm sewer systems:

Description of impaired waters or waters subject to TMDLs:

Other:

1.7 Site Features and Sensitive Areas to be Protected

Instructions:

- Describe unique site features including streams, stream buffers, wetlands, specimen trees, natural vegetation, steep slopes, or highly erodible soils that are to be preserved.
- Describe measures to protect these features.
- Include these features and areas on your site maps.

Description of unique features that are to be preserved:

Describe measures to protect these features:

1.8 Potential Sources of Pollution

Instructions:

- Identify and list all potential sources of sediment, which may reasonably be expected to affect the quality of stormwater discharges from the construction site.
- Identify and list all potential sources of pollution, other than sediment, which may reasonably be expected to affect the quality of stormwater discharges from the construction site.

Potential sources of sediment to stormwater runoff:
INSERT TEXT OR TABLE HERE
Potential pollutants and sources, other than sediment, to stormwater runoff:
INSERT TEXT OR USE TABLE BELOW

Trade Name Material	Stormwater Pollutants	Location

1.9 Endangered Species Certification

Instructions:

- Before beginning construction, determine whether endangered or threatened species or their critical habitats are on or near your site.
- Adapt this section as needed for state or tribal endangered species requirements and, if applicable, document any measures deemed necessary to protect endangered or threatened species or their critical habitats.

Are endangered or threatened species and critical habitats on or near the project area?

☐ Yes ☐ No

Describe how this determination was made:

INSERT TEXT HERE

If yes, describe the species and/or critical habitat:

INSERT TEXT HERE

If yes, describe or refer to documentation that determines the likelihood of an impact on identified species and/or habitat and the steps taken to address that impact. (Note, if species are on or near your project site, EPA strongly recommends that the site operator work closely with the appropriate field office of the U.S. Fish and Wildlife Service or National Marine Fisheries Service. For concerns related to state or tribal listing of species, please contact a state or tribal official.)

INSERT TEXT HERE

1.10 Historic Preservation

Instructions:

- Before you begin construction, you should review federal and any applicable state, local, or tribal historic preservation laws and determine if there are historic sites on or near your project. If so, you might need to make adjustments to your construction plans or to your stormwater controls to ensure that these historic sites are not damaged.

Are there any historic sites on or near the construction site?

☐ Yes ☐ No

Describe how this determination was made:

INSERT TEXT HERE

If yes, describe or refer to documentation that determines the likelihood of an impact on this historic site and the steps taken to address that impact.

INSERT TEXT HERE

1.11 Applicable Federal, Tribal, State or Local Programs

Instructions:

- Note other applicable federal, tribal, state or local soil and erosion control and stormwater management requirements that apply to your construction site.

INSERT TEXT HERE

1.12 Maps

Instructions:

- Attach site maps. For most projects, a series of site maps is recommended. The first should show the undeveloped site and its current features. An additional map or maps should be created to show the developed site or for more complicated sites show the major phases of development.

These maps should include the following:

- Direction(s) of stormwater flow and approximate slopes before and after major grading activities;
- Areas and timing of soil disturbance;
- Areas that will not be disturbed;
- Natural features to be preserved;
- Locations of major structural and non-structural BMPs identified in the SWPPP;
- Locations and timing of stabilization measures;
- Locations of off-site material, waste, borrow, or equipment storage areas;
- Locations of all waters of the United States, including wetlands;
- Locations where stormwater discharges to a surface water;
- Locations of storm drain inlets; and
- Areas where final stabilization has been accomplished.

Include the site maps with the SWPPP.

SECTION 2: EROSION AND SEDIMENT CONTROL BMPS

Instructions:

- Describe the BMPs that will be implemented to control pollutants in stormwater discharges. For each major activity identified, do the following
  - ✓ Clearly describe appropriate control measures.
  - ✓ Describe the general sequence during the construction process in which the measures will be implemented.
  - ✓ Describe the maintenance and inspection procedures that will be used for that specific BMP.
  - ✓ Include protocols, thresholds, and schedules for cleaning, repairing, or replacing damaged or failing BMPs.
  - ✓ Identify staff responsible for maintaining BMPs.
  - ✓ (If your SWPPP is shared by multiple operators, indicate the operator responsible for each BMP.)
- Categorize each BMP under one of the following 10 areas of BMP activity as described below:
  - *2.1 Minimize disturbed area and protect natural features and soil*
  - *2.2 Phase Construction Activity*
  - *2.3 Control Stormwater flowing onto and through the project*
  - *2.4 Stabilize Soils*
  - *2.5 Protect Slopes*
  - *2.6 Protect Storm Drain Inlets*
  - *2.7 Establish Perimeter Controls and Sediment Barriers*
  - *2.8 Retain Sediment On-Site and Control Dewatering Practices*
  - *2.9 Establish Stabilized Construction Exits*
  - *2.10 Any Additional BMPs*
- Note the location of each BMP on your site map(s).
- For any structural BMPs, you should provide design specifications and details and refer to them. Attach them as appendices to the SWPPP or within the text of the SWPPP.
- For more information or ideas on BMPs, see EPA's National Menu of BMPs http://www.epa.gov/npdes/stormwater/menuofbmps

2.1 Minimize Disturbed Area and Protect Natural Features and Soil

Instructions:

- Describe the areas that will be disturbed with each phase of construction and the methods (e.g., signs, fences) that you will use to protect those areas that should not be disturbed. Describe natural features identified earlier and how each will be protected during construction activity. Also describe how topsoil will be preserved. Include these areas and associated BMPs on your site map(s) also.
- Also, see EPA's *Preserving Natural Vegetation BMP Fact Sheet* at www.epa.gov/npdes/stormwater/menuofbmps/construction/perserve_veg

INSERT TEXT or TABLE HERE, include inspection and maintenance schedules as appropriate and staff responsible for maintenance

2.2 Phase Construction Activity

Instructions:

- Describe the intended construction sequencing and timing of major activities, including any opportunities for phasing grading and stabilization activities to minimize the overall amount of disturbed soil that will be subject to potential erosion at one time. Also, describe opportunities for timing grading and stabilization so that all or a majority of the soil disturbance occurs during a time of year with less erosion potential (i.e., during the dry or less windy season). It might be useful to develop a separate, detailed site map for each phase of construction.
- Also, see EPA's *Construction Sequencing BMP Fact Sheet* at http://www.epa.gov/npdes/stormwater/menuofbmps/construction/cons_seq)

- Phase I
  - Describe phase
  - Duration of phase (start date, end date)
  - List BMPs associated with this phase
  - Describe stabilization methods for this phase (describe any temporary stabilization methods that will be used before final stabilization)

- Phase II
  - Describe phase
  - Duration of phase (start date, end date)
  - List BMPs associated with this phase
  - Describe stabilization methods for this phase (describe any temporary stabilization methods that will be used before final stabilization)

Repeat as needed

2.3 Control Stormwater Flowing onto and through the Project

Instructions:

- Describe structural practices (e.g., diversions, berms, ditches, storage basins) including design specifications and details used to divert flows from exposed soils, retain or detain flows, or otherwise limit runoff and the discharge of pollutants from exposed areas of the site.

BMP Description:	
Installation Schedule:	
Maintenance and Inspection:	
Responsible Staff:	

***BMP Description*:**	
***Installation Schedule*:**	
***Maintenance and Inspection*:**	
***Responsible Staff*:**	

Repeat as needed

2.4 Stabilize Soils

Instructions:

- Describe controls (e.g., interim seeding with native vegetation, hydroseeding) to stabilize exposed soils where construction activities have temporarily or permanently ceased. Also describe measures to control dust generation. Avoid using impervious surfaces for stabilization whenever possible.
- Also, see EPA's *Seeding BMP Fact Sheet* at www.epa.gov/npdes/stormwater/menuofbmps/construction/seeding

BMP Description:	
☐ ***Permanent***	☐ ***Temporary***
Installation Schedule:	
Maintenance and Inspection:	
Responsible Staff:	

BMP Description:	
☐ ***Permanent***	☐ ***Temporary***
Installation Schedule:	
Maintenance and Inspection:	
Responsible Staff:	

Repeat as needed

2.5 Protect Slopes

Instructions:

- Describe controls (e.g., erosion control blankets, tackifiers) including design specifications and details that will be implemented to protect all slopes.
- Also, see EPA's *Geotextiles BMP Fact Sheet* at www.epa.gov/npdes/stormwater/menuofbmps/construction/geotextiles

BMP Description:	
Installation Schedule:	
Maintenance and Inspection:	
Responsible Staff:	

BMP Description:	
Installation Schedule:	
Maintenance and Inspection:	
Responsible Staff:	

Repeat as needed

2.6 Protect Storm Drain Inlets

Instructions:

- Describe controls (e.g., inserts, rock-filled bags, or block and gravel) including design specifications and details that will be implemented to protect all inlets receiving stormwater from the project during the entire project.
- Also, see EPA's *Storm Drain Inlet Protection BMP Fact Sheet* at www.epa.gov/npdes/stormwater/menuofbmps/construction/storm_drain

BMP Description:	
Installation Schedule:	
Maintenance and Inspection:	
Responsible Staff:	

BMP Description:	
Installation Schedule:	
Maintenance and Inspection:	
Responsible Staff:	

Repeat as needed

2.7 Establish Perimeter Controls and Sediment Barriers

Instructions:

- Describe structural practices (e.g., silt fences or fiber rolls) including design specifications and details to filter and trap sediment before it leaves the construction site.
- Also see, EPA's *Silt Fence BMP Fact Sheet* at www.epa.gov/npdes/stormwater/menuofbmps/construction/silt_fences, or *Fiber Rolls BMP Fact Sheet* at www.epa.gov/npdes/stormwater/menuofbmps/construction/fiber_rolls

BMP Description:	
Installation Schedule:	
Maintenance and Inspection:	
Responsible Staff:	

BMP Description:	
Installation Schedule:	
Maintenance and Inspection:	
Responsible Staff:	

Repeat as needed

2.8 Retain Sediment On-Site

Instructions:

- Describe sediment control practices (e.g., sediment trap or sediment basin), including design specifications and details (volume, dimensions, outlet structure) that will be implemented at the construction site to retain sediments on-site.
- Also, see EPA's *Sediment Basin BMP Fact Sheet* at www.epa.gov/npdes/stormwater/menuofbmps/construction/sediment_basins

BMP Description:	
Installation Schedule:	
Maintenance and Inspection:	
Responsible Staff:	

BMP Description:	
Installation Schedule:	
Maintenance and Inspection:	
Responsible Staff:	

Repeat as needed

2.9 Establish Stabilized Construction Exits

Instructions:

- Describe location(s) of vehicle entrance(s) and exit(s), procedures to remove accumulated sediment off-site (e.g., vehicle tracking), and stabilization practices (e.g., stone pads or wash racks or both) to minimize off-site vehicle tracking of sediments and discharges to stormwater.
- Also, see EPA's *Construction Entrances BMP Fact Sheet* at www.epa.gov/npdes/stormwater/menuofbmps/construction/cons_entrance

BMP Description:	
Installation Schedule:	
Maintenance and Inspection:	
Responsible Staff:	

BMP Description:	
Installation Schedule:	
Maintenance and Inspection:	
Responsible Staff:	

Repeat as needed

2.10 Additional BMPs

Instructions:

- Describe additional BMPs that do not fit into the above categories.

BMP Description:	
Installation Schedule:	
Maintenance and Inspection:	
Responsible Staff:	

BMP Description:	
Installation Schedule:	
Maintenance and Inspection:	
Responsible Staff:	

Repeat as needed

SECTION 3: GOOD HOUSEKEEPING BMPS

Instructions:

- Describe the key good housekeeping and pollution prevention (P2) BMPs that will be implemented to control pollutants in stormwater.
- Categorize each good housekeeping and pollution prevention (P2) BMP under one of the following seven categories:
  - *3.1 Material Handling and Waste Management*
  - *3.2 Establish Proper Building Material Staging Areas*
  - *3.3 Designate Washout Areas*
  - *3.4 Establish Proper Equipment/Vehicle Fueling and Maintenance Practices*
  - *3.5 Allowable Non-Stormwater Discharges and Control Equipment/Vehicle Washing*
  - *3.6 Spill Prevention and Control Plan*
  - *3.7 Any Additional BMPs*
- For more information or ideas on BMPs, see EPA's National Menu of BMPs http://www.epa.gov/npdes/stormwater/menuofbmps

3.1 Material Handling and Waste Management

Instructions:

- Describe measures (e.g., trash disposal, sanitary wastes, recycling, and proper material handling) to prevent the discharge of solid materials to receiving waters, except as authorized by a permit issued under section 404 of the CWA
- Also, see EPA's *General Construction Site Waste Management BMP Fact Sheet* at www.epa.gov/npdes/stormwater/menuofbmps/construction/cons_wasteman

BMP Description:	
Installation Schedule:	
Maintenance and Inspection:	
Responsible Staff:	

BMP Description:	
Installation Schedule:	
Maintenance and Inspection:	
Responsible Staff:	

Repeat as needed

3.2 Establish Proper Building Material Staging Areas

Instructions:

- Describe construction materials expected to be stored on-site and procedures for storage of materials to minimize exposure of the materials to stormwater.

BMP Description:	
Installation Schedule:	
Maintenance and Inspection:	
Responsible Staff:	

BMP Description:	
Installation Schedule:	
Maintenance and Inspection:	
Responsible Staff:	

Repeat as needed

3.3 Designate Washout Areas

Instructions:

- Describe location(s) and controls to eliminate the potential for discharges from washout areas for concrete mixers, paint, stucco, and so on.
- Also, see EPA's *Concrete Washout BMP Fact Sheet* at www.epa.gov/npdes/stormwater/menuofbmps/construction/concrete_wash

BMP Description:	
Installation Schedule:	
Maintenance and Inspection:	
Responsible Staff:	

BMP Description:	
Installation Schedule:	
Maintenance and Inspection:	
Responsible Staff:	

Repeat as needed

3.4 Establish Proper Equipment/Vehicle Fueling and Maintenance Practices

Instructions:

- Describe equipment/vehicle fueling and maintenance practices that will be implemented to control pollutants to stormwater
- Also, see EPA's *Vehicle Maintenance and Washing Areas BMP Fact Sheet* at www.epa.gov/npdes/stormwater/menuofbmps/construction/vehicile_maintain

BMP Description:	
Installation Schedule:	
Maintenance and Inspection:	
Responsible Staff:	

BMP Description:	
Installation Schedule:	
Maintenance and Inspection:	
Responsible Staff:	

Repeat as needed

3.5 Control Equipment/Vehicle Washing

Instructions:

- Describe equipment/vehicle washing practices that will be implemented to control pollutants to stormwater.
- Also, see EPA's *Vehicle Maintenance and Washing Areas BMP Fact Sheet* at www.epa.gov/npdes/stormwater/menuofbmps/construction/vehicile_maintain

BMP Description:	
Installation Schedule:	
Maintenance and Inspection:	
Responsible Staff:	

BMP Description:	
Installation Schedule:	
Maintenance and Inspection:	
Responsible Staff:	

Repeat as needed

3.6 Spill Prevention and Control Plan

Instructions:

- Describe the spill prevention and control plan to include ways to reduce the chance of spills, stop the source of spills, contain and clean up spills, dispose of materials contaminated by spills, and train personnel responsible for spill prevention and control.
- Also, see EPA's *Spill Prevention and Control Plan BMP Fact sheet* at www.epa.gov/npdes/stormwater/menuofbmps/construction/spill_control

INSERT TEXT HERE or REFERENCE ATTACHMENT

3.7 Any Additional BMPs

Instructions:

- Describe any additional BMPs that do not fit into the above categories. Indicate the problem they are intended to address.

BMP Description:	
Installation Schedule:	
Maintenance and Inspection:	
Responsible Staff:	

BMP Description:	
Installation Schedule:	
Maintenance and Inspection:	
Responsible Staff:	

Repeat as needed

3.8 Allowable Non-Stormwater Discharge Management

Instructions:

- Identify all allowable sources of non-stormwater discharges that are not identified. The allowable non-stormwater discharges identified might include the following (see your permit for an exact list):
  - ✓ Waters used to wash vehicles where detergents are not used
  - ✓ Water used to control dust
  - ✓ Potable water including uncontaminated water line flushings
  - ✓ Routine external building wash down that does not use detergents
  - ✓ Pavement wash waters where spills or leaks of toxic or hazardous materials have not occurred (unless all spilled material has been removed) and where detergents are not used
  - ✓ Uncontaminated air conditioning or compressor condensate
  - ✓ Uncontaminated ground water or spring water
  - ✓ Foundation or footing drains where flows are not contaminated with process materials such as solvents
  - ✓ Uncontaminated excavation dewatering
  - ✓ Landscape irrigation
- Identify measures used to eliminate or reduce these discharges and the BMPs used to prevent them from becoming contaminated.

List allowable non-stormwater discharges and the measures used to eliminate or reduce them and to prevent them from becoming contaminated:

BMP Description:	
Installation Schedule:	
Maintenance and Inspection:	
Responsible Staff:	

BMP Description:	
Installation Schedule:	
Maintenance and Inspection:	
Responsible Staff:	

Repeat as needed

SECTION 4: SELECTING POST-CONSTRUCTION BMPs

Instructions:

- Describe all post-construction stormwater management measures that will be installed during the construction process to control pollutants in stormwater discharges after construction operations have been completed. Examples of post-construction BMPs include the following:
  - ✓ Biofilters
  - ✓ Detention/retention devices
  - ✓ Earth dikes, drainage swales, and lined ditches
  - ✓ Infiltration basins
  - ✓ Porous pavement
  - ✓ Other proprietary permanent structural BMPs
  - ✓ Outlet protection/velocity dissipation devices
  - ✓ Slope protection
  - ✓ Vegetated strips and/or swales
- Identify any applicable federal, state, local, or tribal requirements for design or installation.
- Describe how low-impact designs or smart growth considerations have been incorporated into the design.
- For any structural BMPs, you should have design specifications and details and refer to them. Attach them as appendices to the SWPPP or within the text of the SWPPP.
- Visit the post-construction section of EPA's Menu of BMPs at: www.epa.gov/npes/menuofbmps

BMP Description:	
Installation Schedule:	
Maintenance and Inspection:	
Responsible Staff:	

BMP Description:	
Installation Schedule:	
Maintenance and Inspection:	
Responsible Staff:	

Repeat as needed

SECTION 5: INSPECTIONS

5.1 Inspections

Instructions:

- Identify the individual(s) responsible for conducting inspections and describe their qualifications. Reference or attach the inspection form that will be used.
- Describe the frequency that inspections will occur at your site including any correlations to storm frequency and intensity.
- Note that inspection details for particular BMPs should be included in Sections 2 and 3.
- You should also document the repairs and maintenance that you undertake as a result of your inspections. These actions can be documented in the corrective action log described in Part 5.3 below.

1. ***Inspection Personnel:*** Identify the person(s) who will be responsible for conducting inspections and describe their qualifications:

2. ***Inspection Schedule and Procedures:***

   Describe the inspection schedules and procedures you have developed for your site (include frequency of inspections for each BMP or group of BMPs, indicate when you will inspect, e.g., before/during/and after rain events, spot inspections):

   Describe the general procedures for correcting problems when they are identified. Include responsible staff and time frames for making corrections:

   Attach a copy of the inspection report you will use for your site.
   REFERENCE ATTACHMENT

5.2 Delegation of Authority

Instructions:

- Identify the individual(s) or specifically describe the position where the construction site operator has delegated authority for the purposes of signing inspection reports, certifications, or other information.
- Attach the delegation of authority form that will be used.

Duly Authorized Representative(s) or Position(s):

Insert Company or Organization Name:
Insert Name:
Insert Position:
Insert Address:
Insert City, State, Zip Code:
Insert Telephone Number:
Insert Fax/Email:

Attach a copy of the signed delegation of authority form in Appendix K.

5.3 Corrective Action Log

Instructions:

- Create here, or as an attachment, a corrective action log. This log should describe repair, replacement, and maintenance of BMPs undertaken as a result of the inspections and maintenance procedures described above. Actions related to the findings of inspections should reference the specific inspection report.
- This log should describe actions taken, date completed, and note the person that completed the work.

Corrective Action Log:
INSERT LOG HERE or REFERENCE ATTACHMENT

SECTION 6: RECORDKEEPING AND TRAINING

6.1 Recordkeeping

Instructions:

- The following is a list of records you should keep at your project site available for inspectors to review:
- Dates of grading, construction activity, and stabilization (which is covered in Sections 2 and 3)
- A copy of the construction general permit (attach)
- The signed and certified NOI form or permit application form (attach)
- A copy of the letter from EPA or/the state notifying you of their receipt of your complete NOI/application (attach)
- Inspection reports (attach)
- Records relating to endangered species and historic preservation (attach)
- Check your permit for additional details

Records will be retained for a minimum period of at least 3 years after the permit is terminated.

Date(s) when major grading activities occur:
INSERT LOG HERE or REFERENCE ATTACHMENT
Date(s) when construction activities temporarily or permanently cease on a portion of the site:
INSERT LOG HERE or REFERENCE ATTACHMENT
Date(s) when an area is either temporarily or permanently stabilized:
INSERT LOG HERE or REFERENCE ATTACHMENT

6.2 Log of Changes to the SWPPP

Instructions:

- Create a log here, or as an attachment, of changes and updates to the SWPPP. You should include additions of new BMPs, replacement of failed BMPs, significant changes in the activities or their timing on the project, changes in personnel, changes in inspection and maintenance procedures, updates to site maps, and so on.

Log of changes and updates to the SWPPP
INSERT LOG HERE or REFERENCE ATTACHMENT

6.3 Training

Instructions:

- Training your staff and subcontractors is an effective BMP. As with the other steps you take to prevent stormwater problems at your site, you should document the training that you conduct for your staff, for those with specific stormwater responsibilities (e.g. installing, inspecting, and maintaining BMPs), and for subcontractors.
- Include dates, number of attendees, subjects covered, and length of training.

Individual(s) Responsible for Training:
INSERT TEXT or TABLE HERE
Describe Training Conducted:

- General stormwater and BMP awareness training for staff and subcontractors:
- Detailed training for staff and subcontractors with specific stormwater responsibilities:

SECTION 7: FINAL STABILIZATION

Instructions:

- Describe procedures for final stabilization. If you complete major construction activities on part of your site, you can document your final stabilization efforts for that portion of the site. Many permits will allow you to then discontinue inspection activities in these areas (be sure to check your permit for exact requirements). You can amend or add to this section as areas of your project are finally stabilized.
- Update your site plans to indicate areas that have achieved final stabilization.
- Note that dates for areas that have achieved final stabilization should be included in Section 6, Part 6.1 of this SWPPP.

BMP Description:	
Installation Schedule:	
Maintenance and Inspection:	
Responsible Staff:	

BMP Description:	
Installation Schedule:	
Maintenance and Inspection:	
Responsible Staff:	

Repeat as needed

SECTION 8: CERTIFICATION AND NOTIFICATION

Instructions:

- The SWPPP should be signed and certified by the construction operator(s). Attach a copy of the NOI and permit authorization letter received from EPA or the state in Appendix D.

I certify under penalty of law that this document and all attachments were prepared under my direction or supervision in accordance with a system designed to assure that qualified personnel properly gathered and evaluated the information submitted. Based on my inquiry of the person or persons who manage the system, or those persons directly responsible for gathering the information, the information submitted is, to the best of my knowledge and belief, true, accurate, and complete. I am aware that there are significant penalties for submitting false information, including the possibility of fine and imprisonment for knowing violations.

Name: _____ Title: _____

Signature: _____ Date: _____

Repeat as needed for multiple construction operators at the site

SWPPP APPENDICES

Attach the following documentation to the SWPPP:

Appendix A – General Location Map

Appendix B – Site Maps

Appendix C – Construction General Permit

Appendix D – NOI and Acknowledgement Letter from EPA/State

Appendix E – Inspection Reports

Appendix F – Corrective Action Log (or in Part 5.3)

Appendix G – SWPPP Amendment Log (or in Part 6.2)

Appendix H – Subcontractor Certifications/Agreements

Appendix I – Grading and Stabilization Activities Log (or in Part 6.1)

Appendix J – Training Log

Appendix K – Delegation of Authority

Appendix L – Additional Information (i.e., Endangered Species and Historic Preservation Documentation)

Appendix F –Corrective Action Log

Project Name:
SWPPP Contact:

Inspection Date	Inspector Name(s)	Description of BMP Deficiency	Corrective Action Needed (including planned date/responsible person)	Date Action Taken/Responsible person

Appendix G –SWPPP Amendment Log

Project Name:
SWPPP Contact:

Amendment No.	Description of the Amendment	Date of Amendment	Amendment Prepared by [Name(s) and Title]

Appendix H –Subcontractor Certifications/Agreements

SUBCONTRACTOR CERTIFICATION
STORMWATER POLLUTION PREVENTION PLAN

Project Number: _____

Project Title: _____

Operator(s): _____

As a subcontractor, you are required to comply with the Stormwater Pollution Prevention Plan (SWPPP) for any work that you perform on-site. Any person or group who violates any condition of the SWPPP may be subject to substantial penalties or loss of contract. You are encouraged to advise each of your employees working on this project of the requirements of the SWPPP. A copy of the SWPPP is available for your review at the office trailer.

Each subcontractor engaged in activities at the construction site that could impact stormwater must be identified and sign the following certification statement:

I certify under the penalty of law that I have read and understand the terms and conditions of the SWPPP for the above designated project and agree to follow the BMPs and practices described in the SWPPP.

This certification is hereby signed in reference to the above named project:

Company: _____

Address: _____

Telephone Number: _____

Type of construction service to be provided: _____

_____

_____

Signature: _____

Title: _____

Date: _____

Appendix I –Grading and Stabilization Activities Log

Project Name:
SWPPP Contact:

Date Grading Activity Initiated	Description of Grading Activity	Date Grading Activity Ceased (Indicate Temporary or Permanent)	Date When Stabilization Measures are Initiated	Description of Stabilization Measure and Location

Appendix J –SWPPP Training Log

Stormwater Pollution Prevention Training Log

Project Name:

Project Location:

Instructor's Name(s):

Instructor's Title(s):

Course Location: _____ Date: _____

Course Length (hours): _____

Stormwater Training Topic: *(check as appropriate)*

- ❑ Erosion Control BMPs
- ❑ Emergency Procedures
- ❑ Sediment Control BMPs
- ❑ Good Housekeeping BMPs
- ❑ Non-Stormwater BMPs

Specific Training Objective:_____

_____

Attendee Roster: *(attach additional pages as necessary)*

No.	Name of Attendee	Company
1		
2		
3		
4		
5		
6		
7		
8		
9		
10		

Appendix K –Delegation of Authority Form

Delegation of Authority

I, _____ (name), hereby designate the person or specifically described position below to be a duly authorized representative for the purpose of overseeing compliance with environmental requirements, including the Construction General Permit, at the _____ construction site. The designee is authorized to sign any reports, stormwater pollution prevention plans and all other documents required by the permit.

_____ (name of person or position)
_____ (company)
_____ (address)
_____ (city, state, zip)
_____ (phone)

By signing this authorization, I confirm that I meet the requirements to make such a designation as set forth in _____ (Reference State Permit), and that the designee above meets the definition of a "duly authorized representative" as set forth in _____ (Reference State Permit).

I certify under penalty of law that this document and all attachments were prepared under my direction or supervision in accordance with a system designed to assure that qualified personnel properly gathered and evaluated the information submitted. Based on my inquiry of the person or persons who manage the system, or those persons directly responsible for gathering the information, the information submitted is, to the best of my knowledge and belief, true, accurate, and complete. I am aware that there are significant penalties for submitting false information, including the possibility of fine and imprisonment for knowing violations.

Name: _____

Company: _____

Title: _____

Signature: _____

Date: _____

CHAPTER 10

DRINKING WATER SOURCE PROTECTION

(Updated 6-20-11)

ORDINANCE 2010-15

AN ORDINANCE FOR THE PROTECTION OF DRINKING WATER SOURCES IN THE CITY OF SOUTH JORDAN

WHEREAS, the City of South Jordan provides water to its residents acting as a water retailer: and

WHEREAS, the City of South Jordan currently purchases 100% of the drinking water for South Jordan Residents from Jordan Valley Water Conservancy District; and

WHEREAS, Jordan Valley Water Conservancy District obtains water from groundwater wells within South Jordan; and

WHEREAS, UCA § 19-4-113 requires that Salt Lake County adopt a water source protection ordinance which applies to all municipalities within the Count; and

WHEREAS; UCA § 19-4-113 allows a city within a county that has adopted a water source protection ordinance to adopt its own water source protection ordinance that supersedes the County ordinance within a cities limits; and

WHEREAS; the South Jordan City Council finds it in the best interest of the health safety and welfare of South Jordan residents to adopt a water source protection ordinance specific to South Jordan.

NOW, THEREFORE, BE IT ORDAINED BY THE CITY COUNCIL OF SOUTH JORDAN CITY, UTAH AS FOLLOWS:

SECTION 1. Enactment. Chapter 16.50, Drinking Water Source Protection, of the South Jordan City Code is hereby enacted as follows:

Chapter 16.50
DRINKING WATER SOURCE PROTECTION

16.50.010: SHORT TITLE:

A. This Title and the drinking water source protection map shall be known and may be cited as the *SOUTH JORDAN CITY DRINKING WATER SOURCE PROTECTION ORDINANCE.* The chapters and sections of this Title may be cited as chapters and sections of this Ordinance.

16.50.020: PURPOSE:

The purpose of this Chapter is:

A. To comply with Utah Code Ann., §19-4-113 requiring counties to adopt a water source protection ordinance to protect groundwater sources of public drinking water.

B. To protect, preserve, and maintain existing and potential public drinking water sources to safeguard the health, safety and welfare of City residents and visitors.

C. To establish and designate drinking water source protection zones and ground water recharge areas for all sources of public drinking water within City boundaries.

D. To regulate land use within identified areas where ground water is or could be affected by the use. This shall be accomplished by the designation and regulation of property uses and conditions within such zones or areas.

E. A notice to cease or an exemption issued under this Chapter shall not relieve the owner of the obligation to comply with any other applicable federal, state, regional or local regulations, rules, ordinances or requirements, nor shall said notice or exemption relieve any owner of any liability for violation of such regulations, rules, ordinances or requirements.

F. This Ordinance presents an adequate degree of protection for regulatory purposes; however, it does not ensure that drinking water sources will not be subject to accidental or intentional contamination. This Ordinance shall not create liability on the part of the City, or its officers or employees, for any damages to the public water supplies from reliance on this Chapter, nor any administrative order made there under.

16.50.030: APPLICABILITY:

A. It shall be the responsibility of any person owning real property and/or owning or operating a business within the jurisdiction of the City to conform and comply with this Chapter. Ignorance of this provision shall not excuse any violations of the provisions of this Chapter. This Chapter is not intended to repeal, abrogate or impair any existing easements, covenants or deed restrictions. However, where this Chapter and another ordinance, easement, covenant or deed restriction conflict or overlap, whichever imposes the more stringent restrictions shall prevail.

B. The provisions of this Chapter shall be considered minimum requirements, liberally construed in favor of the City and water protection, and deemed neither to limit nor repeal any other powers granted under state law.

C. Unless otherwise specified, this Chapter applies to handling, movement and storage of potentially hazardous materials, and any development, development activity, land use or development project authorized by this title, including, but not limited to, subdivisions, site plans and building permits.

D. This Chapter applies to all developments within the City in the drinking water source protection zones. No structure or land shall hereafter be constructed, located, extended or altered without full compliance with this Chapter and other applicable regulations.

16.50.040: DEFINITIONS:

The following words, terms and phrases, when used in this chapter, shall have the meanings ascribed to them in this section, except where the context clearly indicates a different meaning:

APPLICANT: Any person who submits an application for a permit pursuant to the drinking water source protection ordinance.

ALLOWED USES: A use, activity or practice allowed by this ordinance which does not create a risk of pollution or contamination in the specified protection zone of such significance so as to require the implementation of regulatory requirements, best management practices or engineered controls.

ANIMAL FEEDING OPERATIONS: Real property containing facilities where animals have been or will be stabled or confined and feed or maintained for a total of 45 days or more in any 12 month period.

BEST MANAGEMENT PRACTICE (BMP): Practices, procedures or designs used as a standard for a given industry. In this specific case, these practices are for the erosion control industry's best management practices (BMPs) for controlling nonpoint sources of pollution and are the methods, measures, practices, or a combination of practices determined to be the most effective and practicable means (including technological, economic, and institutional considerations) to control nonpoint pollutants at levels compatible with environmental quality goals. As used in the document, BMPs are synonymous with erosion and sediment control measures.

COLLECTION AREA: The area surrounding a ground water source that is underlain by collection pipes, tile, tunnels, infiltration boxes, or other ground water collection devices.

DESIGN STANDARD: the established state or national standards for the design, construction, placement, or maintenance of a potential contamination source to prevent discharges to groundwater.

DISCHARGE: To cause a substance to enter the drinking water source by any means, whether directly or indirectly. It includes, but is not limited to, spilling, leaking, seeping, pouring, injecting, emitting, emptying, disposing, releasing, or dumping regulated substances to the soils, air, ground waters or surface waters of the City. "Discharge" does not include the use of a regulated substance in accordance with the appropriate use intended or specified by the manufacturer of the substances; provided that such use is not prohibited by federal, state or local regulations. "Discharge" shall not include discharges specifically authorized by federal or state permits.

DRINKING WATER SOURCE PROTECTION ZONE: An area within which certain practices are mandated to protect ground water flowing to public drinking water wells.

DRINKING WATER SUPPLY WELL: A drinking water well to supply water which has been permitted or intended for consumptive use.

GROUNDWATER: Any water that may be drawn from the ground.

GROUNDWATER SOURCE: Any well, spring, tunnel, adit or other underground opening from or through which ground water flows or is pumped from subsurface water bearing formations.

GROUND WATER DIVIDE: A line on a water table on each side of which the water table slopes downward in a direction away from the line.

GROUND WATER TOT: Time of travel for groundwater.

HANDLE: To use, generate, process, produce, package, treat, store or transport a regulated substance in any fashion.

PCS: Potential contaminant source.

PWS: Public water system. System, publicly or privately owned, providing water for human consumption and other domestic uses. It includes collection, treatment, storage or distribution facilities under the control of the operator.

PERSON: An individual, firm, partnership, corporation, association, joint venture, governmental entity or other legal entity, and shall include the plural as well as singular.

PETROLEUM PRODUCT: Shall include fuels (gasoline, diesel fuel, kerosene, and mixtures of these products including MTBE), lubricating oils, motor oils (new and used), hydraulic fluids, and other similar petroleum based products.

PROTECTION ZONE: The delineation zones of the drinking water source protection zone.

POLLUTION SOURCE: any point source discharges of contaminants to ground or surface water or potential discharges of the liquid forms of "extremely hazardous substances" which are store in containers in excess of "applicable threshold planning quantities as specified in SARA Title III, which include but are not limited to storage facilities that store the liquid forms of extremely hazardous substances, septic tanks, drain fields, class V underground injection wells, landfills, open dumps, land filling of sludge and seepage, manure piles, salt piles, drain lines and animal feeding operations with more than ten animal units.

REGULATED SUBSTANCES: Substances (including degradation and interaction products) which because of quantity, concentration, physical, chemical (including ignitability, corrosivity, reactiveness and toxicity), infectious characteristics, radiomutagenicity, carcinogenicity,

teratogenicity, bioaccumulative effect, persistence (nondegradability) in nature, or any other characteristics relevant to a particular material that may cause significant harm to human health and/or environment (including surface and ground water, plants and animals).

SLVHD: Salt Lake Valley Health Department.

SOURCE PROTECTION ZONE or ZONES OF INFLUENCE: Specified surface and subsurface are surrounding a groundwater source supplying a public water system, through which contaminants are reasonably likely to reach the groundwater source.

TIME OF TRAVEL (TOT): Time required for a particle of water to move in the producing aquifer from a specific point to a ground water source or drinking water, or the time required for a particle of water to travel from a specific point along a surface water body to an intake.

TRAVEL TIME CONTOUR: The locus of points that form a line of any configuration in space from which ground water particles on that line theoretically take an equal amount of time to reach a given destination, such as a well or a well field, as predicted by the Refined Salt Lake Valley MODFLOW/MODPATH Model, copyrighted.

UAC: The Utah Administrative Code.

USGS: The United States Geological Survey.

WELL: Any excavation that is drilled, cored, bored, washed, driven, dug, jetted, or otherwise constructed when the intended use of such excavation is for the location, acquisition, development or artificial recharge of ground water.

WELLFIELD: An area of land that contains one or more drinking water supply wells.

16. 50.050: ESTABLISHMENT OF DRINKING WATER SOURCE PROTECTION ZONES:

The drinking water source protection zones are restrictive designations applied to regulate specified land uses and conditions in zones designated for the protection of groundwater sources of drinking water in addition to any other zone in this title. The drinking water source protection zones shall consist of the areas designated on the drinking water source protection map.

16.50.060: DESIGNATION OF RECHARGE AREAS AND PROTECTION ZONES:

A. The drinking water source protection zones or zones of influence are identified and described as follows:

1. Protection Zone 1. The area within 100-foot radius from the well or margin of the collection area.

2. Protection Zone 2. The area within the 250 day groundwater TOT zone of influence to the wellhead which supplies water to the groundwater source as specified on the drinking water source protection map as part of this ordinance.

3. Protection Zone 3. The area within the 3 year groundwater TOT zone of influence to the wellhead which supplies water to the groundwater source as specified on the drinking water source protection map as part of this ordinance

4. Protection Zone 4. The area within the 15 year groundwater TOT zone of influence to the wellhead which supplies water to the groundwater source as specified on the drinking water source protection map as part of this ordinance

B. The following rules shall apply to the properties and facilities within the protection zones depicted on the drinking water source protection map:

1. The property located wholly or partially in a protection zone on the drinking water source protection map shall be governed by the restrictions applicable to that protection zone; and

2. Properties located within more than one protection zone as shown on the drinking water source protection map shall be governed by the restrictions applicable to the most restrictive protection zone.

16.50.070: REVIEW OF THE DRINKING WATER SOURCE PROTECTION MAP:

The drinking water source protection map shall be reviewed as deemed necessary by the City with support from other agencies. The basis for updating the map may include, but is not limited to, the following:

A. Changes in technical or scientific knowledge in the areas of geohydrology, hydraulics and geology.

B. Changes in well field configuration.

C. Changes in pumping rates for the well field.

D. Development of new wells, well fields and/or springs.

E. Changes in water quality.

16.50.080: DRINKING WATER SOURCE PROTECTION MAP

The City of South Jordan has incorporated the information compiled by Jordan Valley Water Conservancy District on a City map known as the "Drinking water source protection map" identifying each groundwater source for drinking water, and the source protection zone for each source within the City. A copy of the drinking water source protection map is attached as Appendix A and is incorporated herein by reference.

16.50.090: REVIEW OF DEVELOPMENT PLANS:

A. Prior to submitting the development plans and permits, the developer engineer shall review the restricted and prohibited uses established in Appendix B of this ordinance. If the development plan lie within the water protection zones and any of the land uses listed in the matrix applies to the development, the engineer shall state it on the plans and proceed with the development plan process as required by the City.

B. All development plans and permits that lie within the protection zones and which land use is identified in the matrix of Appendix B of this ordinance shall be reviewed by a geologist or hydrogeologist who has demonstrated expertise in the assessment of recharge rates at the developer's expense. The developer's engineer must submit their findings and best management and construction controls to be implemented during the land use period (construction or land use) to the City. The developer and his/her engineer shall be aware of the restricted and prohibited uses established in Appendix B of this ordinance. Any development that will result in a loss of the beneficial use of groundwater or that may have an adverse or negative effect upon local ground water quality shall be rejected. Plans that are rejected may be revised by the developer and his/her engineer and resubmitted to the City for subsequent review.

C. Developments that do not lie within the protection zones may proceed with the development plan processing requirements of the City.

THE CITY WILL REVIEW PLANS AND PERMITS BEFORE THE APPROVAL OF CONSTRUCTION IS GRANTED. No permits or land use approvals including, but not limited to, a subdivision approval, conditional or permitted use approval, business license or building permit shall be issued pending the resolution of this ordinance.

16.50.100: ALLOWED, RESTRICTED AND PROHIBITED USES:

A. Allowed Uses: "Allowed Uses" are the same as those established before the effective date of this ordinance provided that such use is not in violation of any other ordinance, health regulation nor determined by a court of competent jurisdiction to be a nuisance under the provisions of federal, state and local laws or health regulations. All new land uses, change of uses, or expansion of uses shall comply with this ordinance.

B. Restricted Uses: "Restricted Uses" (R) are uses associated with a "Potential Contamination Source." A Restricted Use may be permitted only after review and recommendations are received from the affected public water system and the Salt Lake Valley Health Department.

C. Prohibited Uses: "Prohibited Uses" (X) are identified as neither "permitted" nor "conditional" shall not be allowed in the zone. Notwithstanding the provisions of this Chapter, the use and storage of regulated substances in amounts meeting or exceeding the

"reportable quantity" shall be prohibited as unless an exemption is granted as set forth therein.

16.50. 110: POLICIES:

A. Permit review should occur prior to the connection and subsequent supplying of water to the new business

B. Approval of water service to a business will become subject to a review of their process and activity in its relation to the DWSP Program.

C. When applicable, the City should work with the other PWSs to recognize other PWSs defined drinking water source protection zones and require that the PCS implement design or operating standards that prevent discharges to groundwater.

SECTION 2. Severability. If any section, part or provision of this Ordinance is held invalid or unenforceable, such invalidity or unenforceability shall not affect any other portion of this Ordinance and all sections, parts, provisions and words of this Ordinance shall be severable.

SECTION 3. Effective Date. This Ordinance shall become effective immediately upon publication or posting as required by law.

PASSED AND ADOPTED BY THE CITY COUNCIL OF SOUTH JORDAN CITY, STATE OF UTAH, ON THIS ~~15th~~ 20th DAY OF ~~JUNE~~ July, 2010 BY THE FOLLOWING VOTE:

	YES	NO	ABSTAIN	ABSENT
Brian C. Butters	X			
Kathie L. Johnson	X			
Larry Short	X			
Aleta A. Taylor	X			
Leona Winger	X			

City of South Jordan CORPORATE Seal State of Utah

W. Kent Money, Mayor

ATTEST: Anna M. West
Anna M. West, City Recorder

Approved as to content: John H. Stephens
City Manager

Approved as to form:

Assistant City Attorney

Legal Review: _____
City Attorney

Mayor: _____
W. Kent Money

ATTEST: _____
City Recorder

Well Location
250 Day Zone of Influence
3 Year Zone of Influence
15 Year Zone of Influence
South Jordan City Boundary

Jordan Valley Water Conservancy District
Zones of Influence for JVWCD Wells
in the South Jordan Area with Current Zoning

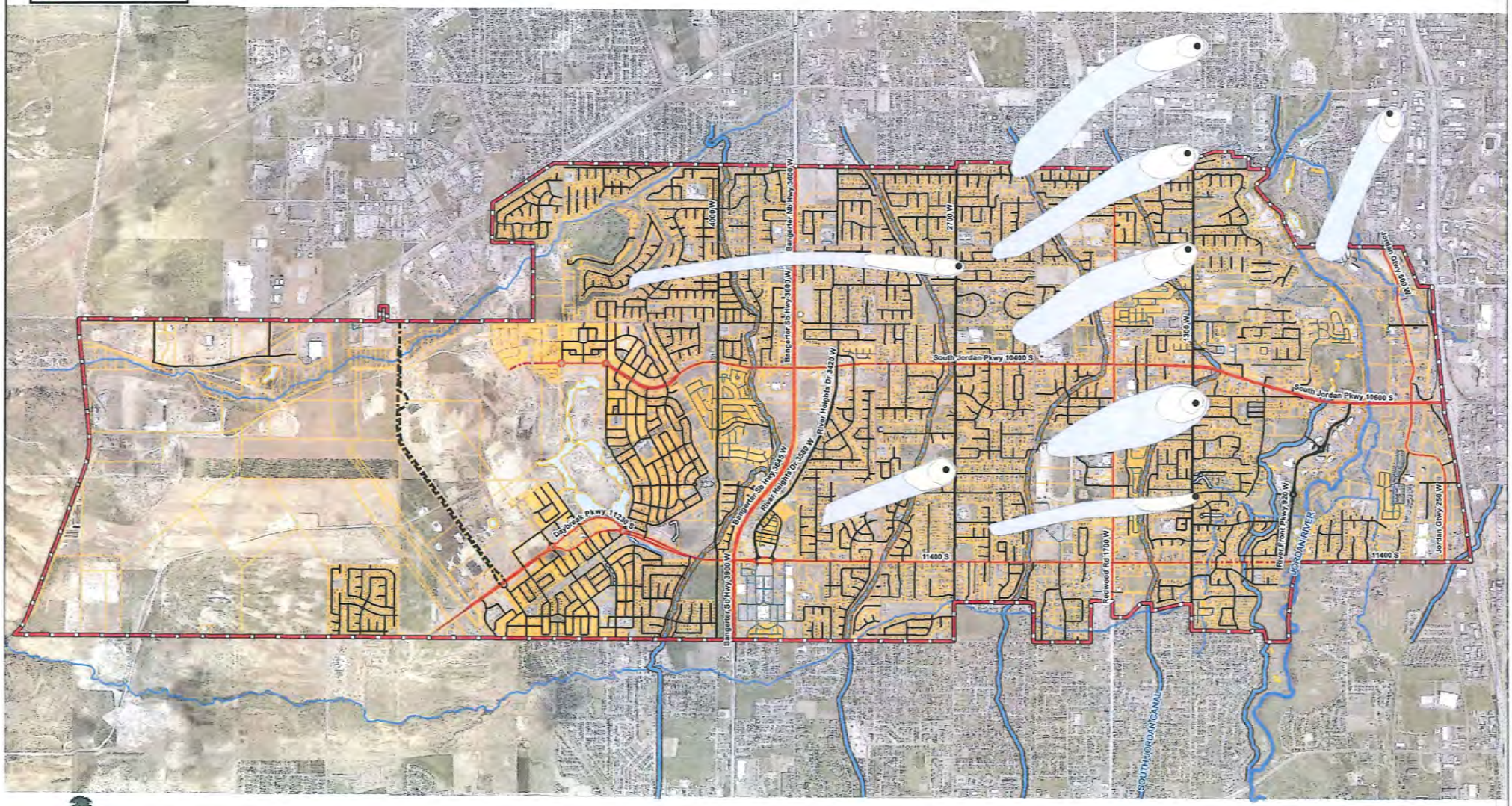

0 0.5 1 2 3 4 Miles

SOUTH JORDAN

Chapter 16.50 APPENDIX B.

RESTRICTED AND PROHIBITED USES IN WATER SOURCE PROTECTION ZONES

Legend:			
	R	=	Restricted use
	X	=	Prohibited use

Use		Zone 1	Zone 2	Zones 3 And 4
Agricultural pesticide, herbicide and fertilizer storage, use, filling and mixing areas		X	R	R
Agriculture experimental station		X	R	R
Airport maintenance and fueling sites		X	R	R
Animal byproduct; offal or dead animal reduction or dumping		X	X	R
Apiary (Bee yard)		X	R	R
Animal breeding, adoption, or training establishment i.e. dog kennel, pound, or school, etc		X	R	R
Appliance repair		X	R	R
Auto operations and fleet vehicle maintenance facilities (commercial):				
	Auto body	X	R	R
	Dealership maintenance departments	X	R	R
	Engine repair	X	R	R
	Oil and lube shops	X	R	R
	Rust proofing	X	R	R
	Tire	X	R	R
	Vehicle rental with maintenance	R	R	R

Aviary		X	R	R
Baby diaper service		X	R	R
Beauty salons and barber shops		X	R	R
Boat building and refinishing		X	R	R
Breweries		X	R	R
Car washes		X	R	R
Carpet, rug, and upholstery cleaning or dyeing		X	X	R
Cemeteries, golf courses, parks and plant nurseries		X	R	R
Chemical reclamation facilities		X	X	R
Chemigation wells		X	X	R
Commercial and private recreation		X	R	R
Concrete, asphalt and tar use, storage, or processing companies		X	R	R
Dairy farms and animal feed lots (more than 10 animal units)		X	X	R
Dry cleaners (with on site chemicals)		X	X	R
Dry cleaners (without on site chemicals)		X	R	R
Embalming services		X	R	R
Equipment storage or rental yards		X	R	R
Farm operations:				
	Dump sites	X	R	R
	Maintenance garages	X	R	R
	Manure piles (<500 cu. ft.)	R	R	R
Fat rendering processes		X	X	R
Feed, cereal or flour mill		X	R	R
Fertilizer and soil conditioner manufacture, processing and/or sales		X	X	R
Firearms and/or archery range; gun club		X	R	R

Food processing, meatpacking and slaughterhouses	X	X	R
Fuel, oil and heating oil distribution and storage facilities	X	R	R
Fur farm	X	R	R
Furniture stripping, painting and finishing business	X	R	R
Gasoline service stations (including underground storage tanks)	X	R	R
Golf courses	X	X	R
Green house or nursery	X	R	R
Hospitals and medical, dental and veterinary offices	X	R	R
Industrial manufacturers of: chemicals, pesticides, herbicides, paper products, leather products, textiles, rubber, plastic, fiberglass, silicone, glass, pharmaceuticals and electrical equipment, etc.	X	R	R
Industrial waste disposal/ impoundment areas	X	X	R
Improperly abandon wells	X	X	X
Incinerator	X	X	R
Junk and salvage yards	X	R	R
Laboratories which may include scientific research, investigation, testing or experimentation including prototype product development or incidental pilot plants	X	R	R
Landfills and transfer stations	X	R	R
Laundromats	X	R	R
Machine shops, metal plating, heat treating, smelting, annealing and descaling facilities	X	R	R
Mining operations:			
Radiological	X	R	R
Sand and gravel excavation and processing	R	R	R
Municipal wastewater treatment plants	X	X	R
Photo processing and print shops	X	R	R

RV waste disposal stations	X	R	R
Railroad yards	X	R	R
Residential pesticide, herbicide and fertilizer storage, use, filling and mixing areas	X	R	R
Residential underground storage tanks	X	R	R
Salt and salt-sand piles	X	R	R
Septic tank drain field systems	X	R	R
Stormwater detention basin and snow storage sites	X	R	R
Toxic chemical storage and oil pipelines	X	X	X
Wood preservative treatment facilities	X	R	R

STANDARD DRAWINGS

DRAWING INDEX

WATER

3005 STANDARD SYMBOLS
3010 TRENCH CROSS SECTION TERMINOLOGY & STANDARD SIZES
3040 VALVE BOX INSTALLATION
3045 MECHANICAL JOINT TAPPING SLEEVE
3050 LOCATION OF FIRE HYDRANTS
3055 FIRE HYDRANT INSTALLATION WITH MAIN IN THE ROADWAY
3056 FIRE HYDRANT INSTALLATION WITH MAIN OUTSIDE THE ROADWAY
3060 WASHOUT VALVE ASSEMBLY
3065 WATER METER LOCATION
3070 COMBINATION AIR VACUUM VALVE ASSEMBLY
3075 AIR VENT DETAIL
3080 DIRECT BEARING THRUST BLOCKS
3085 TIE DOWN THRUST RETRAINTS
3090 ¾” and 1” METER SERVICE
3091 1 ½” and 2” METER SERVICE
3092 METER SERVICE
3095 ¾” - 2” WATER METER PLAN SERVICE INSTALLATION
3100 3” – 8” WATER VAULT DETAIL
3110 SAMPLING TAP FOR RESIDENTIAL SUBDIVISIONS
2001 BACKFLOW PREVENTION DEVICE IRRIGATION CONNECTION
------- WATER MANHOLE COVER
------- CONDUIT TERMINATION UNDER EQUIPMENT
1 of 3 PRV VAULT DETAILS
2 of 3 PRV VAULT DETAILS
3 of 3 PRV VAULT DETAILS
------- RTU PEDESTAL ELEVATION

IRRIGATION

IRR-01 LINE DRAWING TRANSFORMER ENCLOSURE
IRR-02 STRONG BOX COMBO METER ENCLOSURE
IRR-03 LINE DRAWING TRANSFORMER ENCLOSURE
IRR-04 PEDESTAL MOUNT CONTROLLER
IRR-05 SLEEVING
IRR-06 STOP & WASTE VALVE
IRR-07 BACKFLOW RPA
IRR-08 BACKFLOW COVER
IRR-09 PIPE & WIRE TRENCH
IRR-10 THRUST BLOCKING
IRR-11 LARGE GATE VALVE
IRR-12 MANUAL DRAIN
IRR-13 CONTROL VALVE MANIFOLD SCH-80
IRR-14 CONTROL VALVE MANIFOLD HARCO
IRR-15 QUICK COUPLER VALVE
IRR-16 REMOTE CONTROL VALVE
IRR-17 4 INCH POP-UP SPRAY HEAD
IRR-18 6 INCH POP-UP SPRAY HEAD
IRR-19 12 INCH POP-UP SPRAY HEAD
IRR-20 SMALL ROTOR HEAD
IRR-21 MEDIUM ROTOR HEAD
IRR-22 MEDIUM ROTOR SHRUB RISER
IRR-23 SPORTS TURF HEAD
IRR-24 TREE WATERING SYSTEM
IRR-25 IN LINE DRIP GRID LAYOUT
IRR-26 DRIP SUB SURFACE TURF

IRR-27 DRIP ON SLOPE
IRR-28 DRIP POINT SOURCE EMITTER
IRR-29 DRIP PVC TO PE CONNECTION

SECONDARY

2001 BACKFLOW PREVENTION DEVICE IRRIGATION CONNECTION
2002 SECONDARY WATER LATERAL LAYOUT
2005 VALVE BOX INSTALLATION
2006 DIRECT BEARING THRUST BLOCKS TIE DOWN RESTRAINTS
2007 TIE DOWN THRUST RESTRAINTS
2008 WASHOUT VALVE ASSEMBLY
2010 SECONDARY WATER AIR VACUUM RELEASE VALVE
2011 SECONDARY RESIDENTIAL INSTALLATION
2012 SECONDARY WATER SERVICE CONNECTION
2014 PRESSURE IRRIGATION CANAL GATE AND WEIR BOX
2015 PRESSURE IRRIGATION CANAL GATE AND WEIR BOX
2016 DRAIN VALVE DETAIL
2017 COVER COLLAR
2020 IRRIGATION SLIDE GATE DETAIL
2021 HEADWALL DETAIL
2022 HEADWALL DETAIL
2023 SILT TRAP BOX DETAIL
2024 SECONDARY WATER METER BOX

STORM DRAIN

SD-1 MANHOLE COVERS
SD-2 MANHOLE COVERS 2
SD-3 STORM DRAIN MARKERS
SD-4 STORM DRAIN MARKER ANCHORS
4010 DRY WELL
4015 RIPRAP APRON

STREETS

3010 TRENCH CROSS SECTION TERMINOLOGY & STANDARD SIZES
3012 ROAD WIDENING
S-1 ROAD WIDTHS AND BORDER AREAS
S-2 SINGLE FAMILY REAR AND SIDE PARK STRIPS ON COLLECTOR STREETS
S-3 SIGN POSTS
SN 10B SLIP BASE SIGN BASE (B3) INSTALLATION
DT-01 CURB EXTENSION
3020 SIGNAGE FOR GABRAGE ROUTES
SHUR-FLEX DRIVEABLE DELINEATOR
SHUR-FLEX SURFACE MOUNT BASE

STREETLIGHT

SL-1 STANDARD UTILITY TRENCH
SL-2 ELECTRICAL BOX LID
SL-3 STEELIGHT PEDESTALS
TSG 007077 CATEGORY 1a STREETLIGHT
TSG 002636 CATEGORY 1b STREETLIGHT
TSG 003175 CATEGORY 2 STREETLIGHT
TSG 007220 CATEGORY 3 STREETLIGHT
TSG 003314 CATEGORY 4 STREETLIGHT
SP-6224-GLV CABLE RETAINER ASSEMBLY FOR 4” FOUNDATIN ANCHOR
SP-6200-GLV CABLE RETAINER ASSEMBLY FOR 6” FOUNDATIN ANCHOR
SP-6205-GLV CABLE RETAINER ASSEMBLY FOR 8” FOUNDATIN ANCHOR

SP-6358-GLV	TUBE ASSEMBLY FOR 6” CABLE RETAINER
PB-5520	DOOR ASSEMBLY TB1-17 TRANSFORMER BASE
PB-5526	DOOR ASSEMBLY TB1-20 TRANSFORMER BASE

WATER

PROFESSIONAL ENGINEER
BRAD
KLAVANO
No. 173076-2202
12/28/22
STATE OF UTAH

8" W	EXISTING WATER
8" WATER	PROPOSED WATER
	VALVE
	FIRE HYDRANT
	PRESSURE REGULATING VALVE
	REDUCER/ENLARGER
G	GAS LINE
S S	SEWER LINE
T	TELEPHONE LINE
WM	WATER METER
E	ELECTRIC LINE
A/V	AIR AND VACUUM VALVE
B.O.	BLOW-OFF
	END CAP
	PLUG
	THRUST BLOCK

PREPARED BY:_____

SOUTH JORDAN
UTAH

SOUTH JORDAN CITY

DATE	REVISIONS	BY	DRAWN: KS / DATE 1/06	STANDARD SYMBOLS	STANDARD DRAWING 3005

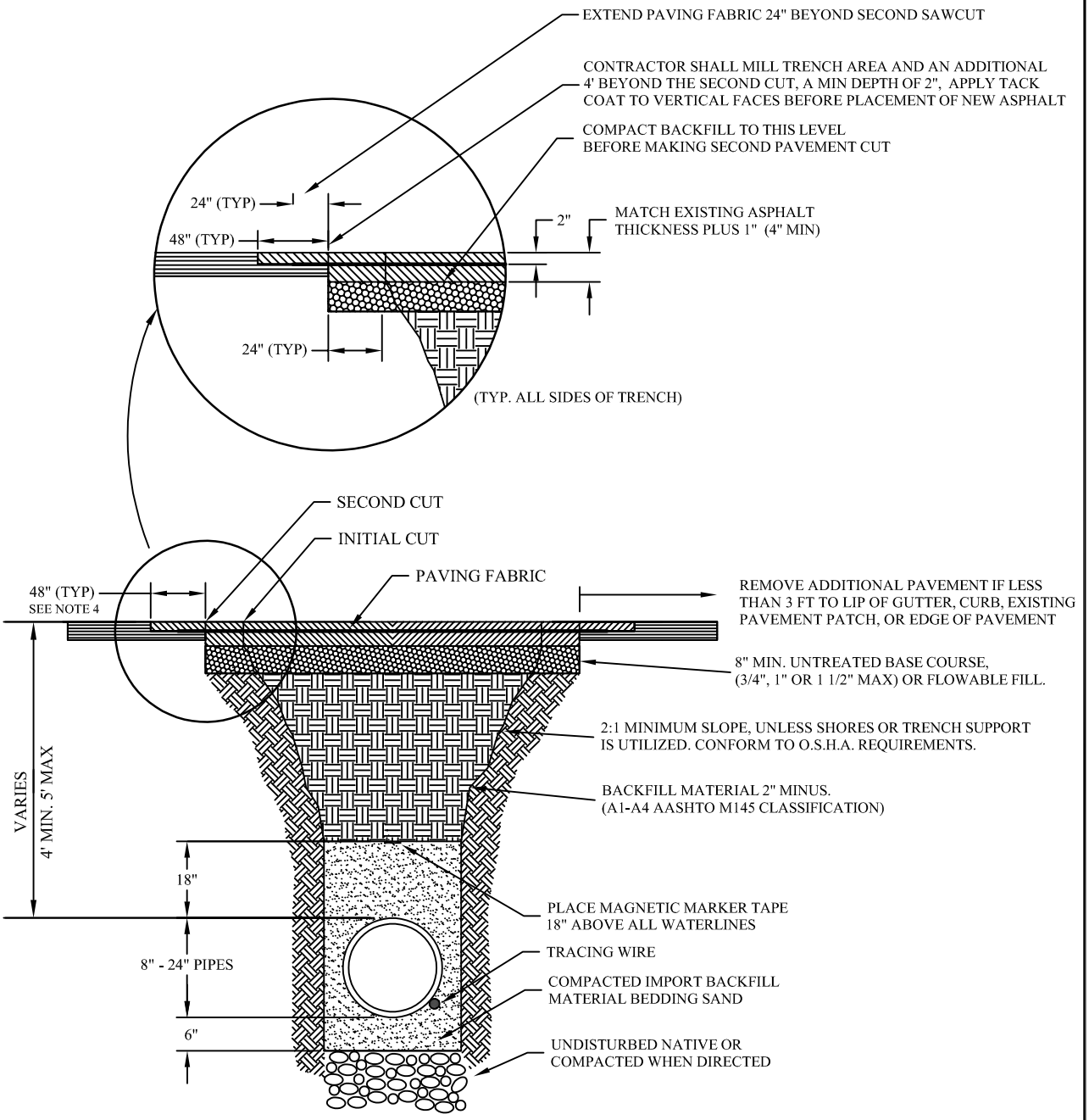

NOTES:
1. NO SAW CUTS TO END UP IN THE WHEEL PATH
2. AFTER THE SECOND CUT, PATCH TRENCH UP TO THE EXISTING ROAD SURFACE THEN MILL THE TRENCH AREA AND AN ADDITIONAL 4 FT BEYOND THE SECOND CUT OR AS DIRECT BY THE CITY ENGINEER ACCORDING TO CITY STANDARDS.
3. PAVING FABRIC PER APWA STANDARD ROADWAY PAVEMENT GEOTEXTILE, NON-WOVEN
4. IF THE OCI RATING OF THE ROAD IS BETWEEN 80 AND 100, THE 48" WILL BE INCREASED TO FULL WIDTH OF ROAD, OR AS DETERMINED BY THE CITY ENGINEER OR DESIGNEE.

PREPARED BY:_____

SOUTH JORDAN UTAH

SOUTH JORDAN CITY

DATE	REVISIONS	BY	DRAWN:	TRENCH CROSS SECTION TERMINOLOGY & STANDARD SIZES	STANDARD DRAWING
04/11		JRF	KS		3010
			DATE 1/06		

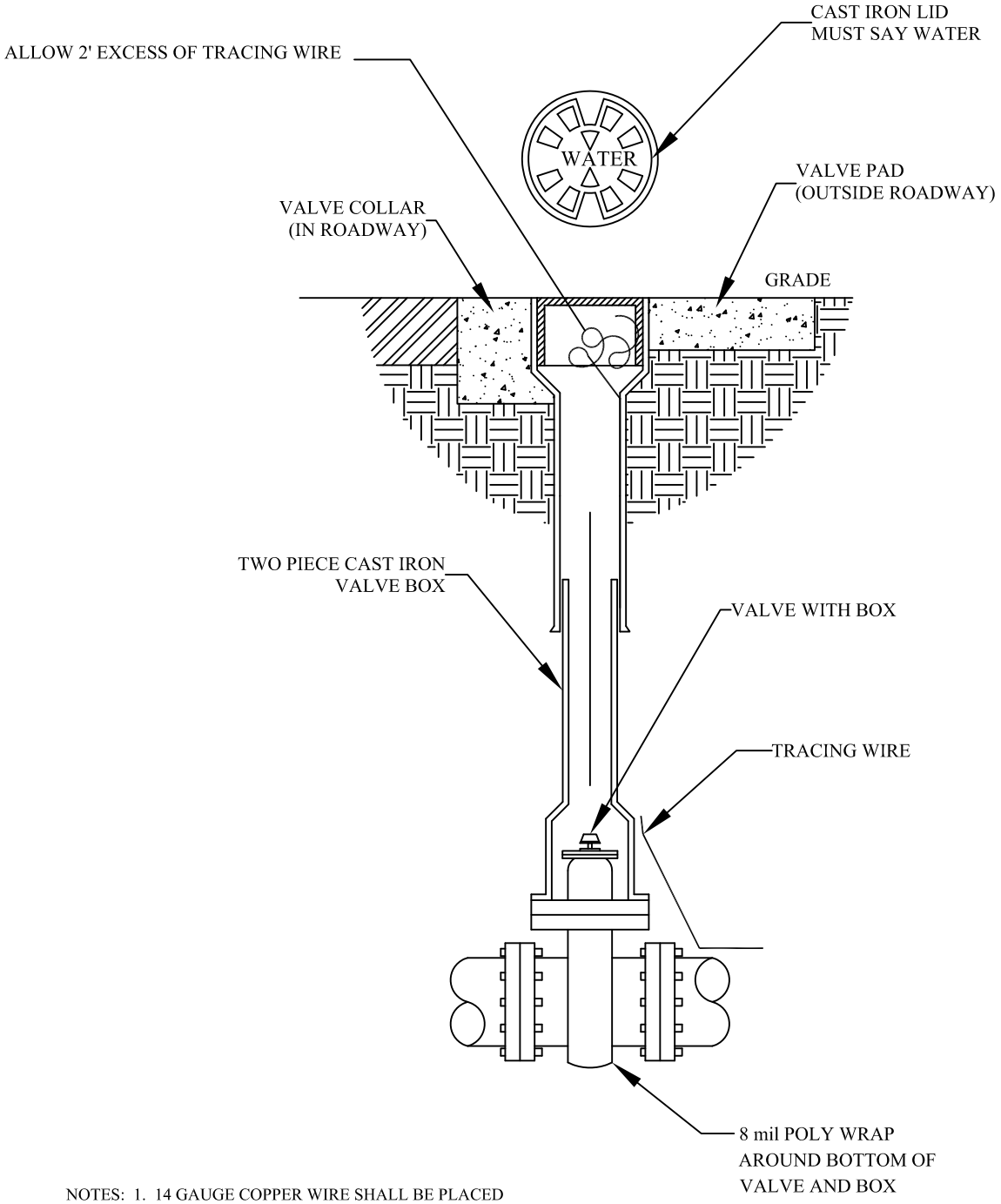

NOTES: 1. 14 GAUGE COPPER WIRE SHALL BE PLACED OUTSIDE OF BOTTOM OF BOX AND INSIDE TOP OF BOX

2. VALVE OPERATING NUTS SHALL BE WITHIN 3' TO THE FINISHED SURFACE. EXTENTIONS STEMS WITH ROCK SHIELDS SHALL BE PROVIDED WHERE DEPTHS EXCEED 4'.

PREPARED BY: _____

SOUTH JORDAN UTAH

SOUTH JORDAN CITY

DATE	REVISIONS	BY	DRAWN: KS	VALVE BOX INSTALLATION	STANDARD DRAWING 3040
			DATE 1/06		

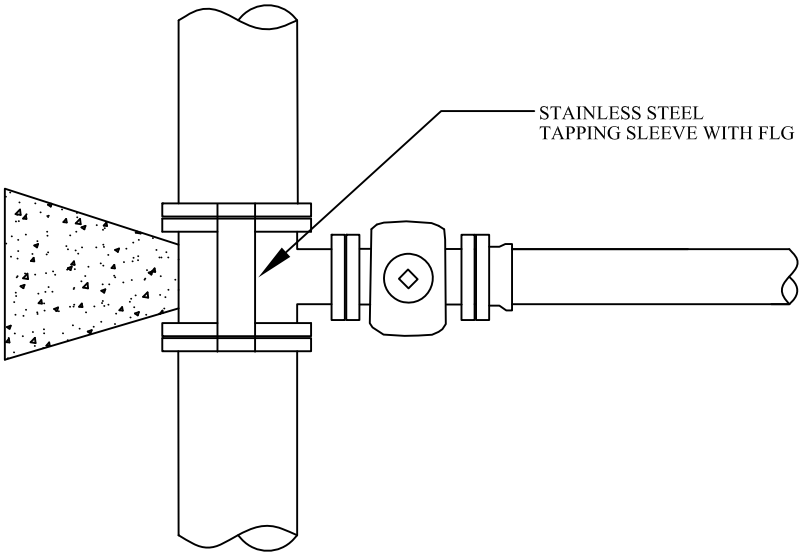

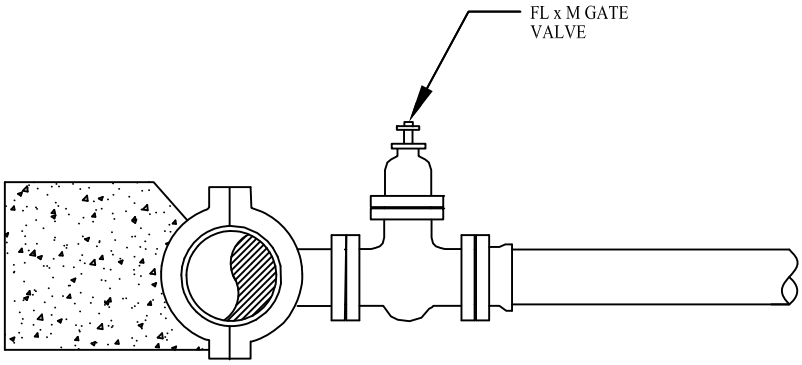

NOTES:

1. REFER TO SECTION 3.3.8 'MAIN LINE VALVES' FOR TAPPING SLEEVE AND VALVE REQUIREMENTS, AND SECTION 3.7.9 'HOT TAPPING' FOR INSTALLATION INSTRUCTIONS
   INTERSECTIONS MAY BE OMITTED.
2. SEE SECTION 3.3.4 'MAIN LINE FITTING' AND SECTION 3.7.11 'INSTALLATION OF VALVES AND FITTINGS' FOR INSTALLATION AND WRAPPING FOR BOLTED CONNECTIONS
   THRUST BLOCK DETAILS.

RECOMMENDED MATERIALS - STAINLESS STEEL TAPPING SLEEVE WITH FLG

MANUFACTURER TO BE AWWA APPROVED.

PREPARED BY:_____

SOUTH JORDAN CITY

DATE	REVISIONS	BY	DRAWN:	MECHANICAL JOINT TAPPING SLEEVE	STANDARD DRAWING 3045
			DATE		

CASE 1

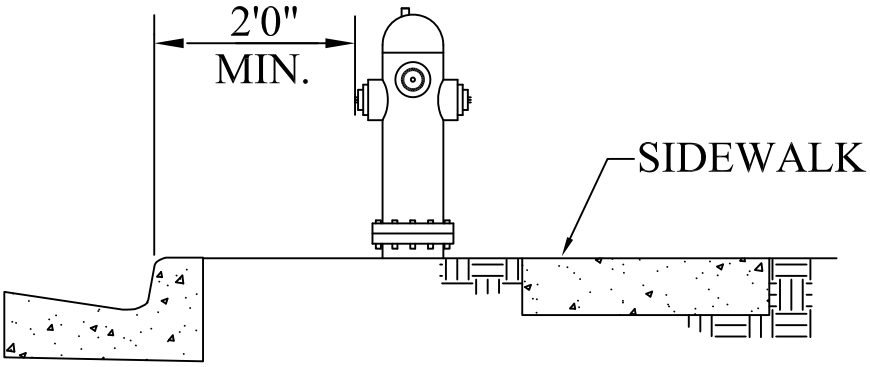

CASE 2

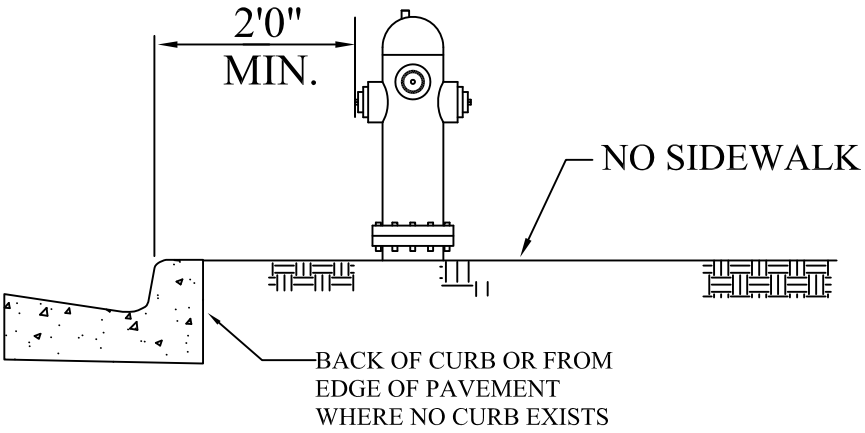

NOTES:

1. ABOVE GROUND UTILITIES SHALL BE LOCATED ON PROPERTY LINES SEPERATING LOTS.

PREPARED BY:_____

SOUTH JORDAN CITY

DATE	REVISIONS	BY	DRAWN: / DATE	LOCATION OF FIRE HYDRANTS	STANDARD DRAWING 3050

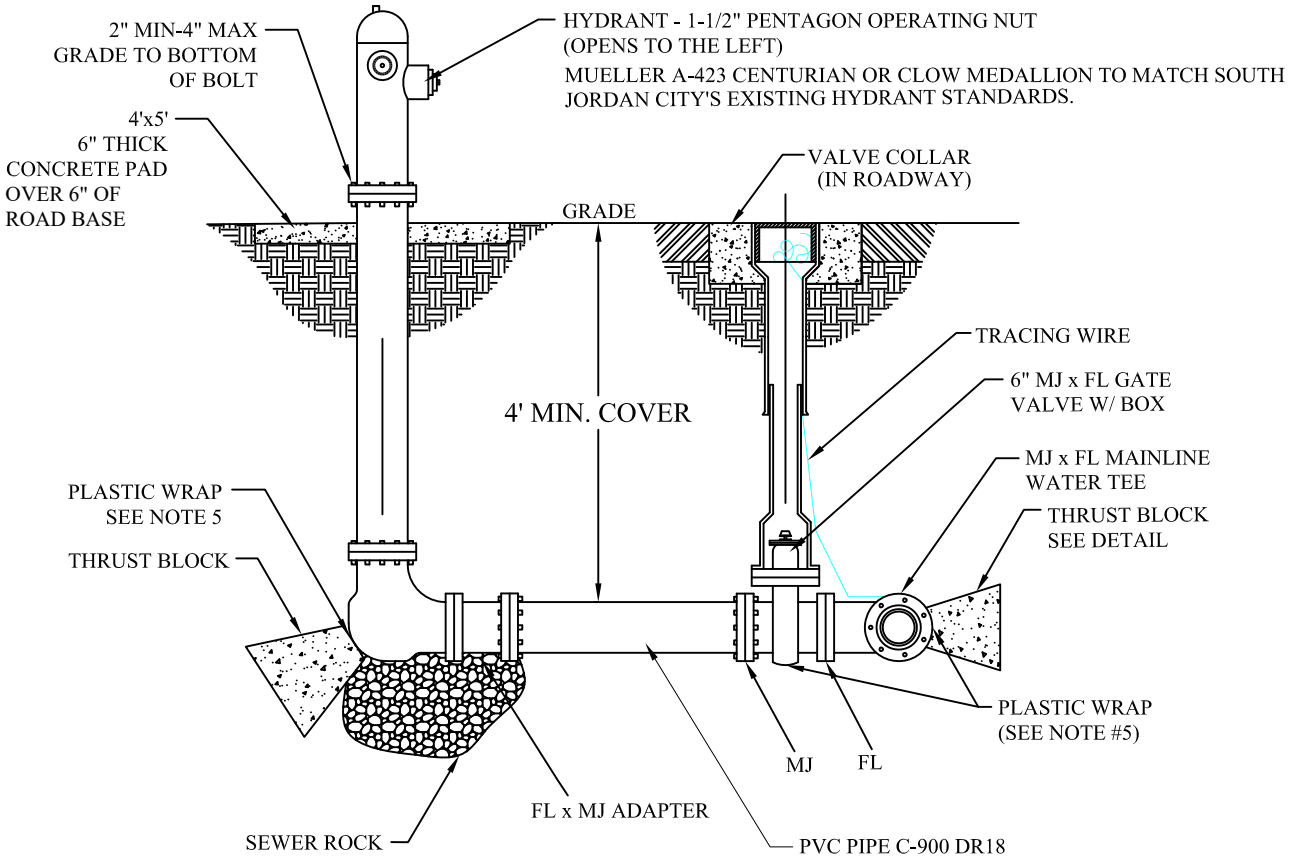

NOTES:

1. INSPECTION: PRIOR TO BACKFILLING, SECURE INSPECTION OF INSTALLATION BY ENGINEER.
2. BACKFILL: INSTALL AND COMPACT ALL BACKFILL MATERIAL PER SPECIFICATIONS.
3. HYDRANT: DRY BARREL PER AWWA C502.
   A. PROVIDE AT LEAST 1 CUBIC YARD OF SEWER ROCK AROUND DRAIN HOLE AT BASE OF HYDRANT. PLACE TAR PAPER OR PLASTIC OVER SEWER ROCK TO PREVENT SILTING.
   B. PAINT FIRE HYDRANT RED PER SOUTH JORDAN CITY'S REQUIREMENTS.
   C. APPLY POLY-FM GREASE TO ALL BURIED METAL SURFACES. WRAP WITH 8 mil THICK POLYETHYLENE SHEET AND TAPE WRAP.
   D. ALL HYDRANTS NOT IN SERVICE SHALL BE BAGGED UNTIL WATER IS AVAILABLE
4. THRUST BLOCKS: REQUIRED FOR ALL CONNECTIONS INCLUDING FLANGED OR WELDED PIPE SYSTEMS.
5. PLASTIC WRAP: PRIOR TO POURING CONCRETE, APPLY POLY-FM GREASE AND WRAP PIPE SYSTEM AND FITTINGS WITH 8 mil THICK PLASTIC SHEET TO PREVENT BONDING OF CONCRETE TO PIPE SYSTEM AND FITTINGS.
6. PLACE FOUR (4) PROTECTIVE BOLLARDS AROUND HYDRANT IF DIRECTED BY BY SOUTH JORDAN CITY.

PREPARED BY: _____

SOUTH JORDAN
UTAH

SOUTH JORDAN CITY

DATE	REVISIONS	BY	DRAWN: / DATE	FIRE HYDRANT INSTALLATION WITH MAIN IN THE ROADWAY	STANDARD DRAWING 3055

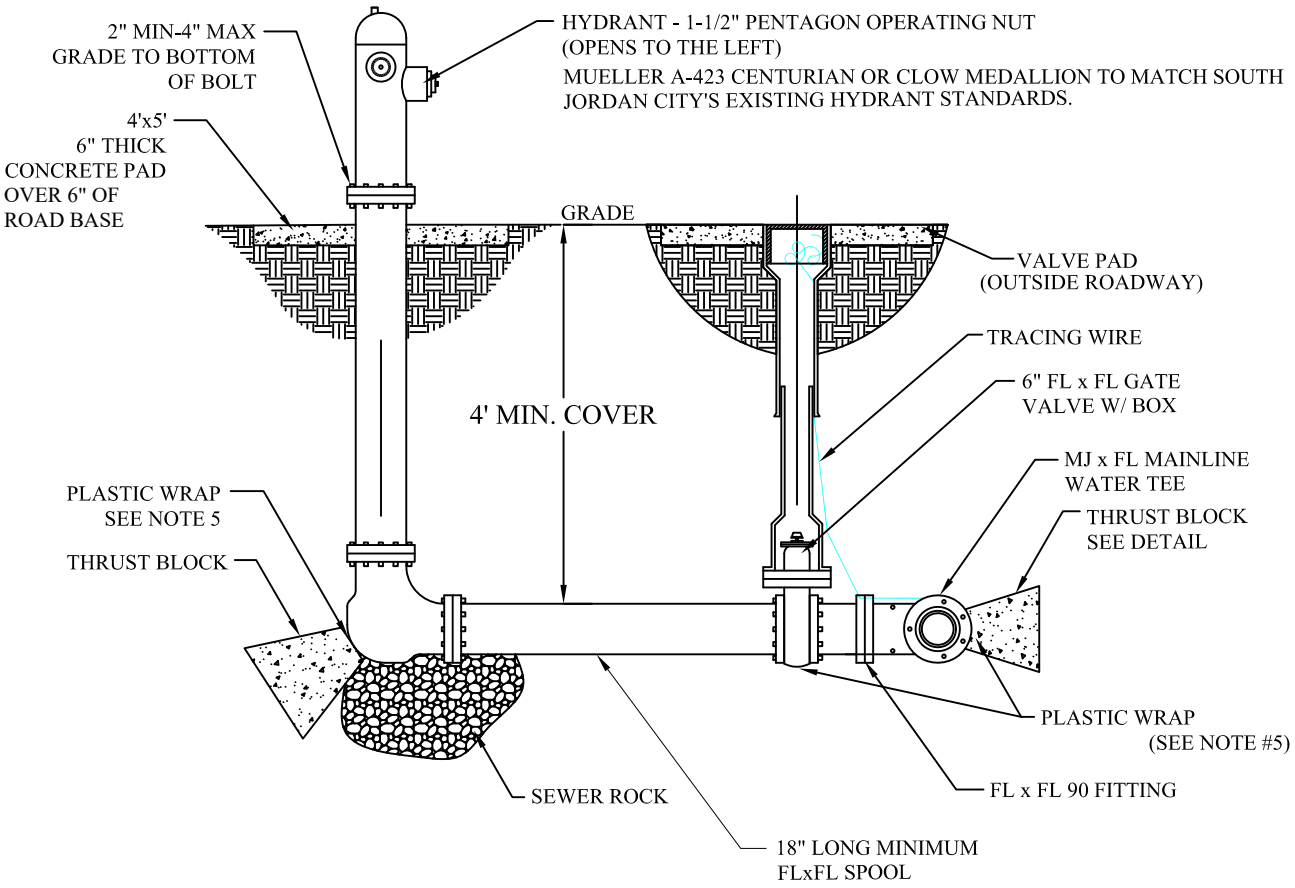

NOTES:

1. INSPECTION: PRIOR TO BACKFILLING, SECURE INSPECTION OF INSTALLATION BY ENGINEER.
2. BACKFILL: INSTALL AND COMPACT ALL BACKFILL MATERIAL PER SPECIFICATIONS.
3. HYDRANT: DRY BARREL PER AWWA C502.
   A. PROVIDE AT LEAST 1 CUBIC YARD OF SEWER ROCK AROUND DRAIN HOLE AT BASE OF HYDRANT. PLACE TAR PAPER OR PLASTIC OVER SEWER ROCK TO PREVENT SILTING.
   B. PAINT FIRE HYDRANT RED PER SOUTH JORDAN CITY'S REQUIREMENTS.
   C. APPLY POLY-FM GREASE TO ALL BURIED METAL SURFACES. WRAP WITH 8 mil THICK POLYETHYLENE SHEET AND TAPE WRAP.
   D. ALL HYDRANTS NOT IN SERVICE SHALL BE BAGGED UNTIL WATER IS AVAILABLE
4. THRUST BLOCKS: REQUIRED FOR ALL CONNECTIONS INCLUDING FLANGED OR WELDED PIPE SYSTEMS.
5. PLASTIC WRAP: PRIOR TO POURING CONCRETE, APPLY POLY-FM GREASE AND WRAP PIPE SYSTEM AND FITTINGS WITH 8 mil THICK PLASTIC SHEET TO PREVENT BONDING OF CONCRETE TO PIPE SYSTEM AND FITTINGS.
6. PLACE FOUR (4) PROTECTIVE BOLLARDS AROUND HYDRANT IF DIRECTED BY BY SOUTH JORDAN CITY.

PREPARED BY:_____

SOUTH JORDAN
U T A H

SOUTH JORDAN CITY

DATE	REVISIONS	BY	DRAWN: / DATE	FIRE HYDRANT INSTALLATION WITH MAIN OUTSIDE THE ROADWAY	STANDARD DRAWING 3056

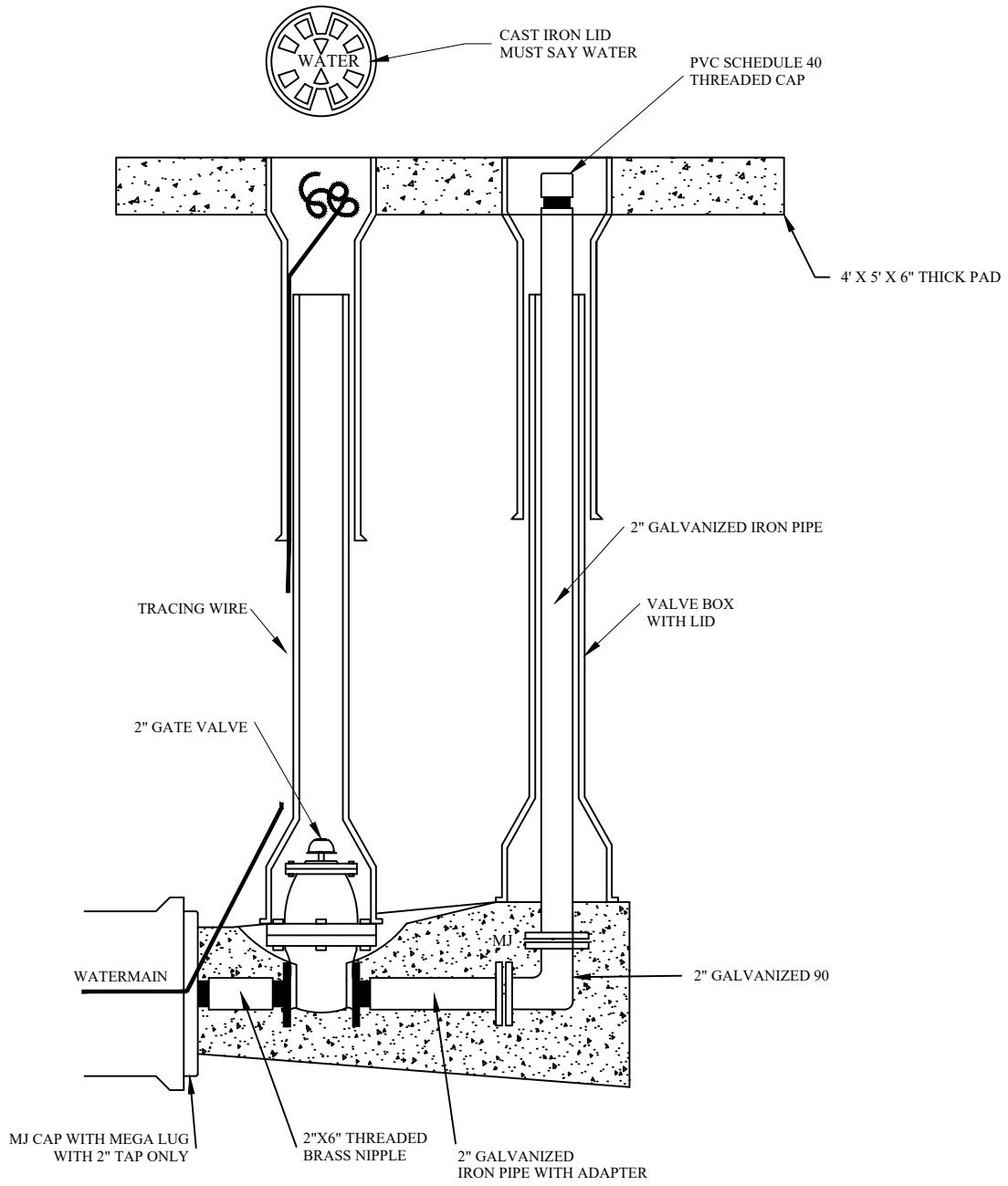

NOTES:

1. INSPECTION: PRIOR TO BACKFILLING AROUND THRUST BLOCK, SECURE INSPECTION OF INSTALLATION BY CITY ENGINEER.
2. BACKFILL: INSTALL AND COMPACT ALL BACKFILL MATERIAL PER SPECIFICATIONS.
3. CONCRETE: CLASS 2,000 MINIMUM. POUR CONCRETE AGAINST UNDISTURBED SOIL. THRUST BLOCK MUST MEET APWA.
4. TAPE: APPLY TAPE WRAP TO THE EXTERIOR OF ALL GALVANIZED PIPE PER AWWA C209
5. SPECIAL DESIGN: WATERMAINS 12" AND LARGER WILL REQUIRE SPECIAL WASHOUT ASSEMBLY DESIGN.
6. DRAINAGE: AFTER INSTALLATION OF WASHOUT VALVE ASSEMBLY, VERIFY THE WASHOUT VALVE RISER DRAINS TO GRAVEL.
7. WRAP ALL FOOTINGS PRIOR TO PLACEMENT OF THRUST BLOCKING

PREPARED BY:_____

SOUTH JORDAN

SOUTH JORDAN CITY

DATE	REVISIONS	BY	DRAWN: / DATE	WASHOUT VALVE ASSEMBLY	STANDARD DRAWING 3060

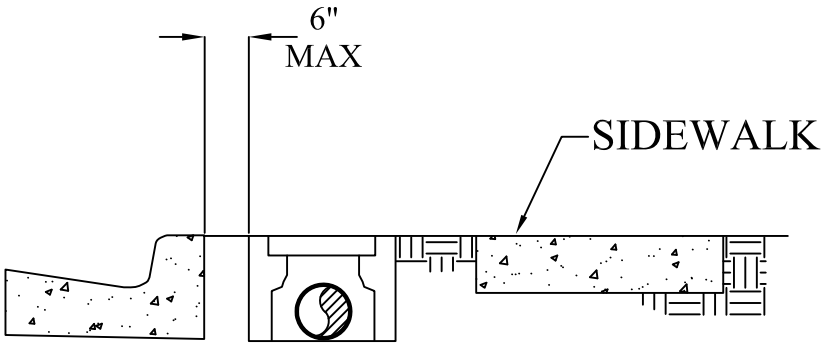

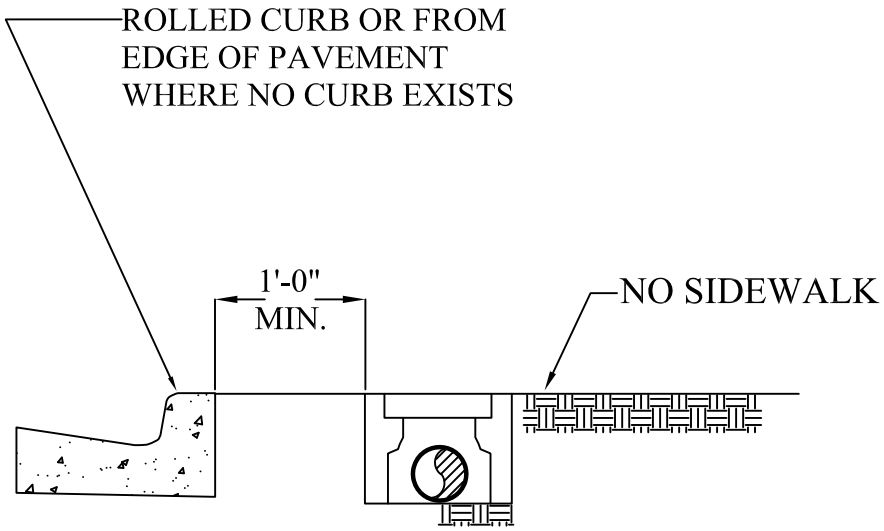

NOTES:

1. METER BOXES SHALL BE LOCATED WITHIN 6" FROM THE BACK OF CURB. LONGITUDINAL AXIS PERPINDICULAR TO AND DIRECTLY BEHIND CURB.
2. METER BOXES SHALL NOT BE LOCATED IN DRIVEWAYS
3. COMBINATION AIR RELEASE AND VACUUM VALVE ASSEMBLIES SHALL BE LOCATED BEHIND THE SIDEWALK BUT WITHIN THE PUBLIC SERVICES EASEMENTS (PSE)
4. NO CONCRETE SHALL BE INSTALLED WITHIN 2' OF THE WATER METER.

PREPARED BY: _____

SOUTH JORDAN CITY

DATE	REVISIONS	BY	DRAWN: / DATE	WATER METER LOCATION	STANDARD DRAWING 3065

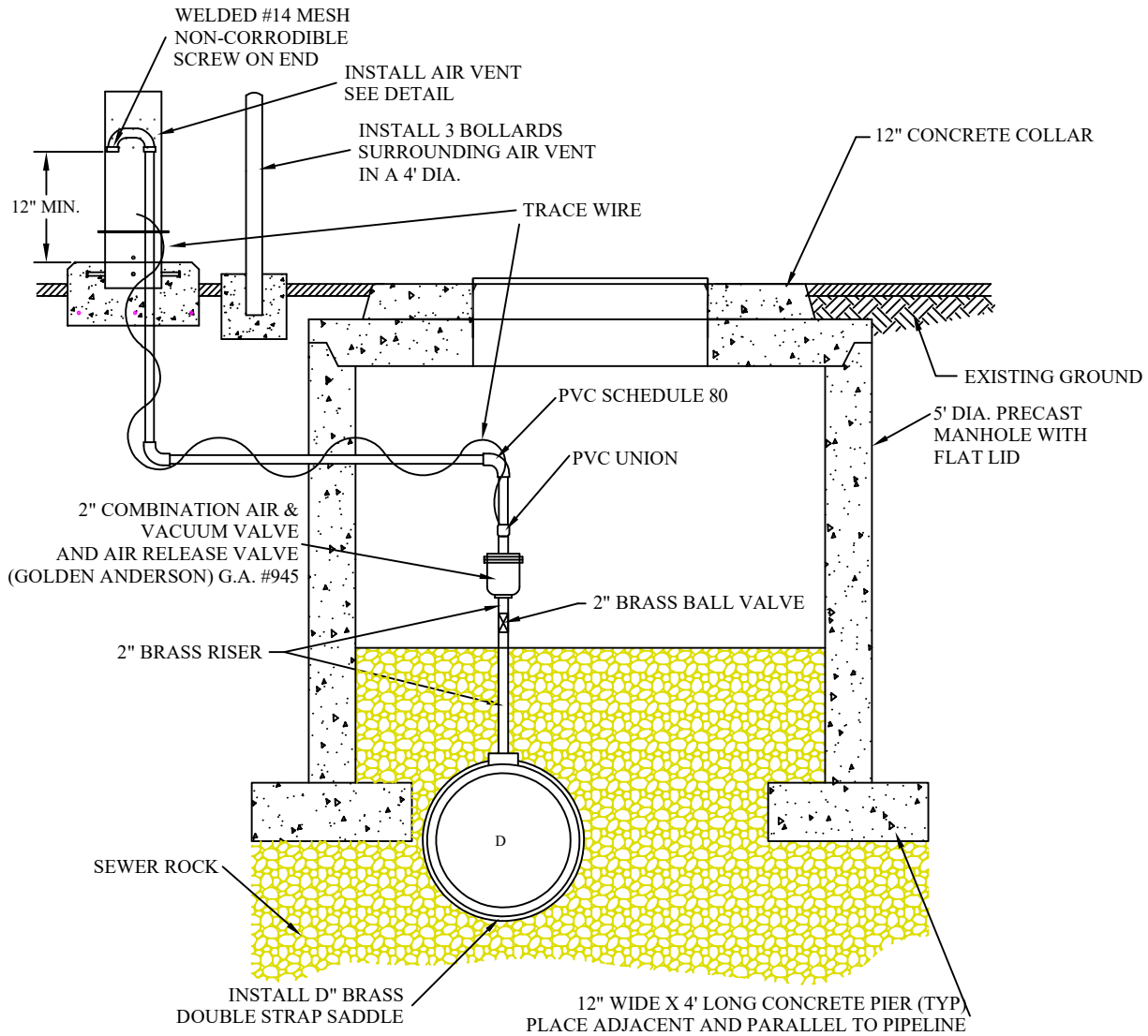

NOTES:

1. INSPECTION: PRIOR TO BACKFILLING AROUND THE ASSEMBLY, SECURE INSPECTION OF INSTALLATION BY ENGINEER.
2. BACKFILL: INSTALL AND COMPACT ALL BACKFILL MATERIAL PER SPECIFICATIONS.
3. CONCRETE: CLASS 4,000. APPLY A SEALING/CURING COMPOUND PER SPECIFICATIONS.
4. SMALL FITTINGS: PROVIDE BRASS FITTINGS AND NIPPLES IF NOT SPECIFIED OTHERWISE. DO NOT USE GALVANIZED MATERIALS BELOW DIELECTRIC UNION.

PREPARED BY: _____

SOUTH JORDAN
U T A H

SOUTH JORDAN CITY

DATE	REVISIONS	BY	DRAWN: / DATE	COMBINATION AIR VACUUM VALVE ASSEMLY	STANDARD DRAWING 3070

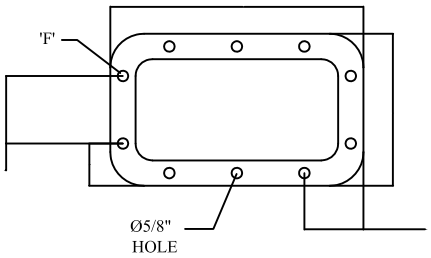

FLANGE DETAIL

ITEMS REMOVED FOR CLARITY, N.T.S.

		PARTS LIST
ITEM	QTY	DESCRIPTION
A	1	TS 12" x 6" x 1/4" x 2'-6"
B	1	TS 12" x 6" x 1/4" x 12"
C	1	1/4" PL - 6" x 1'-0"
D	2	1/4" PL - 9" x 1'-3"
E	4	Ø3/4" x 4" H.S.A.
F	10	Ø1/2" x 3" BREAKAWAY BOLTS

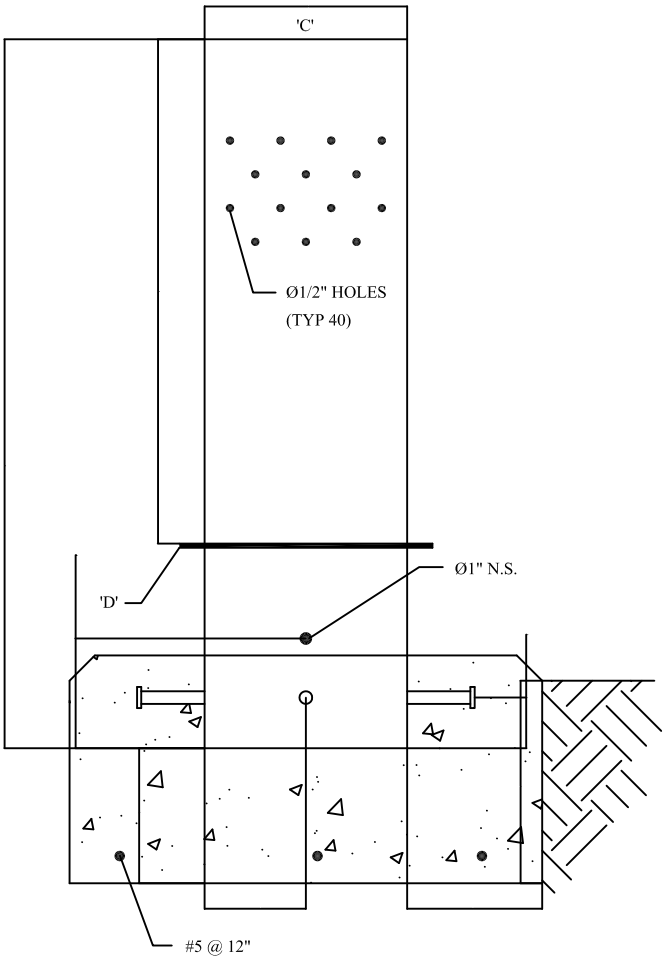

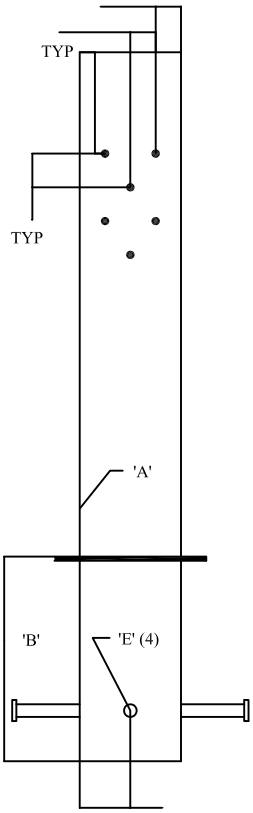

SIDE VIEW

N.T.S.

NOTES:

1. OPEN TO AIR-PLACE A NO. 14 MESH NON-CORRODIBLE SCREEN OVER THE OPEN END OF P.V.C. PIPE. ATTACH W/S.S. HOSE CLAMP.

2. HOT DIPPED GALVANIZED STEEL STAND PIPE FOR AIR VENT.

3. 1 ½" MIN. CHAMFER ALL AROUND CONCRETE BASE.

PREPARED BY:_____

SOUTH JORDAN

SOUTH JORDAN CITY

DATE	REVISIONS	BY	DRAWN: / DATE	AIR VENT DETAIL	STANDARD DRAWING 3075

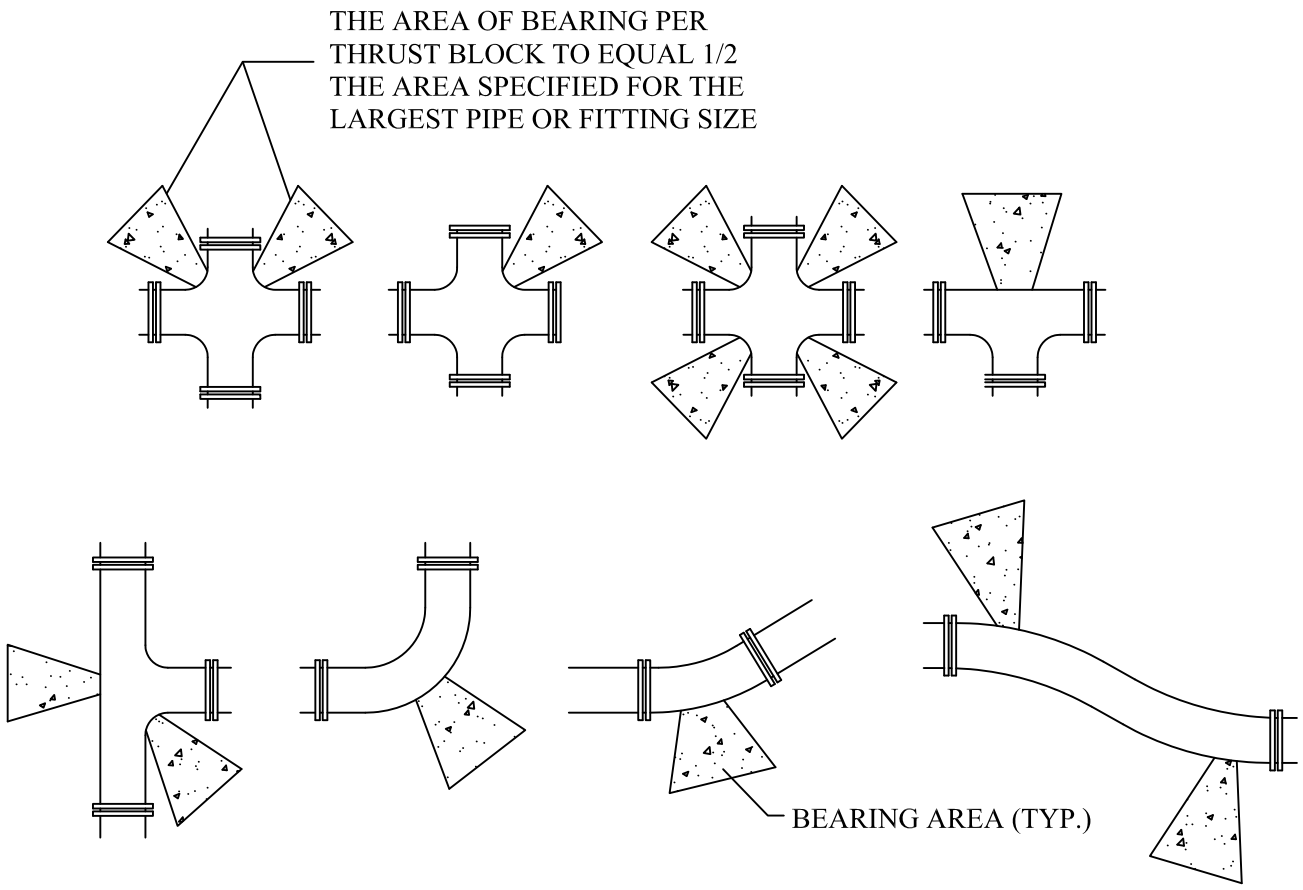

NOTES:

1. INSPECTION: PRIOR TO BACKFILLING AROUND THRUST BLOCK, SECURE INSPECTIONS OF INSTALLATION BY ENGINEER.
2. BACKFILL: INSTALL AND COMPACT ALL BACKFILL MATERIAL PER SPECIFICATIONS.
3. CONCRETE: CLASS 2,000 MINIMUM. POUR CONCRETE AGAINST UNDISTURBED SOIL.
4. PIPE JOINTS: DO NOT COVER WITH CONCRETE. LEAVE COMPLETELY ACCESSIBLE.
5. GREASE: APPLY POLY-FM GREASE TO ALL BURIED METAL SURFACES. WRAP WITH 8 MIL THICK POLYETHYLENE SHEET AND TAPE WRAP.
6. SPECIAL CONSTRUCTION REQUIREMENTS:
   A. THRUST DESIGN FOR PIPE SIZES OR CONFIGURATIONS NOT SHOWN REQUIRE SPECIAL DESIGN.
   B. BEARING AREAS, VOLUMES, AND SPECIAL THRUST BLOCKING DETAILS SHOWN ON DRAWINGS TAKE PRECEDENCE OVER THIS PLAN.
   C. REINFORCING STEEL BARS TO BE EPOXY COATED AT LEAST 15 MILS THICK. MINIMUM STRESS YIELD STRENGTH OF TIE DOWN BARS IS 70,000 PSI.
   D. LOCKING RESTRAINT DEVICES MAY BE USED IN CONJUNCTION WITH CONCRETE THRUST BLOCKING (AT OPTION OF ENGINEER).
   E. RESTRAINT SIZING IS BASED UPON A MAXIMUM OPERATING PRESSURE OF 150 PSI AND A TEST PRESSURE OF 200 PSI, AND A MINIMUM SOIL BEARING STRESS OF 2,000 PSF. OPERATING PRESSURES IN EXCESS OF 150 PSI OR SOILS WITH LESS THAN 2,000 POUND BEARING STRENGTH WILL REQUIRE SPECIAL DESIGN.
   F. CONCRETE MUST BE ALLOWED TO CURE IN THRUST RESTRAINTS FOR 5 DAYS PRIOR TO PRESSURIZING WATER LINES OR HAVE ADDITIONAL APPROVED THRUST RESTRAINTS INSTALLED PRIOR TO PRESSURIZING THE WATER LINE.
7. MEGALUGS REQUIRED ON ALL FITTINGS

MINIMUM BEARING AREA IN SQ. FT.					
SIZE OF PIPE	TEES, VALVES DEAD ENDS	90° BENDS	45° BENDS	22 1/2° BENDS	11 1/4° BENDS
4"	2	3	2	2	2
6"	4	5.5	3	1.5	1
8"	6.5	9.5	5	2.75	1.5
12"	14	20	11	5.5	3
14"	19	26.5	14.5	7.5	4
16"	24	34	18.5	9.5	6
20"	27	52	28.5	14.5	16
24"	53	74	41	21	53
30"	81	114	62	32	16

PREPARED BY: _____

SOUTH JORDAN CITY

DATE	REVISIONS	BY	DRAWN: / DATE	DIRECT BEARING THRUST BLOCKS	STANDARD DRAWING 3080

TYPE 'A' RESTRAINT

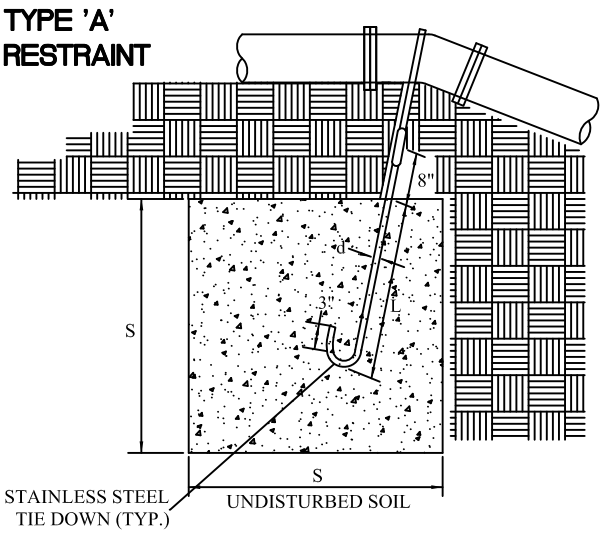

TYPE 'B' RESTRAINT

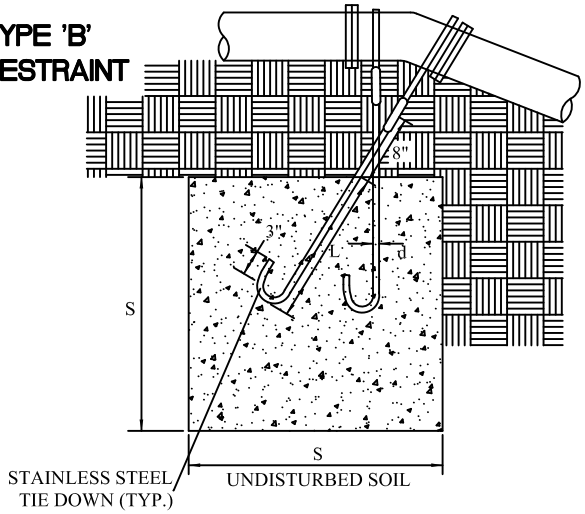

TYPE 'A' RESTRAINT

FOR 11 1/4°-22 1/2° VERTICAL BENDS

TABLE OF DIMENSIONS

	VB		S	d	L
PIPE SIZE NOMIN. DIAMETER - INCH	VERTICAL BEND DEGREES	NO. OF CU FT. OF CONC. BLOCKING	SIDE OF CUBE FEET	DIAMETER OF SHACK OR REBAR RODS - INCH	DEPTH OF RODS IN CONCRETE FT.
4"	11 1/4°	8	2.O	5/8"	1.5
	22 1/2°	15.6	2.5	5/8"	2.O
6"	11 1/4°	15.6	2.5	5/8"	2.O
	22 1/2°	34.3	3.25	5/8"	2.O
8"	11 1/4°	27	3.O	5/8"	2.O
	22 1/2°	64	4.O	5/8"	2.O
12"	11 1/4°	64	4.O	3/4"	2.O
	22 1/2°	125	5.O	3/4"	3.O
16"	11 1/4°	1O7	4.25	7/8"	3.O
	22 1/2°	216	6.O	7/8"	4.O
2O"	11 1/4°	138	5.17	1"	3.5
	22 1/2°	334	6.94	1"	4.O
24"	11 1/4°	24O	6.22	1"	4.O
	22 1/2°	476	7.81	1"	4.O
3O"	11 1/4°	369	7.17	1"	4.O
	22 1/2°	733	9.O2	1"	4.O

TYPE 'B' RESTRAINT

FOR 45° VERTICAL BENDS

TABLE OF DIMENSIONS

	VB		S	d	L
PIPE SIZE NOMIN. DIAMETER - INCH	VERTICAL BEND DEGREES	NO. OF CU C.Y. OF CONC. BLOCKING	SIDE OF CUBE FEET	DIAMETER OF SHACK OR REBAR RODS - INCH	DEPTH OF RODS IN CONCRETE FT.
4"	45°	1	3.O	5/8"	2.O
				5/8"	
6"	45°	2.37	4.O	5/8"	2.5
				5/8"	
8"	45°	3.97	4.75	5/8"	2.O
				5/8"	
12"	45°	9.O4	6.25	5/8"	4.O
				5/8"	
16"	45°	17.24	7.75	3/4"	4.O
				3/4"	
2O"	45°	26.52	8.95	3/4"	4.O
				3/4"	
24"	45°	37.82	1O.O7	3/4"	4.O
				3/4"	
3O"	45°	58.26	11.63	3/4"	4.O
				3/4"	

PREPARED BY: _____

SOUTH JORDAN
U T A H

SOUTH JORDAN CITY

DATE	REVISIONS	BY

DRAWN:

DATE

TIE DOWN THRUST RESTRAINTS

STANDARD DRAWING

3085

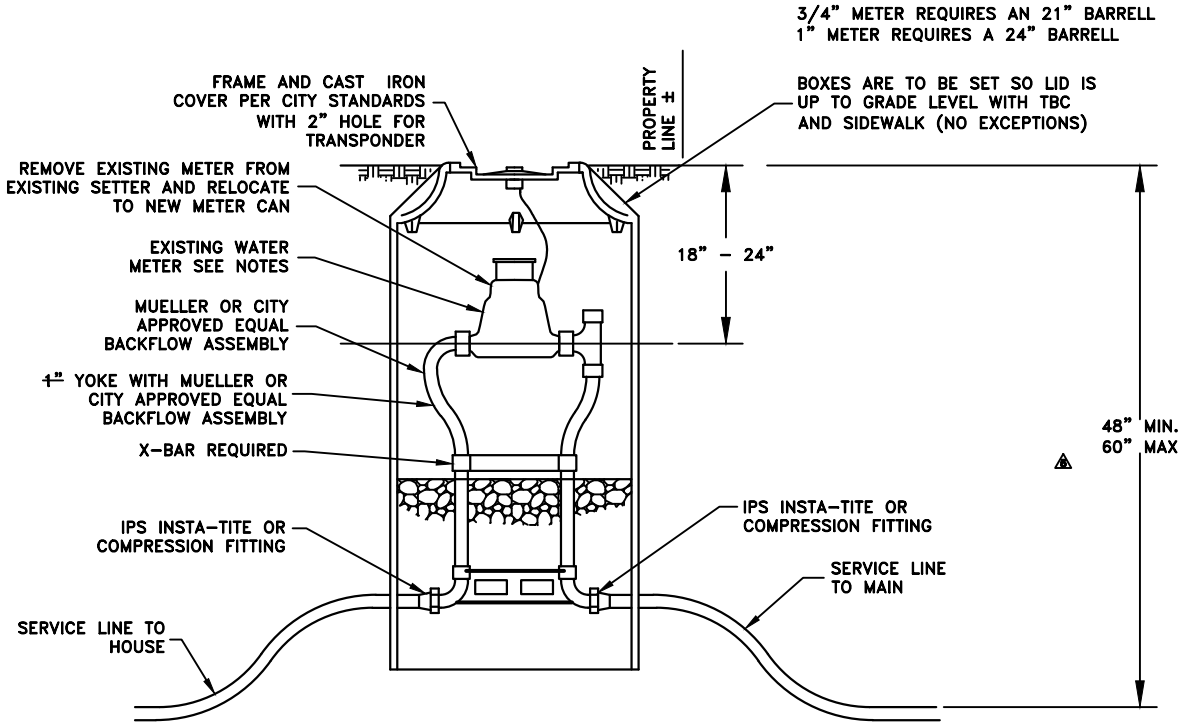

5/8 x 3/4" SETTER FORD VBHC72-21WR-MM-33NL
1" SETTER FORD VBHC74-21WRT-MM-44NL
1" x 3/4" SETTER MUELLER B2434R-6AN

METER SERVICE
N.T.S.

COMPRESSION FITTINGS ARE EITHER:
FORD QUICK JOINTS OR
MUELLER 110 COMPRESSION

NOTES:

1. INSPECTION: PRIOR TO BACKFILLING AROUND THE METER BOX, SECURE INSPECTION OF INSTALLATION BY ENGINEER.

2. BACKFILLING: INSTALL ALL BACKFILL MATERIAL PER APWA SECTION 02320 IN LIFTS NOT EXCEEDING 6 INCHES AFTER COMPACTION. COMPACT EACH LIFT TO A MINUMUM RELATIVE DENSITY OF 96 PERCENT.

3. PLACEMENT:
   A. DO NOT INSTALL METERS IN HARD SURFACE 2 FEET MINIMUM FROM LID.
   B. IN NEW CONSTRUCTION, INSTALL METER AT CENTER OF LOT OF PER SOUTH JORDAN CITY REQUIREMENTS.
   C. ALL METERS ARE TO BE INSTALLED IN THE PARK STRIP OR WITHIN 4 FEET OF THE PROPERTY LINE (STREET SIDE) AND OUTSIDE OF HARD SURFACE.

PREPARED BY:_____

SOUTH JORDAN

SOUTH JORDAN CITY

		DRAWN:	3/4" AND 1" METER SERVICE	STANDARD DRAWING 3090
		DATE		
	BY			

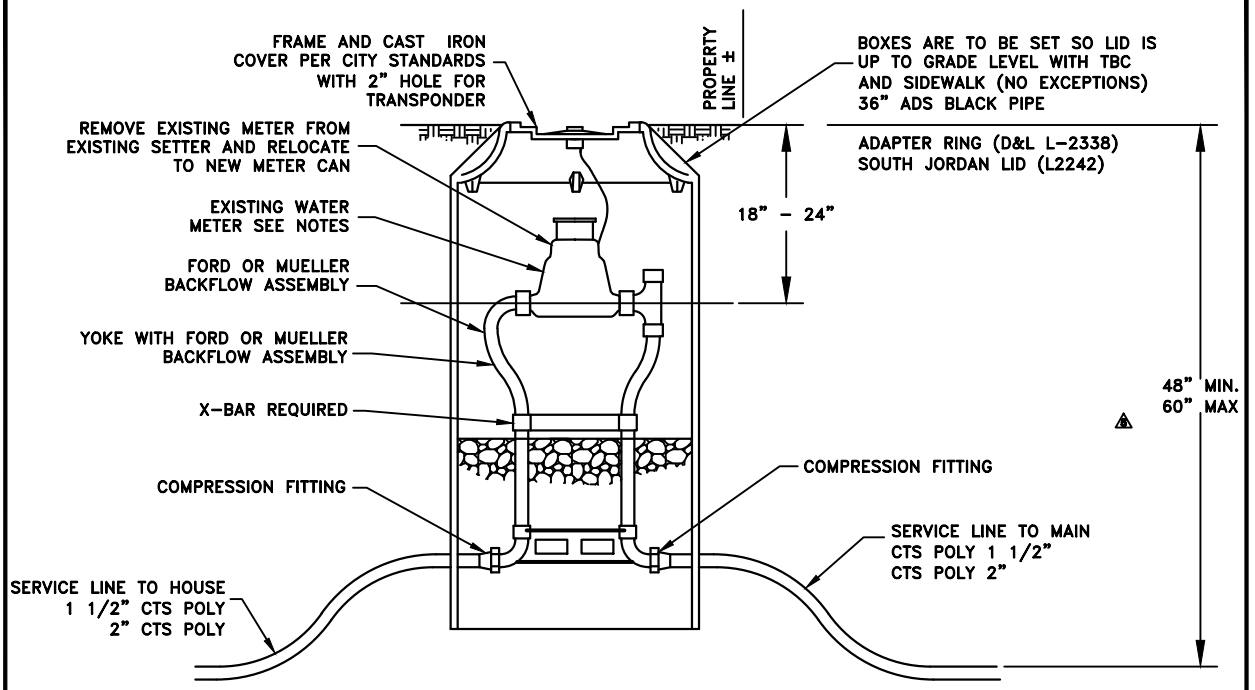

(DUAL CHECK F/ SETTERS)
(BALL ANGLE METER STOPS)

COMPRESSION FITTINGS ARE EITHER:
FORD QUICK JOINTS OR
MUELLER 110 COMPRESSION

METER SERVICE

N.T.S.

SETTER LESS BY-PASS AND NON LEADED
FORD 1 1/2" VBHH76-18-1166NL
FORD 2" VBHH77-18-1177NL
MUELLER 2" B2422-2N
MUELLER 1 1/2" B2422-2N

NOTES:

1. INSPECTION: PRIOR TO BACKFILLING AROUND THE METER BOX, SECURE INSPECTION OF INSTALLATION BY ENGINEER.

2. BACKFILLING: INSTALL ALL BACKFILL MATERIAL PER APWA SECTION 02320 IN LIFTS NOT EXCEEDING 6 INCHES AFTER COMPACTION. COMPACT EACH LIFT TO A MINUMUM RELATIVE DENSITY OF 96 PERCENT.

3. PLACEMENT:
   A. DO NOT INSTALL METERS IN HARD SURFACE 2 FEET MINIMUM FROM LID.
   B. IN NEW CONSTRUCTION, INSTALL METER AT CENTER OF LOT OF PER SOUTH JORDAN CITY REQUIREMENTS.
   C. ALL METERS ARE TO BE INSTALLED IN THE PARK STRIP OR WITHIN 4 FEET OF THE PROPERTY LINE (STREET SIDE) AND OUTSIDE OF HARD SURFACE.

PREPARED BY:

SOUTH JORDAN CITY

		DRAWN:	1 1/2" AND 2" METER SERVICE	STANDARD DRAWING 3091
		DATE		
	BY			

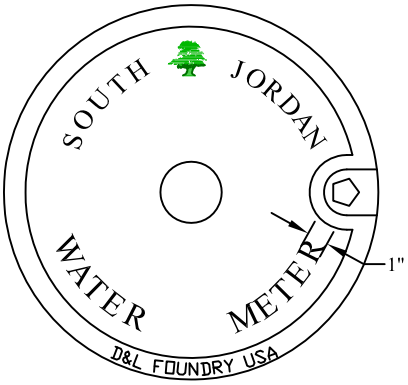

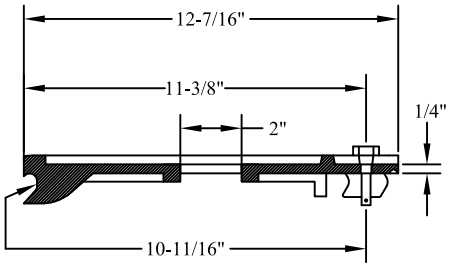

SECTION A-A

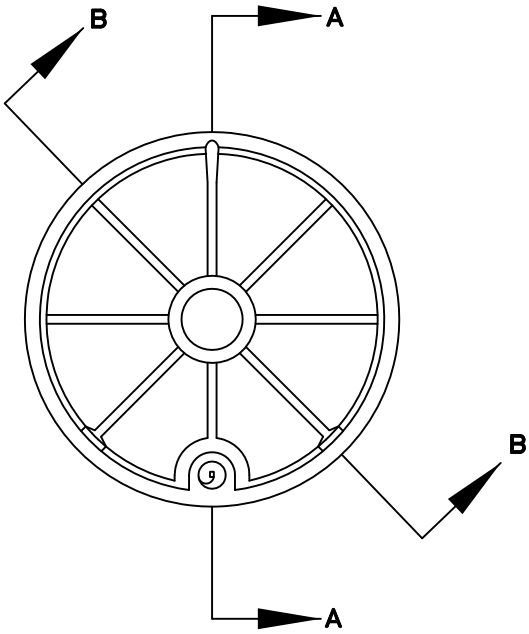

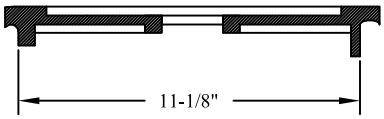

SECTION B-B

D&L FOUNDRY & SUPPLY
MODEL #L-2240-14
13 LBS.

WATER METER COVER

N.T.S.

PREPARED BY: _____

SOUTH JORDAN CITY

		DRAWN:	METER SERVICE	STANDARD DRAWING 3092
		DATE		
	BY			

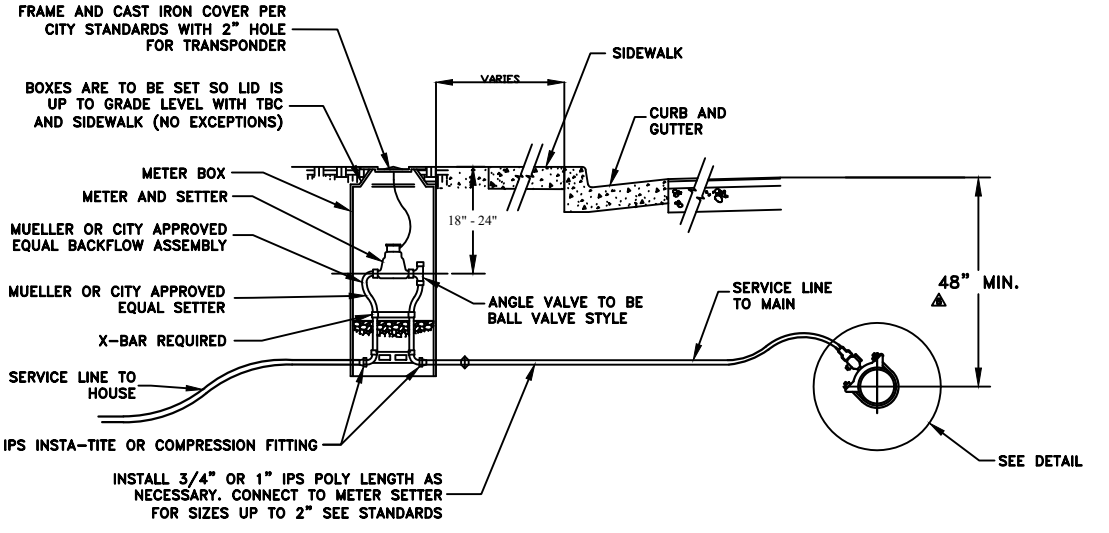

WATER SERVICE ADJUSTMENTS

NOTES:

1. FITTINGS – PROVIDE BRASS FITTINGS AND NIPPLES ON ALL SERVICE LINE CONNECTIONS. DO NOT USE GALVANIZED MATERIALS
2. INSPECTION: PRIOR TO BACKFILLING AROUND THE METER BOX, SECURE INSPECTION OF INSTALLATION BY ENGINEER.
3. BACKFILLING: INSTALL ALL BACKFILL MATERIAL PER APWA SECTION 02320 IN LIFTS NOT EXCEEDING 6 INCHES AFTER COMPACTION. COMPACT EACH LIFT TO A MINIMUM RELATIVE DENSITY OF 96 PERCENT.
4. PLACEMENT:
   A. DO NOT INSTALL METERS IN HARD SURFACE 2 FEET MINIMUM FROM LID.
   B. IN NEW CONSTRUCTION, INSTALL METER AT CENTER OF LOT OF PER SOUTH JORDAN CITY REQUIREMENTS.
   C. ALL METERS ARE TO BE INSTALLED IN THE PARK STRIP OR WITHIN 4 FEET OF THE PROPERTY LINE (STREET SIDE) AND OUTSIDE OF HARD SURFACE.

TYPICAL CULINARY WATER SERVICE CONNECTION

N.T.S.

NOTES:

1. INSPECTION – PRIOR TO BACKFILLING AROUND TAPS, SECURE INSPECTION OF INSTALLATION BY SOUTH JORDAN WATER DEPARTMENT
2. BACKFILL – INSTALL AND COMPACT ALL BACKFILL MATERIAL PER CITY STANDARD
3. TAPPING – PLACE TAPS A MINIMUM OF 36" APART. USE A TAPPING TOOL WHICH IS SIZED CORRESPONDING TO THE SIZE OF THE SERVICE LINE TO BE INSTALLED. NO TAPS WITHIN 36" OF END OF ANY PIPE.

TAPE – TEFLON TAPE OR PIPE DOPE IS REQUIRED ON ALL TAPS

COMPRESSION FITTINGS ARE EITHER:
FORD QUICK JOINTS OR
MUELLER 110 COMPRESSION

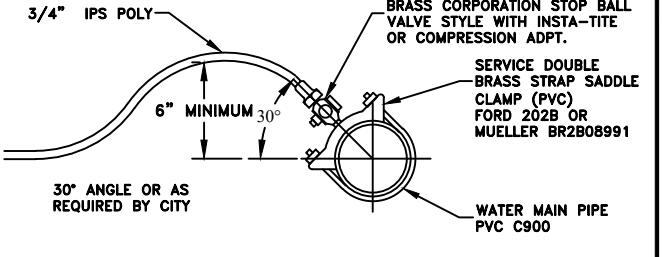

SERVICE TAPS

N.T.S.

PREPARED BY: _____

SOUTH JORDAN

SOUTH JORDAN CITY

DATE	REVISIONS	BY	DRAWN: / DATE	3/4" - 2" WATER METER PLAN SERVICE INSTALLATION	STANDARD DRAWING 3095

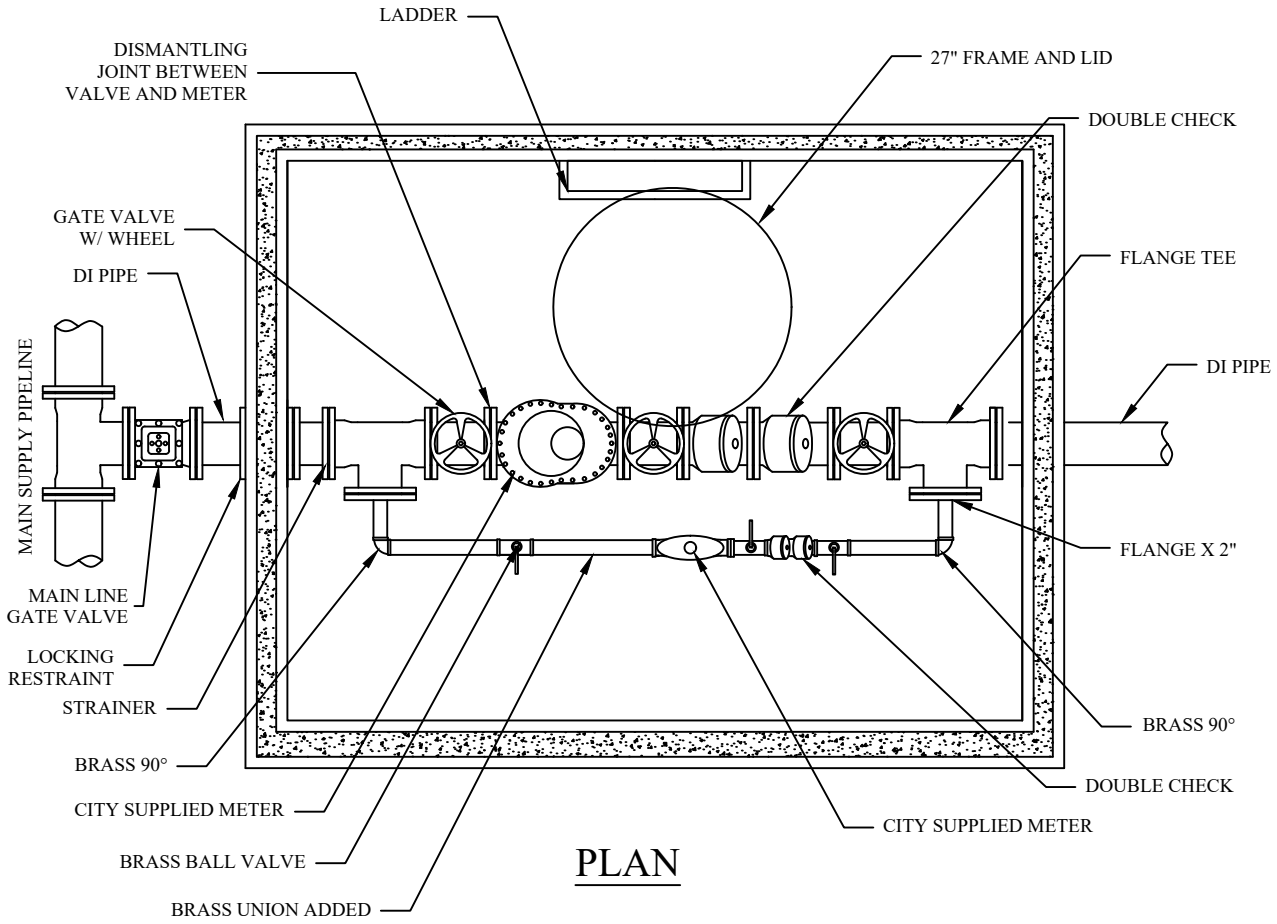

PLAN

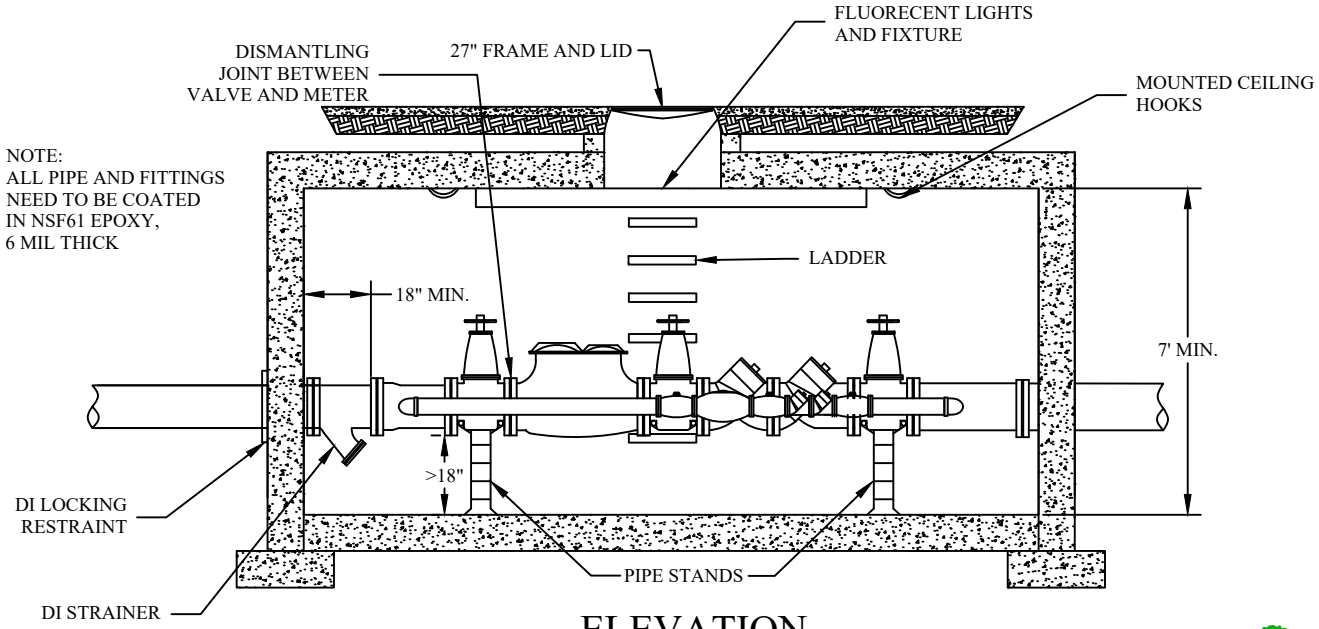

ELEVATION

PREPARED BY: _____

SOUTH JORDAN CITY

DATE	REVISIONS	BY	DRAWN: AP	3"- 8" WATER VAULT DETAIL	STANDARD DRAWING 3100
			DATE 10/08		

MODEL: ECLIPSE 88ss

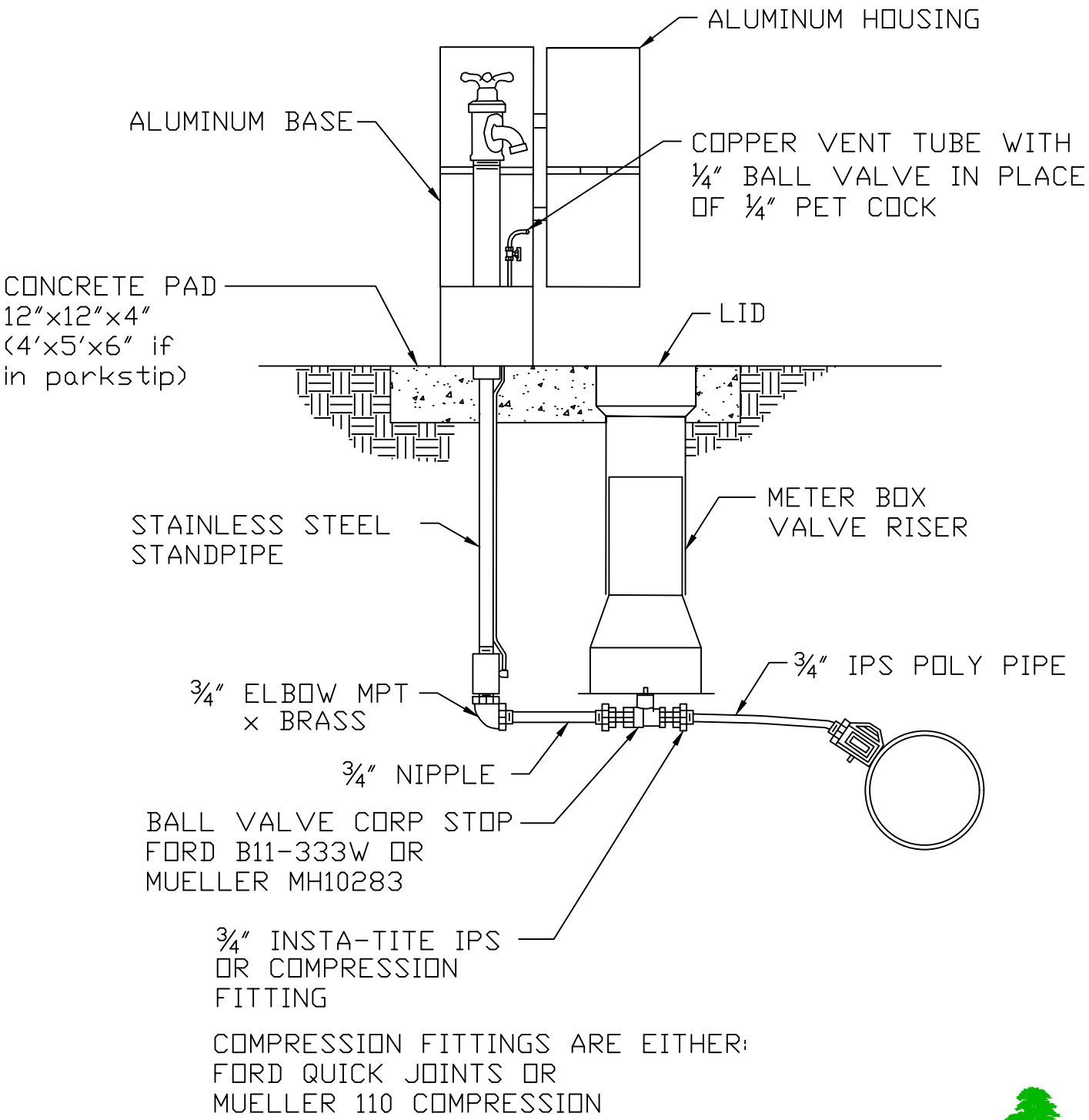

COMPRESSION FITTINGS ARE EITHER:
FORD QUICK JOINTS OR
MUELLER 110 COMPRESSION

PREPARED BY: _____

SOUTH JORDAN

SOUTH JORDAN CITY

DATE	REVISIONS	BY	DRAWN: KS / DATE 1/12	SAMPLING TAP FOR RESIDENTIAL SUBDIVISIONS	STANDARD DRAWING 3110

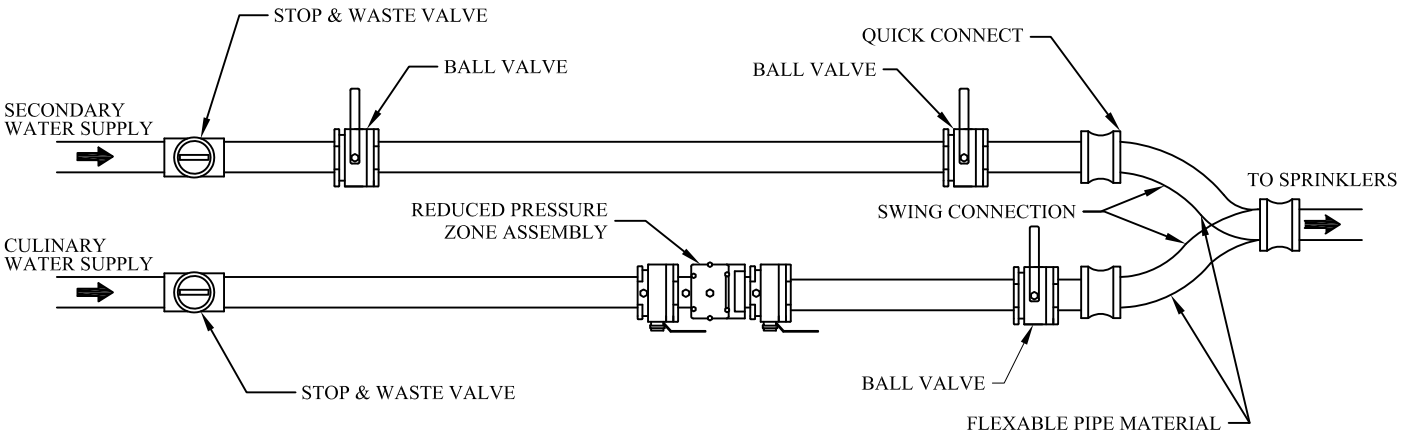

PLAN VIEW

NOT TO SCALE

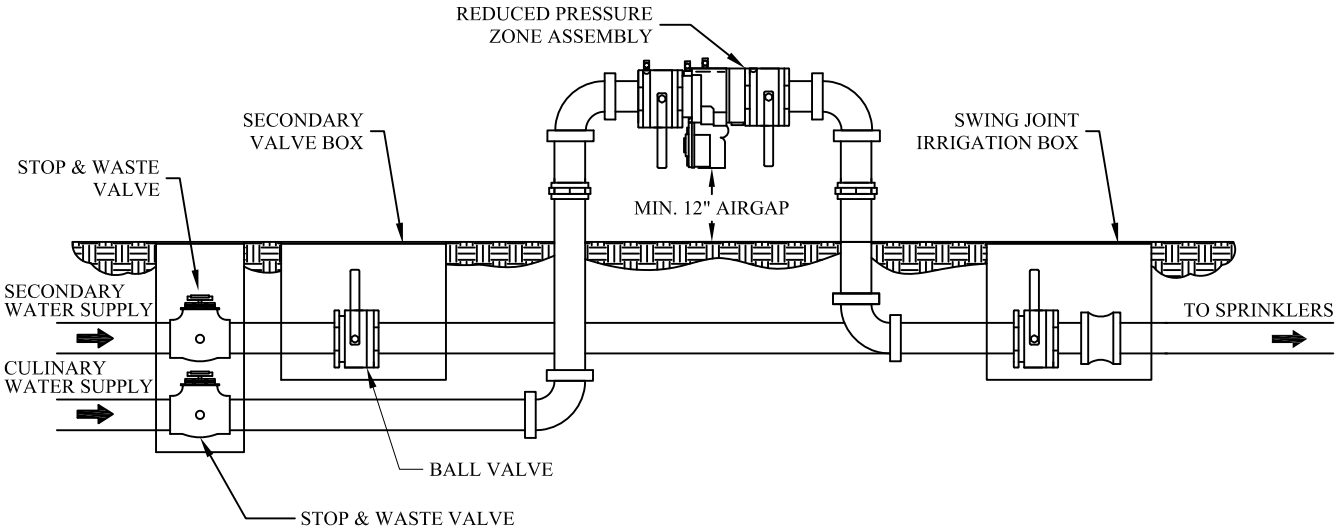

PROFILE VIEW

NOT TO SCALE

NOTES:

1. THE SWING CONNECTION IS INSTALLED SO THAT EITHER THE SECONDARY IRRIGATION WATER OR THE CULINARY WATER IS CONNECTED AND FEEDING THE SPRINKLER SYSTEM AT THE ONE TIME, NEVER BOTH.
2. THE REDUCED PRESSURE ZONE ASSEMBLY MUST BE LOCATED AT A MINIMUM OF 12" FROM WALL, FENCE OR OTHER OBSTACLE.
3. THE REDUCED PRESSURE ZONE ASSEMBLY MUST BE LOCATED AT A MINIMUM OF 12" ABOVE GRADE (NOT ALLOWED IN A PIT BELOW GRADE).
4. THE REDUCED PRESSURE ZONE ASSEMBLY MUST BE TESTED BY A CERTIFIED BACKFLOW TECHNICIAN ON AN ANNUAL BASIS.

SOUTH JORDAN
UTAH

SOUTH JORDAN CITY

DATE	REVISIONS	BY	DRAWN: KS DATE: 2/06	BACKFLOW PREVENTION DEVICE IRRIGATION CONNECTION	STANDARD DRAWING 2001

A-1180

with universal hole

SOUTH JORDAN
UTAH

Water Manhole Cover

(Platen-bottom cover)

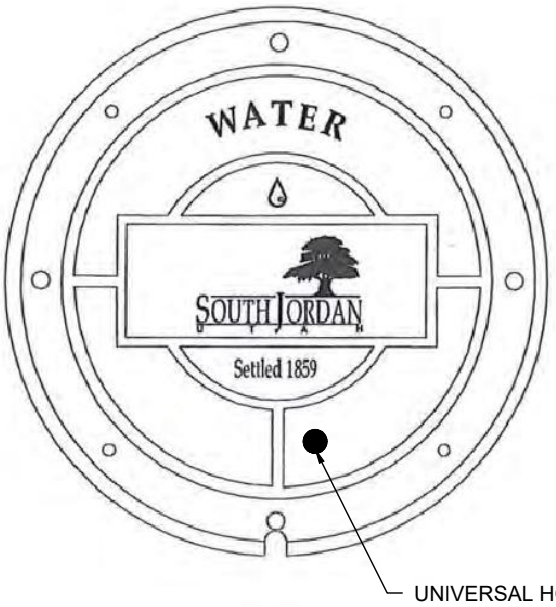

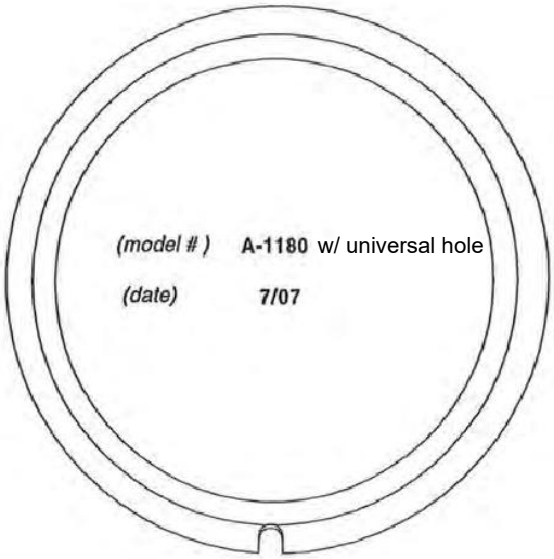

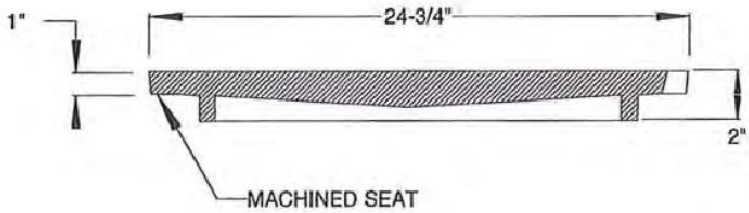

COVER EXCEEDS A COMPRESSION TEST OF UP TO 50,000 LBS.

CAST IRON conforms to ASTM A-48-93 Class 35B Meets H-20 Wheel Loading	**D&L model No. A-1180** with universal hole Made in Moses Lake, WA. USA	**D&L Foundry & Supply**
Designation: A-1180 / Date: July 2007	Prepared by: Jesse Walter D&L Foundry & Supply Inc. (not to scale)	CA Sales: (707) 557-4525 Fax: (707) 557-4655 UT Sales: (801) 785-5015 Fax: (801) 785-0835 WA Sales: (509) 765-7952 Fax: (509) 765-8124

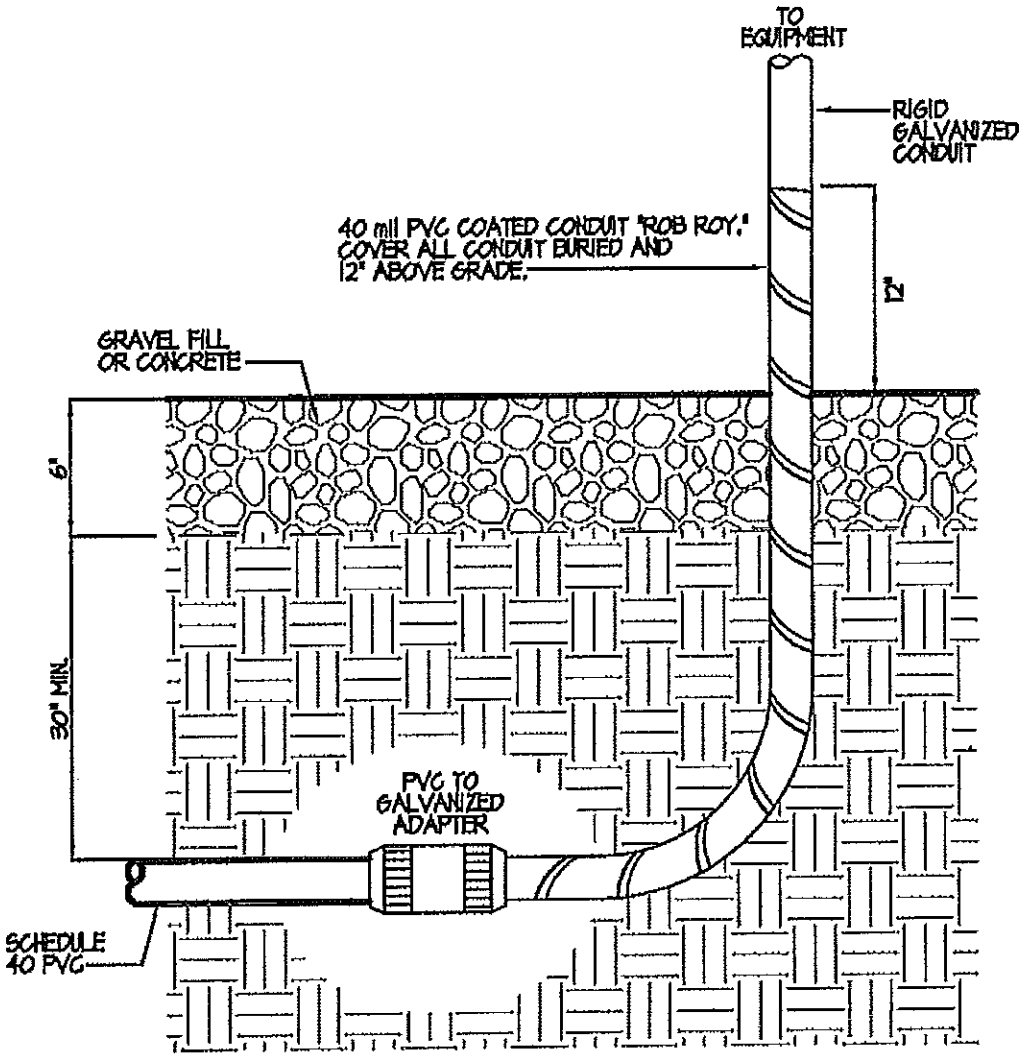

CONDUIT TERMINATION UNDER EQUIPMENT (8 / E-2)

SCALE: NONE

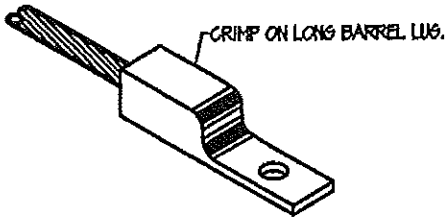

BONDING LUG (4 / E-2)

SCALE: NONE

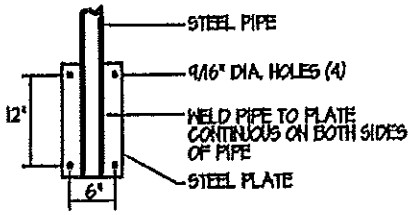

MAST ANCHOR DETAIL (1 / E-2)

SCALE: NONE

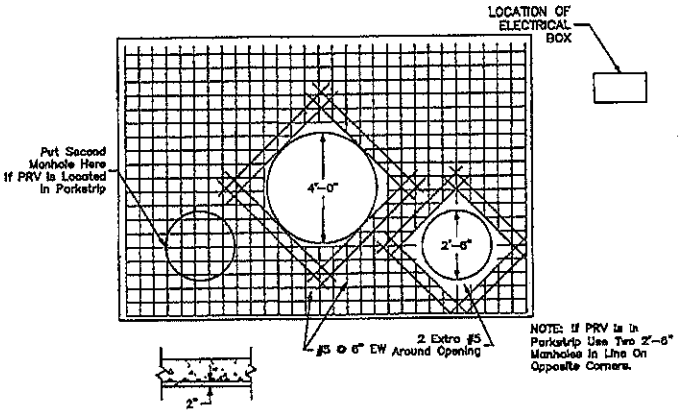

1 REBAR TOP SLAB (ROADWAY)
Not to Scale

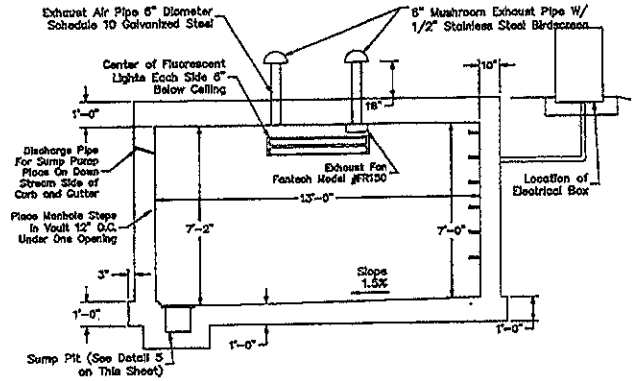

6 PRV VAULT FRONT SECTION
Not to Scale

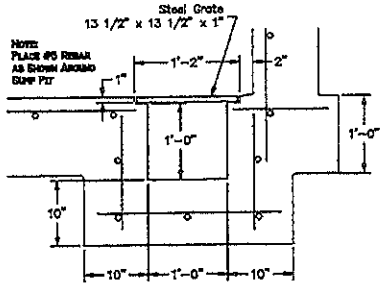

A-A SUMP SECTION
Not to Scale

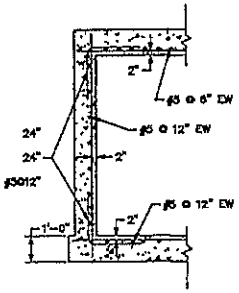

2 REBAR IN WALL
Not to Scale

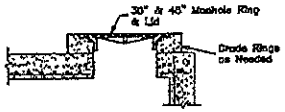

8 VAULT ACCESS
Not to Scale

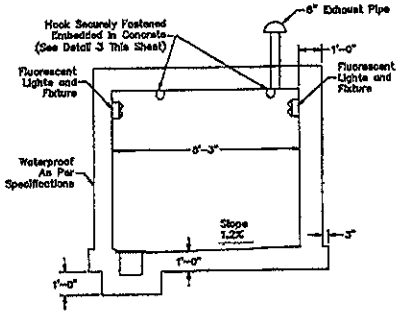

9 PRV VAULT END SECTION
Not to Scale

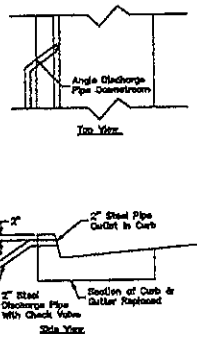

7 SUMP PUMP DISCHARGE
To Curb & Gutter
Not to Scale

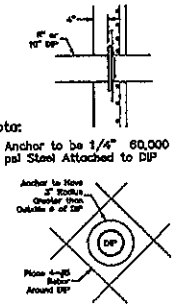

10 WALL ANCHOR DETAIL
Not to Scale

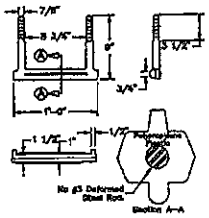

4 STEPS DETAIL
Not to Scale

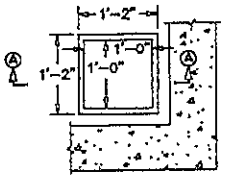

5 SUMP TOP VIEW
Not to Scale

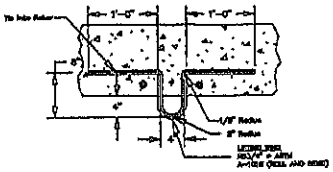

3 HOOK
Not to Scale

SOUTH JORDAN
U T A H

SOUTH JORDAN CITY
PRV VAULT DETALS

SIZE 10" OR SMALLER	DWG NO.	REV
SCALE		SHEET 1/3

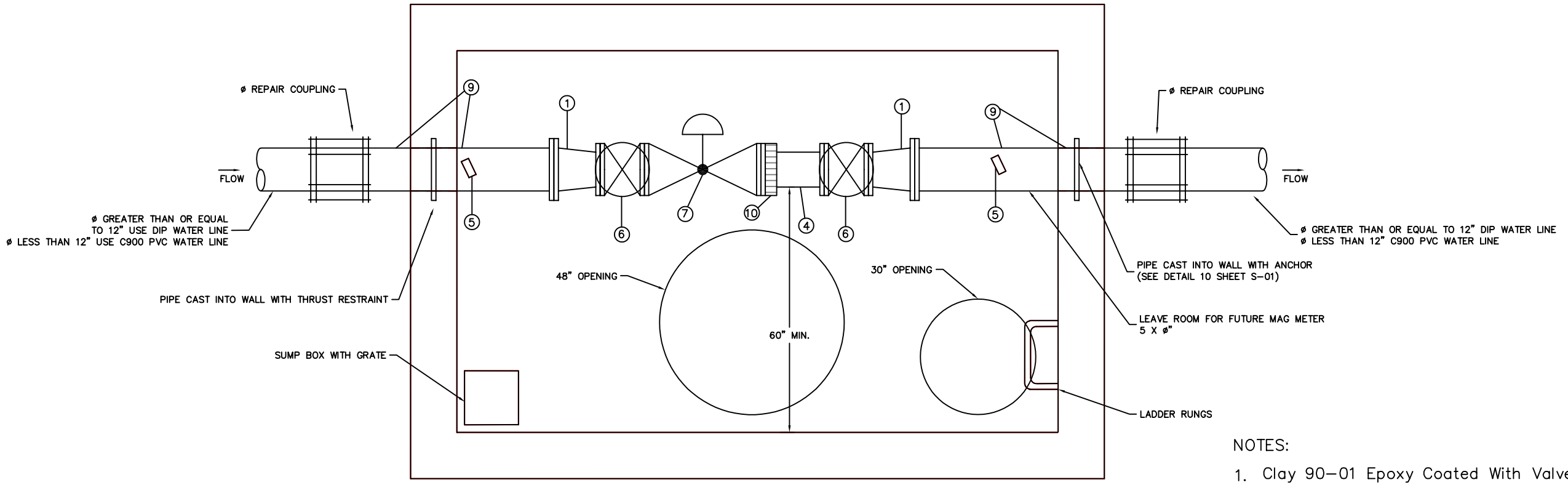

Top View

NOTES:

1. Clay 90-01 Epoxy Coated With Valve Position Indicator X 101.
2. Pipe or PRV Stands are Required Under All PRV's, All Tees and All Reducers. Also in Locations Shown. Stands Shall Be "Standon Pipe Supports" or an Approved Equal. (See Detail on Sheet DT-06)
3. Pressure Gage Shall Be McDaniel or Approved Equal.
4. All pipe and fittings need to be coated in NSF1 epoxy, 6 mil thick.

PRESSURE REDUCING VALVE INSTALLATION

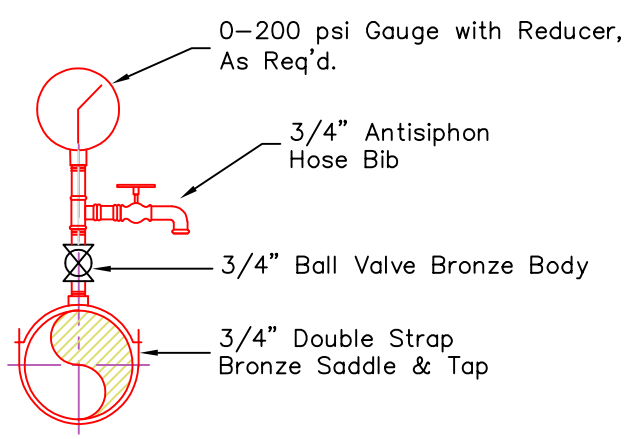

11 PRESSURE GAUGE ASSEMBLY
Not to Scale

1. ø" x 8" DI Reducer & Stand for PRV
4. 8" Epoxy Coated Steel Spool, flg x flg
5. 0-200 psi Liquid Filled Pressure Gage (See Detail 11)
6. 8" Gate Valve w/ handwheel & Stand, flg x flg
7. 8" Pressure Reducing Valves & Stands (See Notes)
9. ø" Di Pipe, flg x PE
10. Flange Adapter Coupling

SOUTH JORDAN UTAH
1600 Towne Center Drive / South Jordan, UT 84095
Telephone: (801) 254-3742 / Fax: (801) 253-5235

SOUTH JORDAN CITY
PRV VAULT DETALS

SIZE	DWG NO.	REV
10" OR SMALLER		
SCALE		SHEET 2/3

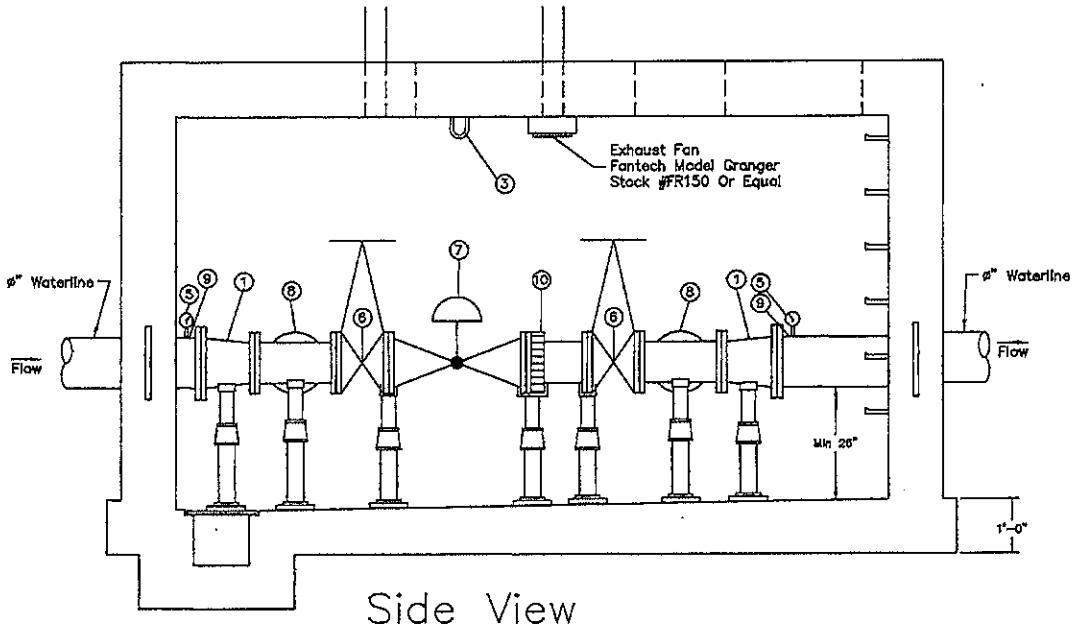

Side View

PRESSURE REDUCING VALVE INSTALLATION

1. ø" x 8" DI Reducer & Stands for PRV #15
3. Hook (2 typ.) One Over PRV (See Detail 3 on Sheet S-01)
4. 8" Epoxy Coated Steel Spool, flg x flg
5. 0-200 psi Liquid Filled Pressure Gage (see Detail 11)
6. 8" Gate Valve w/ handwheel & Stand, flg x flg
7. 8" Pressure Reducing Valves & Stands (See Notes)
8. 8" DI Tee & Stand, flg x flg x flg
9. ø" DI Pipe, flg x PE For PRV
10. Flange Adapter Coupling

NOTES:

1. Clay 90-01 Epoxy Coated With Valve Position Indicator X 101.
2. Place Standon Model S92 Pipe Saddle Supports or Approved Equal Under all Tees.
3. Place Standon Model S96 or S89 Flange Saddle Supports or Approved Equal Under all PRV's.
4. Place Standon Model S96 Flanged Saddle Supports or Approved Equal Under all Valves.
5. Pressure Gage Shall Be McDaniel or Approved Equal.
6. See Sheet S-01 for Location of Exhaust Fan and Lights.

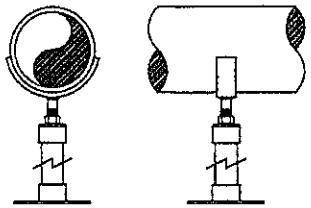

12 STANDON MODEL S92 PIPE SUPPORT DETAIL
Not to Scale

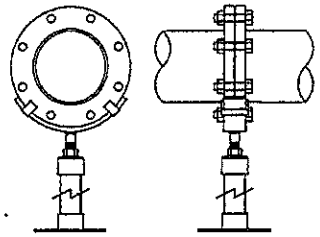

13 STANDON MODEL S96 FLANGE SADDLE SUPPORT DETAIL
Not to Scale

SOUTH JORDAN
U T A H

SOUTH JORDAN CITY
PRV VAULT DETALS

SIZE 10" OR SMALLER	DWG NO.	REV
SCALE		SHEET 3/3

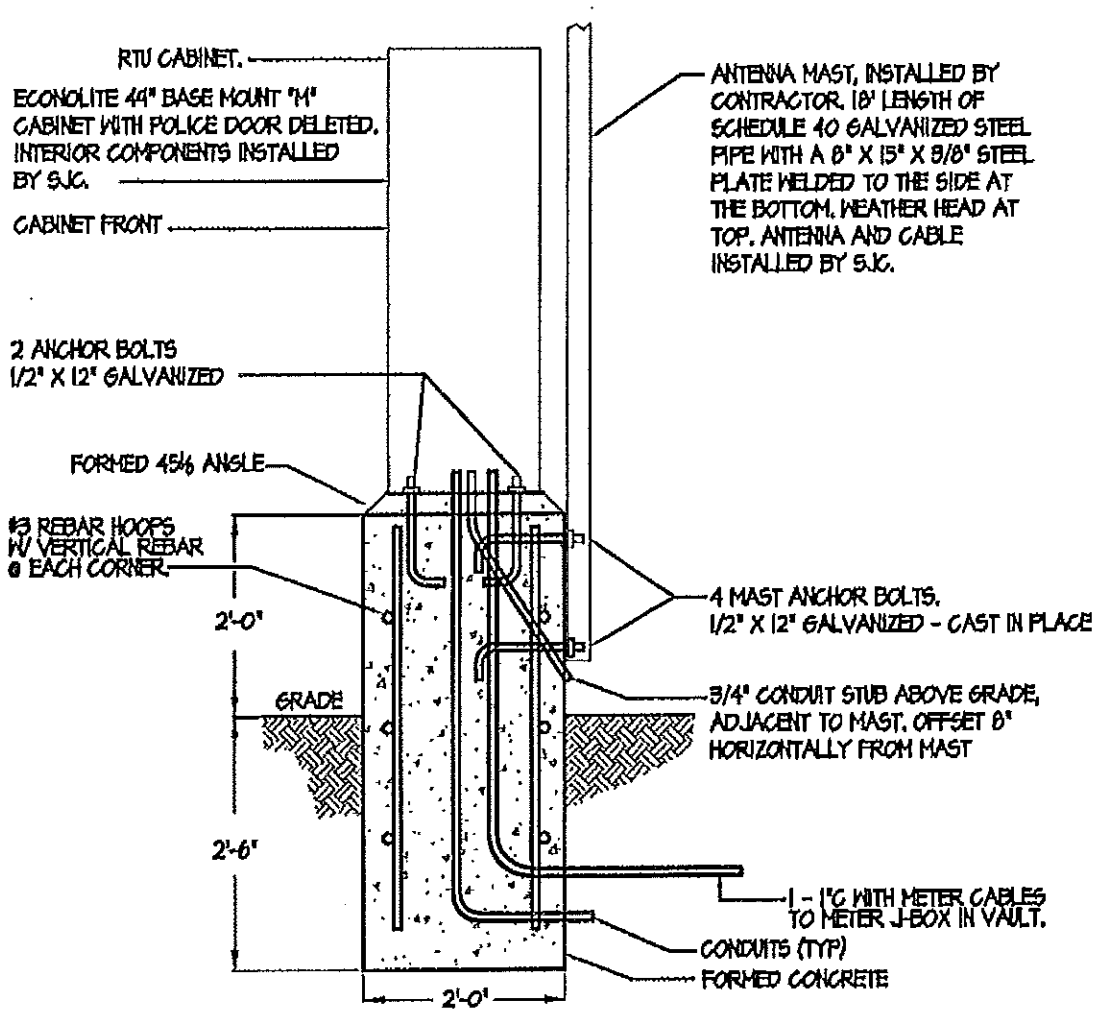

SJC RTU PEDESTAL ELEVATION

SCALE: NONE

9
E-2

LANDSCAPE
AND
IRRIGATION

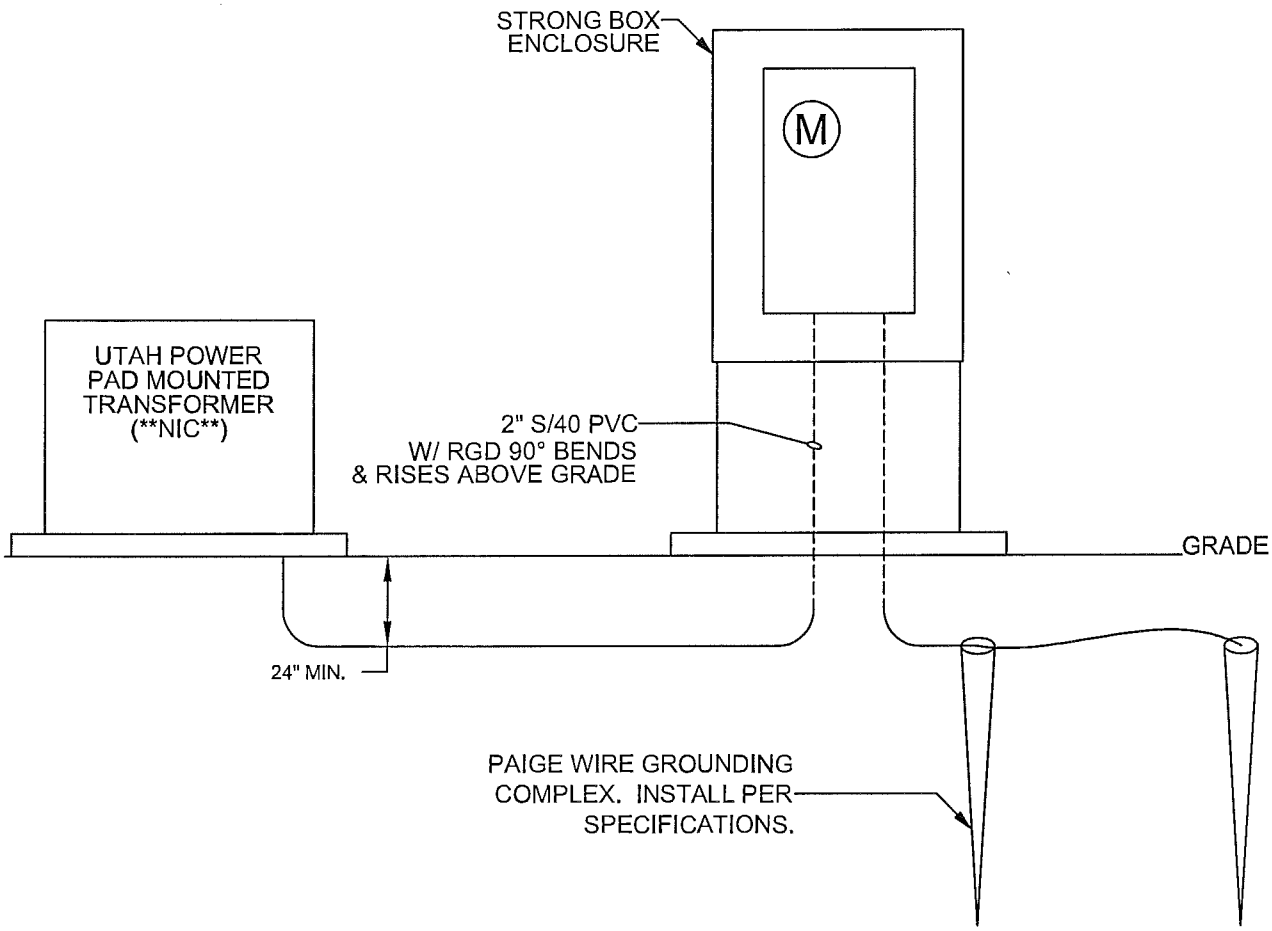

IRRIGATION DETAIL IRR-01
LINE DRAWING TRANSFORMER ENCLOSURE

version: 01, revision: 00, date: 8/2006

DALE WINCHESTER &
ASSOCIATES
2215 East Pincrest Lane
Sandy UT 84092
801 571-6060

SOUTH JORDAN CITY
PARKS DEPARTMENT
1600 West Towne Center Drive
South Jordan, Utah 84095
(801) 254-3742

SOUTH JORDAN

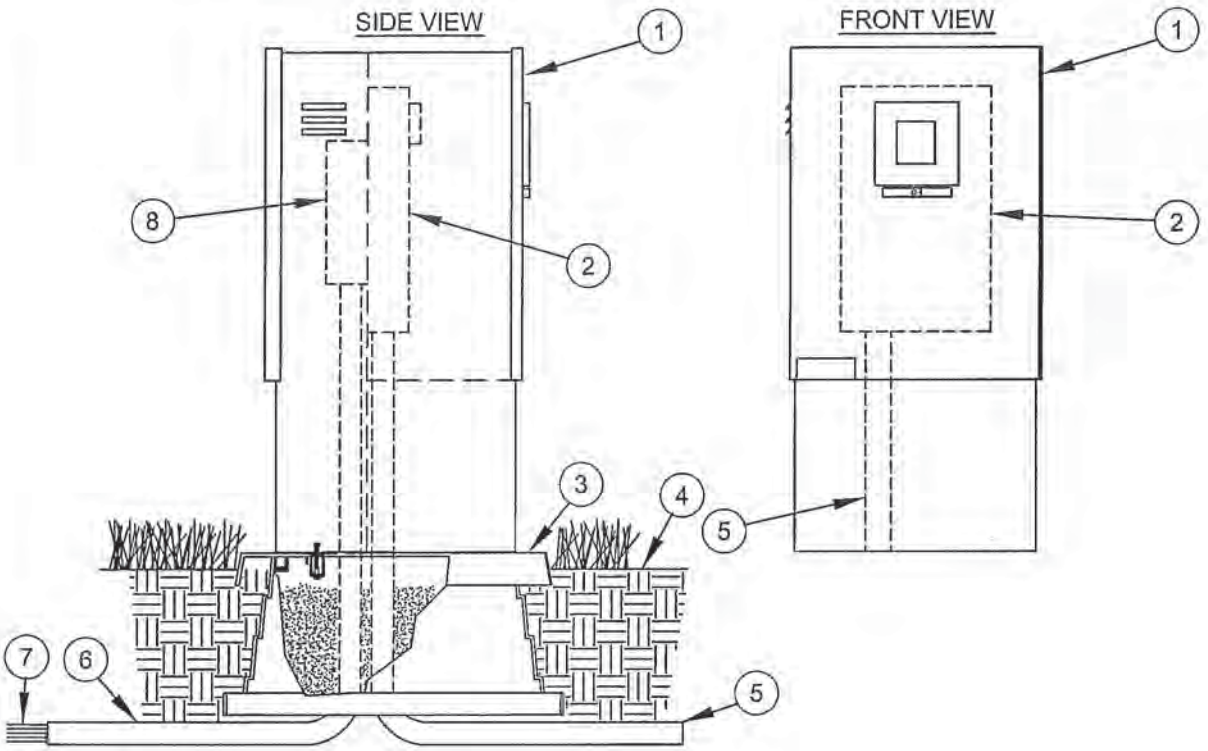

LEGEND

1. STRONG BOX BRAND METERED CONTROLLER ENCLOSURE, MODEL SB-24DSS/240V
2. METER/PANEL COMBINATION SQUARE D MODEL SC1624M
3. STRONG BOX BRAND QUICK PAD, MODEL QP-24
4. FINISH GRADE.
5. CONDUIT FOR LINE FEED INTO METER/PANEL COMBO. EXTEND INTO UP&L TRANSFORMER
6. PVC LONG SWEEP ELL - USE ONE SWEEP ELL PER CONTROLLER.
7. DIRECT BURIAL CONTROL WIRES TO CONTROL VALVES.
8. AUTOMATIC CONTROLLER.

IRRIGATION DETAIL IRR-02
STRONG BOX COMBO METER ENCLOSURE

version: 01, revision: 00, date: 8/2006

DALE WINCHESTER & ASSOCIATES
2215 East Pincrest Lane
Sandy UT 84092
801 571-6060

SOUTH JORDAN CITY
PARKS DEPARTMENT
1600 West Towne Center Drive
South Jordan, Utah 84095
(801) 254-3742

SOUTH JORDAN

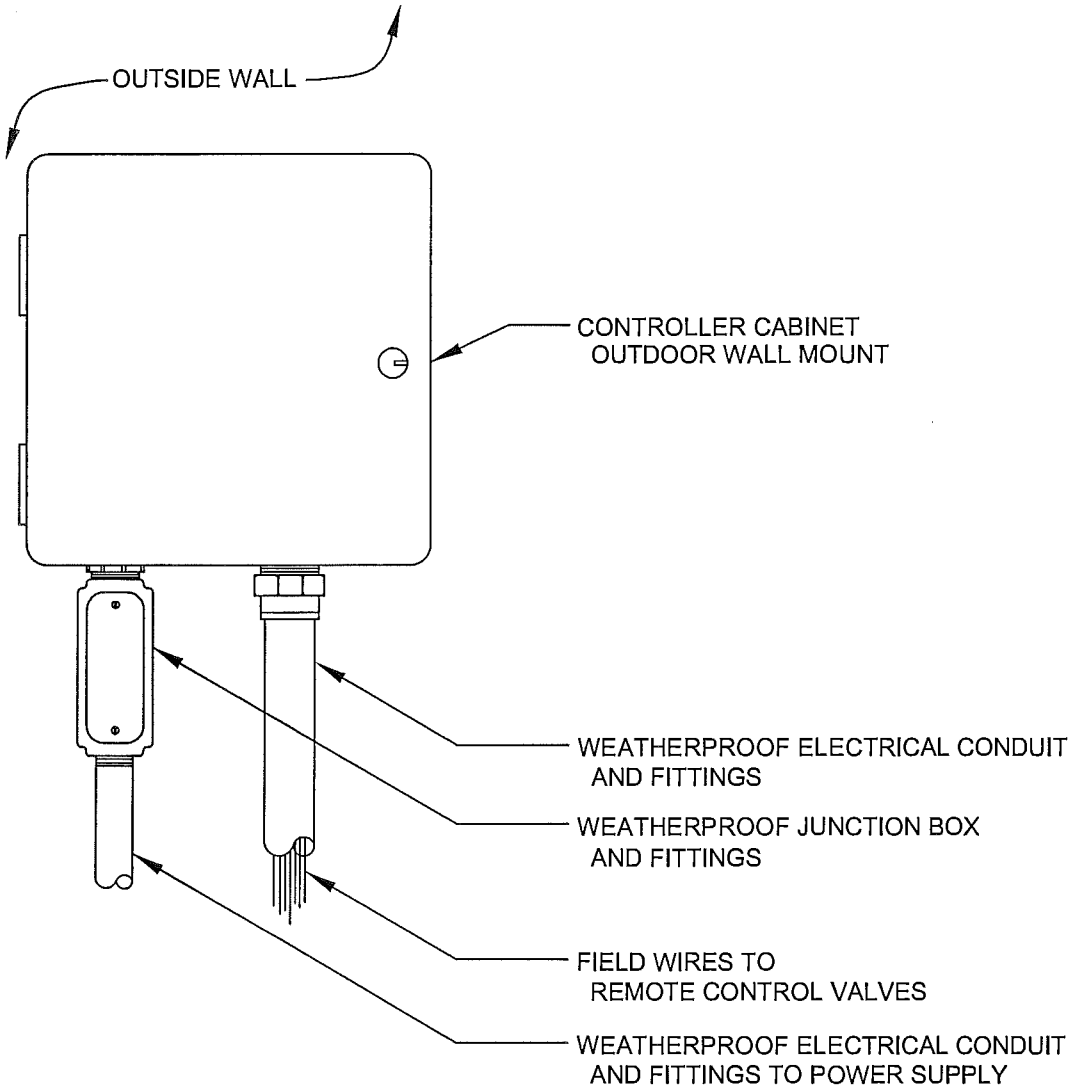

NOTE PVC SHALL NOT BE USED IN WIRING CONNECTIONS OR CONDUIT

IRRIGATION DETAIL IRR-03
LINE DRAWING TRANSFORMER ENCLOSURE

version: 01, revision: 00, date: 8/2006

DALE WINCHESTER &
ASSOCIATES
2215 East Pincrest Lane
Sandy UT 84092
801 571-6060

SOUTH JORDAN CITY
PARKS DEPARTMENT
1600 West Towne Center Drive
South Jordan, Utah 84095
(801) 254-3742

SOUTH JORDAN

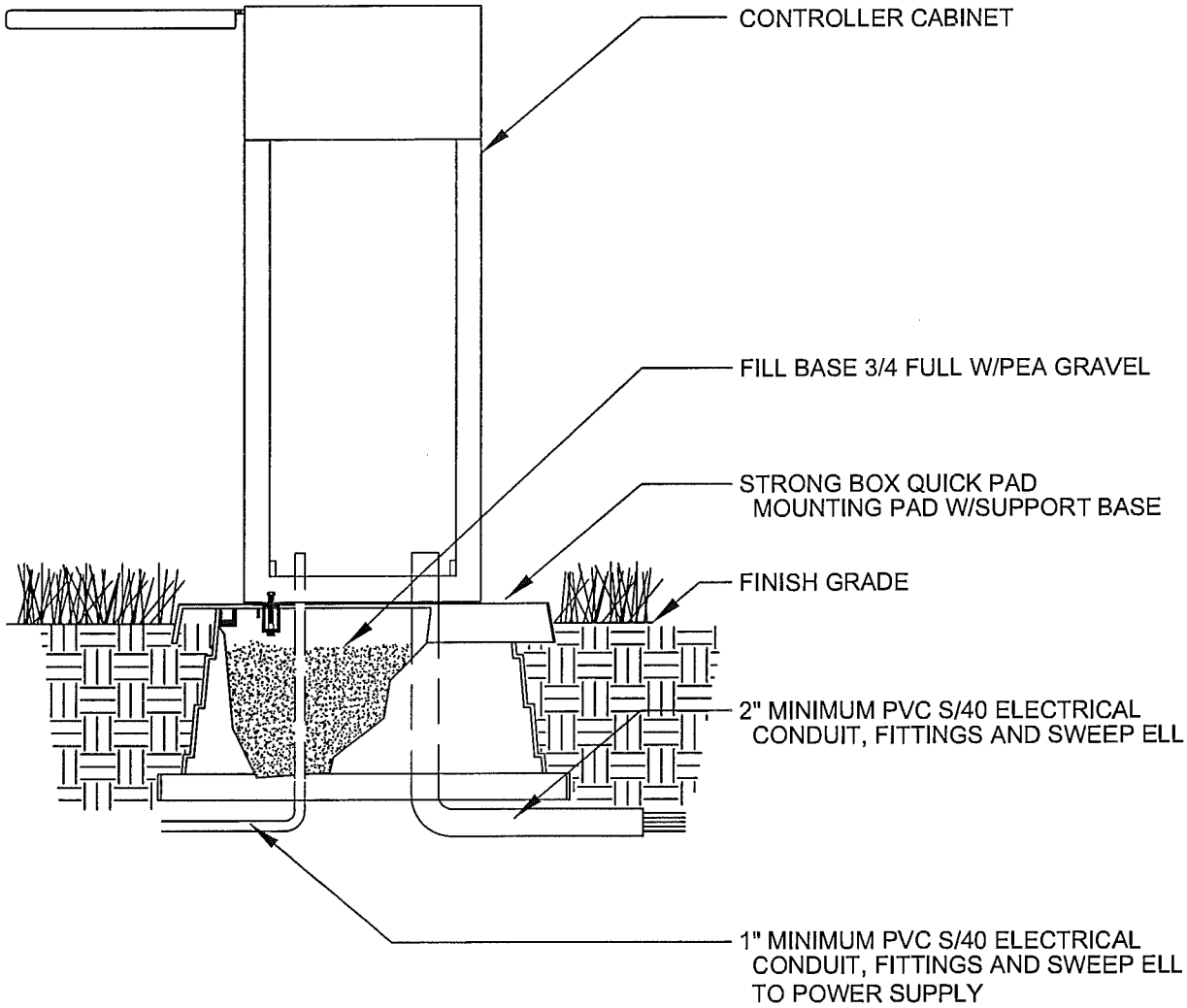

NOTE: INSTALL PAIGE WIRE GROUNDING GRID PER MFG. REQUIREMENTS

IRRIGATION DETAIL IRR-04
PEDESTAL MOUNT
CONTROLLER

version: 01, revision: 00, date: 8/2006

DALE WINCHESTER &
ASSOCIATES
2215 East Pincrest Lane
Sandy UT 84092
801 571-6060

SOUTH JORDAN CITY
PARKS DEPARTMENT
1600 West Towne Center Drive
South Jordan, Utah 84095
(801) 254-3742

SOUTH JORDAN

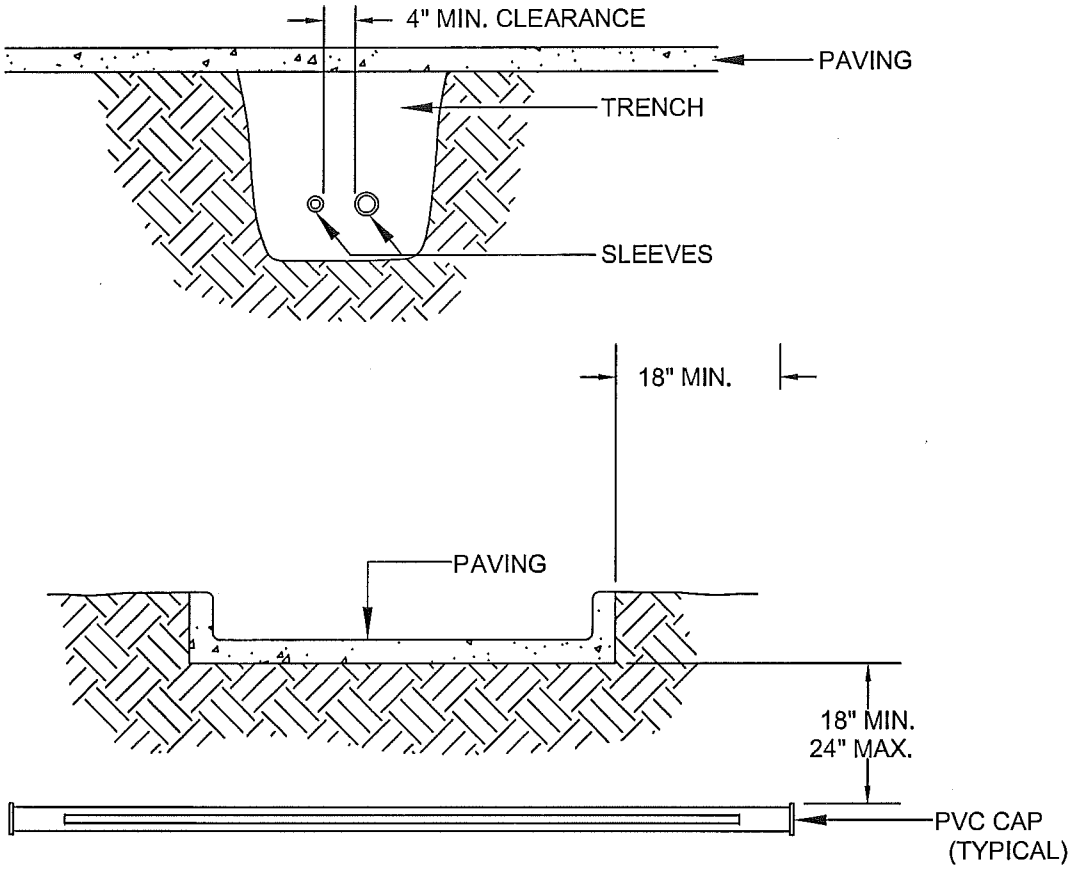

NOTES:
1. SLEEVES UNDER ROADS TO BE DUCTILE IRON IF CODE DIRECTS, OTHERWISE PVC.
2. ALL JOINTS (EXCEPT DUCTILE IRON) TO BE SOLVENT WELDED AND WATERTIGHT.
3. WHERE THERE IS MORE THAN ONE SLEEVE, PLACE THEM PARALLEL IN TRENCH. DO NOT PLACE ON TOP OF EACH OTHER.
4. MECHANICALLY TAMP TO 95% PROCTOR.

IRRIGATION DETAIL IRR-05
SLEEVING

version: 01, revision: 00, date: 8/2006

DALE WINCHESTER &
ASSOCIATES
2215 East Pincrest Lane
Sandy UT 84092
801 571-6060

SOUTH JORDAN CITY
PARKS DEPARTMENT
1600 West Towne Center Drive
South Jordan, Utah 84095
(801) 254-3742

SOUTH JORDAN

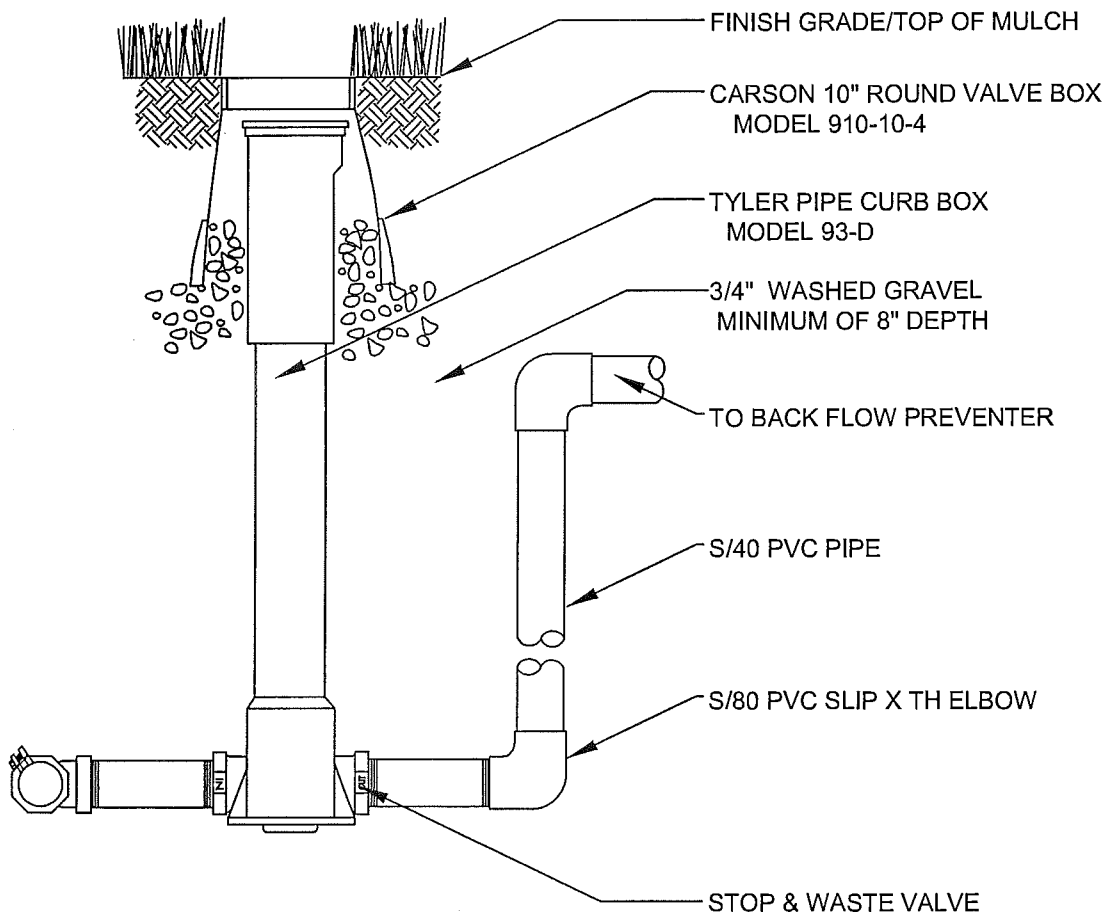

1. USE MUELLER ORISEAL MODEL H-102-88 VALVE WITH THREADED TOP.
   HARD PIPE TO SURFACE WITH PIPE AND FITTINGS AS NEEDED.
2. USE USE PACK JOINT TEE, SADDLE, OR PACK JOINT F. A. TO CONNECT ON TO SUPPLY LINE
   USE MINIMUM 6" BRASS NIPPLES ON EITHER SIDE OF STOP & WASTE VALVE

IRRIGATION DETAIL IRR-06
STOP & WASTE VALVE

version: 01, revision: 00, date: 8/2006

DALE WINCHESTER &
ASSOCIATES
2215 East Pincrest Lane
Sandy UT 84092
801 571-6060

SOUTH JORDAN CITY
PARKS DEPARTMENT
1600 West Towne Center Drive
South Jordan, Utah 84095
(801) 254-3742

SOUTH JORDAN

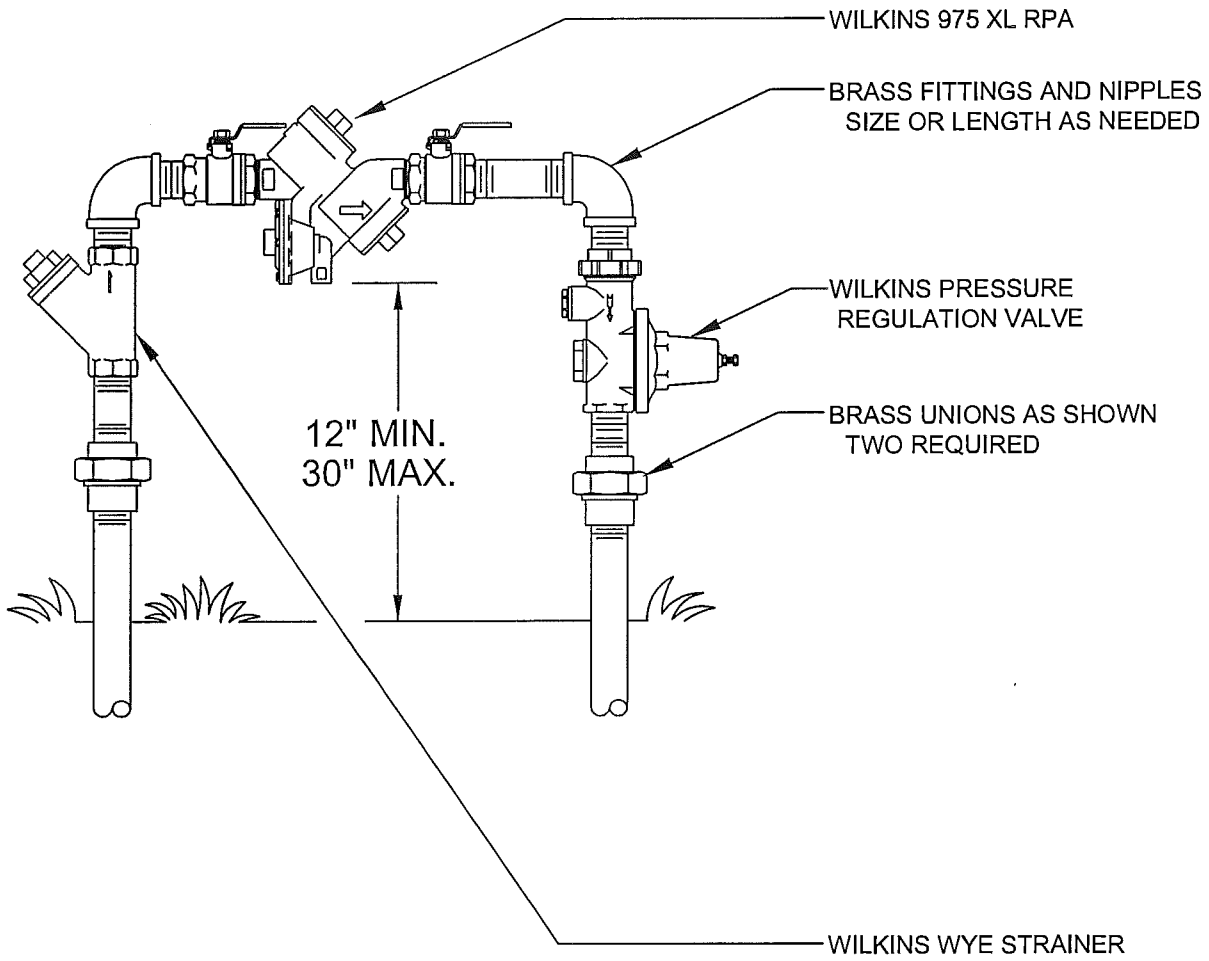

1. LOCATE BACKFLOW DEVICE IN INCONSPICUOUS AREA IF POSSIBLE.
2. ALL PIPE, FITTINGS AND COMPONENTS SHALL BE BRASS.

IRRIGATION DETAIL IRR-07
BACKFLOW RPA

version: 01, revision: 00, date: 8/2006

DALE WINCHESTER &
ASSOCIATES
2215 East Pincrest Lane
Sandy UT 84092
801 571-6060

SOUTH JORDAN CITY
PARKS DEPARTMENT
1600 West Towne Center Drive
South Jordan, Utah 84095
(801) 254-3742

SOUTH JORDAN

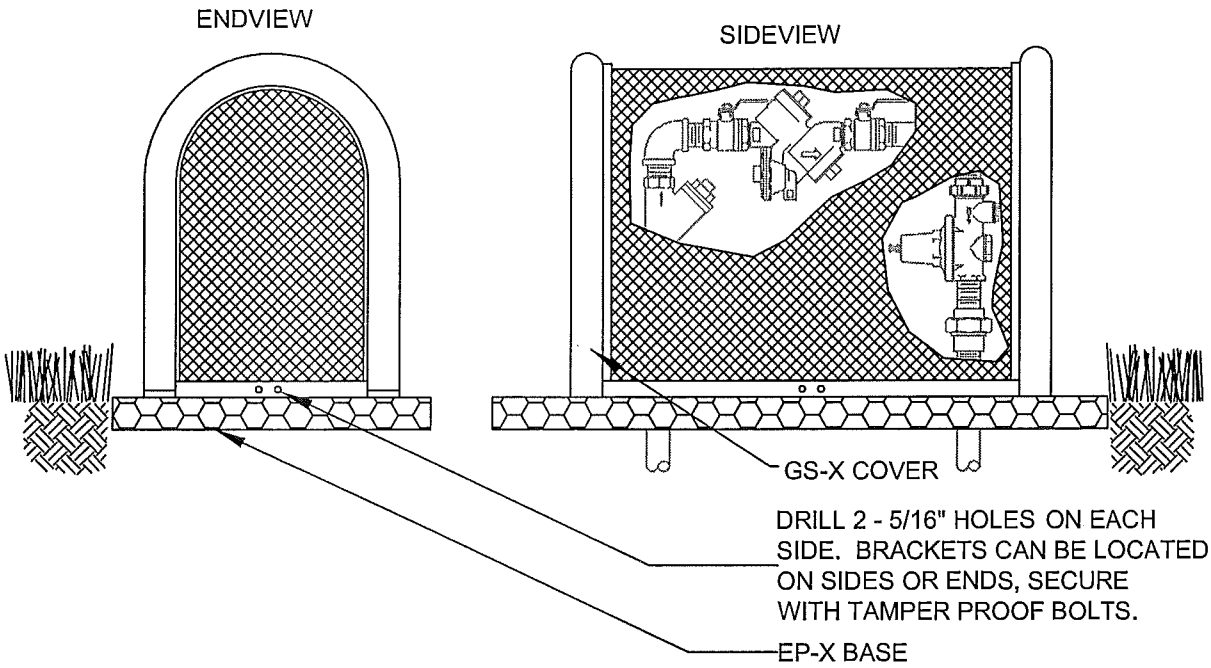

1. USE BPDI BRAND 'GUARDSHACK', MODEL GS-X, WITH FOREST GREEN POWDER COATING. INSTALL TO MANUFACTURERS RECOMMENDATION.
2. USE BPDI BRAND 'ENCPAD' EP-X, PLASTIC BASE WITH 'PADLOK' ANCHOR HARDWARE. INSTALL TO MANUFACTURERS RECOMMENDATION.

IRRIGATION DETAIL IRR-08
BACKFLOW COVER

version: 01, revision: 00, date: 8/2006

DALE WINCHESTER & ASSOCIATES
2215 East Pincrest Lane
Sandy UT 84092
801 571-6060

SOUTH JORDAN CITY
PARKS DEPARTMENT
1600 West Towne Center Drive
South Jordan, Utah 84095
(801) 254-3742

SOUTH JORDAN

SECTION VIEW

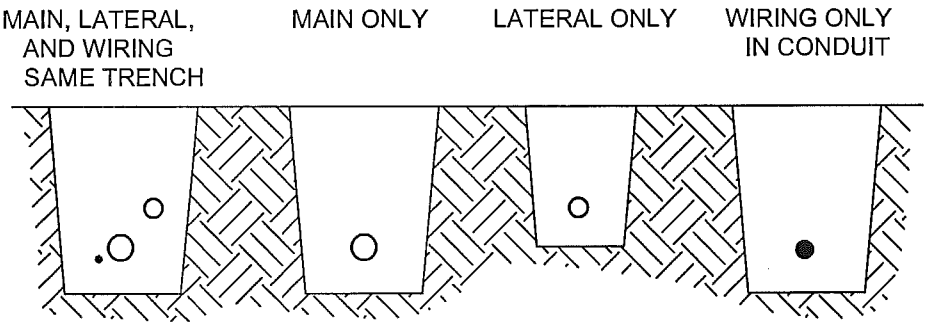

PLAN VIEW

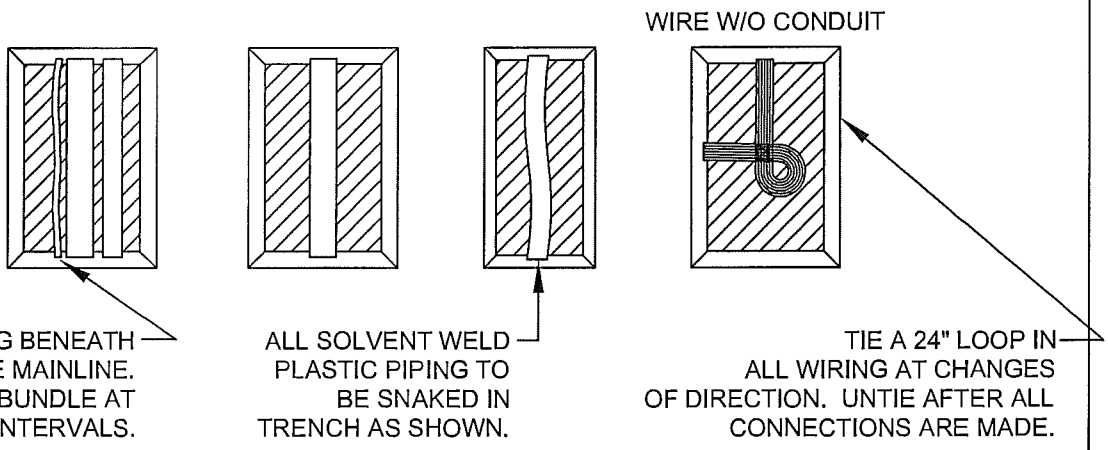

NOTES:

1. SLEEVES SHALL BE TWICE THE DIAMETER OF THE PIPE WITHIN.
2. SLEEVING SIZES 2" THROUGH 4" SHALL BE S/40 SOLVENT WELD. 6" AND ABOVE SHALL BE CL 200 GASKETED.
3. PIPE AND WIRE SHALL BE PLACED IN SEPARATE SLEEVES.
4. MAIN LINE SHALL HAVE 18" MIN. COVER, LATERAL LINE SHALL HAVE 12" MIN. COVER.

IRRIGATION DETAIL IRR-09
PIPE & WIRE TRENCH

version: 01, revision: 00, date: 8/2006

DALE WINCHESTER & ASSOCIATES
2215 East Pincrest Lane
Sandy UT 84092
801 571-6060

SOUTH JORDAN CITY
PARKS DEPARTMENT
1600 West Towne Center Drive
South Jordan, Utah 84095
(801) 254-3742

SOUTH JORDAN

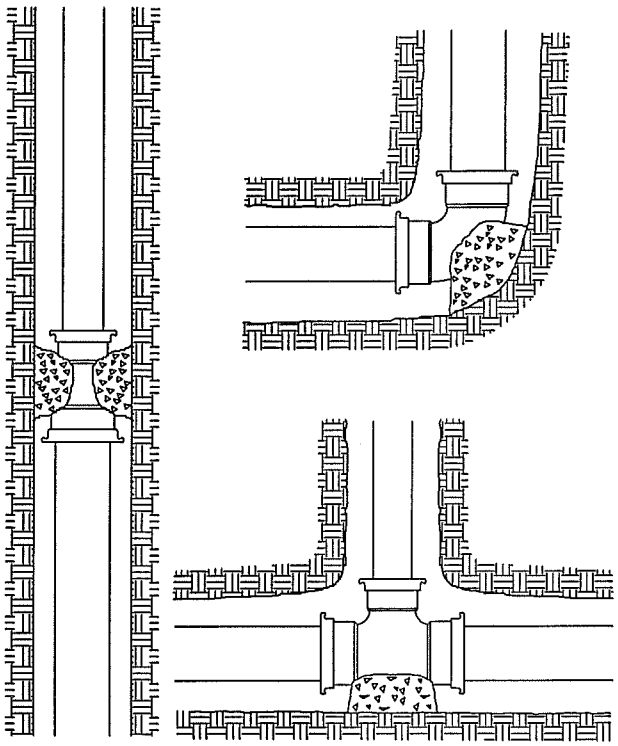

TABLE 1

SIZE	TEES PLUGS	90° BEND	45° BEND	22.5° BEND
2"	363	513	259	141
2 1/2"	531	751	379	207
3"	788	1,114	562	307
4"	1,302	1,841	928	508
6"	2,822	3,990	2,012	1,101
8"	4,783	6,763	3,410	1,865
10"	7,430	10,506	5,297	2,898
12"	10,452	14,778	7,452	4,076

FOR REDUCERS, SUBTRACT SMALL OPENING PLUG THRUST FROM LARGE OPENING PLUG THRUST TO CALCULATE THRUST / 100.

TABLE 2

SOIL TYPE	SAFE BEARING LOAD LBS PER SQ FT*
SOFT CLAY	1,000
SAND	2,000
SAND & GRAVEL	3,000
SAND & GRAVEL CEMENTED W/CLAY	4,000
HARD PAN	10,000

*THE ABOVE BEARING LOAD DATA WAS PROVIDED BY HARCO MFG. WHEN IN DOUBT, THE CONTRACTOR SHALL CONTACT A SOILS ENGINEER AND CONTRACT FOR A SOILS BEARING, OR OTHER NECESSARY TESTS.

NOTES:

1. PROVIDE THRUST BLOCKS AT ALL CHANGES IN SIZE OR DIRECTION. BENDS, REDUCERS, PLUGS AND THE OPPOSITE SIDE OF TEE BRANCHES ALL REQUIRE THRUST BLOCKS.
2. THE SIZE OF THE THRUST BLOCK IS DETERMINED BY THE WORKING PRESSURE, THE SIZE AND TYPE OF FITTING, AND SOIL CONDITIONS AT THE JOB SITE. TO CALCULATE THE AREA OF CONTACT WITH THE SOIL, FOLLOW THESE STEPS:
   CALCULATE THE THRUST BY SELECTING THRUST / 100 BY SIZE AND TYPE OF FITTING FROM TABLE #1 AND MULTIPLYING THRUST / 100 BY SYSTEM PRESSURE / BY 100.
3. DIVIDE THE TOTAL THRUST BY BEARING CAPACITY OF THE SOIL IN EXCAVATION, (FROM TABLE #2 TO DETERMINE THE AREA IN SQUARE FEET OF THRUST BLOCK REQUIRED TO BE IN CONTACT WITH THE UNDISTURBED SOIL.

IRRIGATION DETAIL IRR-10
THRUST BLOCKING

version: 01, revision: 00, date: 8/2006

DALE WINCHESTER & ASSOCIATES
2215 East Pincrest Lane
Sandy UT 84092
801 571-6060

SOUTH JORDAN CITY
PARKS DEPARTMENT
1600 West Towne Center Drive
South Jordan, Utah 84095
(801) 254-3742

SOUTH JORDAN

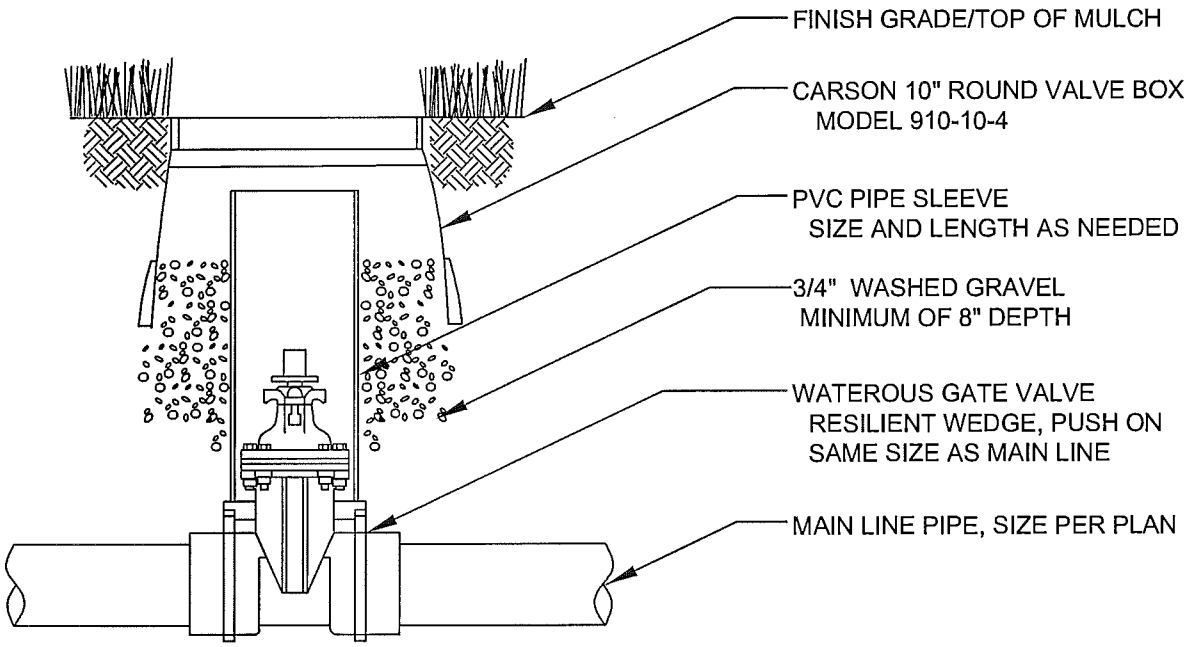

NOTES:

1. TO BE USED ON MAIN LINE PIPE 3" AND LARGER.
2. VALVE SHALL HAVE 2" SQUARE OPERATING NUT.

IRRIGATION DETAIL IRR-11
LARGE GATE VALVE

version: 01, revision: 00, date: 8/2006

DALE WINCHESTER &
ASSOCIATES
2215 East Pincrest Lane
Sandy UT 84092
801 571-6060

SOUTH JORDAN CITY
PARKS DEPARTMENT
1600 West Towne Center Drive
South Jordan, Utah 84095
(801) 254-3742

SOUTH JORDAN

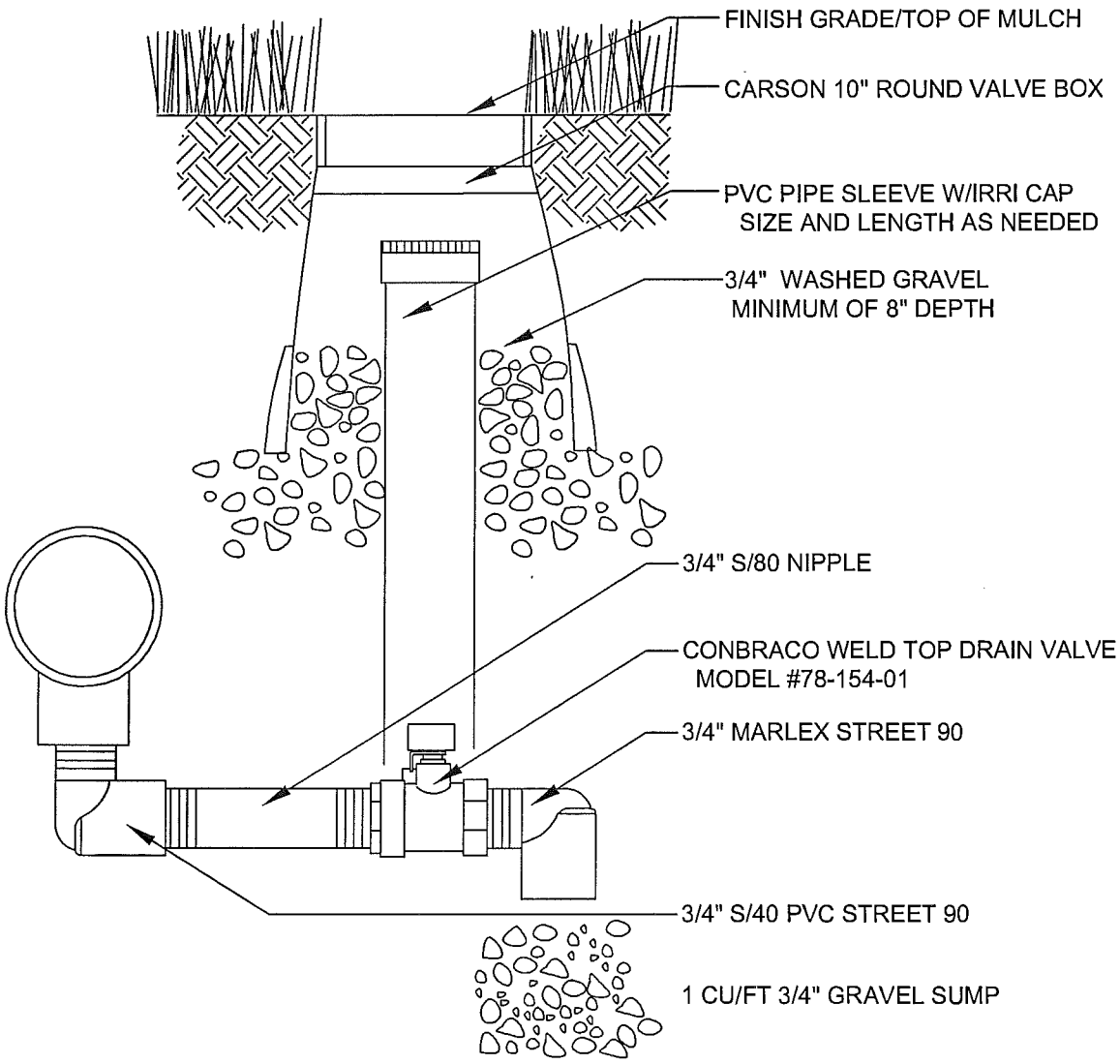

IRRIGATION DETAIL IRR-12
MANUAL DRAIN

version: 01, revision: 00, date: 8/2006

DALE WINCHESTER &
ASSOCIATES
2215 East Pincrest Lane
Sandy UT 84092
801 571-6060

SOUTH JORDAN CITY
PARKS DEPARTMENT
1600 West Towne Center Drive
South Jordan, Utah 84095
(801) 254-3742

SOUTH JORDAN

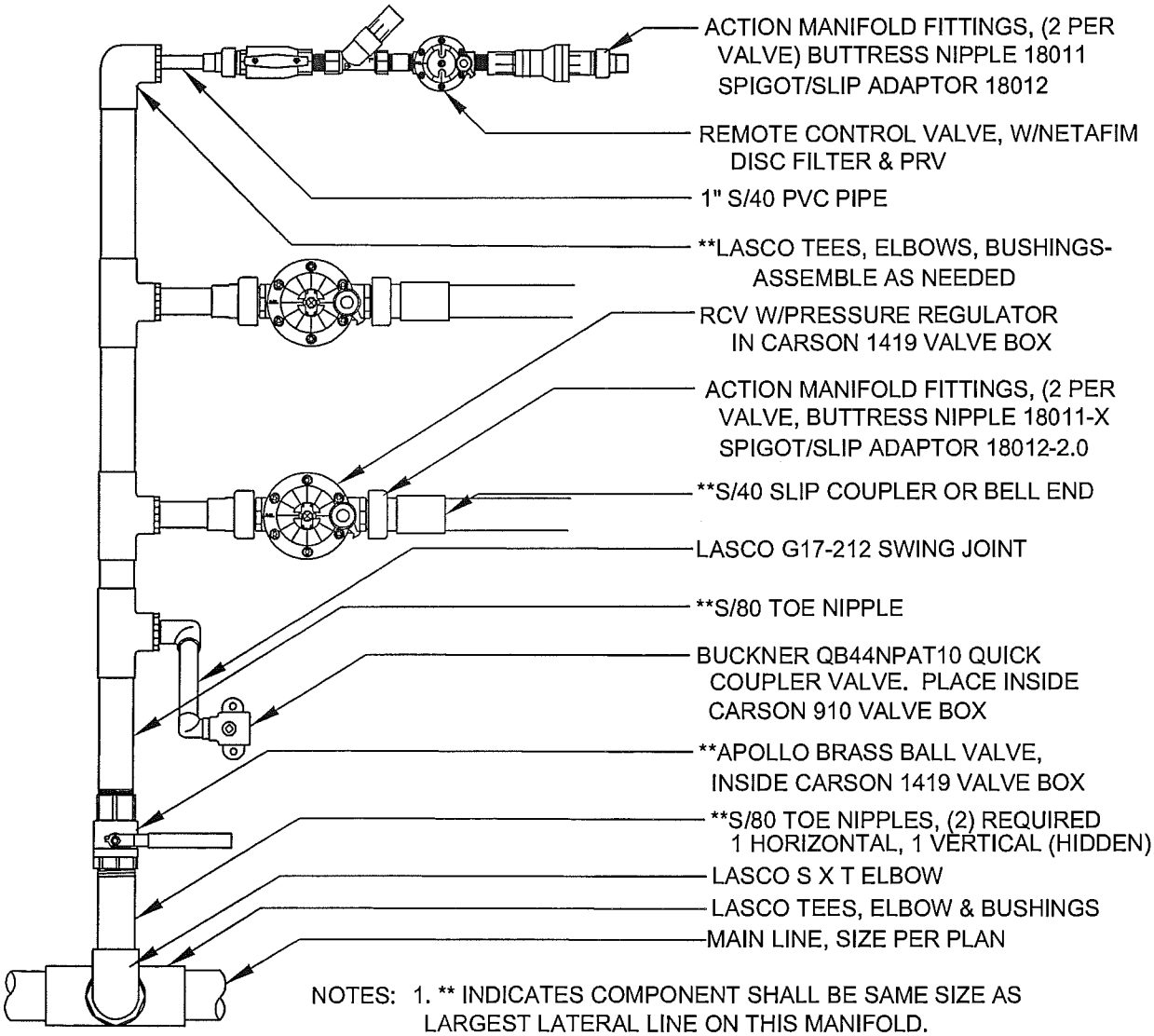

NOTES:
1. ** INDICATES COMPONENT SHALL BE SAME SIZE AS LARGEST LATERAL LINE ON THIS MANIFOLD.
2. DOWNSTREAM OF BALL VALVE: MANIFOLD FITTINGS SHALL BE S/80, PVC PIPE SHALL BE S/40.
3. LAY BALL VALVE ON SIDE. HANDLE VERTICAL IS OFF.

IRRIGATION DETAIL IRR-13
CONTROL VALVE MANIFOLD SCH-80

version: 01, revision: 00, date: 8/2006

DALE WINCHESTER & ASSOCIATES
2215 East Pincrest Lane
Sandy UT 84092
801 571-6060

SOUTH JORDAN CITY
PARKS DEPARTMENT
1600 West Towne Center Drive
South Jordan, Utah 84095
(801) 254-3742

SOUTH JORDAN

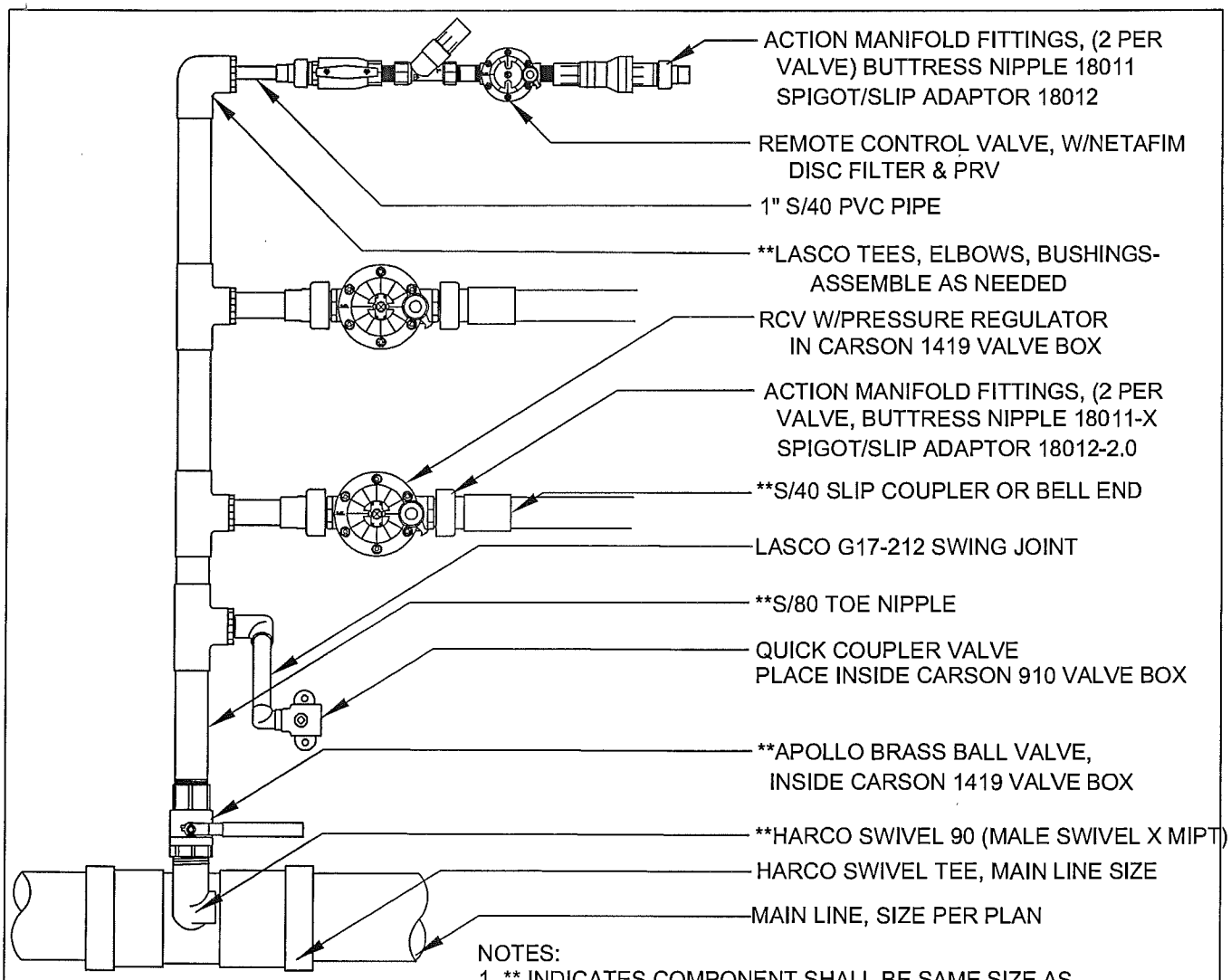

NOTES:
1. ** INDICATES COMPONENT SHALL BE SAME SIZE AS LARGEST LATERAL LINE ON THIS MANIFOLD.
2. DOWNSTREAM OF BALL VALVE: MANIFOLD FITTINGS SHALL BE S/80, PVC PIPE SHALL BE S/40.

IRRIGATION DETAIL IRR-14
CONTROL VALVE MANIFOLD HARCO

version: 01, revision: 00, date: 8/2006

DALE WINCHESTER & ASSOCIATES
2215 East Pincrest Lane
Sandy UT 84092
801 571-6060

SOUTH JORDAN CITY
PARKS DEPARTMENT
1600 West Towne Center Drive
South Jordan, Utah 84095
(801) 254-3742

SOUTH JORDAN

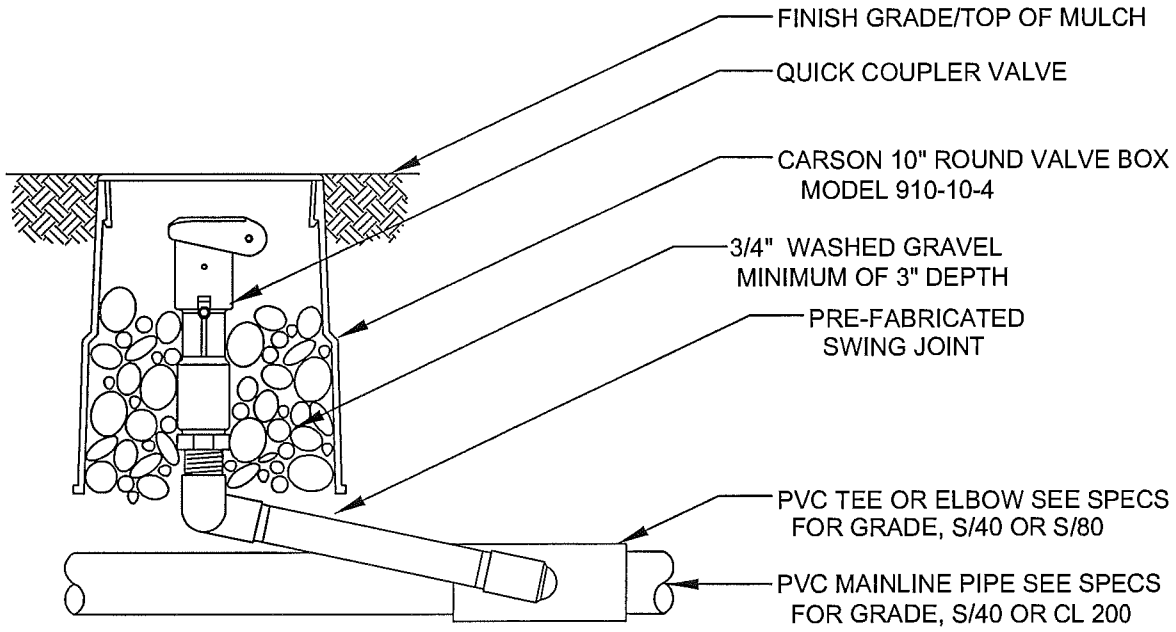

NOTES:

1. ACME O-RING SEALED THREADS ARE TO BE FINGER TIGHTENED AND THEN BACKED OFF ONE FULL ROTATION PRIOR TO INSTALLATION.
2. SWING JOINT LAY ARM SHALL BE INSTALLED AT ANGLE, BETWEEN 30 AND 45 DEGREES TO THE MAIN LINE PIPE.
3. SWING JOINT SHALL BE PRE-FABRICATED LASCO MODEL G17S-212

IRRIGATION DETAIL IRR-15
QUICK COUPLER VALVE

version: 01, revision: 00, date: 8/2006

DALE WINCHESTER &
ASSOCIATES
2215 East Pincrest Lane
Sandy UT 84092
801 571-6060

SOUTH JORDAN CITY
PARKS DEPARTMENT
1600 West Towne Center Drive
South Jordan, Utah 84095
(801) 254-3742

SOUTH JORDAN

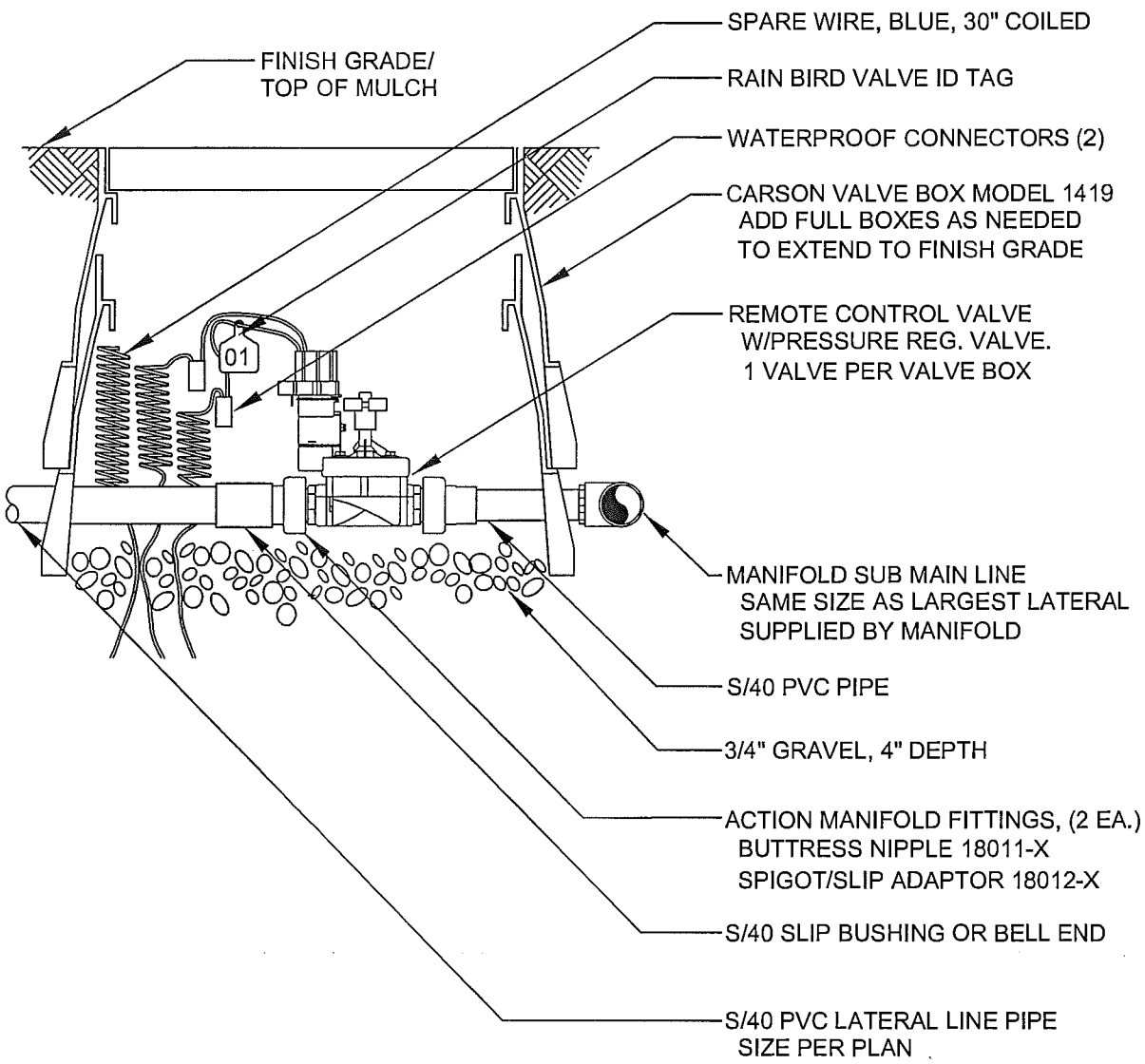

IRRIGATION DETAIL IRR-16
REMOTE CONTROL VALVE

version: 01, revision: 00, date: 8/2006

DALE WINCHESTER &
ASSOCIATES
2215 East Pincrest Lane
Sandy UT 84092
801 571-6060

SOUTH JORDAN CITY
PARKS DEPARTMENT
1600 West Towne Center Drive
South Jordan, Utah 84095
(801) 254-3742

SOUTH JORDAN

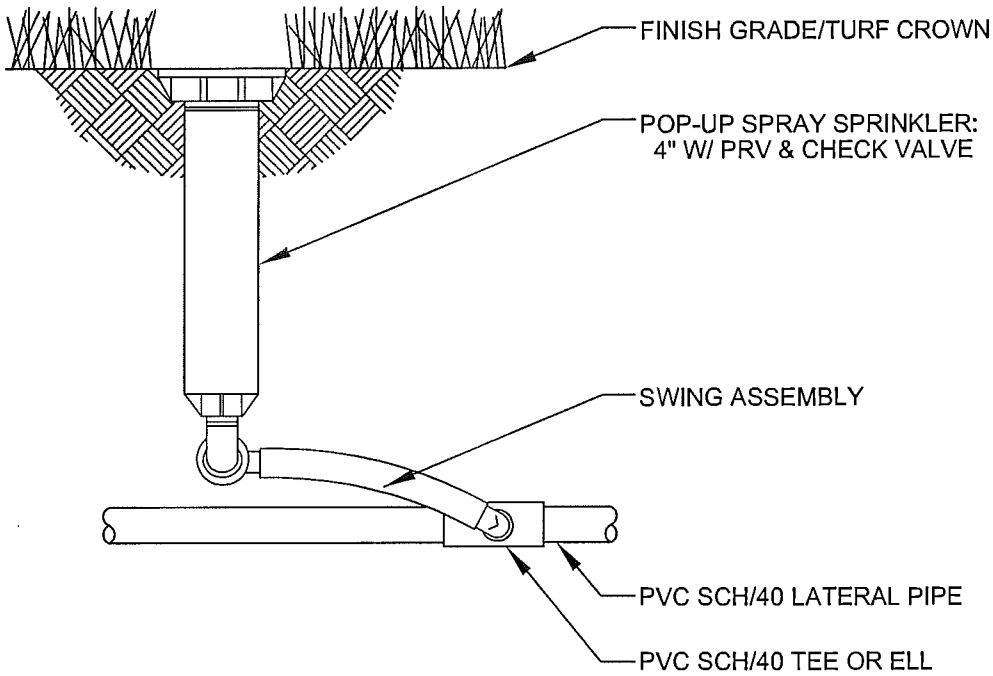

NOTES:

1. SWING JOINT ASSEMBLY: TWO SPIRAL BARB ELBOWS, 12-24" SWING PIPE, AND ONE 1/2" MARLEX STREET ELBOW.
2. USE FIXED SPRAY NOZZLES WHEREVER POSSIBLE.

IRRIGATION DETAIL IRR-17
4" POP-UP SPRAY HEAD

version: 01, revision: 00, date: 8/2006

DALE WINCHESTER &
ASSOCIATES
2215 East Pincrest Lane
Sandy UT 84092
801 571-6060

SOUTH JORDAN CITY
PARKS DEPARTMENT
1600 West Towne Center Drive
South Jordan, Utah 84095
(801) 254-3742

SOUTH JORDAN

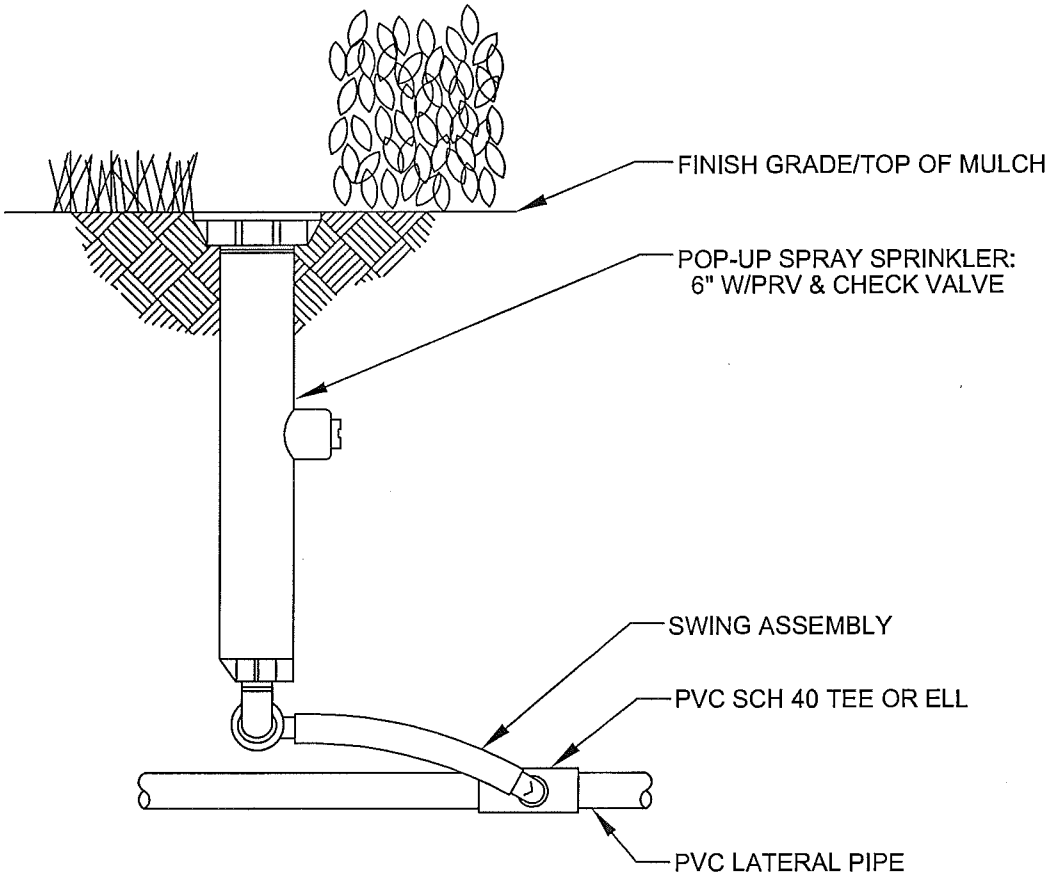

NOTES:

1. SWING JOINT ASSEMBLY: TWO SPIRAL BARB ELBOWS, 12-24" SWING PIPE, AND ONE 1/2" MARLEX STREET ELBOW.
2. USE FIXED SPRAY NOZZLES WHEREVER POSSIBLE.

IRRIGATION DETAIL IRR-18
6" POP-UP SPRAY HEAD

version: 01, revision: 00, date: 8/2006

DALE WINCHESTER &
ASSOCIATES
2215 East Pincrest Lane
Sandy UT 84092
801 571-6060

SOUTH JORDAN CITY
PARKS DEPARTMENT
1600 West Towne Center Drive
South Jordan, Utah 84095
(801) 254-3742

SOUTH JORDAN

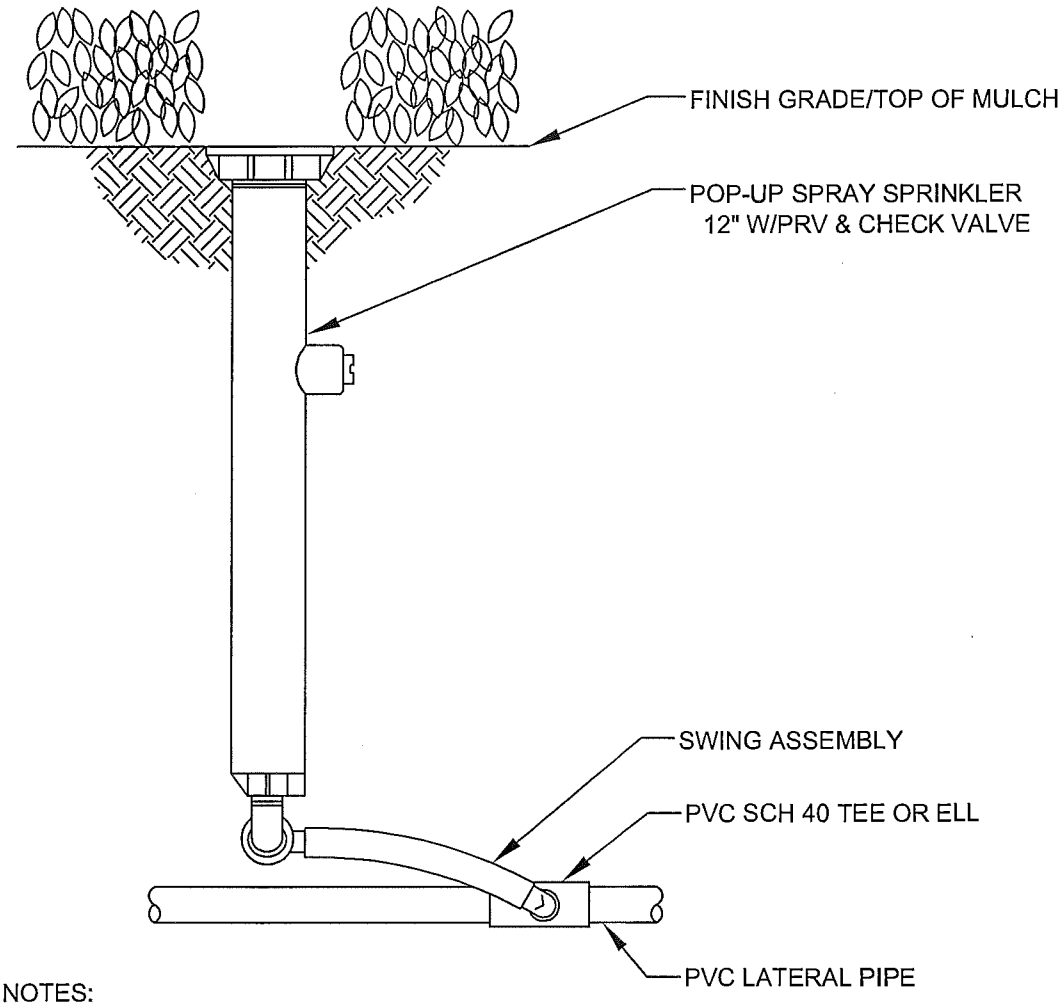

NOTES:

1. SWING JOINT ASSEMBLY: TWO SPIRAL BARB ELBOWS, 12-24" SWING PIPE, AND ONE 1/2" MARLEX STREET ELBOW.
2. USE FIXED SPRAY NOZZLES WHEREVER POSSIBLE.

IRRIGATION DETAIL IRR-19
12" POP-UP SPRAY HEAD

version: 01, revision: 00, date: 8/2006

DALE WINCHESTER &
ASSOCIATES
2215 East Pincrest Lane
Sandy UT 84092
801 571-6060

SOUTH JORDAN CITY
PARKS DEPARTMENT
1600 West Towne Center Drive
South Jordan, Utah 84095
(801) 254-3742

SOUTH JORDAN

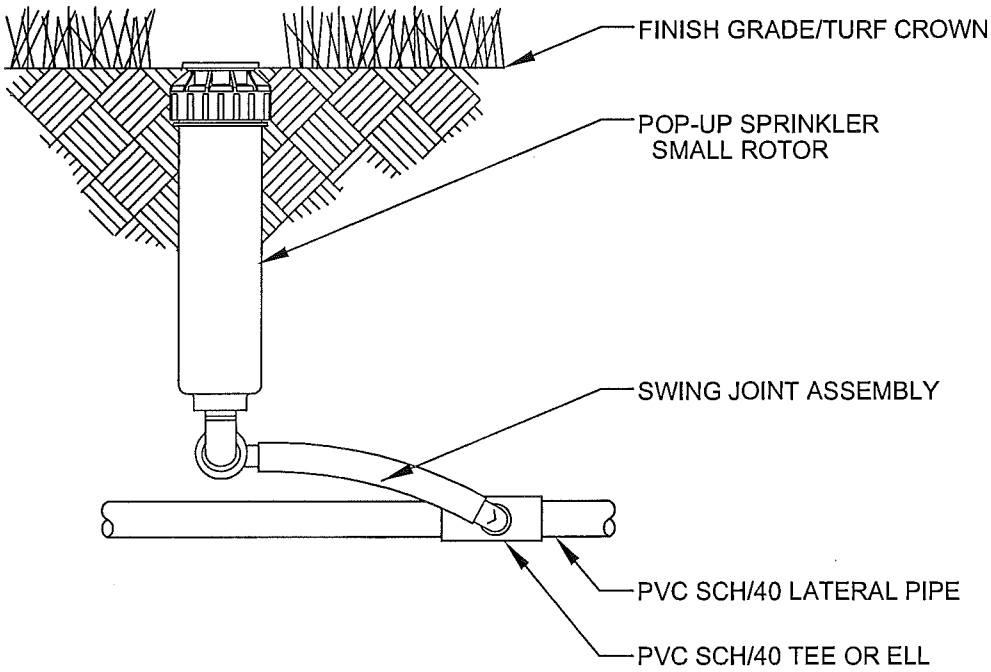

NOTES:

1. SWING JOINT JOINT ASSEMBLY: TWO SPIRAL BARB ELBOWS, SBE-050, 12-24" SWING PIPE, AND ONE 1/2" MARLEX STREET ELBOW.
2. USE NOZZLE SPECIFIED ON PLAN.

IRRIGATION DETAIL IRR-20
SMALL ROTOR HEAD

version: 01, revision: 00, date: 8/2006

DALE WINCHESTER &
ASSOCIATES
2215 East Pincrest Lane
Sandy UT 84092
801 571-6060

SOUTH JORDAN CITY
PARKS DEPARTMENT
1600 West Towne Center Drive
South Jordan, Utah 84095
(801) 254-3742

SOUTH JORDAN

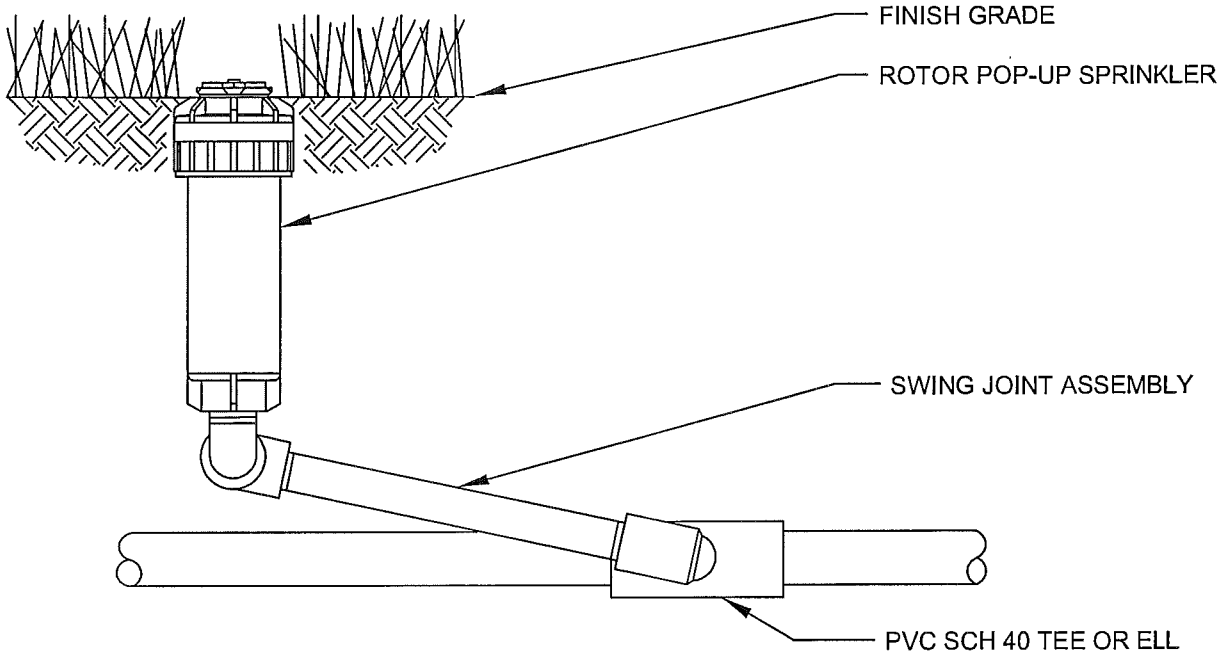

NOTES:

1. POSITION LAY ARM OF SWING JOINT 30 TO 45 DEGREES FROM LATERAL PIPE.
2. INSTALL NOZZLE AS INDICATED ON PLAN. USE BOTTOM INLET ONLY.
3. FOR SWING JOINT, USE 3 MARLEX STREET ELBOWS AND 1 S/80 12" NIPPLE .

IRRIGATION DETAIL IRR-21
MEDIUM ROTOR HEAD

version: 01, revision: 00, date: 8/2006

DALE WINCHESTER &
ASSOCIATES
2215 East Pincrest Lane
Sandy UT 84092
801 571-6060

SOUTH JORDAN CITY
PARKS DEPARTMENT
1600 West Towne Center Drive
South Jordan, Utah 84095
(801) 254-3742

SOUTH JORDAN

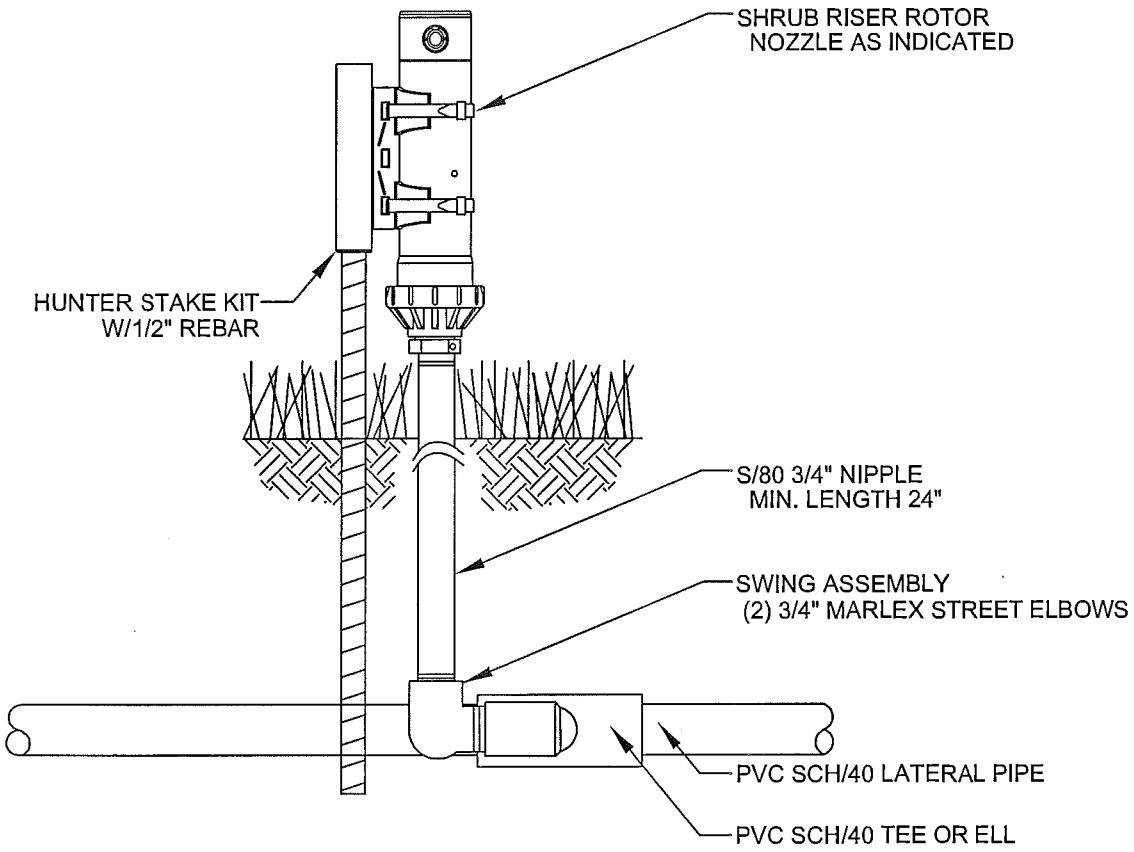

NOTES:

1. INSTALL 1/2" REBAR ROD SUFFICIENT TO PREVENT ROTOR MOVEMENT.
2. INSTALL STAKE KIT AS SHOWN W/CABLE TIES.
3. INSTALL 3/4 X 24 S/80 NIPPLE. EXTEND LENGHTH AS NEEDED.

IRRIGATION DETAIL IRR-22
MEDIUM ROTOR SHRUB RISER

version: 01, revision: 00, date: 8/2006

DALE WINCHESTER &
ASSOCIATES
2215 East Pincrest Lane
Sandy UT 84092
801 571-6060

SOUTH JORDAN CITY
PARKS DEPARTMENT
1600 West Towne Center Drive
South Jordan, Utah 84095
(801) 254-3742

SOUTH JORDAN

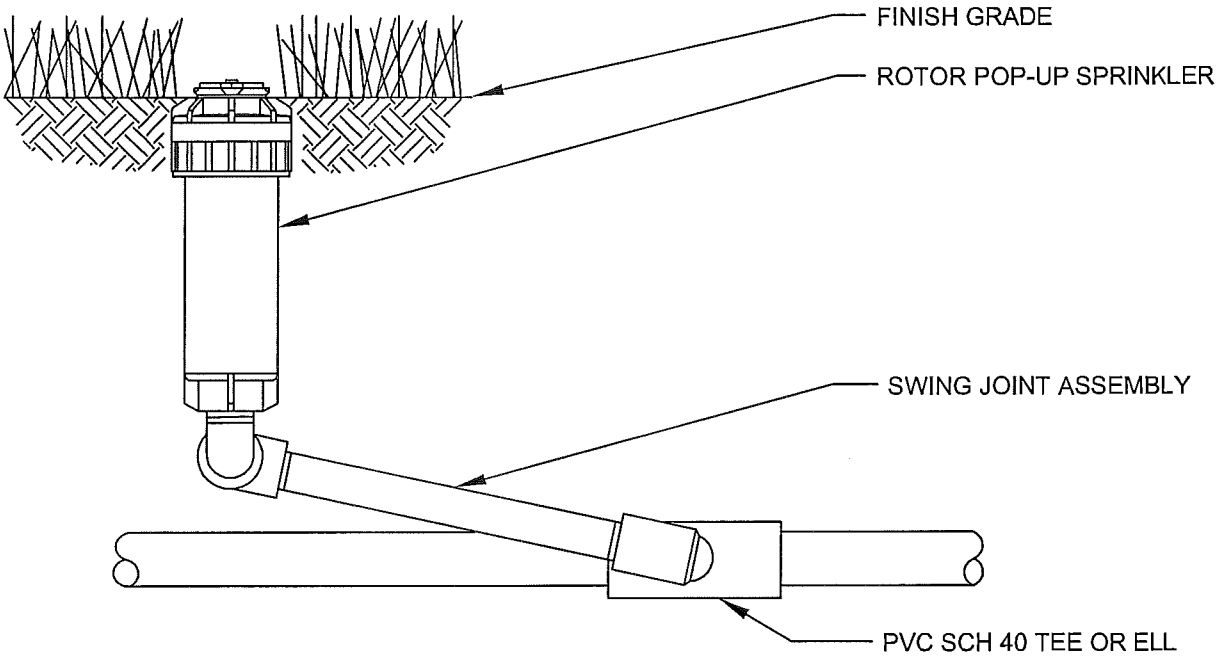

NOTES:

1. POSITION LAY ARM OF SWING JOINT 30 TO 45 DEGREES FROM LATERAL PIPE.
2. INSTALL NOZZLE AS INDICATED ON PLAN. USE BOTTOM INLET ONLY.
3. FOR SWING JOINT, USE MFG PRE-FABRICATED SWING JOINT ASSEMBLY.

IRRIGATION DETAIL IRR-23
SPORTS TURF HEAD

version: 01, revision: 00, date: 8/2006

DALE WINCHESTER &
ASSOCIATES
2215 East Pincrest Lane
Sandy UT 84092
801 571-6060

SOUTH JORDAN CITY
PARKS DEPARTMENT
1600 West Towne Center Drive
South Jordan, Utah 84095
(801) 254-3742

SOUTH JORDAN

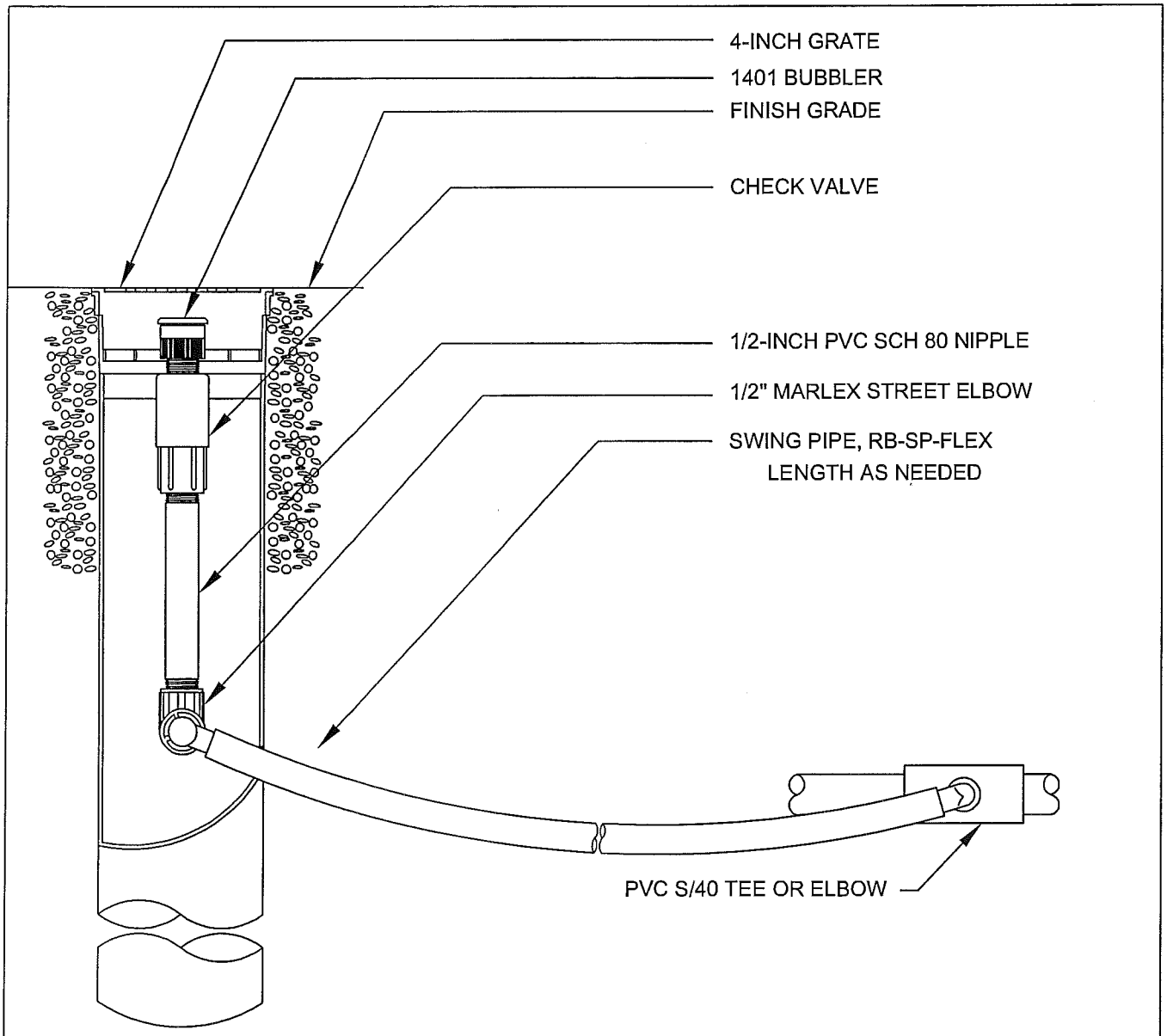

IRRIGATION DETAIL IRR-24
TREE WATERING SYSTEM

version: 01, revision: 00, date: 8/2006

DALE WINCHESTER &
ASSOCIATES
2215 East Pincrest Lane
Sandy UT 84092
801 571-6060

SOUTH JORDAN CITY
PARKS DEPARTMENT
1600 West Towne Center Drive
South Jordan, Utah 84095
(801) 254-3742

SOUTH JORDAN

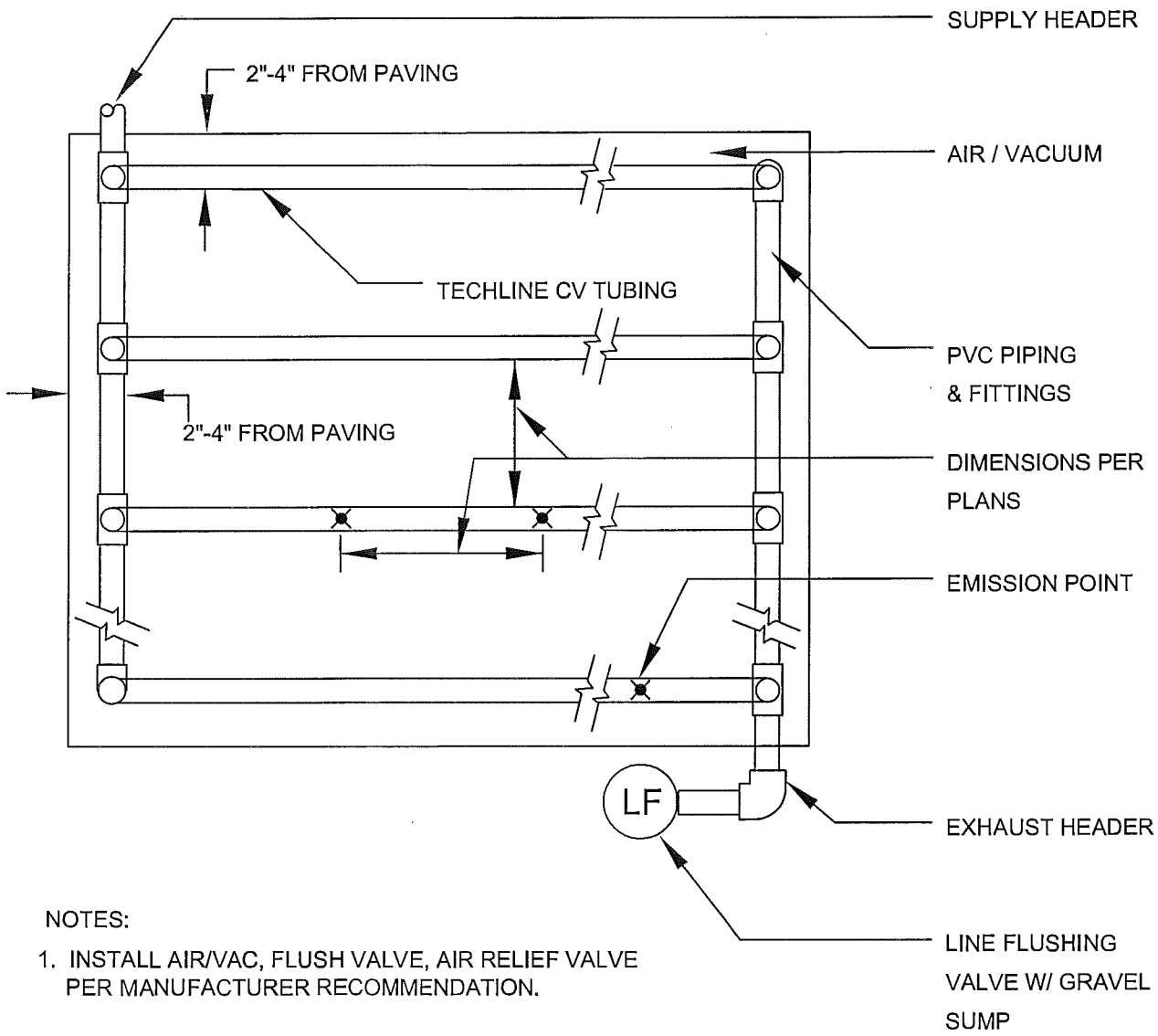

NOTES:

1. INSTALL AIR/VAC, FLUSH VALVE, AIR RELIEF VALVE PER MANUFACTURER RECOMMENDATION.

IRRIGATION DETAIL IRR-25
IN LINE DRIP GRID LAYOUT

version: 01, revision: 00, date: 8/2006

DALE WINCHESTER &
ASSOCIATES
2215 East Pincrest Lane
Sandy UT 84092
801 571-6060

SOUTH JORDAN CITY
PARKS DEPARTMENT
1600 West Towne Center Drive
South Jordan, Utah 84095
(801) 254-3742

SOUTH JORDAN

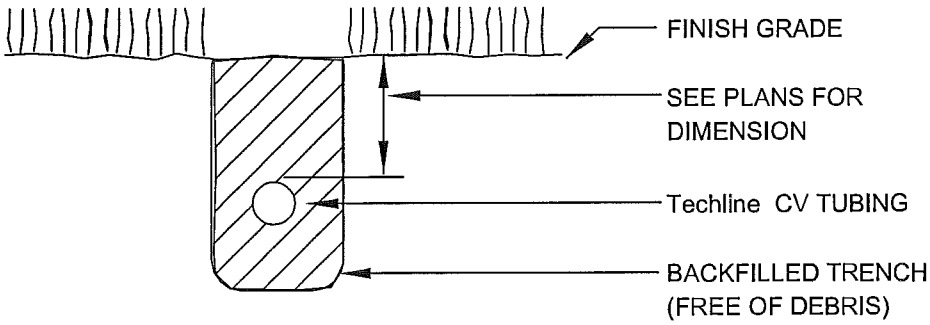

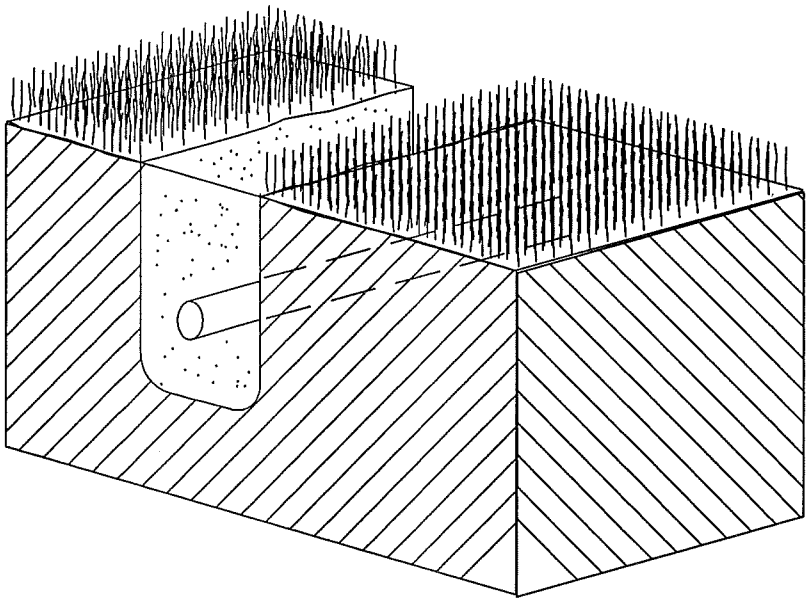

NOTES:

1. INSTALL AIR/VAC, FLUSH VALVE, AIR RELIEF VALVE PER MANUFACTURER RECOMMENDATION.

IRRIGATION DETAIL IRR-26
DRIP SUB SURFACE TURF

version: 01, revision: 00, date: 8/2006

DALE WINCHESTER & ASSOCIATES
2215 East Pincrest Lane
Sandy UT 84092
801 571-6060

SOUTH JORDAN CITY
PARKS DEPARTMENT
1600 West Towne Center Drive
South Jordan, Utah 84095
(801) 254-3742

SOUTH JORDAN

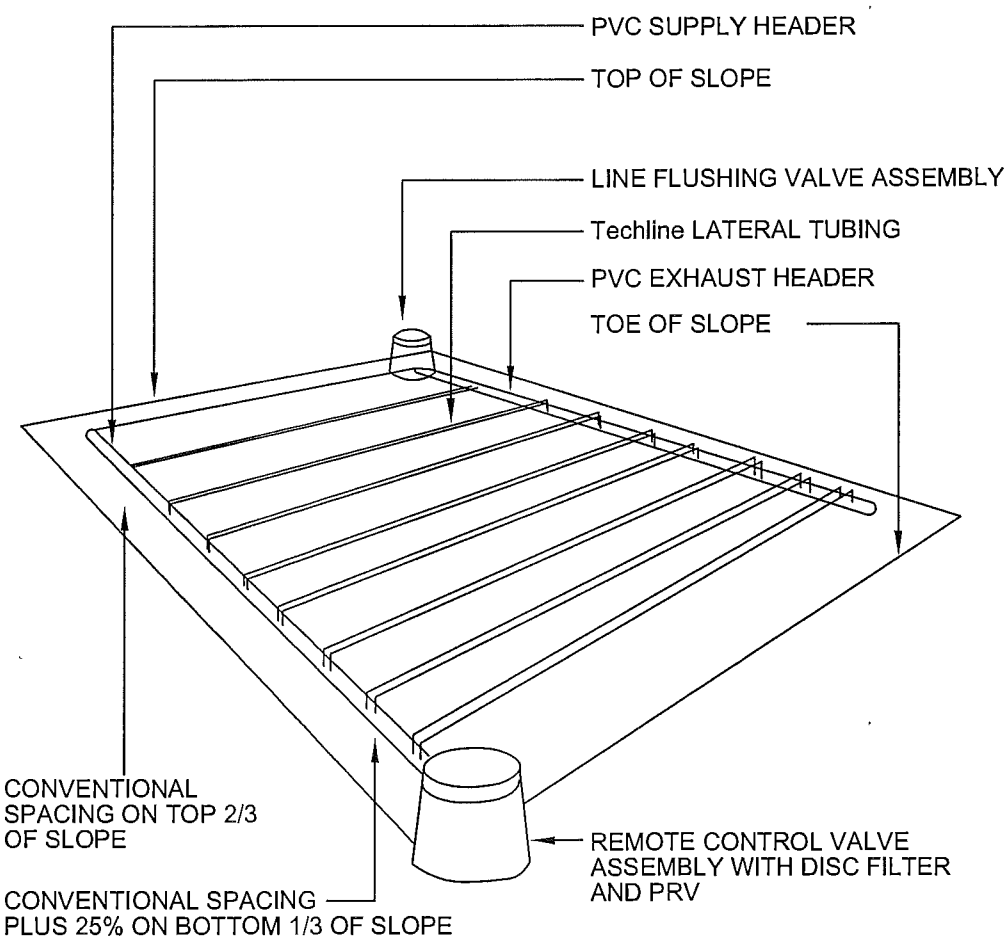

NOTE:
ALIGN Techline LATERALS PARRALLEL TO THE CONTOURS OF THE SLOPE

IRRIGATION DETAIL IRR-27
DRIP ON SLOPE

version: 01, revision: 00, date: 8/2006

DALE WINCHESTER & ASSOCIATES
2215 East Pincrest Lane
Sandy UT 84092
801 571-6060

SOUTH JORDAN CITY
PARKS DEPARTMENT
1600 West Towne Center Drive
South Jordan, Utah 84095
(801) 254-3742

SOUTH JORDAN

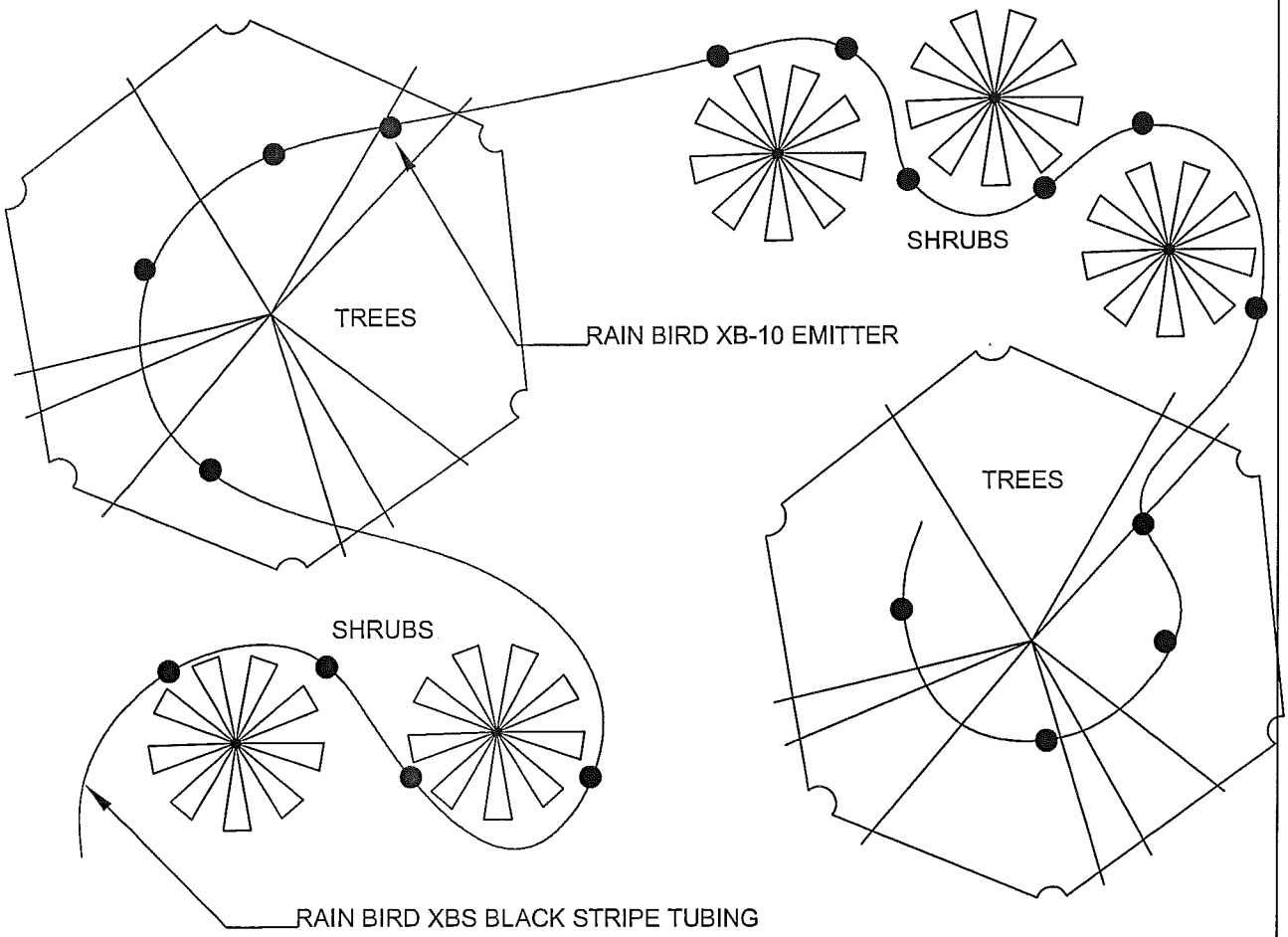

LOCATE EMITTERS ON UPHILL SIDE OF SHRUBS. ON
ON SLOPES PROVIDE WATER RETENTION BASIN
AROUND PLANT TO ALLOW WATER TO POOL

IRRIGATION DETAIL IRR-28
DRIP POINT SOURCE EMITTER

version: 01, revision: 00, date: 8/2006

DALE WINCHESTER &
ASSOCIATES
2215 East Pincrest Lane
Sandy UT 84092
801 571-6060

SOUTH JORDAN CITY
PARKS DEPARTMENT
1600 West Towne Center Drive
South Jordan, Utah 84095
(801) 254-3742

SOUTH JORDAN

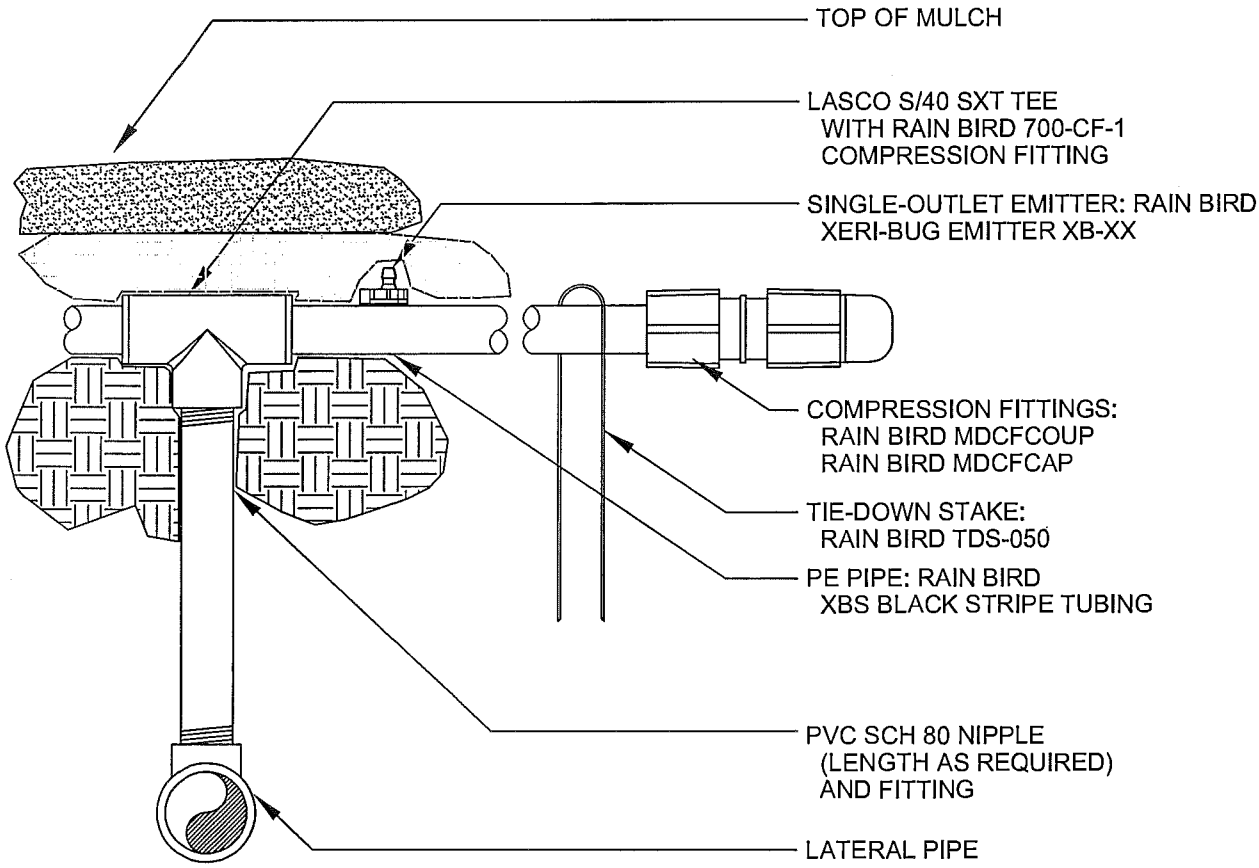

NOTE:
1. USE RAIN BIRD BUG GUN MODEL EMA-BG TO INSERT EMITTER DIRECTLY INTO XBS BLACK STRIPE TUBING.

IRRIGATION DETAIL IRR-29
DRIP PVC TO PE CONNECTION

version: 01, revision: 00, date: 8/2006

DALE WINCHESTER &
ASSOCIATES
2215 East Pincrest Lane
Sandy UT 84092
801 571-6060

SOUTH JORDAN CITY
PARKS DEPARTMENT
1600 West Towne Center Drive
South Jordan, Utah 84095
(801) 254-3742

SOUTH JORDAN

SECONDARY WATER

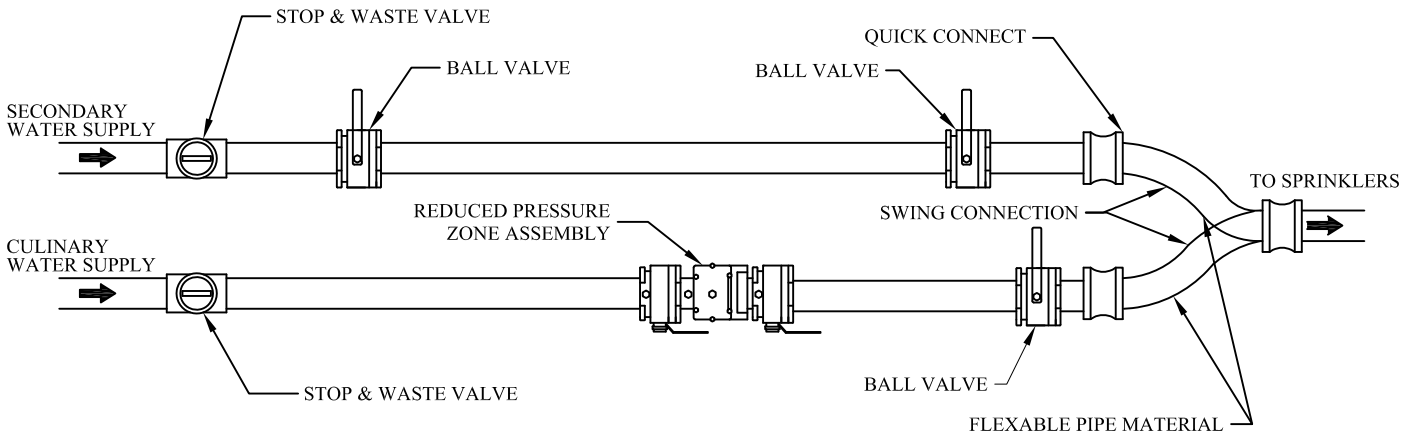

PLAN VIEW

NOT TO SCALE

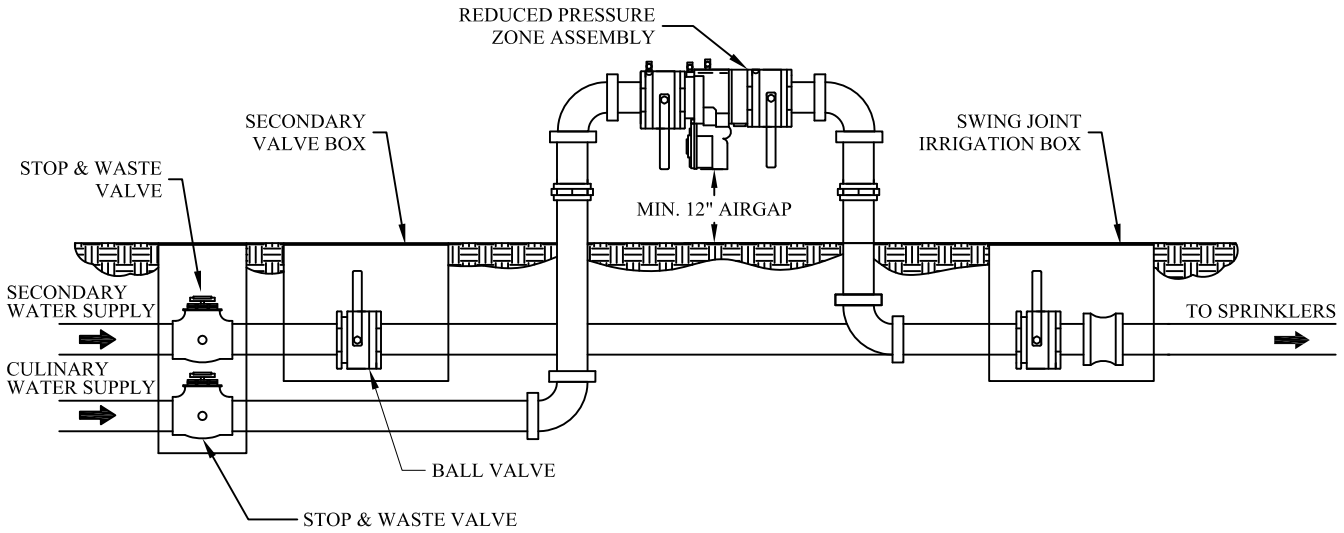

PROFILE VIEW

NOT TO SCALE

NOTES:

1. THE SWING CONNECTION IS INSTALLED SO THAT EITHER THE SECONDARY IRRIGATION WATER OR THE CULINARY WATER IS CONNECTED AND FEEDING THE SPRINKLER SYSTEM AT THE ONE TIME, NEVER BOTH.
2. THE REDUCED PRESSURE ZONE ASSEMBLY MUST BE LOCATED AT A MINIMUM OF 12" FROM WALL, FENCE OR OTHER OBSTACLE.
3. THE REDUCED PRESSURE ZONE ASSEMBLY MUST BE LOCATED AT A MINIMUM OF 12" ABOVE GRADE (NOT ALLOWED IN A PIT BELOW GRADE).
4. THE REDUCED PRESSURE ZONE ASSEMBLY MUST BE TESTED BY A CERTIFIED BACKFLOW TECHNICIAN ON AN ANNUAL BASIS.

SOUTH JORDAN CITY

DATE	REVISIONS	BY	DRAWN: KS	BACKFLOW PREVENTION DEVICE IRRIGATION CONNECTION	STANDARD DRAWING 2001
			DATE: 2/06		

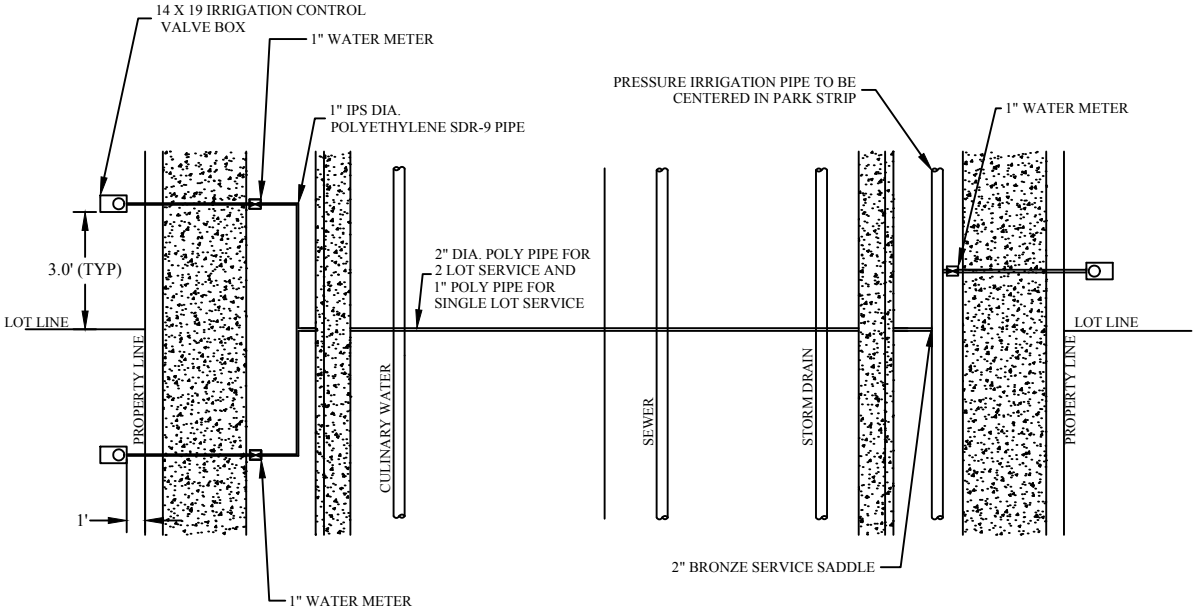

TYPICAL DOUBLE RISER DETAIL

NOT TO SCALE

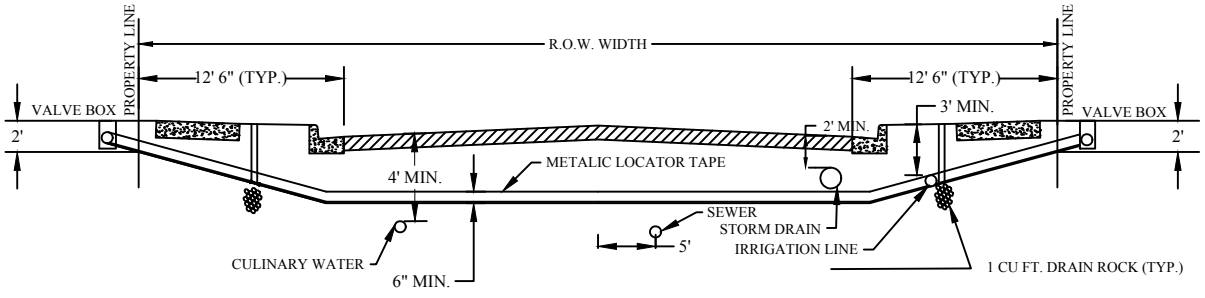

TYPICAL DOUBLE RISER DETAIL

NOT TO SCALE

SOUTH JORDAN CITY

DATE	REVISIONS	BY	DRAWN: KS	SECONDARY WATER LATERAL LAYOUT	STANDARD DRAWING 2002
			DATE: 2/06		

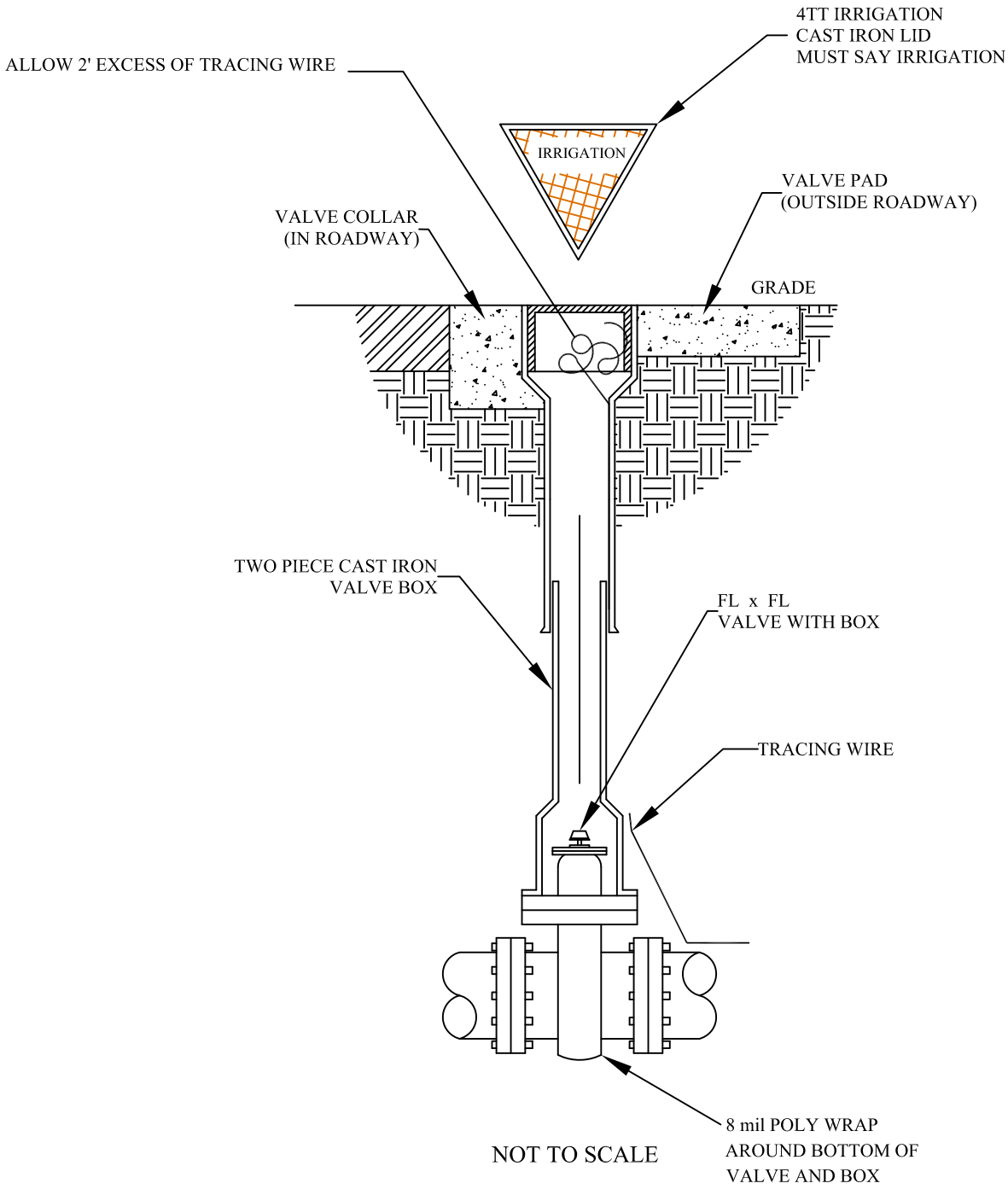

NOT TO SCALE

NOTES: 1. 14 GAUGE COPPER WIRE SHALL BE PLACED OUTSIDE OF BOTTOM OF BOX AND INSIDE TOP OF BOX

2. VALVE OPERATING NUTS SHALL BE WITHIN 3' TO THE FINISHED SURFACE. EXTENTIONS STEMS WITH ROCK SHIELDS SHALL BE PROVIDED WHERE DEPTHS EXCEED 4'.

PREPARED BY:_____

SOUTH JORDAN CITY

DATE	REVISIONS	BY	DRAWN: KS	VALVE BOX INSTALLATION	STANDARD DRAWING 2005
			DATE 1/06		

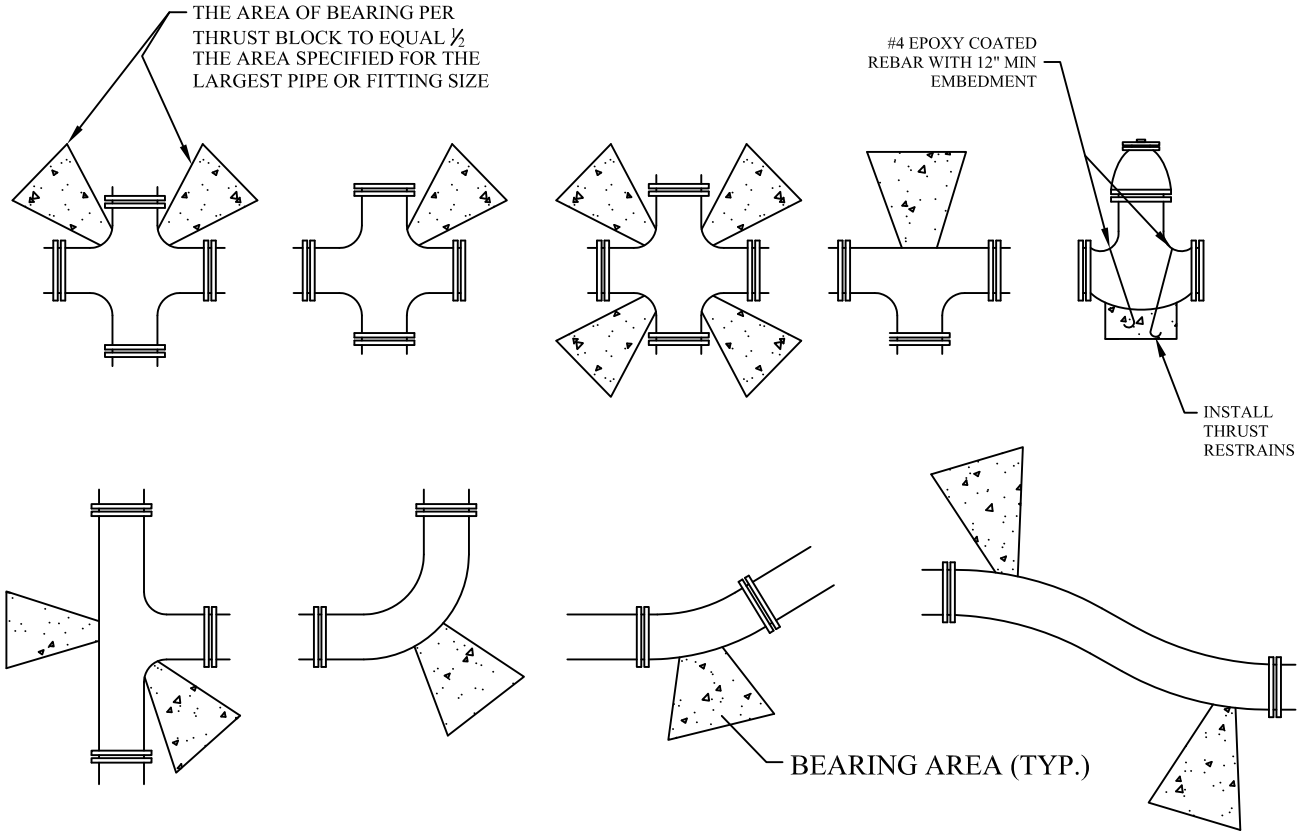

NOT TO SCALE

NOTES:
1. INSPECTION: PRIOR TO BACKFILLING AROUND THRUST BLOCK, SECURE INSPECTIONS OF INSTALLATION BY ENGINEER OR CITY INSPECTOR.
2. BACKFILL: INSTALL AND COMPACT ALL BACKFILL MATERIAL PER SPECIFICATIONS.
3. CONCRETE: CLASS 2,000 MINIMUM. POUR CONCRETE AGAINST UNDISTURBED SOIL.
4. PIPE JOINTS: DO NOT COVER WITH CONCRETE. LEAVE COMPLETELY ACCESSIBLE.
5. GREASE: APPLY POLY-FM GREASE TO ALL BURIED METAL SURFACES. WRAP WITH 8 MIL THICK POLYETHYLENE SHEET AND TAPE WRAP.
6. SPECIAL CONSTRUCTION REQUIREMENTS:
   A. THRUST DESIGN FOR PIPE SIZES OR CONFIGURATIONS NOT SHOWN REQUIRE SPECIAL DESIGN.
   B. BEARING AREAS, VOLUMES, AND SPECIAL THRUST BLOCKING DETAILS SHOWN ON DRAWINGS TAKE PRECEDENCE OVER THIS PLAN.
   C. REINFORCING STEEL BARS TO BE EPOXY COATED AT LEAST 15 MILS THICK. MINIMUM STRESS YIELD STRENGTH OF TIE DOWN BARS IS 70,000 PSI.
   D. LOCKING RESTRAINT DEVICES MAY BE USED IN CONJUNCTION WITH CONCRETE THRUST BLOCKING (AT OPTION OF ENGINEER).
   E. RESTRAINT SIZING IS BASED UPON A MAXIMUM OPERATING PRESSURE OF 150 PSI AND A TEST PRESSURE OF 200 PSI, AND A MINIMUM SOIL BEARING STRESS OF 2,000 PSF. OPERATING PRESSURES IN EXCESS OF 150 PSI OR SOILS WITH LESS THAN 2,000 POUND BEARING STRENGTH WILL REQUIRE SPECIAL DESIGN.
   F. CONCRETE MUST BE ALLOWED TO CURE IN THRUST RESTRAINTS FOR 5 DAYS PRIOR TO PRESSURIZING WATER LINES OR HAVE ADDITIONAL APPROVED THRUST RESTRAINTS INSTALLED PRIOR TO PRESSURIZING THE WATER LINE.
7. MEGALUGS REQUIRED ON ALL FITTINGS

MINIMUM BEARING AREA IN SQ. FT.					
SIZE OF PIPE	TEES, VALVES DEAD ENDS	90° BENDS	45° BENDS	22 1/2° BENDS	11 1/4° BENDS
4"	2	3	2	2	2
6"	4	5.5	3	1.5	1
8"	6.5	9.5	5	2.75	1.5
12"	14	20	11	5.5	3
14"	19	26.5	14.5	7.5	4
16"	24	34	18.5	9.5	6
20"	27	52	28.5	14.5	16
24"	53	74	41	21	53
30"	81	114	62	32	16

PREPARED BY:_____

SOUTH JORDAN UTAH

SOUTH JORDAN CITY

DATE	REVISIONS	BY

DRAWN:

DATE

DIRECT BEARING THRUST BLOCKS / TIE DOWN RESTRAINTS

STANDARD DRAWING
2006

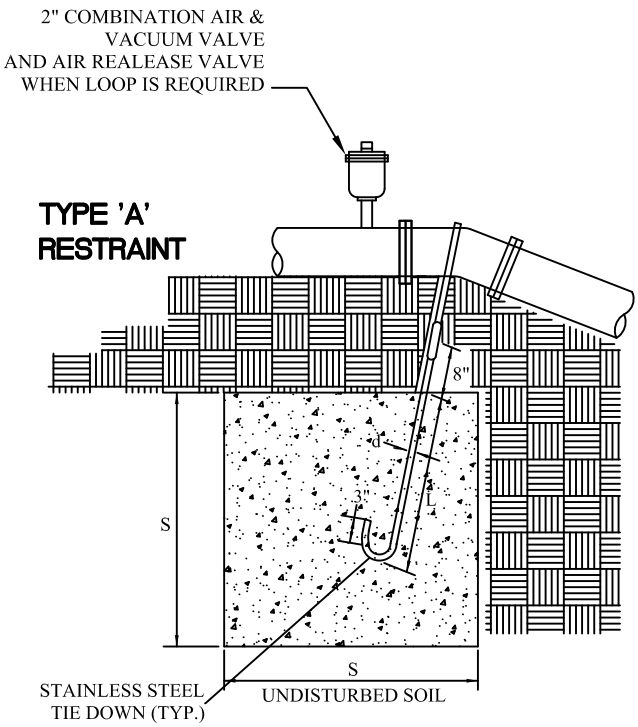

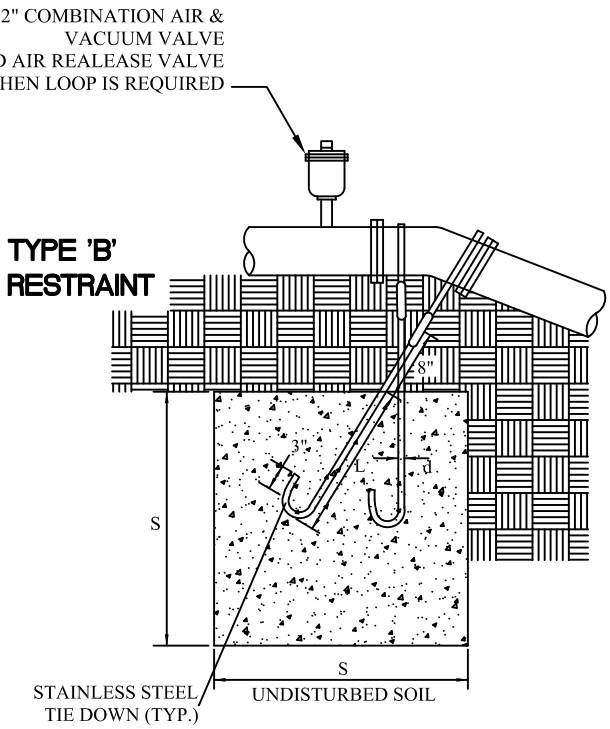

NOT TO SCALE

TYPE 'A' RESTRAINT

FOR 11 1/4°-22 1/2° VERTICAL BENDS

TABLE OF DIMENSIONS

	VB		S	d	L
PIPE SIZE NOMIN. DIAMETER - INCH	VERTICAL BEND DEGREES	NO. OF CU FT. OF CONC. BLOCKING	SIDE OF CUBE FEET	DIAMETER OF SHACK OR REBAR RODS - INCH	DEPTH OF RODS IN CONCRETE FT.
4"	11 1/4°	8	2.O	5/8"	1.5
	22 1/2°	15.6	2.5	5/8"	2.O
6"	11 1/4°	15.6	2.5	5/8"	2.O
	22 1/2°	34.3	3.25	5/8"	2.O
8"	11 1/4°	27	3.O	5/8"	2.O
	22 1/2°	64	4.O	5/8"	2.O
12"	11 1/4°	64	4.O	3/4"	2.O
	22 1/2°	125	5.O	3/4"	3.O
16"	11 1/4°	1O7	4.25	7/8"	3.O
	22 1/2°	216	6.O	7/8"	4.O
2O"	11 1/4°	138	5.17	1"	3.5
	22 1/2°	334	6.94	1"	4.O
24"	11 1/4°	24O	6.22	1"	4.O
	22 1/2°	476	7.81	1"	4.O
3O"	11 1/4°	369	7.17	1"	4.O
	22 1/2°	733	9.O2	1"	4.O

TYPE 'B' RESTRAINT

FOR 45° VERTICAL BENDS

TABLE OF DIMENSIONS

	VB		S	d	L
PIPE SIZE NOMIN. DIAMETER - INCH	VERTICAL BEND DEGREES	NO. OF CU C.Y. OF CONC. BLOCKING	SIDE OF CUBE FEET	DIAMETER OF SHACK OR REBAR RODS - INCH	DEPTH OF RODS IN CONCRETE FT.
4"	45°	1	3.O	5/8"	2.O
				5/8"	
6"	45°	2.37	4.O	5/8"	2.5
				5/8"	
8"	45°	3.97	4.75	5/8"	2.O
				5/8"	
12"	45°	9.O4	6.25	5/8"	4.O
				5/8"	
16"	45°	17.24	7.75	3/4"	4.O
				3/4"	
2O"	45°	26.52	8.95	3/4"	4.O
				3/4"	
24"	45°	37.82	1O.O7	3/4"	4.O
				3/4"	
3O"	45°	58.26	11.63	3/4"	4.O
				3/4"	

PREPARED BY: _____

SOUTH JORDAN
U T A H

SOUTH JORDAN CITY

DATE	REVISIONS	BY

DRAWN:

DATE

TIE DOWN THRUST RESTRAINTS

STANDARD DRAWING

2007

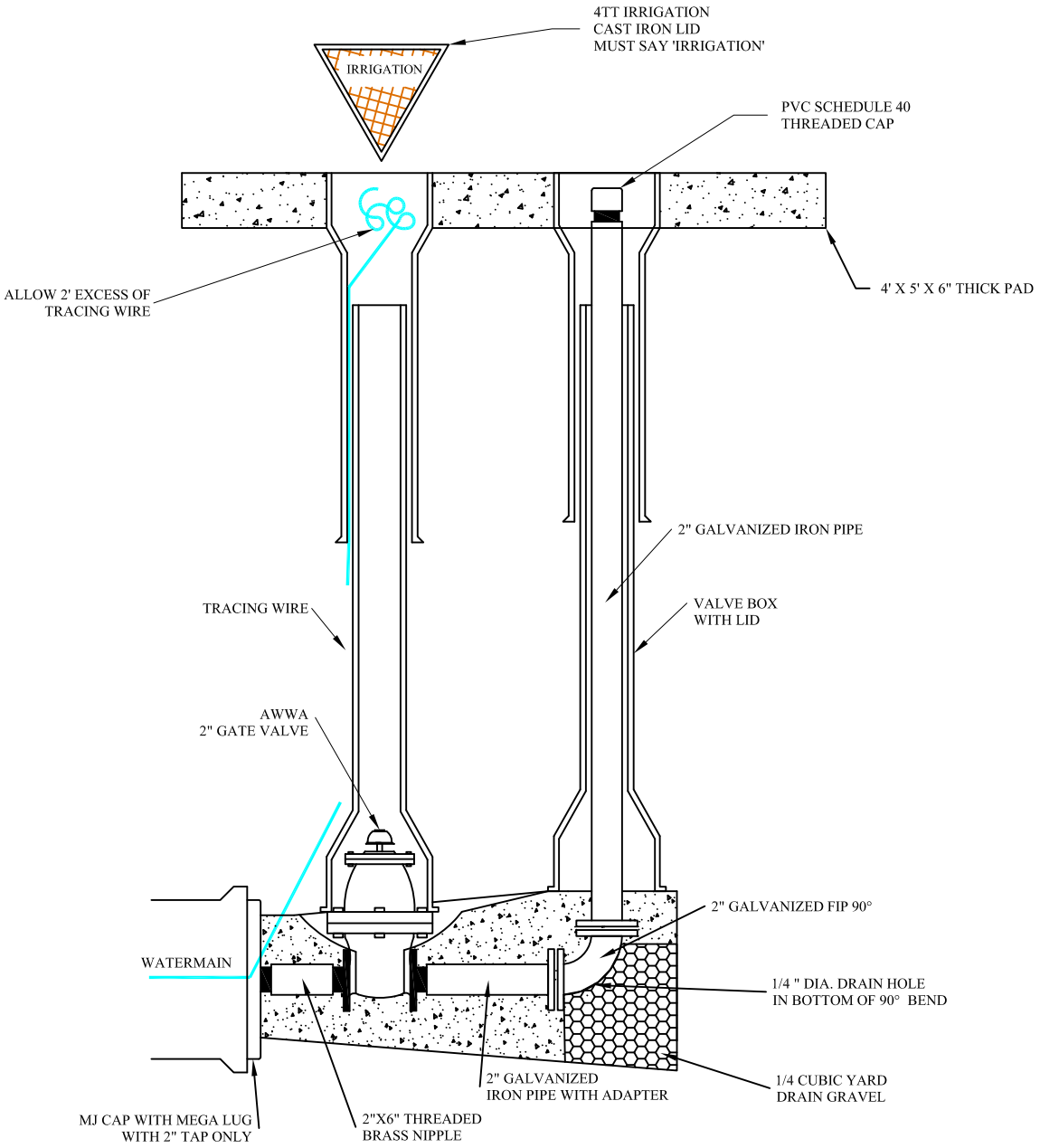

NOT TO SCALE

NOTES:

1. INSPECTION: PRIOR TO BACKFILLING AROUND THRUST BLOCK, SECURE INSPECTION OF INSTALLATION BY CITY ENGINEER.
2. BACKFILL: INSTALL AND COMPACT ALL BACKFILL MATERIAL PER SPECIFICATIONS.
3. CONCRETE: CLASS 2,000 MINIMUM. POUR CONCRETE AGAINST UNDISTURBED SOIL. THRUST BLOCK MUST MEET APWA.
4. TAPE: APPLY TAPE WRAP TO THE EXTERIOR OF ALL GALVANIZED PIPE PER AWWA C209
5. SPECIAL DESIGN: WATERMAINS 12" AND LARGER WILL REQUIRE SPECIAL WASHOUT ASSEMBLY DESIGN.
6. DRAINAGE: AFTER INSTALLATION OF WASHOUT VALVE ASSEMBLY, VERIFY THE WASHOUT VALVE RISER DRAINS TO GRAVEL.
7. WRAP ALL FOOTINGS PRIOR TO PLACEMENT OF THRUST BLOCKING

PREPARED BY: _____

SOUTH JORDAN CITY

DATE	REVISIONS	BY	DRAWN: / DATE	SECONDARY WASHOUT VALVE ASSEMBLY	STANDARD DRAWING 2008

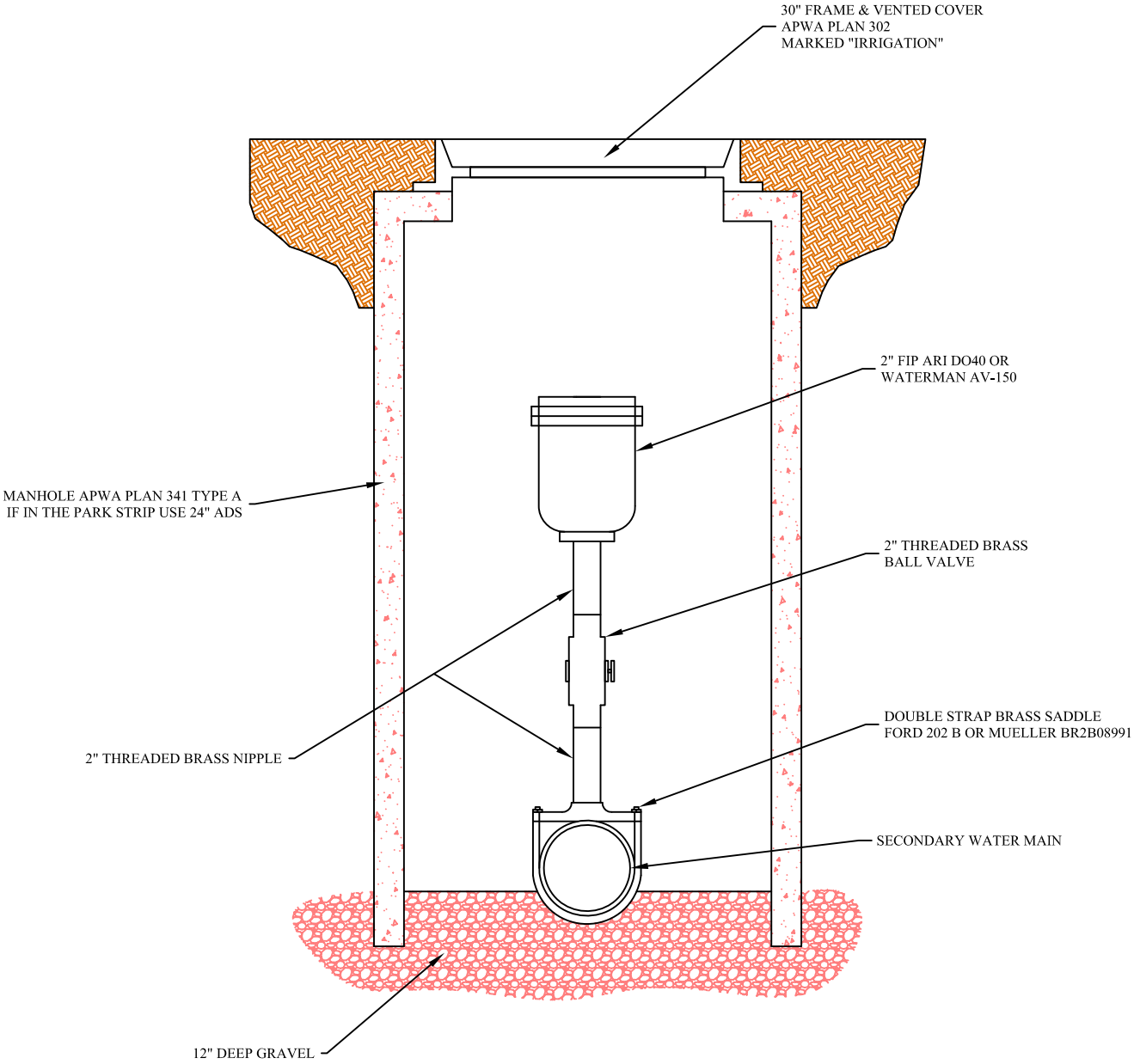

NOT TO SCALE

SOUTH JORDAN CITY

DATE	REVISIONS	BY	DRAWN: AP	SECONDARY WATER 2" AIR/VACUUM RELEASE VALVE	STANDARD DRAWING 2010
			DATE: 02/08		

Notes:
1. IRRIGATION WATERMAINS: LOCATED IN PARK STRIPS ON SOUTH AND WEST SIDE OF STREET
2. MINIMUM SIZE: 8"
3. VALVES: REQUIRED ON EACH LEG OF CONNECTION AND AT MAXIMUM 800 FOOT SPACING
4. ADDITIONAL REQUIREMENTS: CAPS, VALVES, BLOWOFFS, DRAINS, AIR VALVES AND SERVICE CONNECTIONS MAY BE REQUIRED.

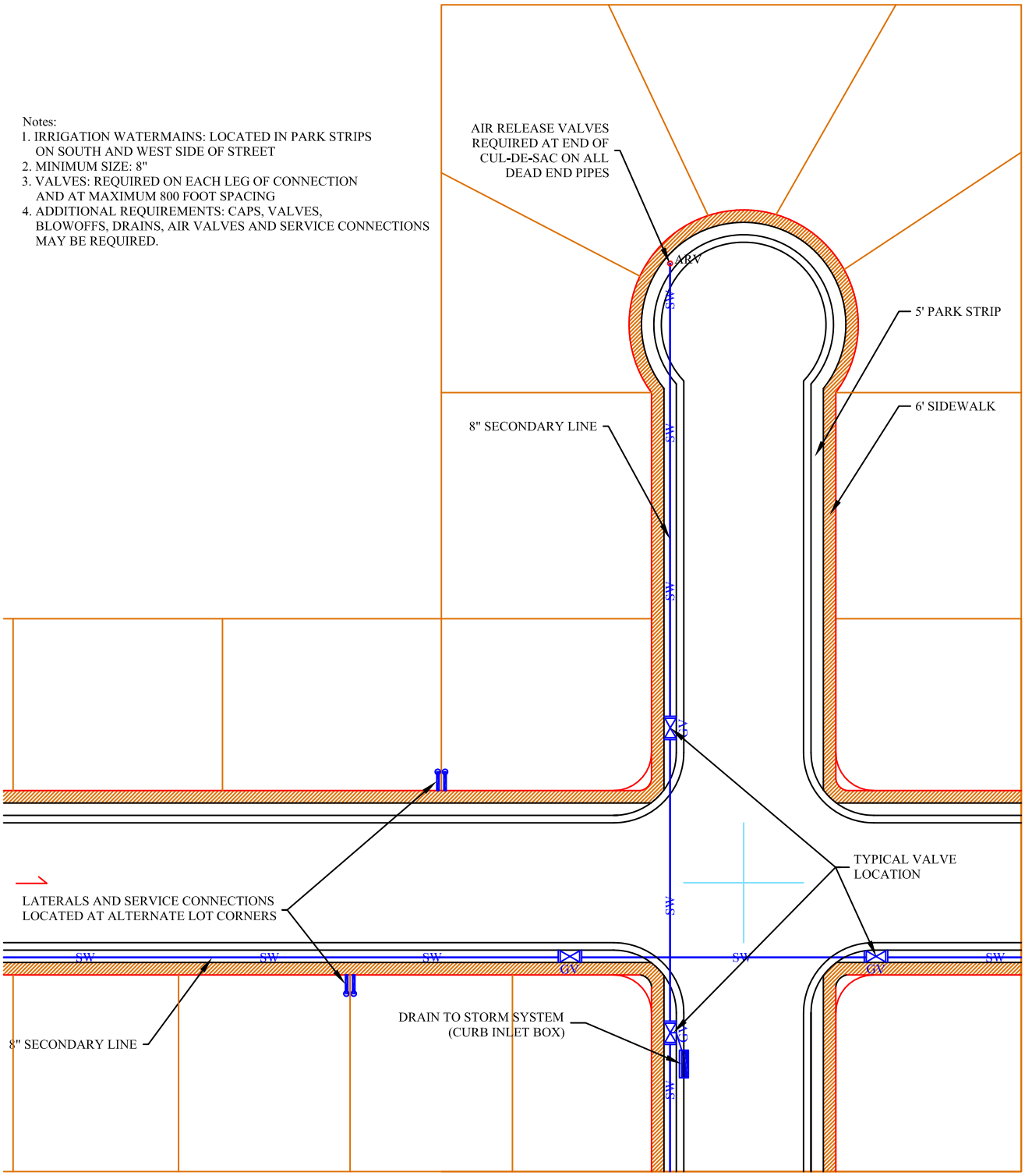

NOT TO SCALE

SOUTH JORDAN UTAH

SOUTH JORDAN CITY

DATE	REVISIONS	BY	DRAWN: AP	SECONDARY RESIDENTIAL INSTALLATION	STANDARD DRAWING 2011
			DATE: 02/08		

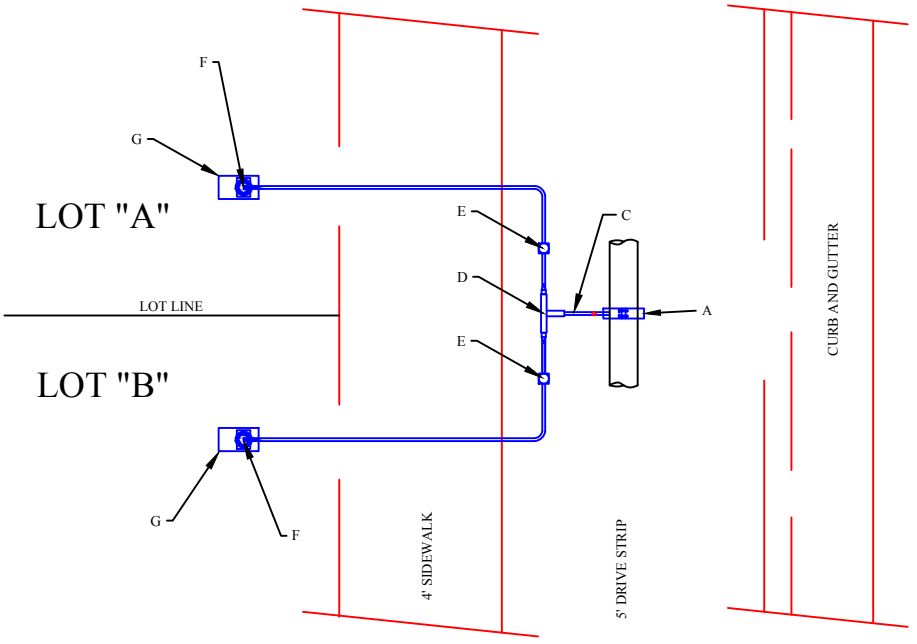

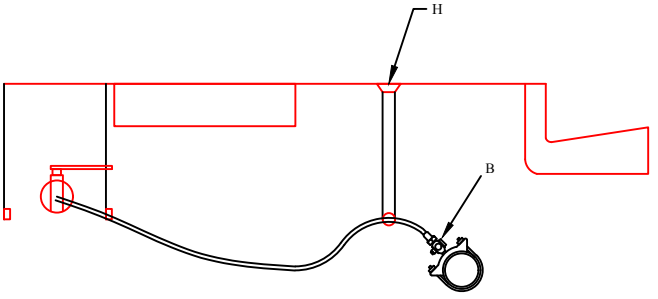

SIZE	DESCRIPTION	SIZE	COMMENTS
A	TAPPING SADDLE	VARIES	BRASS DOUBLE STRAP SADDLE FORD 202B OR MUELLER BR2B08991
B	2" CTS x MIP ADPT.		FORD C84-72QNL OR MUELLER H15428N
C	POLY PIPE	2"	CTS, PURPLE SDR 9
D	TEE AND 2 x 1 BUSHINGS	2"	BRASS
E	WATER METER	1"	
F	BALL VALVE	1"	BALVE VALVE w/ HANDLE
G	SERVICE BOX	12" x 18"	IRRIGATION CONTROL VALVE BOX CARSON 1419-B-12
H	WATER METER BOX		FORD METER BOX LYLBB111-444-C16171-001-NL

NOT TO SCALE

SOUTH JORDAN

SOUTH JORDAN CITY

DATE	REVISIONS	BY	DRAWN: AP DATE: 02/08	SECONDARY WATER SERVICE CONNECTION	STANDARD DRAWING 2012

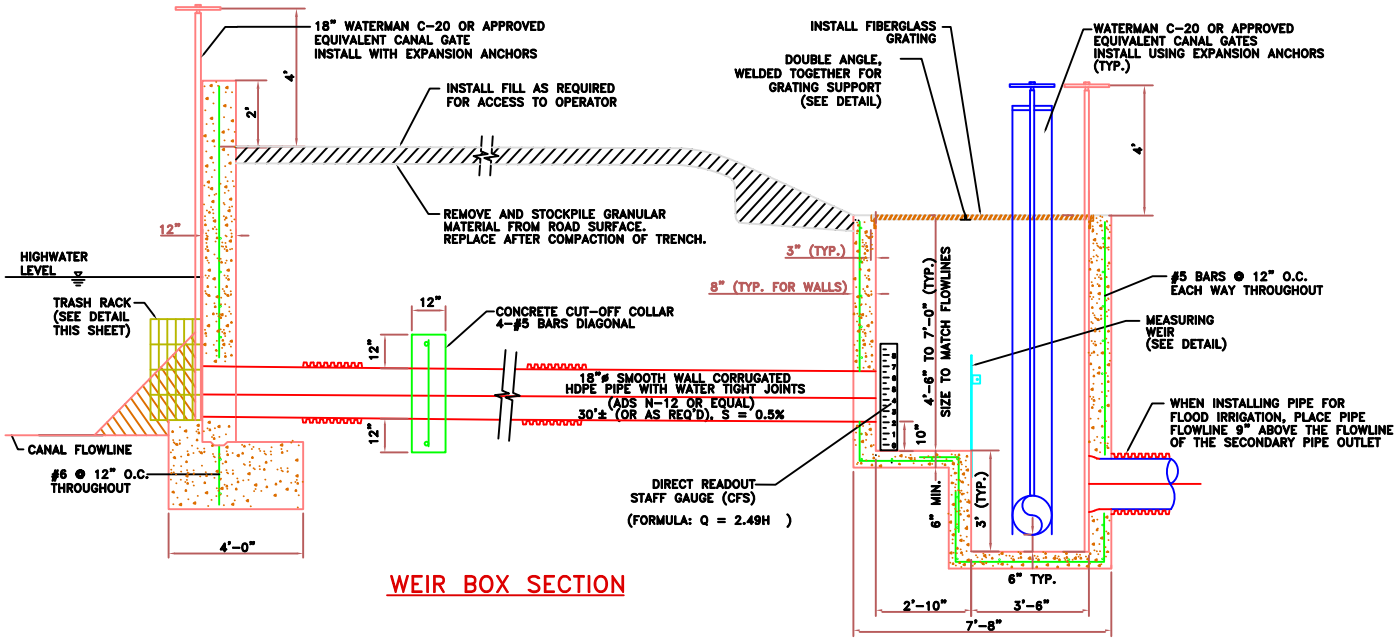

WEIR BOX SECTION

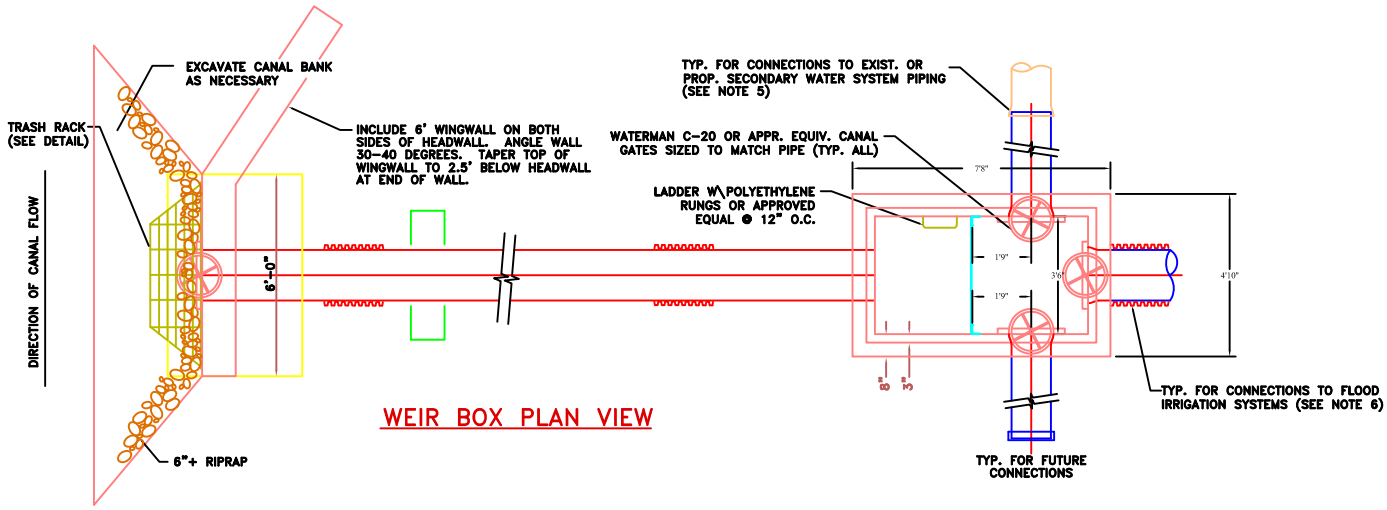

WEIR BOX PLAN VIEW

NOT TO SCALE

SOUTH JORDAN UTAH

SOUTH JORDAN CITY

DATE	REVISIONS	BY	DRAWN: TB	PRESSURE IRRIGATION CANAL GATE AND WEIR BOX	STANDARD DRAWING 2014
			DATE: 11/07		

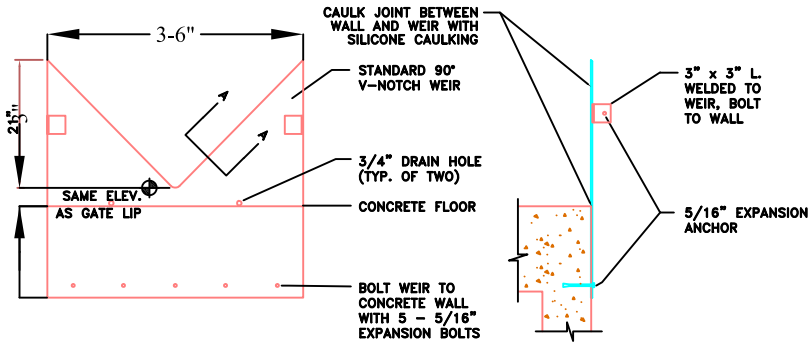

WEIR FRONT VIEW

WEIR SIDE VIEW

NOTE:
WEIR TO BE HOT-DIP GALVANIZED AFTER FABRICATION

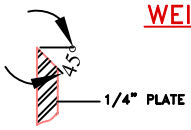

SECTION A-A

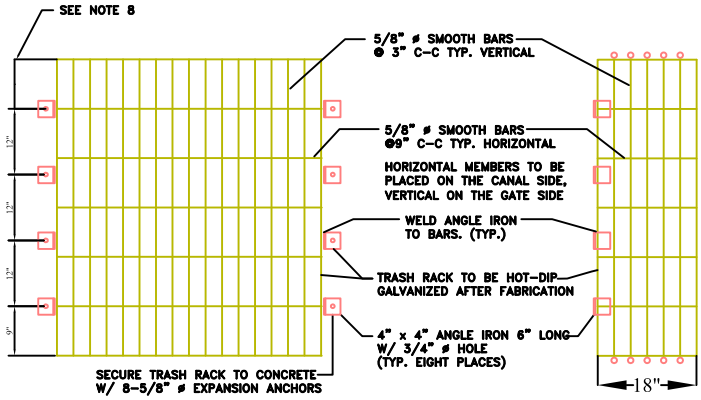

FRONT VIEW

SIDE VIEW

TRASH RACK DETAILS

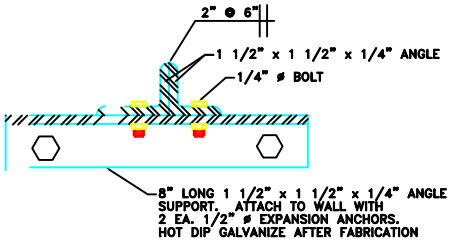

DOUBLE-ANGLE GRATING SUPPORT DETAIL

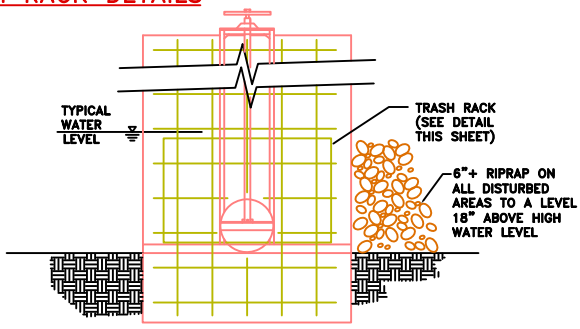

SLIDE GATE DETAIL
N.T.S.

NOT TO SCALE

SOUTH JORDAN

SOUTH JORDAN CITY

DATE	REVISIONS	BY	DRAWN: TB	PRESSURE IRRIGATION CANAL GATE AND WEIR BOX	STANDARD DRAWING 2015
			DATE: 11/07		

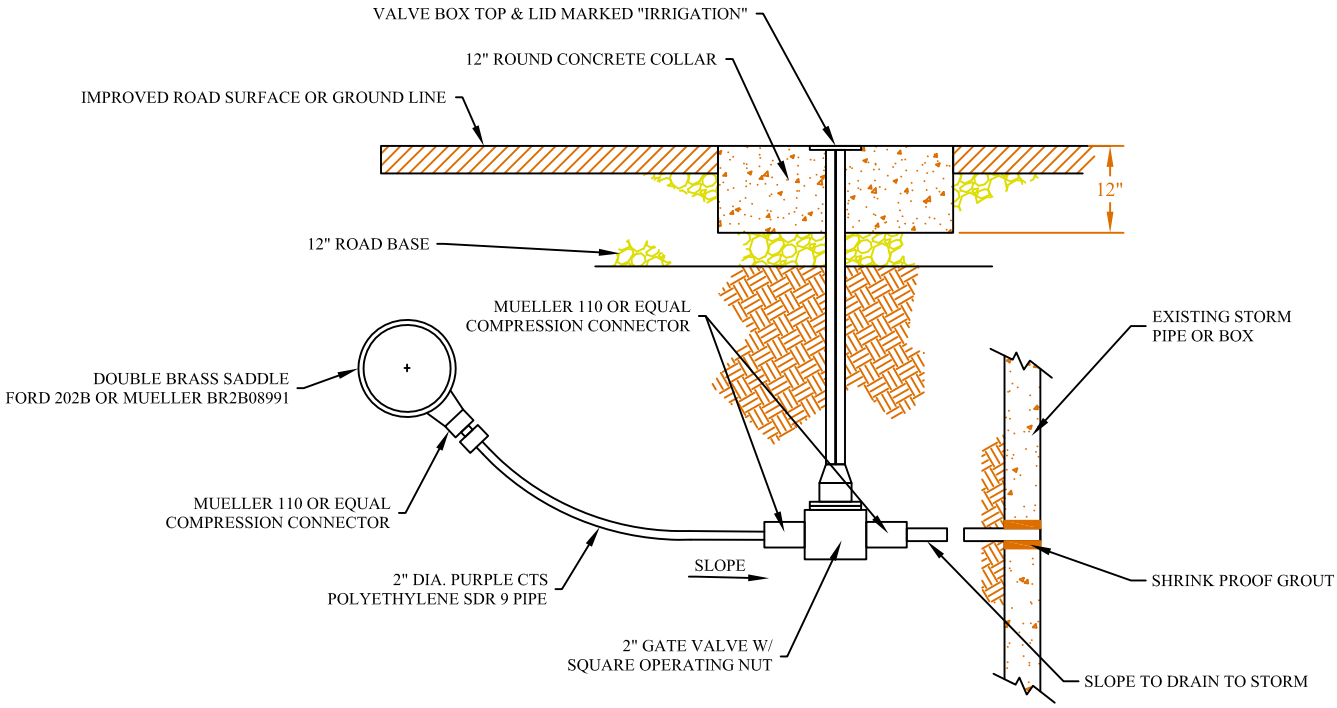

2" DRAIN VALVE DETAIL

NOT TO SCALE

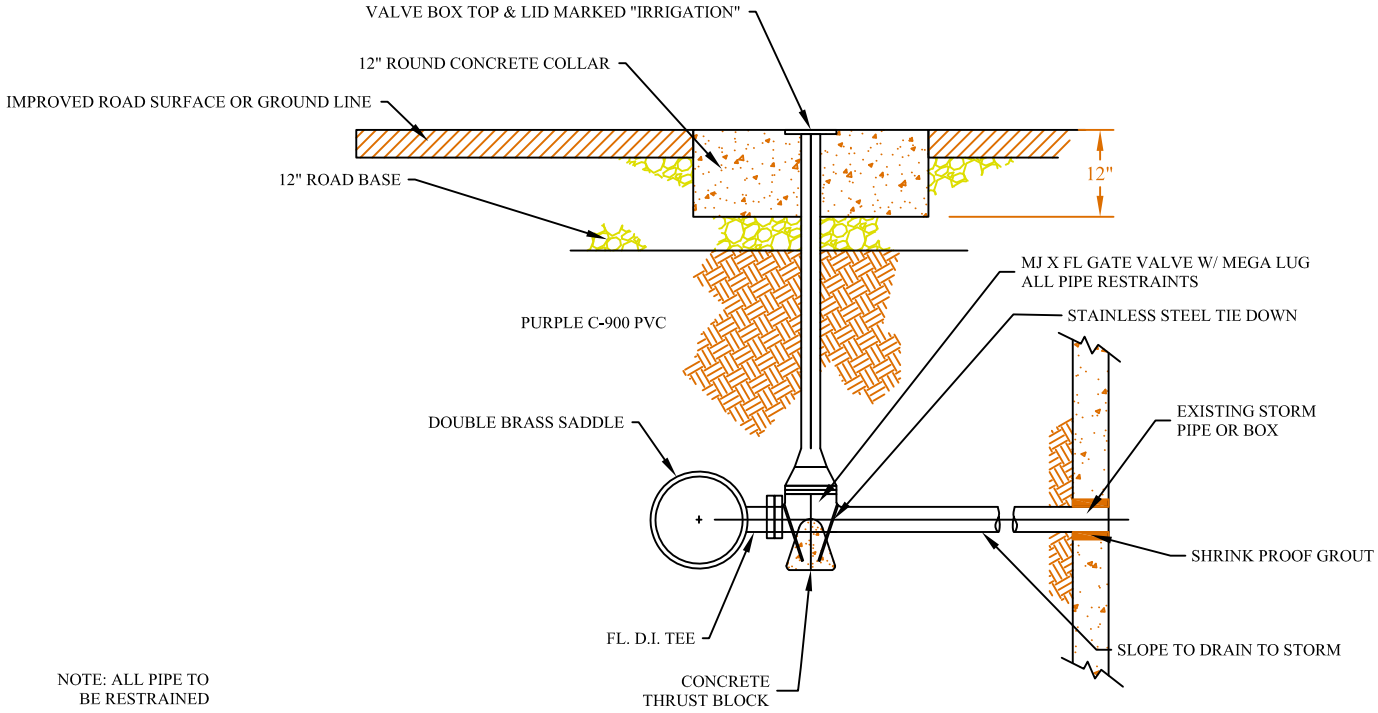

NOTE: ALL PIPE TO
BE RESTRAINED

4" AND LARGER DRAIN VALVE DETAIL

NOT TO SCALE

SOUTH JORDAN

SOUTH JORDAN CITY

DATE	REVISIONS	BY	DRAWN: AP DATE: 02/08	2" AND 4" DRAIN VALVE DETAIL	STANDARD DRAWING 2016

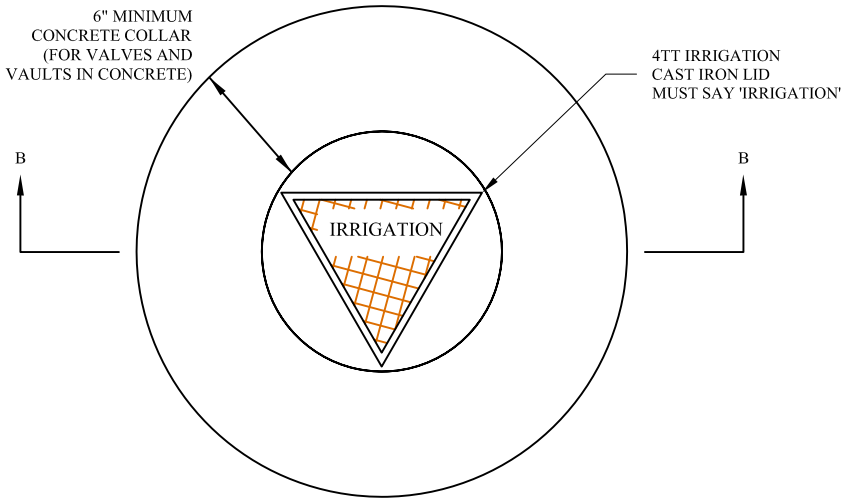

PLAN VIEW

NOT TO SCALE

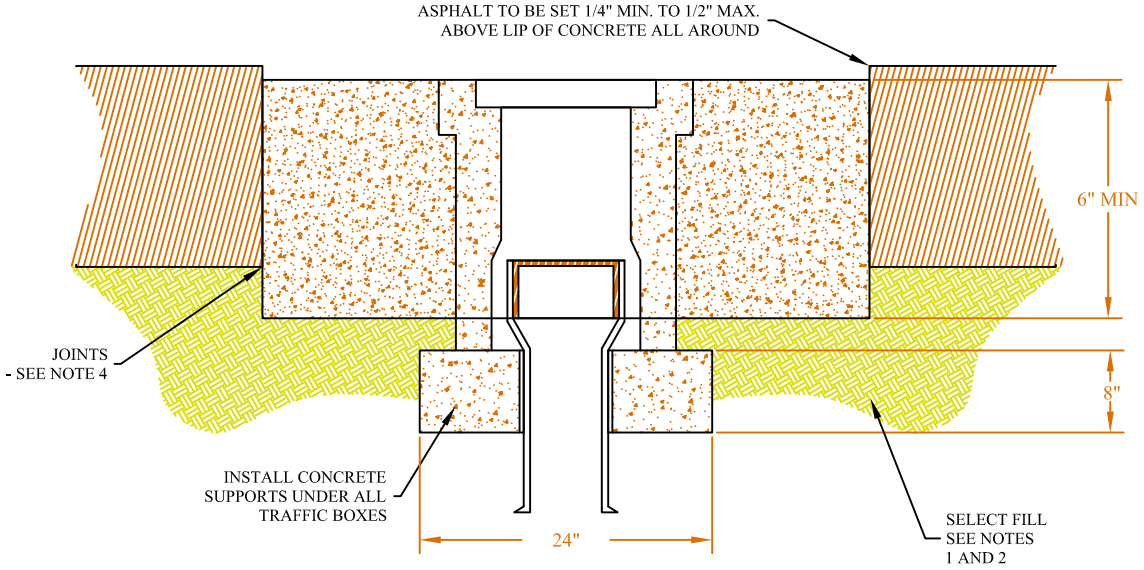

SECTION B-B

NOT TO SCALE

NOTES

1. BACKFILL: INSTALL AND COMPACT ALL BACKFILL MATERIAL PER SPECIFICATIONS.
2. SELECT FILL: USE UNTREATED BASE COURSE GRADE 3/4" MAXIMUM PER SPECIFICATONS. USE OF SEWER ROCK OR RECYCLED AGGREGATE REQUIRES ENGINEER'S WRITTEN APPROVAL.
3. CONCRETE: CLASS 4,000. APPLY A SEALING/COURING COMPOUND PER SPECIFICATONS.
4. JOINTS: PROVIDE A NEAT STRAIGHT JOINT BETWEEN EXISTING AND NEW ASPHALT CONCRETE SURFACES. PROVIDE CONCENTRIC CIRCLE CUT. CLEAN EDGES OF ALL DIRT, OIL AND LOOSE DEBRIS.

SOUTH JORDAN
U T A H

SOUTH JORDAN CITY

DATE	REVISIONS	BY	DRAWN: AP DATE: 02/08	COVER COLLAR (IN PAVEMENT)	STANDARD DRAWING 2017

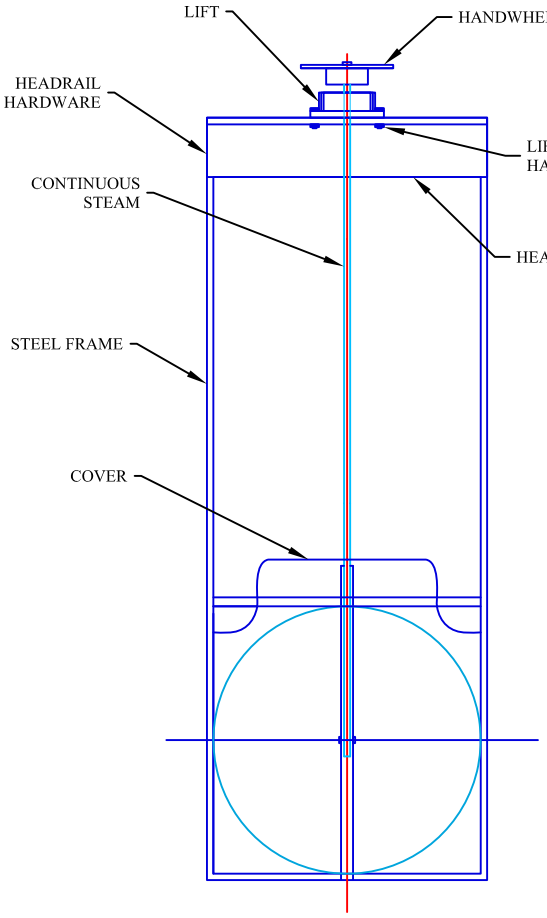

VIEW A
NOT TO SCALE

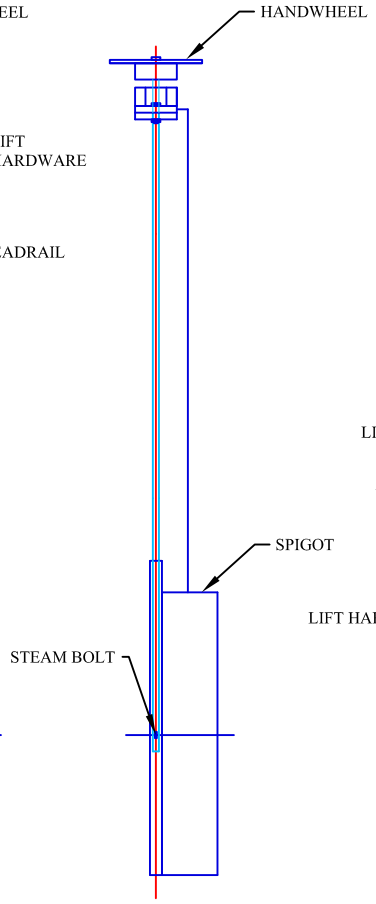

VIEW B
NOT TO SCALE

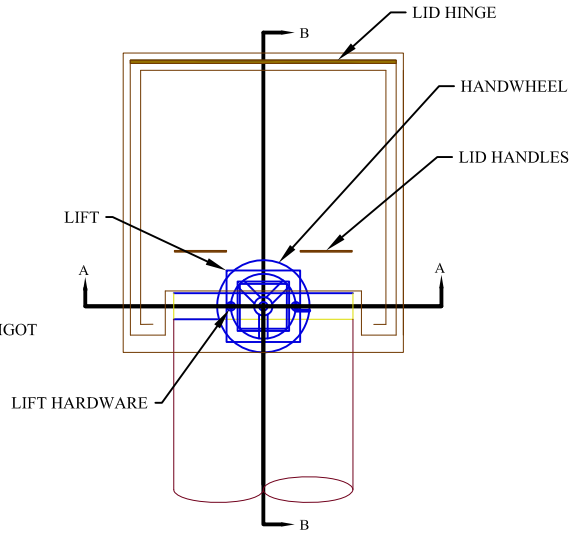

PLAN VIEW
NOT TO SCALE

NOTES

1. MANUFACTURER: WATERMAN INDUSTRIES, INC.
2. MATERIAL: ALUMINUM OR STAINLESS STEEL
3. IRRIGATION COMPANY MUST APPROVE.

SOUTH JORDAN
U T A H

SOUTH JORDAN CITY

DATE	REVISIONS	BY	DRAWN: AP	IRRIGATION SLIDE GATE DETAIL	STANDARD DRAWING 2020
			DATE: 02/08		

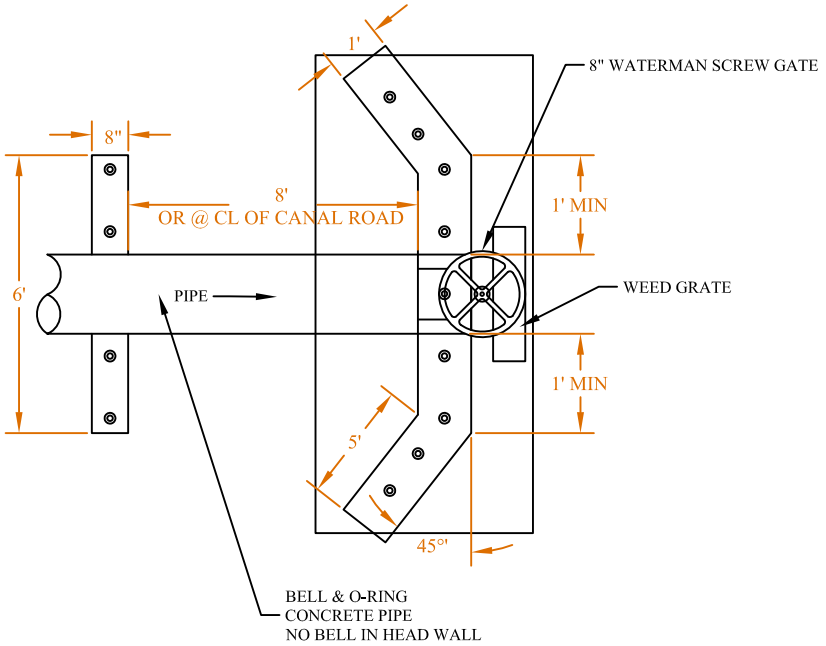

TOP VIEW

NOT TO SCALE

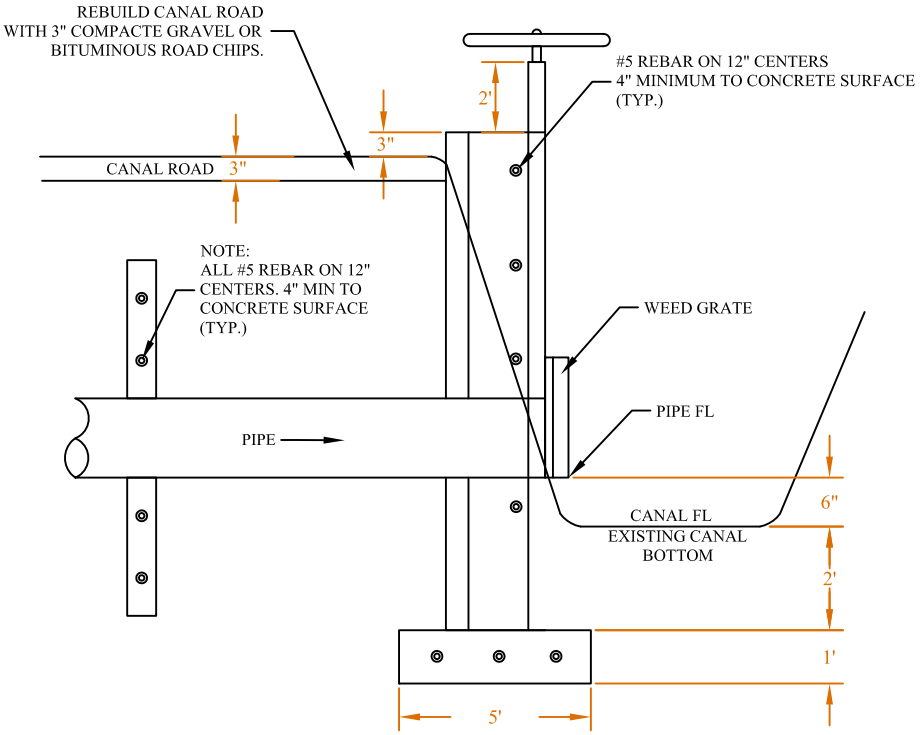

SIDE VIEW

NOT TO SCALE

SOUTH JORDAN
UTAH

SOUTH JORDAN CITY

DATE	REVISIONS	BY	DRAWN: AP	HEADWALL DETAIL	STANDARD DRAWING 2021
			DATE: 02/08		

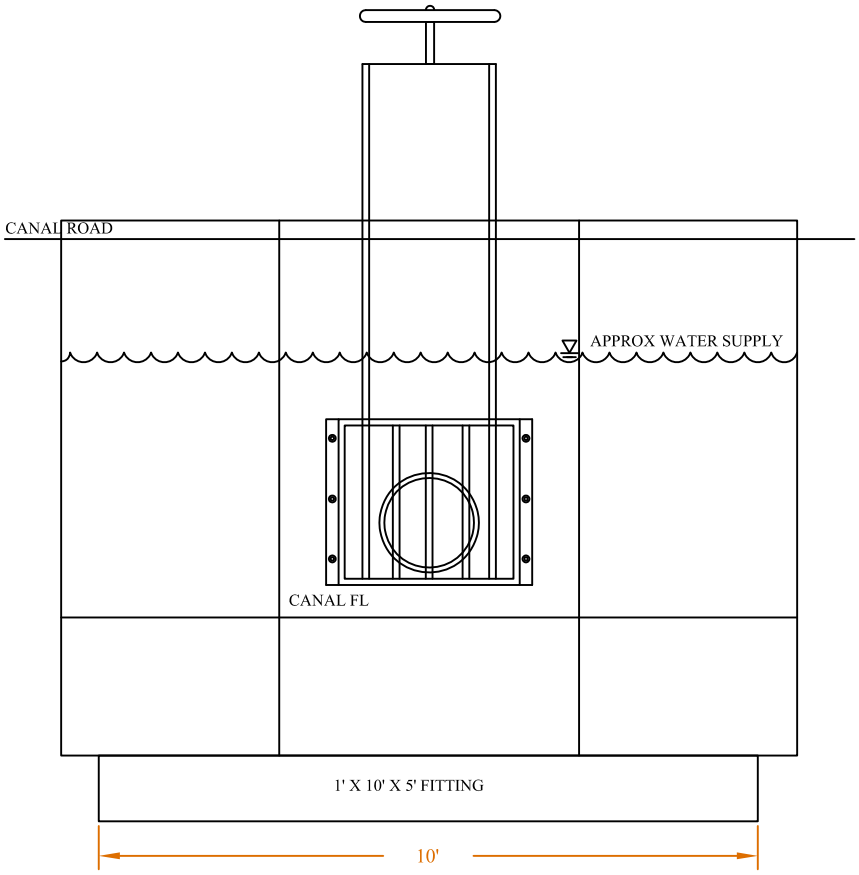

FRONT VIEW
NOT TO SCALE

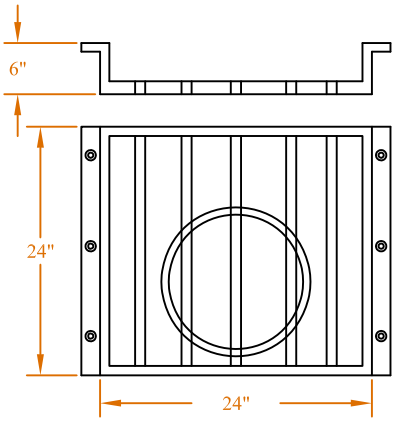

WEED GRATE
NOT TO SCALE

NOTES

1. ALL ATTACHING BOLTS ARE TO BE 5/8" STAINLESS STEEL.
2. BACKFILL WITH IMPENETRABLE CLAY.
3. ALL MATERIALS AND WORK TO MEET UDOT STANDARDS 96% COMPACTION.
4. CONTROL OUTLET VELOCITY IN ORDER TO KEEP WATER FROM RUNNING OVER EXISTING CONCRETE BOX.
5. INSURANCE. THE CONTRACTOR WORKING ON THE CANAL SHALL OBTAIN AND MAINTAIN DURING THE CONSTRUCTION PERIOD, GENERAL LIABILITY INSURANCE IN THE AMOUNT OF AT LEAST $1,000,000 (ONE MILLION DOLLARS FOR INJURY, DEATH, OR PROPERTY DAMAGE ARISING OUT OF A SINGLE OCURRENCE AND WORKMAN'S COMPENSATION INSURANCE AS REQUIRED BY THE STATE OF UTAH. THE COMPANY SHALL REQUIRE THEIR INSURANCE
6. ALL WORK SHALL START AFTER OCTOBER 15TH AND BE COMPLETED BEFORE APRIL 1ST.

SOUTH JORDAN
UTAH

SOUTH JORDAN CITY

DATE	REVISIONS	BY	DRAWN: AP	HEADWALL DETAIL	STANDARD DRAWING 2022
			DATE: 02/08		

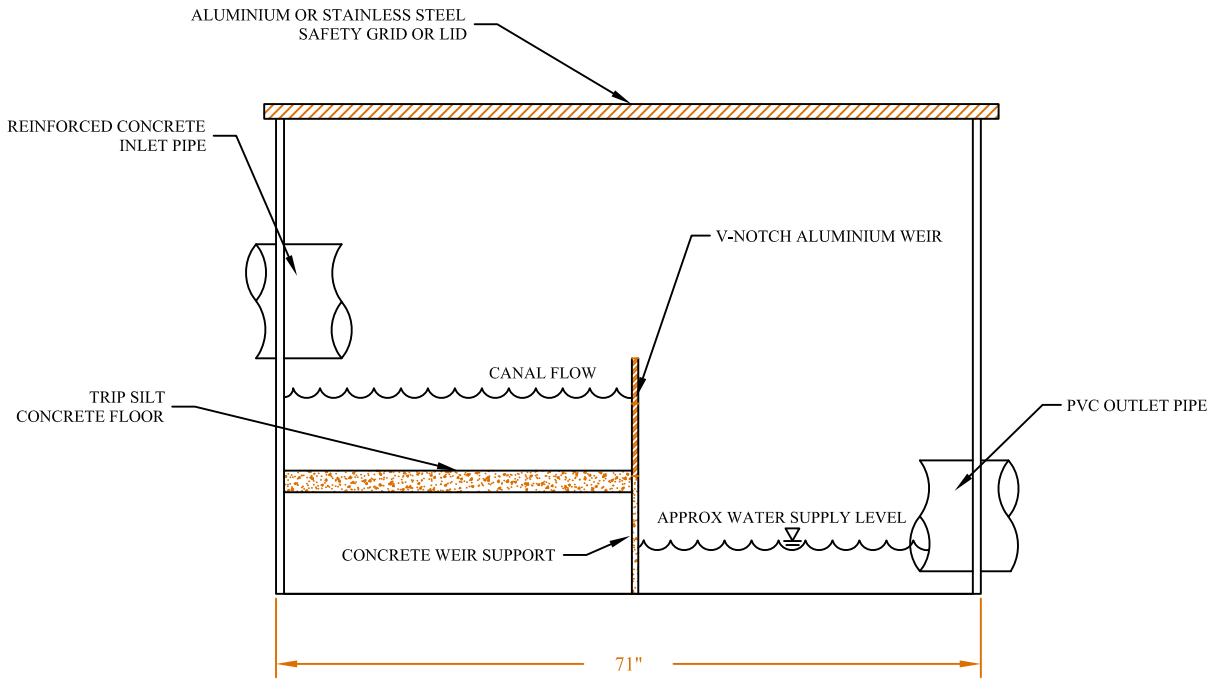

SIDE VIEW
NOT TO SCALE

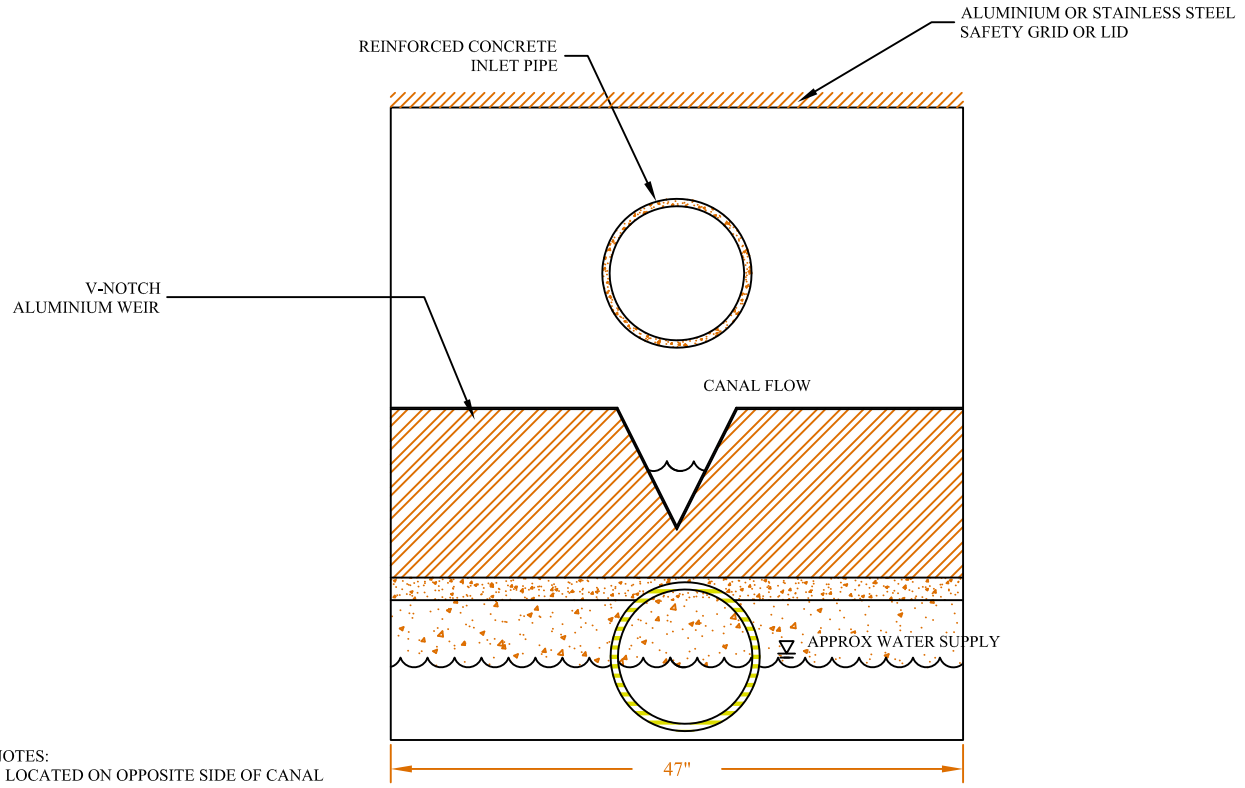

NOTES:
1. LOCATED ON OPPOSITE SIDE OF CANAL ROAD AS THE WEIR IS NOT ALLOWED IN BACKYARDS.

FRONT VIEW
NOT TO SCALE

SOUTH JORDAN
UTAH

SOUTH JORDAN CITY

DATE	REVISIONS	BY	DRAWN: AP DATE: 02/08	SILT TRAP BOX DETAIL	STANDARD DRAWING 2023

ITEM	DESCRIPTION	QTY	MATERIAL	CATALOG NUMBER
1	LOCKING LID	1	CAST GRAY IRON	LYL-4-IRR-T
2	BOX	1	CAST GRAY IRON	LYBB-4
3	BALL VALVE	2	CAST NO-LEAD BRASS	YBBV13-344W-NL
4	EXPANSION CONNECTION	1	CAST NO-LEAD BRASS	EC-4-NL
5	SPACER	1	COPPER	SPACER-4-DV-NL
6	ELL	2	CAST NO-LEAD BRASS	LA81-44-NL

C16171-001

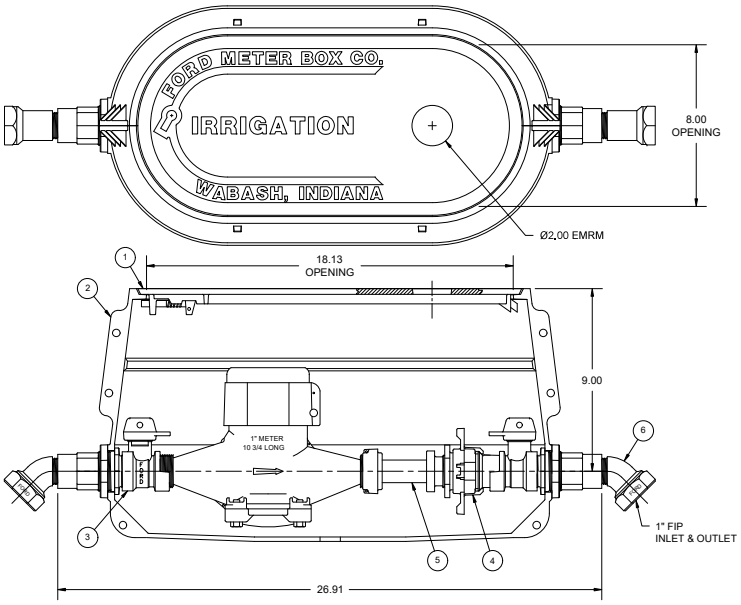

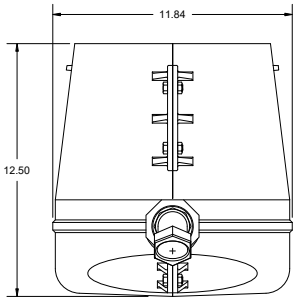

NOTES:

BRASS INLET AND OUTLET VALVES ARE ASSEMBLED TO THE BOX.
(EXPANSION CONNECTION AND SPACER ARE AWT, PACKED
IN A CARTON, AND SHIPPED INSIDE THE YOKEBOX.)

PROPOSAL
CIDS: 16171 #1
DATE: 10/15/19
INITIAL: RLR

REV.	DATE	CIDS	REVISION DESCRIPTION	DWN BY	APPV BY
0	10/11/2019	16171	PROPOSAL #1	KLP	RLR

LYLBB111-444-C16171-001-NL

ASSY, 1" LONG YOKEBOX, IRRIGATION, EMRM, 1" FIP ANGLED INLET & OUTLET, LESS CHECK VALVE

TOLERANCES: UNLESS OTHERWISE SPECIFIED
.X/X ± N/A
.XX ± N/A
.XXX ± N/A
∠ ± N/A

PATTERN:
CORE(S):
EST WEIGHT: ---- lb
SCALE: 1:4
SIZE: B
DRAWING NO. C16171-001

THE FORD METER BOX CO., INC.
Wabash, Indiana 46992 U.S.A.

IMPORTANT NOTICE
This drawing is part of information made available to one client, under obligation of confidence, as a proprietary design owned by The Ford Meter Box Company, Inc. (FMBCo). Any use of this information for any purpose other than that for which it was originally intended, or any disclosure to third parties without the express written consent of FMBCo, is prohibited. FMBCo does not warrant the accuracy or completeness of the information, nor does it assume any liability for its use in any other form or for any purpose other than that for which it was originally intended. The recipient agrees to indemnify FMBCo against any loss, expense or liability of any kind resulting from its use of the information. Reproduction of this drawing without FMBCo's written consent is prohibited. This drawing and all copies shall be returned to FMBCo on request.

PREPARED BY: _____

SOUTH JORDAN CITY

DATE	REVISIONS	BY

DRAWN:

DATE 3/19

SECONDARY METER BOX

STANDARD DRAWING 2024

STORM DRAIN

A-1180

SOUTH JORDAN
U T A H

Storm Drain Manhole Cover

(Platen-bottom cover)

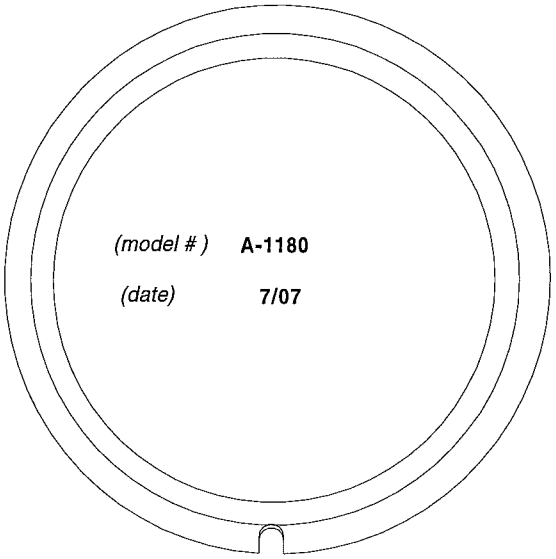

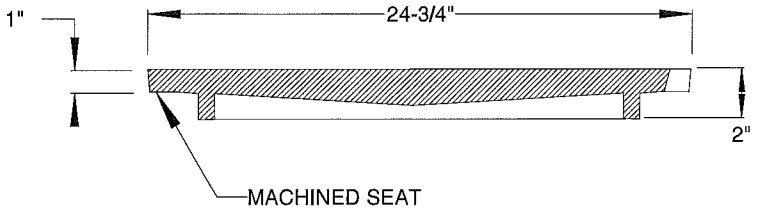

COVER EXCEEDS A COMPRESSION TEST OF UP TO 50,000 LBS.

CAST IRON conforms to ASTM A-48-93 Class 35B Meets H-20 Wheel Loading		**D&L model No. A-1180**	**D&L Foundry & Supply** CA Sales: (707) 557-4525 Fax: (707) 557-4655 UT Sales: (801) 785-5015 Fax: (801) 785-0835 WA Sales: (509) 765-7952 Fax: (509) 765-8124
Designation: A-1180	Date: July 2007	Prepared by: Jesse Walker D&L Foundry & Supply Inc. (not to scale)	

STORM DRAIN
SOUTH JORDAN
UTAH
Settled 1859

SIDE VIEW

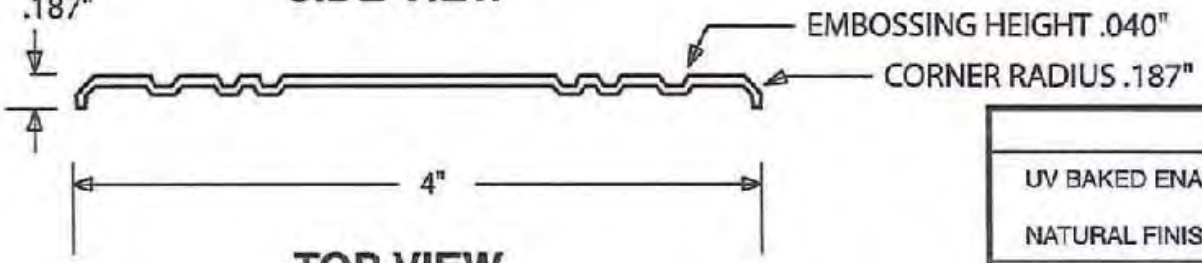

TOP VIEW

FINISH		
UV BAKED ENAMEL - 1-2 COLOR OPTION SAND BLASTED FRONT & REAR NATURAL FINISH FOR PAINT & ADHESIVE BONDING		
MATERIAL	**THICKNESS**	**WEIGHT**
304 ANNEALED STAINLESS STEEL	.062"	.218 LBS.
BRASS	.062"	.250 LBS.
ALUMINUM	.062"	.082 LBS.
ANODIZED ALUMINUM	.062"	.082 LBS.
LEGIBILITY WARRANTEE		
STAINLESS STEEL & BRASS -30 YEARS ALUMINUM & ANODIZED -15 YEARS		
U.S. & FOREIGN PATENTS PENDING		
OPTIONS		
SQUARE HOLE: 1/4" X 1/4" SERIAL NOS.: .250" HIGH, MAX. 6 DIGITS ENGRAVING COPY: 3 LINES, 30 CHARACTERS		

ART APPROVAL FORM

This is our interpretation of your artwork requirements. Review for accuracy and note any changes you wish to make before signing this approval form.
NOTE: This art approval request form is required to begin the manufacturing process.

Approved as is	Submit new art with changes	Date

PROPRIETARY AND CONFIDENTIAL
THE INFORMATION CONTAINED IN THIS DRAWING IS THE SOLE PROPERTY OF ALMETEK INDUSTRIES, INC., ANY REPRODUCTION IN PART OR AS A WHOLE WITHOUT THE WRITTEN PERMISSION OF ALMETEK INDUSTRIES, INC. IS PROHIBITED.

Customer: SOUTH JORDAN CITY
Job Name: STDM-9131-SSP
Date: AUGUST 29, 2007

SHEET 1 OF 1 SCALE 1:1

TOLERANCE
FRACTION ±1/8"
.XX ±.06"
.XXX ±.005"

ALMETEK
1-800-248-2080
Fax: 908-850-9618

Drawn by:	DATE	REV. # 2	DATE 11/16/07	REV. #	DATE	REV. #	DATE

Theft-Resistant Permanent Installations for Storm Drain Markers

30-Year Warranty*

For Stainless, Brass, Aluminum and Anodized Aluminum

WET CONCRETE INSTALLATION

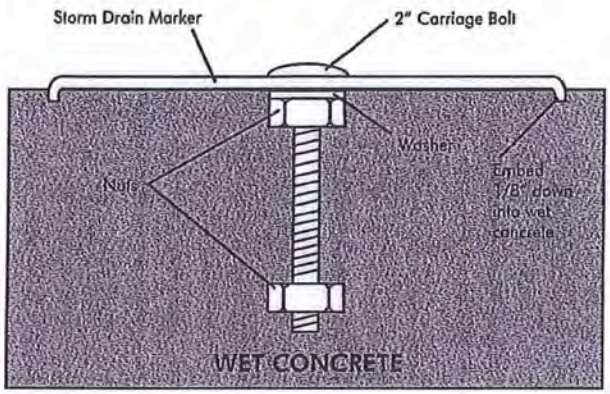

HARDWARE:

CB-2" Set:

- 1- 2" 1/4"-20 SS Carriage Bolt
- 1- 5/16"x5/8" O.D. x .062" thick SS Washer
- 2- 1/4"-20 UNC SS Nuts

BOLT-ON INSTALLATION

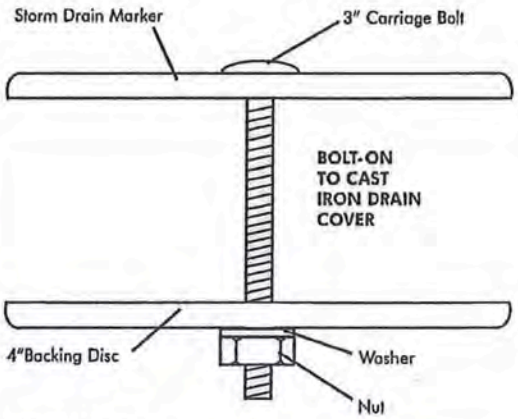

HARDWARE:

CB-3" Set:

- 1- 4" SS Backing Disc
- 1- 3" x 1/4"-20 SS Carriage Bolt
- 1- 5/16" x 5/8" O.D. x .062" thick SS Washer
- 1- 1/4"-20 UNC SS Nut

NOTE: All 4" Discs have square hole for carriage bolt insertion

* After the appropriate installation, if the Marker is stolen or missing, Almetek will replace the Marker and hardware at no cost.

SURFACE MOUNT INSTALLATION

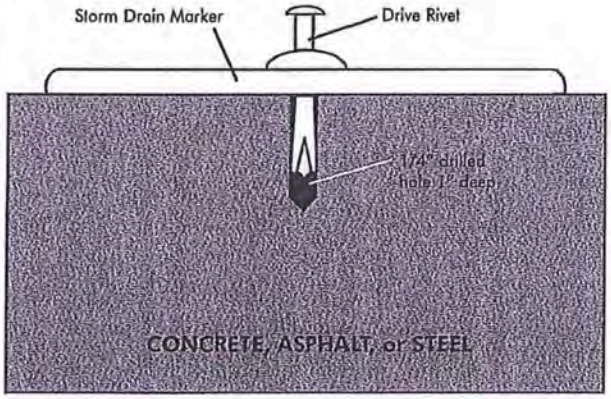

HARDWARE:

- 1-**DR250**-1/4" x 3/4" Drive Rivet-STDM
- 1-**DB250**-1/4" Carbide Drill Bit

Hammer (not supplied)

optional: adhesive

SUB-SURFACE MOUNT INSTALLATION

PATENT PENDING

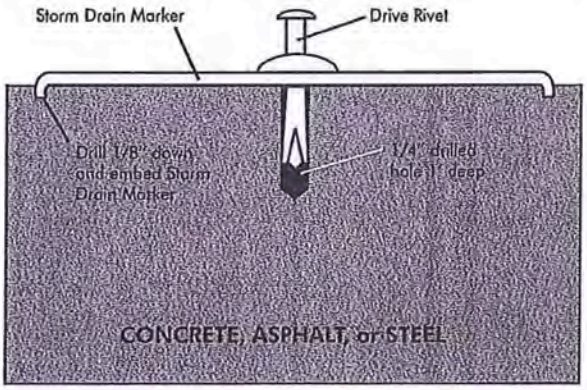

HARDWARE:

- 1-**DR250**-1/4" x 3/4" Drive Rivet- STDM
- 1-**CDB-4**-Carbide Drill Bit, Anchor, Pilot (not shown)

Hammer (not supplied)

optional: adhesive

Almetek Industries, Inc., 2 Joy Drive, Hackettstown, NJ 07840 • 908-850-9700 • Fax: 908-850-9618

www.almetek.com • email: csr@almetek.com

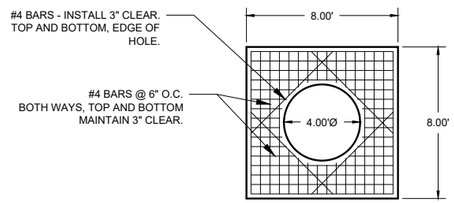

CONCRETE FOOTING

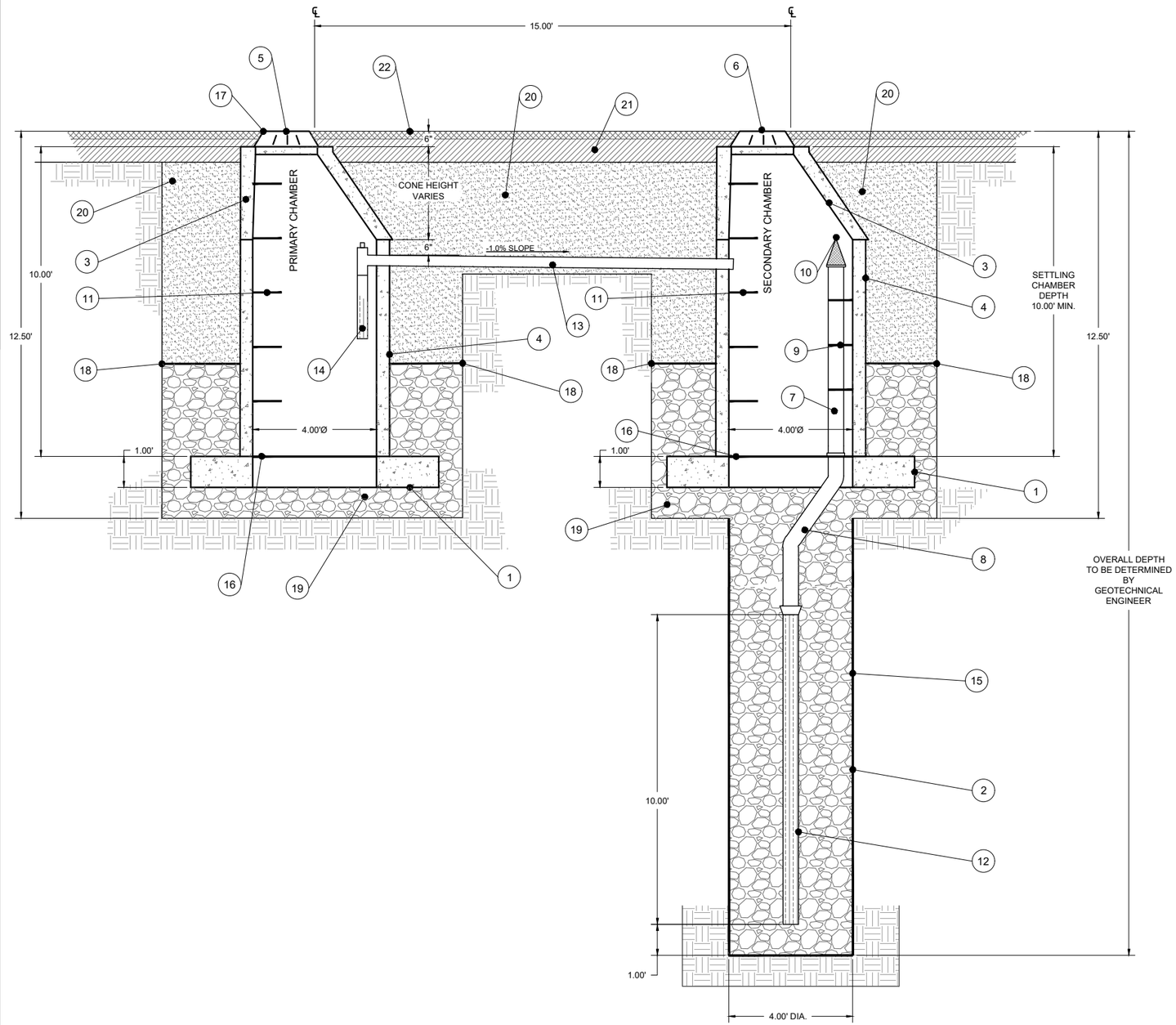

DRY WELL SYSTEM

KEYED NOTES

1. 8-FT X 8-FT X 1-FT REINFORCED CONCRETE FOOTING (SEE DETAIL)
2. MIN. 4' DRILLED SHAFT
3. MODIFIED FLAT-BOTTOM MANHOLE CONE
4. CONCRETE LINER, 4000 PSI 48" I.D. AND 54" O.D., CENTER IN HOLE WITH 2-FT X 2-FT OPENING IN BOTTOM FOR DRAINAGE
5. MIN. 30" DIA BOLTED CAST IRON RING AND GRATE
6. MIN. 30" DIA BOLTED CAST IRON RING AND SOLID SOUTH JORDAN CITY STORM DRAIN COVER
7. 6" DIA SCH 40 PVC OVERFLOW PIPE
8. 6" DIA DR-14 FUSED HDPE PIPE
9. SUPPORT BRACKET (TYP), FORMED 12 GA STEEL, FUSION BONDED EPOXY COATED
10. 6" DIA CONE SHAPED SCREEN
11. LADDER RUNGS
12. 6" DIA SLOTTED DR-14 FUSED HDPE PIPE
13. 4" DIA SCH 40 PVC CONNECTOR PIPE W/ VENTED ANTI-SIPHON INTAKE & FLOW REGULATOR, PIPE TO BE FULLY CAPPED UNTIL BASIN FULLY VEGETATED OR AS APPROVED BY CITY ENGINEER.
14. 4" DIA 1" LONG SLOTTED SCH 40 PVC INTAKE SCREEN
15. NON-WOVEN GEOTEXTILE FABRIC MIRFI 140 NL. OR APPROVED EQUALL. FABRIC TO BE DIAMETER OF HOLE, HELD APPROX 15' OFF THE BOTTOM OF EXCAVATION.
16. (2) LAYERS OF NON-WOVEN GEOTEXTILE FABRIC MIRAFI 140 NL. OR APPROVED EQUALL. PLACED AFTER OVERFLOW PIPE HAS BEEN INSTALLED
17. FABRIC SEAL, UV RESISTANT GEOTEXTILE. COVER GRATE UNTIL PAVING AND OR LANDSCAPING IS COMPLETE.
18. (2) LAYER OF FILTER FABRIC
19. 1" TO 1-1/2" WASHED ROCK
20. A1A TO A2.7 COMPACTED BACKFILL TO 96%
21. COMPACTED BASE MATERIAL
22. GRADED BASIN, CITY VAC TRUCK ACCESS TO BE PROVIDED AT A MIN HORIZONTAL DISTANCE OF 15' AND NO MORE THAN 8% INCLINE FROM EACH MANHOLE LID

NOTES

1. PRIMARY CHAMBER REQUIRED ON ALL DRY WELL SYSTEMS.
2. NO OUTSIDE PIPE CONNECTIONS TO PRIMARY OR SECONDARY CHAMBERS. ONLY SURFACE DRAINAGE IS ALLOWED
3. PERCOLATION TEST TO BE PERFORMED AFTER FINAL INSTALLATION OF DRY WELLS AND LANDSCAPING.

NO.	DATE	REVISION COMMENTS

SOUTHJORDAN CITY
1600 West Towne Center Dr. / South Jordan, UT 84095
Telephone: (801) 254-3742 / Web: WWW.SJC.UTAH.GOV

SOUTH JORDAN CITY
DRYWELL SYSTEM DETAIL
AND SPECIFICATIONS

Project No: ____ Drawn By: JWH Designed By: JWH
File Name: ____ Checked By: ____ Date: 1/7/16

4010
Sheet No.

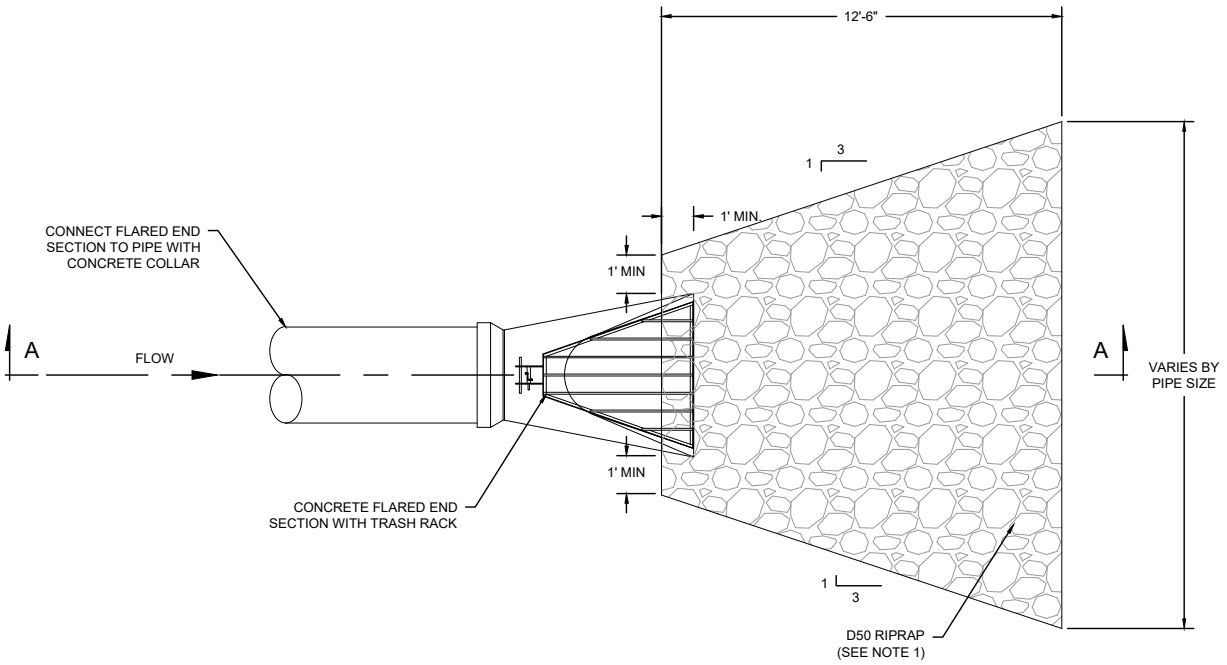

PLAN

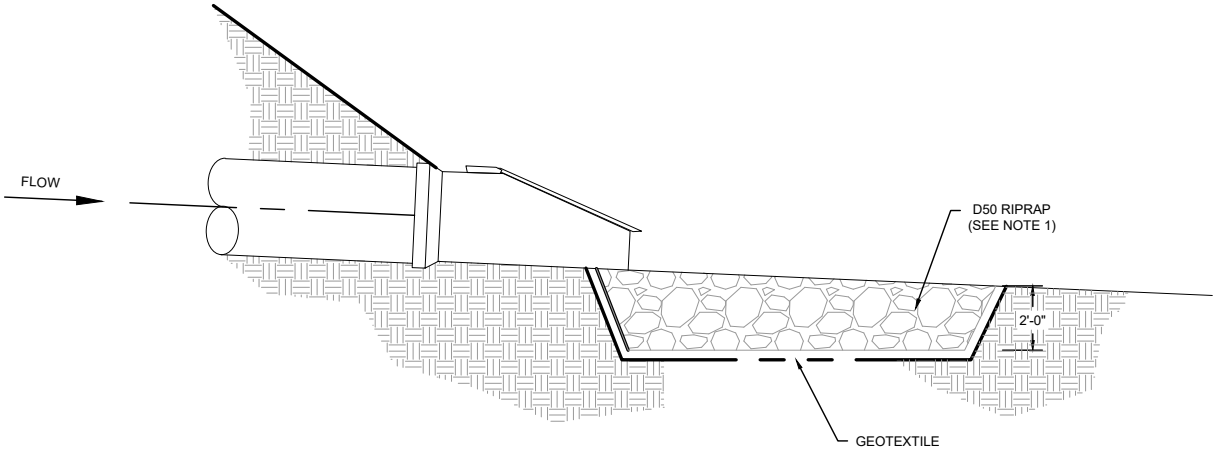

SECTION A

NOTES

1. RIPRAP TO BE 12-IN MIN FOR 18-IN PIPE AND 24-IN AND LARGER PIPE TO REQUIRE 18-IN MIN RIPRAP

PREPARED BY: _____

SOUTH JORDAN UTAH

SOUTH JORDAN CITY

DATE	REVISIONS	BY	DRAWN: JWH	RIPRAP APRON DETAIL	STANDARD DRAWING 4015
			DATE 2/21		

STREETS

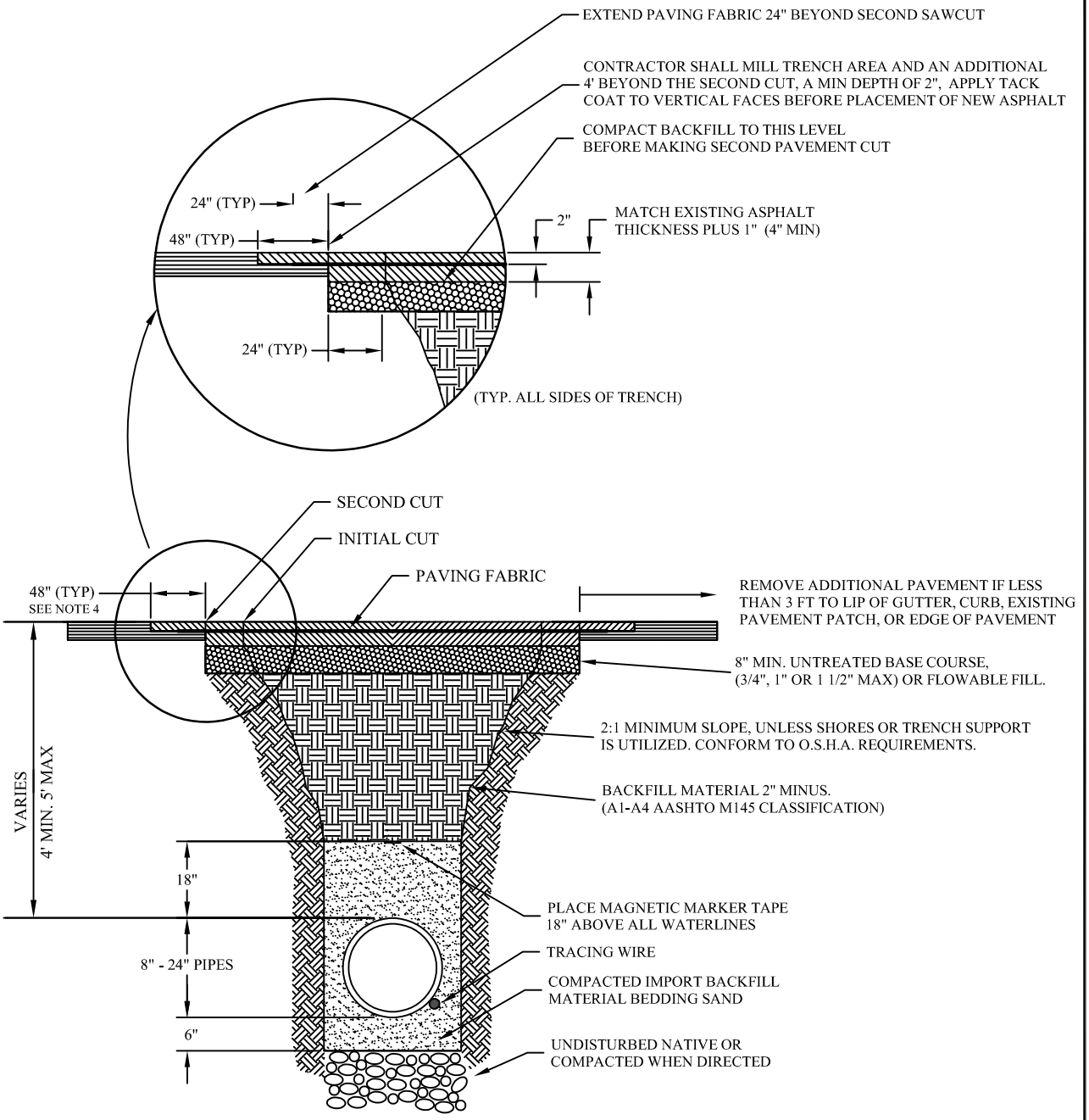

NOTES:
1. NO SAW CUTS TO END UP IN THE WHEEL PATH
2. AFTER THE SECOND CUT, PATCH TRENCH UP TO THE EXISTING ROAD SURFACE THEN MILL THE TRENCH AREA AND AN ADDITIONAL 4 FT BEYOND THE SECOND CUT OR AS DIRECT BY THE CITY ENGINEER ACCORDING TO CITY STANDARDS.
3. PAVING FABRIC PER APWA STANDARD ROADWAY PAVEMENT GEOTEXTILE, NON-WOVEN
4. IF THE OCI RATING OF THE ROAD IS BETWEEN 80 AND 100, THE 48" WILL BE INCREASED TO FULL WIDTH OF ROAD, OR AS DETERMINED BY THE CITY ENGINEER OR DESIGNEE.

PREPARED BY:_____

SOUTH JORDAN UTAH

SOUTH JORDAN CITY

DATE	REVISIONS	BY	DRAWN:	TRENCH CROSS SECTION TERMINOLOGY & STANDARD SIZES	STANDARD DRAWING
04/11		JRF	KS		3010
			DATE 1/06		

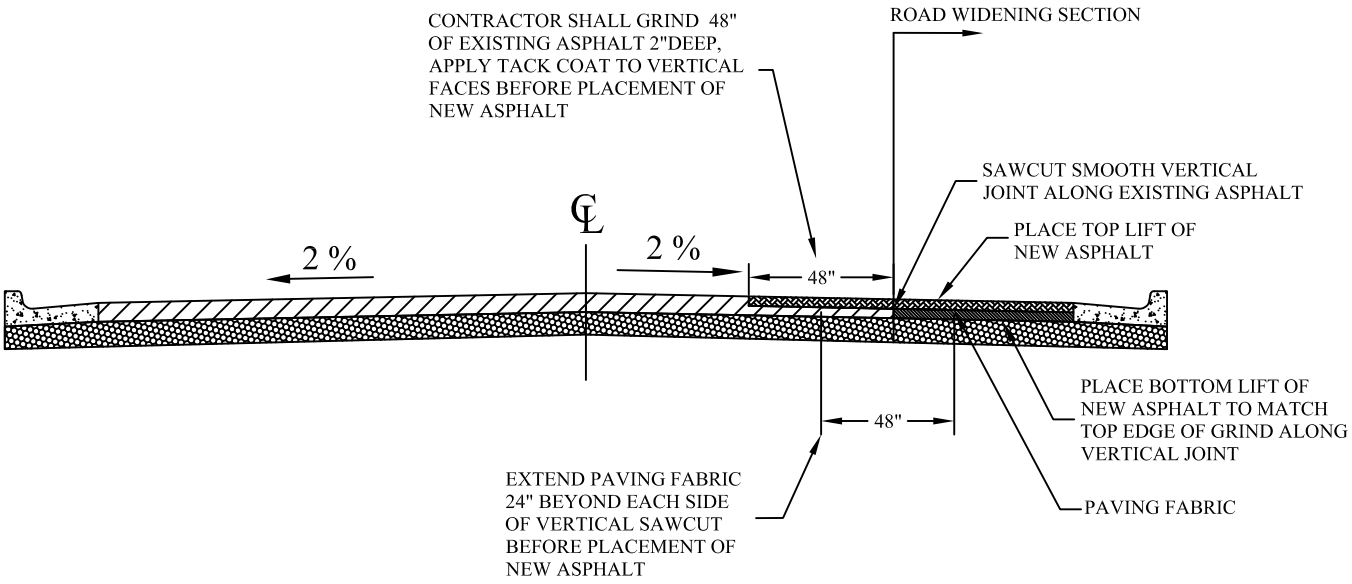

NOTE: PER CITY STREET REPAIR / REPAVING POLICY, IF CONSTRUCTION PLANS DO NOT REQUIRE REMOVAL OF EXISTING ROADWAY TO CENTERLINE CONTRACTOR SHALL JOIN NEW PAVEMENT PER THIS STANDARD

PREPARED BY: _____

SOUTH JORDAN UTAH

SOUTH JORDAN CITY

DATE	REVISIONS	BY	DRAWN: KS	ROAD WIDENING	STANDARD DRAWING
			DATE 1/06		3012

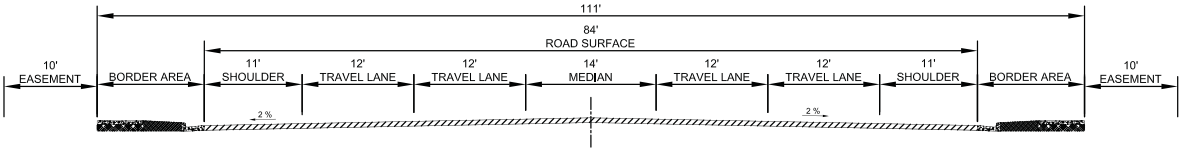

111-FOOT R.O.W. ARTERIAL
84' OF ROAD SURFACE

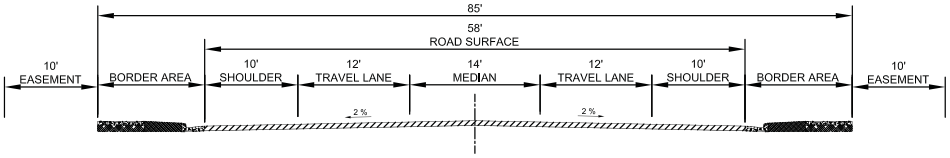

85-FOOT R.O.W. MAJOR COLLECTOR
58' OF ROAD SURFACE

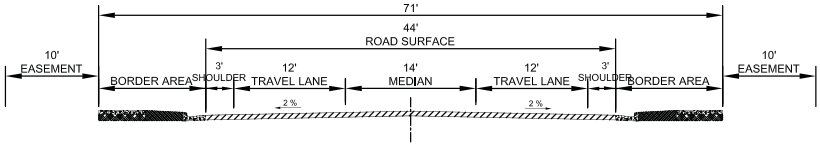

71-FOOT R.O.W. MINOR COLLECTOR
44' OF ROAD SURFACE

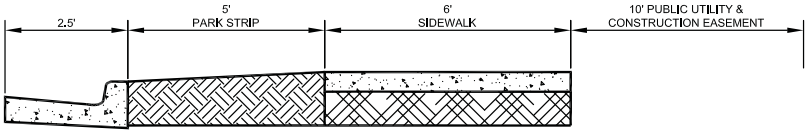

COLLECTOR BORDER AREA

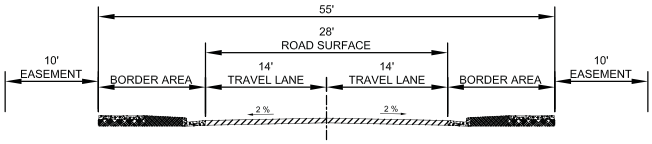

55-FOOT R.O.W. RESIDENTIAL
28' OF ROAD SURFACE

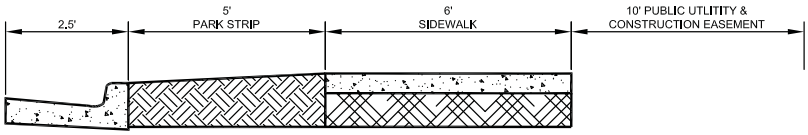

RESIDENTIAL BORDER AREA

Sheet No. 1 / 1

Project No. _____
Drawn by: TB Design by: MS
File Name: roadsections
Checked by: _____ Date: 1/8/00

Road Widths and Border Areas

SOUTH JORDAN UTAH
1175 South Redwood Road / South Jordan, UT 84095
Telephone: (801) 254-3742 / Fax: (801) 254-3393

NO.	DATE	REVISION COMMENTS

EXHIBIT A

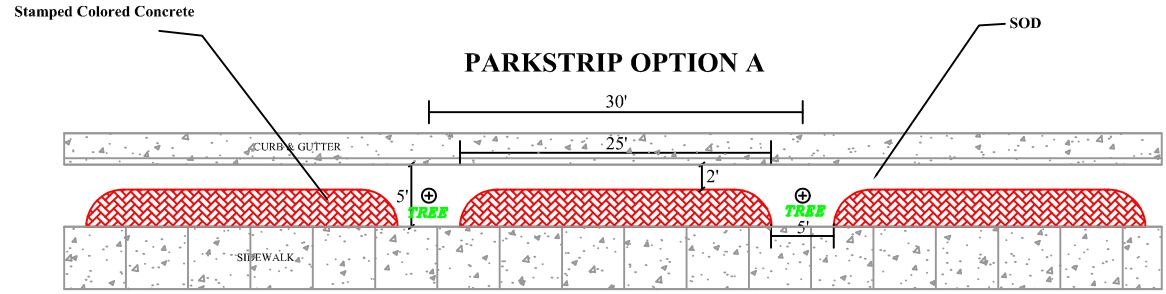

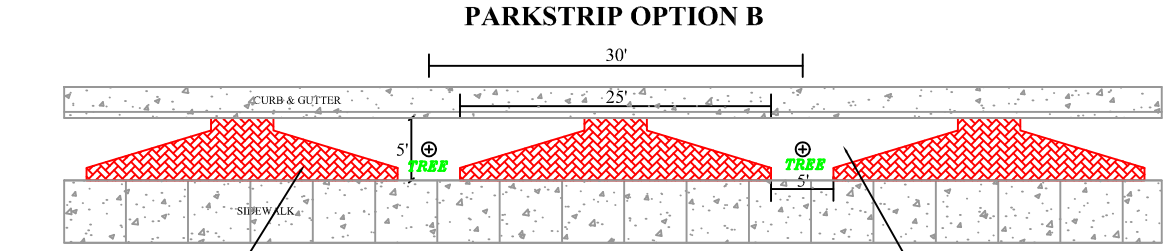

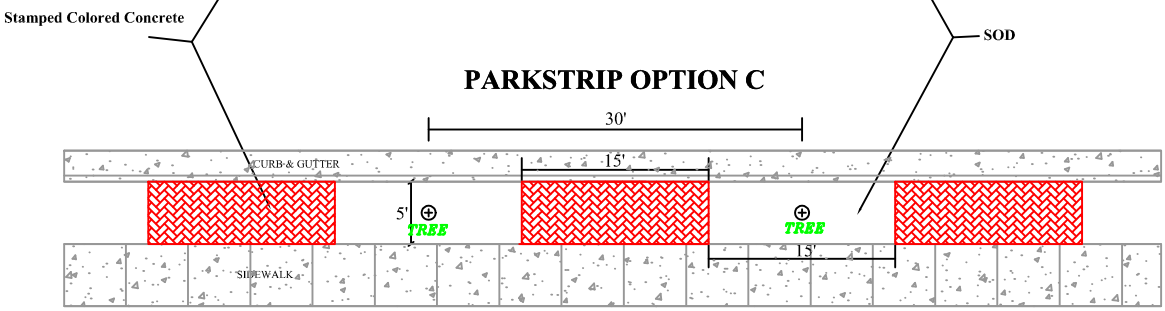

NOTE: ALL PLANTED AREAS MUST BE EQUIPPED WITH AN IRRIGATION SYSTEM.

DETAIL FOR ALL TREES, SOD, IRRIGATION SYSTEM AND CONCRETE TO BE SUBMITTED FOR REVIEW AND APPROVED BY THE CITY PRIOR TO INSTALLATION. STAMPED CONCRETE WILL BE COLORED DARK RED OR GREY AND SEALED.

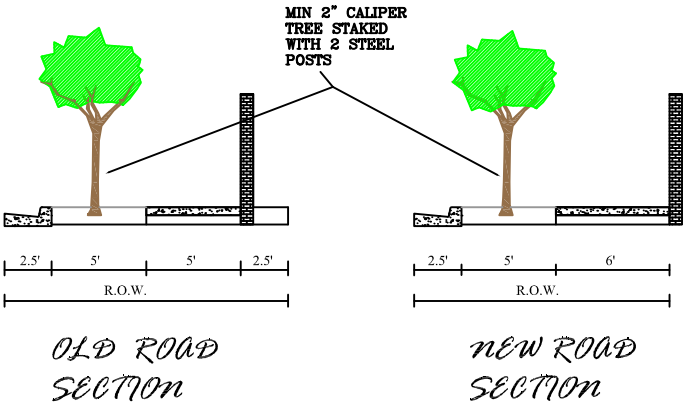

Sheet No. 1 / 1

Project No.
Drawn by: CC Design by: CL
File Name: PROPOSEDPARKSTRIPS
Checked by: Date: 10/17/02

SINGLE FAMILY REAR AND SIDE PARKSTRIPS ON COLLECTOR STREETS

SOUTH JORDAN UTAH
10996 South Redwood Road / South Jordan, UT 84095
Telephone: (801) 253-5230 / Fax: (801) 253-0617

NO.	DATE	REVISION COMMENTS

South Jordan City Sign Post, Sign Hardware Standard Drawing

For minimum sign dimensions and letter heights refer to section 7.7.C. of the South Jordan City Construction Standards and Specifications

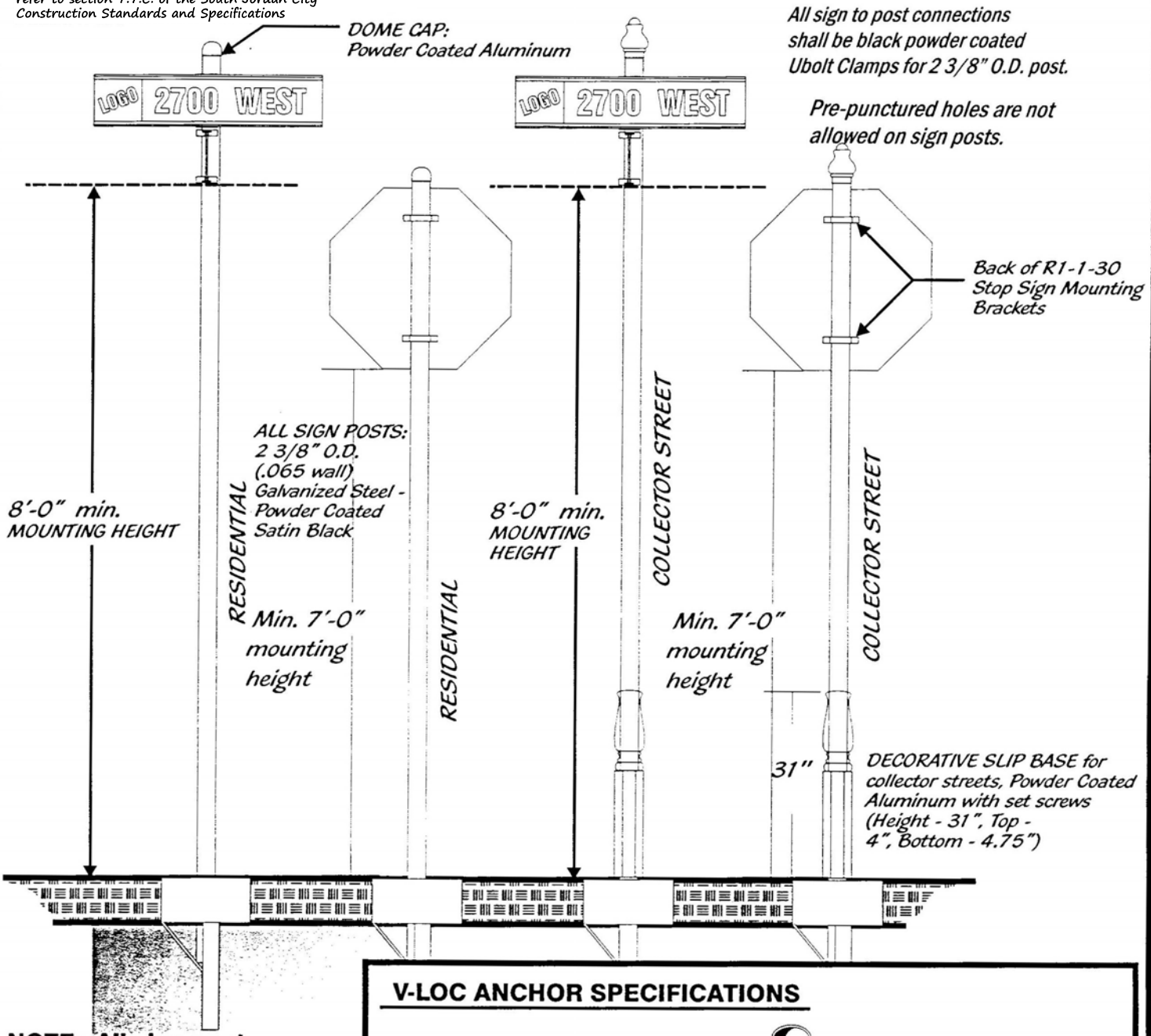

NOTE: All sign post material shall meet the following: Post material ASTM-A653, G90, HSLAS, Type B, 55,000 min Y.S. and 70,000 T. S. , approved by F.H.W.A. and ASHTO under current NCHRP Report #350.

Post, cap and decorative base to be powder coated satin black.

V-LOC ANCHOR SPECIFICATIONS

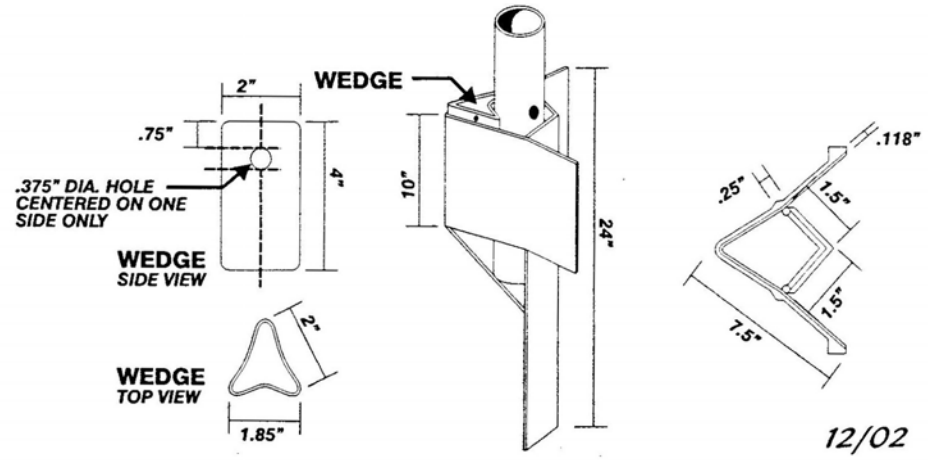

12/02

SLIPBASE DETAIL FOR RAISED ISLAND

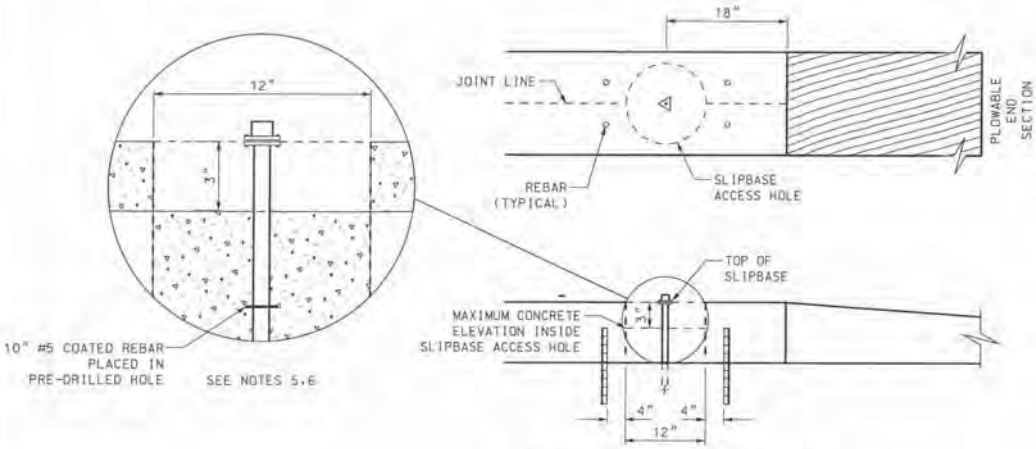

SLIPBASE DETAIL FOR SIDEWALK

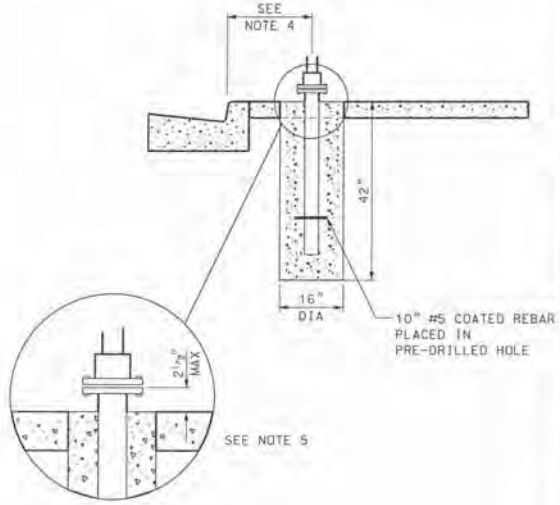

SLIPBASE GROUND STUB FOUNDATION DETAIL

APPLIES TO SINGLE AND DOUBLE POST APPLICATIONS

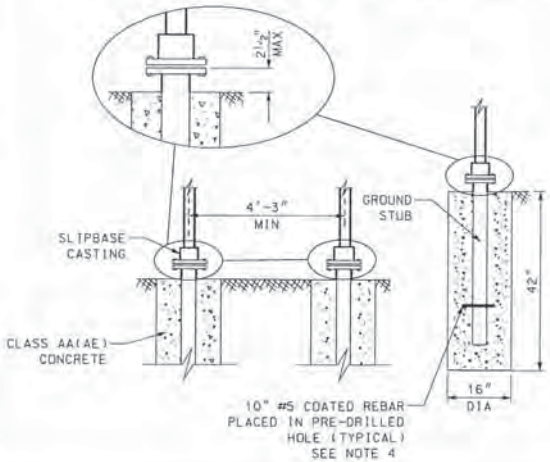

POST SELECTION GUIDE SINGLE POST APPLICATION

SIGN HEIGHT (FT)	SIGN WIDTH (FT) 2	2.5	3	4	5
1				P3	P3
2				P3	P3
2.5				P3	P3
3				P4	P4
4			P3	P4	P4	P5
5		P3	P3	P4	P4	P5
6		P3	P3	P4	P5	P5
7		P3	P3	P4	P5	

"T" OR "U" BRACKET RECOMMENDED FOR SIGNS GREATER THAN 4 FEET WIDE

POST SELECTION GUIDE DOUBLE POST APPLICATION

SIGN HEIGHT (FT)	SIGN WIDTH (FT) 5	6	7	8	9	10
4		P4	P4	P4	P5	P5
5		P4	P5	P5	P5	P5
6		P4	P5	P5	P5	P5
7	P4	P5	P5	P5	P5	
8	P5	P5	P5	P5		

NOTES:

1. REFER TO STD DWG SN 10A FOR POST REQUIREMENTS.
2. REFER TO STD DWG SN 13 SERIES FOR MOUNTING AND HARDWARE REQUIREMENTS.
3. WHEN INSTALLING A SUPPLEMENTAL SIGN DO NOT EXCEED MAXIMUM SQUARE FOOTAGE OF SINGLE POST APPLICATION BY MORE THAN 25%. (EX: POST P5 MAX. SIGN SIZE 5'W x 6'H= 30 SQ.FT.+ 25%=37½ SQ.FT.=(5'Wx6'H)+(3'Wx2.5'H)=37½).
4. REFER STD DWG SN 7A FOR HEIGHT AND OFFSET REQUIREMENTS.
5. CORE DRILL SLIPBASE HOLE. INSTALL AFTER PLACEMENT OF FINISHED GRADE OF CONCRETE OR ASPHALT.
6. ISLAND INSTALLATION: PLACE TOP OF SLIPBASE STUB FLUSH WITH TOP OF THE ISLAND, WITH A TOLERANCE OF ± ⅛" (DO NOT PLACE BELOW TOP OF CURB).

NO.	DATE	APPR.	REVISIONS	REMARKS

UTAH DEPARTMENT OF TRANSPORTATION
STANDARD DRAWINGS FOR ROAD AND BRIDGE CONSTRUCTION

RECOMMENDED FOR APPROVAL — JAN.01.2008 DATE
CHAIRMAN STANDARDS COMMITTEE
APPROVED — JAN.01.2008 DATE
DEPUTY DIRECTOR

STANDARD DRAWING TITLE
SLIPBASE
SIGN BASE (B3)
INSTALLATION

STD DWG
SN 10B

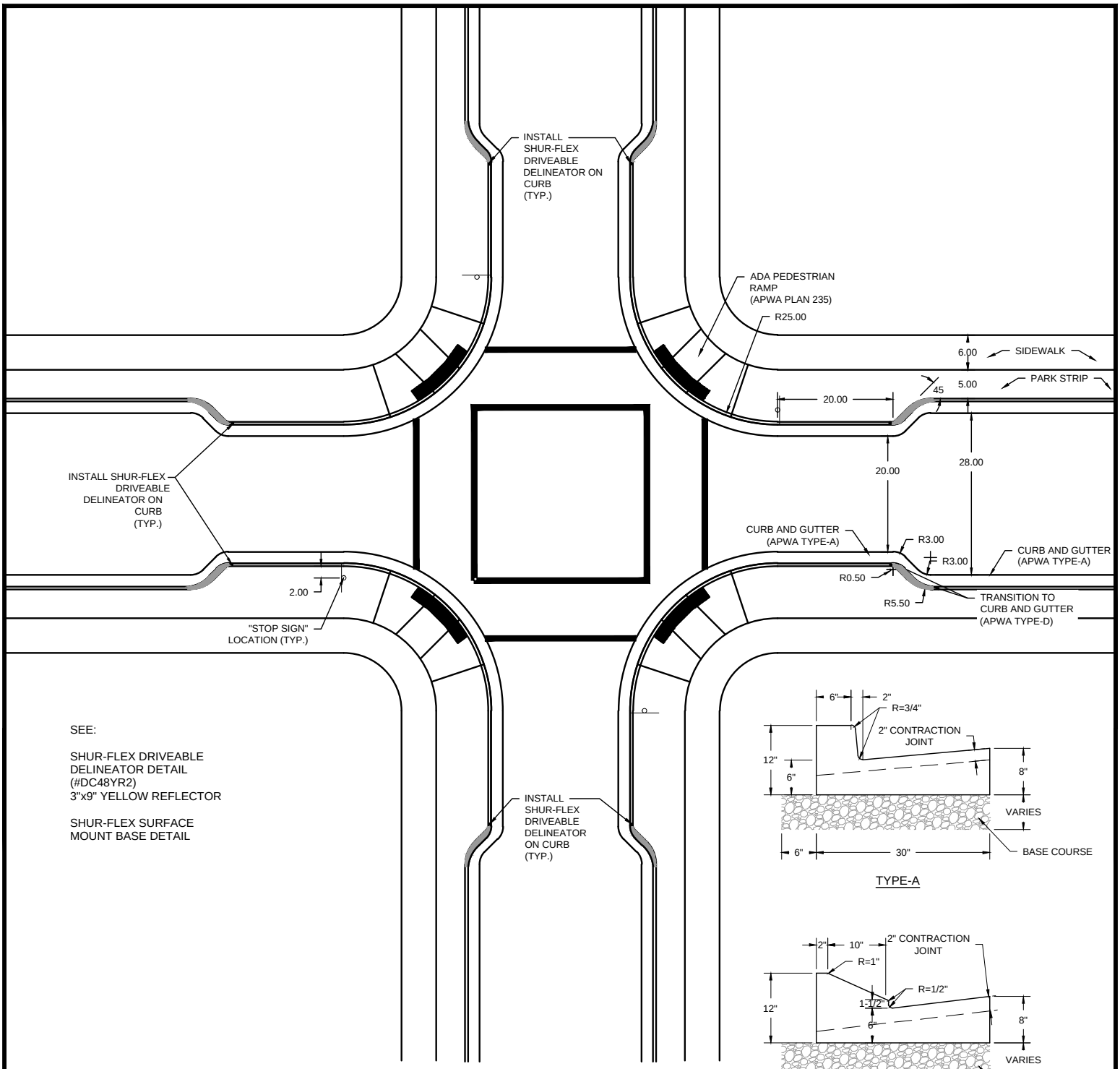

SEE:

SHUR-FLEX DRIVEABLE DELINEATOR DETAIL (#DC48YR2) 3"x9" YELLOW REFLECTOR

SHUR-FLEX SURFACE MOUNT BASE DETAIL

TYPE-A

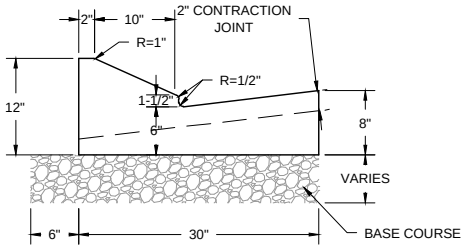

TYPE-D

NOTE:
PEDESTRIAN CURB EXTENSIONS MAY BE REQUIRED BY THE CITY ENGINEERING DEPARTMENT. DESIGN OF CURB EXTENSIONS MUST BE APPROVED BY CITY ENGINEER PRIOR TO INSTALLATION. CURB EXTENSIONS MAY BE CONSIDERED AS A TRAFFIC CALMING MEASURE OR TO ENHANCE THE SAFETY OF PEDESTRIAN CROSSINGS.

SOUTH JORDAN UTAH
1600 West Towne Center Dr. / South Jordan, UT 84095
Telephone: (801) 254-3742 / Fax: (801) 253-5235

Project No.

Drawn by: JWH Design by: JWH

File Name:

Checked by: JN Date: 1/8/20

SOUTH JORDAN CITY
CURB EXTENSION- TYPICAL DETAIL

DT-01

Sheet No.

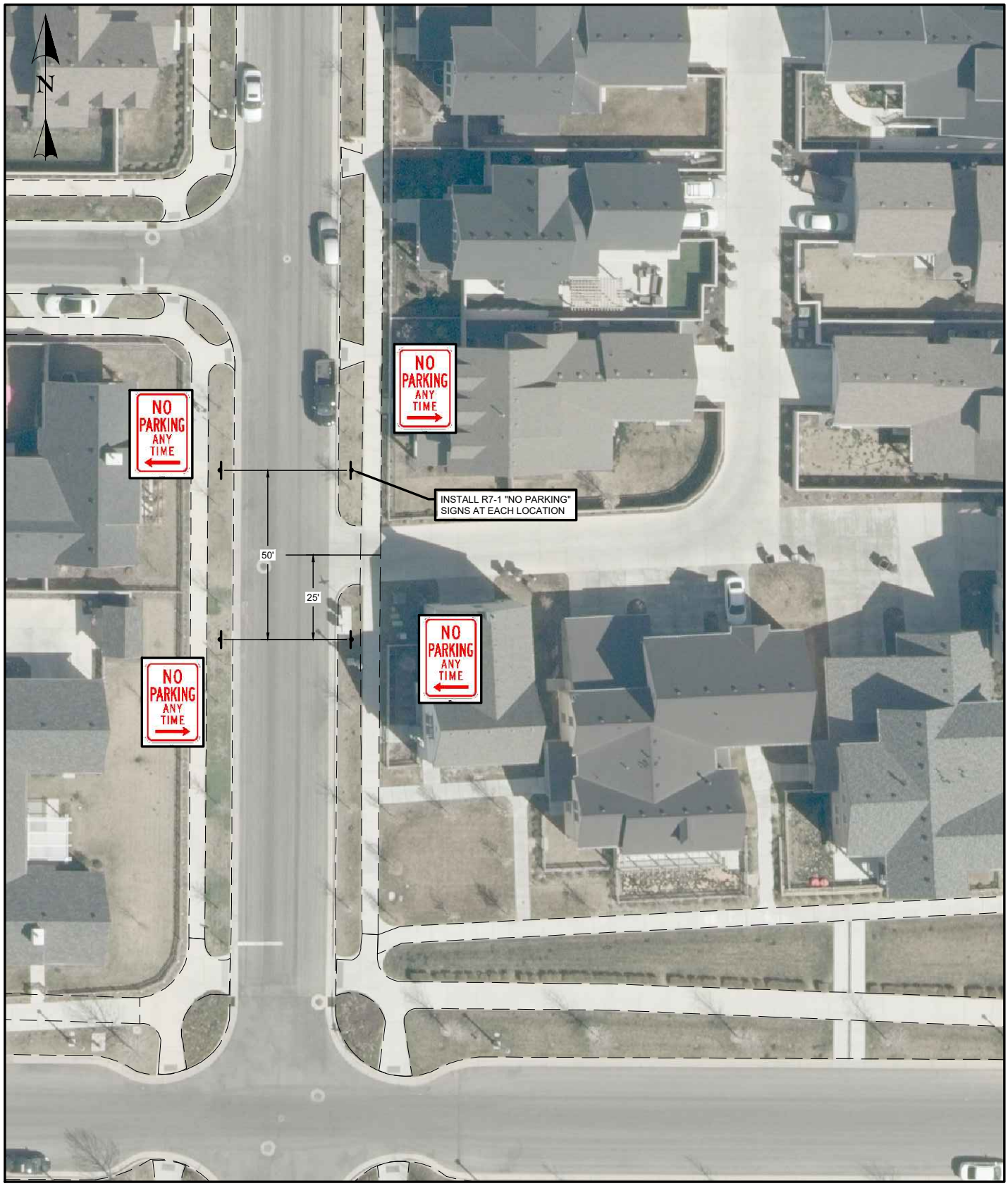

Applicable at the entrance to dead end alleyways and lanes, that form a T intersection.

SOUTH JORDAN
UTAH
1600 West Towne Center Dr. / South Jordan, UT 84095
Telephone: (801) 254-3742 / Fax: (801) 253-5235

Project No. _____
Drawn by: _____ Design by: _____
File Name: _____
Checked by: _____ Date: _____

Signage for Garbage Routes - No Parking Areas -

STANDARD DRAWING

3020

Sheet No.

SHUR-FLEX® DRIVEABLE DELINEATOR DETAIL

(#DC48YR2)

3" X 9" YELLOW REFLECTOR

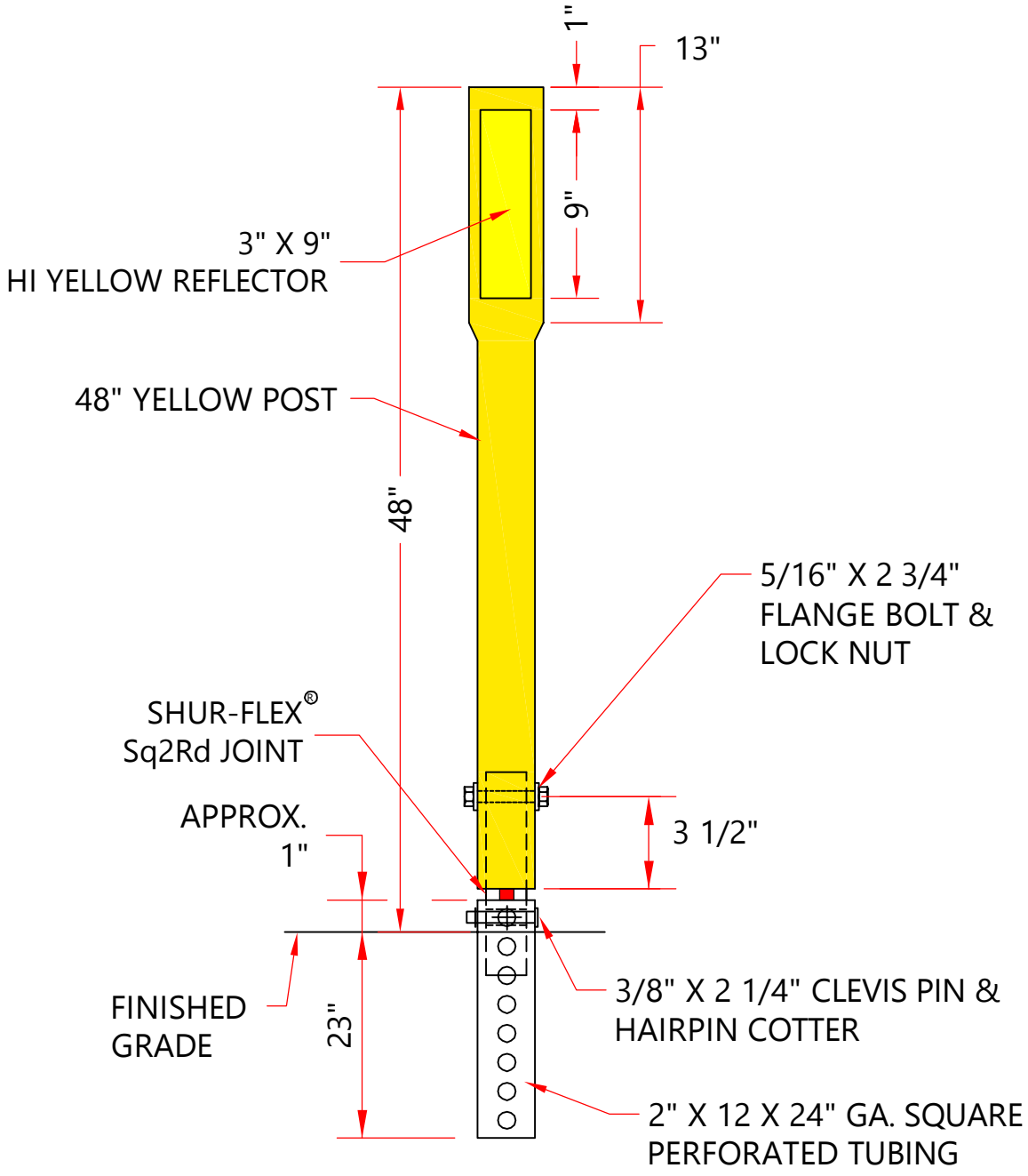

PAT# 7,722,286

SHUR-TITE® PRODUCTS P.O. BOX 2283 ROUND ROCK, TEXAS 78680 (512)218-9500	TYPE: SHUR-FLEX® DRIVEABLE DELINEATOR DETAIL	DRAWN BY: CSC	ITEM #: DC48YR2	
		CHECKED BY: DWH	DATE: 08/24/20	SHEET: 1 / 1

SHUR-TITE\SHUR-FLEX DRIVEABLE\DC48YR2 082420.dwg, 8/24/2020 10:08:23 AM

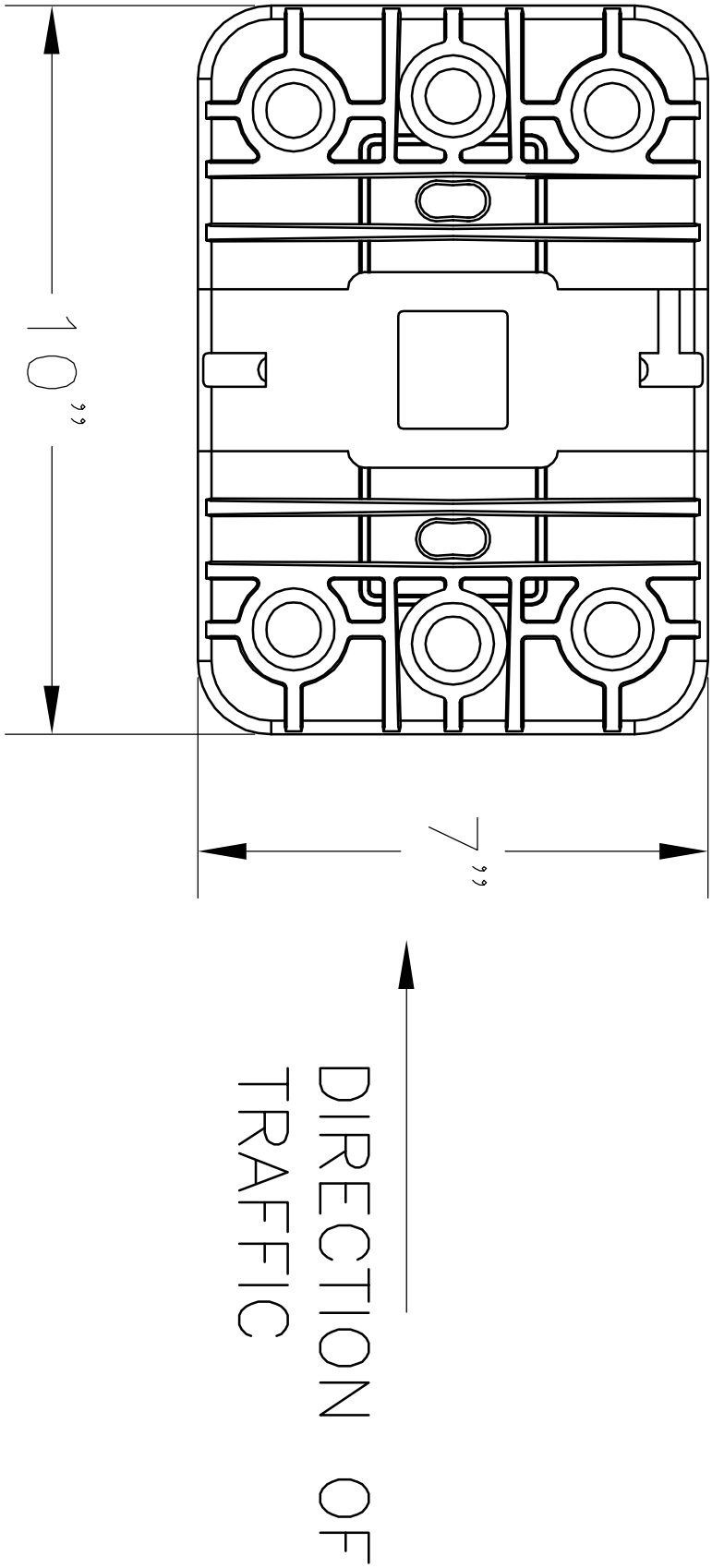
7"
10"
DIRECTION OF
TRAFFIC

STREET LIGHTS

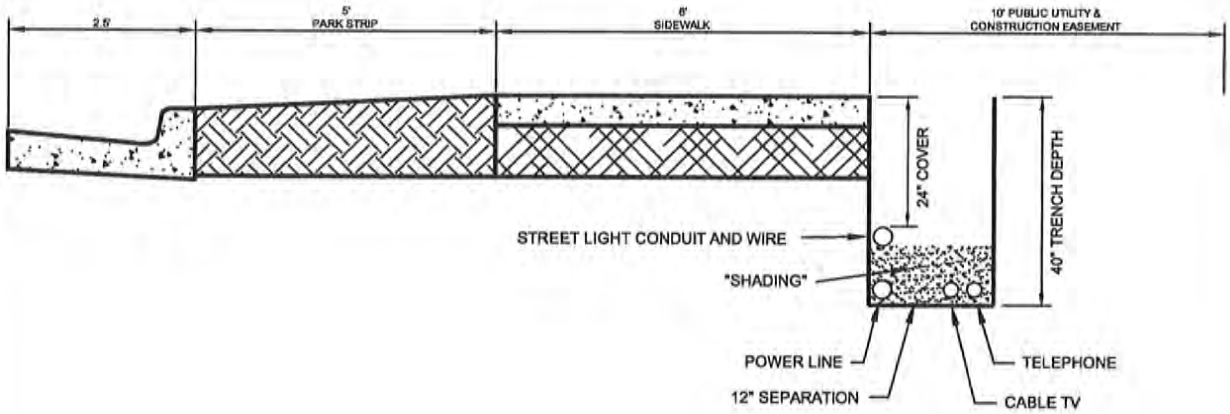

UTILITY TRENCH DETAIL

Not to Scale

Sheet No. 1 / 1	Project No. ____ Drawn by: SG Design by: ____ File Name: Utility Trench Detail Checked by: ____ Date: 3/02/07	Standard Utility Trench Detail	SOUTH JORDAN		NO. / DATE / REVISION COMMENTS

MADE
IN USA
SOUTH JORDAN
Electric
LIFT
HERE

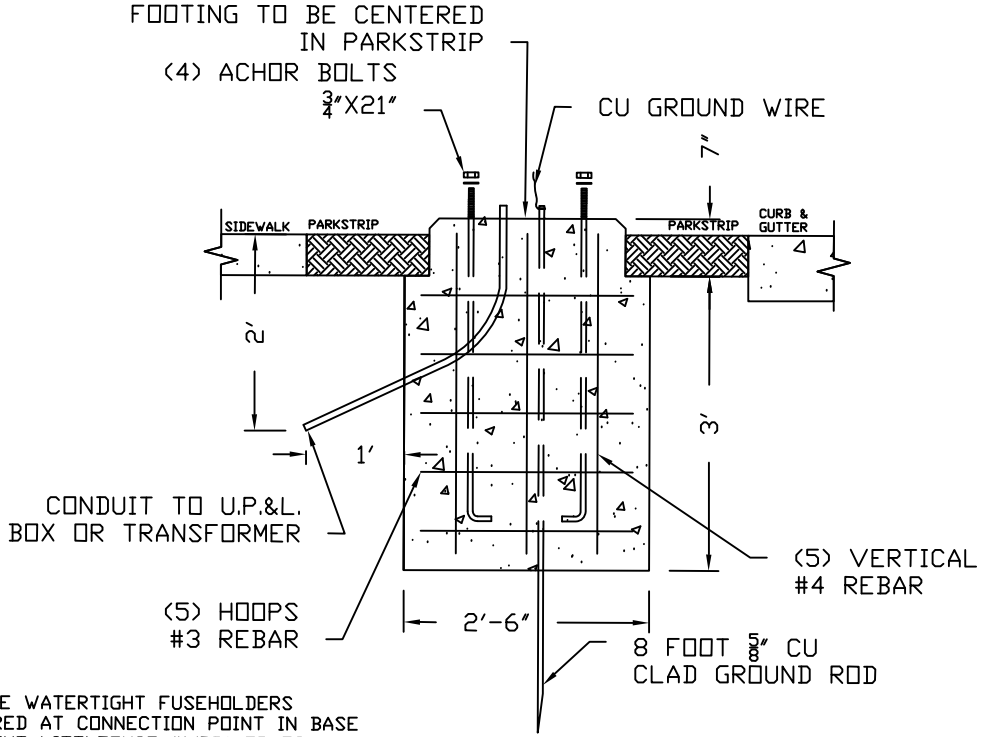

NOTE:
IN-LINE WATERTIGHT FUSEHOLDERS
REQUIRED AT CONNECTION POINT IN BASE
OF LIGHT LITTLEFUSE #WPB1 OR EQUAL.

LIGHT PEDESTAL DETAIL

SCALE: N.T.S.

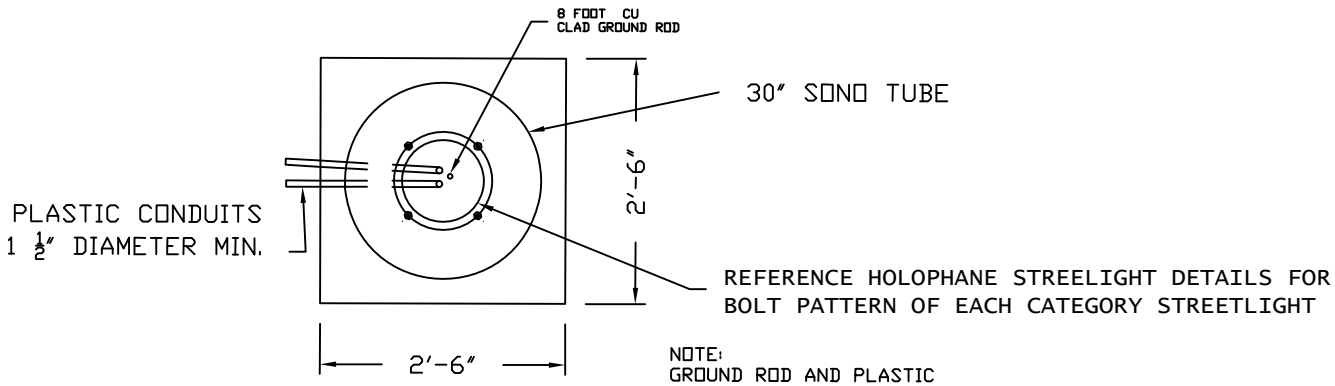

PLAN VIEW

SCALE: N.T.S.

NOTE:
GROUND ROD AND PLASTIC
CONDUITS MUST BE LOCATED
WITHIN A 3" RADIUS FROM THE
CENTER OF BOLT CIRCLE.

NO.	DATE	REVISION COMMENTS

SOUTH JORDAN
UTAH
1175 South Redwood Road | South Jordan, UT 84095
Telephone: (801) 254-3742 | Fax: (801) 254-3393

Streetlight Pedestal
Category 1, 2, 3 & 4

Project No. ____
Drawn by: CR
Design by: CR
File Name: ____
Checked by: ____
Date: ____

1/1
Sheet No.

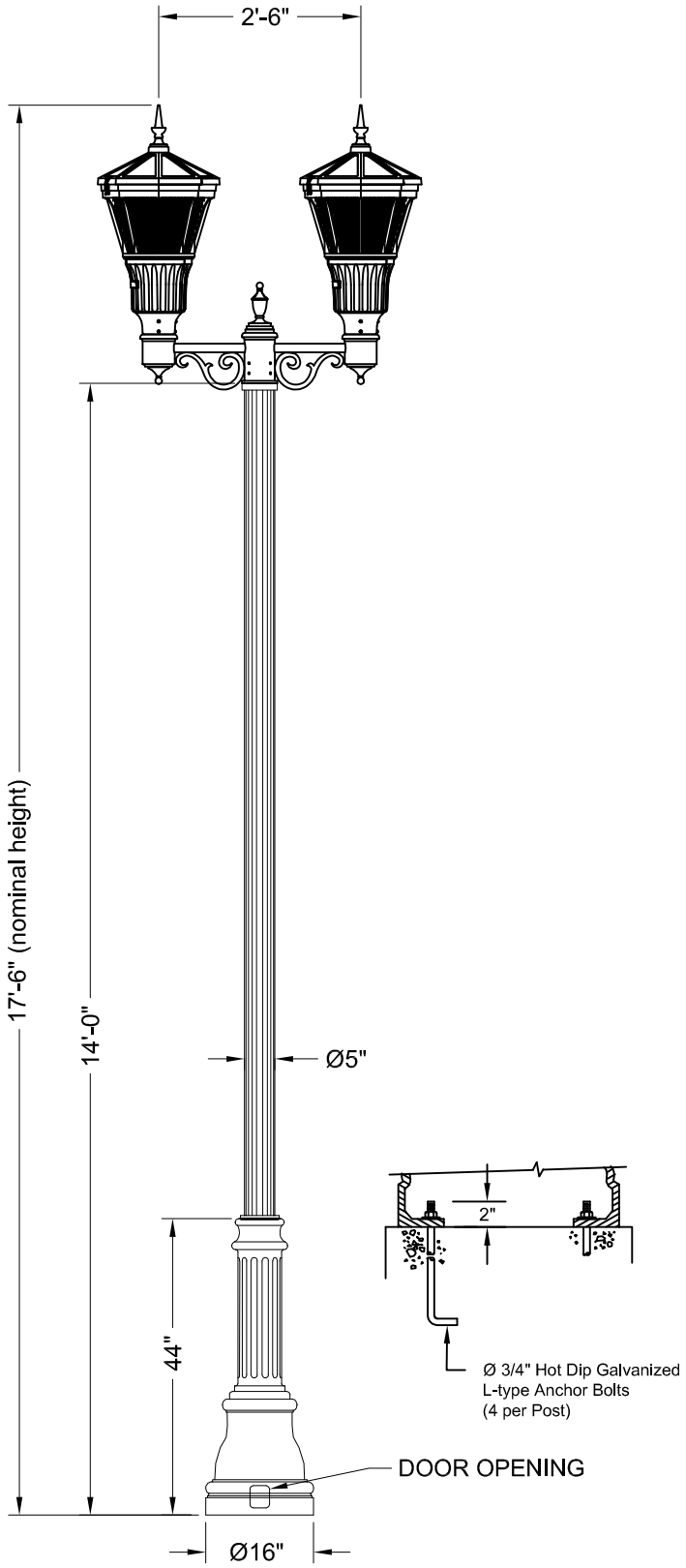

Specifications

POST DESCRIPTION
The lighting post shall be aluminum, one-piece construction, with a classic fluted base design. The shaft shall be Ø5" fluted.

MATERIALS
The base shall be heavy wall, cast aluminun produced from certified ASTM 356.1 ingot per ASTM B-179-95a or ASTM B26-95. The straight shafts shall be extruded from aluminum, ASTM 6061 alloy, heat treated to a T6 temper. All hardware shall be tamper resistant stainless steel. Anchor bolts to be hot dip galvanized.

CONTSTRUCTION
The shaft shall be double welded to the base casting and shipped as one piece for maximum structural integrity. The shaft shall be circumferentially welded inside the base casting at the top of the access door, and externally where the shaft exits the base. All exposed welds below 8' shall be ground smooth. All welding shall be per ANSI?AWS D1.2-90. All welders shall be certified per Section 5 of ANSI/AWS D1.2-90.

DIMENSIONS
The post shall be 14'-0" in height with an 16" diameter base. The shaft diameter shall be 5". At the top of the post, a tenon with a transitional donut shall be provided for arm mounting.

INSTALLATION
The post shall use four L-type anchor bolts installed on an Ø12" bolt circle. A door shall be provided in the base for anchorage and wiring access. A gounding screw shall be provided inside the base opposite the door.

FINISH
The assembly shall be Holophane black powder coat

LUMINAIRE
- Utility Arlington LED
- 100W 4k CCT
- Auto-sensing 120-277V
- Asymmetric Glass Refractor, Spike Finial
- NEMA Twistlock Photocontrol Receptacle
- 25' Prewired Leads
- DTL Solid State Photocontrol 120-277V

For complete specifications see LUM_ARUE.

OPTICAL SYSTEM
Refractor is a thermal resistant borosilicate glass lens to provide an I.E.S. Type III distribution. Acrylic and polycarbonate lens are not acceptable. The optical system in conjunction with a polished reflector and LED circuit board with dedicated heat sink create a sealed optical compartment.

ELECTRICAL MODULE
Alll of the electrical components are mounted on one steel plate that is removable for ease of maintenance.

Anchorage Detail

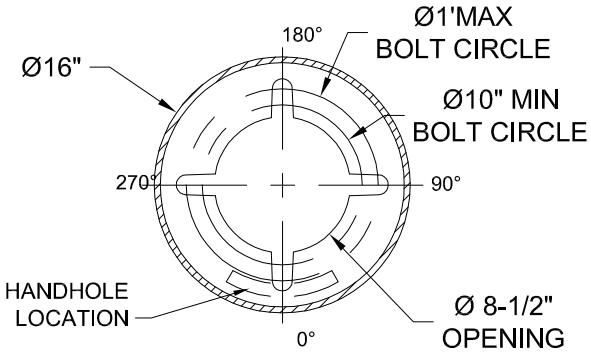

Catalog #'s:
ARUE1004KASG3BSHL25PCS - CSC30CABKH - CHA14F5J16P05ABGBK

Customer Signiture

HOLOPHANE®
LEADER IN LIGHTING SOLUTIONS
An AcuityBrandsCompany

South Jordan Category 1a

ORDER #:	TYPE: Cat 1A	DRAWING #: TSG 007077
REVISION:	REVISION DATE:	
DRAWN: ACH	ORIGIN DATE:	PAGE: 1 of 1

THIS DRAWING, WHEN APPROVED, SHALL BECOME THE COMPLETE SPECIFICATION FOR THE MATERIAL TO BE FURNISHED BY HOLOPHANE ON THE ORDER NOTED ABOVE. A UNIT OF SIMILAR DESIGN MAY BE SUPPLIED, BUT ONLY AFTER APPROVAL BY THE CUSTOMER IN WRITING. ON POLE ORDERS AN ANCHOR BOLT TEMPLATE PRINT WILL BE SUPPLIED WITH EACH ANCHOR BOLT ORDER TO MATCH THE POLE PROVIDED. THIS PRINT IS THE PROPERTY OF HOLOPHANE AND IS LOANED SUBJECT TO RETURN UPON DEMAND AND UPON EXPRESS CONDITION THAT IT WILL NOT BE USED DIRECTLY OR INDIRECTLY IN ANY WAY DETRIMENTAL TO OUR INTERESTS, AND ONLY IN CONNECTION WITH MATERIAL FURNISHED BY HOLOPHANE.

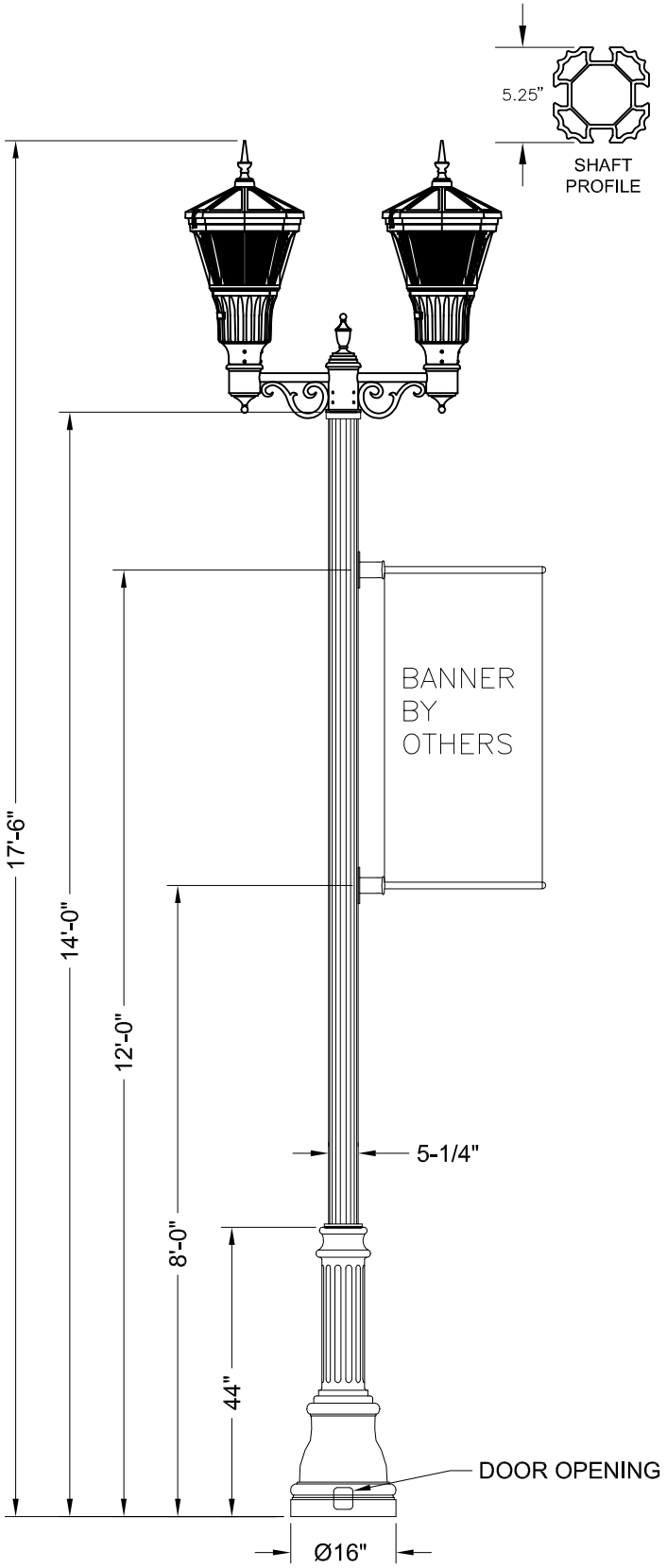

Specifications

POST DESCRIPTION
The lighting post shall be aluminum, one-piece construction, with a classic fluted base design. The shaft profile will consist of 4 mounting tracks and internal passages as shown.

MATERIALS
The base shall be heavy wall, cast aluminum produced from certified ASTM 356.1 ingot per ASTM B-179-95a. The straight shafts shall be extruded from aluminum, ASTM 6061 alloy, heat treated to a T6 temper. All hardware shall be tamper resistant stainless steel. Anchor bolts to be hot dip galvanized.

CONSTRUCTION
The shaft shall be double welded to the base casting and shipped as one piece for maximum structural integrity. The shaft shall be circumferentially welded inside the base casting at the top of the access door, and externally where the shaft exits the base. All exposed welds below 8' shall be ground smooth. All welding shall be per ANSI/AWS D1.2-90. All welders shall be certified per Section 5 of ANSI/AWS D1.2-9.0

DIMENSIONS
The post shall be 14'-0" in height with a 16" diameter base. The shaft diameter shall be 5" at the top of the post, a tenon with a transitional donut shall be provided for arm mounting.

INSTALLATION
The post shall use four L-type anchor bolts installed on a 12" bolt circle. A door shall be provided in the base for anchorage and wiring access. A grounding screw shall be provided inside the base opposite the door.

FINISH
The assembly shall be Holophane black powder coat
LUMINAIRE DESCRIPTION
-Utility Arlington LED
-100W 4K CCT
-Auto-Sensing 120-277v
-Asymmetric Glass Refractor, Spike Finial
-NEMA Twistlock Photocontrol Receptacle
-25' Prewired Leads
-DTL Solid State Photocontrol 120-277v

OPTICAL SYSTEM
Refractor is a thermal resistant borosilicate glass lens to provide an I.E.S. Type III distribution. Acrylic and polycarbonate lens are not acceptable. The optical system in conjunction with a polished reflector and LED circuit board with dedicated heat sink create a sealed optical compartment.

ELECTRICAL MODULE
All of the electrical components are mounted on one steel plate that is removable for ease of maintenance.

Anchorage Detail

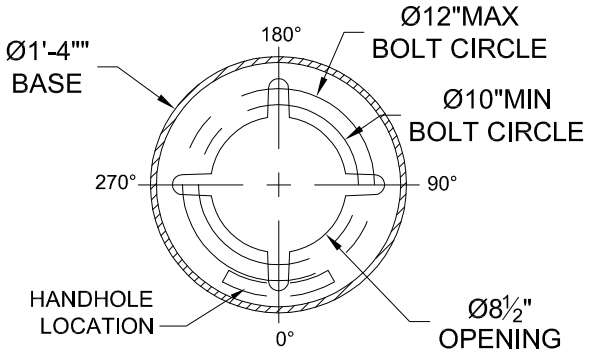

Catalog #'s:
ARUE1004KASG3BSHL25PCS - CSC30CABKH-CHA14L5J16P05ABGBK-BA24L45A4BK

Customer Signiture

HOLOPHANE®
LEADER IN LIGHTING SOLUTIONS
An AcuityBrandsCompany

South Jordan Category 1b

ORDER #:	TYPE: Cat 1b	DRAWING #: TSG 002636
REVISION:	REVISION DATE:	
DRAWN:	ORIGIN DATE:	PAGE: 1 of 1

THIS DRAWING, WHEN APPROVED, SHALL BECOME THE COMPLETE SPECIFICATION FOR THE MATERIAL TO BE FURNISHED BY HOLOPHANE ON THE ORDER NOTED ABOVE. A UNIT OF SIMILAR DESIGN MAY BE SUPPLIED, BUT ONLY AFTER APPROVAL BY THE CUSTOMER IN WRITING. ON POLE ORDERS AN ANCHOR BOLT TEMPLATE PRINT WILL BE SUPPLIED WITH EACH ANCHOR BOLT ORDER TO MATCH THE POLE PROVIDED. THIS PRINT IS THE PROPERTY OF HOLOPHANE AND IS LOANED SUBJECT TO RETURN UPON DEMAND AND UPON EXPRESS CONDITION THAT IT WILL NOT BE USED DIRECTLY OR INDIRECTLY IN ANY WAY DETRIMENTAL TO OUR INTERESTS, AND ONLY IN CONNECTION WITH MATERIAL FURNISHED BY HOLOPHANE.

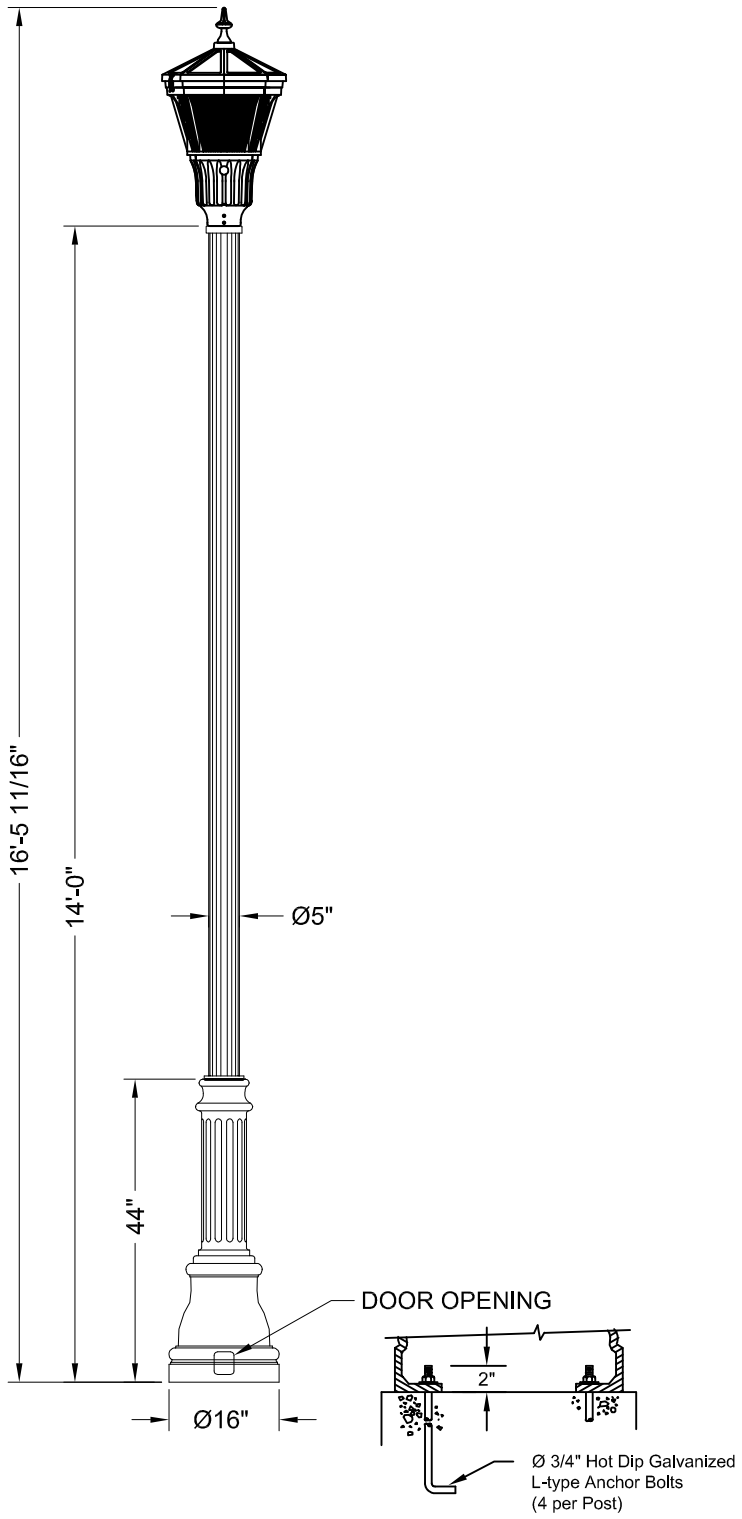

Specifications

POST DESCRIPTION

The lighting post shall be aluminum, one-piece construction, with a classic fluted base design. The shaft profile will consist of 4 mounting tracks and internal passages as shown.

MATERIALS

The base shall be heavy wall, cast aluminum produced from certified ASTM 356.1 ingot per ASTM B-179-95a. The straight shafts shall be extruded from aluminum, ASTM 6061 alloy, heat treated to a T6 temper. All hardware shall be tamper resistant stainless steel. Anchor bolts to be hot dip galvanized.

CONSTRUCTION

The shaft shall be double welded to the base casting and shipped as one piece for maximum structural integrity. The shaft shall be circumferentially welded inside the base casting at the top of the access door, and externally where the shaft exits the base. All exposed welds below 8' shall be ground smooth. All welding shall be per ANSI/AWS D1.2-90. All welders shall be certified per Section 5 of ANSI/AWS D1.2-9.0

DIMENSIONS

The post shall be 14'-0" in height with a 16" diameter base. The shaft diameter shall be 5" at the top of the post, a tenon with a transitional donut shall be provided for arm mounting.

INSTALLATION

The post shall use four L-type anchor bolts installed on a 12" bolt circle. A door shall be provided in the base for anchorage and wiring access. A grounding screw shall be provided inside the base opposite the door.

FINISH

The assembly shall be Holophane black powder coat

LUMINAIRE DESCRIPTION

-Utility Arlington LED
-100W 4K CCT
-Auto-Sensing 120-277v
-Asymmetric Glass Refractor, Spike Finial
-NEMA Twistlock Photocontrol Receptacle
-25' Prewired Leads
-DTL Solid State Photocontrol 120-277v

OPTICAL SYSTEM

Refractor is a thermal resistant borosilicate glass lens to provide an I.E.S. Type III distribution. Acrylic and polycarbonate lens are not acceptable. The optical system in conjunction with a polished reflector and LED circuit board with dedicated heat sink create a sealed optical compartment.

ELECTRICAL MODULE

All of the electrical components are mounted on one steel plate that is removable for ease of maintenance.

Anchorage Detail

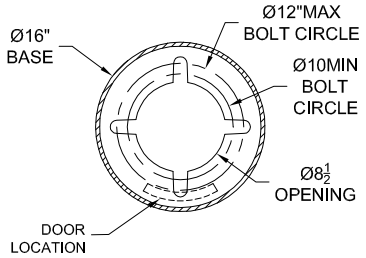

Catalog #'s:
ARUE1004KASG3BSHL25PCS -CHA14L5J16P07ABGBK

Costumer Signature **Date**

HOLOPHANE®
LEADER IN LIGHTING SOLUTIONS
An AcuityBrandsCompany

South Jordan Category 2

ORDER #:	TYPE: Cat 2	DRAWING #: TSG 003175
REVISION:	REVISION DATE:	
DRAWN:	ORIGIN DATE:	PAGE: 1 of 1

THIS DRAWING, WHEN APPROVED, SHALL BECOME THE COMPLETE SPECIFICATION FOR THE MATERIAL TO BE FURNISHED BY HOLOPHANE ON THE ORDER NOTED ABOVE. A UNIT OF SIMILAR DESIGN MAY BE SUPPLIED, BUT ONLY AFTER APPROVAL BY THE CUSTOMER IN WRITING. ON POLE ORDERS AN ANCHOR BOLT TEMPLATE PRINT WILL BE SUPPLIED WITH EACH ANCHOR BOLT ORDER TO MATCH THE POLE PROVIDED. THIS PRINT IS THE PROPERTY OF HOLOPHANE AND IS LOANED SUBJECT TO RETURN UPON DEMAND AND UPON EXPRESS CONDITION THAT IT WILL NOT BE USED DIRECTLY OR INDIRECTLY IN ANY WAY DETRIMENTAL TO OUR INTERESTS, AND ONLY IN CONNECTION WITH MATERIAL FURNISHED BY HOLOPHANE.

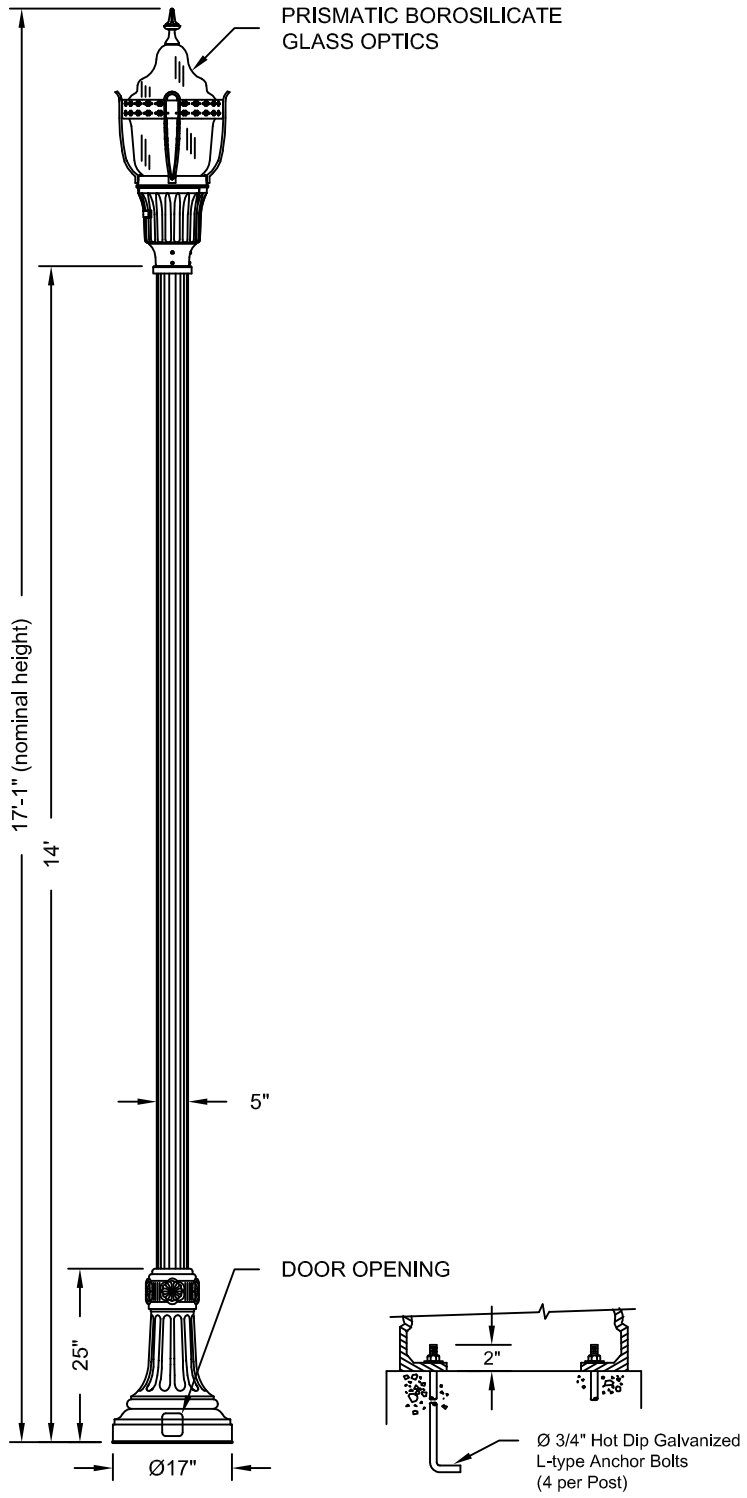

Specifications

POST DESCRIPTION
The lighting post shall be aluminum, one-piece construction, with a classic fluted base design.

MATERIALS
The base shall be heavy wall, cast aluminum produced from certified ASTM 356.1 ingot per ASTM B-179-95a. The straight shafts shall be extruded from aluminum, ASTM 6061 alloy, heat treated to a T6 temper. All hardware shall be tamper resistant stainless steel. Anchor bolts to be hot dip galvanized.

CONSTRUCTION
The shaft shall be double welded to the base casting and shipped as one piece for maximum structural integrity. The shaft shall be circumferentially welded inside the base casting at the top of the access door, and externally where the shaft exits the base. All exposed welds below 8' shall be ground smooth. All welding shall be per ANSI/AWS D1.2-90. All welders shall be certified per Section 5 of ANSI/AWS D1.2-9.0

DIMENSIONS
The post shall be 14'-0" in height with a 16" diameter base. The shaft diameter shall be 5" at the top of the post, a tenon with a transitional donut shall be provided for arm mounting.

INSTALLATION
The post shall use four L-type anchor bolts installed on a 12" bolt circle. A door shall be provided in the base for anchorage and wiring access. A grounding screw shall be provided inside the base opposite the door.

FINISH
The assembly shall be Holophane black powder coat

LUMINAIRE DESCRIPTION
-Utility Granville LED
-100W 4K CCT
-Auto-Sensing 120-277v
-Glass Prismatic Refractor Borosilicate glass, Decorative Cage and Spike Finial
-NEMA Twistlock Photocontrol Receptacle
-25' Prewired Leads
-DTL Solid State Photocontrol 120-277v

OPTICAL SYSTEM
The optical system consists of a precisely molded thermal resistant borosilicate glass refractor and top reflector mounted within the decorative aluminum housing and is not removable. The glass top reflector redirects over 50% of the upward light into controlling refractor while allowing an uplight component to define the acorn shape of the luminaire. I.E.S. type III distribution is provided through the refractor prisms. Acrylic or Polycarbonate optical lens are not acceptable.

ELECTRICAL MODULE
All of the electrical components are mounted on one steel plate that is removable for ease of maintenance.

Anchorage Detail

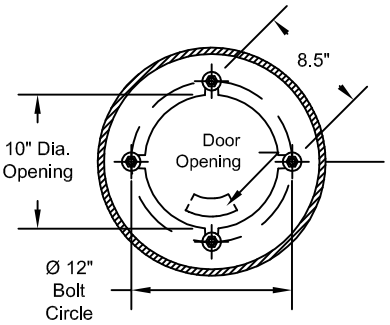

Catalog #'s:
GVD1004KASMB3RSGL25HPCSS NYA14F5J17P07ABG

Costumer Signature **Date**

HOLOPHANE®
LEADER IN LIGHTING SOLUTIONS
An AcuityBrandsCompany

South Jordan Category 3

ORDER #:	TYPE: Cat 3	DRAWING #: TSG 007220
REVISION:	REVISION DATE:	
DRAWN:	ORIGIN DATE:	PAGE: 1 of 1

THIS DRAWING, WHEN APPROVED, SHALL BECOME THE COMPLETE SPECIFICATION FOR THE MATERIAL TO BE FURNISHED BY HOLOPHANE ON THE ORDER NOTED ABOVE. A UNIT OF SIMILAR DESIGN MAY BE SUPPLIED, BUT ONLY AFTER APPROVAL BY THE CUSTOMER IN WRITING. ON POLE ORDERS AN ANCHOR BOLT TEMPLATE PRINT WILL BE SUPPLIED WITH EACH ANCHOR BOLT ORDER TO MATCH THE POLE PROVIDED. THIS PRINT IS THE PROPERTY OF HOLOPHANE AND IS LOANED SUBJECT TO RETURN UPON DEMAND AND UPON EXPRESS CONDITION THAT IT WILL NOT BE USED DIRECTLY OR INDIRECTLY IN ANY WAY DETRIMENTAL TO OUR INTERESTS, AND ONLY IN CONNECTION WITH MATERIAL FURNISHED BY HOLOPHANE.

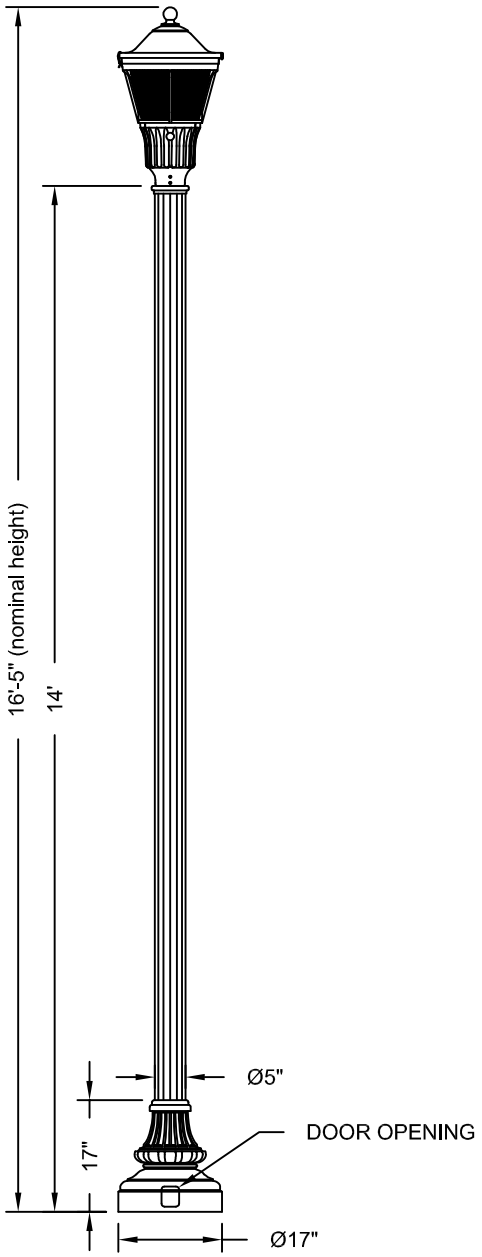

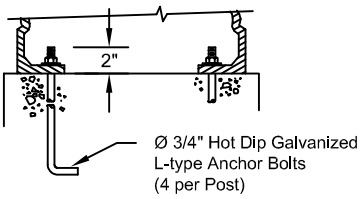

Specifications

POST DESCRIPTION
The lighting post shall be aluminum, one-piece construction, with a classic fluted base design.

MATERIALS
The base shall be heavy wall, cast aluminum produced from certified ASTM 356.1 ingot per ASTM B-179-95a. The straight shafts shall be extruded from aluminum, ASTM 6061 alloy, heat treated to a T6 temper. All hardware shall be tamper resistant stainless steel. Anchor bolts to be hot dip galvanized.

CONSTRUCTION
The shaft shall be double welded to the base casting and shipped as one piece for maximum structural integrity. The shaft shall be circumferentially welded inside the base casting at the top of the access door, and externally where the shaft exits the base. All exposed welds below 8' shall be ground smooth. All welding shall be per ANSI/AWS D1.2-90. All welders shall be certified per Section 5 of ANSI/AWS D1.2-9.0

DIMENSIONS
The post shall be 14'-0" in height with a 16" diameter base. The shaft diameter shall be 5" at the top of the post.

INSTALLATION
The post shall use four L-type anchor bolts installed on a 12" bolt circle. A door shall be provided in the base for anchorage and wiring access. A grounding screw shall be provided inside the base opposite the door.

FINISH
The assembly shall be Holophane black powder coat

LUMINAIRE DESCRIPTION
-Utility Postop LED
-50W 4K CCT
-Auto-Sensing 120-277v
-Asymmetric Glass Refractor, Ball Finial
-NEMA Twistlock Photocontrol Receptacle
-25' Prewired Leads
-DTL Solid State Photocontrol 120-277v

OPTICAL SYSTEM
Refractor is a thermal resistant borosilicate glass lens to provide an I.E.S. Type III distribution. Acrylic and polycarbonate lens are not acceptable. The optical system in conjunction with a polished reflector and LED circuit board with dedicated heat sink create a sealed optical compartment.

ELECTRICAL MODULE
All of the electrical components are mounted on one steel plate that is removable for ease of maintenance.

Anchorage Detail

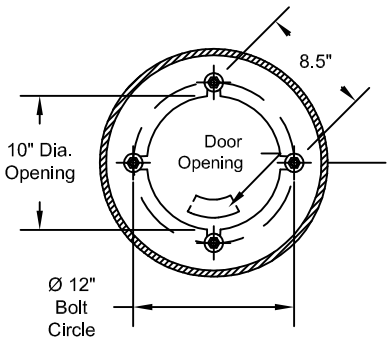

Catalog #'s:
PTUE504KASG3BBHL25PCS WDA14F5J17P07ABGBK

Customer Signiture

HOLOPHANE®
LEADER IN LIGHTING SOLUTIONS
An AcuityBrandsCompany

South Jordan Category 4

ORDER #:	TYPE: Cat 4	DRAWING #: TSG 003314
REVISION:	REVISION DATE:	
DRAWN:	ORIGIN DATE:	PAGE: 1 of 1

THIS DRAWING, WHEN APPROVED, SHALL BECOME THE COMPLETE SPECIFICATION FOR THE MATERIAL TO BE FURNISHED BY HOLOPHANE ON THE ORDER NOTED ABOVE. A UNIT OF SIMILAR DESIGN MAY BE SUPPLIED, BUT ONLY AFTER APPROVAL BY THE CUSTOMER IN WRITING. ON POLE ORDERS AN ANCHOR BOLT TEMPLATE PRINT WILL BE SUPPLIED WITH EACH ANCHOR BOLT ORDER TO MATCH THE POLE PROVIDED. THIS PRINT IS THE PROPERTY OF HOLOPHANE AND IS LOANED SUBJECT TO RETURN UPON DEMAND AND UPON EXPRESS CONDITION THAT IT WILL NOT BE USED DIRECTLY OR INDIRECTLY IN ANY WAY DETRIMENTAL TO OUR INTERESTS, AND ONLY IN CONNECTION WITH MATERIAL FURNISHED BY HOLOPHANE.

Cable Retainer Assy, For 4" Foundation Anchor, Galvanized Steel

SP-6224-GLV

Pelco's anti-theft Cable Retainer is the best solution to help prevent copper cable theft in street light poles. Works with Pelco's PB-5364 4" Foundation Anchor or to existing foundations with a 8"-13-1/2" bolt circle. Secures 3/16" to 1/2" diameter cables.

Cable Retainer Assy, For 6" Foundation Anchor, Galvanized Steel

SP-6200-GLV

Pelco's anti-theft Cable Retainer is the best solution to help prevent copper cable theft in street light poles. Works with Pelco's PB-5372 6" Foundation Anchor or to existing foundations with a 9-1/2"-13-1/2" bolt circle. Secures 3/16" to 1/2" diameter cables.

Note: 1. All assemblies are supplied standard with stainless steel fasteners.

PELCO PRODUCTS, INC.

Cable Retainer Assy, For 8" Foundation Anchor, Galvanized Steel

SP-6205-GLV

Pelco's anti-theft Cable Retainer is the best solution to help prevent copper cable theft in street light poles. Works with Pelco's PB-5375 8" Foundation Anchor or to existing foundations with a 11-1/2"-17" bolt circle. Secures 3/16" to 1/2" diameter cables.

Tube Assembly For 6" Cable Retainer, Galvanized Steel

SP-6358- [ ] -GLV

Length

04.5=4-1/2"
16.38=16-3/8"

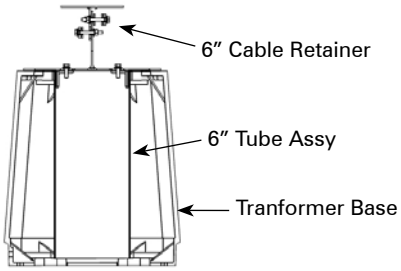

The Tube Assembly mounts underneath Pelco's SP-6200 anti-theft Cable Retainer inside the transformer base. The tube is designed to prevent copper cable theft in street light poles. Available in 4-1/2" or 16-3/8" lengths. Complete with mounting hardware.

Note: 1. All assemblies are supplied standard with stainless steel fasteners.

Door Assy, TB1-17 Tranformer Base "Copper Safe" Theft Deterrent Steel

Coating

PB-5520-[ ]

P_ _=Paint

Pelco's "Copper Safe" Transformer Doors are shatter-resistant and pull-off resistant to protect against copper theft. Typically powder coated P40 Silver, other colors available. Requires AP-5121 Kit for installation.

Door Assy, TB1-20 Tranformer Base "Copper Safe" Theft Deterrent Steel

Coating

PB-5526-[ ]

P_ _=Paint

Pelco's "Copper Safe" Transformer Doors are shatter-resistant and pull-off resistant to protect against copper theft. Typically powder coated P40 Silver, other colors available. Requires AP-5121 Kit for installation.

Note: 1. All assemblies are supplied standard with stainless steel fasteners.
2. See Reference Section for available paint colors.