CITY OF HOLLADAY

VARIANCE APPLICATION
REQUEST FOR APPEAL OFFICER ACTION

~~~
~~~

especially in his circumstance. He also highlights that the size and shape of his property differs significantly from those of other properties in the neighborhood, thereby necessitating exaggerated setback requirements which would disproportionately alter the character of the neighborhood street face. Additionally, the applicant submits that complying with the current side setback code requirements would compel them to abandon their project entirely, as compliance would cripple the feasibility of the project. Additional information regarding the applicants' narrative, site plan, and proposed side yard setbacks is attached herewith.

HOLLADAY CITY CODE

Per City Ordinance §13.14.050: SETBACKS:

1. A. Purpose: The spacing of buildings and structures away from property lines, rights-of-way, physical hazards and natural features such as streams and other buildings, are essential elements of land use planning and of urban design. In particular, setbacks may provide for privacy, light, shadow, air movement, passive and active space, vegetation and also contribute directly to physical and psychological wellbeing. Setbacks should vary proportionally depending upon the size and shape of the properties and also upon the type of the existing and proposed land use. In some instances setbacks should be uniform assuming there is a specific desired outcome for the setback, such as protection of views, public safety, economic development, etc. In other instances, variability and flexibility of setback may produce equally important outcomes such as the protection of natural features, aesthetically pleasing streetscapes, creativity in architectural design, and retention of fragile housing stock or other important goals. Due to the evolution of housing styles over the last few decades, the relative high value of land within the community, the desire for architectural creativity, and especially the dramatic increase in average house size, setbacks shall be applied within a flexible envelope.

   B. Implementation: Averaging of setbacks in all yard areas shall be allowed as shown below. Variations across the setback line may not exceed fifteen percent (15%) of the minimums required. Calculation of the average shall require at least ten (10) equally spaced measurements across any one "building line", as defined in section 13.04.040 of this title, and shown in figure 13.14.051 of this subsection.

Per City Ordinance §13.14.056: SIDE SETBACKS:

A. The combined setbacks for any main structure on a lot in any R-1 zone shall be a minimum of twenty five percent (25%) of the "lot width" (see chapter 13.04, "Definitions", of this title) with no one side setback less than ten percent (10%) of the lot width.

B. The combined setback for any main structure on a lot measuring twice or more the minimum lot size required by the zone in which it is located shall be a minimum thirty percent (30%) of the "lot width" (see chapter 13.04, "Definitions", of this title) with no one side setback less than fifteen percent (15%) of the lot width. (Ord. 2018-05, 5-17-2018)

Definitions §13.04: LOT WIDTH

The diameter of the largest circle that can be inscribed entirely within a lot. The lot width circle shall not include streams/floodplains, wetlands, areas of thirty percent (30%) slope or greater or other natural hazard areas, or a "significant tree" as defined in this title.

APPROVAL STANDARDS

FIVE-PART TEST FOR VARIANCE:

The Hearing Officer may grant a variance only if:

1. **Literal enforcement of the zoning ordinance would cause an unreasonable hardship for the applicant that is not necessary to carry out the general purpose of the zoning ordinance.** In determining whether or not enforcement of the zoning ordinance would cause unreasonable hardship, the board of adjustment may not find an unreasonable hardship unless the alleged hardship: 1) is located on or associated with the property for which the variance is sought; and 2) comes from circumstances peculiar to the property, not from conditions that are general to the neighborhood. The hardship cannot be self-imposed or economic.
2. **There are special circumstances attached to the property that do not generally apply to other properties in the same zone.** The Hearing Officer may find that special circumstances exist only if the special circumstances: 1) relate to the hardship complained of; and 2) deprive the property of privileges granted to other properties in the same zone.
3. **Granting the variance is essential to the enjoyment of a substantial property right possessed by other property in the same zone.**
4. **The variance will not substantially affect the development code and will not be contrary to the public interest.**
5. **The spirit of the zoning ordinance is observed and substantial justice is done.**

STAFF FINDINGS (ANAYLSIS)

(*Staff does not vote on these matters and acts only in an advisory position on the technical aspects of the application*)

Generally, these findings and observations were made in relation to the variance request;

- Pursuant to Holladay City regulations on side setbacks as defined in section §13.14.056 of the City Code, the minimum side yard setback distance for any main structure on a lot in any R-1 zone shall be 25% of the lot width. In the applicant's case, their lot size *(28,314 sq. ft.)* is almost three-times (3x) the minimum lot size in that zone *(R-1-10)*. Therefore, Holladay's ordinance prescribes different application of side setback regulations for such lot, requiring wider setbacks. Specifically, §13.14.056(B) states "*The combined setback for any main structure on a lot measuring twice or more the minimum lot size required by the zone in which it is located shall be a minimum thirty percent (30%) of the "lot width" with no one side setback less than fifteen percent (15%)*".

  The Planning Department assesses the lot width for the subject property to be approximately 143 ft. *(See Figure 1 below)*. In this case, the required side setback would be a combined 42.9 ft (30%) with no one side less than 21.45 ft. (15%). This requirement would constitute a 10 ft. deviance in minimum side setback from the pre-existing conditions on the subject property. Decisions regarding the uniqueness of the applicant's property should be, in part, moderated by recognizing the considerable size and width of the subject properties in comparison with adjacent neighboring lots on Waldo Drive.

Figure 1: Applicant's Lot Width Assessment

- The requirements of the ordinance on setbacks as outlined in section §13.14.050 is intended to regulate spacing between buildings to uphold shared principles of privacy, light, shadow, and air movement. The applicant's request to maintain the existing foundation footprint does not appear to unreasonably conflict with the purpose of this ordinance provision – as the pre- existing structure appears to seamlessly align with the neighborhood street face. (*See Street view of subject project*). Compliance with the 21 ft side setback would dictate that the current building moves about 82 ft deeper into the lot – which would detract from the visual appeal and architectural alignment of homes on this corner of Waldo Street *(See figure 4)*.

Figure 2: Existing Streetscape Subject Property on Waldo Dr.

- The overarching purpose of the City ordinance on setbacks as pertaining to section §13.14.050 allows for the flexible application of setback standards based on contextual considerations. The Code section §13.14.050 (A) stipulates that "*Due to the evolution of housing styles over the last few decades, the relative high value of land within the community, the desire for architectural creativity, and especially the dramatic increase in average house size,* ***setbacks shall be applied within a flexible envelope.***" While the property is unique in terms of its size and shape, complying with the prescribed side setback may also impact their ability to meet other zoning regulations such as the maximum structural height and building corridor restrictions. A neighborhood assessment of the current side setbacks on Waldo Drive also shows that on average, all adjacent properties have side setbacks ranging from 8 ft to 13 ft *(See Figure 3 below and applicant's narrative)*. Requiring a 21 ft side setback from the applicant appears to be a disproportionate treatment and calls for the application of the envelope flexibilities as stated in the above portions of Holladay city code *(See Figure 4)*. Maintaining the existing side setbacks would ensure uniform setbacks for all properties located on Waldo Drive while preserving aesthetically pleasing streetscapes in the neighborhood.

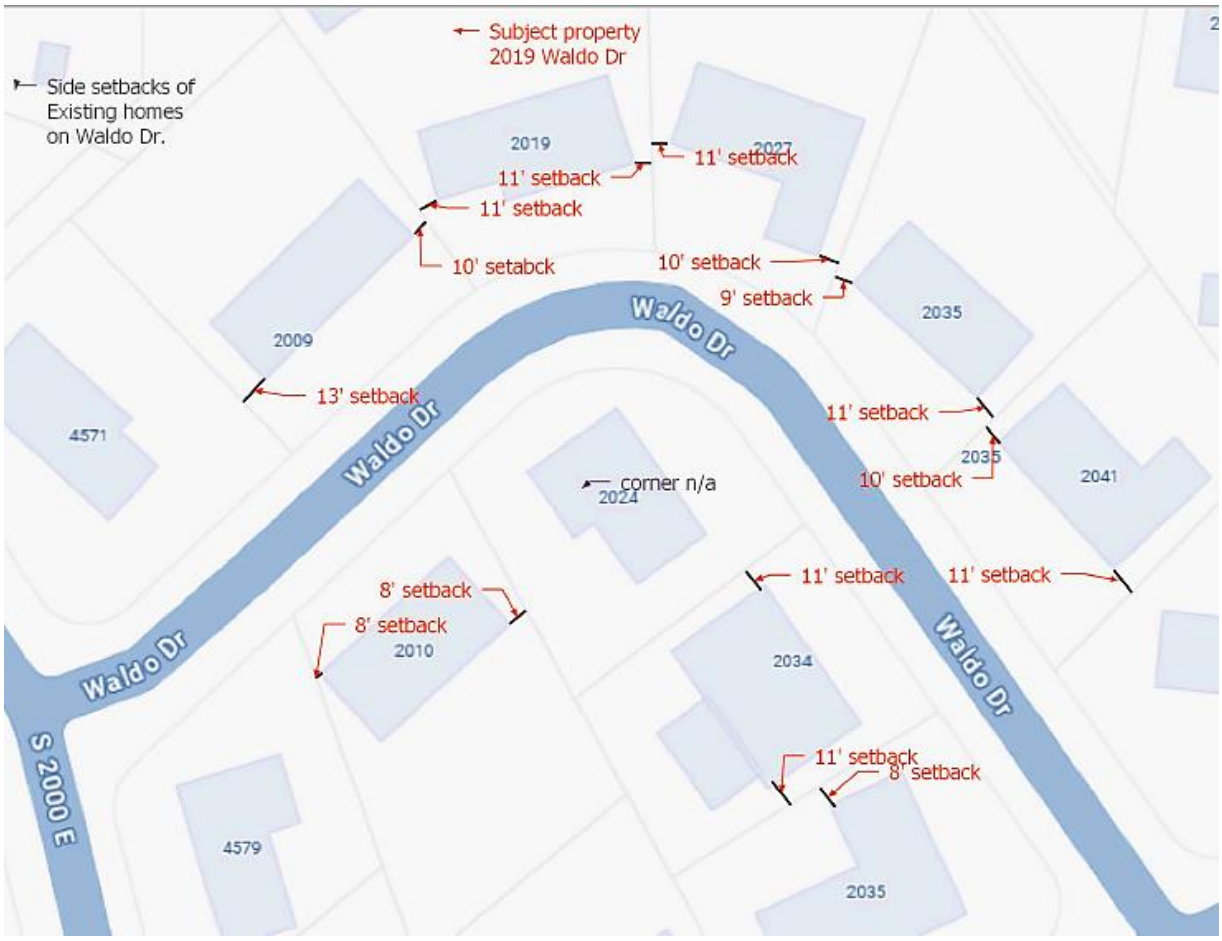

Figure 3: Assessing Existing Neighborhood Side Setbacks on Waldo Dr.

Figure 4: Existing Situation (Left side) Vs Compliance (Right side)

STAFF COMMENTARY & RECOMMENDATION

Pursuant to State Law and Holladay City's Quasi-Judicial Procedures regarding variance requests, the burden of proof lies with the applicant to convincingly argue before the Administrative Appeals Officer that one or more conditions related to the property they represent hinders the applicant's reasonable use of their land in a manner and form comparable with that enjoyed by their neighbors or other properties in a similar situation and zoning district. Each variance application is reviewed on a case-by-case basis and the merits of the matter are assessed in a public forum. Any public testimony received in response to notifications provided via public notice, the City's websites, and any comments or recommendations by City Departments or external agencies have been presented to the Administrative Appeals Officer for their consideration. Below, the City staff assigned to this case provides commentary and recommendations on each of the five-part approval standards for this variance application.

Describing what hardship will occur if variance is not granted.

Concerning the appellant's demonstration of the existence of unique circumstances or an unreasonable hardship making it exceptionally difficult to comply with the zoning regulations, the applicant outlined three (3) factors in their narrative to satisfy the burden of proof. These points included the impracticality of building a structure that conforms to the zoning ordinance while matching existing neighborhood street face. Moreover, the applicant pointed to restrictions that would be imposed on the functional size of their home and long-term seismic and energy-efficient upgrades to meet modern construction standards An independent assessment of applicable zoning laws by the City's Technical Review Committee indicates that compliance with the side setback requirement would indeed create an unreasonable hardship that extends to meeting other zoning codes, particularly pertaining to building corridor restrictions and significantly altering the character of the streetscape on Waldo Dr. The hardship conditions submitted by the applicant appears to be neither self-imposed nor for economic reasons. Rather, they are peculiar to the property, limits substantial development rights, and poses significant deviations from the neighborhood character. City Staff posits that accommodating these hardships would be reasonable and justified, comparative to requiring compliance with the existing City Code on setback standards §13.14.056.

Describing how the property is different from other properties within the vicinity.

Regarding special circumstances attached to the property making it different from others within the vicinity, both the applicant and City Staff believes that property distinguishes itself from other properties along Waldo Drive. Mr. Berrett's property is notably unique and poses special circumstance that set it apart from others within the vicinity. First, the property *(28,314 sq. ft.)* is nearly three-times (3x) the minimum lot size in our R-1-10 zone and twice the size of the average lot on Waldo Dr *(0.34 acres)*. Second, the irregular 'pie-shape' shape and width of the property makes it unique from other properties in the vicinity. These two focal points elect Mr. Berrett's property to be characteristically distinct from others in neighborhood and necessitates different treatment – specifically pertaining to the side setback. City Staff is of the opinion that granting an exception to the above portions of city ordinance §13.14.056 would ensure a reasonable and uniform application of setbacks based on the uniqueness of this context while minimizing substantial deviations from neighborhood character.

Describing benefits other properties in the vicinity will enjoy at the expense of Applicant without a variance.

In justifying how granting the variance is essential to the enjoyment of a substantial property right possessed by other property in the same district, the applicant presents two (2) reasons to this effect. Mr. Berrett indicates that

granting them the variance will ensure they enjoy similar benefits other properties on Waldo Drive enjoy including uniform setbacks, preventing visual distortion to property's appeal, as well as removing barriers to future rebuilds and development square footage on the property. As shown in City Staff's analysis above, the average side setbacks for properties on Waldo Drive range from 8 – 13 ft. However, the shape and design of the Applicant's property would demand an 21 ft setback – constituting a 13.45 ft to an 8.45 ft difference in enjoying similar property rights by neighbors. Given the size configuration and geographic characteristics of properties on Waldo Drive, City Staff believes granting the variance to the applicant will be essential to the substantial enjoyment of property rights and common privileges enjoyed by other properties in the vicinity.

Describing why the variance will not deviate from the general purposes of the City of Holladay development code

Regarding deviations from the City's development code that are not contrary to the public interest, the ordinance provisions as pertaining to setbacks §13.14.050 are explicit in their intent to ensure uniform setbacks to achieve specific desired outcomes, and in other instances, accommodate variability and flexibility to produce equally important outcomes. In light of the circumstances presented in this case, City staff agrees with the applicant that ensuring uniform neighborhood side setbacks does not deviate from the general purpose of the development code. Granting the variance would in fact, contribute positively to preserving a pleasant street face on Waldo Dr, maintaining setback uniformity, compactible visual continuity of the neighborhood, and promoting aesthetically pleasing environments patterns in the vicinity.

Describing how the variance is fair and conforms to the overall intent of the zoning laws

In conforming to the general intent of zoning laws and fairness, the supplementary evidence presented by the applicant and geo-spatial analysis conducted by City Staff demonstrate that the requested variance conforms to the overall intent of the zoning laws – specifically setback ordinance §13.14.050(A). Granting the variance would also foster the principle of fairness in applying setback regulations to produce equal outcomes. This would be especially critical in rectifying the disproportionate impact of applying a 21.45 ft side setback standard on Mr. Berrett while his neighbors in the immediate vicinity enjoy between 8 and 13 ft side setbacks. City Staff believes that granting the variance to maintain the original 11 ft side setbacks would be key to ensuring that the fairness principle is accommodated while upholding the spirit of zoning intent.

RECOMMENDATION

Concluding from the City Staff's technical review of City Code and analysis of the geographical characteristics of the case context, granting this variance request appears to be the least intrusive solution to upholding the spirit of zoning as outlined in section §13.14.050(A). Generally, discussions regarding denials or approval should be moderated by examination of the language of City Code *(on sections §13.14.050 and §13.14.056)*, the applicant's narrative and proceedings from the public hearing, as well as other submissions received herein. From the City Staff's perspective, this variance request comprehensively passes the five-part test for variance approval standards. Approval is Recommended.

POSSIBLE MOTIONS

- Deny the variance request.
- Approve variance as requested.
- Approve variances with revised/alternative mitigation methods.
- Remand the request back to CED for consideration (*reschedule date should be set during this meeting*)

SUPPORTING DOCUMENTS

- Affidavit of Property Ownership
- General Appeal Application
- Variance Request
- Applicant's Narrative
- Site Plans and relevant street photos and plans

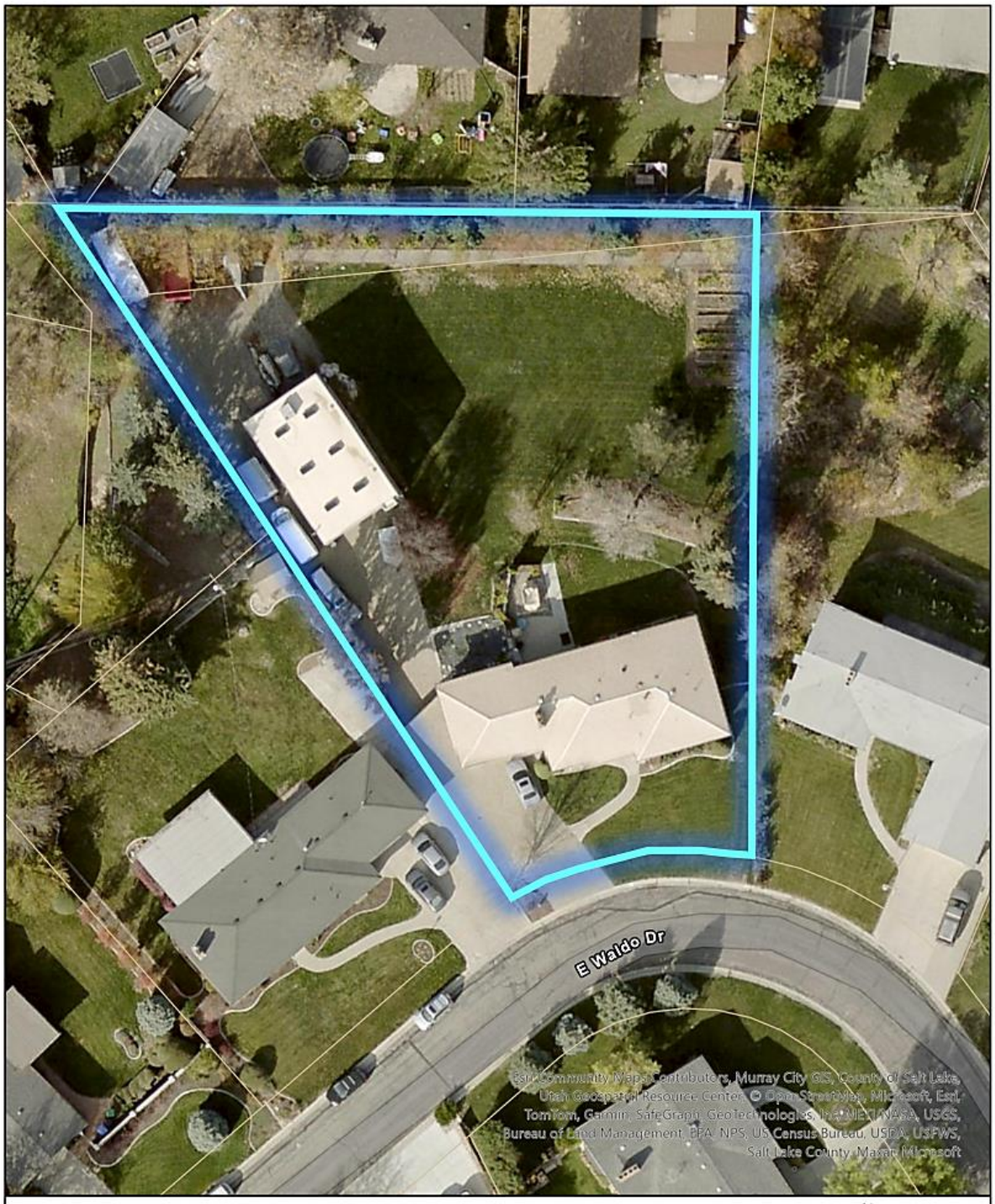

City of Holladay
2019 E Waldo Drive
SETBACK VARIANCE

N
0 0.15 0.3 Mi
0 0.3 0.6 Km

Ribbon Ln
Suncrest Dr
Ribbon L
E Waldo Dr
Subject Location
S Waldo Dr
Sycamore Dr
Crosshill Dr
City of Holladay
2019 E Waldo Drive
SETBACK VARIANCE
N
0 0.15 0.3 Mi
0 0.3 0.6 Km

City of Holladay
2019 E Waldo Drive
SETBACK VARIANCE

N
0 0.15 0.3 Mi
0 0.3 0.6 Km

City of Holladay
COMMUNITY ECONOMIC DEVELOPMENT DEPARTMENT
4580 S 2300 E, Holladay, Utah 84117
Phone: 801-527-3890

GENERAL APPEAL APPLICATION

Name of Project: 2019 Waldo Dr

Address of Project: 2019 E Waldo Dr Holladay, Utah 84117

TYPE OF APPEAL

APPEAL AUTHORITY: ADMINISTRATIVE APPEALS OFFICER (ORD. 13.09)	*APPEAL AUTHORITY: CITY COUNCIL (ORD. 13.07)*
✓ VARIANCE* – WAIVER/MODIFICATION to ZONE ORDINANCE	☐ PLANNING COMMISSION ACTION – 10 days from date decision
☐ ADMINISTRATIVE DECISION – 10 days from date decision	

*Please review the FAQs on Variances at Utah Property Rights

Appellant Name: (Please Print) ***ATTACH PROPERTY OWNER AFFIDAVIT*** Blake Berrett

Appellant's Agent: (Please Print)

Appellant's Mailing: Address: Po box 17495 **City:** Holladay **State:** Utah **Zip:** 8411

Appellant's Phone: 8012748640 ( )

Appellant's Email Address: blakebe2003@gmail.com

Main Contact Person (Please Print):
Name: Blake Berrett **Phone:** 8012748640 **email:** blakebe2003@gmail.com

Brief description of decision being appealed: *(attach written, detailed ground for the appeal to this application)*

Keep existing sideyard setbacks of 11' for new home or renovation project

Keep existing sideyard setbacks of 11' for new home or renovation project

FILING FEES: (ORD 3.35)

☐ VARIANCE - RESIDENTIAL	$500.00	☐ APPEAL TO CITY COUNCIL	$150.00
☐ VARIANCE - COMMERCIAL	$750.00		
☐ APPEAL of ADMINISTRATIVE DECISION	$500.00		

FINAL TOTAL DUE: ☐

OFFICE USE ONLY

FILE NUMBER: _____
PARCEL NUMBER: _____
GENERAL PLAN: _____
ZONE: _____
PC ACTION: _____ DATE:
CC ACTION: _____ DATE:
FILE DATE: _____

NEXT STEPS FOR APPLICANTS:

1. To be considered COMPLETE, this form must be accompanied by all applicable "project tracking" checklist(s)/submittals or it will not be accepted.
2. Complete applications must be submitted 3 weeks prior to the desired Planning Commission date
3. Applications are reviewed every Tuesday by the Holladay TRC. You will be notified of any deficiencies, decisions and/or meetings dates at that time
4. Planning Commission convenes each month on the 1st and 3rd Tuesday. City Council convenes the 1st and 3rd Thursday of each month
5. Your Attendance at the Planning Commission and/or City Council meetings is required by the applicant or a representative of the applicant.

STAFF ACKNOWLEDMENT OF COMPLETE APPLICTION: _____ **DATE:** _____

City of Holladay
AFFIDAVIT OF PROPERTY OWNERSHIP
for property located at

Address: 2019 E Waldo Dr. Holladay Utah 84117

Subdivision: Holladay Estates Plat: _____ Lot: 17

PROPERTY OWNER

I (we), Blake Berrett and Erin Berrett being duly sworn, depose and say that I (we) am (are) the owner(s) of the property identified in the attached application and that the statement herein contained and the information provided in the attached plans and other exhibits are in all respects true and correct to the best of my (our) knowledge.

Property Owner

Property Owner

CHRISTINA GALLEGOS
Notary Public - State of Utah
Comm. No. 720685
My Commission Expires on
Sep 30, 2025

ACKNOWLEDGMENT

State of Utah)
) ss.
County of Salt Lake)

The foregoing affidavit was acknowledged before me this 29th day of January, 2025, who duly acknowledged to me that he did execute the same.

My commission expires: 9/30/2025

Notary Public

AGENT AUTHORIZATION

I (We), _____, the owner(s) of the real property described above, do authorize as my agent(s) _____ to represent me (us) regarding the attached application and to appear on my (our) behalf before any administrative or legislative body in the City of Holladay considering this application and to act in all respects as our agent in matters pertaining to the attached application.

ACKNOWLEDGMENT

State of Utah)
) ss.
County of _____)

The foregoing affidavit was acknowledged before me this _____ day of _____, 20___, who duly acknowledged to me that he did execute the same.

My commission expires: _____

Notary Public

VARIANCE REQUEST FOR 2019 E WALDO DR

Zoning: R-1-10

Subject lot size: .65 (28,314 sq ft)

-

Items listed below as per Holladay's required documents for submittal:

-

a) **Type of variance requested:**

1. We are requesting a variance to keep our existing Side Setbacks of 11' on each side of the home and allow us to perform a major home renovation either using the existing foundation or new construction within those 11' side setbacks.

-

b) **Sections of code requesting a variance on:**

1. 13.04.040: LOT WIDTH: *The diameter of the largest circle that can be inscribed entirely within a lot. The lot width circle shall not include streams/floodplains, wetlands, areas of thirty percent (30%) slope or greater or other natural hazard areas, or a "significant tree" as defined in this title*

-

2. 13.14.056: SIDE SETBACKS: *A. The combined setbacks for any main structure on a lot in any R-1 zone shall be a minimum of twenty five percent (25%) of the "lot width" (see chapter 13.04, "Definitions", of this title) with no one side setback less than ten percent (10%) of the lot width. B. The combined setback for any main structure on a lot measuring twice or more the minimum lot size required by the zone in which it is located shall be a minimum thirty percent (30%) of the "lot width" (see chapter 13.04, "Definitions", of this title) with no one side setback less than fifteen percent (15%) of the lot width. (Ord. 2018-05, 5-17-2018)*

c) **Why the variance is requested and purpose:**

1. Granting a variance to maintain our current 11-foot side setbacks is crucial for us to move forward with any significant project to our home. This variance would allow us to either renovate our home utilizing the existing foundation or construct a new home within the same established setbacks of 11' on each side. Maintaining these setbacks is essential for preserving the visual harmony of our property with the surrounding neighborhood. The current Holladay City code mandates increased side setbacks for any projects removing 50% or more of an existing structure. This requirement would necessitate a significant reduction in our home's width, resulting in a disproportionate and visually unappealing structure that clashes with the architectural character of the street and the overall neighborhood. Without this variance, we would be compelled to abandon our project entirely, as compliance with the current code would render the project infeasible.

2. These mandated setbacks are both undesirable and impractical for our property due to its unique configuration: a larger, highly irregular 'pie-shaped' lot. It is evident that the current code was not designed or intended to accommodate the specific challenges and limitations presented by such lot configurations.

3. The granted variance will enable us to develop realistic floor plans that effectively utilize the existing side setbacks. The current home's width already presents design challenges. Further reducing the width would not only result in an aesthetically unappealing structure but could also necessitate the loss of a bedroom or significant square footage, which is crucial for our needs. Moreover, the majority of homes in the vicinity exhibit very similar front and side setbacks. Any substantial alteration to these setbacks would create a visually discordant structure that would appear out of place within the established architectural character of the neighborhood.

4. The Holladay City Development Code currently determines side setbacks based on the 'largest diameter circle that can be drawn within a lot.' This methodology fails to adequately address the unique characteristics of larger, highly irregular lots, such as ours. Our property exhibits a distinctive 'pie-shaped' configuration, with the majority of its width concentrated towards the rear of the lot. This contrasts significantly with the more common rectangular lot shapes you might see in most neighborhoods. To illustrate this point: if our lot were a traditional rectangle with the same overall square footage but simply maintaining the street frontage we have now

of approximately 74 feet going straight back (vs a pie shape), we could readily accommodate our existing foundation or construct a new home within our current 11-foot side setbacks without the need for a variance.

d) Describe following points:

1. Hardship(s) that will be incurred if a variance is not granted:

a. Adherence to Holladay's current side setback restrictions for a major renovation or new construction would necessitate a significant reduction in the home's overall width. This reduction could range from approximately 10 feet to as much as 22 feet, depending on the placement of the 'largest circle' within the lot as determined by the City of Holladay's building department. Even a minimal reduction in width would look out of place but a 10' reduction in width would result in a structure that appears visually discordant and inconsistent with the architectural character of our street and the surrounding neighborhood. A 22-foot reduction would be both impractical and aesthetically unacceptable, rendering the project infeasible.

b. The inability to obtain a variance for our existing 11-foot side setbacks would likely preclude us from pursuing a major renovation or new construction. A significant reduction in the home's size would severely hinder the development of a functional floor plan and would create a visually discordant structure that clashes with the established character of our neighborhood. Without the variance, we would be limited to minor cosmetic improvements or no improvements at all. These limited options are not viable long-term solutions. The current structure requires extensive updates, including energy-efficient upgrades and a complete redesign to meet modern construction standards and our needs. The home, originally built in 1957, has undergone almost no updates over the years and is in dire need of a comprehensive overhaul.

c. Without the variance, we would be restricted to cosmetic improvements or no improvements at all. This would prevent us from upgrading the home to comply with current building codes, including seismic requirements, which poses a significant long-term safety concern for us.

2.How this property is different from other properties within the vicinity:

a. Our lot is a large, 'pie-shaped' lot with an irregular configuration, unlike the more common rectangular lots. The majority of our lot's width is located towards the rear. It appears that the 'largest circle' method for determining setbacks was not intended to be applied to lots with such unique characteristics and may not accurately reflect the intent of the code.

3. Benefit other properties enjoy that our property will not without a variance:

a. Unlike many other lots in the neighborhood, which are more rectangular and closer to the minimum lot size, our irregularly shaped lot is disproportionately impacted by the current side setback requirements.

4. Why variance will not deviate from the general purposes of the City of Holladay code:

a. A couple items that help support our variance request are actually specifically noted in part of the holladay code under Section of 13.14.010: PURPOSE OF PROVISIONS:

"The majority of land use in the City of Holladay is low density, single-family, detached dwellings. Most of these dwellings are located in areas zoned R-1. The purpose of the R-1 zones is to establish and maintain low density residential neighborhoods that provide persons who reside therein a comfortable, healthy, safe and pleasant environment. Furthermore, the rules below should support the goals of the general plan such as the preservation of housing by allowing for reasonable expansion within limits and for responsible growth. Also, it is the intent of the rules to ensure that development within these zones is harmonious and compatible with the character of existing development patterns in the immediate vicinity including building mass, setback, lot coverage, height, etc. Specific techniques, among others, that shall be applied in approval of all development are:"

A. *Graduated height/building envelope rules.*

B. *Maximum building footprint coverage percentages.*

C. *Maximum height allowances.*

D. *Averaging of building setbacks. (Ord. 2012-15, 9-20-2012; amd. Ord. 2021-24, 9-9-2021)*

b. Our current front yard area, front and side setbacks of the home, and the overall view from the street are in harmony with the surrounding properties. Maintaining these

setbacks appears to be consistent with the likely intent of the Holladay City Development Code, which aims to preserve the established character of existing neighborhoods.

c. Getting our variance granted would help support some of Holladays intentions as noted in this section above.

d. Item D listed above, 'Averaging of building setbacks,' currently appears to only apply to front setbacks. To preserve the established character of the immediate vicinity, consideration should be given to extending this provision to side yard setbacks, especially in cases like ours where the 'largest circle' method is deemed inappropriate. Utilizing some form of 'averaging' could be particularly beneficial in these situations.

-

5.How variance conforms to overall intent of the zoning laws and why it is fair to granted:

-

a. Regarding conformance with the intent of the zoning, I refer to the statements previously made in item 4, which are directly supported by the Holladay City Code.

b. A variance was granted for the same (or very similar) circumstances about a block away on Cresthill Cir about a year ago and they kept the foundation and built new home on the existing footprint (very similar lot size & side setbacks, lot is on an inward curved street so it creates same wide 'pie shape' lot, etc). We fell our scenario is very similar if not identical.

c. We believe granting this side setback variance is the most appropriate course of action. Without it, we would be limited to either constructing a significantly narrower home or setting the home excessively far back from the property line, both of which would disrupt the established neighborhood character and neither are a desired nor feasible solution. Furthermore, undertaking minimal cosmetic upgrades would be insufficient to address the home's critical needs, including outdated systems, energy inefficiency, seismic vulnerabilities, and an inadequate floor plan.

Thanks for your consideration,

Blake and Erin Berrett

NO-O

2034

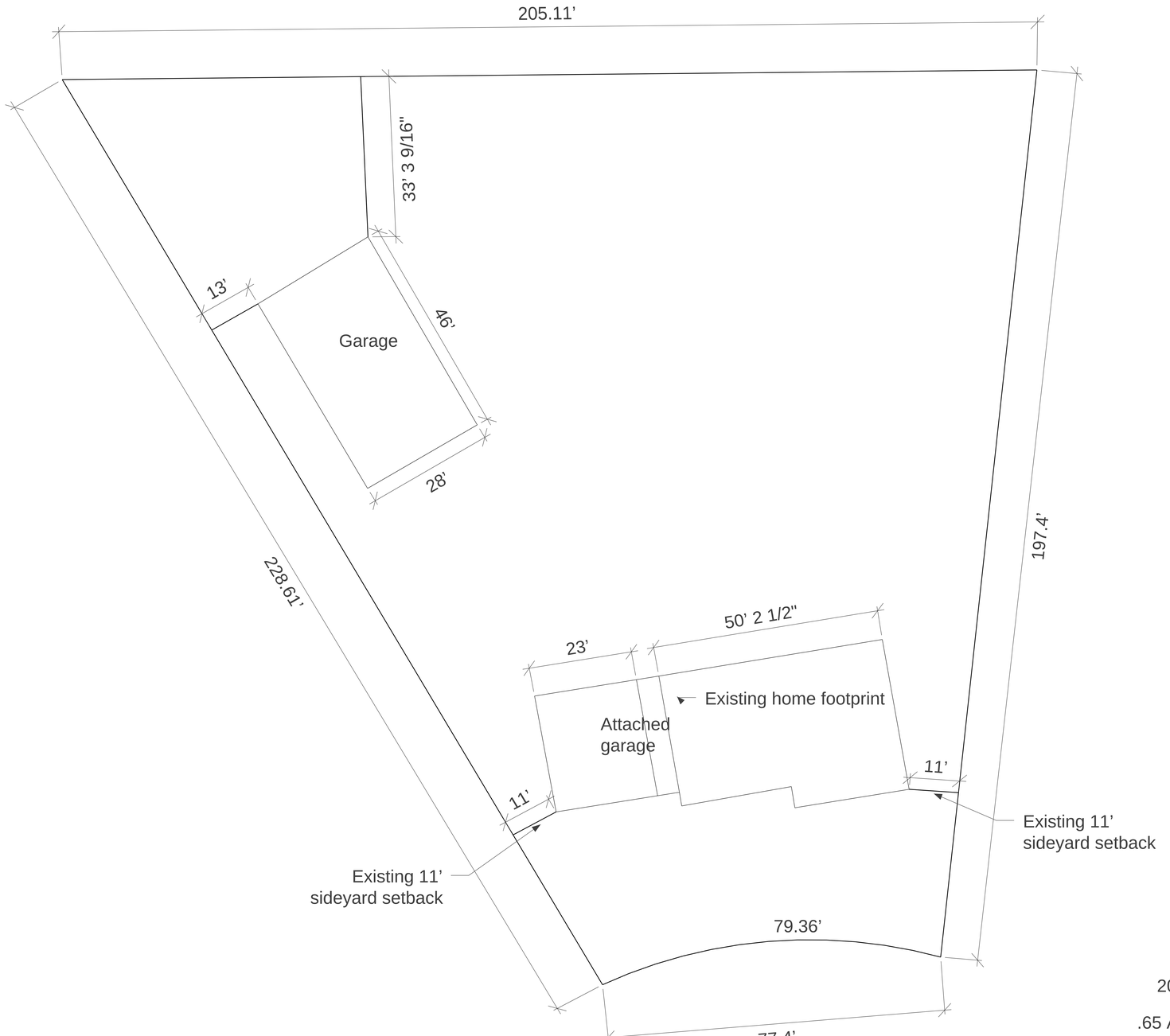

SITE PLAN

2019 E Waldo Dr.

.65 Acres= 28,314 sq ft

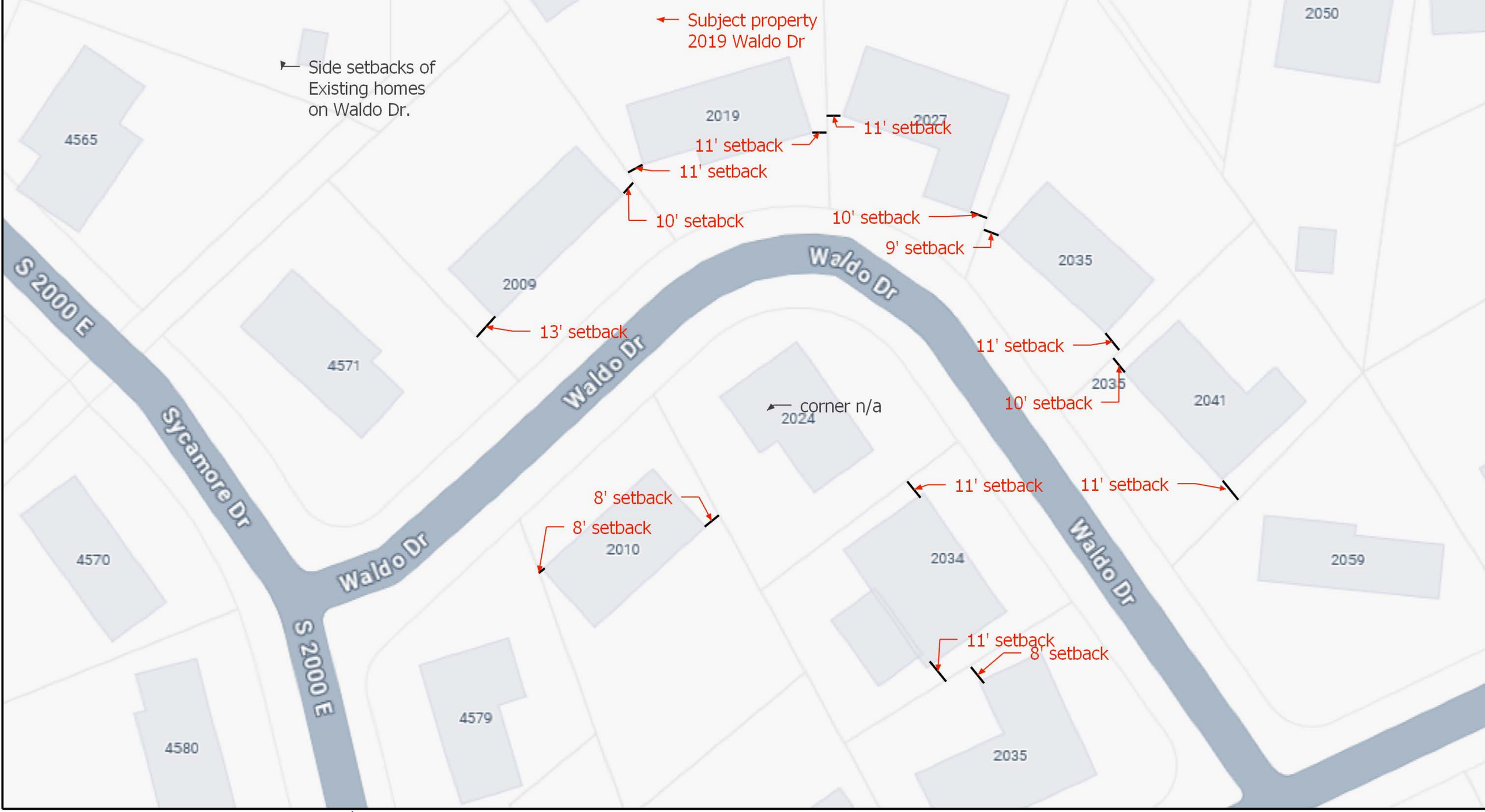
Subject property
2019 Waldo Dr
Side setbacks of
Existing homes
on Waldo Dr.
2050
4565
2019
2027
11' setback
11' setback
11' setback
10' setabck
10' setback
9' setback
2035
2009
13' setback
11' setback
4571
2035
10' setback
2041
corner n/a
2024
S 2000 E
Sycamore Dr
Waldo Dr
Waldo Dr
Waldo Dr
Waldo Dr
11' setback
11' setback
8' setback
8' setback
2010
2034
2059
4570
S 2000 E
11' setback
8' setback
4579
4580
2035

CITY OF HOLLADAY
Request for Appeal Officer Action
~~~~~~~~~~~~~~~~~~~~
February 24th 2025
Item 2

ADDENDUM FOR ADDITIONAL SECTION OF CODE REQUESTED FOR VARIANCE

Additions to report highlighted

Request: **VARIANCE FROM FRONT FENCE AND CLEAR VIEW STANDARDS AND CORNER-SIDE YARD FENCE STANDARDS**
Address: 4504 S. Holladay Circle. Holladay Utah
Applicant: Carter Shirra
File No: 25-5-03
Staff*:* Carrie Marsh, Senior Planner
Appeal Officer: Mr. Frank Nakamura

ACREAGE:	Approximately .14 acres (6,098 sq ft of land)
GENERAL PLAN DESIGNATION:	CR Country Residential
CURRENT ZONE:	R-2-10 (*Two-family in an attached dwelling per every 10,000 sq ft of land OR Two detached dwelling per every 12,500 sq. ft of land*)
CURRENT USE:	Single-Family Residential
NEIGHBORING ZONING LAND USES	North- Medium Density Residential - Stable (C-1)/ Commercial Use South- Medium Density Residential - Stable (R-2-10)/ Single Family Residence East- Medium Density Residential - Stable (R-2-10)/ Single Family Residence West- Millcreek – Mixed Use 2 (C-2)/ Commercial Use
GOVERNING ORDINANCES:	2012 Title 13.09 "Quasi-Judicial Procedures" 2007 Title 13.76 "Fences" 13.76.B "Fences in the Front Yard Area" 13.76.H "Clear View" 13.76.710.D "Fences in the Corner-Side Yard Area Abutting The Street"

REQUESTED [QUASI-JUDICIAL] ACTIONS; VARIANCE(S) TO HOLLADAY CITY'S ZONING CODES:

The Applicant is seeking relief from City of Holladay Code appertaining to fencing heights allowed in a front yard area and within clear view areas. ***The Applicant proposes to construct a six-foot fence on 4500 S. and a four-foot fence on Holladay Circle. Both fences will be located on the property line and are within the front yard area and within clear view areas of their Property,*** requiring a variance from the following zoning codes***:***
~~~~~~~~~~~~~~~~~~~~

1. To H.C.C. §§ 13.76.B which establishes a four-foot fencing height and location regulation for front yard fencing in the City, as shown in Figure §13.76.710(D1).
    a. §§13.76.B.(2) allows a height exception in the front yard on 4500 S. when compliant with a setback ratio detailed in §13.76.B.(2).(c) of either:
        i. One additional foot of fence height for each two feet that a *view obscuring* fence is setback from the property line OR
        ii. One additional foot of fence height for each one foot that a *non-view obscuring* fence is setback from the property line.

2. To H.C.C. §§ 13.76.H which establishes a two-foot height regulation for any fencing within a clear view area in the City, which is within a triangle created within 40 feet from the edges of asphalt of any street and 15 feet parallel and perpendicular to a driveway, as shown in Figure §13.76.710(H)

3. To H.C.C. §13.76.710.D which establishes a five foot height regulation for any fencing within the corner-side yard area abutting the street, as shown in Figure 13.76.710.D1

PROPERTY LOCATION AND CONTEXT:

Appertaining to a certain parcel of land (Salt Lake County Parcel #**22-04-405-111**, addressed as: **4504 S. Holladay Circle** and comprising of .**14 acres** (6,098 sq ft) in a **R-2-10 Zone** in Holladay. To be hereinafter addressed as "The Property" -- see attached zoning Vicinity Map).

The Property is located on a corner lot with 4500 S. on the North side (side yard), Holladay Circle on the East (front yard), and Highland Drive on the West (rear yard).

The existing wall in the backyard that borders Highland Drive was on the rear property line until October of 2023 when the City purchased the rear portion of the property (approximately 913 sq. ft) to facilitate widening the Highland Drive right of way to accommodate a dedicated right-hand turning lane to turn east onto 4500 South. The Applicant purchased the property in November of 2023 with the knowledge of the area that was purchased from the former owner for the right of way, and that the new property line was inside the existing wall on the rear property border, according to the new legal property description. A fence and additional marking done by the City of Holladay City Engineer was in place at the time of sell that clearly designated where the property boundary was. The details of the right of way area and the remaining parcel that was sold to the applicant is included as an attachment to this report.

The Salt Lake County Assessor has designated the lot shape as "irregular", which is defined as "Cul-de-sac or other odd shaped parcels."

Property Legal Description: *BEG S 89^53' E 86.56 FT & S 00^07' W 33 FT FR ST MON AT INTERSECTION OF 4500 S ST & HIGHLAND DR; SD MON BEING S 242.7 FT & W 2083.07 FT FR E 1/4 COR SEC 4, T2S, R1E, SLM; S89^53' E 71.45 FT M OR L; S 18^03'39" E 55 FT; S 71^56'21" W91.47 FT M OR L; N 15^39'41" W 40.45 FT; N 17^09'51" W 21.89FT; N 37^10'27" E 26.27 FT TO BEG. (BEING A PORTION OF LOT 8, HOLLADAY CIRCLE.*)

REPORT CONTENTS:

Conclusions of Law:
Staff Narrative Findings/Discussion/Recommendation;
Recommended Condition(s) of Approval;
Attachments Description(s):

CITY RECOMMENDATION:

1. ***Denial*** *of a six-foot fence within the front yard area along the public street, 4500 S., on the property line*
2. ***Denial*** *of a six-foot and four-foot fence within clear view areas at the corner of 4500 S. and Holladay Circle and at the driveway*

3. ***Denial** of a six-foot fence on the property boundary line in the corner-side yard area along 4500 S.*

BACKGROUND AND PROPOSAL:

As Variance Permits have been used to provide opportunity for an applicant to seek relief from a dimensional or quantifiable, metric standard, this request was received to ask the City to consider allowing the Applicant to exceed adopted code's allowable standard for the height and placement of fencing within the front yard area.

The request for a variance was initiated after City of Holladay Code Enforcement noticed the existing non-compliant fence in the front yard area of the property being removed and replaced. No observations were made that the applicant was maintaining the existing fence by repairing in place as there was a complete removal. There was no permit submitted for replacing the fencing. A permit is required for any fence, wall, or hedge being constructed or **reconstructed** within the setback area abutting a public street or private right of way. (H.C.C. §13.76.710). The contractor applied for a permit and regulations were reviewed for fencing heights in the front yard and clear view areas. The signed permit with diagram is included as an attachment to this report.

The applicant, Carter Shirra, has filed an appeal to the Hearing Officer requesting a variance to the above portions of Chapter 13.14 of the City of Holladay zoning ordinance. The applicant has provided a narrative detailing the reasoning for each of the required points in which a variance must meet in order to be granted.

The applicant is specifically requesting

1. A six-foot-tall fence on the property line adjacent to 4500 S. in the front yard area and
2. A 4-foot-tall fence on the property line adjacent to Holladay Circle and
3. A six-foot-tall fence on the property line adjacent to 4500 S. in the corner-side yard area

HOLLADAY CITY CODE:

The City of Holladay has specific regulations for fencing within the R-2-10 zone, detailed in Supplementary Regulations for Fences within §13.76.710.

Codes specific to the applicant's request include:

1. **13.76.710: FENCES:**
   No fence, wall, or hedge shall be erected or reconstructed unless in conformity with the regulations specified in this chapter.

   13.76.B.2(a): Fences in the Front Yard Area; Exception:
   A six foot (6') fence may be allowed when directly abutting the following public streets: 4500 South.

   and (c): Fences in the Front Yard Area; Exception:
   And, the proposed fencing complies with the setback to height ratio as shown on figure 13.76.710(B) of this section.

   FIGURE 13.76.710(B) - FENCING IN FRONT YARD AREAS

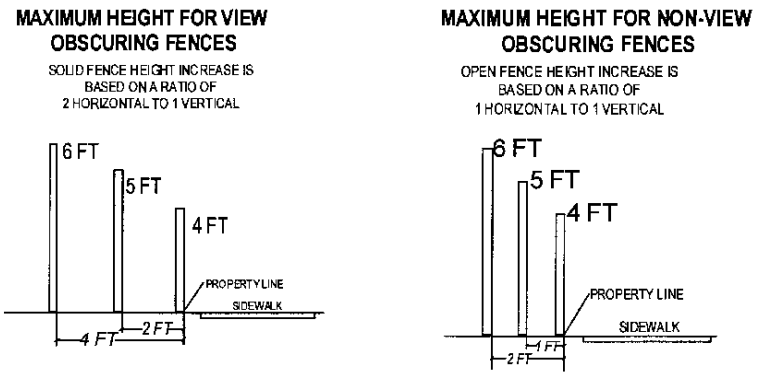

2. 13.76.710.H: Clear View

1. No obstruction in excess of two feet (2') in height shall be placed within the required clear view area of a corner lot as shown in figure 13.76.710(H) of this section.

FIGURE 13.76.710(H) - CLEAR VIEW TRIANGLES

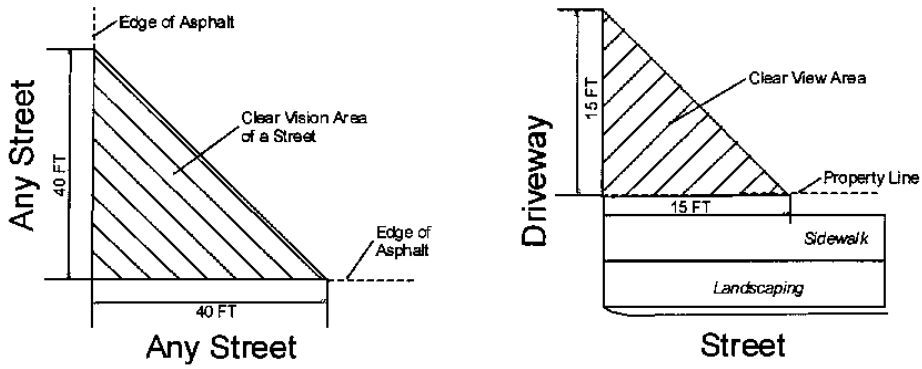

3. 13.76.710.D: Fences in the Corner-Side Yard Area Abutting The Street

1. The maximum height of a fence in the corner-side yard area as shown in figure 13.76.710(D1) of this section shall be five feet (5').

FIGURE 13.76.710(D1) - CORNER-SIDE YARD AREA[1]

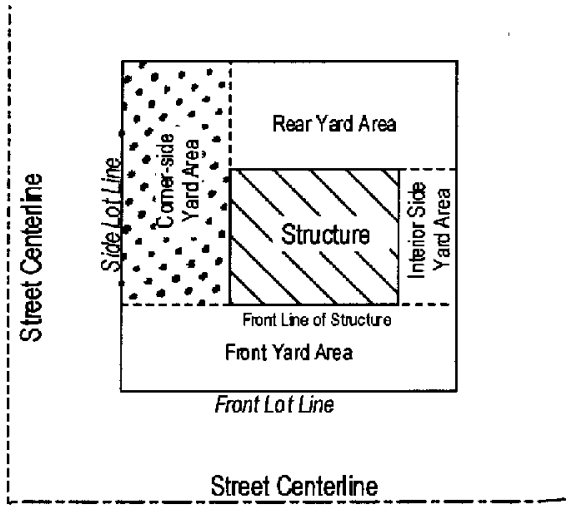

2. The community development director may approve a fence up to six feet (6') in height in the corner-side yard area if the proposed fence is set back from the property line as shown on figure 13.76.710(D2) of this section.

FIGURE 13.76.710**(D2) - FENCING HEIGHTS ON CORNER LOTS**

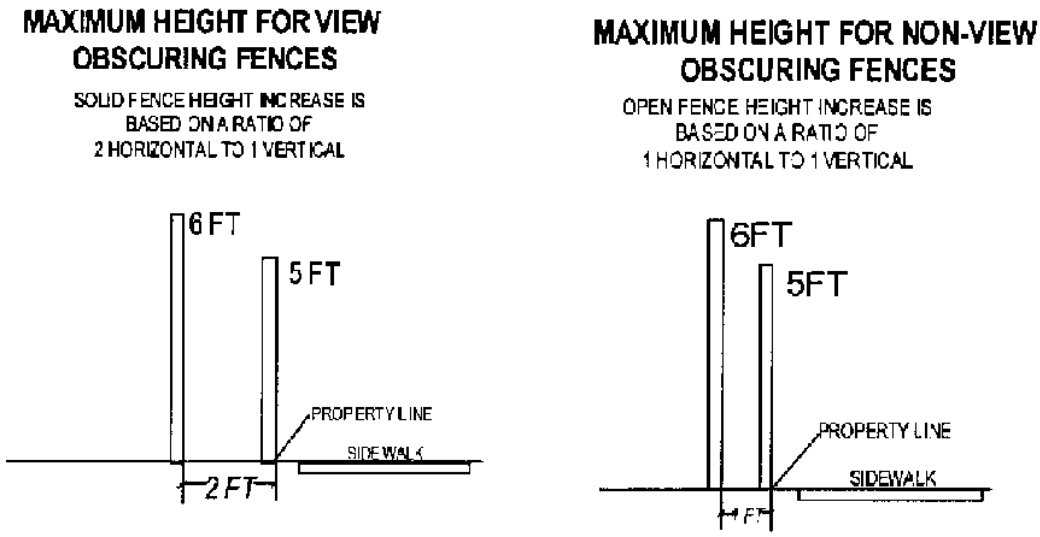

VARIANCE FROM STANDARDS

- The request for a six-foot-tall fence on 4500 S. is a variation of two additional feet for a view obscuring fence on the property line OR one additional foot for a non-view obscuring fence than what would be permitted outside of the clear view area.

- The request for a six-foot fence within the clear view area on 4500 S., 40 feet from the edge of the asphalt on Holladay Circle, is a variation of four additional feet than is permitted within a clear view area.

- The request for a four-foot fence within the clear view area on Holladay Circle, 40 feet from the edge of the asphalt on 4500 S. and within 15 feet both perpendicular and parallel to the driveway is a variation of two additional feet than is permitted with clear view areas.

- The request for a six-foot fence on 4500 S. in the corner-side yard area is a variation of one additional foot for a view obscuring fence on the property line.

As this is a Variance request, it is the obligation of the Applicant to present such facts and persuasive arguments as to convince the Officer that there exists some form of hardship or other special circumstance to justify issuance of the requested permit. The review criteria the Officer is to use in assessing the application are below. Those criteria serve as the "Conclusions of Law" [criteria] to be associated with this matter.

APPLICABLE REGULATIONS and APPROVAL STANDARDS

13-09-020: [VARIANCE] Purpose:

"Variance procedures are intended to provide a narrowly circumscribed means by which relief may be granted from particular unforeseen application of the provisions of this title that create an unreasonable hardship."

13-09-020: [VARIANCE] Authority:

"The administrative appeals officer is authorized to hear and decide variances to the provisions of this title as provided in this section."

13-09-020: Approval Standards: herein referred as Conclusions of Law

1. The administrative appeals officer may grant a variance **only if all of the following are met**:
    a. Literal enforcement of this title would cause an unreasonable hardship for the applicant that is not necessary to carry out the general purpose of this title;
    b. There are special circumstances attached to the property that do not generally apply to other properties in the same zone;
    c. Granting the variance is essential to the enjoyment of a substantial property right possessed by other property in the same district;
    d. The variance will not substantially affect the general plan and will not be contrary to the public interest; and
    e. The spirit of this title is observed and substantial justice done.
2. a. In determining whether or not enforcement of this title would cause unreasonable hardship under subsection E1a of this section, the administrative appeals officer may not find an unreasonable hardship unless the alleged hardship:
        (1) Is located on, or associated with, the property for which the variance is sought; and
        (2) Comes from circumstances peculiar to the property, not from conditions that are general to the neighborhood.
    b. The administrative appeals officer may not find an unreasonable hardship if the hardship is self-imposed or economic.
3. In determining whether or not there are special circumstances attached to the property under subsection E2a of this section, the administrative appeals officer may find that special circumstances exist only if the special circumstances:
    a. Relate to the hardship complained of; and
    b. Deprive the property of privileges granted to other properties in the same zone.
4. The applicant shall bear the burden of proving that all of the conditions justifying a variance have been met.
5. The administrative appeals officer may not grant a use variance.
6. In granting a variance, the administrative appeals officer may impose additional requirements on the applicant that will:
    a. Mitigate any harmful effects of the variance; or
    b. Serve the purpose of the standard or requirement that is waived or modified.

STAFF DISCUSSION and RECOMMENDATION:
(Staff does not vote on these matters and acts only in an advisory position on the technical aspects of the application.)

Variances are traditionally offered zoning tools used as remedies to seek jurisdictional waivers or reductions of quantifiable, measurable development code requirements (e.g., setbacks, property dimensions, height standards, min. or maximum quantities or sizes, etc.) with which compliance in a given situation could not be attained due to site constraints (such as unusual topography) inherent to a property, rather than being the result of an applicant's own action(s)/development desires. Normally, economic considerations or "self-imposed hardships" or predicaments are not qualifying grounds to support a Variance application or its approval.

In Holladay, in order to justify a Variance Permit request, an applicant is tasked with arguing successfully to the City's Administrative Appeals Officer (aka Hearings Officer/Examiner) that there is some aspect of the Property that physically, topographically or based on code requirements puts them at a disadvantage

in trying to accomplish what they wish in comparison to like properties -- especially in the surrounding area.

Each Variance application is reviewed on a case by case basis and the merits of the matter are weighed in the public venue. Any received public testimony received in response to notification provided via a public notice and City's websites and any comments or recommendations by City departments or outside agencies have been submitted to the Administrative Appeals Officer for their consideration.

If the Officer believes that there is no real topographical hardship associated with a Variance application (e.g., a river, a highway, hazardous or environmentally sensitive area, hillside or mountain impeding reasonable use and/or development of a property), then left to the applicant is the opportunity to argue that there is a "special circumstance unique to the site and situation that justifies their request".

The Officer is at liberty to approve or deny a Variance. And, their decision should not necessarily be construed as setting precedent, as discussions and findings are unique to the property does binds an officer to vote the same way twice. Still, consistency is a desirable goal when dealing with case by case Variance requests. As a Variance decision is a "quasi-judicial" matter, any vote to approve or deny should, and will be accompanied by a reasoned statement listing the rationale for the decision made.

The Applicant is seeking a Variance to **H.C.C. § 13.76.710.B.(2**) & **H.C.C § 13.76.710.H & H.C.C § 13.76.710.D** which require specific fencing heights in the front yards and clear view areas at corners and driveways and in corner side yards. The perceived need for the variance was determined at a point in time where the Applicant approached the City for a building permit for the reconstruction of a non-compliant fence in the front yard, as required by §13.76.710 in response to direction from City of Holladay Code Enforcement.

The Applicant has submitted a variance Application form, an Affidavit of Property Ownership, a justification statement, a site plan, and responses to each of the five required standards for approval. Staff has supplemented that documentation with aerial imagery of the Property and surrounds (courtesy of ArcGIS and Google), a plat map copy, and any correspondence from governmental agencies/departments and/or the public respecting the Variance matter that was provided to our office in a timely enough fashion so as to be presented with (and attached) to this report.

The following general points can be made in relation to this specific variance request:

1. Non-compliant fences are present throughout the City, but any reconstruction requires conformity with current fence standards
    a. This requirement results in non-compliance to be addressed and reduced over time instead of expanded and continued.
    b. Non-compliant structures that deteriorate over time or are voluntarily removed cannot be reconstructed
    c. Reconstruction of a non-compliant structure is not permitted unless it is non-voluntarily destroyed (by a fire or other disaster)
2. Fencing permits are required for fencing in front yard areas and corner side yards abutting a street to ensure compliance with fencing standards; Expanding non-compliance does not create an authorized non-conformity.
    a. Fencing on this property was originally partially compliant with clear view standards seen in a 2007 Google Street view and non-permitted additional height and view obstructing material was added between that time frame and a July 2011 Google Street view, with further replacement seen in a June 2017 and 2022 Google Street views (see attachments).

    b. Fences constructed in a front yard without a permit are not expressly accepted by the City and those that don't meet standards are considered to be violations of City Code.
    c. Fences constructed in a corner-side yard abutting a street without a permit are not expressly accepted by the City and those that don't meet standards are considered to be violations of City Code.
3. 4500 South is identified as a Major Arterial Road, serving as a principal network for through-traffic or traffic traveling across town and is also a state highway, maintained by UDOT. (See City Transportation network map in attachments.)
    a. One of the primary goals of the City's vehicle network is to ensure safety of all users (see page 24 of the General Plan, included in attachments).
    b. Implementation measures relevant to this application include integration of urban design principles to create streetscapes that integrate accessibility of citywide destinations for all modes of travel, pedestrian scale, and key scenic vistas (see page 25 of the General Plan, included in attachments).
4. Current zoning code for fences allows for exceptions for increased height in the front yard along 4500 S., with the condition that a taller fence be moved further from the property line.
    a. Moving taller fencing from a property line in a front yard along the designated streets allows for landscaping and other space for pedestrian comfort along sidewalks and helps reduce harsher visual impacts of 6' fencing along the specifically designated streets.
5. Current zoning code allows for a 4' fence in the front yard, outside of the clear view triangle.
6. Current zoning code for fences in the corner-side yard area allows for exceptions for increased height over the allowed five feet, with the condition that a taller fence be moved back two feet from the property line.
    a. Moving taller fencing from a property line in a corner-side yard along an abutting street allows for landscaping and other space for pedestrian comfort along sidewalks and helps reduce harsher visual impacts of 6' fencing in close proximity to a right of way.
7. Obstructions within clear view areas present a significant safety hazard for the public and private property owners entering roadways. Visibility at driveways and intersections provide increased safety to serve the public good and prevent pedestrian and automobile collisions.
    a. Maintaining clear view at an intersection in close proximity to a major intersection, along a highly trafficked road, and on a slight slope is essential for public safety.
8. Purchasing a property along busier roadways and at intersections acknowledges the impacts, or nuisances, that come with those roadways including sound, smells, and other impacts from higher pedestrian and vehicular use.
9. Front yard fencing with increased heights and disregarding clear view areas applied throughout the City could be seen as an improvement to each property owner's personal enjoyment of their property, however, front yard fencing does not improve the overall intent to increase pedestrian and transportation safety or overall character of residential neighborhoods.
    a. A fenced front yard beyond the standards within the code is not a property right enjoyed by other property owners of property similar in size throughout the City.
10. Compliance with City adopted codes is expected/required and it not a prevailing reason to grant a variance.
    i. Improvements to properties is welcome in any jurisdiction. And while the improvements may be of a lesser or greater caliber, designs or construction that are crafted and implemented are still expected to meet code.
11. No hard evidence suggests that the City Engineer, Fire Marshal, Building Code Official, or Planning and Zoning has approved or will approve the existing/proposed front yard and clear view and corner-side yard fence height; and,
12. Irrespective of a possible diminishment of the increased fence height sought by the Applicant, the owner will still have substantial use and enjoyment of their land (and its amenities) commensurate with neighboring property owners' opportunities.

STAFF RESPONSE TO EACH OF THE FIVE APPROVAL STANDARDS FOR VARIANCES:

1. *Literal enforcement of this title would cause an unreasonable hardship for the applicant that is not necessary to carry out the general purpose of this title;*
    a. Hardships are typically features of the land that limit the building area which other property owners enjoy. While the backyard area of this particular property is smaller than similar properties, small backyards are a common feature of corner properties. Corner properties require larger corner side yard setbacks of 20 feet, which often compensates for some of the reduced rear yard area.
2. *There are special circumstances attached to the property that do not generally apply to other properties in the same zone;*
    a. The property being bounded by three roadways and a backyard that has been reduced to less than a standard rear-yard setback could be considered a special circumstance associated with the property. However, the zoning ordinance related to fencing still accounts and allows for increased fencing height in corner-side yards and front yard fencing, while also balancing public safety. The size of the property alone does not create a special circumstance as many properties within R-2-10 zoning have smaller yards. This property is 152 sq. ft smaller than the minimum property size required.
3. *Granting the variance is essential to the enjoyment of a substantial property right possessed by other property in the same district;*
    a. Single-family uses within the R-2-10 zone have smaller lot sizes and, smaller yards including back yards. Standards for front yard fencing and clear view areas and corner-side yards are applied equally across all properties within the zone. Corner properties within R-2-10 zones have smaller backyards and larger corner side yards.
4. *The variance will not substantially affect the general plan and will not be contrary to the public interest; and*
    a. The variance would affect the General Plan's intent to balance privacy on the private property side of fences along the City's major arterials with the public need for maintaining the historically open, green, and verdant street edges. (See page 22 of the General Plan)
    b. The variance for increased height in clear view areas and along corner-side yards is contrary to the public interest
5. *The spirit of this title is observed and substantial justice done.*
    a. The spirit of the zoning ordinance is not being observed within the applicants request as the ordinance already provides for variability and flexibility to produce important outcomes including the protection of natural features, aesthetically pleasing streetscapes, among others.

RECOMMENDATION:

1. To be eligible for a Variance Permit, City code/law demands that a project be "justified on all fronts". Among the qualifying criteria (cited on page 4 of this report) is the following standard (by way of reiteration): **"13-09-020: Approval Standards: 2.b.** "*The administrative appeals officer may not find an unreasonable hardship if the hardship is self-imposed or economic.*" and **3.a. and b.:** "*In determining whether or not there are special circumstances attached to the property under subsection E2a of this section, the administrative appeals officer may find that special circumstances exist only if the special circumstances:*
    a. Relate to the hardship complained of; and
    b. Deprive the property of privileges granted to other properties in the same zone."

Given the assessment above, and having to choose whether to recommend positively or negatively on this matter, Staff recommends:

a. **Denial of the requested variance to front yard fence height and location standards**
b. **Denial of the requested variance to clear view fence height standards**
c. **Denial of the requested variance to corner-side yard fence height standards**

SPECIFIC STAFF FINDINGS AND ANALYSIS

1. The Property made the subject of this Variance request is located within the incorporated limits of the City of Holladay; and,

2. The Property, sized at .14 acres (6,048 sq. ft), comprises of the *remaining portion* of a lot within the Holladay Circle Subdivision. The property was originally platted at the same time [1946] as neighboring properties, and similarly affected by right of way improvements that have occurred since the original plat as with other properties. The property is the same size as the corner property across the street and is comparable in size and irregular shape to other corner properties located in the immediate vicinity with the same right of way impacts. The property is unique in that it is bounded by three roads. The property is relatively flat and otherwise unremarkable.

3. The Property is within the boundaries of the City's R-2-10 Zone (6,250 sq. ft. min. property size for a single family detached dwelling); and,

4. The Property is considered to be legally non-conforming to the minimum lot size required for a single-family detached structure within the R-2-10 zone; and,

5. The Property is not understood to be in a floodplain nor adjacent to a protected waterway; and,

6. The Applicant either has a controlling interest in the Property and is authorized to represent the same; and,

7. As authorized and mandated according to Utah statute, the City has adopted a comprehensive zoning ordinance that applies to all properties within the City's incorporated limits; and,

8. The City's zoning ordinance requires that properties (i.e., lots or parcels) in the R-2-10 Zone comply with all relevant zoning code requirements appertaining thereto -- save as may be exempted by virtue of a given legal property's age under certain specific legal non-conforming rules; and,

9. That the City's adopted zoning ordinance iterates the fencing height, location, and clear view standards for properties in the R-2-10 Zone to which the Applicants' proposed project is, and would be, subject to as follows:

   TITLE 13.76.710.B.(2)(a) and (c): Fences in the Front Yard Area; Exception; Specific sections previously detailed in the "Holladay City Code" section of this report

   Title 13.76.710.H: Clear View; Specific sections previously detailed in the "Holladay City Code" section of this report

   TITLE 13.76.710.D: Fences in the Corner-Side Yard Area Abutting The Street; Specific sections previously detailed in the "Holladay City Code" section of this report

10. The Applicant seeks approval of a Variance Permit to allow **1)** two feet of increased fencing height on the property boundary on 4500 S. than allowed by code, **2)** four feet of increased fencing height in the clear view area, on the property boundary on 4500 S., and **3)** two feet of increased fencing height in the clear view areas on the property boundary on Holladay Circle. **4)** one additional foot of increased fencing height in the corner-side yard area, on the property boundary on 4500 S.

11. The Applicant has submitted to the City a complete Variance Permit Application together with a/the requisite fee, and the City has received the application and determined that the Applicant has standing to present and the application is complete and process worthy; and,

12. The Variance Application is being processed in conjunction with procedures compliant with the Utah Land Use Development and Management Act, and Holladay Zoning Ordinance standards appertaining to such an application type, including notification requirements; and,

13. Variances, as a rule, are not to be issued simply for economic reasons or for mere convenience. They shall not be considered a right or special privilege, but may be granted to an applicant only upon a showing of undue hardship because of special or peculiar characteristics applicable to a property which deprive it of development privileges commonly enjoyed by other properties in the same zone or district; and,

14. Further, a statement has been provided that attempts to justify the Variance request as some type of topographical or other physical site hardship or special circumstance that restricts property development or "buildout" or use of land as allowed to other City properties or as granted already to City properties developed and/or used in similar fashion to the plan(s) of the Applicant; and,

15. No correspondence from City departments or outside agency regarding the Variance Application has/had been received by 1 pm, Thursday, February 20, 2025[finalization of report]; and,

16. City division/department or outside agency comments or recommendations not herein iterated may be presented during the hearing for this matter; and,

17. Direct physical impact on the general public by this request is foreseen by virtue of this request were it to be approved; expected impact would center, rather, on the question any approval raises as to its propriety -- possibly including a perceived setting of (i.e., psychological) precedence for similar front yard fence height and clear view area code deviations given compliance to these standards demonstrated by other persons/parties in the City or impacts on immediate neighbors and,

18. With respect to the matter made the subject of this report, Applicant(s), per their narrative summarily and specifically argue:

    > That replacement of the non-compliant fence is necessary for the security and privacy of their home and to utilize their front yard as a vital space for their use. The applicant also argues that the requested fencing is necessary for security, privacy, protection from snow plows and traffic, and the safety and enjoyment of a yard for their dog.

19. Physical, adverse impacts to non-adjacent property owners or the City at large would presumably be generated should the Variance be approved.; and,

20. Variance approval would have bearing on the zoning [R-2-10] of/for the Property; and on the General Plan's setting of/for the area in which the Property is located; and,

21. Any Variance approved would carry/run with the land so as to inure to successors to/of the Applicants; and,

22. Attached to this report is all of the information of relevance to this matter and report preparation by Staff by the time this report was ready to go to print (3 pm, February 20, 202)

RECOMMENDED CONDITIONS(S) OF APPROVAL

ORDER TO DENY:

Should the Administrative Appeals Officer order the/this Variance request to be denied, the Staff recommends that they/you consider imposing the following requirement(s) on/against the Applicants and Property:

1. Applicant(s) shall cause their project (and plans thereof) to be revised as necessary to assure compliance with City adopted codes – including zoning ordinance standards that govern property coverage; and,

<2. Any condition(s) as may be imposed by the Officer…>

ORDER TO APPROVE:

Should the Administrative Appeals Officer order the/this Variance request to be approved, then Staff recommends that they/you consider imposing the following Condition(s) of Approval against the same:

Generally:

1. Applicant(s) shall comply with all applicable requirements [including obtaining a Building Permit and, as required, any associated sub-permits and/or engineering work/reports/stamps/plan details (including proposed permeable surface construct), etc.] as may be imposed by City departments or outside agencies involved in the review of this request) as the Variance(s) approval(s) do/does not, and shall not, have the affect of abrogating requirements from those agencies or City divisions/departments; and,

<2. Any condition(s) as may be imposed by the Officer…>

ATTACHMENTS

- Copy of Variance Application
- Copy of Applicants' narrative/justification letter
- Copy of Property site plan
- Copy of ArcGIS aerial image of Property and surrounds
- Copy of 1942 Holladay Circle plat section showing Property as originally platted
- Copy of contracts and legal descriptions associated with the acquisition of a portion of the originally platted property showing dates and ownership
- Copy of permit issued by City of Holladay with specific requirements to be met
- Street view images referenced in report
- Copy of Traffic network map
- Copy of relevant General Plan pages (Link to full General Plan)

CITY OF HOLLADAY
COMMUNITY AND
ECONOMIC DEVELOPMENT DEPARTMENT
4580 South 2300 East
Holladay, Utah 84117
801.527.3890

NOTICE of PUBLIC MEETING
APPEAL OFFICER

BERMONDSEY PARTNERS, LLC

9055 S 1300 E

84094

CITY OF HOLLADAY
40°40'16.59"N 111°49'30.40"W EST. 1849 INC. 1999

CITY OF HOLLADAY
COMMUNITY AND
ECONOMIC DEVELOPMENT DEPARTMENT
4580 South 2300 East
Holladay, Utah 84117
801.527.3890

NOTICE of PUBLIC MEETING
APPEAL OFFICER

BERMONDSEY PARTNERS, LLC

9055 S 1300 E

84094

CITY OF HOLLADAY
40°40'16.59"N 111°49'30.40"W EST. 1849 INC. 1999

CITY of HOLLADAY

NOTICE OF A PUBLIC MEETING BEFORE THE CITY OF HOLLADAY

Date: **Tuesday, February 24th 2025**
Time: **approx. 9:30 am**
Location: **City Hall – City Council Chambers**
Hearing Body: **Administrative Hearing Officer**

Notice is hereby given that on **Monday, Feb. 24th at 9:30 am** in the City Council Chambers in City Hall located at 4580 South, 2300 East in Holladay, Utah, a public meeting will be convened before the City of Holladay Administrative Appeals Officer regarding a land use Variance Permit Application request submitted to the City by **Carter Shirra,** owner of property addressed as **4504 S. Holladay Circle** in Holladay. *Appeal for a variance from:*

1. *Front yard fencing standards and provisions as set forth in Holladay Ordinance §13.76.710.B.(2).(c) and*
2. *Clear view fencing standards and provisions as set forth in Holladay Ordinance §13.76.710.H.(1) and (2)*

ATTENTION: This notice was mailed on 02/13/2025 by order of the Community and Economic Development Director, Jonathan Teerlink, to all residents within 500 feet from the subject property. If you are not the owner of your residence, please notify the owner regarding this matter. Thank you.

CITY of HOLLADAY

NOTICE OF A PUBLIC MEETING BEFORE THE CITY OF HOLLADAY

Date: **Tuesday, February 24th 2025**
Time: **approx. 9:30 am**
Location: **City Hall – City Council Chambers**
Hearing Body: **Administrative Hearing Officer**

Notice is hereby given that on **Monday, Feb. 24th at 9:30 am** in the City Council Chambers in City Hall located at 4580 South, 2300 East in Holladay, Utah, a public meeting will be convened before the City of Holladay Administrative Appeals Officer regarding a land use Variance Permit Application request submitted to the City by **Carter Shirra,** owner of property addressed as **4504 S. Holladay Circle** in Holladay. *Appeal for a variance from:*

1. *Front yard fencing standards and provisions as set forth in Holladay Ordinance §13.76.710.B.(2).(c) and*
2. *Clear view fencing standards and provisions as set forth in Holladay Ordinance §13.76.710.H.(1) and (2)*

ATTENTION: This notice was mailed on 02/13/2025 by order of the Community and Economic Development Director, Jonathan Teerlink, to all residents within 500 feet from the subject property. If you are not the owner of your residence, please notify the owner regarding this matter. Thank you.

4504 S. Holladay Circle Fencing Standards Variance

2/13/2025

1:516

0 0 0.01 0.01 mi

0 0.01 0.01 0.02 km

Subject Property

Parcel Boundaries

World Imagery

Low Resolution 15m Imagery

High Resolution 60cm Imagery

High Resolution 30cm Imagery

Citations

15cm Resolution Metadata

Esri Community Maps Contributors, Murray City GIS, County of Salt Lake, Utah Geospatial Resource Center, © OpenStreetMap, Microsoft, Esri, TomTom, Garmin, SafeGraph, GeoTechnologies, Inc, METI/NASA, USGS, Bureau of Land Management, EPA, NPS, US Census Bureau, USDA, USFWS, Salt Lake County, Maxar, Microsoft

4504 S. Holladay Circle Fencing Standards Variance

2/13/2025

1:516

0 0 0.01 0.01 mi

0 0.01 0.01 0.02 km

Subject Property

Parcel Boundaries

World Imagery

Low Resolution 15m Imagery

High Resolution 60cm Imagery

High Resolution 30cm Imagery

Citations

15cm Resolution Metadata

Esri Community Maps Contributors, Murray City GIS, County of Salt Lake, Utah Geospatial Resource Center, © OpenStreetMap, Microsoft, Esri, TomTom, Garmin, SafeGraph, GeoTechnologies, Inc, METI/NASA, USGS, Bureau of Land Management, EPA, NPS, US Census Bureau, USDA, USFWS, Salt Lake County, Maxar, Microsoft

ZONING MAP

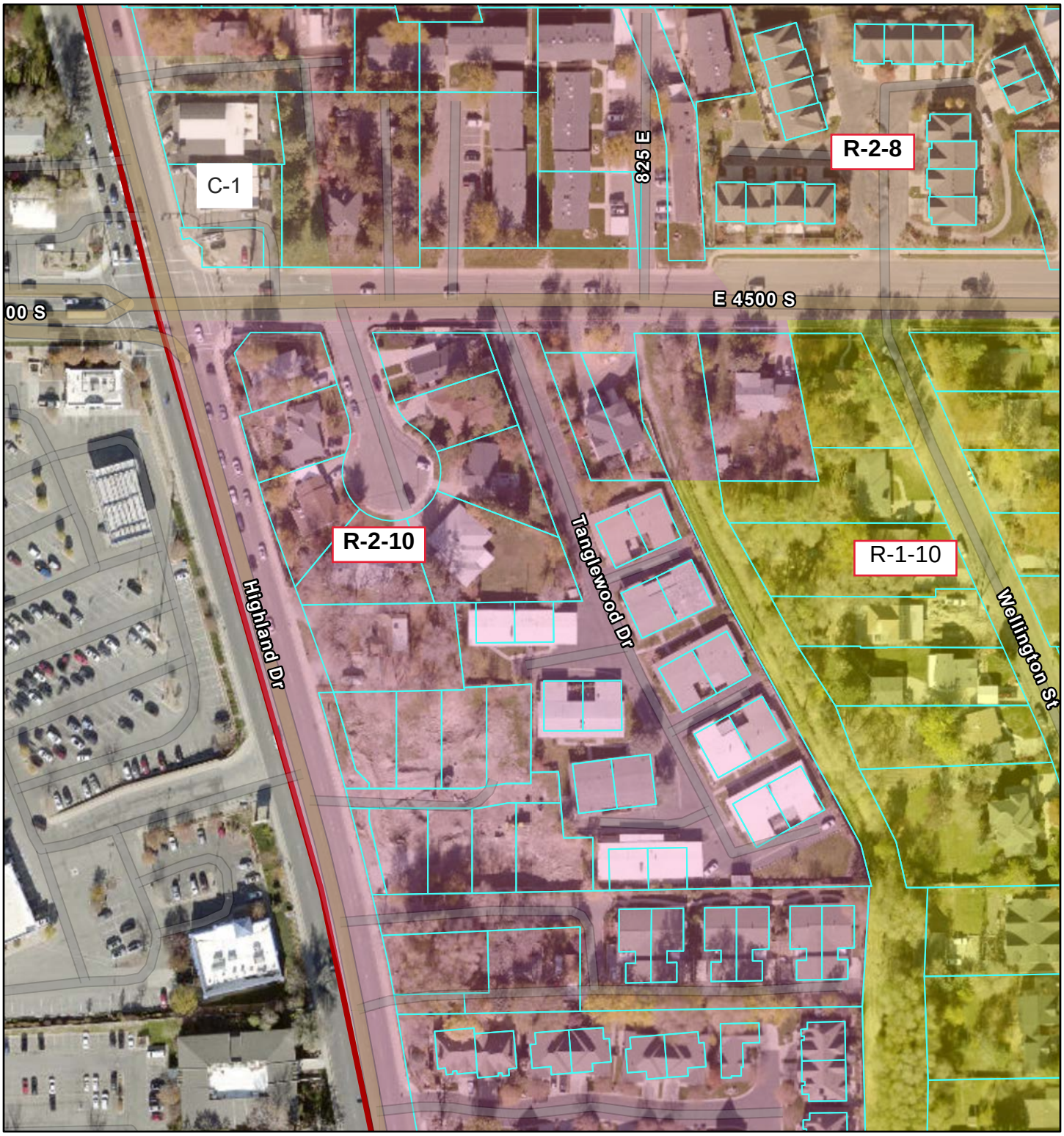

2/20/2025

1:2,261

Parcel Lines

Holladay Zones

- C-1
- R-1-10
- R-2-10
- R-2-8
- R-M

Holladay City Boundary

World Imagery

Low Resolution 15m Imagery

High Resolution 60cm Imagery

High Resolution 30cm Imagery

Citations

60cm Resolution Metadata

0 0.01 0.03 0.05 mi

0 0.02 0.04 0.09 km

Esri Community Maps Contributors, Murray City GIS, County of Salt Lake, Utah Geospatial Resource Center, © OpenStreetMap, Microsoft, Esri, TomTom, Garmin, SafeGraph, GeoTechnologies, Inc, METI/NASA, USGS, Bureau of Land Management, EPA, NPS, US Census Bureau, USDA, USFWS, Salt Lake County, Maxar

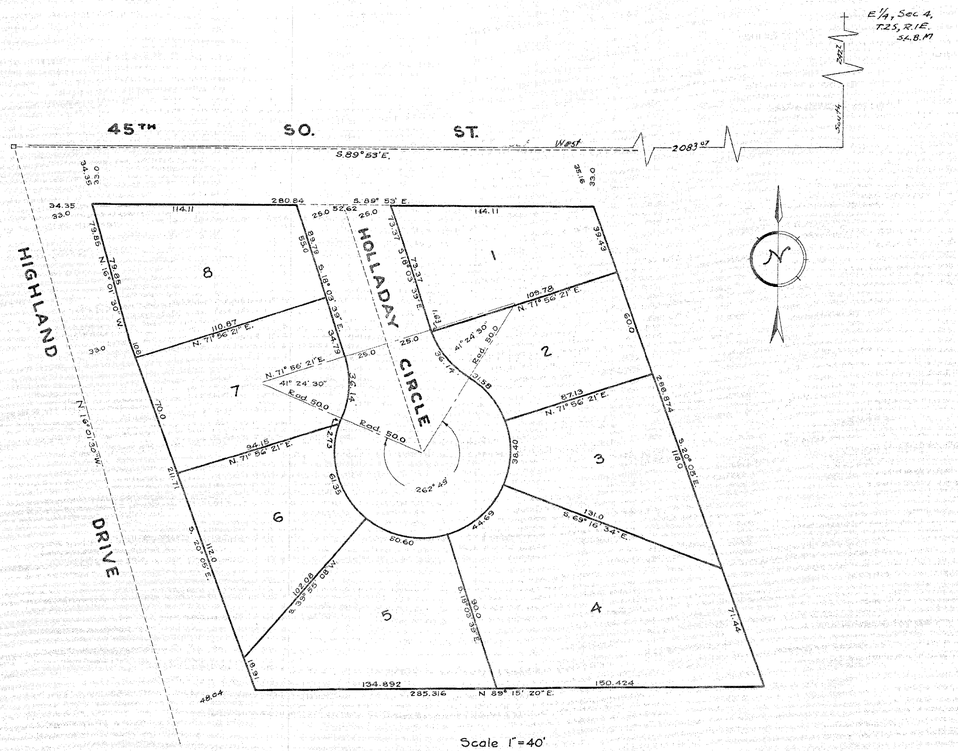

Scale 1"=40'

PLAT OF

HOLLADAY CIRCLE

A SUBDIVISION
OF PART OF THE S.E. QUARTER
OF SEC. 4, T.2S, R.1E.
S.L.B.&M.

SURVEYOR'S CERTIFICATE

I, John V. Bollwinkel, a registered land surveyor as prescribed under the laws of The State of Utah and holding certificate # 940, hereby certify that the tract of land shown on plat and owned by S. W. Pederson is described as follows:

Beginning at a point which is 34.35 ft. East and 34.35 ft 5.16 ft from the county monument at Highland Drive and 45TH So. St., which monument is 242.7 ft. South and 2083.07 ft West from the E. 1/4 Cor. Sec. 4, T 2S, R1E, S.L.B.&M., thence S. 89°53'E. 280.84 ft., thence S.20°05'E. 288.874 ft, thence S.89°15'20"W. 285.316 ft., thence N. 20° 05' W. 211.71 ft, thence N.16° 01'30"W. 798.5 ft to the place of beginning: that I have by authority of said owner subdivided said land into lots and streets to be hereafter known as Holladay Circle - a subdivision, and that the same has been correctly staked and is as shown on this plat.

Date June 6, 1946

John V. Bollwinkel

OWNER'S DEDICATION

Know all men by these presents that I, S.W. Pederson owner of the above described tract of land, having caused same to be subdivided into lots and streets to be hereafter known as Holladay Circle - a subdivision, do hereby dedicate for the perpetual use of the public all parcels of land shown on this plat as intended for public use.

S. W. Pederson

ACKNOWLEDGMENT

State of Utah }
County of Salt Lake } S.S.

On this 22nd day of July A.D. 1946, personally appeared before me, the undersigned notary public, in and for said county of Salt Lake of said state of Utah, S. W. Pederson, the signer of the above instrument who duly acknowledge that it was signed freely and voluntarily and for the use and purpose therein mentioned.

Residing in Salt Lake City, Utah

My commission expires 7-13-48

Marjorie S. Smith
NOTARY PUBLIC

COUNTY SURVEYOR'S CERTIFICATE

I hereby certify that I have examined this plat and the stakes on the ground and have found same correct and in accordance with information on file in this office.

Date 7-31-46

J Russell Thayn
COUNTY SURVEYOR

APPROVAL

Approved and accepted by the board of County Commissioners of Salt Lake County, Utah, this 26 day of July, A.D. 1946.

ATTEST

Clerk Kempster
COUNTY CLERK

Guy Lane
CHAIRMAN BOARD OF COUNTY COMMISSIONERS

Nº 1052393
STATE OF UTAH :: COUNTY OF SALT LAKE
FILED AND RECORDED AT THE REQUEST OF
S.W. PEDERSON
AUG. 14. 1946 AT 1:35 P.M. IN BOOK J OF PLATS, PAGE 110
FEE $
Cornelia S. Lund
COUNTY RECORDER

APPROVAL John M. Pell
COUNTY PLANNING COMMISSION ENGINEER

APPROVED AS TO FORM
COUNTY ATTORNEY

J 110

J-110

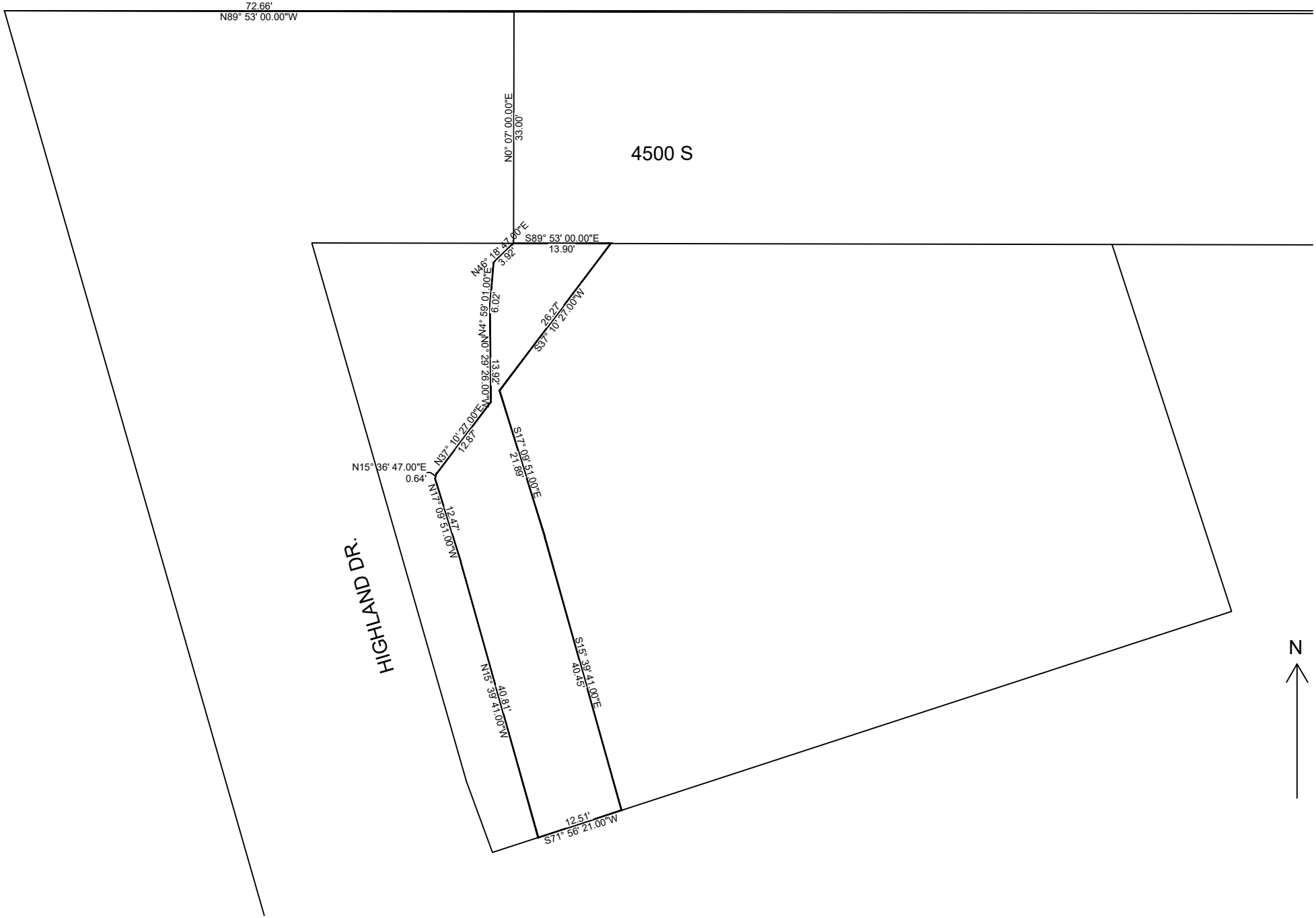
72.66'
N89° 53' 00.00"W
N0° 07' 00.00"E
33.00'
4500 S
S89° 53' 00.00"E
13.90'
N46° 18' 47.00"E
3.92'
N4° 01' 59.00"E
6.20'
N0° 29' 26.00"W
13.92'
26.27'
S37° 10' 27.00"W
N37° 10' 27.00"E
12.67'
N15° 36' 47.00"E
0.64'
N17° 09' 51.00"W
12.47'
S17° 09' 51.00"E
21.89'
HIGHLAND DR.
N15° 39' 41.00"W
40.81'
S15° 39' 41.00"E
40.45'
12.51'
S71° 56' 21.00"W
N

November 2, 2023

4504 S Holladay Blvd

Requested Lot Remainder Description

Beginning at a point on the north line of Lot 8 – Holladay Circle Subdivision (recorded Book J-110), said point being South 89°53’00” East, 86.56 feet and South 00°07’00” West, 33.00 feet from the Monument at the Intersection of 4500 South and Highland Drive; said monument being South, 242.7 feet and West 2083.07 feet from the East Quarter Corner of Section 4, Township 2 South, Range 1 East, Salt Lake Base and Meridian according to the afore mentioned recorded Holladay Circle Subdivision Plat; and running thence South 89°53’00” East, 71.45 feet; thence South 18°03’39” East, 55.00 feet; thence South 71°56’21” West, 91.51 feet; thence North 15°39’41” West, 40.45 feet; thence North 17°09’51” West, 21.89 feet; thence North 37°10’27” East, 26.27 feet to the point of beginning.

Contains: 6,048 Sq Ft more or less

September 27, 2023

4504 S Holladay Blvd

Requested City Description

Beginning at a point on the north line of Lot 8 – Holladay Circle Subdivision (recorded Book J-110), said point being South 89°53’00” East, 72.66 feet and South 00°07’00” West, 33.00 feet from the Monument at the Intersection of 4500 South and Highland Drive; said monument being South, 242.7 feet and West 2083.07 feet from the East Quarter Corner of Section 4, Township 2 South, Range 1 East, Salt Lake Base and Meridian according to the afore mentioned recorded Holladay Circle Subdivision Plat; and running thence South 89°53’00” East, 13.90 feet; thence South 37°10’27” West, 26.27 feet; thence South 17°09’51” East, 21.89 feet; thence South 15°39’41” East, 40.45 feet; thence South 71°56’21” West, 12.51 feet; thence North 15°39’41” West, 40.81 feet; thence North 17°09’51” West, 12.47 feet; thence North 15°36’47” East, 0.64 feet; thence North 37°10’27” East, 12.87 feet; thence North 00°29’26” West, 13.92 feet; thence North 04°59’01” East, 6.02 feet; thence North 46°18’47” East, 3.92 feet to the point of beginning.

Contains: 913 Sq Ft more or less

4504 S Holladay Blvd

Share

1804 4500 S
Millcreek, Utah
Google Street View
Aug 2007 See latest date

4504 S Holladay Blvd

Share

1775 E 4500 S
Holladay, Utah
Google Street View
Aug 2011 See latest date

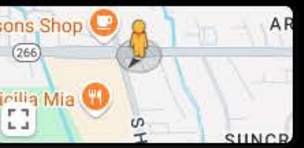

Oct 2024

Dec 2022

Apr 2021

Jul 2018

Jun 2016

Aug 2015

Aug 2014

Aug 2011

Jun 2008

Jul 2007

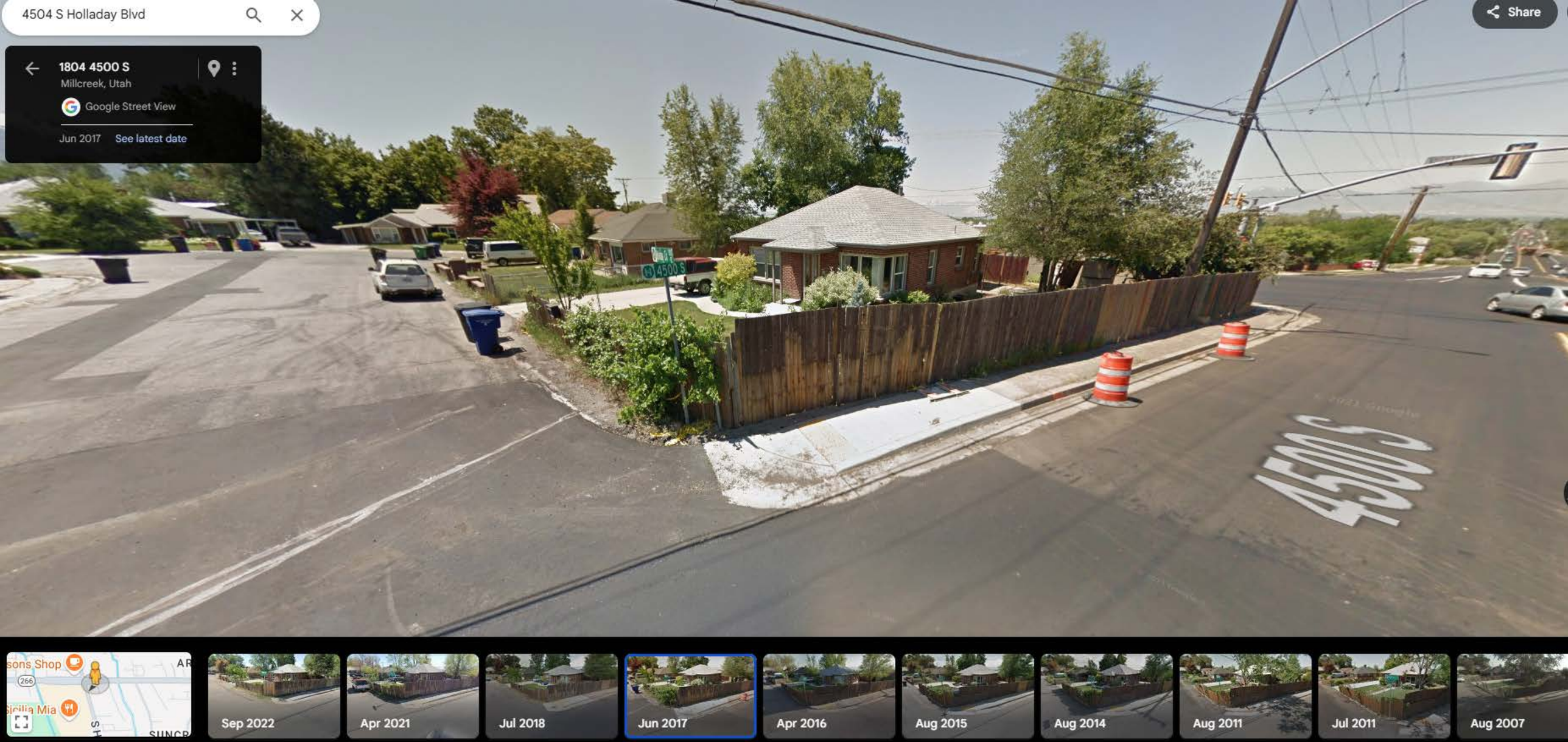
4504 S Holladay Blvd
Share
1804 4500 S
Millcreek, Utah
Google Street View
Jun 2017
See latest date
4500 S
Sep 2022
Apr 2021
Jul 2018
Jun 2017
Apr 2016
Aug 2015
Aug 2014
Aug 2011
Jul 2011
Aug 2007

4504 S Holladay Blvd
1804 4500 S
Millcreek, Utah
Google Street View
Sep 2022
See latest date
Share
4500 S
4500 S

sons Shop
Sicilia Mia
266

Sep 2022

Apr 2021

Jul 2018

Jun 2017

Apr 2016

Aug 2015

Aug 2014

Aug 2011

Jul 2011

Aug 2007

5. Establish, enhance, and maintain appropriate land use, architectural and/or landscape buffers to protect neighborhoods from encroachment where uses transition or have incompatible characteristics.

6. Encourage new developments and redevelopment projects to provide significant neighborhood/community amenities where appropriate, such as local and regional trail connections, public plazas or gathering spaces, pedestrian access to public or commercial activity centers, or development of public open space.

7. Allow and encourage mixed-use development at the Holladay Hills site, Holladay Village, Holladay Crossroads area, in addition to other key areas of the City that are transitioning from solely commercial to mixed-use.

8. Encourage appropriate architecture to maintain aesthetic character of the City and to increase energy conservation and air quality. Expand the role of the Design Review Board to ensure that future design and development of multi-family and commercial developments meet the goals of this General Plan.

9. Consider the application of an overlay zone along Big Cottonwood Creek to preserve the environmental integrity and character of the area. Improvements should include educational efforts that encourage affected residents to voluntarily apply the tools and concepts contained in the *Salt Lake County Big Cottonwood Creek Guide*.

10. Review and strengthen where necessary the current regulations concerning the environmental integrity and character of those areas along Spring Creek, and the Salt Lake/Jordan canal systems, Upper Canal and other like waterways through the City.

11. Require the planting and ongoing maintenance of street trees, landscaped parking areas, road verges and parking strips.

12. Create new mixed-use zones that allow higher-density residential uses in established commercial and office zones particularly where access to parks, open space and public uses is desirable.

13. Develop new standards for walls, fences, landscaping, trees bushes and other perimeter features, along the City's major arterials and collectors ensuring that the desire to dampen noise and enhance privacy on the private property side of these features is balanced with the need to maintain views and vistas and fit in with the historically open, green, and verdant street edges.

14. Promote and strengthen the Tree Canopy Sustainability Ordinance throughout the City through education and publicity efforts by the Holladay Tree Committee and the City of Holladay.

CHAPTER 3: TRANSPORTATION NETWORK

*Amended November 2019

INTRODUCTION

Like many Wasatch Front cities with development patterns driven by the needs and possibilities of the automobile, Holladay is and will continue to be primarily dependent on driving. But recently the City has made significant steps toward providing other alternatives. The City's development of Holladay Village creates an attractive center of pedestrian activity within walking distance for many residents. The City has been active in developing bicycle routes throughout Holladay and is pursuing further improvements. The City of Holladay General Plan 2015 – 2030 develops a road map and provides tools to further improve transportation alternatives, while ensuring that vehicle access and mobility in Holladay function well. It ensures that streets are easy to navigate and uncongested while improving the City's public realm.

As required by Utah State Code this transportation and traffic circulation chapter includes the general location and extent of existing and proposed streets, mass transit, and other modes of transportation correlated with the population, housing and employment projections and the proposed land use and housing chapters of the general plan. Transportation investment and infrastructure improvement and decisions should be consistent with the Regional Transportation Plan (RTP) as developed and adopted by the Wasatch Front Regional Council, the Metropolitan Planning Organization (MPO) for the Salt Lake valley.

In particular, this chapter addresses both the ways in which Holladay residents, employees, and visitors get around the City – the transportation network – as well as the physical space in which they move – the streets and corridors. This chapter considers the safety, mobility, and access of all major transportation modes – vehicles, transit, bicycles, and walking. It also considers a wide variety of uses for Holladay streets, including for all transportation modes and as public space.

TRANSPORTATION NETWORK

The Transportation Network consists of four main elements; vehicles, transit, bicycles, and pedestrians. Each has specific demands and design considerations. Basic transportation planning considers conflicts that are likely to occur between different types of users and works toward creating a system that is safe and easy to use by all. Above all, future decisions regarding improvements to the existing transportation network should ensure the safety and interconnectivity linkages to as many areas both inside and outside of the community as possible for its users regardless of the mode they choose when accessing Holladay's streets and trails. Also, these decisions must maintain and enhance, wherever possible, the mobility and regional access for all the network's users.

Following is a detailed look at the four elements of the City's Transportation Network. Along with each element is a list of specific goals for that element and some suggested implementation measures. Additional street cross-sections and preferred objectives for those elements are found in the Updated General Plan Study document, Appendix A of this General Plan.

VEHICLE NETWORK

As Holladay is primarily a residential community, the major element of the City's Transportation Network is based on the Vehicle Network, which consists of the whole street system. For the purposes of this General Plan, the existing roadways are grouped in the following Functional Classes:

- *Freeway* – A divided major highway with full control of access and no at-grade crossings. These are state-owned regional routes for longer trips and need to ensure capacity of a high number of vehicles at high speeds.
- *Expressway* - A divided major highway with full control of access and at-grade crossings. These are regional routes, not owned by the City, with higher traffic volumes and higher vehicle speeds.
- *Major Arterial* – These routes serve as the principal network for through-traffic or traffic traveling across town.
- *Minor Arterial* –Similar to a Major Arterial but have lower traffic volumes and operate at lower speeds.
- *Collector* –This type of route is intended to collect traffic from local and residential collectors and distribute them to Arterial routes.
- *Primary Residential* – These routes collect traffic from residential local routes and distribute them to Collector, and Arterial routes. These routes are intended for low volume, inter-neighborhood trips, and lower speed limits.
- *Secondary Residential* – Routes used primarily to provide direct access to residential, commercial, and other abutting properties. These routes are intended for low-volume, short trips, and lower speed limits.
- *Private driveways, lanes and roads.* Non-publicly owned and maintained facilities used to provide access to and from the overall transportation network of the city.

In addition some of Holladay's streets have state highway and truck route designations. Holladay's vehicle network also includes parking, though this need in Holladay is largely provided on private property. Map 3.1 shows the General Plan Vehicle Network/Roadway Classifications.

The primary goals for the City's Vehicle Network are to:

1. Ensure the safety of all users;
2. Continue to build upon and maintain the existing infrastructure;
3. Mitigate and absorb traffic impact of new development; and
4. Reduce impediments to convenient use of main traffic corridors and discourage cut-through use of local residential streets.

The following implementation measures are suggested as a means of reaching those goals;

1. Establish and enforce speed limits based on the street type and traffic engineering analysis.
2. Develop school routing plans that minimize vehicle-pedestrian conflicts.
3. Wherever possible implement appropriate traffic calming measures.
4. Work with City businesses and institutions to explore non-traditional ways of reducing traffic volumes, such as carpooling, biking, etc.
5. Work to balance traffic evenly over the network of arterial and collector streets and seek ways to achieve optimal connectivity across the network.
6. Review and update where necessary the City's adopted "Standard Details for Public Works Construction".

7. Require all private street construction conform to the City's adopted standards.
8. Require proposed developments to perform a Traffic Impact Study (TIS) when the proposed development will generate more than 100 trips per hour during peak hours.
9. Require proposed developments to protect, preserve, and donate needed street width on existing or future roadways.
10. Improve key intersections.
11. Continue to firmly advocate for full northbound ramps on I-215 at 4500 South as a major priority for Holladay's vehicular network.
12. Advocate for I-215/6200 South interchange modifications to adequately serve future Gravel Pit development in Cottonwood Heights.
13. Integrate urban design principles with the City's street specifications and targeted cross-sections to create streetscapes that integrate:
    - accessibility of Citywide destinations for all modes of travel;
    - pedestrian scale; and
    - key scenic vistas

MAJOR STREET CORRIDORS

Specific major street corridors in the city have significant impact on the way citizens and visitors move through Holladay, in their automobiles, as pedestrians or as other users. Mobility or lack thereof directly affects the land uses along each street.

For the purposes of this General Plan, the following major street corridors or sections of those street corridors have specific, identified objectives. These should be carefully considered when designing, developing or redeveloping along these important streets especially as it relates to existing and future, housing, education, employment, recreation and commerce.

HIGHLAND DRIVE

Network Designations:

- Major Arterial
- Truck Route
- Priority High-Capacity Transit Corridor
- Priority UTA bus route
- Local Bike Corridor
- Community Pedestrian Priority Corridor

Target right-of-way:

- 80 feet

Objectives:

- Build on recommendations of the Highland Drive Master Plan.
- Make walking safe for connection between neighborhoods, centers, and schools.
- Ensure that Highland Drive near the Holladay Hills (Mall) redevelopment site can handle projected traffic created by new development.
- Designate Highland Drive as the City's preferred north-south BRT route.

Map 3.1: Vehicle Network/Roadway Classification Map

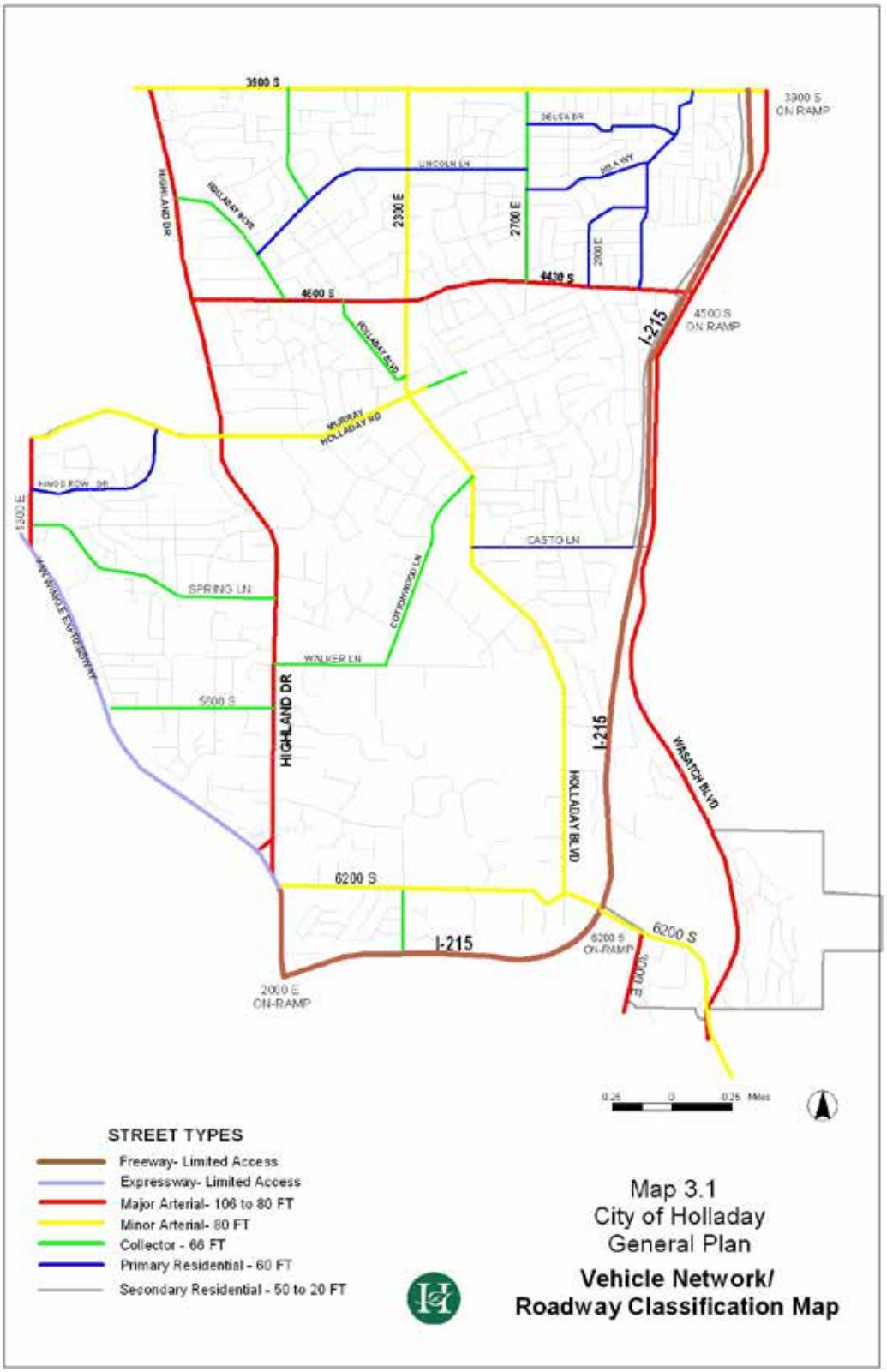

AMENDMENT

Permit for Fencing Attachment Referenced in Staff Report Packet

See the following two pages, pages 53-53

INSPECTION REQUESTS: www.cityofholladay.com/government/building/

CITY OF HOLLADAY
Community Development
Building Permit

4580 South 2300 East, Holladay, UT 84117
Phone: 801-527-3890

25000141

See the back side for building permit tracking instructions.

Property Address:

Project Title/Project Description: [Project Title/Desc./WO#]

Property Owner(s): Property Owner Phone #:

Applicant Name & Address: Casey Buxton, See Permit Applicant Phone #: 801-865-8180

Onsite Contact: Casey Buxton Onsite Phone #: 801-865-8180

Project Email Address: cbux@comcast.net

Check One: ☑ **LICENSED CONTRACTOR DECLARATION** ☐ **OWNER-BUILDER DECLARATION** (Sign Declaration)

I hereby certify that I have read and examined this permit and that the information provided by me is true and correct. All provisions of laws and ordinances governing this type of work will be complied with whether specified herein or not. The granting of a permit does not presume to give authority to violate or cancel the provisions of any other state or local law regulating construction or the performance of construction.

Applicant Signature: **Date:**

INSPECTIONS REQUIRED: This permit shall become null and void if work is not commenced within **180 days**, or if works is suspended or abandoned for a period of 180 days or more at any time after the work has commenced. Commencement or continuation of work shall be verified only by inspection reports from Holladay City inspectors. All required inspections shall be requested at least one working day before they are to be made. Inspections are required before any work is covered. Please call if you need further information about when an inspection is required.

Contractors:	Contractor #:	State License #:	Phone #:
C Buxton Exteriors	1431935		

Parcel#:		Zone:	
Subdivision:		FEMA Floodplain:	1%: AE
Lot:		Liquefaction:	H
C.U.P #:		Fault Line Sturdy Zone:	No

Zoning/Land Use Requirements: 2' max in clearview at corner and driveway, 5' on corner side from front of structure along 4500 S.	***Building Requirements:*** none
Approval Signature: **Date:** 02/05/2025	**Approval Signature:** **Date:**
Public Works Requirements:	***Fire Requirements:***
Approval Signature: **Date:**	**Approval Signature:** **Date:**
Engineering Requirements:	
Approval Signature: **Date:**	

*** This permit becomes valid upon required approvals and acceptance of required fees.***

PERMIT TO BE DISPLAYED ONSITE

5' only at front of house outside of clearview area.

2' within clearview

4' in front yard

15 feet from driveway =

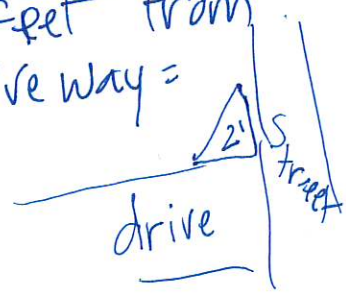

INSPECTION REQUESTS ONLINE: www.cityofholladay.com/government/building/

CITY OF HOLLADAY

Community & Economic Development Department
4580 South 2300 East, Holladay, UT 84117
Phone: 801-527-3890

FENCING PERMIT

PERMIT #

Fencing permit is required to construct or reconstruct a fence in the front yard, side yards along streets, and/or in rear or side yards when the fence is proposed at higher than 6 feet (max 8' with abutting neighbors' written agreement).

Property Address: 4504 S. Holladay

Property Owner(s): Carter McDonald **Owner Phone #:** 801-865-8180

Applicant Name & Address: Casey Buxton 4806 S. Wasatch **Applicant Phone #:** " "

Project Email Address: *(Inspection results will be sent to this email)* cbuxton@mcastinet

I hereby certify that I have read and examined this permit and that the information provided by me is true and correct. All provisions of laws and ordinances governing this type of work will be complied with whether specified herein or not. The granting of a permit does not presume to give authority to violate or cancel the provisions of any other state or local law regulating construction or the performance of construction. Applicant must comply with all laws an d ordinances governing the type of work, whether specified herein or not. The granting of a permit does not authorize the violation of any law nor will a permit cancel the effect of the provisions of any other law regulating construction or the performance of construction. Any permit or license issued for signs which are in conflict with Sat Lake City ordinances shall be null and void, whether or not the license or permit was issued by employees of the city authorized to issue such permit or license. It is the responsibility of the applicant to verify all dimensions and to verify all information contained in this application.

Applicant Signature: _____ *Date:* 2/5/25

*Provide a diagram of the property indicating the proposed fence location and height. Include the location of abutting driveways, existing utilities (hydrants, utility poles) AND fence type and design. ***Fencing proposed on top of retaining wall are further limited in height – see attached for addition height regulations*

PROPERTY SITE PLAN

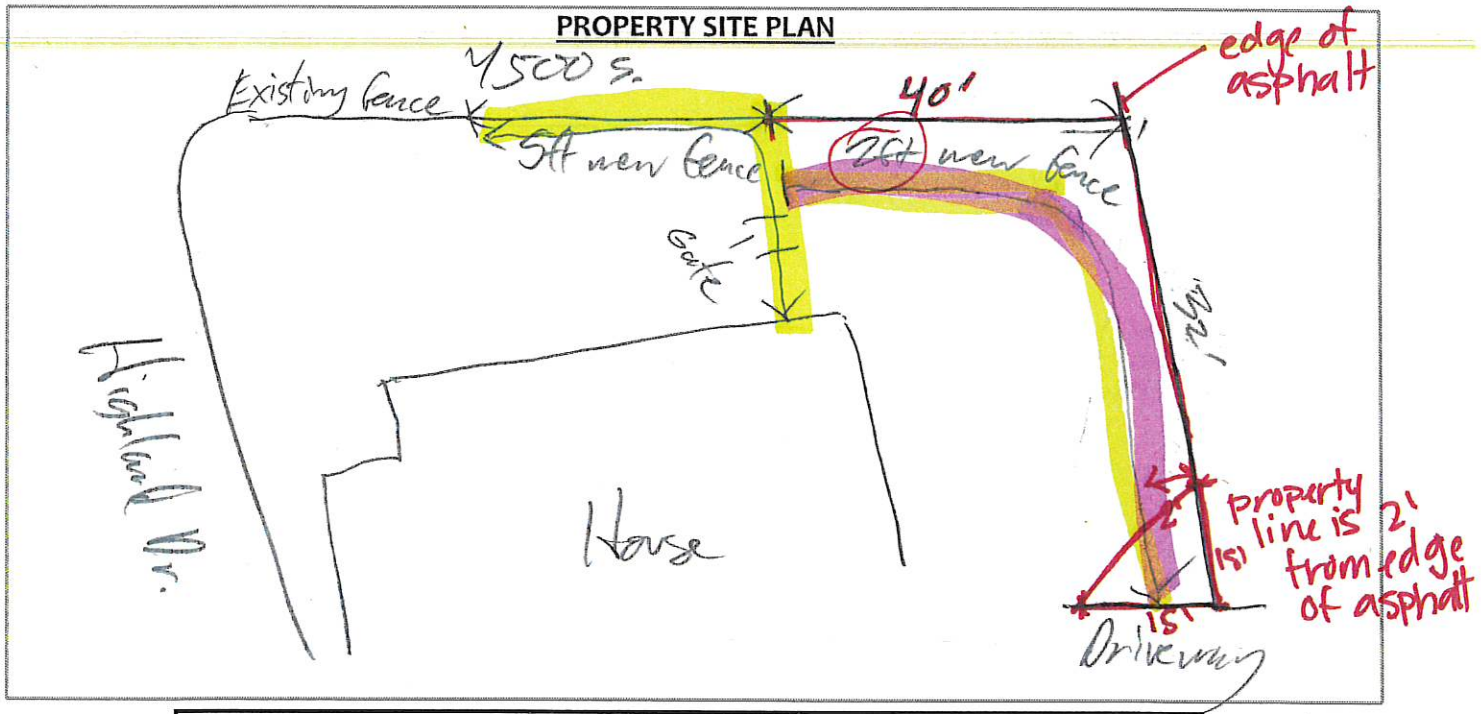

Contractors:		State License #:	Phone #:
Fencing Contractor: CBuxton Exteriors		954706-5501	801-865-8180
Engineer:			
Parcel#:		Zone:	

Zoning/Land Use Requirements:	Public Works/Engineering Requirements:
Approval Signature: Date:	Approval Signature: Date:

2ft
5ft

City of Holladay
COMMUNITY ECONOMIC DEVELOPMENT DEPARTMENT 4580 S 2300 E,
Holladay, Utah 84117
Phone: 801-527-3890

APPLICATION & REQUIRED SUBMITTALS

VARIANCE REQUEST:

Utah State law grants the Appeals Officer their authority. Very specific guidelines are established by State law which restricts an Officers' power and authority. References of applicable regulations from the City of Holladay Ordinance.

NOTE: If you do not understand any portion of this process, please seek your own legal counsel.
CITY EMPLOYEES CANNOT PROVIDE LEGAL ADVICE OR PROVIDE INPUT ON YOUR CHANCES OF

SUCCESS. The following provides the framework under which the Officer must consider a variance request:

I. Literal enforcement of the zoning ordinance would cause an unreasonable hardship for the applicant that is not necessary to carry out the general purpose of the zoning ordinance;
II. There are special circumstances attached to the property that do not generally apply to other properties in the same district; III. Granting the variance is essential to the enjoyment of a substantial property right possessed by other property in the same district; IV. The variance will not substantially affect the general plan and will not be contrary to the public interest; and
V. The spirit of the zoning ordinance is observed and substantial justice done.

Following Documents are Required for a Complete Submittal:

1. The following information shall be submitted to the Community Development Department:

- ☐ *Completed **General Appeal Application*** Form
- ☐ *Pay Applicable fee as per 03.35 (nonrefundable)*
- ☐ *Property Owner Affidavit*
- ☐ *Site plan showing; lot dimension, size & location of all structures and distances to property lines.*
- ☐ *Building elevations, floor plans and any other structural dimensions pertinent to the application (if applicable).*
- ☐ *Narrative outlining, as detailed as possible all relevant information that will support your position;*
  - *a. What type of Variance are you seeking?*
  - *b. Quote the section of the Code where the requirement you want varied is found.*
  - *c. State why you desire to obtain and/or the purpose of the variance described above.*
  - *d. Describe the following points: **If you desire assistance, please seek your own legal counsel***
    - *1. Describe the hardship you will incur if the variance is not granted. (Economic hardship is not a lawful reason under state law)*
    - *2. Describe how this property is different from other properties within the vicinity.*
    - *3 Describe what benefit other properties in the vicinity, with the same zoning, enjoy that this property will not without a variance.*
    - *4. Describe why a variance will not deviate from the general purposes of the City of Holladay development code*
    - *5. Describe how a variance conforms to the overall intent of the zoning laws and why it is fair that the variance be granted. e.*
  - *A brief statement of any previous variance requests on the subject property, the nature of the variance (either granted or denied) f.*
  - *State any other details about this appeal of which you want to make the officer aware.*

2. The application should be filed no later than **4 weeks prior** to the desired meeting date before the Appeal Hearing Officer.

Application Procedure and Process as per 13.09.020

1. After the application is determined to be complete, the community development director shall forward the application to the TRC for its review and recommendation.
2. Upon receipt of a recommendation from the technical review committee, the community development director shall forward the application to the administrative appeals officer.
3. You will be notified as to the scheduled hearing date
4. Notice of the public hearing shall be posted on the property (no not remove this notice)
5. The city shall send notice of the date, time at least ten (10) calendar days prior to the meeting to the record owner of: a. Land directly affected by the proposed variance request; and
   b. All lots within five hundred feet (500') of the subject property.
6. After due consideration the administrative appeals officer shall approve, approve with mitigation measures, or deny the application. Standards for approval are set forth 13.09.020E
7. A copy of an affidavit of each variance granted shall be recorded with the Salt Lake County recorder

NOTE: It is required that each case up for hearing be presented and argued before the Appeal Hearing Officer either by the petitioner or an authorized agent. If no one appears to argue your application, the Hearing Officer may still hear the case and act in your absence.

If for some reason you are unable to attend the meeting due to a personal emergency, you must call the Community Development Department. If no arrangements are made, the Hearing Officer will hear and decide your case with or without your presence.

Appealing an Hearing Officer's Decision

Any appeal of the decision of the Board of Adjustment must be made **within thirty [30] days** to the appropriate District Court of the State of Utah. The proper forms and procedure for filing such an appeal may be obtained from the District Court or the attorney of your choice. The City of Holladay DOES NOT have this information and cannot assist you in any way with the filing this appeal. Copies of the case file, including all evidence submitted will be made available to interested parties.

City of Holladay

COMMUNITY ECONOMIC DEVELOPMENT DEPARTMENT
4580 S 2300 E, Holladay, Utah 84117
Phone: 801-527-3890

RECEIVED
FEB - 7 2025

GENERAL APPEAL APPLICATION

Name of Project: **Variance Request for Fence Height**

Address of Project: **4504 S Holladay Circle, Holladay, UT 84117**

TYPE OF APPEAL

APPEAL AUTHORITY: ADMINISTRATIVE APPEALS OFFICER (ORD. 13.09) APPEAL AUTHORITY: CITY COUNCIL (ORD. 13.07) VARIANCE – WAIVER/MODIFICATION to ZONE ORDINANCE PLANNING COMMISSION ACTION – 10 days from date decision

ADMINISTRATIVE DECISION – 10 days from date decision

Appellant Name: (Please Print) ***ATTACH PROPERTY OWNER AFFIDAVIT***	Appellant's Agent: (Please Print)
Carter Shirra and Amanda Kruse	**Casey Buxton**

Appellant's Mailing: **4504 S Holladay Circle**
Address: City: **Holladay** State: **UT** Zip: **84117**

Appellant's Phone: **(801) 573 - 8161**

Appellant's Email Address: **Cartershirra122@gmail.com**

Main Contact Person (Please Print): **Carter Shirra**
Name: **Carter Shirra** Phone: **8015738161** email: **Cartershirra122@gmail.com**

Brief description of decision being appealed: *(attach written, detailed ground for the appeal to this application)*

I am requesting a variance to rebuild a 6-foot fence in our front yard, which borders 4500 S, Highland Drive, and Holladay Circle. The existing fence was damaged by city snow plows, and the replacement is necessary for the security and privacy of our home. Our front yard is the only yard we have, and as such, it serves as a vital space for our family. Under the current zoning code, fences in front yard areas are limited to 2 feet in height, and in the corner-side yard area, the code allows for a maximum of 5 feet.

We are requesting the variance for the following reasons:

- ***Security: Our property is located on a corner lot, making it more visible and potentially more vulnerable to traffic and unauthorized access. The home is situated in close vicinity to these busy roads with only a small strip of yard and sidewalk as a barrier. A 6-foot fence will help provide the necessary security needed for our family.***
- ***Privacy: The taller fence will improve privacy for our home and yard, shielding our property from the busy streets of 4500 S and Highland Drive.***
- ***Protection from Snowplows and Traffic:City Snowplows frequently damaged the previous fence by pushing snow onto our property. A 6-foot fence will offer better protection from further damage, as well as safeguard our property from vehicles that may veer off the road, as happened last year.***
- ***Dog Safety and Enjoyment: We have a dog, and the new fence will ensure a safe, enclosed area for them and our family to enjoy outside without worry of them running into the streets or being disturbed by traffic or pedestrians.***

Neighborhood Context: The neighborhood is tucked away and features homes with varying fence heights. While no fences taller than 6 feet are currently in the immediate vicinity, several fences do exceed the 2-foot height limit we are being required to comply with. The taller fence will align with the existing aesthetic and will not disrupt the visual harmony of the

area.

FILING FEES: (ORD 3.35)

VARIANCE - RESIDENTIAL $500.00 APPEAL TO CITY COUNCIL $150.00 VARIANCE - COMMERCIAL $750.00
APPEAL of ADMINISTRATIVE DECISION $500.00

OFFICE USE ONLY

FILE NUMBER _____ *PARCEL NUMBER*

GENERAL PLAN:

FINAL TOTAL DUE:

ZONE: FILE DATE: _____

PC ACTION: DATE: CC ACTION: DATE:

NEXT STEPS:

1. To be considered COMPLETE, this form must be accompanied by required appeal checklist and submittals or it will not be accepted. 2. The Community Development Director will schedule a public meeting within 3 weeks of application and will notify you and other affected parties 3 The Appeal Officer will receive this application as well as any back up materials at least 1 week prior to the meeting date.
3. Attendance at the scheduled hearing is required by the applicant or a representative of the applicant.

CITY OF HOLLADAY
AFFIDAVIT OF PROPERTY OWNERSHIP
FOR PROPERTY LOCATED AT

ADDRESS:

SUBDIVISION PLAT LOT

PROPERTY OWNER

I (WE), BEING DULY SWORN, DEPOSE AND SAY THAT I (WE) AM (ARE) THE OWNER(S) OF THE PROPERTY IDENTIFIED IN THE ATTACHED APPLICATION AND THAT THE STATEMENT HEREIN CONTAINED AND THE INFORMATION PROVIDED IN THE ATTACHED PLANS AND OTHER EXHIBITS ARE IN ALL RESPECTS TRUE AND CORRECT TO THE BEST OF MY (OUR) KNOWLEDGE.

PROPERTY OWNER

PROPERTY OWNER

ACKNOWLEDGMENT

STATE OF UTAH)

) SS.

COUNTY OF)

THE FOREGOING AFFIDAVIT WAS ACKNOWLEDGED BEFORE ME THIS DAY OF _ WHO DULY ACKNOWLEDGED TO ME THAT HE DID EXECUTE THE SAME.

MY COMMISSION EXPIRES:

NOTARY PUBLIC

PROPERTY OWNER'S
AGENT AUTHORIZATION

I (WE), _ THE OWNER(S) OF THE REAL PROPERTY DESCRIBED ABOVE, DO AUTHORIZE AS MY AGENT(S) _____ *TO*

REPRESENT ME (US) REGARDING THE ATTACHED APPLICATION AND TO APPEAR ON MY (OUR) BEHALF BEFORE ANY ADMINISTRATIVE OR LEGISLATIVE BODY IN THE CITY OF HOLLADAY CONSIDERING THIS APPLICATION AND TO ACT IN ALL RESPECTS AS OUR AGENT IN MATTERS PERTAINING TO THE ATTACHED APPLICATION.

ACKNOWLEDGMENT

STATE OF UTAH)

) SS.

COUNTY OF)

THE FOREGOING AFFIDAVIT WAS ACKNOWLEDGED BEFORE ME THIS DAY OF __ WHO DULY ACKNOWLEDGED TO ME THAT HE DID EXECUTE THE SAME.

MY COMMISSION EXPIRES:

NOTARY PUBLIC

PROPERTY OWNER AFFIDAVIT
City of Holladay, Utah

I, **Carter Shirra**, being duly sworn, depose and state as follows:

1. **Property Ownership:**
   I am the legal owner of the property located at **4504 S Holladay Circle**, Salt Lake City, Utah.
2. **Variance Request Authorization:**
   I am requesting a variance to rebuild a 6-foot fence on my property, which is located near the intersection of 4500 S, Highland Drive, and Holladay Circle.
3. **Statement of Hardship:**
   I affirm that the variance is necessary due to unique property conditions, including the property's close proximity to two major roads, lack of a traditional backyard, and prior damage caused by snowplows and car accidents.
4. **Accuracy of Information:**
   I certify that all statements, documents, and representations made in connection with this variance request are true and accurate to the best of my knowledge.
5. **Compliance with Regulations:**
   I understand that this variance request will be reviewed in accordance with the City of Holladay ordinances and that approval is not guaranteed.

Owner Information:

- **Owner Name:** Carter Shirra
- **Property Address:** 4504 S Holladay Circle, SLC, UT 84117
- **Phone Number:** 801-573-8161
- **Email:** cartershirra122@gmail.com

Signature:

Carter Shirra
Date: 2/7/25 Carter Shirra

NOTARY ACKNOWLEDGMENT

State of Utah)
County of Salt Lake)

On this Feb day of 7, **2025**, before me, Josh Eldredge **[~~Notary Public's Name~~]**, a Notary Public in and for said County and State, personally appeared **Carter Shirra**, known to me to be the person whose name is subscribed to the foregoing instrument, and acknowledged that they executed the same for the purposes therein contained.

Witness my hand and official seal.

Notary Public Signature: _____
Notary Seal:

JOSH ELDREDGE
Notary Public State of Utah
My Commission Expires on:
April 02, 2028
Comm. Number: 736432

Variance Narrative for Fence Height at 4504 S Holladay Circle

---

a. What type of Variance are you seeking?

*I am requesting a **variance for the height of a fence** in the front yard and corner-side yard areas of my property located at 4504 S Holladay Circle. The variance would allow the installation of a 6-foot fence, which exceeds the current maximum height limitation of 2 feet for front yard fences and 5 feet for corner-side yard fences as outlined in the Holladay City zoning code.*

---

b. Quote the section of the Code where the requirement you want varied is found.

The relevant sections of the Holladay City Code that govern the maximum height for fences in the front and corner-side yard areas are as follows:

- ***Clearview Standards**: "Any fencing within the clear view triangle must be 2 ft." (Section: 13.76.710).*
- ***Fences in the Corner-Side Yard Area Abutting the Street**: "The maximum height of a fence in the corner-side yard area as shown section shall be 5 feet" (Section: 13.76.710).*

---

c. State why you desire to obtain and/or the purpose of the variance described above.

The purpose of this variance request is to restore and improve the previous fence, which was 6 feet in height. The fence was damaged by city snowplows, and the proposed 6-foot fence will provide the following benefits:

- ***Security**: The fence will help protect my property from unauthorized access and enhance privacy from the busy streets of 4500 S and Highland Drive.*
- ***Privacy**: A 6-foot fence will offer additional privacy for my family, which is especially important given our proximity to these heavily trafficked streets.*
- ***Protection from Snowplows and Traffic**: Given the prior damage caused by snowplows, a taller fence will better protect my property from future snowplow impacts and prevent further property damage.*
- ***Dog Safety and Enjoyment**: A taller fence will create a safer and more secure environment for my dog, ensuring they are contained and safe from the dangers of traffic.*

---

d. Describe the following points:

1. Describe the hardship you will incur if the variance is not granted. (Economic hardship is not a lawful reason under state law)

If this variance is not granted, I will face several practical hardships:

- ***Increased Exposure: The 2-foot height limit will not provide sufficient privacy or security, leaving our property more vulnerable to traffic, pedestrians, and potential break-ins. Our home's close proximity to 4500 S and Highland Drive means that our living room and kitchen windows directly face 4500 S. With cars frequently stopped at the intersection, we experience a constant lack of privacy, as drivers and passengers have a direct view into our home. A taller fence would help mitigate this issue by providing much-needed privacy for our family.***

- ***Inadequate Protection from Snowplows: A shorter fence will not effectively shield our property from snowplows, which have already caused significant damage to our existing fence by pushing snow onto our yard. Without a 6-foot barrier, we risk repeated damage and ongoing maintenance issues.***

- ***Reduced Safety for Our Dog and Family: A lower fence height would limit our ability to safely contain our dog within our only yard, increasing the risk of them running into the street or being disturbed by traffic and pedestrians. Additionally, as we plan to grow our family in this home, a 6-foot fence is essential for the safety of our future children, ensuring they have a secure outdoor space***

shielded from the dangers of the busy roads surrounding our property.

- ***Increased Noise Disturbance: Due to our property's close proximity to 4500 S and Highland Drive, we experience significant traffic noise throughout the day and night. A taller fence would help serve as a barrier to reduce some of this noise, making our yard a more livable and enjoyable space. Without the variance, the reduced fence height will allow more noise pollution, negatively impacting our family's ability to comfortably use our only outdoor space.***

2. Describe how this property is different from other properties within the vicinity.

This property is unique because it is located on a ***corner lot****, directly abutting two major streets (4500 S and Highland Drive). Corner lots are more exposed to traffic, noise, and visibility from the street, making privacy and security even more important. This makes our situation different from properties in the vicinity that may not be as exposed or located near busy intersections. Our house is also much closer to the road than other residential corner properties abuting busy roads. Unlike other homes in Holladay City, which have more space separating them from major roads, our home is uniquely positioned with minimal distance between our living space and two of the city's busiest streets.*

3. Describe what benefit other properties in the vicinity, with the same zoning, enjoy that this property will not without a variance.

Other properties in the vicinity, with the same zoning, enjoy the benefit of ***more privacy and security*** *through the ability to install fences at a height greater than the 2 feet allowed in the front yard. Our property, being on a corner lot, has more exposure to traffic and the public, so it would benefit from a taller fence that provides the same level of privacy and protection that other properties with similar zoning enjoy.*

4. Describe why a variance will not deviate from the general purposes of the City of Holladay development code.

Granting the variance will not deviate from the general purposes of the Holladay City development code. The ***intent of the zoning code*** *is to promote safety, aesthetic value, and a quality of life for residents. In this case, the variance would help ensure that the property remains safe, secure, and private, in line with the general goals of the code. Additionally, the aesthetic harmony of the neighborhood will be improved, as the proposed fence will match the height of existing fences in the area and align with the general character of the neighborhood.*

5. Describe how a variance conforms to the overall intent of the zoning laws and why it is fair that the variance be granted.

The zoning laws intend to balance safety, privacy, and aesthetics in residential areas. In this case, the variance will allow for the maintenance of privacy and safety while still adhering to the broader goals of the zoning code. The need for a taller fence is not based on economic hardship but on practical concerns related to the safety of my family and dog, as well as the protection of my property from snowplows and traffic. It is fair to grant this variance because it allows for a reasonable accommodation while still respecting the intent of the zoning laws.

---

e. A brief statement of any previous variance requests on the subject property, the nature of the variance (either granted or denied)

To my knowledge, there have been no previous variance requests for this property. This is the first variance request related to the height of the fence.

---

f. State any other details about this appeal of which you want to make the officer aware.

In addition to the reasons outlined above, I want to emphasize that this variance request is critical for the security, privacy, and well-being of my family. The corner location of the property, with exposure to two busy streets, makes a taller fence particularly important. The previous fence that was damaged had been in place for years, and we seek to replace it with a fence of similar height that will restore the property's security and privacy. We believe that this variance request is reasonable, aligns with the character of the neighborhood, and will have no negative impact, only improving the value of the surrounding area.

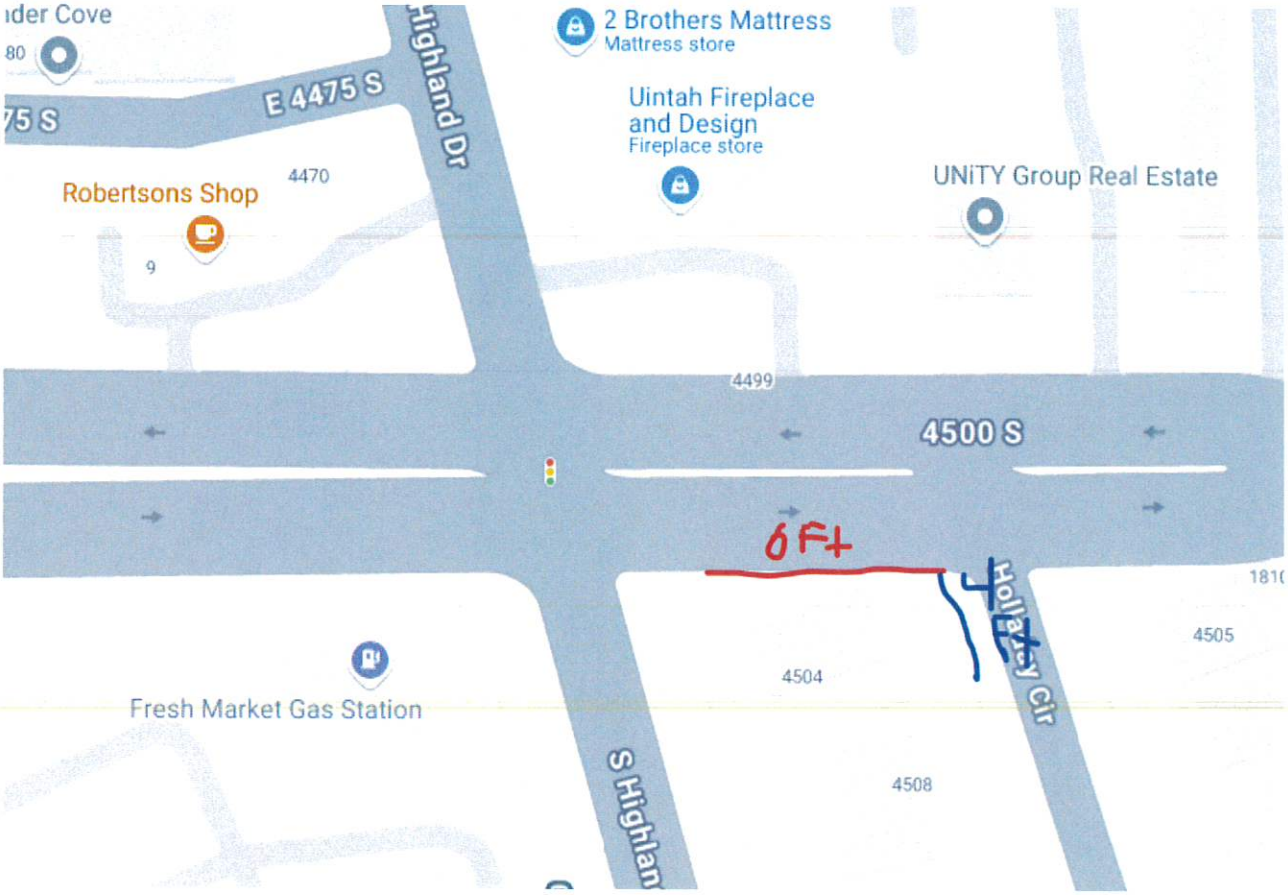
der Cove
80
75 S
E 4475 S
Highland Dr
2 Brothers Mattress
Mattress store
Uintah Fireplace
and Design
Fireplace store
UNiTY Group Real Estate
Robertsons Shop
4470
9
4499
4500 S
6 Ft
Holladay Cir
4505
4504
Fresh Market Gas Station
S Highlan
4508

Property Recs

Property Report For:

4504 S HOLLADAY CIR
Holladay, UT
84117

Prepared On:
February 7, 2025

Report Link

YOU MAY NOT USE OUR SERVICE OR THE INFORMATION IT PROVIDES TO MAKE DECISIONS ABOUT CONSUMER CREDIT, EMPLOYMENT, INSURANCE OR TENANT SCREENING. BECAUSE ERRORS CAN OCCUR WITH ANY DATA SOURCES, SOME RECORDS MAY NOT BE ACCURATE OR UP TO DATE.

4504 S Holladay Cir

Holladay UT 84117 (Salt Lake County)

ESTIMATED VALUE

$409,800 OFF MARKET

Last sold for $424,900 on Nov. 2022

Built in 1949 • Residential • 1249 sq. ft. Living Area • 3 Bed • 1 Bath

Satellite View & Map

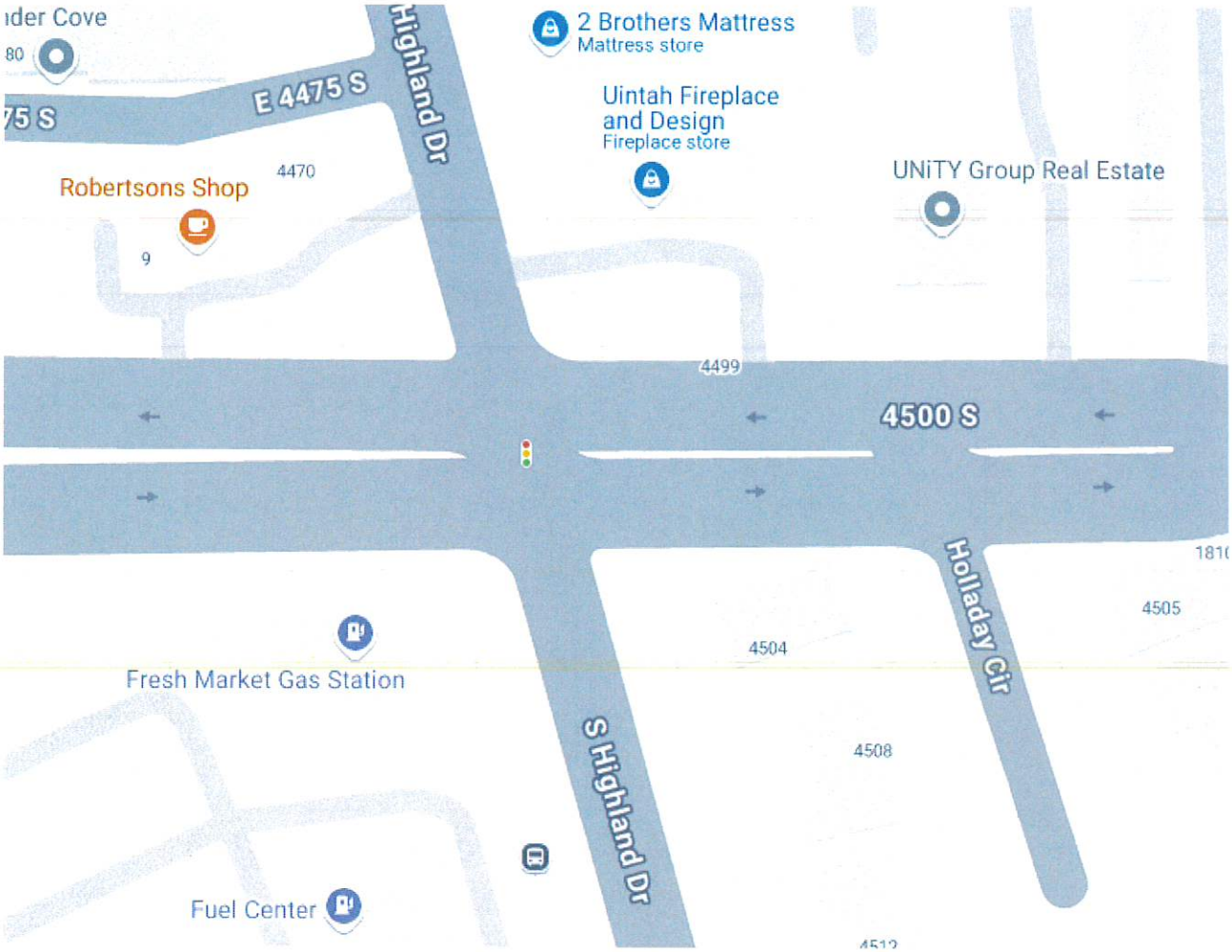

Owners & Residents

MOST RECENT OWNER OR RESIDENT

Kristi Olga Jackson
53 Years Old
DATES AT LOCATION: 12/01/2000 to 11/05/2024

Amanda L Kruse
26 Years Old
DATES AT LOCATION: 11/20/2023 to 07/04/2024

Carter James Shirra
DATES AT LOCATION: 11/20/2023 to 03/08/2024

Michael John Oconnell
31 Years Old
DATES AT LOCATION: 11/18/2022 to 11/20/2023

Katherine Elizabeth Brown
36 Years Old
DATES AT LOCATION: 12/18/2015 to 11/18/2022

Taylor Mackenzie Hiatt
37 Years Old
DATES AT LOCATION: 12/01/2015 to 11/18/2022

Darren Jon King
61 Years Old
DATES AT LOCATION: 04/01/1992 to 10/01/2012

Jodi Rae Thompson
54 Years Old
DATES AT LOCATION: 06/01/1999 to 02/07/2007

Raymond Edward Thompson
60 Years Old
DATES AT LOCATION: 08/01/1999 to 10/01/2002

Jennifer Cope Ayers
46 Years Old
DATES AT LOCATION: 07/13/2001

Catrin D Mead
57 Years Old
DATES AT LOCATION: 06/01/1993 to 02/06/1997

Lincoln Mead
59 Years Old
DATES AT LOCATION: 06/01/1993 to 02/06/1997

Creed Hunting Barker
65 Years Old
DATES AT LOCATION: 01/01/1996

Lora Jo Barker
46 Years Old (Deceased 2010)
DATES AT LOCATION: 04/01/1988

Ownership Timeline

2023 - Present

City Of Holladay

DATE OF PURCHASE
November 2023

2023 - 2023

Amanda Kruse Carter Shirra

DATE OF PURCHASE
November 2023

2022 - 2023

Mike O'connell

DATE OF PURCHASE
November 2022

N/A - 2022

Taylor Hiatt Katherine Hiatt

Property Details

This tidy brick bungalow has all the charm and warmth you've come to expect from this Holladay neighborhood. Bursting with possibility and natural light in equal measure, this spot would make a tip-top starter home... Inside, the traditional layout features several large windows, and each room has been well-designed and cared for over the years (bonus: the kitchen received an update in the form of new granite countertops). Outside, you'll find a perfectly sized yard, complete with a patio, RV parking, a newer roof, and plenty of covered parking. An included water share will make watering the landscaping and cherry tree a breeze. This neighborhood is central to Holladay and close to dining and shopping, making it a coveted one in these parts. We suggest you make your move. (The address may route incorrectly on google maps. Apple Maps routes correctly.) Square footage figures are provided as a courtesy estimate only. Buyer is advised to obtain an independent measurement.

Interior

OVERVIEW

BEDROOMS: 3

BATHROOMS: 1

INTERIOR FEATURES: Disposal, Kitchen: Updated, Range/Oven: Free Stdng.

BASEMENT

FEATURES: None

UTILITIES

UTILITIES: Natural Gas Connected,Electricity Connected,Sewer Connected,Water Connected

WATER SOURCE: Culinary, Irrigation, Shares

SEWER: Sewer: Connected

GAS: Natural Gas Connected

OTHER EQUIPMENT: Storage Shed(s), Window Coverings

LAUNDRY FEATURES: Electric Dryer Hookup

APPLIANCES: Ceiling Fan, Refrigerator

HEATING AND COOLING

COOLING: Central Air

HEATING FEATURES: Forced Air

ZONING INFORMATION

ZONING CODE: Single-Family

ZONING DESCRIPTION: RES

CURRENT USE: Single Family

Exterior

BUILDING INFORMATION

TOTAL STORIES: 1

YEAR BUILT: 1949

YEAR BUILT EFFECTIVE: 1997

ROOF: Asphalt

ARCHITECTURAL STYLE: Bungalow/Cottage

PATIO AND PORCH: Porch: Open

LOT INFORMATION

LOT SIZE: 6534 sq.ft.

LOT SIZE ACRES: 0.15 acres

LOT DIMENSIONS: 0.0x0.0x0.0

LOT FEATURE LIST: Cul-De-Sac, Fenced: Full, Road: Paved, Secluded, View: Mou ntain

FRONTAGE INFORMATION

LENGTH: 0.0

OVERVIEW

EXTERIOR FEATURES: Double Pane Windows,Lighting,Porch: Open

PROPERTY CONDITION: Blt./Standing

CONSTRUCTION MATERIALS: Brick

POOL AND VIEW

VIEW: Mountain(s)

Parking

GARAGE/CARPORT INFORMATION

CARPORT: Yes

CARPORT SPACES: 2

OPEN PARKING SPACES: 6

TOTAL PARKING: 8

PARKING FEATURES

FEATURES: Rv Parking

Other

SCHOOL INFORMATION

ELEMENTARY: Driggs

ELEMENTARY DISTRICT: Granite

MIDDLE: Olympus

MIDDLE DISTRICT: Granite

HIGH: Olympus

HIGH DISTRICT: Granite

MLS Details

Overview

MLS INFORMATION

RECORD #: 500622407993

LISTING #: 1836090

LISTING STATUS: Sold

LISTING DATE: Aug. 2022

LATEST LISTING PRICE: $424,900

SOURCE: Wasatch Front Regional MLS (UtahRealEstate.com)

SOLD DATE: Nov. 2022

SOLD PRICE: $424,900

DAYS ON MARKET: 92

ORIGINAL LISTING DATE: Aug. 2022

ORIGINAL LISTING PRICE: $499,900

MLS INFORMATION

PENDING DATE: Oct. 2022

LATEST PRICE CHANGE DATE: Oct. 2022

MLS SOLD DATE: Nov. 2022

MLS SOLD PRICE: $424,900

ASSESSOR LAST SALE DATE: Dec. 2015

MARKET VALUE DATE: Aug. 2022

MARKET VALUE: $509,800

AVG MARKET PRICE: $294 / sq.ft.

LISTING AGENT

NAME: Monica Dennis

MLS #: 89241

PHONE: 801-623-9422

LISTING AGENT OFFICE

NAME: Homeworks Property Lab, LLC

MLS #: 71606

PHONE: 801-810-8696

BUYER'S AGENT

NAME: Adrian Maco

MLS #: 96840

PHONE: 801-427-6004

BUYER'S AGENT OFFICE

NAME: Real Broker, LLC

MLS #: 71477

PHONE: 855-450-0442

LEASE AND CONCESSIONS

CONCESSIONS AMOUNT: $10,000

CONTINGENCY DATE: Oct. 2022

MLS Transaction History

DATE	EVENT	PRICE
11/17/2022	Off Market	$424,900
08/17/2022	Active Under Contract	$424,900
08/17/2022	Pending	$424,900
08/17/2022	For Sale	$499,900

Lot Information

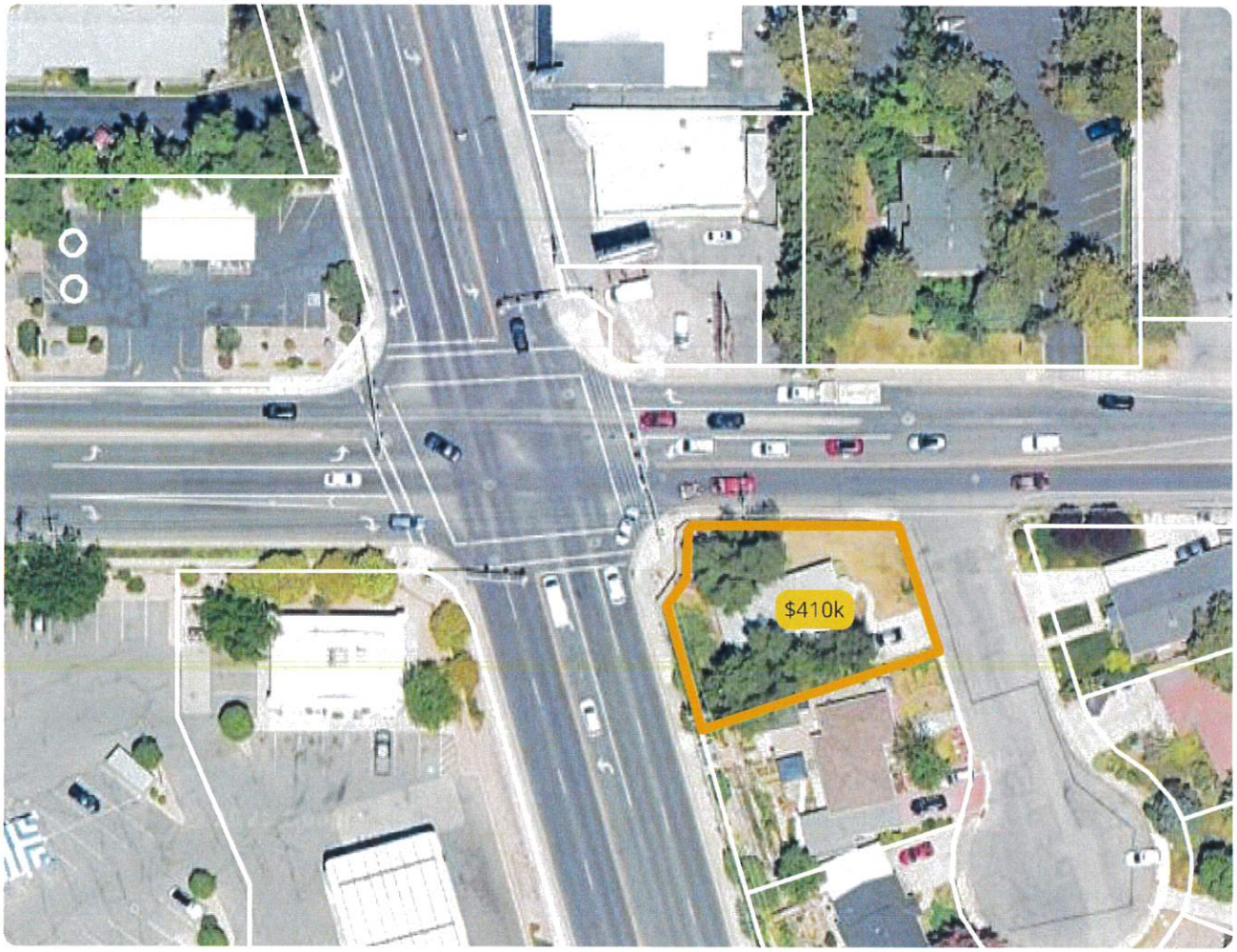

Overview

LAND USE CODE Single Family Residence	COUNTY LAND USE CODE 49035
COUNTY Salt Lake	TYPE OF DEED Warranty Deed
COORDINATES 40.674093, -111.841173	LAND SQFT 6,534 sq. ft.
LAND ACRES 0.15 acres	WATER Yes - Type Unknown