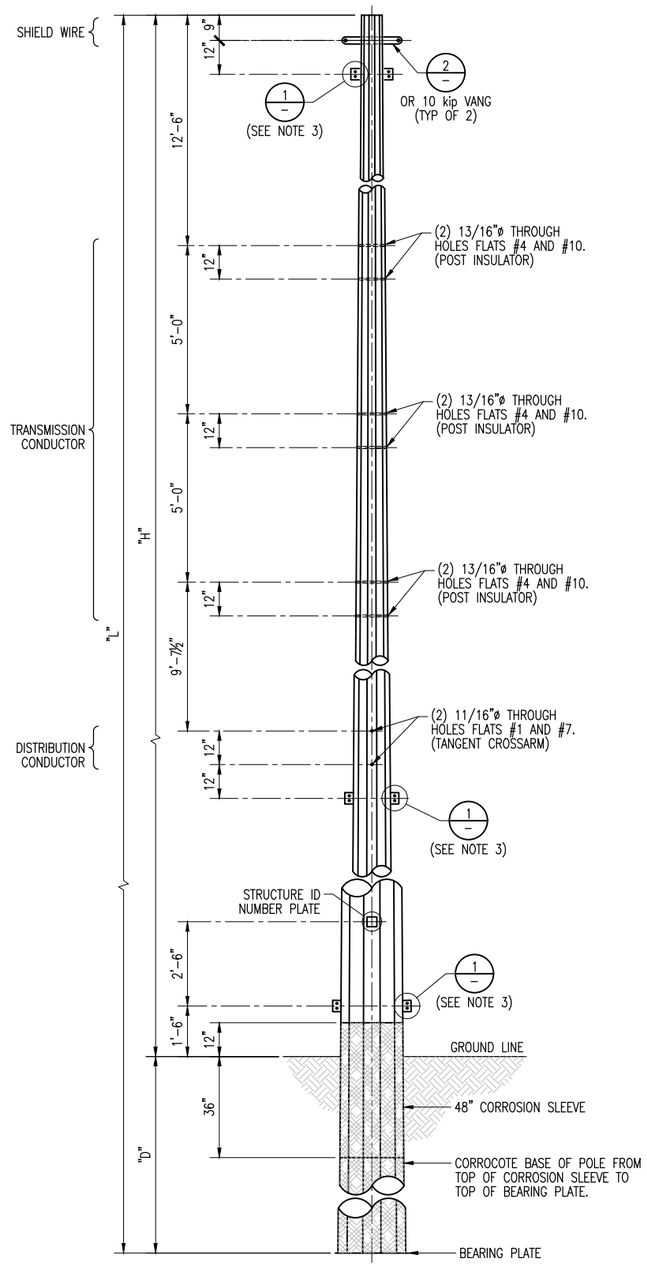

TANGENT STRUCTURE PRE-ENGINEERED POLE
SCALE: NTS

POLE DESIGN DATA (SEE NOTE 1)

DESCRIPTION / POLE CLASS	75' S-02.9 CLASS 1 (10 REQ'D)	75' S-03.5 (H1) (2 REQ'D)	75' S-04.9 (H3) (1 REQ'D)	80' S-10.0 (H9) (1 REQ'D)	80' S-11.0 (H10) (6 REQ'D)
POLE NUMBER	#13, #16, #17, #18 #23, #24, #25, #31 #32, #33	#19, #26	#30	#35	#20, #21, #22, #27 #28, #29
NUMBER OF SIDES	12	12	12	12	12
TOTAL LENGTH – "L"	75'	75'	75'	85'	80'
HEIGHT ABOVE GROUND LINE – "H"	65.5'	65.5'	65.5'	74.5'	65.5'
EMBEDMENT DEPTH – "D"	9.5'	9.5'	9.5'	10.5'	14.5'
TOP DIAMETER	8.69"	8.69"	8.69"	10.34"	11.5"
GROUND LINE DIAMETER	15.8"	16.86"	19.77"	26.80"	25.75"
BUTT DIAMETER	16.90"	18.12"	21.45"	29.21"	27.9"
POLE THICKNESS	0.1875"	0.1875"	0.1875"	0.25"	0.25"
POLE TAPER (in/ft)	0.116104	0.132332	0.176764	0.229407	0.226993
POLE WEIGHT (lbs)	2104	2213	2509	4931	4791
GROUND LINE MOMENT CAPACITY (ft-kips)	184	221	307	677	696

C

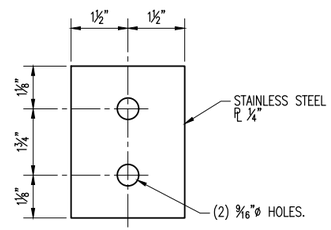

DETAIL 1
SCALE: 6"=1'-0"
GROUNDING PLATE

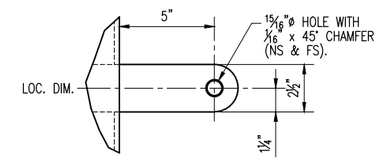

DETAIL 2
SCALE: 3"=1'-0"
SHIELD WIRE SUSPENSION ATTACHMENT

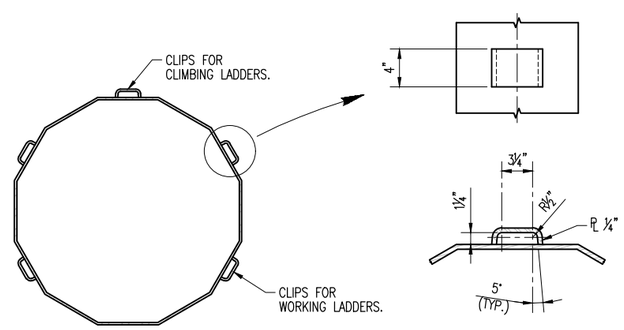

NOTES:
1. CLIPS TO BE SPACED AS REQUIRED FOR LADDERS SUPPLIED.
2. LADDER CLIP DETAIL IS FOR McGREGOR LADDERS ONLY.

DETAIL 3
SCALE: 1/2"=1'-0"
LADDER CLIP DETAIL
(SEE NOTE 2)

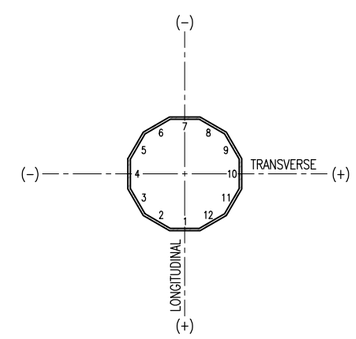

ORIENTATION OF AXES
SCALE: NTS

DESIGN APPLICATION

WIRE DATA

SHIELD WIRE: OPGW DNO-11127
TRANSMISSION CONDUCTOR: 795 ACSR "DRAKE"
DISTRIBUTION CONDUCTOR: 477 ACSR "PELICAN"

GOVERNING CONDITIONS

SHIELD WIRE:
NESC MEDIUM (1/4" ICE, 4 psf WIND @ 15° F), 1765 lbs. INITIAL TENSION

TRANSMISSION CONDUCTOR:
795 ACSR – NESC MEDIUM (1/4" ICE, 4 psf WIND @ 15° F), 6000 lbs. INITIAL TENSION

DISTRIBUTION CONDUCTOR:
NO ICE, NO WIND @ 15° F, 20% CONDUCTOR ULTIMATE TENSION, FINAL TENSION

MECHANICAL LOADING CRITERIA

CASE 1: NESC MEDIUM (RULE 250B):
4 psf WIND @ 15°F, 1/4" ICE ON WIRES, CONDUCTORS AND STRUCTURE.
OLF: VERTICAL 1.5, WIND 2.5, TENSION 1.65.

CASE 2: HIGH WIND – 90 MPH (RULE 250C):
21.4 psf WIND @ 60°F, NO ICE ON SHIELD WIRE AND TRANSMISSION CONDUCTORS,
21.2 psf WIND @ 60°F, NO ICE ON STRUCTURE.
OLF: 1.1 – ALL LOADS.

SPAN AND ANGLE DATA – 75' S-02.9 CLASS 1

DESCRIPTION	NESC MEDIUM	HIGH WIND
HORIZONTAL SPAN	275'	275'
VERTICAL SPAN SHIELD	255'	240'
VERTICAL SPAN TRANSMISSION	250'	240'
VERTICAL SPAN DISTRIBUTION	250'	230'
LINE ANGLE	0.6°	0.6°

SPAN AND ANGLE DATA – 75' S-03.5 (H1)

DESCRIPTION	NESC MEDIUM	HIGH WIND
HORIZONTAL SPAN	275'	275'
VERTICAL SPAN SHIELD	310'	335'
VERTICAL SPAN TRANSMISSION	325'	340'
VERTICAL SPAN DISTRIBUTION	325'	355'
LINE ANGLE	1.5°	1.5°

SPAN AND ANGLE DATA – 75' S-04.9 (H3)

DESCRIPTION	NESC MEDIUM	HIGH WIND
HORIZONTAL SPAN	280'	280'
VERTICAL SPAN SHIELD	235'	200'
VERTICAL SPAN TRANSMISSION	210'	195'
VERTICAL SPAN DISTRIBUTION	210'	175'
LINE ANGLE	1.2°	1.2°

SPAN AND ANGLE DATA – 80' S-05.7 (H4)

DESCRIPTION	NESC MEDIUM	HIGH WIND
HORIZONTAL SPAN	275'	275'
VERTICAL SPAN SHIELD	340'	395'
VERTICAL SPAN TRANSMISSION	485'	540'
VERTICAL SPAN DISTRIBUTION	590'	765'
LINE ANGLE	4.2°	4.2°

SPAN AND ANGLE DATA – 80' S-11.0 (H10)

DESCRIPTION	NESC MEDIUM	HIGH WIND
HORIZONTAL SPAN	275'	275'
VERTICAL SPAN SHIELD	260'	240'
VERTICAL SPAN TRANSMISSION	250'	240'
VERTICAL SPAN DISTRIBUTION	250'	235'
LINE ANGLE	7.7°	7.7°

GENERAL NOTES

1. VALUES OBTAINED FROM MEYER UTILITY STRUCTURES CATALOG.
2. ATTACH GROUNDING PLATES (DETAIL 1 ON THIS DRAWING) 1'-6" BELOW TOP OF POLE ON FLATS #1 AND #7, 1'-0" BELOW BOTTOM DISTRIBUTION CONDUCTOR HOLE ON FLATS #4 AND #10 AND 6" ABOVE CORROSION SLEEVE ON FLATS #4 AND #10.
3. CLIMBING LADDER CLIPS (DETAIL 3 ON THIS DRAWING) TO BE INSTALLED ON FLAT #1. WORKING LADDER CLIPS TO BE INSTALLED BELOW EACH SHIELD WIRE ATTACHMENT ON FLATS #4 AND #10, BELOW EACH SET OF TRANSMISSION CONDUCTOR HOLES ON FLATS #4 AND #10 AND BELOW DISTRIBUTION CONDUCTOR HOLES ON FLATS #4 AND #10.
4. FINISH SHALL BE SELF WEATHERING STEEL (ASTM A871).
5. CORROCOTE BASE OF POLE FROM TOP OF CORROSION SLEEVE TO TOP OF BEARING PLATE.

No.	DATE	BY	APP	REVISION	REFERENCE DRAWING	NUMBER
C	12/09/24	KAC	ML	REVISED STRUCTURE #35		
B	11/27/24	KAC	ML	90% REVIEW		
A	08/01/24	BDP	ML	60% REVIEW		

Washington City Feels Like Home

ICPE CONSULTING ENGINEERS

THE DRAWINGS, DESIGNS, IDEAS, ARRANGEMENTS AND PLANS INDICATED OR REPRESENTED ARE THE SOLE PROPERTY OF INTERMOUNTAIN CONSUMER PROFESSIONAL ENGINEERS, INC. (ICPE), AND ARE SUBJECT TO THE COPYRIGHT OF ICPE OR ITS ASSIGNS. THEY WERE CREATED, EVOLVED AND DEVELOPED EXCLUSIVELY FOR USE ON, AND IN CONJUNCTION WITH, THE SPECIFIED PROJECT. ANY USE OF THE DRAWINGS, DESIGNS, MATERIAL OR INFORMATION CONTAINED HEREIN, INCLUDING COPYING, WHICH IS NOT EXPRESSLY AUTHORIZED BY ICPE, IS STRICTLY PROHIBITED AS AN INFRINGEMENT OF ITS COPYRIGHT AND MAY RESULT IN LIABILITY.
© ICPE 2024

CONFIDENTIAL

Des By:	BDP	Date	03/07/24
Drawn By:	BDP	Date	03/07/24
Chk'd. By:	ML	Date	03/07/24
ENGR.	BDP	Date	03/07/24
APPD.	–	Date	–
APPD.	–	Date	–

NOT FOR CONSTRUCTION

WASHINGTON CITY
GRAPEVINE SUBSTATION – PARKWAY TAP
138KV TRANSMISSION LINE
PRE-ENGINEERED POLES – DESIGN DATA

SCALE: NTS
Project No. 071-079
DRAWING No. 071-079-S118
REVISION C