Docusign Envelope ID: 2F277711-A43E-4D2D-A721-2DCFCFCA18C5

Grantsville City
Record of Ordinance Adoption

A regular meeting of the City Council of Grantsville City was held at City Hall in Grantsville, Utah on Wednesday, the 4th Day of December, 2024 at the hour of 7:00 p.m., there being present and answering roll call the following:

Neil Critchlow	Mayor
HeidiHammond	Council Member
Scott Bevan	Council Member
Rhett Butler	Council Member
Jeff Williams	Council Member
Jolene Jenkins	Council Member

Also Present:

Braydee Baugh	City Recorder
Tysen Barker	City Attorney

Absent:

After the meeting had been duly called to order and the minutes of the preceding meeting approved, the ordinance 2024-36 was introduced in writing, read in full, and pursuant to a Motion made by Councilmember Butler. Seconded by Councilmember Bevan and was adopted by the following vote:

Yea:	Unanimous
Opposed:	None
Abstained:	None

The ordinance was then signed by the Mayor and recorded by the City Recorder in the official records of Grantsville City, Utah. The ordinance is attached:

DocuSigned by:
Braydee Baugh
9CB64F7D8237486...
Grantsville City Recorder

Docusign Envelope ID: 2F277711-A43E-4D2D-A721-2DCFCFCA18C5

GRANTSVILLE
INCORPORATED 1867

GRANTSVILLE CITY
ORDINANCE NO. 2024-36

AN ORDINANCE OF GRANTSVILLE CITY AMENDING CHAPTER 21.6.13 OF THE GRANTSVILLE CITY LAND USE AND MANAGEMENT CODE REGARDING STORM DRAINAGE AND FLOOD PLAINS.

Be it enacted and ordained by the City Council of Grantsville City, Utah as follows:

WHEREAS, the Grantsville City Council has determined the need to amend Chapter 21.6.13 of the Land Use and Management Code to enhance storm drainage and flood plain management requirements to better protect public health, safety, and welfare; and

WHEREAS, the proposed amendments aim to ensure that stormwater management practices align with best practices and current engineering standards for storm drainage design, detention, and retention; and

WHEREAS, a staff report, including new verbiage, recommendations, and updated storm drainage design requirements, has been prepared to support these amendments and is attached hereto as Exhibit A; and

WHEREAS, a public hearing was held on November 7, 2024, allowing interested parties to comment on the proposed changes;

NOW THEREFORE, BE IT ORDAINED BY THE CITY COUNCIL OF GRANTSVILLE CITY, STATE OF UTAH, AS FOLLOWS:

Section 1. Amendment to Chapter 21.6.13: Chapter 21.6.13 of the Grantsville City Land Use and Management Code is hereby amended as set forth in Exhibit A.

Section 2. Effective Date: This Ordinance shall take effect immediately upon its passage and approval as provided by law.

Section 3. Severability clause: If any part or provision of this Ordinance is held invalid or unenforceable, such invalidity or unenforceability shall not affect any other portion of this Ordinance and all provisions, clauses and words of this Ordinance shall be severable.

ADOPTED AND PASSED BY THE CITY COUNCIL OF GRANTSVILLE CITY, THIS 4th DAY OF DECEMBER, 2024.

BY THE ORDER OF THE GRANTSVILLE CITY COUNCIL:

Signed by:

31473306108F4DF...

By Mayor Neil Critchlow

ATTEST

DocuSigned by:

DCB64E7D323F1B6...

Braydee Baugh, City Recorder

Approved as to Form:

Signed by:

F6489758F096404...

Tysen J. Barker, Grantsville City Attorney

Docusign Envelope ID: 2F277711-A43E-4D2D-A721-2DCFCFCA18C5

Exhibit “A”

Staff Report, Updated Chapter 21.6.13 and Updated Storm Drainage Design Requirements

Docusign Envelope ID: 2F277711-A43E-4D2D-A721-2DCFCFCA18C5

Planning and Zoning
336 W. Main St.
Grantsville, UT 84029
Phone: (435) 884-1674

Staff Report Summary for
Chapter 21.6.13 Storm Drainage
and Flood Plains

Parcel ID(s):
Property Address:
Applicant Name:
Request:
Prepared By: Shelby Moore

Meeting Date: 11/7/2024
Public Hearing Date: 11/7/2024
Current Zone:
Acres:

Planning Staff Explanation and Recommendation: Discussion of Chapter 21.6.13 Storm Drainage and Flood Plains.

PLANNING STAFF ANALYSIS AND COMMENTS

1) The amendment to Chapter 21.6.13 Storm Drainage and Flood Plains to ensure that storm water drains completely from any storm drainage basins within 72 hours after being filled to any capacity.

*** Disclaimer: Please be advised that at no point should the comments and conclusions made by The City staff or the conclusions drawn from them be quoted, misconstrued, or interpreted as recommendations. These inputs are intended solely for the legislative body to interpret as deemed appropriate.*

The information provided is purely for the legislative body to interpret in their own right and context. It is crucial to maintain the integrity and context of the information shared, as it is meant to assist in the decision-making process without implying any endorsement or directive, but it is essential that it is understood within the appropriate scope.

Docusign Envelope ID: 2F277711-A43E-4D2D-A721-2DCFCFCA18C5

21.6.13 Storm Drainage And Flood Plains

(1) A storm drainage system for the entire development shall be designed by a professional engineer, licensed in the State of Utah and qualified to perform such work. Existing storm drainage features which are to be incorporated in the design shall be identified. If the subdivision has phases, a general storm drainage plan for the entire area shall be presented with the infrastructure design and engineering drawings with the preliminary plat for the first phase. Appropriate development stages for the storm drainage system for each phase shall be indicated.

(2) No lot one acre or less in area shall include flood lands. All lots of more than one acre shall contain not less than 40,000 square feet of land at an elevation at least two feet above the elevation of the 100 year recurrence interval flood or, where such data is not available, five feet above the elevation of the maximum flood of record.

(3) Storm drainage systems shall be designed to consider the storm drainage basin as a whole and shall accommodate not only runoff from the development but also, where applicable, the runoff from those areas adjacent to and "upstream" from the development itself, as well as its effects on lands downstream.

(4) Storm drainage basins shall be designed and maintained to ensure that stormwater drains completely from any storm drainage basins within 72 hours after being filled to any capacity by a storm. If an owner of property containing a storm drainage basin fails to ensure the complete drainage of the basin within the 72-hour period described in this section, a representative or agent of the City's Public Works department may, for the safety and welfare of its citizens, intervene and enter onto the property of the storm water basin and take steps reasonably necessary to ensure the complete drainage of the basin. The City may then charge the owner of property containing the storm drainage basin the costs incurred by the City to completely drain the storm drainage basin.

(5) Storm drainage design and construction shall comply with Grantsville City Storm Drainage Design Requirements.

Docusign Envelope ID: 2F277711-A43E-4D2D-A721-2DCFCFCA18C5

GRANTSVILLE CITY
STORM DRAINAGE DESIGN REQUIREMENTS

1. **Storm Water Collection System Requirements:**

   a) Design Storms:
   The storm water pipe collection system shall be designed to convey the 24-hour duration – Annual Exceedance Probability (AEP) 10-percent (10%) storm, 24-hour duration event if there is a continuous pathway to the Great Salt Lake. Collection systems for basin and street shall be sized for the AEP 1-percent (1%) storm, 24-hour duration event when discharging to an approved City release point.

   Note: The AEP 10-percent (10%) storm is equivalent to a 10-year recurrence interval storm and an AEP 1-percent (1%) storm is equivalent to a 100-year recurrence interval storm. The 10-year and 100-year terms are not used by Grantsville City to reduce confusion and accurately convey such storms have a 10-percent or 1-percent chance of occurring in any given year, rather than implying these events happen once every 10-years or 100-years.

   b) Storm Water Runoff into Street Encroachment Requirements:

   i. Flow from the AEP 10-percent (10%) storm shall not extend more than halfway into the travel lane adjacent to the curb and a minimum 12-foot wide travel lane shall be maintained for emergency vehicles. If there is a curb then total spread must be no more than 8-feet from the curb face.

   c) Easement and Access Requirements:

   i. Easement widths and access for drainage channels, detention/ retention basins, lots line swales, and public storm drainage lines shall be reviewed and approved by the City Engineer. Access easements shall be a minimum width of 15-feet.

   d) Acceptable Pipe Materials:

   i. Refer to the current City's preconstruction notes for acceptable pipe materials.

   e) Minimum Pipe Diameter and Slope:

   i. The minimum pipe diameter for any public storm water collection system pipe is 15-inches with a minimum slope of 0.50 percent. If pipe diameter and slope is below the minimum standards then approval from the City Engineer is required.

   f) Manhole Spacing:

   i. Minimum manhole spacing is 400-feet, unless otherwise approved by the City Engineer.

   g) Storm Drain Structure Drops:

   i. Where changes in pipe sizes occur in a manhole, the inlet pipe crown must match or be higher than the larger outlet pipe crown.

   h) Cover:

   i. Minimum cover is 18-inches or 6 inches below the pavement section whichever is greater, unless approved by City Engineer. Pipe cover must comply with pipe manufacturer's recommendations.

   i) Catch Basin Requirements:

   i. Catch basins will not be allowed on the radius of curves at intersections.

   ii. Flow through catch basins shall not be allowed unless designed as a combination box with manhole lid access. Locked gate access with keys for designate basin maintenance personnel and for City emergency access shall be provided.

   iii. A manufactured snout or similar oil/debris/water separator is required prior to a detention basin, retention basin, or any other discharges from a development into a public drainage. Sump depth in

Docusign Envelope ID: 2F277711-A43E-4D2D-A721-2DCFCFCA18C5

catch basin with snout shall be sized as recommended by snout manufacturer.

iv. Catch basins shall be installed at maximum intervals of 400-feet where channelized flow is occurring.

j) Detention/Retention Basin Requirements:

i. Public, private, or HOA detention/retention basins shall have 6-foot tall (finish grade to top of sign) telespar, or City approved, post with the following signs:

   a. "Stormwater Basin" 12-inch x 18-inch Sign
   b. "No Trespassing" 12-inch x 18-inch Sign
   c. Each sign shall be RA Type I Engineering Grade Prismatic Reflective Sheeting on 0.080 aluminum.

ii. Public detention/retention basins with amenities shall have 6-foot tall (finish grade to top of sign) telespar, or City approved, post with the following signs:

   a. "No Dumping" 12-inch x 18-inch Sign
   b. "Stormwater Basin
      Designed to collect runoff from the local storm sewer system following either a rainfall or snowmelt event.
      Basins temporarily hold this stormwater, provides treatment to remove pollutants, and then slowly release the water back to our waterways.
      No swimming, use at your own risk." 18-inch x 24-inch Sign
   c. Each sign shall be RA Type I Engineering Grade Prismatic Reflective Sheeting on 0.080 aluminum.

iii. Storm water drainage areas need to include front yards and rear yards in the developments calculations if they do not include individual lots detention/ retention basins.

iv. Retention basins shall completely infiltrate and drain within 72-hours from the beginning of a storm event for vector control. Infiltration tests shall be performed using the double ring infiltrometer test in accordance with ASTM D 3385 for all retention basins. The test shall be completed at the elevation of the bottom of the basin where infiltration will occur. A factor of safety of two (2) shall be used for design and a minimum of two (2) tests shall be completed with a minimum of one (1) test per 10,000 square feet of infiltration area. These tests shall be submitted with drainage calculations to the City for review.

v. Storm water dry wells, injections wells, or any underground storm water discharge structure is acceptable in the City, but shall comply with the Utah Department of Environmental Quality (UDEQ) Underground Injection Control (UIC) program requirements. Proof of an application pertaining to the development has been submitted under the UIC program shall be provided to the City for their records. Special consideration shall be given to water quality, groundwater depth, and other factors. Individual or single family homes may be exempt from these requirements. Please contact the Utah Department of Environmental Quality - Water Quality for clarification. Developments may use percolation tests for underground systems which infiltrate in the horizontal and vertical planes.

vi. 1-foot freeboard minimum above the AEP 1-percent (1%) storm, 24-hour duration event when discharging water level through spillway is required. Spillway shall be reinforced with concrete per City Detail.

vii. Detention/retention basin minimum of top berm width shall be 3-feet.

viii. Vegetate basins with turf, if irrigated, or native seeded grass for maintenance purposes. If turf is installed, turf soil shall be free draining, not include clay soils, and not impact stormwater infiltration.

ix. Rocks or gravel surfacing of detention/retention basins are not allowed without City approval.

x. Detention/retention basins with amenities shall have accessible path to amenity which is a concrete sidewalk meeting ADA standard. Interior slope of detention/retention basin at ramp shall be between 8 Horizontal:1 Vertical to 12 Horizontal:1 Vertical slope.

k) Manning's n Values:

i. n value for linings shall be determined per an approved Engineers Manual based on size and placement of materials. Calculations shall include the reference used for the n value for review by the City Engineer.

Manning's Roughness n for Open Channels			
Channel Type	**Manning n**		
	Minimum	**Normal**	**Maximum**
1. Lined or Constructed Channels			
a. Cement:			
1. Neat, surface	0.01	0.011	0.013
2. Mortar	0.011	0.013	0.015
b. Concrete:			
1. Trowel finish	0.011	0.013	0.015
2. Float finish	0.013	0.015	0.016
3. Finished, with gravel on bottom	0.015	0.017	0.02
4. Unfinished	0.014	0.017	0.02
5. Gunite, good section	0.016	0.019	0.023
6. Gunite, wavy section	0.018	0.022	0.025
7. On good excavated rock	0.017	0.02	-
8. On irregular excavated rock	0.022	0.027	-
c. Concrete Bottom Float Finish with sides of:			
1. Dressed stone in mortar	0.015	0.017	0.02
2. Random stone in mortar	0.017	0.02	0.024
3. Cement rubble masonry, plastered	0.016	0.02	0.024
4. Cement rubble masonry	0.02	0.025	0.03
5. Dry rubble or riprap	0.02	0.03	0.035
d. Gravel Bottom with sides of:			
Channel Type	**Manning n**		

1. Formed concrete	0.017	0.02	0.025
2. Random stone mortar	0.02	0.023	0.026
3. Dry rubble or riprap	0.023	0.033	0.036
e. Brick:			
1. Glazed	0.011	0.013	0.015
2. In cement mortar	0.012	0.015	0.018
f. Masonry:			
1. Cemented rubble	0.017	0.025	0.03
2. Dry rubble	0.023	0.032	0.035
g. Dressed Ashlar / Stone Paving	0.013	0.015	0.017
h. Asphalt:			
1. Smooth	0.013	0.013	0.017
2. Rough	0.016	0.016	0.017
i. Vegetal Lining	0.03	-	0.5
j. Wood:			
1. Planed, untreated	0.01	0.012	0.014
2. Planed, creosoted	0.011	0.012	0.015
3. Unplaned	0.011	0.013	0.015
4. Plank with battens	0.012	0.015	0.018
5. Lined with roofing paper	0.01	0.014	0.017
2. Excavated or Dredged Channels			
a. Earth, Straight, and Uniform:			
1. Clean, recently completed	0.016	0.018	0.02
2. Clean, after weathering	0.018	0.022	0.025
3. Gravel, uniform section, clean	0.022	0.025	0.03
4. With short grass, few weeds	0.022	0.027	0.033
b. Earth Winding and Sluggish:			
1. No vegetation	0.023	0.025	0.03
2. Grass, some weeds	0.025	0.03	0.033
3. Dense weeds or aquatic plants in deep channels	0.03	0.035	0.04
4. Earth bottom and rubble sides	0.028	0.03	0.035
5. Stony bottom and weedy banks	0.025	0.035	0.04
6. Cobble bottom and clean sides	0.03	0.04	0.05
c. Dragline-Excavated or Dredged:			
1. No vegetation	0.025	0.028	0.033
2. Light brush on banks	0.035	0.05	0.06
d. Rock Cuts:			
1. Smooth and uniform	0.025	0.035	0.04
Channel Type	**Manning n**		

2. Jagged and irregular	0.035	0.04	0.05
e. Channels not Maintained, Weeds and Brush Uncut:			
1. Dense weeds, high as flow depth	0.05	0.08	0.12
2. Clean bottom, brush on sides	0.04	0.05	0.08
3. Same as above, highest stage of flow	0.045	0.07	0.11
4. Dense brush, high stage	0.08	0.1	0.14
3. Main Channels			
a. Clean, straight, full stage, no rifts or deep pools	0.025	0.03	0.033
b. Same as above, but more stones and weeds	0.03	0.035	0.04
c. Clean, winding, some pools and shoals	0.033	0.04	0.045
d. Same as above, but some weeds and stones	0.035	0.045	0.05
e. Same as above, lower stages, more ineffective	0.04	0.048	0.055
f. Same as (d) with more stones	0.045	0.05	0.06
g. Sluggish reaches, weedy, deep pools	0.05	0.07	0.08
h. Very weedy reaches, deep pools, or floodways with heavy stand of timber and underbrush	0.075	0.1	0.15
4. Mountain Streams, No Vegetation in Channel, Banks usually Steep, Trees and Brush along Banks Submerged at High Stages			
a. Bottom: gravels, cobbles, and few boulders	0.03	0.04	0.05
b. Bottom: cobbles with large boulders	0.04	0.05	0.07

Source:

(1) ASCE, (1982), Gravity Sanitary Sewer Design and Construction, ASCE Manual of Practice No. 60, New York, NY.

(2) Chow, V.T., (1959), Open Channel Hydraulics, McGraw-Hill, New York, NY.

l) Riprap Sizing:

i. Channel Riprap sizing calculation shall utilize Federal Highway Administration (FHWA) Hydraulic Engineering Circular (HEC) No. 14, Current Edition, Chapter 10 or equivalent standard.

m) Erosion Control:

i. The developer shall provide a copy of their Fugitive Dust Mitigation Plan, Erosion Control Plans, SWPPP, Notice of Intent (NOI), and Notice of Termination (NOT) with the State if their construction project is greater than 1 acre. The SWPPP sign shall be posted on site and visible to adjacent public right-of-way.

2. **<u>Hydrology Requirements:</u>**

a) Rainfall Data:

i. NOAA Atlas 14 shall be used for rainfall in the City of Grantsville (see https://hdsc.nws.noaa.gov/hdsc/pfds_map_cont.html)

b) Design Storms:

i. To reduce post-development storm water runoff, developments must retain and treat the 80th percentile rainfall event. The 80th percentile rainfall event for Grantsville City is 0.50 inches. The

Reese method, as shown below, shall be used to calculate the volumetric runoff coefficient used for determining the 80th percentile volume. For developments larger than 10 acres use the SCS Method to determine the 80th percentile volume.

a. Sedimentation basin shall be provided for first flush/80th percentile rainfall events in retention/detention basins and shall be designed to be easily accessed and maintained.

i. Method 1- Reese Method:

1. Comparing the imperviousness of 44 nationwide sites to their respective calculated volumetric runoff coefficient, a simple linear regression equation was created to estimate the volumetric runoff coefficient for small urban catchments. Land uses for these sites were classified as residential, mixed, commercial, industrial, and urban open and nonurban (Schueler, Controlling Urban Runoff: A Practical Manual for Planning and Designing Urban BMPs, 1987). Outliers were removed from this dataset by Reese to derive the equation below. Removing outliers from the dataset reduces the impact of erroneous measurements (Reese, 2006). $RV=0.91i-0.0204$

Source: A Guide to Low Impact Development within Utah. Revised August 2020 by Michael Baker International.

ii. Retain/Detain the AEP 1-percent (1%) storm, 24-hour duration event for project site.

iii. Developments may detain the AEP 10-percent (10%) storm event, 24-hour duration if there is a continuous pathway to the Great Salt Lake.

iv. For West Bank drainage areas, developed drainage may discharge at the following rates if there is a continuous path to the Great Salt Lake:

Table 1: Unit Discharge Requirement for West Bank Watersheds

24-hour Duration Storm Event	Watershed's Peak Unit Discharge (cfs/acre)	All Other Watersheds Peak Unit Discharge (cfs/acre)
10 year	0.003	0.05
100 year	0.01	0.15

Source: Table 17 in Section 5 from the Storm Water Management Study for Baker and Pope Watersheds dated *April 2015 by AQUA Engineering.*

v. Refer to Table 2 and Figure 1 for a map of West Bank Watersheds.

Table 2: West Bank Sub-basin Number and Name

Subbasin	Subbasin Name
1	South Willow and Coal Pit Canyon
2	North Willow Canyon
3	White Rocks
4	Baker Canyon
5	Pope Canyon
6	West Canyon 1
7	West Canyon 2
8	Dry Canyon
9	Unnamed

Source: Grantsville West Bank Development Stormwater Master Plan Report by Jones & DeMille Engineering

Docusign Envelope ID: 2F277711-A43E-4D2D-A721-2DCFCFCA18C5

Figure 1: Map of West Bank Watersheds

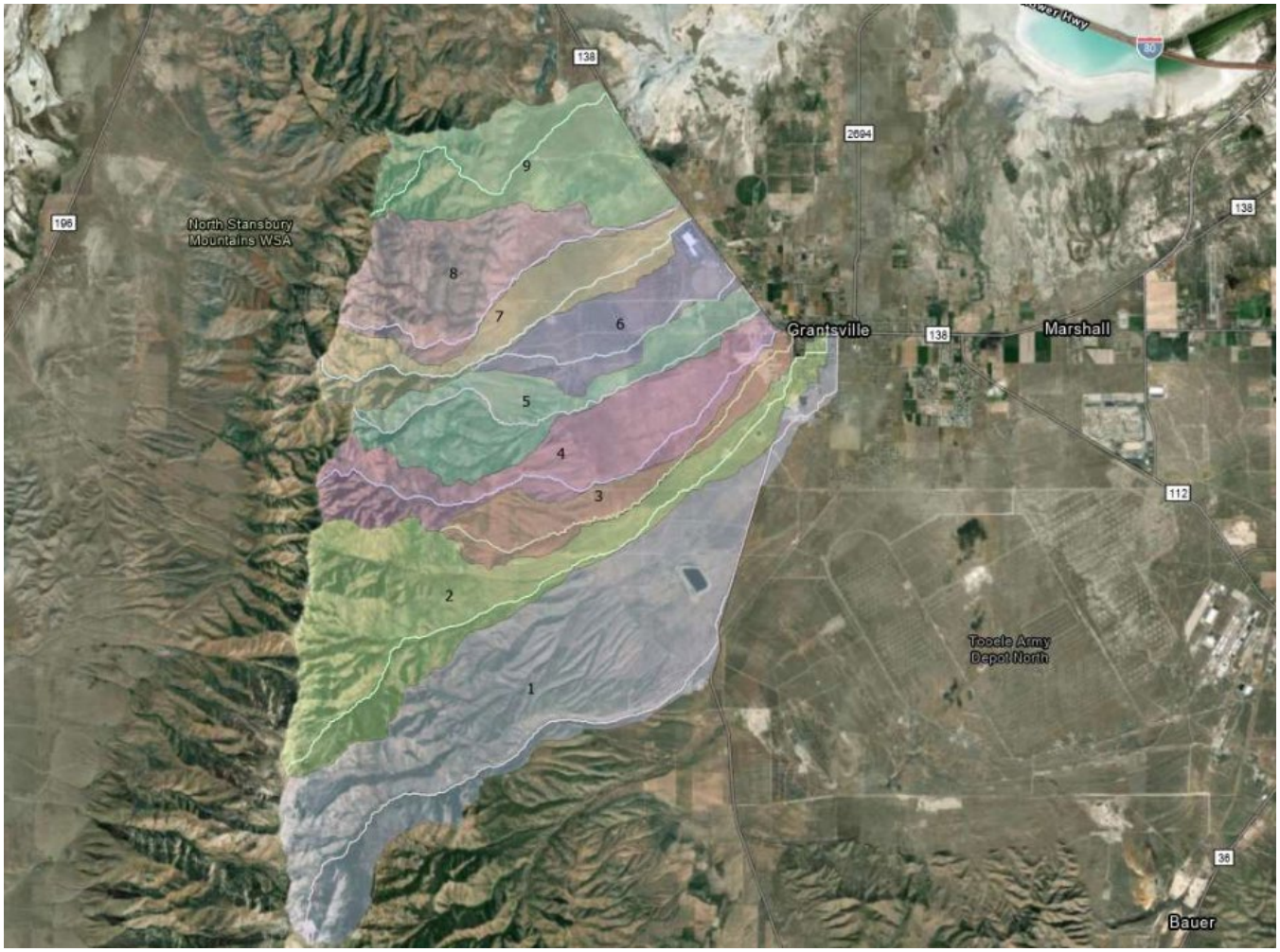

Source: Grantsville West Bank Development Stormwater Master Plan Report by Jones & DeMille Engineering

vi. The West Bank area consists of alluvial fans which are an accumulation of sediments fanning outwards from a concentrated source of sediments. Alluvial fans are typically formed where flow emerges from a confined channel and is free to spread and infiltrate. Due to these sediments, deposits in an alluvial fan can cause the defined channels to shift courses which is why it is important to construct sedimentation basins at the top of the alluvial fan and reinforce and define channels throughout the fan to discharge safely through existing and proposed development avoiding riverine flooding. Recently the West Bank Area has been identified as an alluvial fan Zone A based on a Base Level Engineering (BLE) analysis. This area is currently being studied by the State in more detail, but the results are currently not available. Channelization through the alluvial fan and sedimentation basins above the alluvial fan are improvements to allow storm water to flow through developments or mitigate alluvial fan hazards. Mitigation measures within the alluvial fan will need to be constructed to remove hazards either regionally or localized. Developers should coordinate with the State and FEMA MT-2 team (LOMR reviewers) along with the City and County to work through development in the alluvial fan.

3. **Drainage Calculations or Report Requirements:**
   a) If discharge will be above the allowed discharge per area rates shown on Table 1 then a pre and post development hydrologic analysis will be required showing flows will not cause a negative affect downstream. The Rational Method (Q=CiA) may be used in computations for the rate of runoff for urban and small watershed 100 acres or less.
      i. Q = peak rate of runoff, cubic feet per second
      ii. C = runoff coefficient
      iii. i= average rainfall intensity, inches per hour
   b) The SCS method, SCS TR-55 "Urban Hydrology for Small Watershed", HEC-1/HEC-HMS, or other methods shall be used for larger watersheds.
   c) Table 2 shall be used for runoff coefficients unless approved by the City Engineer.

Table 2: Runoff Coefficients

Land Use Type	Runoff Coefficients "C"
Rural	0.25-0.35
Single Family Residential	0.45-0.60
Multi-Residential	0.60-0.70
Neighborhood Commercial	0.85
Community Commercial	0.85
Tourist Commercial	0.85
Office	0.85
Manufacturing	0.85-0.90
Distribution and Warehousing	0.85-0.90
Public Facility	0.50-0.85
Pavement and Concrete Surfaces	0.90-0.95
Park	0.25
Open Space (0-5% grade – vegetated)	0.20-.030
Open Space (0-5% grade – no vegetation)	0.30-0.40
Open Space (5-15% grade – vegetated or unvegetated)	0.40-0.50
Open Space (Over 15% grade – sparsely vegetated, rock or clay soils	0.40-0.60

      i. Weighted values of the runoff coefficient "C" may be required where land use is most accurately described as a mixture of the land uses listed above or where it is a mixture of pervious and impervious areas and not represented by a single entry in Table 2.
   d) Intensity-Duration-Frequency curves for NOAA Atlas 14 shall be used for determining the applicable intensity. (see https://hdsc.nws.noaa.gov/hdsc/pfds/pfds_map_cont.html?bkmrk=ut)
   e) Definition for Time of Concentration
      i. $t_c = 10$ or $\frac{L}{V \times 60}$ whichever is greater

         t_c = initial time of concentration at inlet, minutes
         L = Flow line length from uppermost point of watershed to the discharge point, feet
         V = channel or overland velocity, feet per second

         * Velocity shall be calculated using NRCS Urban Hydrology for Small Watersheds, current edition, or equivalent standards.
      ii. Given the time of concentration at a design point, the time of concentration at the next design point is

Docusign Envelope ID: 2F277711-A43E-4D2D-A721-2DCFCFCA18C5

determined by adding travel time, expressed as:

iii. $t = \frac{L}{V \times 60}$

t = travel time, minutes
L = length of channel or conduit between design points, feet
V = channel or conduit, feet per second

4. **Submittal Requirements for Drainage Drawings and Report**
   a) **Project Drawings:**
      i. Hydraulic grade line (HGL) profiles, (see sample sheet).
      ii. Location and size of all existing and proposed structures.
      iii. Proposed materials.
      iv. Pertinent elevations and slopes.
      v. Pipe capacity, and the AEP 10-percent (10%) storm, and the AEP 1-percent (1%) storm, 24-hour flows, and velocities.
   b) **Drainage Report or Calculations: (Shown on Drawings)** – The following standards apply to the Drainage Report or Calculations (public and private).
      1. **Title Page:**
         a. Project name.
         b. Preparer's name, firm, date.
         c. Professional engineer's seal of preparer and signature.
      2. **Introduction:**
         a. **Site location:**
            i. Street location, parcel number(s), and section reference.
            ii. Adjacent developments.
         b. **Site Description:**
            i. Topography, ground cover, etc.
            ii. Existing drainage facilities, major drainage facilities, flood hazard areas, irrigation ditches, other site conditions that must be considered.
         c. Proposed project description.
         d. Other previous studies relevant to site.
      3. Historic drainage system (discuss the following):
         a. Major basins and offsite contributions:
            i. Relationship to major drainage facilities.
            ii. Major basin drainage characteristics (topography, runoff, cover, use, erosion, etc.).
         b. Sub-basin and site drainage (i and ii may be tabulated on map):
            i. Minor AEP 10-percent (10%) storm and major AEP 1-percent (1%) storm, 24-hour storm flows for each sub-basin affecting the site.
            ii. Existing drainage patterns: channelized or overland flow, point of discharge, etc.
            iii. Effect of historic flows on adjacent properties.
      4. **Proposed (developed) drainage system:** (discuss each of the following)
         a. **Criteria:**
            i. Size of major basins, tributary sub-basins, and other offsite contributions.
            ii. Hydrologic method to be used for analysis (Rational, SCS, etc.).

Docusign Envelope ID: 2F277711-A43E-4D2D-A721-2DCFCFCA18C5

iii. Design storm intensities (minor AEP 10-percent (10%) storm, major the AEP 1-percent (1%) storm, 24-hour duration event,) or as required by the City Engineer.

b. **Runoff And Other Contributions:**
   i. Historic storm flow rates and paths.
   ii. Developed storm flow rates and paths for minor and major storms.
   iii. Contributions from open joined system.
   iv. Demonstrate flows are routed to a public system with adequate capacity when/ if available.

c. **Piping:**
   i. Demonstrate the capacity of the storm drain system, including all downstream improvements.
   ii. Verify storm flows and capacity from inlets to ultimate outlets of the drainage system.

d. **Detention/Retention System Including:**
   i. Volume required to hold the AEP 1-percent (1%) storm, 24-hour storm with 1-foot freeboard minimum above the AEP 1-percent (1%) storm, 24-hour event flowing water level through spillway.
   ii. Show the overflow location for volumes over the AEP1-percent (1%) storm, 24-hour duration event when discharging to an approved City release point..
   iii. Passage of storms exceeding the AEP 10-percent (10%) storm up to the AEP 1-percent (1%) storm, 24-hour duration event when discharging to an approved City release point..
   iv. Engineer to provide detailed description of downstream constraints (or none) and design calculations on how to mitigate the problem.
   v. Need for detention/retention shall be clearly identified in the preliminary or schematic report and the necessary detention/retention area shall be identified on preliminary plans.

e. **Streets:** (This information may be shown on the plans.)
   i. Depth and velocity of flow for major and minor storms. Demonstrate a 12-foot clear lane exists for emergency vehicles at all times.
   ii. Drainage system.

f. **Open Channel Flow:** (This information may be shown on the plans.)
   i. Type.
   ii. Depth and velocity.
   iii. Freeboard.
   iv. HEC-RAS analysis when required by the City Engineer.

g. Storm drains and culverts (Show all data on plans.)

5. **<u>Areas within flood hazard zone when applicable:</u>**
   a) Impacts.
   b) Protection.
   c) Compliance with Federal Emergency Management Administration (FEMA) requirements, RMC 18.12 "Flood Hazard Areas", and critical flood zones. Show existing and proposed CLOMR and LOMR information, and show status of submittal and review process.
   d) Provide elevation certificate for occupied structures within current BLE floodway determination. Coordinate with Utah Flood Hazards and Floodplain management for 2-D HEC-RAS model for BFE.
   e) Comply with Grantsville City Code, Chapter 5-3, Flood Damage Prevention Regulations.

6. **<u>Conclusions:</u>**
   a) Benefits.
   b) Adverse effects with solutions for mitigation of impacts.

7. **<u>Appendices:</u>**
   a) Hydrologic and hydraulic computations:

i. List and explain basin assumptions and input factors used.
   1) Tabularized and/or discussed as necessary.
   2) Indicate any sensitivity analysis performed.
   3) Include source tables and references for parameters, such as soil groups, SCS curve numbers, C values, n values, etc.

ii. Historic Runoff:
   1) Off-site.
   2) On-site.

iii. Developed Runoff:
   1) Off-site – Flows that have been concentrated into one area from the project shall not flow higher than the project flow in that area.
   2) On-site.

iv. Detention for up to the AEP 1-percent (1%) storm, 24-hour duration event when discharging to an approved City release point:

v. Hydraulic Computations:
   1) Hydraulic grade line (HGL) minor storm.
   2) Hydraulic grade line (HGL) major storm.
   3) Inlet/outlet calculations.

vi. Rip-rap sizing:

b) Drainage Plan:

i. Site Drainage Plan:
   1) Show the existing and proposed contours for the property.
   2) The site drainage plan may be at the same scale as the grading plan but must meet legibility requirements for scanned documents. Show all sub-drainage areas per catch basin or channel and tabulate existing and proposed drainage showing length, calculated velocity and time of concentration on various runs of grass, gutters, etc., cumulative time of concentration, average rainfall intensity, area, runoff coefficient (weighted if necessary), and peak flows for the AEP 10-percent (10%) storm and the AEP 1-percent (1%) storm, 24-hour duration event when discharging to an approved City release point.
   3) All inlets and manholes shall be labeled to correspond to tabular numbering system used in drainage report. Pipe sizes, grades, velocities, peak flows and hydraulic grade lines shall be shown for all parts of the system in a tabular form on the plans.
   4) Both location plan (overall drainage) and sub-drainage plan shall be signed and sealed by a Utah Registered Civil Engineer and shall be included in the construction plans for the subdivision/development.
   5) On grading plans show peak flows for the AEP 10-percent (10%) storm and the AEP 10-percent (10%) storm at inlets and other sub-basin points of concentration, at discharge points and in channels. Show peak flows entering and leaving the site; trace path leaving site to nearest major drainage facility without adverse impact to downstream owners.
   6) On plan and profile sheets, show peak flows for the AEP 10-percent (10%) storm and the AEP 1-percent (1%) storm, 24-hour duration event when discharging to an approved City release point at all inlets and in pipes as per above, and in pipes show slope, velocity, and capacity, and hydraulic grade line if surcharged.
   7) If the lot cannot drain the yard to the street, then a basin shall be located in the rear yard to prevent storm runoff from draining to the neighbors from the back of the property.

Docusign Envelope ID: 2F277711-A43E-4D2D-A721-2DCFCFCA18C5

ii. Benchmarks – To be shown on plans with benchmarks to match the existing state approved benchmarks.

iii. Existing and proposed property lines.

iv. Existing and proposed drainage easements.

v. Street names, grades, widths and rights-of-way or easements.

vi. Routing and peak flow rate or volume at the upstream and downstream ends of the site and at various critical points on-site for both minor and major runoff. Depth and hydrograph for both storms for all sub basins.

vii. Street cross sections showing the AEP 1-percent (1%) storm, 24-hour duration event when discharging to an approved City release point flood levels, no more than one-half way into the outside travel lane for emergency vehicle clear lane.

viii. Existing and proposed major drainage facilities.

ix. Open channel flow in major channels shall be provided with the following information on plans:

1) Channel and hydraulic grade line (HGL) profiles.
2) Cross sections and required rights-of-way or easements at the AEP 1-percent (1%) storm, 24-hour duration event intervals or changes from the typical section.
3) Location and size of all existing and proposed structures.
4) Channel section and lining details.
5) Freeboard for the AEP 1-percent (1%) storm, 24-hour duration event when discharging to an approved City release point.
6) Channel capacity and storm flows, the AEP 10-percent (10%) storm and the AEP 1-percent (1%) storm, 24-hour duration event when discharging to an approved City release point flows and velocities.

Docusign Envelope ID: 2F277711-A43E-4D2D-A721-2DCFCFCA18C5

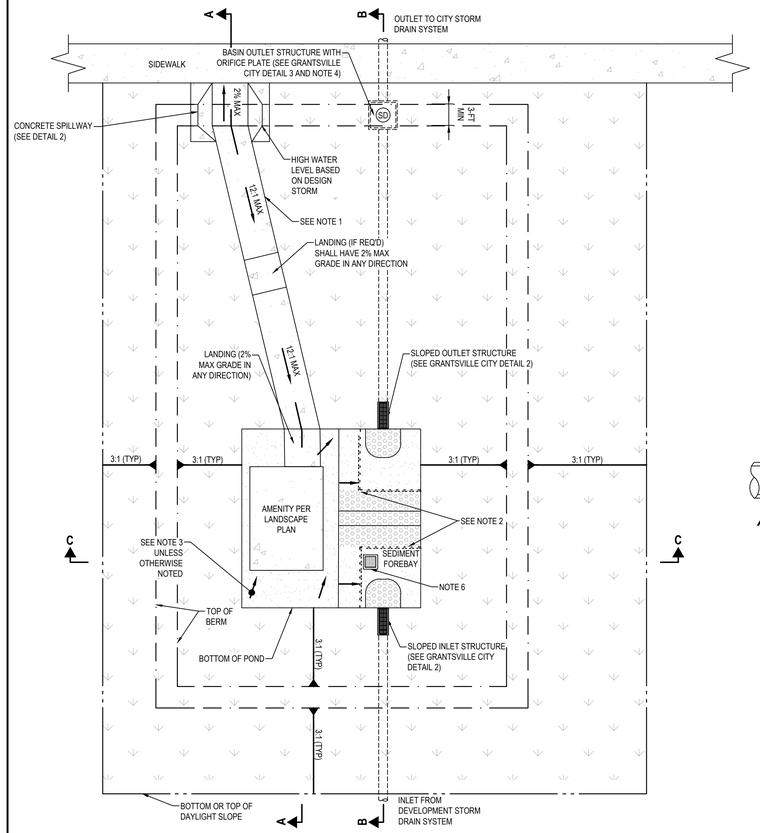

SITE PLAN

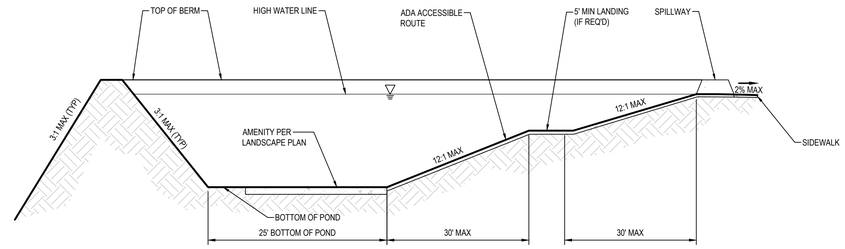

SECTION A-A

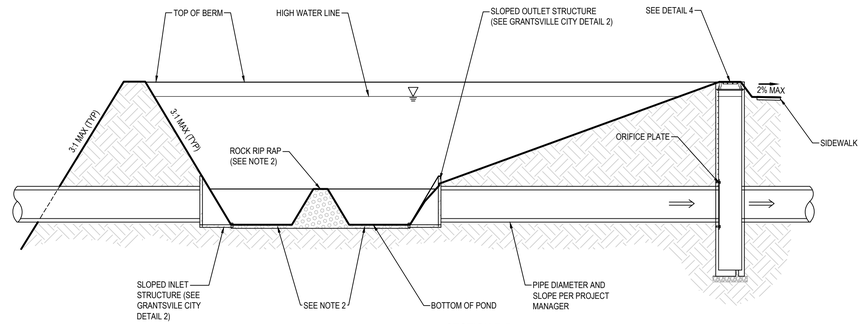

SECTION B-B

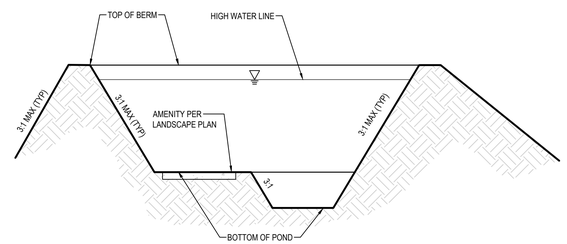

SECTION C-C

NOTES:

1. ACCESSIBLE PATH TO AMENITY SHELL BE CONCRETE SIDEWALK AND MEET ADA STANDARDS
2. SEDIMENT FOREBAY TO BE MINIMUM 12-INCHES BELOW BOTTOM OF AMENITY AREA AND BE SEPARATED FROM DISCHARGE AREA BY ROCK RIP RAP PROPERLY SIZED.
3. BASIN BOTTOM SHALL BE SLOPED TOWARDS OUTLET STRUCTURE AT A MINIMUM 1%. INCLUDE 2 TO 3-INCHES OF GRAVEL.
4. RETENTION BASIN WOULD NOT HAVE OUTLET STRUCTURE TO CITY STORM DRAINAGE SYSTEM.
5. ROCK RIP RAP AT INLET AND OUTLET STRUCTURE.
6. IF POND WILL NOT INFILTRATE IN 72 HOURS, PROVIDE PERFORATED CATCH BASIN OR MANHOLE WITH GRATE LID AND GRAVEL SUMP TO A DEPTH OF SOIL WITH HIGHER INFILTRATION
7. REFER TO GRANTSVILLE CITY STORM DRAINAGE DESIGN REQUIREMENTS

1 DETENTION/RETENTION BASIN WITH AMENITY DETAIL

SCALE: NONE

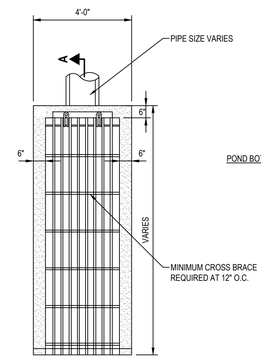

PLAN

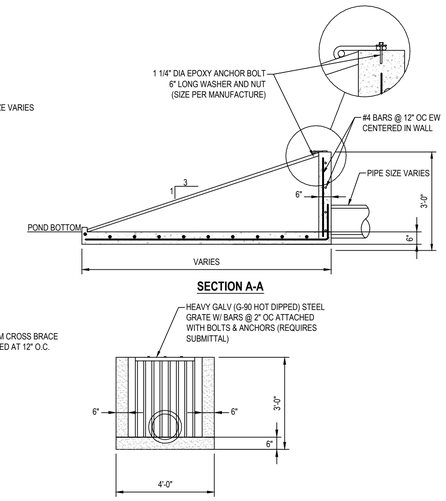

SECTION A-A

ELEVATION

2 INLET/OUTLET STRUCTURE DETAIL

SCALE: NONE

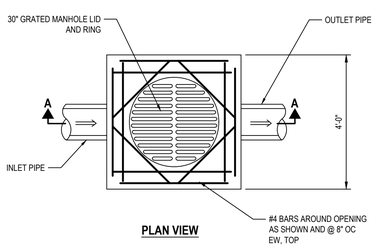

PLAN VIEW

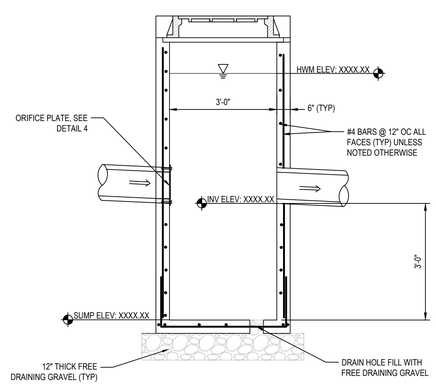

SECTION A-A

3 BASIN OUTLET STRUCTURE

SCALE: 1/2" = 1'-0"

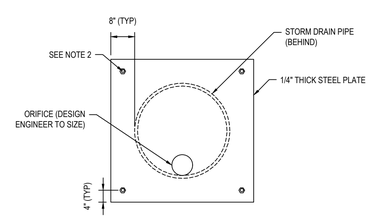

NOTES:

1. STEEL: ASTMA 36 STEEL
2. BOLTS: USE 1/2 INCH STAINLESS STEEL BOLTS WITH 1/8 INCH STAINLESS STEEL WASHERS.
3. FINISH: HOT DIPPED GALVANIZED

4 ORIFICE PLATE DETAIL

SCALE: 1" = 1'-0"

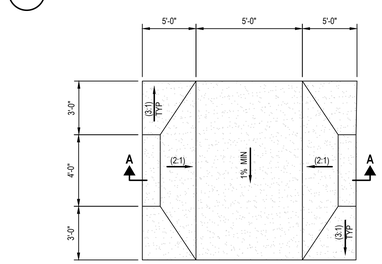

PLAN VIEW

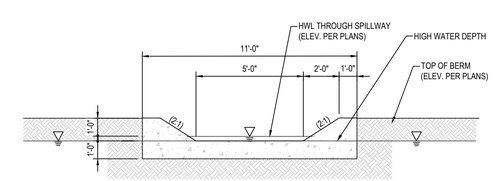

SECTION A-A

5 CONCRETE SPILLWAY DETAIL

SCALE: NONE

GRANTSVILLE CITY

DETENTION/RETENTION BASIN WITH AMENITY DETAIL

Docusign Envelope ID: 2F277711-A43E-4D2D-A721-2DCFCFCA18C5

STATE OF UTAH)
) SS:
COUNTY OF TOOELE)

I, Braydee Baugh, do hereby certify that I am the duly appointed, qualified and acting Recorder for the Grantsville City Council, (the “City"), State of Utah, and do further certify that the above and foregoing is a true and correct copy of Ordinance 2024-36 duly adopted by the City of Grantsville, by the Council thereof at a meeting duly called and held in Grantsville, UT on the 4th of December, 2024 at the hour of 7:00 o'clock p.m. of said day, and I certify that after its passage I caused to be published a short summary of the ordinance on the Utah Public Notice Website on the 5th of December, 2024

Publication – Utah Public Notice Website

(S E A L)

DocuSigned by:
Braydee Baugh
9CB64E7D323F486...

Braydee Baugh
City Recorder