NOTICE AND AGENDA
SANTA CLARA CITY COUNCIL MEETING
Wednesday, April 10, 2024
Time: 5:00 p.m.
AMENDED
AGENDA

Public Notice is hereby given that the Santa Clara City Council will hold a Regular Meeting in the City Council Chambers, located at 2603 Santa Clara Drive, Santa Clara, Utah on Wednesday April 10, 2024 commencing at 5:00 PM. The meeting will be broadcast via You Tube linked on our website at https://santaclarautah.gov

1. **Call to Order**

2. **Opening Ceremony:**
   - Pledge of Allegiance: Janene Burton
   - Opening Comments: Carole Drake, Saint George Catholic Church, St. George Interfaith Council.

3. **Conflicts and Disclosures**

4. **Working Agenda:**

A. Public Hearing(s) 5:00 pm. (None)

Consent Agenda

1. Approval of Claims and Minutes:
   - March 27, 2024 Regular City Council Meeting Minutes
   - Claims through April 10, 2024

2. Calendar of Events:
   - April 17, 2024 City Council Work Meeting
   - April 24, 2024 Regular City Council Meeting
   - May 8, 2024 Regular City Council Meeting

B. General Business:

1. Discussion and action to consider a proposed Partial Plat Amendment for the Snow Canyon Estates Subdivision. Lots 1 and 3, located at 1784 Lava Cove Drive and 2536 Stephanie Lane. The applicant, Jon Ence is proposing to build a detached garage in the rear yard of his Property. Presented by Jim McNulty, City Planner.

2. Discussion and action to consider a proposed Partial Plat Amendment for the Hills at Santa Clara Phase 2B, Lots 210 and 233. The applicant/owner, Charles Gay , is proposing to Increase the size of Lot 210 for a future home and add Lot233 (parcel #SC-6-12-17-7394) into the subdivision. The proposed Lot 233 includes existing subdivision improvements already in place. Presented by Jim McNulty, City Planner.

3. Consider approval of the spring slurry seal project to the low bidder Asphalt Preservation for .17 cents per sq. ft. of type II slurry seal for the amount of $312,631.36. Presented by Dustin Mouritsen, Public Works Director.

4. Discussion and action to consider approval of a Pump for the Crestview Elementary Irrigation Line. Presented by Dustin Mouritsen, Public Works Director.

5. Discussion and action to consider approval of Resolution 2024-05R, Authorizing a Tax Certificate. A Special provision that allows Tax-Exempt Bonds to be issued to finance Prepayments for natural gas and electricity. Presented by Gary Hall, Power Director.

6. Discussion and Action to consider approval of Agreement for Professional Services. Presented by Cody Mitchell, Building Official.

5. **Reports:**
   a. Mayor / Council Reports:

6. **Executive Session:**

7. **Adjournment:**

Note: In compliance with the Americans with Disabilities Act, individuals needing special accommodation during this meeting should notify the city no later than 24 hours in advance of the meeting by calling 435-673-6712. In accordance with State Statute and Council Policy, one or more Council Members may be connected via speakerphone or may by two-thirds vote to go into a closed meeting.

Zoom Meeting Participants: Participants on the Zoom call is limited to City Staff, Council Members, and applicants on the agenda. Email calendar invitations will be sent out in advance of the meeting. Instructions for each meeting will include the meeting ID, and password to join. When joining the meeting your screen name must show your full name. Each applicant will be accepted into the meeting when their item is up for discussion. Please contact Chris Shelley at (435)673-6712 Ext. 203 with any questions regarding public meetings.

The undersigned, duly appointed City Recorder, does hereby certify that the above notice and agenda was posted within the Santa Clara City limits on this 2nd day of April 2024 at Santa Clara City Hall, on the City Hall Notice Board, at the Santa Clara Post Office, on the Utah State Public Notice Website, and on the City Website at http://www.sccity.org. The 2024 meeting schedule was also provided to the Spectrum on January 1, 2024.

_____

Chris Shelley – City Recorder

SANTA CLARA CITY COUNCIL MEETING
WEDNESDAY, MARCH 27, 2024
MINUTES

THE CITY COUNCIL FOR THE CITY OF SANTA CLARA, WASHINGTON COUNTY, UTAH, met for a Regular Meeting on Wednesday, March 27, 2024, at 5:00 p.m. in the City Council Chambers of the Town Hall at 2603 Santa Clara Drive, Santa Clara, Utah. Notice of the time, place, and agenda of the meeting was provided to *The Spectrum* and to each member of the governing body by emailing a copy of the Notice and Agenda to *The Spectrum* and also, along with any packet information, to the mayor and each council member, at least two days before the meeting. The meeting will be broadcast via YouTube linked on our website at https://santaclarautah.gov.

Mayor:	Rick Rosenberg
Council Members:	Janene Burton Christa Hinton Dave Pond Ben Shakespeare Jarett Waite
City Manager:	Brock Jacobsen
City Recorder:	Chris Shelley
Others Present:	Jim McNulty, Planning and Economic Development Manager Matt Ence, City Attorney Bob Flowers, Police Chief Cody Mitchell, Building Official Dustin Mouritzen, Public Works Director Ryan VonCannon, Parks Director Andrew Parker, Fire Chief Kristelle Hendrickson, Executive Assistant Chris Hart, Ivins City Mayor

1. Call to Order.

Mayor Rick Rosenberg called the meeting to order at 5:00 p.m. and welcomed those present.

2. Opening Ceremony.

A. Pledge of Allegiance: Ben Shakespeare

B. Opening Comments: Pastor Greg Wright, Westside Baptist Church, St. George Interfaith Council.

Pastor Wright thanked Santa Clara City and reported that last November they celebrated their 30th

anniversary and were able to rent the City facilities for a banquet and celebration. It was a great experience.

3. Conflicts and Disclosures.

There were no conflicts or disclosures.

4. Working Agenda.

A. Public Hearing

i. Public Hearing to Receive Public Input Regarding the Adoption of an Annexation Policy Plan.

Planning and Economic Development Manager, Jim McNulty provided an update on what has taken place with the project over the past few months. The intent is to adopt an Annexation Policy Plan for the City. State statute changed in 2021 and requires cities to have an Annexation Policy Plan and Map showing the areas that can be annexed. State Code 10-2-401.5 addresses what is required as part of the statute. The Annexation Policy Plan is intended to comply with the provisions set forth and all criteria required and suggested. The public hearing is an opportunity for affected entities to examine the proposed Annexation Policy Plan and provide input.

The notice for the Annexation Policy Plan was sent to St. George City, the Bureau of Land Management ("BLM"), Ivins City, Washington County, the Washington County Water Conservancy District ("WCWCD"), the Southwest Mosquito Abatement District, the Washington County Special Service District #1, and the Washington County School District. They were identified as the affected entities. Mr. McNulty reviewed the State Code requirements and the process the City has gone through to get to this point.

State Code 10-2-401.5 requires the Planning Commission to hold a public meeting to allow affected entities to examine the proposed Annexation Policy Plan and provide input on it. It also requires the City to accept and consider any additional written comments from affected entities by 10 days after the public meeting. The Planning Commission held a public meeting on December 14, 2023. The minutes from the meeting were included in the packet. Comments were received from Ivins City provided by Ivins City Manager, Dale Coulam. The other affected entities did not provide any comments at that time. The next part of State Code specifies that before holding a public hearing required under subsection 2A6 the City shall, "Make modifications to the proposed Annexation Policy Plan the Planning Commission considers appropriate based on input provided at or within 10 days after the public meeting." City staff and legal counsel reviewed the comments submitted by Ivins City and as a result, made modifications to the proposed Annexation Policy Plan Map. The matter was discussed by the Planning Commission on February 22, 2022. The minutes from that meeting were provided as well. Mr. McNulty explained that that was the first public hearing.

Comments were received from Ivins City and Mr. Coulam attended that meeting as well. The other affected entities did not provide comments. Maps were displayed with one dated December 7,

2023, and the other dated March 27, 2024. Staff had an opportunity to meet with Mr. Coulam and Mayor Hart after the first public meeting, which was held on December 14. On January 17 they met to discuss their comments and items they wanted the City to consider. The first map was presented to the Planning Commission on December 14, 2023, during a public meeting. In the northwest corner, there is a section of property shown in yellow that is the future Hamblin Parkway. Ivins City was concerned with the section of property where a road is shown as going through next to Hwy-91. Ivins was in discussions with the BLM and has plans to construct a city yard there, a city park, and a cemetery. City staff asked to see the plans for what is proposed. Mr. McNulty stated that a roundabout is planned for the area similar to other areas of the City including the new improvements in Ivins City off of Hwy-91.

The next map showed the changes made. It showed Hamblin Parkway and the property in yellow was removed from the map. The proposed design came from Ivins City Engineer, Chuck Gillette. The roadway straddles the section line so that a portion would be in Santa Clara and the other in Ivins City. The areas shown adjacent to the proposed Graveyard Wash Reservoir on the south side of Highway 91 overlap areas that are addressed in the plan itself. The overlapping areas were shown in white. It is County property. Some of the improvements have been completed along Highway 91 in Ivins City and some utility service is available. The area shown in green is in Ivins City and includes properties on the corner of Pioneer Parkway and Highway 91. They were left on the map as overlap because the property owner will decide if they want to develop in Santa Clara or Ivins. It abuts both cities and there are different points of view and interpretations of State Code. The City's interpretation is slightly different than the interpretation Ivins City has for the property.

The process that has been completed to this point to adopt an Annexation Policy Plan included a public meeting before the Planning Commission on December 14, 2023. A public hearing was also held with the Planning Commission on February 22, 2024, where input was taken from Mr. Coulam. They discussed the matter and recommended approval of the Annexation Policy Plan and map as presented.

Tonight, the City Council should hold a second public hearing since the statute and State Code are different with respect to the adoption of an Annexation Policy Plan. Two public hearings are required, with one before the Planning Commission that occurred previously, and another before the City Council.

Mr. McNulty referred to the Annexation Policy Plan and made the following key points:

- The Annexation Policy Plan is a guide to the orderly and well-planned annexation and development of lands contiguous to the City's boundaries. It may be modified from time to time to meet changing needs and to reflect the best interests of the Community.
- An Annexation Policy Plan consists of the following elements:
    - The General Annexation Criteria identified as Item A.
    - A Map of the Proposed Expansion Area.
    - A Procedure for Submission of an Annexation Request was identified as Item B.

DRAFT

- The Petition and Plat Map shall be filed with the City Recorder and all requirements set forth shall be met.
- Item C involves the extension of needed municipal services and developed and developing unincorporated areas and payment.

Mr. McNulty considered Item 6 to be the highlight. It states, "When the Annexation is approved, the newly annexed area shall receive the following services:

a. Fire Protection.
b. Police Protection.
c. Building and Safety.
d. Planning and Zoning.
e. Utilities provided by the City at the time of Annexation.
f. Maintenance of dedicated City public streets; and
g. Other services provided by the City at the time of Annexation.

Once the policy and map are in place, the annexations come directly to the City Council. The City Council can recommend an annexation or allow the annexation to come forward to annex the property. The City Council can also decide not to annex property into the territory. The areas must be shown on a map that can be subject to annexation. In the event an applicant shows property that is not in the current Annexation Map, it could go through an amendment process. As discussed on February 22, 2024, with the Planning Commission, it was recognized that Ivins City may have concerns. Statutory requirements found in the State Code require them to meet with the affected entities, which was done. Staff met with Ivins City representatives who provided comments and changes were made accordingly. The two green parcels remained on the map to give property owners the option to choose where they want to be. This is a signal to the property owners that both cities may have an interest in the property. If there was a discussion as to whether it is going to stay in Ivins City or come to Santa Clara City, that would be decided by the Boundary Commission. Mr. McNulty's experience was that 99% of the time the Boundary Commission sides with the property owner.

Council Member Shakespeare asked why they were not going further south. Mayor Rosenberg explained that what has been put on the maps is the BLM area located around the proposed Graveyard Wash Reservoir and the private property is currently in the County outside of the City. The two white parcels on the south end are private. The owner of the larger one has expressed interest. The property to the west of the white areas on the map is an area that has concerns with the BLM. It is on the other side of the canyon where there is no access or infrastructure. It would be expensive if the BLM decided to release property for development and the developer came to the City and wanted to annex it. In that case, they would modify the Annexation Policy and try to address how to provide services. The intent is to limit it to a degree and pick up potential expansion of the public services around the new reservoir site to facilitate the Hamblin Parkway road alignment that is on the City's Road Master Plan, the Metropolitan Planning Organization ("MPO"), and the STIP. The City is receiving money from the MPO to start environmental studies next year. That was the area of primary concern from the City's standpoint. They are also trying to deal with the existing physical limitations of the Canyon. The Mayor stated that once an area is annexed, the City becomes responsible for Fire and Police protection.

Council Member Waite observed that there are some homes off of Graveyard Wash that have St. George addresses. Mayor Rosenberg explained that the property is owned by Rosenbrook who has requested they be annexed into the City. The other piece is owned by the canal company which has not requested annexation. They would, however, want to annex them into the City because they are adjacent, and it is difficult for the County to provide services there. The County would not allow them to do any type of development and would require them to go through the process of being annexed into the City. The initial phase of the annexation would be the Rosenbrook and Canal parcels. The BLM parcel would follow that up, but no details have been discussed. The other privately owned parcels are the Hafen Family property. It is shown in Ivins' proposed Annexation Policy. It is included in Santa Clara's plan to allow them to determine how it can be accomplished. Ivins City can provide utility services. The area drains into the Santa Clara wash, but the decision will be up to the property owner.

Mayor Rosenberg commented on the reservoir and stated that the power plant is close to the reservoir site. The dam is tall and looms over the top of the power plant. He and the City Staff were concerned that the City had a strong input in the design of the reservoir. He and the Public Works Director, Dustin Mouritsen, serves on the Design Committee and participate in the planning of the reservoir. They work closely with the City of St. George and the Washington County Water Conservancy District ("WCWCD") as well. There will be impacts on residents. He attended a meeting earlier in the day with the Mosquito Abatement District to discuss potential mosquito impacts when the reservoir is built. There has been some concern, particularly in Ivins, where residents have banded together against a similar reservoir in Ivins. He traveled to Las Vegas one week earlier to tour existing reuse reservoirs in Las Vegas Valley to see firsthand the potential impacts. The City has been sensitive to the reservoir construction and does not want it to be a burden. They understand the need for it as an irrigation storage reservoir that will oversee reuse irrigation water in addition to water from the Santa Clara River. It will provide water storage, which is important and can help provide water long term. The desire is to protect the watershed around the reservoir in addition to the corridor for the roadway.

Mayor Rosenberg opened the public hearing.

Mayor Hart reinforced the concerns of Ivins City with the expansion area intruding into part of what is currently Ivins City. He referred to the two parcels on either side of the intersection of Pioneer Parkway and Old Highway 91 on the north side. He stated that there is a different condition there than on the south side where there will be overlapping expansion areas in an area that is not currently a part of either city. This was of concern and potentially a dangerous precedent to set. He asked the City Council to take into account the fact that the improvements on Highway 91 across that section of the proposed expansion area were all improved by Ivins City. The utilities are in place there for Ivins City to provide services to those parcels. He stated that there is a fully developed section of the section that drops down to Rachel Drive where there are a series of storage units and the entrance sign for Ivins City. He was concerned that it is not currently contiguous to Santa Clara City. There is a peninsula of developed Ivins City property that separates the two. He thanked the City Council for its consideration of the P&P Annexation of 80 acres of BLM land on which they will create a substantial regional park, a cemetery, and a new public works yard. They were grateful for the change in alignment that Santa Clara has put in place there.

Mayor Hart reported that they have been hosting "Talk Abouts" on a variety of topics. On Wednesday, April 24 at 7:00 PM in the Rocky Vista University Auditorium, they are hosting one on Public Safety. Santa Clara residents are welcome. The panel will consist of Fire Chief Andrew Parker and some of his staff and Police Chief Bob Flowers and some of his staff. The City Managers were also invited.

There were no further public comments. The public hearing was closed.

B. Consent Agenda.

i. Approval of Claims and Minutes:

- **February 28, 2024, City Council Meeting.**
- **March 6, 2024, Special City Council Meeting.**
- **March 20, 2024, City Council Work Meeting.**
- **Claims through March 27, 2024.**

ii. Calendar of Events:

- **April 10, 2024, Regular City Council Meeting.**
- **April 17, 2024, City Council Work Meeting.**
- **April 24, 2024, Regular City Council Meeting.**

Council Member Hinton moved to APPROVE the Consent Agenda, as presented. Council Member Shakespeare seconded the motion. Vote on motion: Council Member Shakespeare-Yes, Council Member Burton-Yes, Council Member Hinton-Yes, Council Member Pond-Yes, Council Member Waite-Yes. The motion passed unanimously.

Conflicts with the April 17 and 24 meetings were identified. Representation was encouraged at both meetings. Mayor Rosenberg stated that he would be at the Canal Meeting on April 17.

C. General Business.

1. Discussion and Action to Consider Adopting an Annexation Policy Plan. The Plan is intended to Comply with the Provisions of UCA 10-2-401.5(4) and Incorporate all Criteria Required and Suggested by Section 10-2-402.5(3). This opportunity will allow for affected entities to examine the proposed Annexation Policy Plan and Provide input on it and Approve Ordinance 2024-24. Presented by Planning and Economic Development Manager, Jim McNulty.

Mayor Rosenberg stated that the Ivins City policy covers most of the Black Desert, all of Acadia, and several areas that are part of Santa Clara City. He was in favor of including the Pioneer Parkway parcels and was assured that Ivins was modifying their map, but he had not yet seen any

map. What is proposed gives flexibility for a property owner to decide. If there is a dispute between the cities, it would go to the Boundary Commission.

Council Member Pond reported that he attended the Planning Commission Meeting when the matter was first presented. He has done research as well. On the south section that Mayor Hart is concerned about, there is a precedent for a narrow easement that could tie that into Rachel Drive. He reported that Chicago O'Hare Airport is 14 miles outside the City of Chicago, but they have a 200-foot-wide easement that ties it into the City of Chicago. Similarly, the Port of Los Angeles is not really in the City of Los Angeles, but they have used easements to make it officially part of Los Angeles County. He liked the plan and if the property owner on the south parcel wanted to be part of Santa Clara it makes sense that they could come up with an easement that would tie into Santa Clara City.

Council Member Shakespeare agreed that it makes sense and gives landowners the flexibility to make those decisions. Both cities work well together. He noted that the reservoir affects Santa Clara citizens and having input on how it is developed is important.

In response to a question raised by Council Member Burton, Mayor Rosenberg stated that what is proposed brings the Western Corridor into the City of Santa Clara from Washington County. The City will control land use that is adjacent to it. He explained that it is all public land. Everything that happens on the Western Corridor would come through the City Council if it were annexed in. The BLM has historically not opposed annexations, but the City would assume the additional responsibility to provide services.

City Attorney, Matt Ence verified that the City can provide Fire and Public Safety services if annexed in. He informed the City Council that the State Code tasks the City with attempting to avoid overlaps between its plan and the plans of other municipalities. If there is an overlap, the City's responsibility is to meet and confer with the other municipality, which has been done. They were, however, not able to resolve the issue. Mayor Hart was most concerned about the two green parcels on the map. With respect to the white parcels on the opposite side of Highway 91, Mayor Hart agreed to disagree. He believed the City had satisfied its minimum obligation under the Code to attempt to resolve it. There is no consequence outlined in the Code if they are not able to resolve it and he was comfortable moving forward with the plan. Mr. Ence commented that it is not known what it will look like in the future. If one of the property owners tries to annex into Santa Clara, he would expect there to be opposition potentially from Ivins City. They would then be faced with dealing with the Boundary Commission who would make the final decision.

Council Member Pond reported that he spoke to residents and most thought that the green parcels were already part of Santa Clara. He asked how the addressing would work if the two parcels were annexed into Santa Clara since the storage units have an Ivins address. Possible options were discussed. Mr. McNulty supported the idea of a developer approaching the City with a desire to work to create a gateway into the community. Currently, the gateway into the City is storage units. Mayor Rosenberg appreciated Ivins City allowing a "Welcome to Santa Clara" sign to be placed within Ivins City limits. Sewer issues between the two cities were discussed.

DRAFT

Council Member Shakespeare moved to APPROVE the Annexation Policy Plan and Ordinance 2024-04, as presented. Council Member Burton seconded the motion. Vote on motion: Council Member Shakespeare-Yes, Council Member Burton-Yes, Council Member Hinton-Yes, Council Member Pond-Yes, Council Member Waite-Yes. The motion passed unanimously.

2. Discussion and Action to Consider Approving the Purchase of a Bison Statue from Utah Tech University and Approve Resolution 2024-04. Presented by Jim McNulty, Planning and Economic Development Manager.

Mr. McNulty reported that the above item was a continuation of the discussion that took place at the last meeting with Jordan Sharp from Utah Tech University. A decision was needed from the City Council on whether to move forward with the purchase of the Bison statue for the City. This would be done with $5,500 in this year's budget. The remaining $5,500 would be paid with next year's budget. It is a money item, so it was brought back to the City Council for a decision.

Council Member Burton was contacted by residents who were opposed to it, which surprised her. They suggested that the City Council wait until after the budget is finalized.

Council Member Shakespeare thought it was good for the City to show support for the University. From a budget perspective, he liked how it was broken up. His question had to do with the artist and the look of the finished product. He liked the fact that it would be visible when entering the City.

Mr. McNulty stated that in previous conversations with Mr. Sharp, there are only two available. Two dozen are in Saint George City and Washington City has two. There is nothing on this side of the valley. Mr. Sharp considers this a unique opportunity for Santa Clara to partner with Utah Tech.

Council Member Hinton supported the opportunity to participate and bring artwork into the City. It will bring the community together if they form a committee that will choose the artist and artwork that will appear on the piece. She expressed her support. It was confirmed that the purchase will be eligible to use Recreation, Arts, and Parks ("RAP") tax funds. The Mayor confirmed that the cost will not come out of the General Fund.

Council Member Waite moved to APPROVE the purchase of the Bison Statue from Utah Tech University and Resolution 2024-04. Council Member Hinton seconded the motion. Vote on motion: Council Member Shakespeare-Yes, Council Member Burton-Yes, Council Member Hinton-Yes, Council Member Pond-Yes, Council Member Waite-Yes. The motion passed unanimously.

DRAFT

5. Reports.

A. Mayor/Council Reports.

Council Member Shakespeare reported on the following:

- He gave the welcome for the second half of the True Grit event that took place the previous Saturday. There was a good turnout and improved weather. Mayor Rosenberg stated that they had to change the course the morning of the race because a vehicle was stuck in the middle of the racecourse. Participants started in the opposite direction but completed the second lap as laid out. There was representation from all over the world.
- He attended the last few Heritage Committee Meetings where a lot of work is being done. He acknowledged Mr. McNulty's efforts and stated that he was putting in long hours. The group is efficient, and members are taking on various assignments.
- Flood Control will be addressed next week. There have been meetings with Ivins City and one to discuss the Fire Budget. They have a good budget and policy for this year. One more issue will come to the City Council to discuss. He thanked staff for their input.

Council Member Burton reported on the following:

- Her son who is fighting in Ukraine, recently celebrated his birthday. She heard from him earlier in the day and was pleased to learn that he was well and alive.
- She has attended a few Heritage Committee Meetings, which have been insightful. She recognized that Mr. McNulty had invested a lot of time and effort. The committee has some great ideas.
- Several Council Members had an opportunity to travel to Washington, DC where there were good classes. They met other city council members and there was good comradery. She met Laura TeKrony from the City of Leesburg, and they were considering becoming sister cities.
- She has been working with Sherry Anderson on the Fair and has tried to contact the person who does art at the middle school to do a seed display. The display is downstairs and has never been filled in with seeds. They have also discussed other great displays that can be done at the Fair.
- Council Member Burton has been working with Monica on the Pageant but the meetings between the Fair and the Pageant have conflicted, which has been difficult. Mayor Rosenberg distributed a VIP pass to the Fair to Council Member Burton and indicated that there is only one City representative.

Council Member Hinton reported on the following:

- She also reported on the National League of Cities ("NLC") conference that took place in Washington, DC. They had an enjoyable time, and it was a wonderful opportunity to connect with leaders from other cities. They met briefly with the Utah delegation and spent time with Congresswoman Malloy. They asked her about

DRAFT

transportation and infrastructure, the Northern and Western Corridors, housing, the potential for access to BLM Land, Utah's water rights and the Colorado River, energy sources, coal plants, and nuclear power plants. Council Member Hinton planned to follow up and get more information. She reported that Mayor Ramsey from South Jordan presented interesting information about air quality and environmental regulations in Utah. It was noted that the Environmental Protection Agency ("EPA") changed the regulations. Council Member Hinton stated that Congresswoman Malloy was urging the City's delegation to work on that as well since we will never be able to meet the regulations. She thanked Lance for coordinating the event.

- Council Member Hinton asked Representative Malloy about the Community Project funding. She reached out to the Utah Director and was of the understanding that the deadline is in April. They would not be able to do anything this year but could potentially next year. She agreed to see what is available.
- She attended the ThrIVe Drip Spa grand opening the previous Monday. She met with the owner who was excited to have them there. Council Member Hinton welcomed them to Santa Clara.
- Executive Assistant, Kristelle Hendrickson was commended for the excellent work she is doing on social media. Council Member Hinton had also received positive feedback from other cities on the City's social media.
- Council Member Hinton watched the recent 20/20 special and thanked Mr. Ence for bringing it to the attention of the Council. She commended the City's Police Officers and Emergency Medical Services ("EMS") personnel who did a great job. She was pleased to see how professional they were.

Council Member Pond reported on the following:

- He participated in the NLC conference as well. It was a great experience and great to interact with representatives from St. George City, the Utah League of Cities and Towns ("ULCT"), and others. He attended various sessions that unfortunately were geared more toward larger cities and problems that Santa Clara is not faced with. Justserve.org had a booth and he was able to visit with them. They are trying to get 100 cities signed up by the end of the year to provide service opportunities. They provided him with information about setting up a Youth Club. It sounded like a great opportunity.
- On March 1 Council Member Pond visited the solid waste facility where there was a Groundbreaking Ceremony. They are Phase 2 but are doing the groundbreaking for a new administrative building and way station to make traffic more efficient coming into the dump.

Council Member Waite reported on the following:

- He also traveled to Washington, DC. The highlight for him was being able to go out to dinner with Congresswoman Malloy and her Chief of Staff. They were able to ask her questions for 1 ½ hours. She had a good answer for everything and was very insightful.

- He attended the Washington County Youth Coalition Dinner the previous Monday. They expressed a need for more support from individual cities. It sounded like there would be a spot on the board for any Council Member who is willing to help out. Their focus is drug prevention and leadership among the high school population.
- Council Member Pond attended a Communication Channel ("CC") meeting earlier in the week. Things are moving forward in terms of taking care of staff. He reported that they will be closing down the CC channel and will need to amend the Interlocal Agreement or enter into a Separation Agreement of some sort. In the meantime, the CC is running as normal. They reviewed the budget as well. The request for each city to pay into it will remain flat even though population numbers have changed and it will remain the same as last year.
- He and the Mayor attended a meeting on the Orchard at Tobler Park. The current plan is to change the alignment to where the road will be and construct a retaining wall in the correct location. That is the first step. They plan to order some bare root trees next spring. He stated that the order needs to be placed fairly soon. They also plan to walk the orchard and get an idea of how many trees are needed. Mayor Rosenberg stated that they are looking at a downsized Master Plan at Tobler Park. They will work on the north half first and complete a portion of the orchard and the garden followed by the road grading, building some of the tiers and some of the main infrastructure before ordering the trees. He reported that it takes about one year for the trees to arrive. That will be followed by a second phase that could include an arbor, restrooms, and gravel paths. The south half and amenities can be saved for a future phase when funds are available. Council Member Waite was open to specific tree suggestions.
- Council Member Waite received a question from Brooke Seeley from the BMX track who had problems with people drinking alcohol inside the track last year. She plans to post signs but wanted to know what the rule is with respect to open containers in the park. It was reported that the signs in the park say, "No Smoking or Alcohol allowed in the Parks." It was suggested that the sign reference City Code.

Mayor Rosenberg reported on the following:

- The City got word from the Water District that they will help fund 50% of the cost of the weather track controllers in the parks and provide the MyMeter software. They are looking at possibly helping with the Crestview irrigation line in the future. Construction should have begun on Crestview. The irrigation line will be installed from the park to the elementary school along Crestview. It will allow the City to convert the outdoor irrigation at the elementary school from culinary to irrigation water. The canal company will provide the water and meter it. The City does not have enough water to do it. He was pleased to have participation from the district and the issue was high on his list of priorities. The Mayor stated that Santa Clara was the first community to send them a surcharge. The canal company was hesitant to fund any of the City's projects but ultimately agreed to fund 50% of the first two.
- The Mayor met with Black Desert in a monthly coordination meeting where they discussed the South Village Project and Red Mountain Drive. The signal is

currently under design and the power poles will soon have new foundations poured. There has been a lot of movement there. The most significant issues discussed at the meeting were the Professional Golf Association ("PGA") and Ladies Professional Golf Association ("LPGA") special events and how they plan to facilitate them. They are working on a Conditional Use Application for site activities that are currently underway such as rock quarry work and a tree orchard. The intent is to bring them up to date on their permits and issue Special Event Permits for both events. The Mayor was informed that they have a group that is coordinating with the City's public safety. This is a huge event that will have a significant impact on the City's Fire, EMS, and Police.

- Chief Flowers stated that they met with them a few times. He was concerned about Pioneer Parkway and some of the plans and parking issues. They discussed the situation and were encouraged by what he heard. He informed them that the City's costs will double because his opinion was that they undercharge. He has looked at other agencies and got an idea of what they will need traffic-wise, not including EMS or Fire. He stated that they will have to go outside their agency. The Police Department's focus will be on traffic and other calls that come in. It will be challenging to get in and out near Harmons specifically. They have some thoughts on that. Chief Flowers informed them that they will likely need 24-hour coverage at a cost of $100 per hour per officer, which will cover all of their costs. He expected to provide more information in the coming weeks and to have something formal in mid-April. Recommendations were made for off-site parking such as at the old airport. They also discussed property in the Shivwits Area where there is some asphalt as well as the Fire Lake parking that could be made available. The issue was the shuttle situation. He had been impressed with what they had been told. Once something formal is submitted he will present the cost and other information to the City Council.
- Fire Chief, Andrew Parker, reported that he and Building Official, Con Fulde met with John Kubal and discussed their Incident Action Plan from previous events for EMS coverage. They will follow State guidelines and make sure they are adequately staffed. He expected to need two ambulances and e-bikes. There was also discussion about working with the area Medical Directors and having a physician on-site. His understanding is that the event will run from Monday to Sunday with a spike on Friday and Saturday. 8,000 people were expected. They want it to be a good experience. There is an issue with the lava and people being able to move about freely. Mr. Kubal indicated that they will limit the number of tickets to prevent a huge crowd for which services cannot be provided. In terms of Fire, they plan to use part of the building for cooking. There will be canvas tents on the exterior that will have to be fire-rated. The previous week he attended a Technical Review Committee ("TRC") meeting with Mr. Fulde in Ivins. They will continue to coordinate going forward.
- Mayor Rosenberg was concerned about the Transportation Plan and how they will route people in. They indicated that they would use shuttle buses to transport people from the parking lot and other areas. He was concerned because there are only two accesses to the site on the Santa Clara side. He was trying to get the bus route to access via Rachel Drive. They have talked about on-site parking on what was the

DRAFT

old Regal Home site that is within the Black Desert Project across the wash from Desert Village south of Solis. They are coming back with a lot more details. They meet every third Thursday at 10:30 AM.

- Council Member Shakespeare asked if the light will be installed in time for the event. Mayor Rosenberg was unsure. Council Member Shakespeare asked about County reimbursement from TRT because of the event. Mayor Rosenberg stated that for that reason he wants to know the costs. The County has promised to help.
- There have been questions regarding the Silverado commercial property. He asked the City Council their thoughts on the PD Commercial Ordinance. There is a loophole with regard to residential uses that they should consider closing. He asked Mr. Ence to prepare a temporary ordinance to limit new applications on the PDC until they have time to rework the ordinance and address the residential uses inside the ordinance. The City Council expressed support.
- There has been discussion about short-term rentals and opening them up Citywide. The Mayor stated that there are pros and cons.
- The Mayor reported on a meeting held earlier in the day with the County Commission and Hurricane Valley Fire. Representative Elison was present and indicated that the bill that did not come out of the Senate Committee during the last session has a very high chance of approval next session. He was very optimistic that it will provide additional EMT funding for cities that provide the EMT and fire services. There is going to be a special session. If they can get the Governor to add this, they may try and run it during the Special Session. Hurricane Valley Fire has some extreme financial difficulties and is not getting that funding. As a result, they are pushing for assistance from the County. He appreciated being invited to the meeting to hear some of the discussion from the County and what they can and cannot do and fund. They may be looking at a property tax increase in Hurricane Valley Fire District of around 35% to cover fire service fees.
- It was reported that the budget will be discussed at the April 17 meeting. He commented that the committee and staff have done a good job.
- The Flood Control TAC met earlier in the day. No meeting was scheduled for the following week with the EC as there is nothing on the agenda.
- Mayor Rosenberg commended Chiefs Flowers and Parker for the professionalism of the Fire and Police Departments. Chief Parker commended Mr. Ence for providing legal guidance on the issues he had to respond to. It was very reassuring to their staff to have that direction. Mr. Ence was honored and excited for the first responders to receive attention for the work they do.

Police Chief, Bob Flowers reported on the following:

- With the Black Desert event, he stated that they can do what is required as long as they get the plan early enough. He expected it to require more than the Police and some Public Works and Parks personnel support.
- With regard to alcohol in the parks, they noticed that after the game, it becomes a tailgate situation. It is not a problem, but law enforcement needs to get there early. He was not concerned with youth but primarily with adult softball tournaments.

They need to have people who are willing to talk about what they see and there must be witnesses.

- Chief Flowers referred to the 20/20 broadcast and stated that they are flooded with requests.
- He was surprised by how many people show up to the "Talk Abouts." He planned to prepare a presentation and represent both cities. Chief Flowers offered to send his presentation to Messrs. Jacobsen and Coulam and welcomed feedback. His presentation has to do with why they are together, their history, and why they are better together. He thought it would be beneficial to have at least one City Council Member present. Mayor Rosenberg asked that the April 24 City Council Meeting be short so that they can be done in time to attend the "Talk About".

Planning and Economic Development Manager, Jim McNulty reported on the following:

- The draft of the Design Guidelines will be shared with the Historic District Committee on Tuesday night. Afterward, it will be sent to others. A public hearing is not required but the expectation was that members of the public will want to share. The initial thought was to have the public hearing on April 24 since May 8 might be too late to make changes. The intent was to adopt that night. At the work meeting on April 17, they could allow public comment.

6. Executive Session.

Council Member Hinton moved to go into EXECUTIVE SESSION to discuss potential litigation. Council Member Waite seconded the motion. The motion passed with the unanimous consent of the Council.

The City Council was in Executive Session from 6:34 PM to 6:49 PM.

7. Adjournment.

Council Member Waite moved to ADJOURN. Council Member Pond seconded the motion. The motion passed with the unanimous consent of the Council.

The City Council Meeting adjourned at 6:49 PM.

_____
Chris Shelley
City Recorder

Approved: _____

DRAFT

City of Santa Clara
Check Register
All Bank Accounts - 03/25/2024 to 03/25/2024

Payee Name	Reference Number	Invoice Number	Invoice Ledger Date	Payment Date	Amount	Description	Ledger Account	Activity Code
CHILD SUPPORT SERVICES	71137	032024-873789	03/20/2024	03/25/2024	206.77	CASEY-C000873789 PAY PERIOD END 3/20/24	102595-000 - GARNISMENTS PAYABL	
					$206.77			
FRANCOTYP-POSTALIA, INC. DBA	ACH032524	36180397	03/25/2024	03/25/2024	129.00	POSTAGE METER LEASE	104130-825 - LEASE PAYMENTS	
					$129.00			
GLOBE LIFE LIBERTY NATIONAL	ACH032524	032524-LIFE INS.	03/25/2024	03/25/2024	618.96	LIFE INSURANCE	102252-000 - LIFE-AD&D PAYABLE	
					$618.96			
					$954.73			

City of Santa Clara
Check Register
All Bank Accounts - 03/28/2024 to 03/28/2024

Payee Name	Reference Number	Invoice Number	Invoice Ledger Date	Payment Date	Amount	Description	Ledger Account	Activity Code
CAMPBELL, KRISTEN	71138	032524- SWD DR	03/25/2024	03/28/2024	201.76	SWISS DAYS PAGEANT DRESS	104610-223 - MISS SANTA CLARA PA	
CAMPBELL, KRISTEN	71138	032524-SWD FL	03/25/2024	03/28/2024	13.34	2023 SWISS DAYS FLOATSUPPLIES	104610-215 - PARADE	
CAMPBELL, KRISTEN	71138	032524-SWD PA	03/25/2024	03/28/2024	35.86	SWISS DAYS PAGEANT WIDE LEG PANT	104610-223 - MISS SANTA CLARA PA	
					$250.96			
					$250.96			
CANNON TECHNOLOGIES INC.	71139	951985412	03/27/2024	03/28/2024	280.00	CL200 METER REPAIRS	535310-252 - METERS	
					$280.00			
CARELON, SUBROGATION	71140	032624-REFUND	03/26/2024	03/28/2024	747.75	FILE#130739697 REFUND	103426-000 - AMBULANCE SERVICE	
					$747.75			
DOMINION ENERGY	ACH032824	032824-GUBLER	03/28/2024	03/28/2024	219.24	GUBLER NEW RESTROOM-3789794987	104510-270 - UTILITIES	
DOMINION ENERGY	ACH032824	032824-GUBLER	03/28/2024	03/28/2024	91.99	GUBLER PARK - 6922398938	104510-270 - UTILITIES	
DOMINION ENERGY	ACH032824	032824-RACHEL	03/28/2024	03/28/2024	309.68	FIRE STATION RACHEL - 3929140000	104230-775 - STATIONS OPERATION	
DOMINION ENERGY	ACH032824	032824-SC CIRC	03/28/2024	03/28/2024	141.97	FIRE STATION CIRCLE-5978120000	104230-775 - STATIONS OPERATION	
					$762.88			
					$762.88			
IPSA	71141	3370	03/17/2024	03/28/2024	500.00	1ST YR. STEP TEST FOR ANGEL & JOURNEYMA	535310-360 - TRAINING	
IPSA	71141	3406	03/17/2024	03/28/2024	52.00	IPSA BANQUET DINNER	535310-230 - TRAVEL	
					$552.00			
					$552.00			
SEAWESTERN	71142	INV29490	03/20/2024	03/28/2024	2,280.38	BALANCE FORWARD	104230-500 - FIRE SUPPRESSION	
					$2,280.38			
SPECIALIZED COMMUNICATION S	71143	6-1185	02/27/2024	03/28/2024	22,060.00	CANYON VIEW DRIVE BORE JOB	535310-730 - IMPROVEMENTS	
					$22,060.00			
SUNRISE ENGINEERING, INC.	71144	0140929	02/14/2024	03/28/2024	120.00	SC CITY ENGINEER BLACK DESERT/SOUTH VIL	104240-320 - ENGINEERING	
SUNRISE ENGINEERING, INC.	71144	0140930	02/14/2024	03/28/2024	655.00	SC ENGINEER PIONEER POINTE PH 1a & 1b	104240-320 - ENGINEERING	
SUNRISE ENGINEERING, INC.	71144	0140931	02/14/2024	03/28/2024	525.00	SC ENGINEER HERITAGE POINT COMM.	104240-320 - ENGINEERING	
SUNRISE ENGINEERING, INC.	71144	0141406	03/12/2024	03/28/2024	108.00	SC MISC ON CALL ENGINEERING	545410-320 - ENGINEERING SERVIC	
SUNRISE ENGINEERING, INC.	71144	0141478	03/13/2024	03/28/2024	2,730.00	SC STORM WATER MASTER PLAN UPDATE INC.	545410-320 - ENGINEERING SERVIC	
SUNRISE ENGINEERING, INC.	71144	0141488	03/13/2024	03/28/2024	13,776.00	SC CITY WATER RIGHTS 2023	515110-370 - PROFESSIONAL SERVI	
SUNRISE ENGINEERING, INC.	71144	0141494	03/13/2024	03/28/2024	2,732.00	SC PARKS & TRAILS MASTER PLAN, IFFP & IFA	484200-320 - ENGINEERING SERVIC	
SUNRISE ENGINEERING, INC.	71144	0141799	03/26/2024	03/28/2024	875.00	SC CITY ENGINEER QUAIL CROSSING & COYOT	104240-320 - ENGINEERING	
SUNRISE ENGINEERING, INC.	71144	0141800	03/26/2024	03/28/2024	109.50	SC CITY ENGINEER BLACK DESERT/SOUTH VIL	104240-320 - ENGINEERING	
SUNRISE ENGINEERING, INC.	71144	0141801	03/26/2024	03/28/2024	180.00	SC CITY ENGINEER DESERTS EDGE	104240-320 - ENGINEERING	
SUNRISE ENGINEERING, INC.	71144	0141802	03/26/2024	03/28/2024	120.00	SC ENGINEER HERITAGE POINT COMM.	104240-320 - ENGINEERING	
					$21,930.50			
					$21,930.50			
UPPER CASE PRINTING INK.	71145	1583	03/25/2024	03/28/2024	222.95	BACK OF BILL PRINTING	104130-370 - PROFESSIONAL SERVI	
					$222.95			
UTILITY FINANCIAL SOLUTIONS, L	71146	23057UFS	03/25/2024	03/28/2024	2,765.00	PROFESSIONAL SERVICES-ELECTRIC RATE UP	535310-370 - PROFESSIONAL SERVI	
					$2,765.00			
WASHINGTON COUNTY SOLID WA	71147	158624	02/29/2024	03/28/2024	13,578.60	2999 UNITS-GARBAGE @ 13.15 & 2226 BLUCAN	103445-000 - RECYCLING CHARGE	
WASHINGTON COUNTY SOLID WA	71147	158624	02/29/2024	03/28/2024	39,436.85	2999 UNITS-GARBAGE @ 13.15 & 2226 BLUCAN	104430-311 - SOLID WASTE DISPOS	
					$53,015.45			
					$53,015.45			

City of Santa Clara
Check Register
All Bank Accounts - 03/28/2024 to 03/28/2024

Payee Name	Reference Number	Invoice Number	Invoice Ledger Date	Payment Date	Amount	Description	Ledger Account	Activity Code
WESTERN UNITED ELECTRIC SU	71148	6110698	03/27/2024	03/28/2024	490.76	200 AMP INSULATED CAPS FOR STOCK	535310-466 - POWER LINES/POLES/	
					$490.76			
WHITAKER CONSTRUCTION CO.	71149	37548	03/12/2024	03/28/2024	100,000.00	SANTA CLARA POND EXCAVATION	545410-730 - IMPROVEMENTS	3
					$100,000.00			
XTREME GRAPHIX	71150	40793	10/16/2023	03/28/2024	1,118.98	UNIFORMS	104230-135 - UNIFORMS	
					$1,118.98			
YOUNG, DONALD & DIANE	71151	Refund: 810402	03/27/2024	03/28/2024	318.01	Refund: 810402 - YOUNG, DONALD & DIANE	531311-000 - ACCOUNTS RECEIVABL	
					$318.01			
					$206,795.62			

Mayor
Rick Rosenberg

City Manager
Brock Jacobsen

CITY OF
SANTA CLARA
FOUNDED 1854

City Council
Jarett Waite
Ben Shakespeare
Christa Hinton
Janene Burton
Dave Pond

CITY COUNCIL

Meeting Date: 10/Apr/24 **Agenda Item:** 1

Applicant: Jon Ence **Requested by:** Jim McNulty

Subject: Partial Plat

Amendment

Description:

Jon Ence is requesting to amend the Snow Canyon Estates Subdivision. The applicant is proposing to amend Lot 1 and Lot 3. Lot 1 is currently 10,191 sq. ft. and will be decreased to 10,000 sq. ft. (0.23 acres). Lot 3 is currently 26,161 sq. ft. and will be increased to 26,352 sq. ft. (0.60 acres). Both lots have existing single-family homes on them. Mr. Ence is proposing to build a detached garage in the rear yard of his property.

Recommendation:
Approval **Cost:** N/A

Legal Approval: N/A

Finance Approval: N/A

Budget Approval: N/A

Attachments:
N/A

City of Santa Clara
2603 Santa Clara Drive
(435) 656-4690, Ext. 225
jmcnulty@sccity.org

Staff Report

Subdivision Plat Amendment
Summary and Recommendation

Public Body: Santa Clara City Council
Meeting Date: April 10, 2024
Current Zone: R-1-10
Property Address: 1784 Lava Cove Drive (Lot 1), and 2536 Stefanie Drive (Lot 3)
Request: Partial Plat Amendment for Lot 1 and Lot 3 of the Snow Canyon Estates Subdivision
Applicant Name: Jon Ence
Staff Planner: Jim McNulty
City Staff Recommendation: Approve with conditions
Meeting Type: Public Meeting

PROJECT DESCRIPTION

The applicant, ***Jon Ence, is requesting to amend the Snow Canyon Estates Subdivision.*** The applicant is proposing to amend Lot 1 and Lot 3. Lot 1 is currently 10,191 sq. ft. and will be decreased to 10,000 sq. ft. (0.23 acres). Lot 3 is currently 26,161 sq. ft. and will be increased to 26,352 sq. ft. (0.60 acres). Both lots have existing single-family homes on them.

Both amended lots will meet the area, width, and yard regulations as per Section 17.64.050 of city ordinance. Jon Ence is the owner of the home on Lot 3. Mr. Ence is proposing to build a detached garage in the rear yard of his property. The proposed partial plat amendment will allow for a total of 191 sq. ft. to be included within Lot 3 on a recorded subdivision plat.

SITE & VICINITY DESCRIPTION

The subject properties are in the northeastern part of the city on Lava Cove Drive and Stephanie Lane. Major cross streets in the vicinity include Lava Cove Drive and Pioneer Parkway.

ISSUES OF CONCERN/PROPOSED MITIGATION

No issues of concern have been identified for this application.

Request: Partial Plat Amendment

NEIGHBORHOOD RESPONSE

Notices were sent to the property owners within the Snow Canyon Estates Subdivision. No responses have been received by city staff as of the writing of this report. The property has also been posted for a public meeting as per State Code requirements.

REVIEWING DEPARTMENTS

DEPARTMENT: *Building*
Recommendations: A geotechnical report will be required for Lot 1 and Lot 3 if any additional structures are proposed in the future.
Required Revisions: None at this time.

DEPARTMENT: *Parks & Recreation*
Recommendations: N/A
Required Revisions: N/A

DEPARTMENT: *Police & Fire*
Recommendations: N/A
Required Revisions: N/A

DEPARTMENT: *Power*
Recommendations: Public Utility Easements (PUE's) are required to be shown on the final plat.
Required Revisions: None at this time.

DEPARTMENT: *Public Works*
Recommendations: Any public utility easement that's affected by this amendment needs to be relocated. A final mylar with signature blocks is required.
Required Revisions: None at this time.

STATE CODE CONSIDERATIONS

Utah Code, Section 10-9a-207 includes requirements for subdivision amendments. To amend a subdivision, a city must hold at least one public meeting (not public hearing). Additionally, a public meeting to consider an amendment to a subdivision requires 10 days' notice rather than 24 hours' notice. A notice must also be sent to property owners in the subdivision, with a notice in a visible location, with a sign of sufficient size and durability. Planning Staff has determined that all State Code requirements have been met with this application.

CITY STAFF RECOMMENDATION

On March 28, 2024, the Planning Commission held a public meeting and forwarded a recommendation of approval to the City C toouncil. City staff recommends that the City Council consider granting approval of the Partial Plat Amendment for Lot 1 and Lot 3 of the Snow Canyon Estates Subdivision, subject to the following conditions:

1. That the applicant be required to comply with the recommendations from all city reviewing departments.

2. That both lots (Lots 1 & 3) meet the area, width, and yard regulations as per Section 17.64.050 of city ordinance.
3. That the Owner's Dedication & Acknowledgement be signed prior to final plat recordation.
4. That the applicant be required to record the amended subdivision plat and provide an electronic copy to city staff.

GENERAL NOTES

1. A GEOTECHNICAL INVESTIGATION WAS PERFORMED BY APPLIED GEOTECHNICAL ENGINEERING CONSULTANTS, INC. THE INVESTIGATION RESULTS AND SPECIFIC RECOMMENDATIONS FOR THE CONSTRUCTION OF FOUNDATIONS, FLOOR SLABS, AND FLAT WORK ARE COMPILED IN A REPORT DATED SEPTEMBER 15, 2015. THIS REPORT IS AVAILABLE FROM THE DEVELOPER AND A COPY IS ON FILE WITH THE CITY OF SANTA CLARA. OWNERS, BUILDERS AND CONTRACTORS SHOULD BECOME FAMILIAR WITH THIS REPORT AND COMPLY WITH ITS RECOMMENDATIONS.

2. ALL LOTS ARE SUBJECT TO A 14.00 FOOT PUBLIC UTILITY AND DRAINAGE EASEMENT ALONG ALL STREET SIDE PROPERTY LINES UNLESS OTHERWISE NOTED.

3. ALL LOTS IN THIS SUBDIVISION ARE SUBJECT TO BUILDING SETBACKS AS FOLLOWS: 25.00 FEET ALONG ALL PUBLIC STREETS, 8.00 AND 12.00 FEET ON ALL INTERIOR SIDE YARDS, AND 10.00 FEET ON REAR YARDS UNLESS OTHERWISE NOTED.

4. THE BASIS OF BEARING FOR THIS PLAT IS N 89°24'41" W BETWEEN THE NORTH 1/4 CORNER AND THE NORTHWEST CORNER OF SECTION 15, TOWNSHIP 42 SOUTH, RANGE 16 WEST, SALT LAKE BASE AND MERIDIAN.

5. NOT WITHSTANDING THE POSTING OF BOND FOR INSTALLATION OF OFF-SITE IMPROVEMENTS, NO BUILDING PERMIT WILL BE ISSUED FOR ANY LOT IN THIS SUBDIVISION UNTIL ALL UTILITIES ARE FULLY INSTALLED IN THE ENTIRE SUBDIVISION.

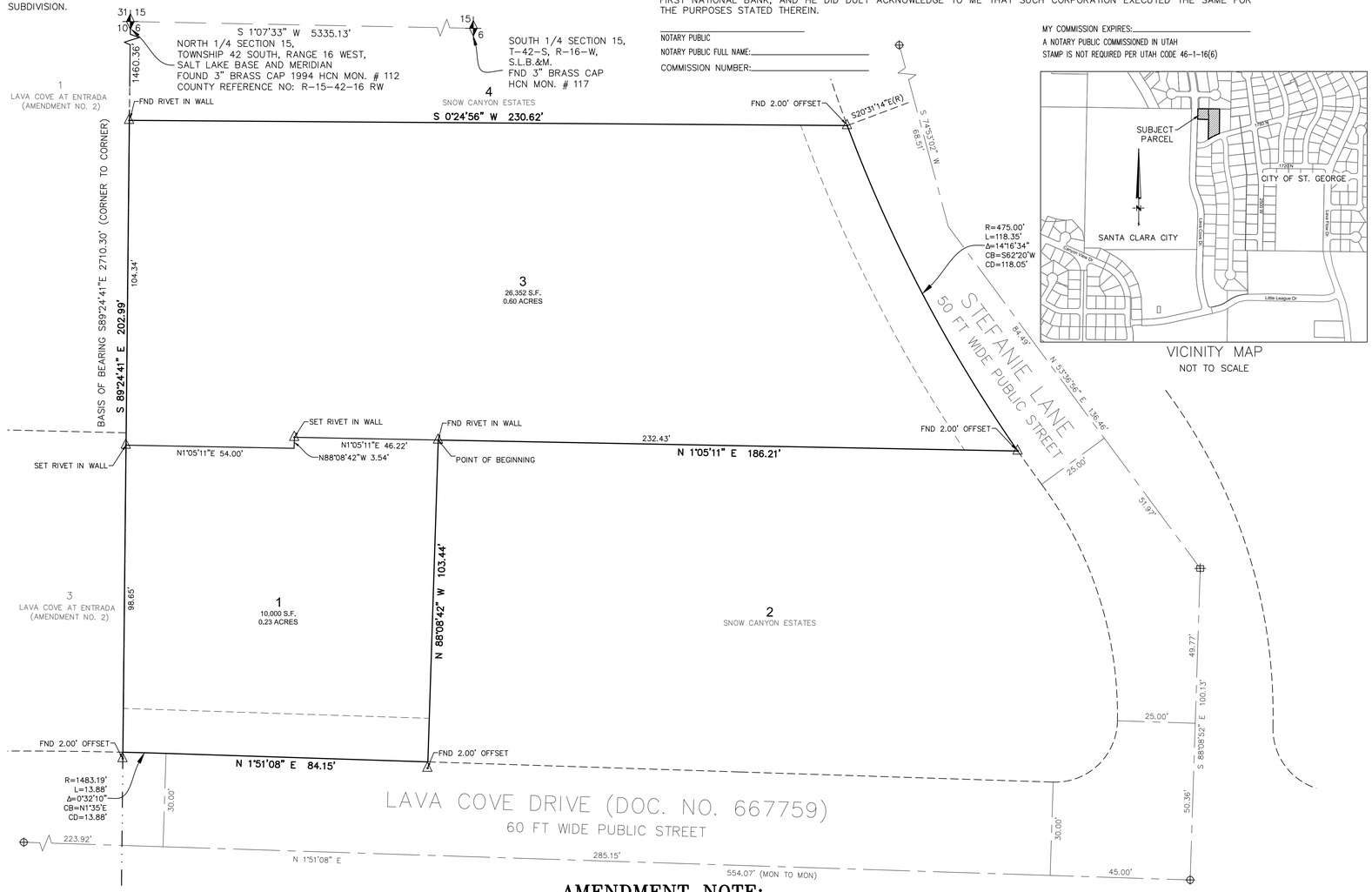

MORTGAGEE'S CONSENT TO RECORD

ZIONS BANCORPORATION, N.A. DBA ZIONS FIRST NATIONAL BANK, A MORTGAGEE OF SAID TRACK OF LAND DOES HEREBY GIVE CONSENT FOR SAID TRACT OF LAND TO BE USED FOR THE USES AND PURPOSES DESCRIBED IN THE PLAT, TO RECORDING PLAT, RECORDING OF COVENANTS, CONDITIONS AND RESTRICTIONS AND JOINS IN ALL DEDICATIONS AND CONVEYANCES.

MANAGER: _____

MORTGAGEE ACKNOWLEDGMENT

STATE OF _____ }
COUNTY OF _____ } S.S.

ON THE ____ DAY OF _____ 20___, PERSONALLY APPEARED BEFORE ME, _____ WHO BEING BY ME DULY SWORN DID SAY THAT HE IS THE MANAGER OF ZIONS BANCORPORATION, N.A. DBA ZIONS FIRST NATIONAL BANK, AND THAT HE EXECUTED THE FOREGOING DOCUMENT ON BEHALF OF SAID CORPORATION, BEING AUTHORIZED AND EMPOWERED TO DO SO BY THE OPERATING AGREEMENT OF ZIONS BANCORPORATION, N.A. DBA ZIONS FIRST NATIONAL BANK, AND HE DID DULY ACKNOWLEDGE TO ME THAT SUCH CORPORATION EXECUTED THE SAME FOR THE PURPOSES STATED THEREIN.

NOTARY PUBLIC

NOTARY PUBLIC FULL NAME:_____

COMMISSION NUMBER:_____

MY COMMISSION EXPIRES:_____

A NOTARY PUBLIC COMMISSIONED IN UTAH

STAMP IS NOT REQUIRED PER UTAH CODE 46-1-16(6)

VICINITY MAP

NOT TO SCALE

AMENDMENT NOTE:

THE PURPOSE OF AMENDING LOTS 1 & 3, SNOW CANYON ESTATES SUBDIVISION, RECORDED AND ON FILE AT WASHINGTON COUNTY RECORDERS OFFICE AS DOCUMENT NUMBER 20160040060 IS TO ADJUST A PORTION OF THE SHARED LOT LINE BETWEEN LOTS 1 & 3 TO GAIN ENOUGH SPACE ON LOT 3 TO BUILD A FUTURE DETACHED GARAGE WHILE MEETING THE REQUIRED SETBACKS.

LEGEND

- SECTIONAL MONUMENTATION (FOUND: TYPE, DATE, AGENCY AND LOCATION ETC. AS SHOWN ON THE PLAT).
- SPECIFIES FOUND SURVEY CONTROL MONUMENT AS SHOWN AND NOTED (CLASS 1, RING & LID).
- SPECIFIES FOUND SURVEY CONTROL MONUMENT AS SHOWN AND NOTED. (CLASS II, REBAR & ALUM. CAP).
- SPECIFIES LOT PROPERTY CORNER, OFFSET RIVET, OR NAIL & WASHER SET (IF OFFSET, DISTANCE WILL BE NOTED).

GRAPHIC SCALE

20 0 10 20 40

(IN FEET)

1 inch = 20 ft.

SURVEYOR'S CERTIFICATE

I, JAMES A. RAINES, DO HEREBY CERTIFY THAT I AM A PROFESSIONAL LAND SURVEYOR, AND THAT I HOLD LICENSE NO. 334569 IN ACCORDANCE WITH TITLE 58, CHAPTER 22, PROFESSIONAL ENGINEERS AND LAND SURVEYORS LICENSING ACT AND HAVE COMPLETED A SURVEY OF THE PROPERTY DESCRIBED HEREON IN ACCORDANCE WITH SECTION 17-23-17 UTAH STATE CODE, AND HAVE VERIFIED ALL MEASUREMENTS AND PLACED MONUMENTS AS REPRESENTED ON THIS PLAT. I FURTHER CERTIFY THAT BY AUTHORITY OF THE HEREON OWNER(S), I HAVE SUBDIVIDED SAID TRACT OF LAND DESCRIBED HERE ON INTO LOTS, HEREAFTER TO BE KNOWN AS:

SNOW CANYON ESTATES PARTIAL AMENDMENT "A"

AND THAT THE SAME HAS BEEN CORRECTLY SURVEYED AND STAKED ON THE GROUND AS SHOWN ON THIS PLAT.

PROFESSIONAL LAND SURVEYOR 3/7/24 No.334569 JAMES A. RAINES STATE OF UTAH

MARCH 7TH, 2024
DATE:

JAMES A. RAINES
PROFESSIONAL LAND SURVEYOR
UTAH LICENSE NUMBER 334569

BOUNDARY DESCRIPTION

BEGINNING AT THE SOUTHEAST CORNER OF LOT 1 OF THE "SNOW CANYON ESTATES" SUBDIVISION, RECORDED AND ON FILE AT WASHINGTON COUNTY RECORDERS OFFICE, STATE OF UTAH; RUNNING THENCE ALONG THE LOT LINES OF SAID LOT 1 FOR THE FOLLOWING THREE (3) COURSES: (1) N88°08'42"W 103.44 FEET; (2) THENCE N01°51'08"E 84.15 FEET (3) TO A POINT ON A 1483.19 FOOT RADIUS CURVE TO THE LEFT; THENCE ALONG THE ARC OF SAID CURVE 13.88 FEET THROUGH A CENTRAL ANGLE OF 0°32'10"; TO A POINT THE NORTH BOUNDARY LINE OF SAID "SNOW CANYON ESTATES" SUBDIVISION; THENCE S89°24'41"E ALONG SAID BOUNDARY LINE 202.99 FEET TO A POINT ON THE EAST LOT LINE OF LOT 3 OF SAID "SNOW CANYON ESTATES" SUBDIVISION; THENCE ALONG THE LOT LINES OF SAID LOT 3 FOR THE FOLLOWING THREE (3) COURSES: (1) S00°24'56"W 230.62 FEET; (2) TO A POINT OF A 475.00 FOOT RADIUS NON-TANGENT CURVE TO THE LEFT, WITH A RADIUS WHICH BEARS S20°31'14"E; THENCE ALONG THE ARC OF SAID CURVE 118.35 FEET THROUGH A CENTRAL ANGLE OF 14°16'34"; (3) THENCE N01°05'11"E 186.21 FEET TO THE POINT OF BEGINNING.

CONTAINS 36,352 SQ FT OR 0.83 ACRE MORE OR LESS

OWNER'S DEDICATION

KNOW ALL MEN BY THESE PRESENT THAT THE UNDERSIGNED OWNER OF ALL THE HEREON DESCRIBED TRACT OF LAND, HAVING CAUSED THE SAME TO BE SUBDIVIDED INTO LOTS, TO BE HEREAFTER KNOWN AS:

SNOW CANYON ESTATES PARTIAL AMENDMENT "A"

FOR GOOD AND VALUABLE CONSIDERATION RECEIVED, DOES HEREBY DEDICATE AND CONVEY TO THE CITY OF SANTA CLARA FOR PERPETUAL USE OF THE PUBLIC ALL PARCELS OF LAND SHOWN ON THIS PLAT AS PUBLIC STREETS AND EASEMENTS. ALL LOTS, STREETS AND EASEMENTS ARE NOTES OR SHOWN. THE OWNERS DO HEREBY WARRANT TO THE CITY OF SANTA CLARA AND ITS SUCCESSORS AND ASSIGNS, TITLE TO ALL PROPERTY DEDICATED AND CONVEYED TO PUBLIC USE HEREIN AGAINST THE CLAIMS OF ALL PERSONS. LOTS SHOWN ON THIS PLAT ARE SUBJECT TO THE DECLARATION OF COVENANTS, CONDITIONS AND RESTRICTIONS, RECORDED AND ON FILE AT WASHINGTON COUNTY RECORDERS OFFICE, STATE OF UTAH, DOC. NO. 20160040067. SAID DECLARATION OF COVENANTS, CONDITIONS AND RESTRICTIONS ARE HEREBY INCORPORATED AND MADE PART OF THIS PLAT.

IN WITNESS WHEREOF I HAVE HEREUNTO SET MY HAND THIS _____ DAY OF _____, 20___.

JON ENCE

DAVID M. JENNER

ALEXIS ENCE

LEANNA JENNER

INDIVIDUAL ACKNOWLEDGMENT

STATE OF _____ }
COUNTY OF _____ } S.S.

ON THE ____ DAY OF _____ 20___, PERSONALLY APPEARED BEFORE ME, JON ENCE AND ALEXIS ENCE, WHOM DULY ACKNOWLEDGED TO ME THAT THEY SIGNED THE FOREGOING OWNER'S DEDICATION FREELY AND VOLUNTARILY AND FOR THE USES AND PURPOSES STATED THEREIN.

NOTARY PUBLIC

NOTARY PUBLIC FULL NAME:_____

COMMISSION NUMBER:_____

MY COMMISSION EXPIRES:_____

A NOTARY PUBLIC COMMISSIONED IN UTAH

STAMP IS NOT REQUIRED PER UTAH CODE 46-1-16(6)

INDIVIDUAL ACKNOWLEDGMENT

STATE OF _____ }
COUNTY OF _____ } S.S.

ON THE ____ DAY OF _____ 20___, PERSONALLY APPEARED BEFORE ME, DAVID M. JENNER AND LEANNA JENNER, WHOM DULY ACKNOWLEDGED TO ME THAT THEY SIGNED THE FOREGOING OWNER'S DEDICATION FREELY AND VOLUNTARILY AND FOR THE USES AND PURPOSES STATED THEREIN.

NOTARY PUBLIC

NOTARY PUBLIC FULL NAME:_____

COMMISSION NUMBER:_____

MY COMMISSION EXPIRES:_____

A NOTARY PUBLIC COMMISSIONED IN UTAH

STAMP IS NOT REQUIRED PER UTAH CODE 46-1-16(6)

SNOW CANYON ESTATES PARTIAL AMENDMENT "A"
(LOT 1 & 3)

LOCATED IN

NW 1/4 SECTION 15, TOWNSHIP 42 SOUTH, RANGE 16 WEST,
SALT LAKE BASE AND MERIDIAN
SANTA CLARA CITY, WASHINGTON COUNTY, UTAH

CITY SURVEYORS CERTIFICATE	ENGINEER'S APPROVAL	APPROVAL AS TO FORM	APPROVAL OF THE PLANNING COMMISSION	APPROVAL AND ACCEPTANCE BY THE CITY OF SANTA CLARA, UTAH	TREASURER APPROVAL	RECORDED No.
I, THE SANTA CLARA CITY SURVEYOR, DO HEREBY VERIFY THAT THIS OFFICE HAS EXAMINED THIS SUBDIVISION PLAT AND HAVE DETERMINED THAT IT IS CORRECT AND IN ACCORDANCE WITH INFORMATION ON FILE IN THIS OFFICE.	THE HEREON SUBDIVISION FINAL PLAT HAS BEEN REVIEWED AND IS APPROVED IN ACCORDANCE WITH THE INFORMATION ON FILE IN THIS OFFICE THIS _____ DAY OF _____, A.D. 20_____	APPROVED AS TO FORM, THIS THE _____ DAY OF _____, A.D. 20_____	ON THIS THE _____ DAY OF _____ A.D. 20_____ THE PLANNING COMMISSION OF THE CITY OF SANTA CLARA, HAVING REVIEWED THE ABOVE SUBDIVISION FINAL PLAT AND HAVING FOUND THAT IT COMPLIES WITH THE REQUIREMENTS OF THE CITY'S PLANNING ORDINANCES, AND BY AUTHORITY OF SAID COMMISSION HEREBY APPROVE SAID SUBDIVISION FOR ACCEPTANCE BY THE CITY OF SANTA CLARA, UT.	WE, THE MAYOR AND CITY COUNCIL OF THE CITY OF SANTA CLARA, UT, HAVE REVIEWED THE ABOVE SUBDIVISION FINAL PLAT AND BY AUTHORIZATION OF SAID CITY COUNCIL, RECORD IN THE MINUTES OF ITS MEETING OF THE _____ DAY OF _____ A.D. 20_____ HEREBY ACCEPT SAID FINAL PLAT WITH ALL COMMITMENTS AND OBLIGATIONS PERTAINING THERETO.	I, WASHINGTON COUNTY TREASURER, CERTIFY ON THIS _____ DAY OF _____ A.D. 20__ THAT ALL TAXES, SPECIAL ASSESSMENTS, AND FEES DUE AND OWING ON THIS SUBDIVISION FINAL PLAT HAVE BEEN PAID IN FULL.	
CITY SURVEYOR, CITY OF SANTA CLARA	ENGINEER, CITY OF SANTA CLARA	CITY ATTORNEY, CITY OF SANTA CLARA	CHAIRMAN PLANNING COMMISSION CITY OF SANTA CLARA, UTAH	ATTEST: CITY RECORDER, CITY OF SANTA CLARA MAYOR, CITY OF SANTA CLARA	WASHINGTON COUNTY TREASURER	WASHINGTON COUNTY RECORDER

HIGH POINT ENGINEERING & SURVEYING
ENGINEERING - PLANNING - SURVEYING
1360 WEST 2130 SOUTH
ST. GEORGE UT 84770
OFFICE (435) 688-5283 - SURVEY SCHEDULE (435) 256-2109

No.	Date	By	Revision

Drawn : MDR Date : MARCH, 2024.
Encl : MDR
Checked : JAR
Approved : JAR
Scale : 1" = 20'
Job No : 231026

SNOW CANYON ESTATES PARTIAL AMENDMENT "A"
LOCATED IN
NORTHWEST QUARTER OF SECTION 15,
TOWNSHIP 42 SOUTH, RANGE 16 WEST, SALT LAKE BASE AND MERIDIAN
SANTA CLARA CITY, WASHINGTON COUNTY, UTAH

SHEET 1 1 SHEETS

FILE: 231026 FP AMD

LEGEND

- SECTIONAL MONUMENTATION (FOUND: TYPE, DATE, AGENCY AND LOCATION ETC. AS SHOWN ON THE PLAT)
- SPECIFIES FOUND SURVEY CONTROL MONUMENT AS SHOWN AND NOTED (CLASS 1, RING & LID).
- SPECIFIES FOUND BOUNDARY CORNERS SET WITH 5/8" REBAR AND CAP STAMPED B&G
- SPECIFIES FOUND OR SET RIVET, OR NAIL & WASHER – (FOUND OR SET NOTED).
- SPECIFIES SECTION LINE
- SPECIFIES QUARTER SECTION LINE
- SPECIFIES SUBJECT SUBDIVISION BOUNDARY LINE
- SPECIFIES PROPERTY LINE
- SPECIFIES EXISTING PROPERTY LINE
- SPECIFIES EXISTING BLOCK PRIVACY WALL
- SPECIFIES EXISTING BUILDING
- SPECIFIES EXISTING EDGE OF CONCRETE
- SPECIFIES EXISTING CONCRETE CURB & GUTTER
- SPECIFIES PARTIAL RELEASE PARCEL

NOTES

1. NO ATTEMPT HAS BEEN MADE AS A PART OF THIS BOUNDARY SURVEY TO OBTAIN OR SHOW DATA CONCERNING EXISTENCE, SIZE, DEPTH, CONDITION, CAPACITY, OR LOCATION OF ANY UTILITY OR MUNICIPAL/PUBLIC SERVICE FACILITY. FOR INFORMATION REGARDING THESE UTILITIES OR FACILITIES, PLEASE CONTACT THE APPROPRIATE AGENCIES.

2. SURVEYOR HAS MADE NO INVESTIGATION OR INDEPENDENT SEARCH FOR EASEMENTS OF RECORD, ENCUMBRANCES, RESTRICTIVE COVENANTS, OWNERSHIP, TITLE EVIDENCE, OR ANY OTHER FACTS WHICH AN ACCURATE AND CURRENT TITLE SEARCH MAY DISCLOSE.

3. ALL COURSES SHOWN IN PARENTHESIS ARE RECORD INFORMATION TAKEN FROM DEED DESCRIPTION OR OFFICIAL MAPS OR PLATS OF RECORD. ALL OTHER COURSES ARE THE RESULT OF ACTUAL FIELD MEASUREMENTS.

4. THE FIELD WORK WAS PERFORMED ON FEBRUARY 10TH, 2024.

SURVEYOR'S CERTIFICATE

I, JAMES A. RAINES, DO HEREBY CERTIFY THAT I AM A PROFESSIONAL LAND SURVEYOR, AND THAT I HOLD LICENSE NO. 334569 IN ACCORDANCE WITH TITLE 58, CHAPTER 22, PROFESSIONAL ENGINEERS AND LAND SURVEYORS LICENSING ACT AND HAVE COMPLETED A SURVEY OF THE PROPERTY DESCRIBED HEREON IN ACCORDANCE WITH SECTION 17-23-17 UTAH STATE CODE, AND HAVE VERIFIED ALL MEASUREMENTS AND PLACED MONUMENTS AS REPRESENTED ON THIS PLAT. I FURTHER CERTIFY THAT BY AUTHORITY OF THE HEREON OWNER(S), I HAVE CORRECTLY SURVEYED AND STAKED ON THE GROUND AS SHOWN ON THIS PLAT.

FEBRUARY 14TH, 2024
DATE:

PROFESSIONAL LAND SURVEYOR
02/14/24
No.334569
JAMES A. RAINES
STATE OF UTAH

JAMES A. RAINES
PROFESSIONAL LAND SURVEYOR
UTAH LICENSE NUMBER 334569

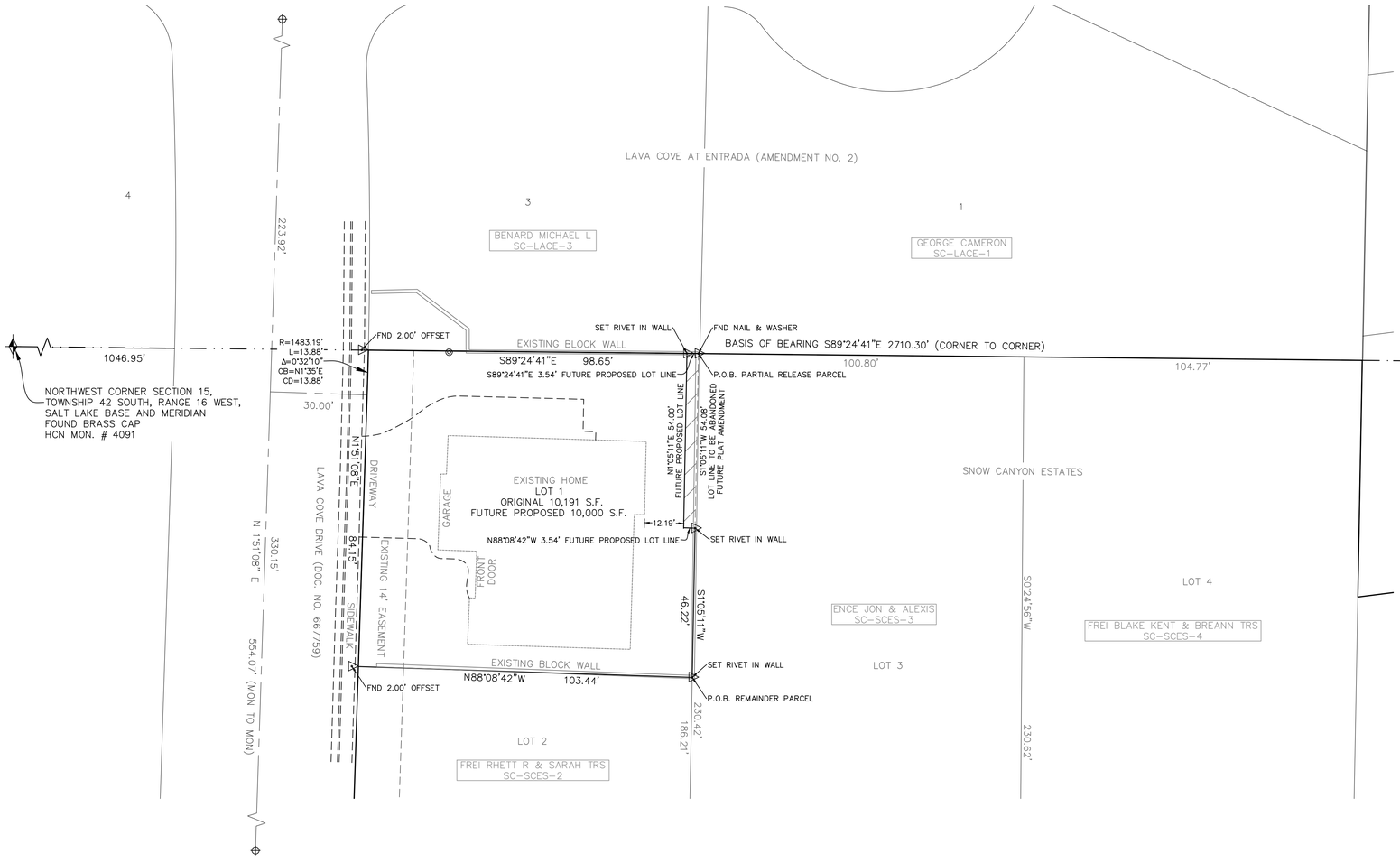

BOUNDARY DESCRIPTION

PARTIAL RELEASE PARCEL:

BEGINNING AT THE NORTHEAST CORNER OF LOT 1 OF THE "SNOW CANYON ESTATES" SUBDIVISION, RECORDED AND ON FILE AT WASHINGTON COUNTY RECORDERS OFFICE, STATE OF UTAH; RUNNING THENCE ALONG THE LOT LINE OF SAID LOT 1 FOR THE FOLLOWING ONE (1) COURSE: (1) S01°05'11"W 54.08 FEET; THENCE N88°08'42"W 3.54 FEET; THENCE N01°05'11"E 54.00 FEET; THENCE S89°24'41"E 3.54 FEET TO THE POINT OF BEGINNING.

CONTAINS 191 SQ FT OR 0.004 ACRE MORE OR LESS

REMAINDER PARCEL:

BEGINNING AT THE SOUTHEAST CORNER OF LOT 1 OF THE "SNOW CANYON ESTATES" SUBDIVISION, RECORDED AND ON FILE AT WASHINGTON COUNTY RECORDERS OFFICE, STATE OF UTAH; RUNNING THENCE ALONG THE LOT LINE OF SAID LOT 1 FOR THE FOLLOWING FOUR (4) COURSE: (1) N88°08'42"W 103.44 FEET; (2) THENCE N01°51'08"E 84.15 FEET (3) TO A POINT ON A 1483.19 FOOT RADIUS CURVE TO THE LEFT; THENCE ALONG THE ARC OF SAID CURVE 13.88 FEET THROUGH A CENTRAL ANGLE OF 0°32'10"; (4) THENCE S89°24'41"E 98.65 FEET; THENCE S01°05'11"W 54.00 FEET; THENCE S88°08'42"E 3.54 FEET TO A POINT ON THE EAST LOT LINE OF SAID LOT 1; THENCE ALONG SAID LOT LINE S01°05'11"W 44.21 FEET TO THE POINT OF BEGINNING.

CONTAINS 10,000 SQ FT OR 0.23 ACRE MORE OR LESS

GRAPHIC SCALE

20 0 10 20 40
(IN FEET)
1 inch = 20 ft.

NARRATIVE

THE PURPOSE OF THIS SURVEY IS TO ESTABLISH THE BOUNDARY CORNERS OF THE ABOVE DESCRIBED PARCELS AND TO ESTABLISH THE AREA OF WHICH WILL BE INCLUDED IN A PARTIAL RELEASE OF THE TRUST DEED ON THIS PROPERTY, ALONG WITH THE REMAINDER PARCEL. THE SURVEY WAS PERFORMED AT THE REQUEST OF OUR CLIENT. THE BASIS OF BEARING FOR THIS SURVEY IS S89°24'41"E ALONG THE NORTH LINE OF SECTION 15, TOWNSHIP 42 SOUTH, RANGE 16 WEST SALT LAKE BASE AND MERIDIAN, BETWEEN THE NORTHWEST CORNER & THE NORTH QUARTER CORNER OF SAID SECTION 15, MONUMENTS, TYPE AND LOCATIONS OF WHICH ARE SHOWN ON THIS PLAT.

THE FOLLOWING DOCUMENTS OF RECORD WERE REVIEWED AND CONSIDERED AS A PART OF THIS SURVEY. THERE MAY EXIST OTHER DOCUMENTS EITHER PRIVATE OR OF RECORD THAT WOULD AFFECT THIS SURVEY. ANY NEW EVIDENCE CONTRADICTORY TO THIS SURVEY SHOULD BE PRESENTED TO HIGH POINT ENGINEERING & SURVEYING, LLC. FOR REVIEW AND CONSIDERATION.

SUBDIVISION PLAT, "SNOW CANYON ESTATES" ENTRY NO. 20160040060
ROAD DEDICATION PLAT, "LAVA COVE DRIVE" ENTRY NO. 667759

RECORD OF SURVEY PLAT

TAX ID: SC-SCES-1
LOCATED IN
NW 1/4 SECTION 15, TOWNSHIP 42 SOUTH, RANGE 16 WEST, SALT LAKE BASE AND MERIDIAN
PREPARED FOR: DAVID & LEANNA JENNER

No.	Date	By	Revision

HIGH POINT ENGINEERING & SURVEYING
ENGINEERING - PLANNING - SURVEYING
1360 WEST 2130 SOUTH
ST. GEORGE UT 84770
OFFICE (435) 688-5283 - SURVEY SCHEDULE (435) 256-2109

Drawn : MDR Date : FEBRUARY, 2024
Email : MDR
Checked : JAR
Approved : JAR
Scale : 1" = 20'
Job No 231026

RECORD OF SURVEY PLAT
LOCATED IN
NORTHWEST QUARTER OF SECTION 15,
TOWNSHIP 42 SOUTH, RANGE 16 WEST, SALT LAKE BASE AND MERIDIAN
PREPARED FOR: PREPARED FOR: DAVID & LEANNA JENNER

SHEET
1
1
SHEETS
FILE: 231026 ROS

LEGEND

- SECTIONAL MONUMENTATION (FOUND: TYPE, DATE, AGENCY AND LOCATION ETC. AS SHOWN ON THE PLAT).
- SPECIFIES SURVEY CONTROL MONUMENT TO BE SET (CLASS 1, RING & LID SET TO CITY STANDARD).
- SPECIFIES FOUND SURVEY CONTROL MONUMENT AS SHOWN AND NOTED (CLASS 1, RING & LID).
- SPECIFIES SURVEY CONTROL MONUMENT TO BE SET (CLASS II, REBAR & ALUM. CAP SET TO CITY STANDARD).
- SPECIFIES FOUND SURVEY CONTROL MONUMENT AS SHOWN AND NOTED. (CLASS II, REBAR & ALUM. CAP).
- SPECIFIES FRONT LOT PROPERTY CORNER OFFSET RIVET, OR NAIL & WASHER SET & OFFSET DISTANCE NOTED).
- ALL BOUNDARY AND PROPERTY (LOT) CORNERS TO BE SET WITH 5/8" REBAR AND CAP STAMPED BUSH & GUDGELL, UNLESS OTHERWISE SPECIFIED ON THE PLAT.
- SHARED LOT ACCESS FOR LOTS 5 & 6
- POWER LINE EASEMENT

NORTH 1/4 SECTION 15, TOWNSHIP 42 SOUTH, RANGE 16 WEST, SALT LAKE BASE AND MERIDIAN
FOUND 19 BRASS CAP
HCN MON. # 112

SOUTH 1/4 SECTION 15, TOWNSHIP 42 SOUTH, RANGE 16 WEST, SALT LAKE BASE AND MERIDIAN
FOUND 19 BRASS CAP
HCN MON. # 117

S 1°07'33" W 5335.13'

1720 NORTH

2500 WEST STREET

N 1°07'33" E 523.71'

N 7°09'28" W 519.05'

1780 NORTH STREET

CANYON TERRACE ESTATES PHASE 7

WASHINGTON COUNTY SCHOOL DISTRICT
SG-6-2-15-1303

1610 NORTH

LITTLE LEAGUE DRIVE

S 7°09'28" E 560.43'

S 1°07'33" W 707.77'

S89°15'30"E 18.64'

S 0°37'57" E 376.35'

DESERT HEIGHTS DRIVE

POWERLINE EASEMENT

P.O.B.

S1°03'46"W 73.29'

S 1°03'46" W 126.35'

N 1°03'50" E 87.51'

S 26°28'06" W 7.50'

N40°47'06"W 41.45'

50.00' UTILITY EASEMENT

NEWPORT L C
SG-6-2-15-430

KENT FREI
SG-6-2-15-421

N 88°57'01" W 206.10'

S 47°07'29" E 172.39'

N 88°55'27" W 2.50'

S 1°04'33" W 223.02'

S 10°29'25" E 131.74'

S 1°03'22" E 105.07'

N 1°51'08" E

S 0°24'56" W 230.62'

N 1°05'11" E 100.30'

286.51'

186.21'

S 89°24'41" W 2710.30' (CORNER TO CORNER)

S 89°24'41" E 307.76'

100.80'

104.77'

LAVA COVE AT ENTRADA (AMENDMENT NO. 2)

BASIS OF BEARING N 89°24'41" W 2710.30' (CORNER TO CORNER)

LAVA COVE DRIVE (DOC. NO. 667759)

N 1°46'14" E 721.64'

N 1°46'47" E 198.06'

N 1°46'14" E 366.56'

S 15°59'29" E 260.70'

N19°43'55"W 54.40'

N43°55'26"W 73.09'

R=1483.19'
L=13.88'
Δ=0°32'10"

R=370.00'
L=146.29'
Δ=22°39'12"

R=430.00'
L=169.40'
Δ=22°34'18"

SANTA CLARA TOWN
SC-6-2-15-440

SANTA CLARA TOWN
SC-6-2-15-4000

KENT FREI
SG-6-2-15-431

LOT 1 10,191 S.F.
LOT 2 22,112 S.F.
LOT 3 26,161 S.F.
LOT 4 22,196 S.F.
LOT 5 13,210 S.F.
LOT 6 12,949 S.F.
LOT 7 13,408 S.F.
LOT 8 14,822 S.F.
LOT 9 14,329 S.F.
LOT 10 12,245 S.F.
LOT 11 10,828 S.F.
LOT 12 10,319 S.F.
LOT 13 10,312 S.F.
LOT 14 13,740 S.F.
LOT 15 10,317 S.F.
LOT 16 12,731 S.F.
LOT 17 10,535 S.F.
LOT 18 10,541 S.F.
LOT 19 11,246 S.F.
LOT 20 12,008 S.F.
LOT 21 12,636 S.F.
LOT 22 11,592 S.F.
LOT 23 11,624 S.F.
LOT 24 14,113 S.F.
LOT 25 11,896 S.F.
LOT 26 12,019 S.F.
LOT 27 12,128 S.F.
LOT 28 15,261 S.F.
LOT 29 15,717 S.F.
LOT 30 14,253 S.F.
LOT 31 13,619 S.F.
LOT 32 13,558 S.F.
LOT 33 11,641 S.F.
LOT 34 13,499 S.F.
LOT 35 12,200 S.F.
LOT 36 12,578 S.F.
LOT 37 13,807 S.F.
LOT 38 14,958 S.F.
LOT 39 15,160 S.F.
LOT 40 15,216 S.F.
LOT 41 14,235 S.F.
LOT 42 12,320 S.F.
LOT 43 10,716 S.F.

CURVE TABLE			
CURVE NO.	LENGTH	RADIUS	DELTA
C1	31.78'	20.00'	91°01'48"
C2	81.17'	125.00'	37°12'23"
C3	13.16'	475.00'	1°35'16"
C4	118.35'	475.00'	14°16'34"
C5	44.80'	475.00'	5°24'16"
C6	32.50'	20.00'	93°06'36"
C7	55.78'	272.50'	11°43'42"
C8	25.88'	272.50'	5°26'30"
C9	69.59'	752.50'	5°17'56"
C10	54.30'	752.50'	4°08'03"
C11	23.24'	797.50'	1°40'10"
C12	104.62'	797.50'	7°30'58"
C13	33.12'	797.50'	2°22'46"
C14	31.40'	20.00'	89°57'01"
C15	31.43'	20.00'	90°02'59"
C16	19.25'	20.00'	55°09'00"
C17	18.21'	50.00'	20°51'43"
C18	66.43'	50.00'	76°07'05"
C19	64.20'	50.00'	73°33'45"
C20	100.01'	50.00'	114°36'08"

CURVE TABLE			
CURVE NO.	LENGTH	RADIUS	DELTA
C21	4.75'	20.00'	13°37'05"
C22	12.70'	20.00'	36°22'36"
C23	101.00'	752.50'	7°41'25"
C24	50.89'	752.50'	3°52'30"
C25	13.94'	797.50'	1°00'06"
C26	82.69'	797.50'	5°56'26"
C27	34.67'	797.50'	2°29'27"
C28	68.99'	227.50'	17°22'26"
C29	33.03'	20.00'	94°37'04"
C30	82.60'	425.00'	11°08'07"
C31	16.33'	425.00'	2°12'05"
C32	115.09'	175.00'	37°40'55"
C33	31.22'	20.00'	89°26'43"
C34	87.59'	370.00'	13°33'50"
C35	58.70'	370.00'	9°05'22"
C36	54.80'	430.00'	7°18'07"
C37	91.16'	430.00'	12°08'47"
C38	23.44'	430.00'	3°07'25"

NORTHWEST CORNER SECTION 15,
TOWNSHIP 42 SOUTH, RANGE 16 WEST,
SALT LAKE BASE AND MERIDIAN
FOUND 19 BRASS CAP
HCN MON. # 4091

GRAPHIC SCALE

60 0 30 60 120

(IN FEET)
1 inch = 60ft.

SNOW CANYON ESTATES

LOCATED IN
NORTHWEST 1/4 OF SECTION 15, TOWNSHIP 42 SOUTH, RANGE 16 WEST,
SALT LAKE BASE AND MERIDIAN

No.	Date	By	Revision

BUSH & GUDGELL, INC.
Engineers - Planners - Surveyors
205 East Tabernacle Suite #4
St. George, Utah 84770
Phone (435) 673-2337 / Fax (435) 673-3161
www.bushandgudgell.com

Drawn : BBS
Designer : BBS
Checked : RBH
Approved : RBH
Scale : 1"=80'
Job No : 141247
Date : 8-16-2016

SNOW CANYON ESTATES
LOCATED IN
NW 1/4 OF SECTION 15, TOWNSHIP 42 SOUTH, RANGE 16 WEST,
SALT LAKE BASE & MERIDIAN

SHEET
2
2
SHEETS
FILE: 141247

HIGH POINT ENGINEERING & SURVEYING
ENGINEERING • PLANNING • SURVEYING

SNOW CANYON ESTATES PARTIAL AMENDMENT (LOTS 1&3)

PROJECT NARRATIVE

The purpose of partially amending the Snow Canyon Estates Subdivision plat is to adjust a portion of the shared lot line between Lots 1 & 3 to provide enough room to meet the required setbacks to construct a future detached garage on said Lot 3. The project was limited to a maximum area being transferred of 191 square feet due to the current zoning requiring a minimum lot square footage of 10,000 square feet for each lot. It is being purposed to reduce Lot 1 to the minimum square footage to 10,000 square feet.

1360 West 2130 South, St. George, UT 84770, Cell: (435) 668-5293, Email: marcraines@gmail.com

Mayor
Rick Rosenberg

City Manager
Brock Jacobsen

CITY OF
SANTA CLARA
FOUNDED 1854

City Council
Jarett Waite
Ben Shakespeare
Christa Hinton
Janene Burton
Dave Pond

CITY COUNCIL

Meeting Date: 10/Apr/24 **Agenda Item:** 2

Applicant: Charles Gay **Requested by:** Jim McNulty

Subject: Subdivision Extension & Partial Plat

Amendment

Description:

Charles Gay is requesting to extend and amend the Hills @ Santa Clara Subdivision, Phase 2B. The applicant is proposing to amend Lot 210 and add Lot 233 (Parcel #SC-6-2-17-7394) to the subdivision. Lot 210 is currently 10,893 sq. ft. and will be increased to 14,607 sq. ft. (0.34 acres). The proposed Lot 233 is currently 13,288 sq. ft. and will be decreased to 9,574 sq. ft. (0.22 acres). Both lots are undeveloped except for required public improvements (e.g., curb, gutter, sidewalk, and utilities).

Recommendation:
Approval **Cost:** N/A

Attachments: N/A

Legal Approval: N/A

Finance Approval: N/A

Budget Approval: N/A

City of Santa Clara
2603 Santa Clara Drive
(435) 656-4690, Ext. 225
jmcnulty@sccity.org

Staff Report

Subdivision Plat Amendment
Summary and Recommendation

Public Body: Santa Clara City Council
Meeting Date: April 10, 2024
Current Zone: R-1-10/Mixed Lot Size
Property Address: 1471 Colby Loop (Lot 210), and 1459 Colby Loop (Lot 233)
Request: Extension & Partial Plat Amendment for Lot 210 and Lot 233 of the Hills @ Santa Clara Subdivision, Phase 2B
Applicant Name: Charles Gay
Staff Planner: Jim McNulty
City Staff Recommendation: Approve with conditions
Meeting Type: Public Meeting

PROJECT DESCRIPTION

The applicant, ***Charles Gay, is requesting to extend and amend the Hills @ Santa Clara Subdivision, Phase 2B.*** The applicant is proposing to amend Lot 210 and add Lot 233 (Parcel #SC-6-2-17-7394) to the subdivision. Lot 210 is currently 10,893 sq. ft. and will be increased to 14,607 sq. ft. (0.34 acres). The proposed Lot 233 (Parcel #SC-6-2-17-7394) is currently 13,288 sq. ft. and will be decreased to 9,574 sq. ft. (0.22 acres). Both lots are undeveloped except for required public improvements (e.g., curb, gutter, sidewalk, and utilities).

Both amended lots will meet the area, width, and yard regulations as per Section 17.65.050 of city ordinance. Charles Gay is the owner of both lots and intends to build a single-family home on Lot 210. Lot 233 would be sold as a building lot to a potential property owner and includes existing subdivision improvements. The proposed extension and partial plat amendment will allow for the proposed changes to be shown on a recorded subdivision plat.

SITE & VICINITY DESCRIPTION

The subject properties are in the southwestern part of the city on Colby Loop. Major cross streets in the vicinity include Clary Hills Drive and Gates Lane providing access to Santa Clara Drive.

Request: Partial Plat Amendment

ISSUES OF CONCERN/PROPOSED MITIGATION

No issues of concern have been identified for this application.

NEIGHBORHOOD RESPONSE

Notices were sent to the property owners within the Hills @ Santa Clara Subdivision, Phase 2. No responses have been received by city staff as of the writing of this report. The property has also been posted for a public meeting as per State Code requirements.

REVIEWING DEPARTMENTS

DEPARTMENT: *Building*
Recommendations: A geotechnical report will be required for Lot 210 and Lot 233 prior to residential structures being built on the properties.
Required Revisions: None at this time.

DEPARTMENT: *Parks & Recreation*
Recommendations: N/A
Required Revisions: N/A

DEPARTMENT: *Police & Fire*
Recommendations: N/A
Required Revisions: N/A

DEPARTMENT: *Power*
Recommendations: Public Utility Easements (PUE's) are required to be shown on the final plat.
Required Revisions: None at this time.

DEPARTMENT: *Public Works*
Recommendations: Any public utility easement that's affected by this amendment needs to be relocated. No additional public improvements are required. A final mylar with signature blocks is required.
Required Revisions: None at this time.

STATE CODE CONSIDERATIONS

Utah Code, Section 10-9a-207 includes requirements for subdivision amendments. To amend a subdivision, a city must hold at least one public meeting (not public hearing). Additionally, a public meeting to consider an amendment to a subdivision requires 10 days' notice rather than 24 hours' notice. A notice must also be sent to property owners in the subdivision, with a notice in a visible location, with a sign of sufficient size and durability. Planning Staff has determined that all State Code requirements have been met with this application.

CITY STAFF RECOMMENDATION

On March 28, 2024, the Planning Commission held a public meeting and forwarded a recommendation of approval to the City Council. City staff recommends that the City Council consider granting approval of the Extension and Partial Plat Amendment for Lot 210 and Lot 233 of the Hills @ Santa Clara Subdivision, Phase 2B, subject to the following conditions:

Request: Partial Plat Amendment

1. That the applicant be required to comply with the recommendations from all city reviewing departments.
2. That both lots (Lots 210 & 233) meet the area, width, and yard regulations as per Section 17.65.050 of city ordinance.
3. That the Owner's Dedication & Acknowledgement be signed prior to final plat recordation.
4. That the applicant be required to record the amended subdivision plat and provide an electronic copy to city staff.

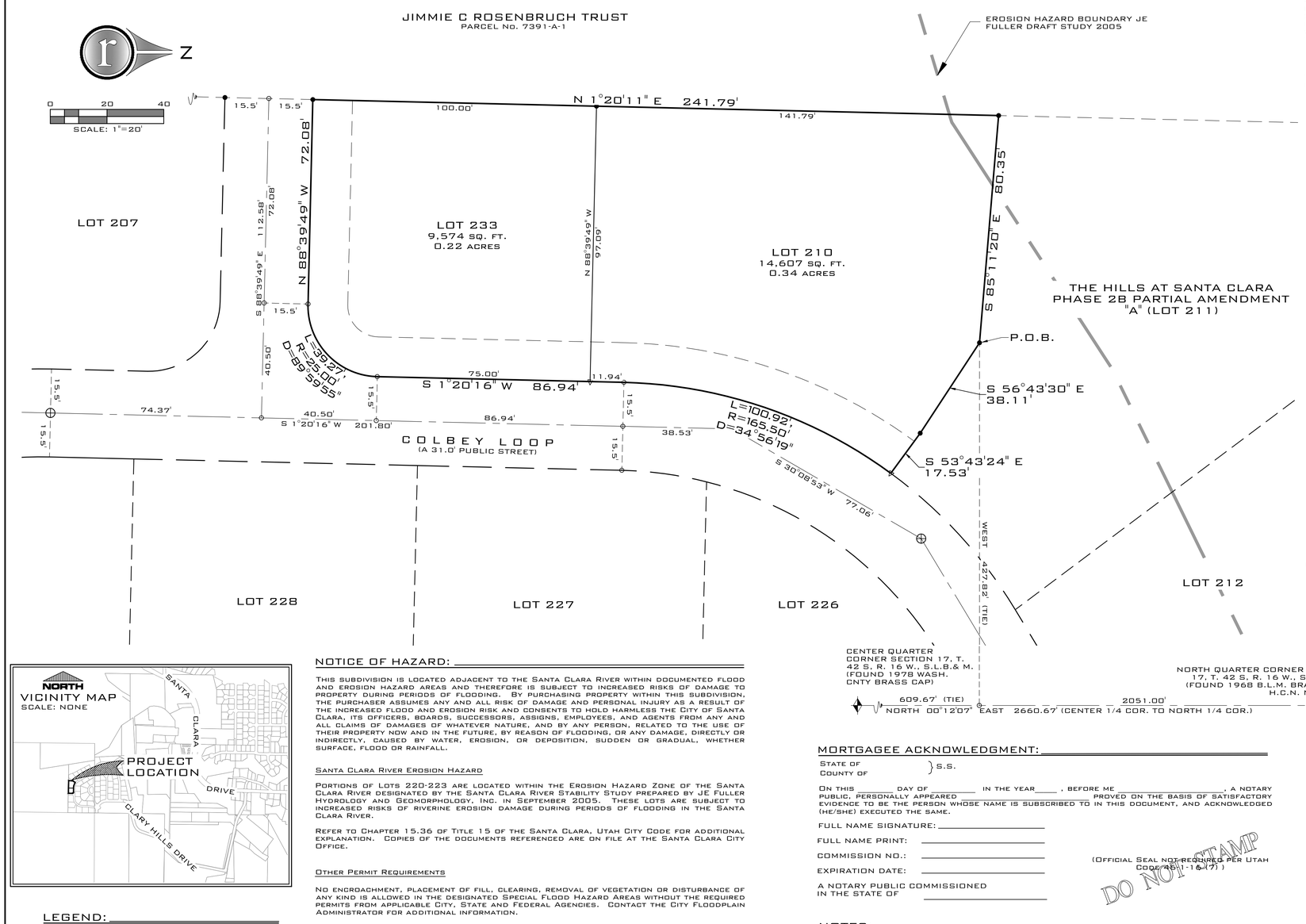

SURVEYOR'S CERTIFICATE:

I, Brandon E. Anderson, Professional Land Surveyor Number 4938716, hold a License in accordance with Title 58, Chapter 22, Professional Engineers and Land Surveyors Licensing Act and have completed a survey of the property described hereon in accordance with Section 17-23-17 and hereby certify all measurements and descriptions are correct. Monuments will be set as represented on this plat I further certify that by authority of the hereon Owners, I have made a survey of the tract of land shown on this plat and have subdivided the same tract into lots and easements to be hereinafter known as:

THE HILLS AT SANTA CLARA -PHASE 2B- EXTENDED
& PARTIAL PLAT AMENDMENT

That the same has been correctly surveyed and points established on the ground in accordance with the hereon legal description.

PROFESSIONAL LAND SURVEYOR
CERTIFICATE NO.
4938716
BRANDON E.
ANDERSON
STATE OF UTAH

Date:

Brandon E. Anderson — Certificate No. 4938716

LEGAL DESCRIPTION:

Beginning at a point being North 00°12'07" East 609.67 feet along the section line and West 427.82 feet from the Center Quarter Corner of Section 17, Township 42 South, Range 16 West, Salt Lake Base & Meridian, said point being on Southerly line of Lot 211 of The Hills at Santa Clara Phase 2B, Lots 210 and 211, Partial Amendment "A", as found on file with the Washington County Recorder's Office, Entry No. 20210076418 and running;

thence along said Southeasterly line of said Lot 211 the following (2) courses;
thence South 56°43'30" East 38.11 feet;
thence South 53°43'24" East 17.53 feet to a point on the Westerly line of Colbey Loop;
thence Southerly along said Westerly line of Colbey Loop the following (3) courses;
thence Southerly 100.92 feet along an arc of a 165.50 foot radius non-tangent curve to the left (center bears South 53°43'24" East, long chord bears South 18°48'26" West 99.36 feet with a central angle of 34°56'19");
thence South 01°20'16" West 86.94 feet;
thence Southwesterly 39.27 feet along an arc of a 25.00 foot radius curve to the right (center bears North 88°39'44" West, long chord bears South 46°20'14" West 35.35 feet with a central angle of 89°59'55");
thence North 88°39'49" West 72.08 feet to a point on the Westerly line of The Hills at Santa Clara Phase 2B, as found on file with the Washington County Recorder's Office, Entry No. 20160015048;
thence North 01°20'11" East 241.79 feet to and along the Westerly line of said The Hills at Santa Clara Phase 2B, Lots 210 and 211, Partial Amendment "A", to the Southwesterly corner of said Lot 211;
thence South 85°11'20" East 80.35 feet along said Southerly line Lot 211 to the Point of Beginning.

Containing 24,181 square feet or 0.56 acres.

OWNER'S DEDICATION:

Know all men by these presents that the undersigned owner of all the above described tracts of land having caused the same to be subdivided into lots and easements to be hereafter known as:

THE HILLS AT SANTA CLARA -PHASE 2B- EXTENDED
& PARTIAL PLAT AMENDMENT

For good and valuable consideration received, does hereby dedicate and convey to Santa Clara City for perpetual use of the public all parcels of land shown on this plat as public easements. All lots and easements are as noted or shown. The owners do hereby warrant and assign to Santa Clara City and its successors, title to all property dedicated and conveyed to public use herein against the claims of all persons.

In witness whereof we have hereunto set our hands this _____ day of _____, 20_____.

Charles Elwood Gay II, as to a portion — Charles Gay II, as to a portion

Charles Elwood Gay II - Owner — Charles Gay II - Owner

OWNERS ACKNOWLEDGMENT:

State of Utah } S.S.
County of _____ }

On this _____ day of _____ in the year_____ , before me _____, a notary public, personally appeared _____, and proved on the basis of satisfactory evidence to be the person whose name is subscribed to in this document, and acknowledged (they) executed the same.

Full name signature: _____
Full name print: _____
Commission No.: _____
Expiration date: _____
A notary public commissioned in the state of _____

(Official Seal not required per Utah Code 46-1-16 (7))

DO NOT STAMP

MORTGAGEE ACKNOWLEDGMENT:

State of _____ } S.S.
County of _____ }

On this _____ day of _____ in the year_____ , before me _____, a notary public, personally appeared _____ proved on the basis of satisfactory evidence to be the person whose name is subscribed to in this document, and acknowledged (he/she) executed the same.

Full name signature: _____
Full name print: _____
Commission No.: _____
Expiration date: _____
A notary public commissioned in the state of _____

(Official Seal not required per Utah Code 46-1-16 (7))

DO NOT STAMP

MORTGAGEE AND LENDER CONSENT TO RECORD:

America First Federal Credit Union, as mortgagee and lender of the said tract of land does hereby give consent of said tract of land to be used for the uses and purposes described in the plat, to recording plat, recording of Covenants, Conditions and Restrictions and joins in all dedications and conveyances.

(Print Name - _____) - Vice President

LEGEND:

- ◉ FOUND REBAR & CAP AS NOTED
- ○ NOTHING SET OR FOUND
- ⊕ FOUND SURVEY CONTROL MONUMENT - CLASS I
- ● SET CORNER - 5/8" X 20" REBAR & PLASTIC CAP - ROSENBERG ASSOCIATES
- ✦ FOUND SECTION MONUMENTATION AS SHOWN AND DESCRIBED
- ◬ SET PK/WASHER ON LOT LINE EXTENSION

NOTICE OF HAZARD:

This subdivision is located adjacent to the Santa Clara River within documented flood and erosion hazard areas and therefore is subject to increased risks of damage to property during periods of flooding. By purchasing property within this subdivision, the purchaser assumes any and all risk of damage and personal injury as a result of the increased flood and erosion risk and consents to hold harmless the City of Santa Clara, its officers, boards, successors, assigns, employees, and agents from any and all claims of damages of whatever nature, and by any person, related to the use of their property now and in the future, by reason of flooding, or any damage, directly or indirectly, caused by water, erosion, or deposition, sudden or gradual, whether surface, flood or rainfall.

Santa Clara River Erosion Hazard

Portions of Lots 220-223 are located within the Erosion Hazard Zone of the Santa Clara River designated by the Santa Clara River Stability Study prepared by JE Fuller Hydrology and Geomorphology, Inc. in September 2005. These lots are subject to increased risks of riverine erosion damage during periods of flooding in the Santa Clara River.

Refer to Chapter 15.36 of Title 15 of the Santa Clara, Utah City Code for additional explanation. Copies of the documents referenced are on file at the Santa Clara City Office.

Other Permit Requirements

No encroachment, placement of fill, clearing, removal of vegetation or disturbance of any kind is allowed in the designated Special Flood Hazard Areas without the required permits from applicable City, State and Federal agencies. Contact the City Floodplain Administrator for additional information.

GEOTECHNICAL INVESTIGATION:

A geotechnical investigation was performed by GTS Consulting. The investigation results and specific recommendations for the construction of foundations, floor slabs and exterior flatwork, are compiled in a report dated August 20, 2012. This report is available from the Developer and a copy is on file with Santa Clara City. Owners, builders and contractors should become familiar with this report and comply with its recommendations.

AMENDMENT NOTE:

The purpose of this amendment is to move the South line of Lot 210 of The Hills at Santa Clara Phase 2B, Lots 210 and 211 Partial Amendment 'A', Entry No. 20210076418 to the South 38 feet, and to create a new lot, Lot 233 to the South of said Lot 210. No other changes were made with this plat.

NOTES:

1. All lots in this subdivision are subject to a 14.00 foot wide public utility, sidewalk and drainage easement along the Street, unless otherwise noted on plan.
2. All lots in this subdivision are subject to a 20.00 foot front yard setback, an 8.00 and 12.00 foot side yard setback, and a 10.00 foot rear yard setback. Garage setbacks must be a minimum of 20 feet from the back of sidewalk.
3. Not withstanding the posting of bond for installation of off-site improvements, no building permit will be issued for any lot in this subdivision until all utilities are fully installed in the entire subdivision.
4. Unstable soil conditions might exist on lots in this subdivision. Purchasers of lots herein have the sole responsibility for obtaining appropriate engineering services and advice relative to the usability of the lots. The City of Santa Clara disclaims any and all responsibility for such soil conditions, water control (surface and/or subsurface), and drainage control.
5. All Street Landscaping shall conform to Santa Clara City's Landscape Ordinance.

THE HILLS AT SANTA CLARA -PHASE 2B-

EXTENDED & PARTIAL PLAT AMENDMENT (LOTS 210 & 233)

LOCATED IN THE N.W. 1/4 SECTION 17,
TOWNSHIP 42 SOUTH,RANGE 16 WEST,
SALT LAKE BASE AND MERIDIAN
SANTA CLARA CITY, WASHINGTON COUNTY, UTAH.

ROSENBERG ASSOCIATES
CIVIL ENGINEERS • LAND SURVEYORS
352 East Riverside Drive, Suite A-2, St. George, Utah 84790 Ph (435) 673-8586 Fx (435) 673-8397, www.RACIVIL.COM

SURVEY-FPLAT FILE NUMBER:	02/05/24 DATE:	C.G.A. DRAWN:
14129-24 JOB NUMBER:	1" = 20' SCALE:	B.E.A. CHECKED:

ENGINEER'S APPROVAL:

The hereon subdivision has been reviewed and is approved in accordance with information on file in this office, this _____ day of _____ , 20_.

ENGINEER
SANTA CLARA CITY, UTAH

CITY PLANNING DIRECTOR:

I, the Santa Clara City Planning Director, do verify that I have examined this subdivision plat and have determined that it complies with the requirements of Santa Clara City's Planning Ordinances.

CITY PLANNING DIRECTOR
SANTA CLARA CITY, UTAH

CITY SURVEYORS CERTIFICATE:

I the Santa Clara City Surveyor, do hereby verify that this office has examined this subdivision plat and have determined that it is correct and in accordance with information on file in this office.

CITY SURVEYOR
SANTA CLARA CITY, UTAH

APPROVAL AND ACCEPTANCE BY THE CITY OF SANTA CLARA, UTAH:

I, the mayor of Santa Clara City, Utah, have reviewed the above subdivision final plat and on behalf of the City hereby accept the said subdivision with all commitments and all obligations pertaining thereto.

CITY RECORDER
SANTA CLARA CITY, UTAH

MAYOR
SANTA CLARA CITY, UTAH

APPROVAL AS TO FORM;

Approved as to form, this _____ day of _____ A.D. 20__.

CITY ATTORNEY
SANTA CLARA CITY, UTAH

TREASURER APPROVAL

I, Washington County Treasurer, certify on this __ day of _____ A.D. 20__ that all taxes, special assessments, and fees due and owing on this subdivision Final Plat have been paid in full.

WASHINGTON COUNTY TREASURER

RECORDED No.

FEE: _____ COUNTY RECORDER
WASHINGTON COUNTY, UTAH

Hills @ Santa Clara, Phase 2B (Amended)

Legend

- Parcels
- Ownership
  - U.S. Forest Service
  - U.S. Forest Service Wilderness
  - Bureau of Land Management
  - Bureau of Land Management Wilde
  - National Park Service
  - Shivwits Reservation
  - Utah Division of Wildlife Resources
  - Utah Division of Transportation
  - State Park
  - State of Utah
  - Washington County
  - Municipally Owned
  - School District
  - Privately Owned
  - Water
  - Water Conservancy District
  - State Assessed Oil and Gas
  - Mining Claim

Notes

Proposed Lots 210 & 233

188.1 0 94.04 188.1 Feet

WGS_1984_Web_Mercator_Auxiliary_Sphere

DISCLAIMER: The information shown on this map was compiled from different GIS sources. The land base and facility information on this map is for display purposes only and should not be relied upon without independent verification as to its accuracy. Washington County, Utah will not be held responsible for any claims, losses or damages resulting from the use of this map.

ROSENBERG ASSOCIATES™
CIVIL ENGINEERS LAND SURVEYORS

Date: March 12, 2024

To: Santa Clara City Building & Planning
Attn: Jim McNulty – Planning and Economic Development
2603 Santa Clara Drive
Santa Clara, Utah 84765

From: Jared W Bates, PE, CFM
Principal Engineer

Subject: **The Hills at Santa Clara – Phase 2B**
Partial Amendment "B" (Lots 210 & 233)
Project Number: 14129-24

This document has been prepared for Charles Elwood Gay II, in support of the proposed Partial Amendment "B" (Lots 210 & 233) of The Hills at Santa Clara Phase 2B. The purpose of the amendment is to add parcel #SC-6-2-17-7394 (new Lot 233) to the current Hills at Santa Clara Phase 2B subdivision and modify the existing southern boundary of Lot 210. Currently, utilities and paved access are provided to both parcels and no additional improvements are proposed at this time. Charles Elwood Gay II is the owner of both parcels and requests to move the southern boundary of Lot 210 to the south to increase the size of Lot 210 to accommodate a proposed home.

DOC # 20160015048
Map (Conveying Property) Page 1 of 3
Russell Shirts Washington County Recorder
04/29/2016 02:59:28 PM Fee $ 80.00
By AMERICAN SECURE TITLE

MAP

NAME: THE HILLS AT SANTA CLARA PHASE 2B

LOTS: 20 MAP #3658

PARCEL: SC-7393-A-1 SC-220-A-1-A-1

THE HILLS AT SANTA CLARA, INC.

LEGAL DESCRIPTION:

Beginning at the Center Quarter Corner of Section 17, Township 42 South, Range 16 West, Salt Lake Base & Meridian, as monumented with a 1978 brass cap, and running;

thence North 89°16'19" West 520.00 feet along the center section line;
thence North 01°20'11" East 368.18 feet;
thence South 88°39'49" East 72.08 feet;
thence northeasterly 39.27 feet along an arc of a 25.00 foot radius curve to the left (center bears North 01°20'11" East, long chord bears North 46°20'14" East 35.35 feet with a central angle of 89°59'55");
thence North 01°20'16" East 86.94 feet;
thence northerly 26.17 feet along an arc of a 165.50 foot radius curve to the right (center bears South 88°39'44" East, long chord bears North 05°52'05" East 26.14 feet with a central angle of 09°03'39");
thence North 88°39'49" West 99.15 feet;
thence North 01°20'11" East 216.89 feet;
thence North 70°27'24" East 111.96 feet;
thence North 59°32'01" East 83.80 feet;
thence North 63°05'04" East 222.73 feet;
thence North 58°03'45" East 18.78 feet;
thence South 16°03'22" East 130.36 feet;
thence easterly 21.77 feet along an arc of a 168.92 foot radius curve to the right (center bears South 17°19'13" East, long chord bears North 76°22'20" East 21.76 feet with a central angle of 07°23'05");
thence northeasterly 29.90 feet along an arc of a 25.00 foot radius curve to the left (center bears North 09°56'08" West, long chord bears North 45°48'01" East 28.15 feet with a central angle of 68°31'42") to the westerly line of The Hills at Santa Clara Phase 1B;
thence southerly the following (14) courses along said westerly line of The Hills at Santa Clara Phase 1B;
thence southerly 37.70 feet along an arc of a 190.50 foot radius curve to the left (center bears South 78°27'50" East, long chord bears South 05°52'00" West 37.64 feet with a central angle of 11°20'22");
thence South 00°11'49" West 112.61 feet;
thence South 58°57'29" West 280.76 feet;
thence South 01°20'16" West 209.89 feet;
thence South 15°33'20" East 46.46 feet;
thence South 53°23'28" East 62.15 feet;
thence South 82°23'13" East 19.74 feet;
thence South 89°15'25" East 166.68 feet;
thence southerly 50.29 feet along an arc of a 165.50 foot radius curve to the left (center bears North 76°36'36" East, long chord bears South 22°05'40" East 50.09 feet with a central angle of 17°24'32");
thence South 30°47'56" East 20.83 feet;
thence southwesterly 53.03 feet along an arc of a 25.00 foot radius curve to the right (center bears South 59°12'04" West, long chord bears South 29°58'19" West 43.63 feet with a central angle of 121°32'31");
thence South 04°33'59" West 31.07 feet;
thence southeasterly 56.55 feet along an arc of a 35.00 foot radius curve to the right (center bears South 00°44'35" West, long chord bears South 42°58'11" East 50.60 feet with a central angle of 92°34'29");
thence southerly 11.52 feet along an arc of a 211.50 foot radius curve to the left (center bears South 86°40'56" East, long chord bears South 01°45'27" West 11.52 feet with a central angle of 03°07'15");
thence South 89°48'07" East 50.00 feet;
thence South 00°11'53" West 47.33 feet to the center section line;
thence North 89°15'11" West 54.66 feet along said center section line to the Point of Beginning.

Containing 294,324 square feet or 6.76 acres.

Unofficial Copy

OWNER'S DEDICATION:

KNOW ALL MEN BY THESE PRESENTS THAT THE UNDERSIGNED OWNER OF ALL THE ABOVE DESCRIBED TRACT OF LAND HAVING CAUSED THE SAME TO BE SUBDIVIDED INTO LOTS AND PUBLIC STREETS TO BE HEREAFTER KNOWN AS:

THE HILLS AT SANTA CLARA PHASE 2B

FOR GOOD AND VALUABLE CONSIDERATION RECEIVED, DOES HEREBY DEDICATE AND CONVEY TO THE CITY OF SANTA CLARA FOR PERPETUAL USE OF THE PUBLIC ALL PARCELS OF LAND SHOWN ON THIS PLAT AS PUBLIC STREETS AND EASEMENTS. ALL LOTS, STREETS AND EASEMENTS ARE NOTED OR SHOWN. THE OWNERS DO HEREBY WARRANT TO THE CITY OF SANTA CLARA AND IT'S SUCCESSORS AND ASSIGNS, TITLE TO ALL PROPERTY DEDICATED AND CONVEYED TO PUBLIC USE HEREIN AGAINST THE CLAIMS OF ALL PERSONS. LOTS SHOWN ON THIS PLAT ARE SUBJECT TO THE DECLARATION OF COVENANTS, CONDITIONS AND RESTRICTIONS, OF "THE HILLS AT SANTA CLARA PHASE 1", RECORDED IN THE OFFICE OF THE WASHINGTON COUNTY RECORDER ON THIS ____ DAY OF ____, 2012 ENTRY NO. ____, IN BOOK ____ PAGE ____, SAID DECLARATION OF COVENANTS, CONDITIONS AND RESTRICTION IS HEREBY INCORPORATED AND MADE PART OF THIS PLAT.

IN WITNESS WHEREOF WE HAVE HEREUNTO SET OUR HANDS THIS 25 DAY OF March, 2016.

THE HILLS AT SANTA CLARA, INC., A UTAH CORPORATION

Niki Sampson
PRESIDENT

CORPORATE ACKNOWLEDGMENT:

STATE OF UTAH
COUNTY OF WASHINGTON } S.S.

ON THE 25th DAY OF March, 2016, PERSONALLY APPEARED BEFORE ME NIKI SAMPSON, WHO BEING BY ME DULY SWORN DID SAY THAT SHE IS THE PRESIDENT OF THE HILLS AT SANTA CLARA, INC., AND THAT SHE EXECUTED THE FOREGOING OWNERS DEDICATION ON BEHALF OF SAID CORPORATION BY AUTHORITY OF A RESOLUTION OF ITS BOARD OF DIRECTORS AND SHE DID ACKNOWLEDGE TO ME THAT THE CORPORATION EXECUTED THE SAME FOR THE PURPOSES STATED THEREIN.

FULL NAME SIGNATURE: Adam Phillips
FULL NAME PRINT: Adam Phillips
COMMISSION NO.: 673529
EXPIRATION DATE: 1/12/18
A NOTARY COMMISSIONED IN THE STATE OF Utah

MORTGAGEE CONSENT TO RECORD:

CHENEY FINANCIAL SERVICES, INC., PROFIT SHARING PLAN, DATED JANUARY 11, 1999, MORTGAGEE OF THE BOVE TRACT OF LAND DOES HEREBY GIVE CONSENT OF SAID TRACT OF LAND TO BE USED FOR THE USES AND PURPOSES DESCRIBED IN THE PLAT, TO RECORDING PLAT, RECORDING OF COVENANTS, CONDITIONS AND RESTRICTIONS AND JOINS IN ALL DEDICATIONS.

Howard W. Cheney
TRUSTEE

TRUSTEE ACKNOWLEDGMENT:

STATE OF UTAH
COUNTY OF WASHINGTON } S.S.

ON THE 25th DAY OF March, 2016, PERSONALLY APPEARED BEFORE ME Howard W. Cheney BEING BY ME DULY SWORN DID SAY THAT HE/SHE IS A TRUSTEE FOR CHENEY FINANCIAL SERVICES, INC., PROFIT SHARING PLAN, DATED JANUARY 11, 1999, AND THAT THE FORGOING INSTRUMENT WAS SIGNED IN BEHALF OF SAID TRUST BY AUTHORITY OF THE TERMS OF THE TRUST AGREEMENT AND HE/SHE ACKNOWLEDGED TO ME THAT SAID TRUST EXECUTED THE SAME FOR THE PURPOSES STATED THEREIN.

FULL NAME SIGNATURE:
FULL NAME PRINT: Adam Phillips
COMMISSION NO.: 673529
EXPIRATION DATE: 1/12/18
A NOTARY COMMISSIONED IN THE STATE OF Utah

MORTGAGEE CONSENT TO RECORD:

SANTA CLARA HILLS HOLDINGS, L.L.C., MORTGAGE OF THE ABOVE TRACT OF LAND DOES HEREBY GIVE CONSENT OF SAID TRACT OF LAND TO BE USED FOR THE USES AND PURPOSES DESCRIBED IN THE PLAT, TO RECORDING PLAT, RECORDING OF COVENANTS, CONDITIONS AND RESTRICTIONS AND JOINS IN ALL DEDICATIONS.

MANAGER

LIMITED LIABILITY COMPANY ACKNOWLEDGMENT:

STATE OF UTAH
COUNTY OF WASHINGTON } S.S.

ON THE 25th DAY OF March 2016, PERSONALLY APPEARED BEFORE ME Eric Sampson, WHO BEING BY ME DULY SWORN DID SAY THAT HE IS THE SANTA CLARA HILLS HOLDINGS, LLC, A UTAH LIMITED LIABILITY COMPANY AND THAT HE EXECUTED THE FOREGOING PLAT IN BEHALF OF SAID LIMITED LIABILITY COMPANY BEING AUTHORIZED AND EMPOWERED TO DO SO BY THE OPERATING AGREEMENT OF SANTA CLARA HILLS HOLDINGS, LLC, AND HE DID DULY ACKNOWLEDGE TO ME THAT SUCH LIMITED LIABILITY COMPANY EXECUTED THE SAME FOR THE USES AND PURPOSES STATES HEREIN.

FULL NAME SIGNATURE:
FULL NAME PRINT: Adam Phillips
COMMISSION NO.: 673529
EXPIRATION DATE: 1/12/18
A NOTARY COMMISSIONED IN THE STATE OF Utah

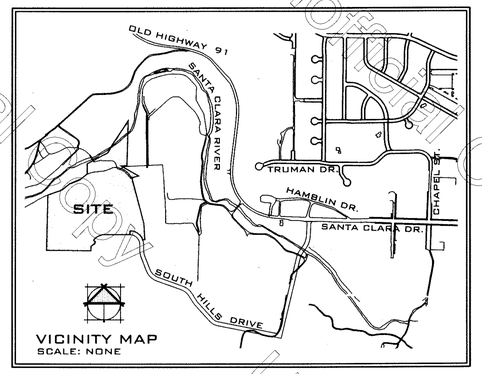

VICINITY MAP
SCALE: NONE

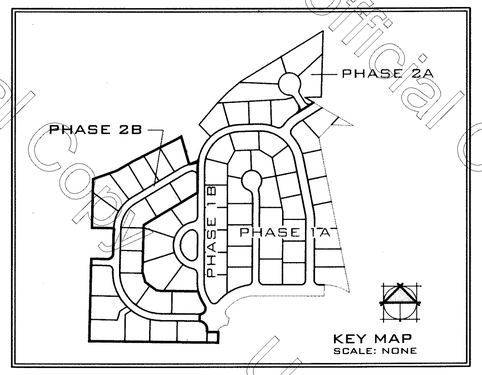

KEY MAP
SCALE: NONE

NOTICE OF HAZARD:

THIS SUBDIVISION IS LOCATED ADJACENT TO THE SANTA CLARA RIVER WITHIN DOCUMENTED FLOOD AND EROSION HAZARD AREAS AND THEREFORE IS SUBJECT TO INCREASED RISKS OF DAMAGE TO PROPERTY DURING PERIODS OF FLOODING. BY PURCHASING PROPERTY WITHIN THIS SUBDIVISION, THE PURCHASER ASSUMES ANY AND ALL RISK OF DAMAGE AND PERSONAL INJURY AS A RESULT OF THE INCREASED FLOOD AND EROSION RISK AND CONSENTS TO HOLD HARMLESS THE CITY OF SANTA CLARA, ITS OFFICERS, BOARDS, SUCCESSORS, ASSIGNS, EMPLOYEES, AND AGENTS FROM AND ALL CLAIMS OF DAMAGES OF WHATEVER NATURE, AND BY ANY PERSON, RELATED TO THE USE OF THEIR PROPERTY NOW AND IN THE FUTURE, BY REASON OF FLOODING, OR ANY DAMAGE, DIRECTLY OR INDIRECTLY, CAUSED BY WATER, EROSION, OR DEPOSITION, SUDDEN OR GRADUAL, WHETHER SURFACE, FLOOD OR RAINFALL.

Santa Clara River Erosion Hazard

PORTIONS OF LOTS 220-223 ARE LOCATED WITHIN THE EROSION HAZARD ZONE OF THE SANTA CLARA RIVER DESIGNATED BY THE SANTA CLARA RIVER STABILITY STUDY PREPARED BY JE FULLER HYDROLOGY AND GEOMORPHOLOGY, INC. IN SEPTEMBER 2005. THESE LOTS ARE SUBJECT TO INCREASED RISKS OF RIVERINE EROSION DAMAGE DURING PERIODS OF FLOODING IN THE SANTA CLARA RIVER.

REFER TO CHAPTER 15.36 OF TITLE 15 OF THE SANTA CLARA, UTAH CITY CODE FOR ADDITIONAL EXPLANATION. COPIES OF THE DOCUMENTS REFERENCED ARE ON FILE AT THE SANTA CLARA CITY OFFICE.

Other Permit Requirements

NO ENCROACHMENT, PLACEMENT OF FILL, CLEARING, REMOVAL OF VEGETATION OR DISTURBANCE OF ANY KIND IS ALLOWED IN THE DESIGNATED SPECIAL FLOOD HAZARD AREAS WITHOUT THE REQUIRED PERMITS FROM APPLICABLE CITY, STATE AND FEDERAL AGENCIES. CONTACT THE CITY FLOODPLAIN ADMINISTRATOR FOR ADDITIONAL INFORMATION.

SURVEYOR'S CERTIFICATE:

I, BRANDON E. ANDERSON, PROFESSIONAL LAND SURVEYOR NUMBER 4938716, HOLD A LICENSE IN ACCORDANCE WITH TITLE 58, CHAPTER 22, PROFESSIONAL ENGINEERS AND LAND SURVEYORS LICENSING ACT AND HAVE COMPLETED A SURVEY OF THE PROPERTY DESCRIBED HEREON IN ACCORDANCE WITH SECTION 17-23-17 AND HEREBY CERTIFY ALL MEASUREMENTS AND DESCRIPTIONS ARE CORRECT. MONUMENTS WILL BE SET AS REPRESENTED ON THIS PLAT. I FURTHER CERTIFY THAT BY AUTHORITY OF THE HEREON OWNERS, I HAVE MADE A SURVEY OF THE TRACT OF LAND SHOWN ON THIS PLAT AND HAVE SUBDIVIDED THE SAME TRACT INTO PUBLIC STREETS, LOTS AND PUBLIC EASEMENTS TO BE HEREINAFTER KNOWN AS:

THE HILLS AT SANTA CLARA PHASE 2B

THAT THE SAME HAS BEEN CORRECTLY SURVEYED AND POINTS ESTABLISHED ON THE GROUND IN ACCORDANCE WITH THE HEREON LEGAL DESCRIPTION.

PROFESSIONAL LAND SURVEYOR
CERTIFICATE
3/24/16
4938716
BRANDON E. ANDERSON
STATE OF UTAH

DATE: 3/24/2016

BRANDON E. ANDERSON — CERTIFICATE NO. 4938716

LEGAL DESCRIPTION:

BEGINNING AT THE CENTER QUARTER CORNER OF SECTION 17, TOWNSHIP 42 SOUTH, RANGE 16 WEST, SALT LAKE BASE & MERIDIAN, AS MONUMENTED WITH A 1978 BRASS CAP, AND RUNNING;

THENCE NORTH 89°16'19" WEST 520.00 FEET ALONG THE CENTER SECTION LINE;
THENCE NORTH 01°20'11" EAST 368.18 FEET;
THENCE SOUTH 88°39'49" EAST 72.08 FEET;
THENCE NORTHEASTERLY 39.27 FEET ALONG AN ARC OF A 25.00 FOOT RADIUS CURVE TO THE LEFT (CENTER BEARS NORTH 01°20'11" EAST, LONG CHORD BEARS NORTH 46°20'14" EAST 35.35 FEET WITH A CENTRAL ANGLE OF 89°59'55");
THENCE NORTH 01°20'16" EAST 86.94 FEET;
THENCE NORTHERLY 26.17 FEET ALONG AN ARC OF A 165.50 FOOT RADIUS CURVE TO THE RIGHT (CENTER BEARS SOUTH 88°39'44" EAST, LONG CHORD BEARS NORTH 05°52'05" EAST 26.14 FEET WITH A CENTRAL ANGLE OF 09°03'39");
THENCE NORTH 88°39'49" WEST 99.15 FEET;
THENCE NORTH 01°20'11" EAST 216.89 FEET;
THENCE NORTH 70°27'24" EAST 111.96 FEET;
THENCE NORTH 59°32'01" EAST 83.90 FEET;
THENCE NORTH 63°05'04" EAST 222.73 FEET;
THENCE NORTH 58°03'45" EAST 18.78 FEET;
THENCE SOUTH 16°03'22" EAST 130.36 FEET;
THENCE EASTERLY 21.77 FEET ALONG AN ARC OF A 168.92 FOOT RADIUS CURVE TO THE RIGHT (CENTER BEARS SOUTH 17°19'13" EAST, LONG CHORD BEARS NORTH 76°22'20" EAST 21.76 FEET WITH A CENTRAL ANGLE OF 07°23'05");
THENCE NORTHEASTERLY 29.90 FEET ALONG AN ARC OF A 25.00 FOOT RADIUS CURVE TO THE LEFT (CENTER BEARS NORTH 09°56'08" WEST, LONG CHORD BEARS NORTH 45°48'01" EAST 28.15 FEET WITH A CENTRAL ANGLE OF 68°31'42") TO THE WESTERLY LINE OF THE HILLS AT SANTA CLARA PHASE 1B;
THENCE SOUTHERLY THE FOLLOWING (14) COURSES ALONG SAID WESTERLY LINE OF THE HILLS AT SANTA CLARA PHASE 1B;
THENCE SOUTHERLY 37.70 FEET ALONG AN ARC OF A 190.50 FOOT RADIUS CURVE TO THE LEFT (CENTER BEARS SOUTH 78°27'50" EAST, LONG CHORD BEARS SOUTH 05°52'00" WEST 37.64 FEET WITH A CENTRAL ANGLE OF 11°20'22");
THENCE SOUTH 00°11'49" WEST 112.61 FEET;
THENCE SOUTH 58°57'29" WEST 280.76 FEET;
THENCE SOUTH 01°20'16" WEST 209.89 FEET;
THENCE SOUTH 15°33'20" EAST 46.46 FEET;
THENCE SOUTH 53°23'28" EAST 62.15 FEET;
THENCE SOUTH 82°23'13" EAST 19.74 FEET;
THENCE SOUTH 89°15'25" EAST 166.68 FEET;
THENCE SOUTHERLY 50.29 FEET ALONG AN ARC OF A 165.50 FOOT RADIUS CURVE TO THE LEFT (CENTER BEARS NORTH 76°36'36" EAST, LONG CHORD BEARS SOUTH 22°05'40" EAST 50.09 FEET WITH A CENTRAL ANGLE OF 17°24'32");
THENCE SOUTH 30°47'56" EAST 20.83 FEET;
THENCE SOUTHWESTERLY 53.03 FEET ALONG AN ARC OF A 25.00 FOOT RADIUS CURVE TO THE RIGHT (CENTER BEARS SOUTH 59°12'04" WEST, LONG CHORD BEARS SOUTH 29°58'19" WEST 43.63 FEET WITH A CENTRAL ANGLE OF 121°32'31");
THENCE SOUTH 04°33'59" WEST 31.07 FEET;
THENCE SOUTHEASTERLY 56.55 FEET ALONG AN ARC OF A 35.00 FOOT RADIUS CURVE TO THE RIGHT (CENTER BEARS SOUTH 00°44'35" WEST, LONG CHORD BEARS SOUTH 42°58'11" EAST 50.60 FEET WITH A CENTRAL ANGLE OF 92°34'29");
THENCE SOUTHERLY 11.52 FEET ALONG AN ARC OF A 211.50 FOOT RADIUS CURVE TO THE LEFT (CENTER BEARS SOUTH 86°40'56" EAST, LONG CHORD BEARS SOUTH 01°45'27" WEST 11.52 FEET WITH A CENTRAL ANGLE OF 03°07'15");
THENCE SOUTH 89°48'07" EAST 50.00 FEET;
THENCE SOUTH 00°11'53" WEST 47.33 FEET TO THE CENTER SECTION LINE;
THENCE NORTH 89°15'11" WEST 54.66 FEET ALONG SAID CENTER SECTION LINE TO THE POINT OF BEGINNING.

CONTAINING 294,324 SQUARE FEET OR 6.76 ACRES.

NOTES:

1. ALL LOTS IN THIS SUBDIVISION ARE SUBJECT TO A 14.00 FOOT WIDE PUBLIC UTILITY, SIDEWALK AND DRAINAGE EASEMENT ALONG THE STREET, UNLESS OTHERWISE NOTED ON PLAN.
2. ALL LOTS IN THIS SUBDIVISION ARE SUBJECT TO A 20.00 FOOT FRONT YARD SETBACK, AN 8.00 AND 12.00 FOOT SIDE YARD SETBACK, AND A 10.00 FOOT REAR YARD SETBACK. GARAGE SETBACKS MUST BE A MINIMUM OF 20 FEET FROM THE BACK OF SIDEWALK.
3. NOT WITHSTANDING THE POSTING OF BOND FOR INSTALLATION OF OFF-SITE IMPROVEMENTS, NO BUILDING PERMIT WILL BE ISSUED FOR ANY LOT IN THIS SUBDIVISION UNTIL ALL UTILITIES ARE FULLY INSTALLED IN THE ENTIRE SUBDIVISION.
4. UNSTABLE SOIL CONDITIONS MIGHT EXIST ON LOTS IN THIS SUBDIVISION. PURCHASERS OF LOTS HEREIN HAVE THE SOLE RESPONSIBILITY FOR OBTAINING APPROPRIATE ENGINEERING SERVICES AND ADVICE RELATIVE TO THE USABILITY OF THE LOTS. THE CITY OF SANTA CLARA DISCLAIMS AND AND ALL RESPONSIBILITY FOR SUCH SOIL CONDITIONS, WATER CONTROL (SURFACE AND/OR SUBSURFACE), AND DRAINAGE CONTROL.
5. ALL STREET LANDSCAPING SHALL CONFORM TO SANTA CLARA CITY'S LANDSCAPE ORDINANCE.

GEOTECHNICAL INVESTIGATION:

A GEOTECHNICAL INVESTIGATION WAS PERFORMED BY GTS CONSULTING. THE INVESTIGATION RESULTS AND SPECIFIC RECOMMENDATIONS FOR THE CONSTRUCTION OF FOUNDATIONS, FLOOR SLABS AND EXTERIOR FLATWORK, ARE COMPILED IN A REPORT DATED AUGUST 20, 2012. THIS REPORT IS AVAILABLE FROM THE DEVELOPER AND A COPY IS ON FILE WITH SANTA CLARA CITY. OWNERS, BUILDERS AND CONTRACTORS SHOULD BECOME FAMILIAR WITH THIS REPORT AND COMPLY WITH ITS RECOMMENDATIONS.

THE HILLS AT SANTA CLARA
- P H A S E 2B -

LOCATED IN THE N.E. ¼ AND N.W. ¼ OF SECTION 17, TOWNSHIP 42 SOUTH, RANGE 16 WEST, SALT LAKE BASE AND MERIDIAN, SANTA CLARA CITY, WASHINGTON COUNTY, UTAH.

SHEET 1 OF 2

ROSENBERG ASSOCIATES
CIVIL ENGINEERS • LAND SURVEYORS
352 EAST RIVERSIDE DRIVE, SUITE A-2, ST. GEORGE, UTAH 84790 PH (435) 673-8586 FX (435) 673-8397 WWW.RACIVIL.COM

SURVEY-PH2B FP.dwg FILE NUMBER:	1/21/2016 DATE:	B.E.A. DRAWN:
7432-12-001 JOB NUMBER:	1" = 40' SCALE:	B.E.A. CHECKED:

ENGINEER'S APPROVAL:

THE HEREON SUBDIVISION HAS BEEN REVIEWED AND IS APPROVED IN ACCORDANCE WITH INFORMATION ON FILE IN THIS OFFICE, THIS 29th DAY OF March, 2016

ENGINEER
SANTA CLARA CITY, UTAH

APPROVAL OF THE PLANNING COMMISSION:

ON THIS THE 29th DAY OF March A.D. 2016 THE PLANNING COMMISSION OF SANTA CLARA CITY HAVING REVIEWED THE ABOVE SUBDIVISION FINAL PLAT AND HAVING FOUND THAT IT COMPLIES WITH THE REQUIREMENTS OF SANTA CLARA CITY'S PLANNING ORDINANCES, AND BY AUTHORIZATION OF SAID COMMISSION HEREBY APPROVE SAID SUBDIVISION FOR ACCEPTANCE BY SANTA CLARA CITY, UTAH.

CHAIRMAN OF THE PLANNING COMMISSION
SANTA CLARA CITY, UTAH

CITY SURVEYORS CERTIFICATE:

I THE SANTA CLARA CITY SURVEYOR, DO HEREBY VERIFY THAT THIS OFFICE HAS EXAMINED THIS SUBDIVISION PLAT AND HAVE DETERMINED THAT IT IS CORRECT AND IN ACCORDANCE WITH INFORMATION ON FILE IN THIS OFFICE.

CITY SURVEYOR
SANTA CLARA CITY, UTAH

APPROVAL AND ACCEPTANCE BY THE CITY OF SANTA CLARA, UTAH:

WE THE MAYOR AND CITY COUNCIL OF SANTA CLARA CITY, UTAH HAVE REVIEWED THE ABOVE SUBDIVISION FINAL PLAT AND BY AUTHORIZATION OF SAID CITY COUNCIL RECORDED IN THE MINUTES OF IT'S MEETING OF THE 23 DAY OF March A.D. 2016 HEREBY ACCEPT THE SAID SUBDIVISION WITH ALL COMMITMENTS AND ALL OBLIGATIONS PERTAINING THERETO.

CITY RECORDER — MAYOR
SANTA CLARA CITY, UTAH — SANTA CLARA CITY, UTAH

APPROVAL AS TO FORM:

APPROVED AS TO FORM, THIS 29th DAY OF April A.D. 2016

CITY ATTORNEY
SANTA CLARA CITY, UTAH

TREASURER APPROVAL

I, WASHINGTON COUNTY TREASURER, CERTIFY ON THIS 27 DAY OF April A.D. 2016 THAT ALL TAXES, SPECIAL ASSESSMENTS, AND FEES DUE AND OWING ON THIS SUBDIVISION FINAL PLAT HAVE BEEN PAID IN FULL.

WASHINGTON COUNTY TREASURER

RECORDED No.

DOC # 20160015048
Map (Conveying Property) Page 1 of 3
Russell Shirts Washington County Recorder
04/29/2016 02:58:28 PM Fee $ 40.00
By PERIGON SECURE TITLE

FEE: COUNTY RECORDER WASHINGTON COUNTY, UTAH

Unofficial Copy

Unofficial Copy

JIMMIE C ROSENBRUCH TRUST
ENTRY No. 7391-A-1

HILLS AT SANTA CLARA INC.
ENTRY No. 7393-A-1

EROSION HAZARD BOUNDARY JE FULLER DRAFT STUDY 2005

100 YEAR FLOODPLAIN MAP No. 49053C0768G APRIL 2, 2009

BUREAU OF LAND MANAGEMENT

SANTA CLARA RIVER

COLBEY LOOP

COLBEY LOOP NORTH

BOOMERS LOOP WEST

BOONE PARK CIRCLE

(PUBLIC STREET)

THE HILLS AT SANTA CLARA PHASE 1B

LOT 201 13,161 SQ. FT. 0.30 ACRES
LOT 202 13,300 SQ. FT. 0.31 ACRES
LOT 203 13,267 SQ. FT. 0.31 ACRES
LOT 205 16,737 SQ. FT. 0.38 ACRES
LOT 206 14,034 SQ. FT. 0.32 ACRES
LOT 207 13,391 SQ. FT. 0.31 ACRES
LOT 210 13,186 SQ. FT. 0.30 ACRES
LOT 211 16,208 SQ. FT. 0.37 ACRES
LOT 212 13,268 SQ. FT. 0.31 ACRES
LOT 213 12,472 SQ. FT. 0.29 ACRES
LOT 214 11,527 SQ. FT. 0.26 ACRES
LOT 215 11,418 SQ. FT. 0.26 ACRES
LOT 224 10,291 SQ. FT. 0.24 ACRES
LOT 225 10,272 SQ. FT. 0.24 ACRES
LOT 226 10,327 SQ. FT. 0.24 ACRES
LOT 227 10,319 SQ. FT. 0.24 ACRES
LOT 228 10,155 SQ. FT. 0.23 ACRES
LOT 229 13,486 SQ. FT. 0.31 ACRES
LOT 231 12,801 SQ. FT. 0.29 ACRES
LOT 232 12,811 SQ. FT. 0.29 ACRES
LOT 117
LOT 118
LOT 119
LOT 120
LOT 121
LOT 122
LOT 123
LOT 136
LOT 137
LOT 138
LOT 139
LOT 216

P.O.B.
CENTER QUARTER CORNER SECTION 17 T.42S., R.16W., S.L.B.&M. WASHINGTON COUNTY BRASS CAP (1978)

QUARTER CORNER SECTIONS 16-17 T.42S., R.16W., S.L.B.&M. ALPHA ENGINEERING CO. REBAR AND CAP HCN No. 4069

NORTH QUARTER CORNER SECTION 17 T.42S., R.16W., S.L.B.&M. 1968 B.L.M. BRASS CAP HCN No. 4058

NORTHEAST QUARTER CORNER SECTION 17 T. 42 S. R.16 W. S.L.B.&M. 1968 B.L.M. BRASS CAP H.C.N. No. 4068

BASIS OF BEARING

LEGEND:

- SET CORNER - 5/8" X 20" REBAR & PLASTIC CAP - ROSENBERG ASSOCIATES
- NOTHING SET OR FOUND
- FOUND SECTION MONUMENTATION AS SHOWN AND DESCRIBED
- TO BE SET STANDARD SANTA CLARA CITY SURVEY MONUMENT - CLASS I
- FOUND STANDARD SANTA CLARA CITY SURVEY MONUMENT - CLASS I
- FRONT PROPERTY CORNERS ARE OFFSET 7.0' WITHIN THE LOT, ON LINE, IN THE SIDEWALK, WITH A BRASS PLUG
- FOUND STANDARD CITY SURVEY MONUMENT - CLASS II
- TO BE SET STANDARD CITY SURVEY MONUMENT - CLASS II
- POWER LINE EASEMENT ENTRY No. 274765
- TRAIL AND FLOOD CONTROL EASEMENT

LINE TABLE

LINE	LENGTH	DIRECTION
L1	17.43'	S 89°15'25" E
L2	12.50'	S 79°43'38" E
L3	12.50'	S 79°43'38" E
L4	12.50'	S 89°15'25" E
L5	24.45'	S 89°48'11" E
L6	15.46'	N 89°48'11" W
L7	27.93'	S 57°04'32" W
L8	41.13'	N 15°42'28" E
L9	24.58'	S 57°04'32" W

CURVE TABLE

CURVE	LENGTH	RADIUS	DELTA
C10	39.27'	25.00'	90°00'05"
C11	78.71'	165.50'	27°15'02"
C12	64.82'	165.50'	22°26'31"
C13	26.64'	165.50'	9°13'22"
C14	91.51'	165.50'	31°40'46"
C15	18.94'	134.50'	8°04'01"
C16	3.43'	134.50'	1°27'46"
C17	27.53'	165.50'	9°31'47"
C18	22.37'	134.50'	9°31'47"
C19	27.53'	165.50'	9°31'47"

CURVE TABLE

CURVE	LENGTH	RADIUS	DELTA
C20	67.57'	134.50'	28°47'03"
C21	145.10'	134.50'	61°48'39"
C22	30.19'	134.50'	12°51'43"
C23	105.07'	134.50'	44°45'30"
C24	74.75'	165.50'	25°52'41"
C25	65.52'	165.50'	22°40'54"
C26	31.79'	165.50'	11°00'17"
C27	29.44'	165.50'	10°11'35"
C28	77.71'	141.15'	31°32'35"
C29	48.22'	25.00'	110°30'34"

CURVE TABLE

CURVE	LENGTH	RADIUS	DELTA
C30	74.39'	168.92'	25°14'01"
C31	27.92'	168.92'	9°28'10"
C32	49.76'	134.50'	21°11'52"

ROSENBERG ASSOCIATES
CIVIL ENGINEERS • LAND SURVEYORS
352 EAST RIVERSIDE DRIVE, SUITE A-2, ST. GEORGE, UTAH 84790 PH (435) 673-8586 FX (435) 673-8397, WWW.RACIVIL.COM

SURVEY-PH2B FP.DWG FILE NUMBER:	1/27/2016 DATE:	B.E.A. DRAWN:
7432-12-001 JOB NUMBER:	1" = 40' SCALE:	B.E.A. CHECKED:

THE HILLS AT SANTA CLARA
- PHASE 2B -

LOCATED IN THE N.E. ¼ AND N.W. ¼ OF SECTION 17, TOWNSHIP 42 SOUTH, RANGE 16 WEST, SALT LAKE BASE AND MERIDIAN, SANTA CLARA CITY, WASHINGTON COUNTY, UTAH.

SHEET 2 OF 2

Mayor
Rick Rosenberg

City Manager
Brock Jacobsen

CITY OF
SANTA CLARA
FOUNDED 1854

City Council
Jarett Waite
Ben Shakespeare
Christa Hinton
Janene Burton
Dave Pond

CITY COUNCIL

Meeting Date: 10/Apr/24 **Agenda Item:** 3

Applicant: N/A **Requested by:** Dustin Mouritsen

Subject: Slurry Seal Streets Maintenance

Project

Description:

Consider approval of the spring slurry seal project to the low bidder Asphalt Preservation for .17 cents per sq. ft. for 1,839,008 sq. ft. of type II slurry seal for $312,631.36. We only received 2 bids and the other was Morgan Pavement at .189 cents for $347,522.51.

Recommendation:
Approval **Cost:** N/A

Attachments: N/A

Legal Approval: Yes

Finance Approval: Yes

Budget Approval: Yes

2603 Santa Clara Drive, Santa Clara,
Utah 84765 Phone (435) 673-6712 Fax
(435) 628-7338

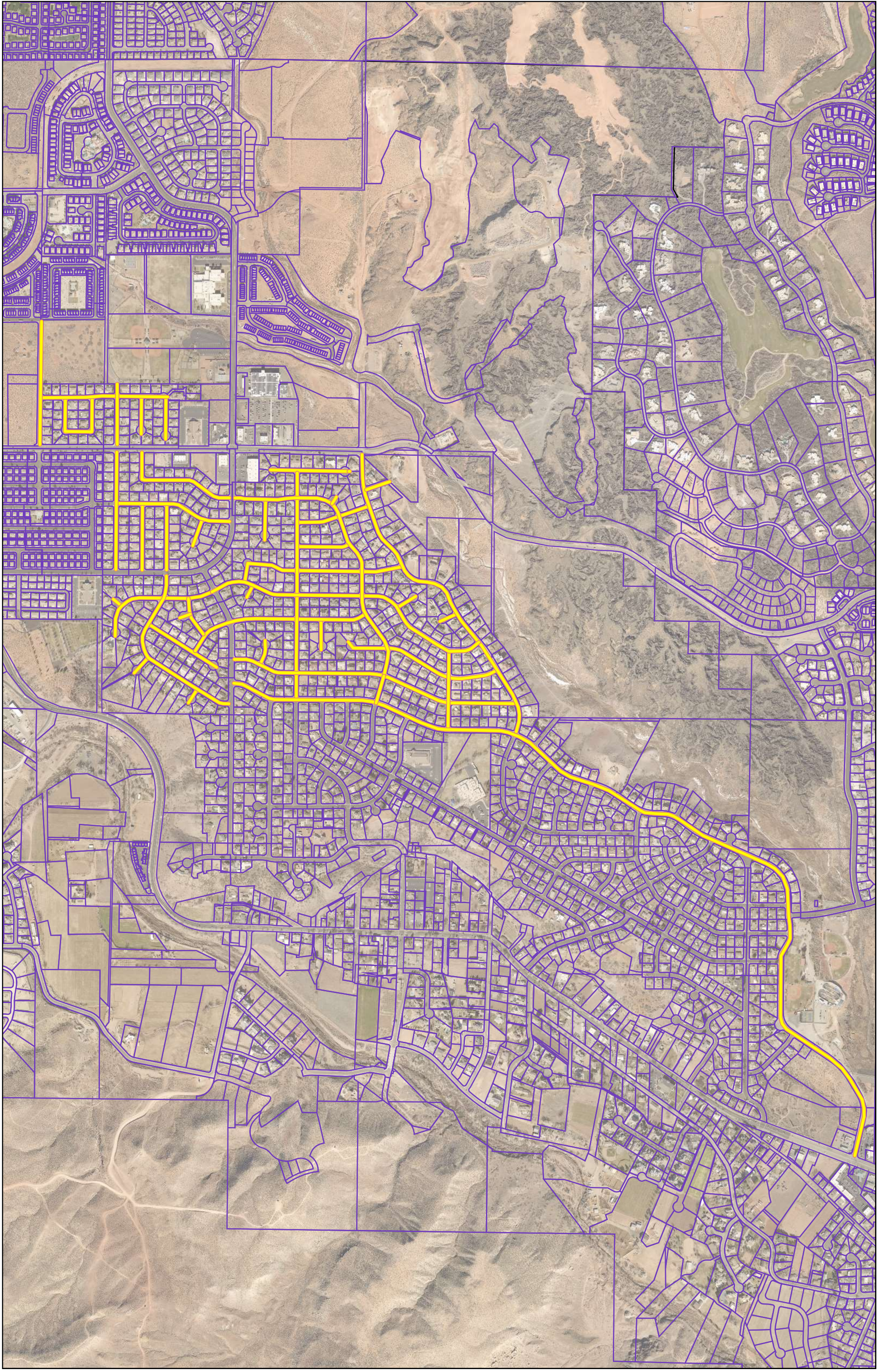

CRACK SEAL/SLURRY SEAL 2023/2024

STREET NAME	LENGTH	WIDTH	SQ. FT.	COST	
PATRICIA DR	1261	35	44,135		
NICHOLAS DR	1276	35	44,160		
JULIE DR	960	35	33,160		
JOSHUA CIR	374	35	13,090		
BRYSON CIR	445	35	15,575		
JACOB DR	1803	35	63,105		
BLAKE	680	35	23,800		
RIMVIEW	2611	35	91,385		
MITCHELL	1437	35	50,295		Jacob to Rachel
SAGEBRUSH	1233	35	152,343		All of Sagebrush
BLAIR CIR	262	35	9,170		
HOLLAND CIR	61	35	2,135		
WINDMILL	1297	35	45,395		
VALLEY VIEW CIR	200	35	7,000		
RIMVIEW CIR	130	35	4,550		
DOVE	530	35	18,550		
ALPINE	900	35	31,500		
ROBBIN CT	900	35	31,500		
RED MESA	370	35	12,950		
ADOBE DR	704	35	24,640		
SERENITY	506	35	17,710		
RED BUTTE	1751	35	61,285		
CANYON VIEW	9500	45	427,500		
WINDMILL	3000	35	105000		Entire distance
WINDMILL CIR	200	35	7000		
DUTCH CIR	125	35	4375		
CHALET DR	2000	35	70000		
CHALET CIR	300	35	10500		
SWISS CIR	230	35	8050		
RAINBOW	2315	35	81025		Robbin Ct to Canyon View
SWISS	3000	35	105000		
DUTCHMAN	1625	35	56875		
CACTUS	775	35	27125		
VIEWPOINT CIR	195	35	6825		
RED MTN	3525	35	123375		Pioneer to Canyon View
SANDY COVE	255	35	8925		
		Total Sq Ft	**1,839,008**		

DOCUMENT 00 43 13
BIDDER'S BOND

KNOW ALL MEN BY THESE PRESENTS, THAT WE Asphalt Preservation LLP

as PRINCIPAL, and Employers Mutual Casualty Company
as SURETY, are held and firmly bound unto CITY OF SANTA CLARA, UTAH, hereinafter referred to as the "City," and the "Obligee" in the penal sum of **5 percent** of the total amount of the bid as the Principal above-named, submitted by said Principal to said City, for the work described below, for the payment of which sum in lawful money of the United States of America, well and truly to be made, we bind ourselves, our heirs, executors, administrators and successors, jointly and severally, firmly by these presents.

THE CONDITIONS OF THIS OBLIGATION ARE SUCH, that whereas, said Principal has submitted the above-mentioned bid to said City for construction of **2024 Spring Pavement Maintenance Contract**, for which bids are to be opened at the Ivins City, 85 North Main Street, Ivins, Utah 84738.

NOW, THEREFORE, if said Principal is awarded the contract and, within the time and manner required under the heading "Instruction to Bidders," after the prescribed forms are presented to him for signature, enters into a written contract, in the form of agreement bound herein, in accordance with the bid, and files the required Bond with said City to guarantee faithful performance, then his obligation shall be null and void, otherwise it shall be and remain in full force and effect. In the event suit is brought upon this Bond by the Obligee and judgment is recovered, said surety shall pay all costs incurred by the Obligee in such suit, including a reasonable attorney's fee to be fixed by the Court.

IN WITNESS WHEREOF, we have hereunto set our hands and seals this 26th day of March, 2024.

Asphalt Preservation LLP	Employers Mutual Casualty Company
Principal	Surety
By Fernando Ramos	By Stacie Hanson
(SEAL)	(SEAL)

EMPLOYERS MUTUAL CASUALTY CO. CORPORATE SEAL DES MOINES, IOWA

P.O. Box 712 • Des Moines, Iowa 50306-0712

EMC INSURANCE

POWER OF ATTORNEY APPOINTING INDIVIDUAL ATTORNEY-IN-FACT

KNOW ALL MEN BY THESE PRESENTS, that:

1. Employers Mutual Casualty Company, an Iowa Corporation
2. EMCASCO Insurance Company, an Iowa Corporation
3. Union Insurance Company of Providence, an Iowa Corporation
4. Illinois EMCASCO Insurance Company, an Iowa Corporation
5. Dakota Fire Insurance Company, a North Dakota Corporation
6. EMC Property & Casualty Company, an Iowa Corporation

hereinafter referred to severally as "Company" and collectively as "Companies", each does, by these presents, make, constitute and appoint:

STACIE HANSON

its true and lawful attorney-in-fact, with full power and authority conferred to sign, seal, and execute the Bid Bond

Any and All Bonds

and to bind each Company thereby as fully and to the same extent as if such instruments were signed by the duly authorized officers of each such Company, and all of the acts of said attorney pursuant to the authority hereby given are hereby ratified and confirmed.

AUTHORITY FOR POWER OF ATTORNEY

This Power-of-Attorney is made and executed pursuant to and by the authority of the following resolution of the Boards of Directors of each of the Companies at the first regularly scheduled meeting of each company duly called and held in 1999:

RESOLVED: The President and Chief Executive Officer, any Vice President, the Treasurer and the Secretary of Employers Mutual Casualty Company shall have power and authority to (1) appoint attorneys-in-fact and authorize them to execute on behalf of each Company and attach the seal of the Company thereto, bonds and undertakings, recognizances, contracts of indemnity and other writings obligatory in the nature thereof; and (2) to remove any such attorney-in-fact at any time and revoke the power and authority given to him or her. Attorneys-in-fact shall have power and authority, subject to the terms and limitations of the power-of-attorney issued to them, to execute and deliver on behalf of the Company, and to attach the seal of the Company thereto, bonds and undertakings, recognizances, contracts of indemnity and other writings obligatory in the nature thereof, and any such instrument executed by any such attorney-in-fact shall be fully and in all respects binding upon the Company. Certification as to the validity of any power-of-attorney authorized herein made by an officer of Employers Mutual Casualty Company shall be fully and in all respects binding upon this Company. The facsimile or mechanically reproduced signature of such officer, whether made heretofore or hereafter, wherever appearing upon a certified copy of any power-of-attorney of the Company, shall be valid and binding upon the Company with the same force and effect as though manually affixed.

IN WITNESS THEREOF, the Companies have caused these presents to be signed for each by their officers as shown, and the Corporate seals to be hereto affixed this 30th day of March , 2020 .

Seals

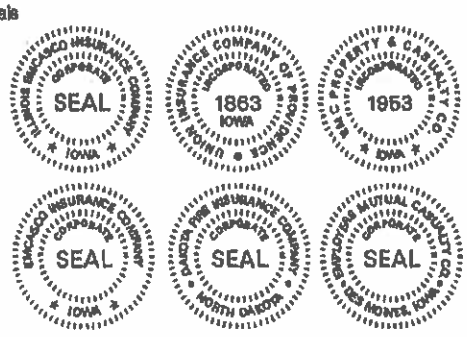

Scott R. Jean, President & CEO of Company 1; Chairman, President & CEO of Companies 2, 3, 4, 5 & 6

Todd Strother, Executive Vice President Chief Legal Officer & Secretary of Companies 1, 2, 3, 4, 5 & 6

On this 30th day of March , 2020 before me a Notary Public in and for the State of Iowa, personally appeared Scott R. Jean and Todd Strother, who, being by me duly sworn, did say that they are, and are known to me to be the CEO, Chairman, President, Executive Vice President, Chief Legal Officer and/or Secretary, respectively, of each of the Companies above; that the seals affixed to this instrument are the seals of said corporations; that said instrument was signed and sealed on behalf of each of the Companies by authority of their respective Boards of Directors; and that the said Scott R. Jean and Todd Strother, as such officers, acknowledged the execution of said instrument to be their voluntary act and deed, and the voluntary act and deed of each of the Companies.

My Commission Expires October 10, 2022.

Kathy Loveridge

Notary Public in and for the State of Iowa

CERTIFICATE

I, James D. Clough, Vice President of the Companies, do hereby certify that the foregoing resolution of the Boards of Directors by each of the Companies, and this Power of Attorney issued pursuant thereto on 30th day of March , 2020 , are true and correct and are still in full force and effect.

In Testimony Whereof I have subscribed my name and affixed the facsimile seal of each Company this 26th day of March , 2024 .

Vice President

CITY OF SANTA CLARA
2603 SANTA CLARA DRIVE
SANTA CLARA, UTAH 84765
(435) 673-6712 office
(435) 628-7338 fax

2024 SPRING PAVEMENT MAINTENANCE CONTRACT
BID SCHEDULE: Slurry Seal

The following Bid Schedule is used for determining unit prices for slurry seal. The slurry seal shall be applied in accordance with the International Slurry Surfacing Association (ISSA) Recommended Performance Guideline for Emulsified Asphalt Slurry Seal A105 (dated February 2010) as attached.

Item	Description	Quantity	Unit	Unit Price	Total
1	Slurry Seal Type II with 3% latex, apply at 15 to 18 lbs per sy	1,839,008	sf	$0.17	$312,631.36
				Total Bid Price:	$312,631.36

Abbreviations: sf-square feet, lbs-pounds

Name of Contractor: Asphalt Preservation

Signature: _____ **Date:** 3/26/2024

Print Name: Kenneth Kladden **Phone:** (385) 368-5278

By submitting and signing this, contractor certifies that it does not and will not, during the performance of this contract, knowingly employ or subcontract with any entity which employs workers in violation of 8 U.S.C. §1324a. Contractor agrees to produce, at the City's request, such documents which are required to verify compliance with applicable federal and state laws. If the contractor knowingly employs workers in violation of 8 U.S.C. §1324a, such violation shall be cause for unilateral cancellation of the contract between contractor and the City. In the event this contract is terminated due to violation of 8 U.S.C. §1324a by the contractor or by a subcontractor of the contractor, the contractor shall be liable for any and all costs associated with such termination including, but not limited to, any damages incurred by the City, as well as attorney's fees.

2024 PAVEMENT MAINTENANCE CONTRACT
INFORMATION REQUIRED OF BIDDER

The Bidder is required to supply the following information. Additional sheets may be attached if necessary.

(1) Bidder Asphalt Preservation

(2) Address 3490 W 3300 S, Building A, Unit 4, West Haven, UT 84401

(3) Telephone (385) 389-2927

(4) Utah Contractor's License No. 10455610-5501

(5) Contractor's License Class: B100, E100 Monetary Limit: $10,000,000.00+

(6) Type of Bidder: ___ Individual X Partnership ___ Firm

___ Company ___ Corporation ___ Association

(7) Corporation organized under the laws of the state of _____

(8) List the names, titles, and addresses of all principals and/or officers of the individual, partnership, firm, LLC, company, corporation or associations.

Fernando Gama, Operations Manager, 5932 S 4300 W, Hooper, UT 84315

Tiffany Gama, Office Manager, 3507 S 2700 W, West Haven, UT 84401

Jose Gama, Superintendent, 3507 S 2700 W, West Haven, UT 84401

(9) Number of years experience as a contractor in construction work of this type: 9 Years

(10) List at least three similar projects completed as of a recent date:

Project Name: ***see attached	statement of qualifications***	Contract Price:	
Owner Name:		Phone Number:	
Slurry Quantity (sy):			

Project Name:		Contract Price:	
Owner Name:		Phone Number:	
Slurry Quantity (sy):			

2024 PAVEMENT MAINTENANCE CONTRACT
INFORMATION REQUIRED OF BIDDER

Project Name:		Contract Price:	
Owner Name:		Phone Number:	
Slurry Quantity (sy):			

(11) List Equipment available to Contractor:

Number of Slurry Surface Machines owned by Contractor: 6

Number of Slurry Surface Machines to be used on this project: 3

Description of Slurry Surface Machines to be used on this project (Make, Model, Size, Year and other pertinent data):

2000 Peterbilt w/ truck mounted 2000 Bergkamp M2 Paver 12 Cu. Yds.

2001 Peterbilt w/ truck mounted 2001 Bergkamp M2 Paver 12 Cu. Yds.

2021 Freightliner w/ truck mounted 2021 Bergkamp M2 Paver 12 Cu. Yds.

Description of sweeper to be used on this project: 2006 Isuzu Tymco 435 Sweeper

List any other equipment that will be used for this project:

2012 Peterbilt tractor-trailer tanker combination

2006 Peterbilt Dump Truck w/ transport trailer

2006 Komatsu 3 yd front end loader

2022 Ford F550 w/ custom slurry box trailer CPM slurry box

2019 Ford F550 w/ traffic control trailer

2017 Ford F350 w/ enclosed box trailer w/ cleaning equipment

(12) Material source and laboratory evaluating mix design

Asphalt Emulsion Source: Peak Asphalt, Woods Cross, UT

Asphalt Emulsion Type: CQS-1HLM 3%

Aggregate Source: Sunroc, Blackrock Pit

Laboratory evaluating mix design: Peak Asphalt, North Salt Lake Lab

(13) Crew Foreman

Name of crew foreman designated for this project: Jose Angulo

Name of 2nd crew foreman (if needed) designated for this project: N/A

2024 PAVEMENT MAINTENANCE CONTRACT
INFORMATION REQUIRED OF BIDDER

List at least three prior projects that crew foreman has completed working as a foreman:

Project Name:	Saratoga Springs 2023 Road Maintenance	Contract Price:	$819,016.00
Owner Name:	Saratoga Springs City	Phone Number:	(385) 335-0237
Slurry Quantity (sy):	521,000 SY Type II, CQS-1HLM 3%		

Project Name:	Sandy City 2023 Slurry Seal	Contract Price:	$907,854.42
Owner Name:	Sandy City Corporation	Phone Number:	(801) 835-1114
Slurry Quantity (sy):	402,956 SY Type II, CQS-1HLM 3% 203,434 SY Type III, CQS-1HLM 3%		

Project Name:	Herriman City 2022 Asphalt Preservation	Contract Price:	$542,182.49
Owner Name:	Herriman City	Phone Number:	(801) 727-0953
Slurry Quantity (sy):	213,910 SY Type II, CQS-1HLM 3% 100,156 SY Type III, CQS-1HLM 3%		

List at least three prior projects that 2nd crew foreman (if needed) has completed working as a foreman:

Project Name:		Contract Price:	
Owner Name:		Phone Number:	
Slurry Quantity (sy):			

Project Name:		Contract Price:	
Owner Name:		Phone Number:	
Slurry Quantity (sy):			

Project Name:		Contract Price:	
Owner Name:		Phone Number:	
Slurry Quantity (sy):			

STATEMENT OF QUALIFICATIONS OVER $500K

ASPHALT PRESERVATION

Project: Santa Clara 2024 Pavement Maintenance

Owner: City of Santa Clara
2603 Santa Clara Drive
Santa Clara, UT 84765

The undersigned certifies that the information provided herein is true and sufficiently complete and accurate.

Company: Asphalt Preservation

Office Address: 3490 West 3300 South
Building A, Unit 4
West Haven, UT 84401

Office Phone: (385) 389-2927

Sign: Fernando Gama

Name: Fernando Gama

Title: Partner/Operations Manager

Date: 3/26/24

WORK EXPERIENCE

PROJECT INFORMATION	DESCRIPTION OF WORK	REFERENCES
Saratoga Springs Road Maintenance Contract Date: Apr. 6, 2023 Saratoga Springs, UT Contract Amount: $819,016.00 w/ change orders: $819,016.00 Completion Date: Aug. 31, 2023	521,000 SY of Slurry Seal Type II, CQS-1HLM 3% on city streets. 25 Tons of Crack Seal, Elastoflex 650 on city streets. 3,850 SF of Removal & Replace of Asphalt Patching, 3" Hot Mix Asphalt. Equipment: Truck mounted Bergkamp M2 paving machines with slurry seal box. Bearcat crack seal kettles w/ truck mounted air compressor system. Litigation: N/A	Colt Peterson Streets Supervisor Public Works Saratoga Springs City, UT (801) 766-6506
Sandy City Slurry Seal Contract Date: Mar. 16, 2023 Sandy City, UT Contract Amount: $756,557.95 w/ change orders: $907,854.42 Completion Date: Jul. 1, 2023	3,626,608 SF of Slurry Seal Type II, CQS-1HLM 3% on city streets. 1,830,912 SF of Slurry Seal Type III, CQS-1HLM 3% on city streets & lots. Equipment: Truck mounted Bergkamp M2 paving machines with slurry seal box. Cleaning of streets conducted by ground crew personel and street sweepers. Traffic control conducted by experienced and certified T.C. crews. Litigation: N/A	Dave Marble Inspection Manager Public Works Sandy City, UT (801) 835-1114
Herriman City Slurry Seal Contract Date: Mar. 24, 2022 Herriman, UT Contract Amount: $542,182.49 w/ change orders: $542,182.49 Completion Date: Oct. 12, 2022	1,925,195 SF of Slurry Seal Type II, CQS-1HLM 3% and 901,405 SF of Slurry Seal Type III, CQS-1HLM 3% on city street. Equipment: Truck mounted Bergkamp M2 paving machines with slurry seal spreader box with hydraulically driven augers. Cleaning of streets conducted by ground crew and TYMCO street sweeper Litigation: N/A	Justun Edwards Director Public Works Herriman City, UT (801) 727-0953
Green River Cape Seal Contract Date: May 18, 2022 Green River, WY Contract Amount: $577,629.45 w/ change orders: $577,634.25 Completion Date: Aug. 25, 2022	57,868 SY of Cape Seal Slurry Seal Type II, CQS-1HLM 3% on streets. Equipment: Truck mounted Bergkamp M2 paving machines with slurry seal spreader box with hydraulically driven augers. Cleaning of streets conducted by ground crew and TYMCO street sweeper. Traffic control conducted by experienced T.C. crew. Litigation: N/A	Andy Hooten City Engineer Public Works Green River City, UT (307) 872-0524

Lewiston City Slurry Seal Contract Date: Apr. 25, 2022 Lewiston City, ID Contract Amount: $534,033.82 w/ change orders: $543,075.19 Completion Date: Aug. 15, 2022	254,252 SY of Slurry Seal Type II, CQS-1HLM 3% on city streets and city parking lots. Equipment: Truck mounted Bergkamp M2 paving machines with slurry seal spreader box with hydraulically driven augers. Cleaning of streets conducted by ground crew and TYMCO street sweeper. Litigation: N/A	Alannah Bailey Principal Engineer Public Works Lewistion City, ID (209) 746-1316
Mapleton City Slurry Seal Contract Date: Apr. 13, 2021 Mapleton, UT Contract Amount: $594,993.74 w/ change orders: $594,993.74 Completion Date: May 30, 2022	488,591 SY of Slurry Seal Type II, CQS-1HLM 3% on city streets. Equipment: Truck mounted Bergkamp M2 paving machines with slurry seal spreader box with hydraulically driven augers. Cleaning of streets conducted by ground personnel and TYMCO street sweeper and traffic control conducted by experienced T.C. crew. Litigation: N/A	Steve Lord Director Public Works Mapleton City, UT (801) 850-8965
Promontory Club Asphalt Maintenance Contract Date: Apr 6, 2021 Park City, UT Contract Amount: $539,128.00 w/ change orders: $512,085.93 Completion Date: Jun 26, 2021	282,000 SY of Slurry Seal Type II CQS-1H on private roads using truck mounted Bergkamp M2 paving machines with slurry seal spreader box with hydraulically driven augers. 30 Tons of crack seal on private roads using Bearcat Kettles. 329,645 SF of Seal Coat on parking lots. Litigation: N/A	Darrin Nielsen Operations Director Promontory Conservancy Park City, UT (801) 870-6374
St. George Slurry Seal Project Contract Date: Aug 20, 2020 St. George, UT Contract Amount: $531,950.00 w/ change orders: $609,710.00 Completion Date: Oct 28, 2020	450,000 SY of Slurry Seal Type II CQS-1HLM 3% on city streets. Equipment: Truck mounted Bergkamp M2 paving machines with slurry seal spreader box with hydraulically driven augers. Cleaning of streets conducted by ground personnel and TYMCO street sweeper and traffic control conducted by experienced T.C. crew. Litigation: N/A	Jay Sandberg City Engineer Public Works St. George City, UT (435) 627-4122
City Wide Slurry Seal Project Contract Date: Jun. 5, 2020 Cottonwood Heights, UT Contract Amount: $493,709.00 w/ change orders: $514,188.67 Completion Date: Sept 10, 2020	427,777 SY of Slurry Seal Type II CQS-1HLM 3% on city streets. Equipment: Truck mounted Bergkamp M2 paving machines with slurry seal spreader box with hydraulically driven augers. Cleaning of streets conducted by ground personnel and TYMCO street sweeper and traffic control conducted by experienced T.C. crew. Litigation: N/A	Mike Allen City Inspector Public Works Cottonwood Heights City, UT (801) 502-3949

STATEMENT OF QUALIFICATIONS UNDER $500K

ASPHALT PRESERVATION

Project: Santa Clara 2024 Pavement Maintenance

Owner: City of Santa Clara
2603 Santa Clara Drive
Santa Clara, UT 84765

The undersigned certifies that the information provided herein is true and sufficiently complete and accurate.

Company: Asphalt Preservation

Office Address: 3490 West 3300 South
Building A, Unit 4
West Haven, UT 84401

Office Phone: (385) 389-2927

Sign: Fernando Gama

Name: Fernando Gama

Title: Partner/Operations Manager

Date: 3/26/24

WORK EXPERIENCE

PROJECT INFORMATION	DESCRIPTION OF WORK	REFERENCES
Riverton, WY Pavement Preservation Contract Date: May 24, 2023 Riverton, WY Contract Amount: $209,870.80 w/ change orders: $209,870.80 Completion Date: Aug. 18, 2023	71,380 SY of Slurry Seal Type II, CQS-1HLM 3% on city roads. Equipment: Truck mounted Bergkamp M2 paving machines with slurry seal spreader box with hydraulically driven augers. Cleaning of streets conducted by ground crew and street sweepers. Traffic control conducted by experienced and certified T.C. crew. Litigation: N/A	Dustin Welch Area Manager 71 Construction Riverton, WY (307) 850-2171
Powell, WY Slurry Seal Contract Date: Jul. 5, 2023 Powell, WY Contract Amount: $272,025.00 w/ change orders: $272,025.00 Completion Date: Aug. 15, 2023	135,000 SY of Slurry Seal Type III, CQS-1HLM 2% on city roads. Equipment: Truck mounted Bergkamp M2 paving machines with slurry seal spreader box with hydraulically driven augers. Cleaning of streets conducted by ground crew and street sweepers. Traffic control conducted by experienced and certified T.C. crew. Litigation: N/A	Andy Metzler Superintendent Streets Department Powell, WY (307-754-6951
Rexburg, ID Slurry Seal Contract Date: Apr. 6, 2023 Rexburg, ID Contract Amount: $135,520.00 w/ change orders: $135,520.00 Completion Date: Jul. 29, 2023	77,000 SY of Slurry Seal Type III, CQS-1H on city roads. Equipment: Truck mounted Bergkamp M2 paving machines with slurry seal spreader box with hydraulically driven augers. Cleaning of streets conducted by ground crew and street sweepers. Traffic control conducted by experienced and certified T.C. crew. Litigation: N/A	Joel Gray Asst. City Engineer Engineering Department Rexburg, ID (208) 359-3020
Wasatch County Asphalt Maintenance Contract Date: Mar. 1, 2023 Wasatch County, UT Contract Amount: $167,553.65 w/ change orders: $167,553.65 Completion Date: Jul. 31, 2023	78,175 SY of Slurry Seal Type III, CQS-1H on county roads and lots. Equipment: Truck mounted Bergkamp M2 paving machines with slurry seal spreader box with hydraulically driven augers. Cleaning of streets conducted by ground personel and street sweepers. Traffic control conducted by experienced and certified T.C. crew. Litigation: N/A	Brenden Van Der Stappen Project Manager Advanced Paving Ogden, UT (801) 690-6758

Summit County Slurry Seal Contract Date: Feb. 22, 2023 Summit County, UT Contract Amount: $300,233.00 w/ change orders: $286,740.97 Completion Date: Jun. 30, 2023	120,995 SY of Slurry Seal Type III, CQS-1H on county roads. 21 Tons of crack seal Elastoflex 61 on county roads. Equipment: Truck mounted Bergkamp M2 paving machines with slurry seal spreader box with hydraulically driven augers. BearCat crack seal kettles w/ truck-mounted air systems. Litigation: N/A	Spencer Neilson Engineer Engineering Department Summit County, UT (435) 336-3291
Woods Cross Slurry Seal Contract Date: Feb. 9, 2023 Woods Cross, UT Contract Amount: $87,618.75 w/ change orders: $88,983.75 Completion Date: May 11, 2023	428,050 SF of Slurry Seal Type III, CQS-1H on city streets. Equipment: Truck mounted Bergkamp M2 paving machines with slurry seal spreader box with hydraulically driven augers. Cleaning of streets conducted by ground personel and street sweepers. Traffic control conducted by experienced and certified T.C. crew. Litigation: N/A	Sam Christiansen Director Public Works Woods Cross City, UT (801) 677-1020
The Colony Asphalt Maintenance Contract Date: May 21, 2022 Park City, UT Contract Amount: $360,490.81 w/ change orders: $332,248.69 Completion Date: Sept. 21, 2022	1,317,709 SF of Micro-Surface Seal Type III, CQS-1P SLR on roads. Equipment: Truck mounted Bergkamp M2 paving machines with micro-surface seal hydraulically adjustable spreader box with hydraulically driven dual augers. Cleaning of roads conducted by ground personnel and TYMCO street sweeper. Litigation: N/A	Joe Fiducia Operations Manager The Colony HOA Park City, UT (435) 602-2875
Douglas City Fall Slurry Seal Contract Date: Jul. 25, 2022 Douglas, WY Contract Amount: $410,817.80 w/ change orders: $407,817.80 Completion Date: Sept. 15, 2022	166,660 SY of Slurry Seal Type III, CQS-1HLM 2% on city streets. Equipment: Truck mounted Bergkamp M2 paving machines with slurry seal spreader box with hydraulically driven augers. Cleaning of streets conducted by ground crew personnel and TYMCO street sweeper and traffic control conducted by experience T.C. crew. Litigation: N/A	Steve Martinez Director Public Works Douglas City, WY (307) 351-1029
Plain City Slurry Seal Contract Date: June 24, 2022 Plain City, UT Contract Amount: $145,386.88 w. change orders: $145,386.88 Completion Date: Sept. 6, 2022	759,545 SF of Slurry Seal Type II, CQS-1H on city streets. 6.3 Tons of Crack Seal, Elastoflex 650 on city streets. Equipment: Truck mounted Bergkamp M2 paving machines with slurry seal spreader box with hydraulically driven augers. BearCat crack seal kettles w/ truck-mounted air systems. Litigation: N/A	Caden Anderson Partner/Manager Andersen Asphalt Ogden, UT (435) 881-8637
Clinton City Slurry Seal Contract Date: Apr. 20, 2022 Clinton, UT Contract Amount: $197,064.00 w/ change orders: $22,706.35 Completion Date: Aug. 31, 2022	156,400 SY of Slurry Seal Type II, CQS-1H on city streets. 32,165 SY of Cape Seal Slurry Seal Type II, CQS-1H on city streets. Equipment: Truck mounted Bergkamp M2 paving machines with slurry seal spreader box with hydraulically driven augers. Cleaning of streets conducted by ground crew and street sweeper. Litigation: N/A	Gregg Folk Streets Supervisor Public Works Clinton City (801) 941-1133
Price City 2022 Cape Seal Contract Date: Mar. 1, 2022 Price, UT Contract Amount: $231,957.00 w/ change orders: $231,957.00 Completion Date: Aug. 23, 2022	85,910 SY of Slurry Seal, Type II CQS-1HLM 2% on city streets. Equipment: Truck mounted Bergkamp M2 paving machines with slurry seal spreader box with hydarulically driven augers. Cleaning of streets conducted by ground personnel and TYMCO street sweeper and traffic control conducted by experienced T.C. crew. Litigation: N/A	Scott Olsen Supervisor Streets Department Price City, UT (435) 636-5640
Payson City Fall Asphalt Maintenance Contract Date: Jun. 15, 2022 Payson, UT Contract Amount: $234,746.96 w/ change orders: $234,746.96 Completion Date: Jul. 12, 2022	104,368 SY of Slurry Seal Type II, CQS-1H on city streets and 18 Tons of crack seal, Elastoflex 650 on city streets. Equipment: Truck mounted Bergkamp M2 paving machines with slurry seal spreader box with hydraulically driven augers. BearCat crack seal kettles w/ truck-mounted air systems. Litigation: N/A	Kent Fowden City Inspector Public Works Payson City, UT (801) 404-6511

Promontory Conservancy Contract Date: Apr. 4, 2022 Park City, UT Contract Amount: $483,325.67 w/ change orders: $483,325.67 Completion Date: Jun. 20, 2022	2,656,365 SF of Slurry Seal Type II, CQS-1H on HOA roads and 20 Tons of Crack Seal, Elastoflex 650 on HOA roads. Equipment: Truck mounted Bergkamp M2 paving machines with slurry seal spreader box with hydraulically driven augers. BearCat crack seal kettles w/ truck-mounted air systems. Litigation: N/A	Darrin Nielsen Operations Director Promontory Conservancy Park City, UT (801) 870-6374
Douglas City Slurry Seal Contract Date: Feb. 28, 2022 Douglas, WY Contract Amount: $154,951.93 w/ change orders: $219,840.85 Completion Date: Jun. 6, 2022	78,765 SY of Slurry Seal Type III, CQS-1HLM 2% on city streets. Equipment: Truck mounted Bergkamp M2 paving machines with slurry seal spreader box with hydraulically driven augers. Cleaning of streets conducted by ground personnel and TYMCO street sweeper and traffic control conducted by experienced T.C. crew. Litigation: N/A	Steve Martinez Director Public Works Douglas City, WY (307) 358-9750
Payson City Spring Asphalt Maintenance Contract Date: May 2, 2022 Payson, UT Contract Amount: $132,933.05 w/ change orders: $128,460.71 Completion Date: May 13, 2022	60,869 SY of Slurry Seal Type II, CQS-1H on city streets and 9.2 Tons of crack seal, Elastoflex 650 on city streets. Equipment: Truck mounted Bergkamp M2 paving machines with slurry seal spreader box with hydraulically driven augers. Cleaning of streets conducted by ground crew and TYMCO street sweeper. Litigation: N/A	Kent Fowden City Inspector Public Works Payson City, UT (801) 404-6511
St. George City Slurry Seal Project Contract Date: Jul. 15, 2021 St. George, UT Contract Amount: $487,200.00 w/ change orders: $487,200.00 Completion Date: Nov. 15, 2021	350,000 SY of Slurry Seal Type II, CQS-1HLM 3% on city streets. Equipment: Truck mounted Bergkamp M2 paving machines with slurry seal spreader box with hydraulically driven augers. Cleaning of streets conducted by ground personnel and TYMCO street sweeper and traffic control conducted by experienced T.C. crew. Litigation: N/A	Jay Sandberg City Engineer Public Works St. George City, UT (435) 627-4122
Tooele City Slurry Seal Project Contract Date: Apr. 18, 2021 Tooele, UT Contract Amount: $157,450.00 w/ change orders: $166,851.21 Completion Date: Oct. 20, 2021	129,847 SY of Slurry Seal Type II, CQS-1HLM 3% on city streets. Equipment: Truck mounted Bergkamp M2 paving machines with slurry seal spreader box with hydraulically driven augers. Cleaning of streets conducted by ground personnel and TYMCO street sweeper and traffic control conducted by experienced T.C. crew. Litigation: N/A	Paul Hansen Principal Engineer City Engineering Tooele City, UT (435) 843-2132
University of Utah Asphalt Maintenance Contract Date: 7/19/2021 Salt Lake City, UT Contract Amount: $374,448.06 w/ change orders: $374,448.06 Completion Date: Oct. 4, 2021	Multi-year project consisting of Asphalt Maintenance of various lots throughout the University of Utah campus. Asphalt maintenance products performed include Slurry Seal Type II, Seal Coat PMM, Crack Seal Elastoflex 650, Asphalt Patching, Mill and Overlay, and Pavement Markings. Litigation: N/A	Paul Quist Manager Commuter Services University of Utah, SLC, UT (801) 581-3401
Springville City Microsurface Contract Date: Jun. 23, 2021 Springville, UT Contract Amount: $216,080.28 w/ chage orders: $216,080.28 Completion Date: Sept. 30, 2021	177,702 SY of Microsurface Seal Type II, CQS-1HLM 3% on city roads. Equipment: Truck mounted Bergkamp M2 paving machines with micro-surface seal hydraulically adjustable spreader box with hydraulically driven dual augers. Cleaning of roads conducted by ground personnel and TYMCO street sweeper. T.C. Crew. Litigation: N/A	Jason Riding City Inspector Public Works Springville City, UT (801) 489-2765
Midway Road Surface Treatments Contract Date: Apr. 13, 2021 Midway, UT Contract Amount: $238,503.62 w/ change orders: $428,472.52 Completion Date: Sept. 30, 2021	422,039 SF of Slurry Seal Type II CQS-1HLM 3% on city streets and 311,823 SF of Slurry Seal Type II CQS-1HLM 3% on sub-developments. 126,770 SF of Seal Coat Polymer Modified Masterseal on city trails. 7.70 Tons of Crack Seal Elastoflex 410 on city streets and 2.89 Tons on sub-developments. Including additional sub-contract work. Litigation: N/A	Joeseph Serre Engineer Horrock's Engineers Heber City, UT (435) 654-2226

Payson City Slurry Seal Contract Date: May 7, 2021 Payson, UT Contract Amount: $377,543.65 w/ change orders: $377,543.65 Completion Date: Sept. 28, 2021	203,194 SY of Slurry Seal Type II CQS-1HLM 3% on city streets. 24 Tons of Crack Seal Elastoflex 650 on city streets. Equipment: Truck mounted Bergkamp M2 paving machines with slurry seal spreader box with hydraulically driven augers. Crack Seal performed with BearCat Crack Seal Kettles. Litigation: N/A	Kent Fowden City Inspector Public Works Payson City, UT (801) 404-6511
Green River Cape Seal Contract Date: Jul. 2, 2021 Green River, WY Contract Amount: $249,378.40 w/ change orders: $278,307.04 Completion Date: Sept. 25, 2021	130,633 SY of Cape Seal Slurry Seal Type II, CQS-1HLM 3% on city streets on previously placed chip seal product. Equipment: Truck mounted Bergkamp M2 paving machines with slurry seal spreader box with hydraulically driven augers. Chip Seal performed by GC - Advanced Paving. Litigation: N/A	Andy Hooten Principal Engineer Public Works Green River City, WY (307) 780-6190
The Colony Asphalt Maintenance Contract Date: Apr. 28, 2021 Park City, UT Contract Amount: $376,814.62 w/ change orders: $349,324.22 Completion Date: Aug. 30, 2021	1,809,030 SF of Microsurface Seal Type III, CQS-1P SLR on roads. Equipment: Truck mounted Bergkamp M2 paving machines with micro-surface seal hydraulically adjustable spreader box with hydraulically driven dual augers. Cleaning of roads conducted by ground personnel and TYMCO street sweeper. Litigation: N/A	Joe Fiducia Maint. Manager The Colony HOA Park City, UT (435) 602-2875
Powell City Slurry Seal Project Contract Date: May 26, 2021 Powell, WY Contract Amount: $339,227.00 w/ change orders: $339,227.00 Completion Date: Aug. 15, 2021	161,000 SY of Slurry Seal Type III, CQS-1HLM 2% on city streets. Equipment: Truck mounted Bergkamp M2 paving machines with slurry seal spreader box with hydraulically driven augers. Cleaning of roads conducted by ground personnel and TYMCO street sweeper and traffic control conducted by experienced T.C. crew. Litigation: N/A	Andy Metzler Supervisor Streets Department Powell City, WY (307) 754-6951
Park City Pavement Management Contract Date: May 24, 2021 Park City, UT Contract Amount: $109,197.48 w/ change orders: $109,697.48 Completion Date: Aug. 1, 2021	79,590 SY of Slurry Seal Type II, CQS-1HLM 3% on city streets. Equipment: Truck mounted Bergkamp M2 paving machines with slurry seal spreader box with hydraulically driven augers. Cleaning of roads conducted by ground personnel and TYMCO street sweeper and traffic control conducted by experienced T.C. crew. Litigation: N/A	Troy Dayley Streets Manager Public Works Park City, UT (435) 615-5637
Herriman City Surface Treatments Contract Date: Mar 10, 2021 Herriman, UT Contract Amount: $329,098.44 w/ change orders: $329,098.44 Completion Date: May 22, 2021	2,337,076 SF of Slurry Seal Type II CQS-1H on city streets. Equipment: Truck mounted Bergkamp M2 paving machines with slurry seal spreader box with hydraulically driven augers. Cleaning of streets conducted by ground personnel and TYMCO street sweeper and traffic control conducted by experienced T.C. crew. Litigation: N/A	Bryce Terry Assistant City Engineer Herriman City, UT (801) 446-5323
Clinton Surface Treatment Contract Date: Mar 29, 2021 Clinton, UT Contract Amount: $125,517.20 w/ change orders: $139,394.10 Completion Date: Jun 7, 2021	105,705 SY of Slurry Seal Type II CQS-1H on city streets. Equipment: Truck mounted Bergkamp M2 paving machines with slurry seal spreader box with hydraulically driven augers. Cleaning 6 Tons of Crack Seal Elastoflex 650 using Bearcat Kettles. 3.5 Tons of Gap B Mastic Seal using Mastic Kettle. Litigation: N/A	Gregg Folk Streets Supervisor Public Works Clinton City, UT (801) 941-1133
Bluffdale Slurry Seal Contract Date: Feb 15, 2021 Bluffdale, UT Contract Amount: $193,225.00 w/ change orders: $193,225.00 Completion Date: May 3, 2021	1,452,836 SF of Slurry Seal Type II CQS-1HLM 3% on city streets. Equipment: Truck mounted Bergkamp M2 paving machines with slurry seal spreader box with hydraulically driven augers. Cleaning of streets conducted by ground personnel and TYMCO street sweeper and traffic control conducted by experienced T.C. crew. Litigation: N/A	Tom Hyatt City Engineer Engineering Bluffdale City, UT (801) 386-1227

Midway Road Surface Treatments Contract Date: Mar 3, 2020 Midway, UT Contract Amount: $276,936.55 Subdevelopments: $139,291.50 Completion Date: Oct 31, 2020	650,639 SF of Slurry Seal Type II CQS-1HLM 3% on city streets. 57,209 SF of Slurry Seal Type I CQS-1HLM 3% on city streets. 18,550 SF of Slurry Seal Type III CQS-1HLM 3% on city round-a-bout. 192,992 SF of Seal Coat Polymer Modified Masterseal on city trails. 8.16 Tons of Crack Seal Maxwell Products Elastoflex 410 Litigation: N/A	Wes Johnson Principal Engineer Horrocks Engineers Heber City, UT (801) 368-6509
Hurricane Slurry Seal Project Contract Date: Feb 7, 2020 Hurricane, UT Contract Amount: $321,600.00 w/ change orders: $326,559.55 Completion Date: Apr 29, 2020	240,000 SY of Slurry Seal Type II CQS-1HLM 3% on city streets. Equipment: Truck mounted Bergkamp M2 paving machines with slurry seal spreader box with hydraulically driven augers. Cleaning of streets conducted by ground personnel and TYMCO street sweeper and traffic control conducted by experienced T.C. crew. Litigation: N/A	Arthur LeBaron City Engineer Public Works Hurricane City, UT (435) 632-3462
Payson Pavement Management Contract Date: Jun 25, 2019 Payson, UT Contract Amount: $247,453.00 w/ change orders: $247,453.00 Completion Date: Sept 24, 2019	62,652 SY of Slurry Seal Type II CQS-1H on city streets. Equipment: Truck mounted Bergkamp M2 paving machines with slurry seal spreader box with hydraulically driven augers. 50 Tons of Crack Seal Elastoflex 650 on city streets using Bearcat crack seal kettles. Litigation: N/A	Kent Fowden City Inspector Public Works Payson City, UT (801) 404-6511
Clinton Surface Treatment Contract Date: Mar 8, 2019 Clinton, UT Contract Amount: $139,357.00 w/ change orders: $139,357.00 Completion Date: Sept. 23, 2019	9,475 SY of Slurry Seal Type III CQS-1H on city streets. 79,594 SY of Slurry Seal Type II CQS-1H on city streets. 13,965 SY of Cape Seal/Slurry Seal Type II CQS-1H on city streets. Equipment: Truck mounted Bergkamp M2 paving machines with slurry seal spreader box with hydraulically driven augers. Litigation: N/A	Gregg Folk Streets Supervisor Public Works Clinton City, UT (801) 941-1133
Payson Pavement Management Contract Date: Feb 7, 2020 Payson, UT Contract Amount: $261,713.36 w/ change orders: $346,360.03 Completion Date: Sept. 14, 2020	182,614 SY of Slurry Seal Type II CQS-1HLM 3% on city streets. Equipment: Truck mounted Bergkamp M2 paving machines with slurry seal spreader box with hydraulically driven augers. 20 Tons of Crack Seal Elastoflex 650 on city streets using Bearcat crack seal kettles. Litigation: N/A	Kent Fowden City Inspector Public Works Payson City, UT (801) 404-6511
Herriman City Cape Seal Contract Date: Jul. 2, 2019 Herriman, UT Contract Amount: $173,745.00 w/ change orders: $173,745.00 Completion Date: Aug. 23, 2019	1,296,603 SF of Slurry Seal Type II CQS-1HLM 3% on city streets. Equipment: Truck mounted Bergkamp M2 paving machines with slurry seal spreader box with hydraulically driven augers. Cleaning of streets conducted by ground personnel and TYMCO street sweeper and traffic control conducted by experienced TC crew. Litigation: N/A	Justin Edwards Director Public Works Herriman City, UT (801) 727-0953
Saratoga Springs Road Maintenance Contract Date: May 22, 2019 Saratoga Springs, UT Contract Amount: $148,420.00 w/ change orders: $148,420.00 Completion Date: Aug 14, 2019	84,803 SY of Slurry Seal Type II CQS-1HLM 3% on city streets. 8,708 SY of Slurry Seal Type I CQS-1HLM 3% on city park parking lots. Equipment: Truck mounted Bergkamp M2 paving machines with slurry seal spreader box with hydraulically driven augers. Cleaning of streets conducted by ground personnel and TYMCO sweeper. Litigation: N/A	Jeremy Lapin Director Public Works Saratoga Springs City, UT (801) 694-8829

STATE OF UTAH
DEPARTMENT OF COMMERCE
ACTIVE LICENSE

Asphalt Preservation, LLC
3507 S 2700 W
WEST HAVEN UT 84401

EFFECTIVE
11/30/2019

EXPIRATION
11/30/2025

REFERENCE NUMBER(S), CLASSIFICATION(S) & DETAIL(S)

10455610-5501 Contractor With LRF

B100, E100, S260, S330

DBAs: None Associated

IMPORTANT LICENSURE REMINDERS:

- Your license is valid until the expiration date listed on this form.
- Please note the address listed below. This is your public address of record for the division, and all future correspondence from the division will be mailed to this address. If you move, it is your responsibility to notify us directly of the change. Maintaining your current address with us is the easiest way to ensure continuous licensure.
- This license has been issued to the business entity. Any change in the license's original entity structure requires a new license (i.e. DBA to a Corporation, etc.). Please contact the division before you make such changes.

ASPHALT PRESERVATION, LLC
3507 S 2700 W
WEST HAVEN UT 84401

Please visit our web site at www.dopl.utah.gov should you have any questions in the future.

STATE OF UTAH
DEPARTMENT OF COMMERCE
DIVISION OF PROFESSIONAL LICENSING
ACTIVE LICENSE

EFFECTIVE DATE: **11/30/2019**

EXPIRATION DATE: **11/30/2025**

ISSUED TO: **Asphalt Preservation, LLC**
3507 S 2700 W
WEST HAVEN UT 84401

REFERENCE NUMBER(S), CLASSIFICATION(S) & DETAIL(S)

10455610-5501 **Contractor With LRF** **DBAs:** None Associated

B100, E100, S260, S330

Form #1

ASPHALT PRESERVATION, LLC

Update this Business

Entity Number: 9061012-0160
Company Type: LLC - Domestic
Address: 3507 S 2700 W WEST HAVEN, UT 84401
State of Origin:
Registered Agent: TIFFANY GAMA
Registered Agent Address:
3507 S 2700 W
West Haven, UT 84401

View Management Team

Status: Active

Purchase Certificate of Existence

Status: Active *as of 02/21/2024*
Renew By: 06/30/2025
Status Description: License Issuance
Employment Verification: Not Registered with Verify Utah

History

View Filed Documents

Registration Date: 06/02/2014
Last Renewed: N/A

Additional Information

NAICS Code: 2389 **NAICS Title:** 2389-Other Specialty Trade Contractors

Doing Business As

ASPHALT ENTERPRISES, LLC

Former Business Names

ASPHALT PRESERVATION
ASPHALT PRESERVATION LLP

<< Back to Search Results

Business Name:

Registered Principals

Name	Type	City	Status
ASPHALT PRESERVATION, LLC	Limited Liability Company	WEST HAVEN	Active

Position	Name	Address	
Manager	FERNANDO GAMA	5932 S 4300 W	HOOPER UT 84315
Manager	TIFFANY GAMA	3507 S 2700 W	West Haven UT 84401
Registered Agent	TIFFANY GAMA	3507 S 2700 W	West Haven UT 84401

If you believe there may be more principals, click here to View Filed Documents

Business Name:

CITY OF SANTA CLARA
2603 SANTA CLARA DRIVE
SANTA CLARA, UTAH 84765
(435) 673-6712 office
(435) 628-7338 fax

2024 SPRING PAVEMENT MAINTENANCE CONTRACT
BID SCHEDULE: Slurry Seal

The following Bid Schedule is used for determining unit prices for slurry seal. The slurry seal shall be applied in accordance with the International Slurry Surfacing Association (ISSA) Recommended Performance Guideline for Emulsified Asphalt Slurry Seal A105 (dated February 2010) as attached.

Item	Description	Quantity	Unit	Unit Price	Total
1	Slurry Seal Type II with 3% latex, apply at 15 to 18 lbs per sy	1,839,008	sf	0.189	347,572.51
				Total Bid Price:	$ 347,572.51

Abbreviations: sf-square feet, lbs-pounds

Name of Contractor: Morgan Pavement Maintenance

Signature: _____ **Date:** 3/25/2024

Print Name: Josh Callister **Phone:** 801-544-5947

By submitting and signing this, contractor certifies that it does not and will not, during the performance of this contract, knowingly employ or subcontract with any entity which employs workers in violation of 8 U.S.C. §1324a. Contractor agrees to produce, at the City's request, such documents which are required to verify compliance with applicable federal and state laws. If the contractor knowingly employs workers in violation of 8 U.S.C. §1324a, such violation shall be cause for unilateral cancellation of the contract between contractor and the City. In the event this contract is terminated due to violation of 8 U.S.C. §1324a by the contractor or by a subcontractor of the contractor, the contractor shall be liable for any and all costs associated with such termination including, but not limited to, any damages incurred by the City, as well as attorney's fees.

DOCUMENT 00 43 13
BIDDER'S BOND

KNOW ALL MEN BY THESE PRESENTS, THAT WE Morgan Pavement Maintenance as PRINCIPAL, and United State Fire Insurance Company as SURETY, are held and firmly bound unto CITY OF SANTA CLARA, UTAH, hereinafter referred to as the "City," and the "Obligee" in the penal sum of **5 percent** of the total amount of the bid as the Principal above-named, submitted by said Principal to said City, for the work described below, for the payment of which sum in lawful money of the United States of America, well and truly to be made, we bind ourselves, our heirs, executors, administrators and successors, jointly and severally, firmly by these presents.

THE CONDITIONS OF THIS OBLIGATION ARE SUCH, that whereas, said Principal has submitted the above-mentioned bid to said City for construction of **2024 Spring Pavement Maintenance Contract**, for which bids are to be opened at the Ivins City, 85 North Main Street, Ivins, Utah 84738.

NOW, THEREFORE, if said Principal is awarded the contract and, within the time and manner required under the heading "Instruction to Bidders," after the prescribed forms are presented to him for signature, enters into a written contract, in the form of agreement bound herein, in accordance with the bid, and files the required Bond with said City to guarantee faithful performance, then his obligation shall be null and void, otherwise it shall be and remain in full force and effect. In the event suit is brought upon this Bond by the Obligee and judgment is recovered, said surety shall pay all costs incurred by the Obligee in such suit, including a reasonable attorney's fee to be fixed by the Court.

IN WITNESS WHEREOF, we have hereunto set our hands and seals this 26 day of March, 2024.

Morgan Pavement Maintenance	United State Fire Insurance Company
Principal	Surety
By _____ (SEAL)	By Kellen Jensen

POWER OF ATTORNEY
UNITED STATES FIRE INSURANCE COMPANY
PRINCIPAL OFFICE - MORRISTOWN, NEW JERSEY

12650

KNOW ALL MEN BY THESE PRESENTS: That United States Fire Insurance Company, a corporation duly organized and existing under the laws of the state of Delaware, has made, constituted and appointed, and does hereby make, constitute and appoint:

Todd Chapman, Keller Jensen

each, its true and lawful Attorney(s)-In-Fact, with full power and authority hereby conferred in its name, place and stead, to execute, acknowledge and deliver: Any and all bonds and undertakings of surety and other documents that the ordinary course of surety business may require, and to bind United States Fire Insurance Company thereby as fully and to the same extent as if such bonds or undertakings had been duly executed and acknowledged by the regularly elected officers of United States Fire Insurance Company at its principal office, in amounts or penalties: **Fifty Million Dollars ($50,000,000)**

This Power of Attorney limits the act of those named therein to the bonds and undertakings specifically named therein, and they have no authority to bind United States Fire Insurance Company except in the manner and to the extent therein stated.

This Power of Attorney is granted pursuant to Article IV of the By-Laws of United States Fire Insurance Company as now in full force and effect, and consistent with Article III thereof, which Articles provide, in pertinent part:

> Article IV, Execution of Instruments - Except as the Board of Directors may authorize by resolution, the Chairman of the Board, President, any Vice-President, any Assistant Vice President, the Secretary, or any Assistant Secretary shall have power on behalf of the Corporation:
>
> (a) to execute, affix the corporate seal manually or by facsimile to, acknowledge, verify and deliver any contracts, obligations, instruments and documents whatsoever in connection with its business including, without limiting the foregoing, any bonds, guarantees, undertakings, recognizances, powers of attorney or revocations of any powers of attorney, stipulations, policies of insurance, deeds, leases, mortgages, releases, satisfactions and agency agreements;
> (b) to appoint, in writing, one or more persons for any or all of the purposes mentioned in the preceding paragraph (a), including affixing the seal of the Corporation.
>
> Article III, Officers, Section 3.11, Facsimile Signatures. The signature of any officer authorized by the Corporation to sign any bonds, guarantees, undertakings, recognizances, stipulations, powers of attorney or revocations of any powers of attorney and policies of insurance issued by the Corporation may be printed, facsimile, lithographed or otherwise produced. In addition, if and as authorized by the Board of Directors, dividend warrants or checks, or other numerous instruments similar to one another in form, may be signed by the facsimile signature or signatures, lithographed or otherwise produced, of such officer or officers of the Corporation as from time to time may be authorized to sign such instruments on behalf of the Corporation. The Corporation may continue to use for the purposes herein stated the facsimile signature of any person or persons who shall have been such officer or officers of the Corporation, notwithstanding the fact that he may have ceased to be such at the time when such instruments shall be issued.

IN WITNESS WHEREOF, United States Fire Insurance Company has caused these presents to be signed and attested by its appropriate officer and its corporate seal hereunto affixed this 28th day of September, 2021.

UNITED STATES FIRE INSURANCE COMPANY

Matthew E. Lubin, President

State of New Jersey}
County of Morris }

On this 28th day of September, 2021, before me, a Notary public of the State of New Jersey, came the above named officer of United States Fire Insurance Company, to me personally known to be the individual and officer described herein, and acknowledged that he executed the foregoing instrument and affixed the seal of United States Fire Insurance Company thereto by the authority of his office.

MELISSA H. D'ALESSIO
NOTARY PUBLIC OF NEW JERSEY
Commission # 50125833
My Commission Expires 4/7/2026

Melissa H. D'Alessio (Notary Public)

I, the undersigned officer of United States Fire Insurance Company, a Delaware corporation, do hereby certify that the original Power of Attorney of which the foregoing is a full, true and correct copy is still in force and effect and has not been revoked.

IN WITNESS WHEREOF, I have hereunto set my hand and affixed the corporate seal of United States Fire Insurance Company on the 26 day of March 2024

UNITED STATES FIRE INSURANCE COMPANY

Michael C. Fay, Senior Vice President

2024 PAVEMENT MAINTENANCE CONTRACT
INFORMATION REQUIRED OF BIDDER

The Bidder is required to supply the following information. Additional sheets may be attached if necessary.

(1) Bidder Morgan Pavement Maintenance

(2) Address 625 S Main, Clearfield, UT 84015

(3) Telephone 801-544-5947

(4) Utah Contractor's License No. 9798330-5501

(5) Contractor's License Class: E100,B100 Monetary Limit: _____

(6) Type of Bidder: ___ Individual ___ Partnership ___ Firm

___ Company _x_ Corporation ___ Association

(7) Corporation organized under the laws of the state of UTAH

(8) List the names, titles, and addresses of all principals and/or officers of the individual, partnership, firm, LLC, company, corporation or associations.

Jeremy Nielson - President
Lowell 'Tres' Smith - Vice President
Chad Dyer - Vice President
Dean Garrett - Treasurer

(9) Number of years experience as a contractor in construction work of this type: 40

(10) List at least three similar projects completed as of a recent date:

Project Name:	ST George Slurry 2023	Contract Price:	473,475.00
Owner Name:	City Of St George	Phone Number:	435-627-4000
Slurry Quantity (sy):	305,555 SY		

Project Name:	Draper City Roads Maint.	Contract Price:	1,308,233.42
Owner Name:	Draper City	Phone Number:	385-529-1075
Slurry Quantity (sy):	355,637 SY		

2024 PAVEMENT MAINTENANCE CONTRACT
INFORMATION REQUIRED OF BIDDER

Project Name:	Herriman Slurry Project 2023	Contract Price:	604,900.15
Owner Name:	Herriman City	Phone Number:	801-446-5523
Slurry Quantity (sy):	400,086 SY		

(11) List Equipment available to Contractor:

Number of Slurry Surface Machines owned by Contractor: See Attached Equipment list

Number of Slurry Surface Machines to be used on this project: 4 Bergkamp Slurry Trucks

Description of Slurry Surface Machines to be used on this project (Make, Model, Size, Year and other pertinent data):

See Attached Equipment List

Description of sweeper to be used on this project: Elgin Crosswind, may sub sweep work to Straight Stripe out of St George

List any other equipment that will be used for this project:

See Attached Equipment List

(12) Material source and laboratory evaluating mix design

Asphalt Emulsion Source: NuRock Asphalt Coatings

Asphalt Emulsion Type: LMCQS-1H

Aggregate Source: Interstate Rock Products -Hurricane, UT

Laboratory evaluating mix design: Ingevity Design

(13) Crew Foreman

Name of crew foreman designated for this project: Angel Vega

Name of 2nd crew foreman (if needed) designated for this project: David Hernandez

2024 PAVEMENT MAINTENANCE CONTRACT
INFORMATION REQUIRED OF BIDDER

List at least three prior projects that crew foreman has completed working as a foreman:

Project Name:	St George Slurry 2023	Contract Price:	473,475.00
Owner Name:	City of St George	Phone Number:	801-446-5523
Slurry Quantity (sy):	305,555 SY		

Project Name:	Draper City Roads Maint.	Contract Price:	1,308,233.42
Owner Name:	Draper City	Phone Number:	385-529-1075
Slurry Quantity (sy):	355,637 SY		

Project Name:	Washington City Slurry 2023	Contract Price:	734,361.50
Owner Name:	Washington City	Phone Number:	435-773-8854
Slurry Quantity (sy):	464,541 SY		

List at least three prior projects that 2nd crew foreman (if needed) has completed working as a foreman:

Project Name:	Herriman Slurry Project 2023	Contract Price:	604,900-15
Owner Name:	Herriman City	Phone Number:	801-446-5523
Slurry Quantity (sy):	400,086 SY		

Project Name:	White Pine County Slurry 2023	Contract Price:	317,324.51
Owner Name:	White Pine County	Phone Number:	775-293-6541
Slurry Quantity (sy):	128,700 SY		

Project Name:	Murray City Slurry 2023	Contract Price:	164,506.28
Owner Name:	Murray City	Phone Number:	801-712-0788
Slurry Quantity (sy):	96,768 SY		

Equipment Specifications

Filters: Business unit - UT-Slurry Seal

Equipment Specs

ID	Description	Equipment Category	Serial Number	Equipment Type	Ownership Type	Manufacturer	Model	Year
Equipment Type: Day Cab Tractor								
Category: Truck - Heavy								
05118	01 KENWORTH	Truck - Heavy	1NKWX60X71R877764	Day Cab Tractor	Owned	KENWORTH	W900B	2000
01053	98 KENWORTH TRANSPORT	Truck - Heavy	1XKWDB9X9WR765212	Day Cab Tractor	Owned	KENWORTH	W900	1998
Equipment Type: Enclosed Trailer								
Category: Trailer - Light								
08217	08 CHARMAC TRLR	Trailer - Light	4RYG122028T110836	Enclosed Trailer	Owned	CHARMAC	ENCLOSED TRAILER	2008
14350	14 WELLS CARGO TRLR	Trailer - Light	575200G2XEU255903	Enclosed Trailer	Owned	WELLS CARGO	CW1424-102-V	2014
Equipment Type: Large Equipment Haul Trailer								
Category: Trailer - Heavy								
FC249	98 TWAMCO TRANPORT TRLR	Trailer - Heavy	0054098	Large Equipment Haul Trailer	Owned	TWAMCO	77X14LTA	1997
Equipment Type: Live Bottom								
Category: Trailer - Heavy								
06160	05 TRAIL KING BOTTOM TRLR	Trailer - Heavy	1TKLC41265W037997	Live Bottom	Owned	TRAIL KING	OLB236	2005
Equipment Type: Micro Box								
Category: Attachment								
09240	09 ALLISON FAB MICRO BOX	Attachment	UTT32059	Micro Box	Owned	HOMEMADE	MICRO BOX TRAILER	2009
10254	10 BERGKAMP SPREADER BOX	Attachment		Micro Box	Owned	BERGKAMP		2010
20612	8001 BERGKAMP SLURRY BOX	Attachment		Micro Box	Owned	BERKAMP		
20613	AXEL NOBEL MICROBOX #1 (FROM SLC)	Attachment		Micro Box	Owned	AXEL NOBEL		
20614	AXLE NOBEL MICRO BOX#2	Attachment		Micro Box	Owned			
02016	BERGKAMP MICROBOX (FROM SLC)	Attachment		Micro Box	Owned	BERGKAMP		
08221	BERGKAMP MOBILE MIXPAVER	Attachment		Micro Box	Owned	BERGKAMP		0
Equipment Type: Multi Axle Flatbed w/brake								
Category: Trailer - Light								
08223	07 PJ TRAILERS CONE TRLR	Trailer - Light	4P5UH182471102594	Multi Axle Flatbed w/brake	Owned	PJ	CONE TRAILER	2007
12310	12 WESTERN REC TRLR	Trailer - Light	4EXFC1826CU005754	Multi Axle Flatbed w/brake	Owned	WESTERN RECREATION	FC8018	2012

Equipment Specifications

Filters: Business unit - UT-Slurry Seal

Equipment Specs

ID	Description	Equipment Category	Serial Number	Equipment Type	Ownership Type	Manufacturer	Model	Year
98001	98 UTILITY TRLR	Trailer - Light	13ZTL142XW1001336	Multi Axle Flatbed w/brake	Owned	PARKER	83X14 LAND	1998
Equipment Type: Pick Up Flatbed								
Category: Truck - Light								
06163	07 GMC CABOVER FLATBED	Truck - Light	J8DC4B16677003579	Pick Up Flatbed	Owned	GMC	W4500	2007
20577	2019 CHEVY 3500 (227409)	Truck - Light	1GB3KVCY2KF227409	Pick Up Flatbed	Owned	CHEVROLET	3500 FLATBED	2019
21664	2021 CHEVY 3500(135785) TRAFFIC	Truck - Light	1GB3YSEY1MF135785	Pick Up Flatbed	Rented	CHEVROLET	3500 FLATBED	2021
Equipment Type: Pick Up Service Body								
Category: Truck - Light								
08224	08 CHEVY CREW(197028)	Truck - Light	1GBJC33638F197028	Pick Up Service Body	Owned	CHEVROLET	SILVERADO 3500 HD	2008
11272	11 CHEVY PICKUP(203218)	Truck - Light	1GB4KZCL7BF203218	Pick Up Service Body	Owned	CHEVROLET	SILVERADO 3500 4X4	2011
18512	2018 CHEVY 3500 UTILITY(128133)	Truck - Light	1GB4KYCY1JF128133	Pick Up Service Body	Owned	CHEVROLET	3500HD WT 4X4	2018
19542	2019 CHEVY 3500 (237438)(DAVID)	Truck - Light	1GB4KVCY9KF237438	Pick Up Service Body	Owned	CHEVROLET	SILVERADO 3500 4X4	2019
Equipment Type: Pick Up Truck								
Category: Truck - Light								
08213	08 CHEVY PICKUP (176961)ANDREW	Truck - Light	1GBJC34638E176961	Pick Up Truck	Owned	CHEVROLET	SILVERADO 3500 HD	2008
12299	12 CHEVY TRUCK(201405)	Truck - Light	1GC1KVC81CF201405	Pick Up Truck	Owned	CHEVROLET	SILVERADO 2500HD 4X4	2013
13315 SOLD	13 CHEVY 1500 (158763)	Truck - Light	3GCPKSE71DG158763	Pick Up Truck	Owned	CHEVROLET	SILVERADO 1500	2013
14353	15 CHEVY PICKUP(166656)	Truck - Light	1GC1KUE89FF166656	Pick Up Truck	Owned	CHEVROLET	SILVERADO 2500HD 4X4	2015
15375	15 CHEVY TRUCK(559723)	Truck - Light	1GC1KVE85FF559723	Pick Up Truck	Owned	CHEVROLET	SILVERADO 2500HD 4X4	2015
15376	2015 CHEVY 2500 (559647)	Truck - Light	1GC1KVE84FF559647	Pick Up Truck	Owned	CHEVROLET	SILVERADO 2500HD 4X4	2015
21712	2021 CHEV 3500 HD (133970) IVAN	Truck - Light	1GC4YTEY9NF133970	Pick Up Truck	Owned	CHEVROLET	3500 SILVERADO 4WD CREW CAB	2022
21643	2021 CHEVY 3500 (207039) KURTIS	Truck - Light	1GC4YTEY1MF207039	Pick Up Truck	Rented	CHEVROLET	SILVERADO 3500	2021
21703	2021 CHEVY 3500 (291118) MARIO	Truck - Light	1GC4YTEYXMF291118	Pick Up Truck	Owned	CHEVROLET	SILVERADO 3500 HD	2021
Equipment Type: Pneumatic Roller								
Category: Equipment - Large								

Equipment Specifications

Filters: Business unit - UT-Slurry Seal

Equipment Specs

ID	Description	Equipment Category	Serial Number	Equipment Type	Ownership Type	Manufacturer	Model	Year
10252	09 LEEBOY PNUEM ROLLER(54683)	Equipment - Large	54683	Pneumatic Roller	Owned	LEEBOY	420	2008
Equipment Type: Slurry Box								
Category: Attachment								
01059	01 SLURRY BOX	Attachment		Slurry Box	Owned			
06168	06 BERGKAMP SLURRY BOX	Attachment		Slurry Box	Owned	BERGKAMP		2006
21709	2021 RAYNER SLURRY SPREADER BOX	Attachment		Slurry Box	Owned	RAYNER EQUIPMENT	110002971	2021
23774	2023 SLURRY BOX #1	Attachment	IN HOUSE BUILD	Slurry Box	Owned			
23775	2023 SLURRY BOX #2	Attachment	IN HOUSE BUILD	Slurry Box	Owned			
07204	BERGKAMP SLURRY BOX	Attachment		Slurry Box	Owned	BERGKAMP		
21634	BERGKAMP SPREADER BOX	Attachment	N/A	Slurry Box	Owned	BERGKAMP	VSB914	2021
18508	CPM SPREADER BOX	Attachment		Slurry Box	Owned			
FC278	ROADSAVER SLURRY BOX	Attachment		Slurry Box	Owned	ROADSAVER		
Equipment Type: Slurry Box Trailer								
Category: Trailer - Light								
06166	06 SLURRY BOX TRLR	Trailer - Light	UTT29349	Slurry Box Trailer	Owned	HOMEMADE	BOX TRAILER	2006
09239	09 ALLISON FAB BOX TRLR	Trailer - Light	UTT38115	Slurry Box Trailer	Owned	HOMEMADE	BOX TRAILER	2009
21701	2021 MICRO BOX TRAILER	Trailer - Light	UTT48949	Slurry Box Trailer	Owned	MORGAN INDUSTRIES	MICRO TRAILER	2021
21666	2021 MICRO BOX TRAILER (IN HOUSE FABRICATED)	Trailer - Light	TBD	Slurry Box Trailer	Owned	IN HOUSE FABRICATED		2020
21700	2021 MICRO BOX TRAILER (JOBOX)	Trailer - Light	UTT48953-52453	Slurry Box Trailer	Owned	Morgan Pavement		2020
FC243	98 BOX TRAILER	Trailer - Light	UTT22479	Slurry Box Trailer	Owned	HOMEMADE	BOX TRAILER	1998
11271	MICRO BOX TRLR	Trailer - Light		Slurry Box Trailer	Owned	BESAW	MICRO TRAILER	2011
Equipment Type: Slurry Truck								
Category: Truck - Heavy								
06161	06 PETERBILT SLURRY TK	Truck - Heavy	1NPALBTX67N654474	Slurry Truck	Owned	PETERBILT	357	2006
09236	07 STERLING SLURRY TRUCK	Truck - Heavy	2FZHAZCV07AZ18389	Slurry Truck	Owned	STERLING	LT9500	2007
08215	08 PETERBILT SLURRY(766136)	Truck - Heavy	1NPTLUTX48D766136	Slurry Truck	Owned	PETERBILT	367	2008
12292	13 PETERBILT SLURRY TRUCK	Truck - Heavy	1NPTX4TX8DD182353	Slurry Truck	Owned	PETERBILT	367	2013
18506	2007 INTERNATIONAL SLURRY TRUCK	Truck - Heavy	1HTWYAHT07J484928	Slurry Truck	Owned	INTERNATIONAL	SF647	2006

Equipment Specifications

Filters: Business unit - UT-Slurry Seal

Equipment Specs

ID	Description	Equipment Category	Serial Number	Equipment Type	Ownership Type	Manufacturer	Model	Year
18507	2007 INTERNATIONAL SLURRY TRUCK	Truck - Heavy	1HTWYAHT27J484929	Slurry Truck	Owned	INTERNATIONAL	SF647	2006
19552	2007 PETERBILT/BERGKAMP SLURRY TRK	Truck - Heavy	1NPALB0X07N744885	Slurry Truck	Owned	PETERBILT	357	2007
22764	2022 KENWORTH (236353)	Truck - Heavy	1NKZXPEXXPJ236353	Slurry Truck	Owned	KENWORTH	T880	2022
22765	2022 KENWORTH (236355)	Truck - Heavy	1NKZXPEX3PJ236355	Slurry Truck	Owned	KENWORTH	T880	2022
07200	97 FORD SLURRY TRUCK(OOS)	Truck - Heavy	1FDZY90U7VVA13518	Slurry Truck	Owned	FORD	LTS9000	1997
Equipment Type: Sweeper								
Category: Truck - Heavy								
16413	2006 FRGHTLNR W/ELGIN SWEEPER	Truck - Heavy	49HAADBV16DW44656	Sweeper	Owned	STERLING	SC-8000	2006
18523	2006 INTERNATIONAL ELGIN SWEEPER	Truck - Heavy	1HTMMAAN16H329017	Sweeper	Owned	INTERNATIONAL	4300 SBA 4X2	2006
18524	2014 AUTOCAR/ELGIN SWEEPER	Truck - Heavy	516M1DB2XEH216381	Sweeper	Owned	AUTOCAR	ACMD XPERT	2016
21718	2019 BROCE BROOM	Truck - Heavy	201943	Sweeper	Owned	CATE	BW260	2019
08228	ELGIN CROSSWIND SWEEP	Truck - Heavy	1HTMMAAN18H579716	Sweeper	Owned	INTERNATIONAL	4300 SBA 4X2	2008
Equipment Type: Water Trailer								
Category: Trailer - Light								
00042	00 WATER DOG 500 GALLON	Trailer - Light		Water Trailer	Owned			2000
Equipment Type: Wheel Loader								
Category: Equipment - Large								
08210	05 KOMATSU LOADER	Equipment - Large	KMTWA055E57A74475	Wheel Loader	Owned	KOMATSU	WA250-5L	2005
98002	98 CAT LOADER(R00704)	Equipment - Large	6XR00704	Wheel Loader	Owned	CAT	928G	1998
19543	CAT LOADER 926M(LTE04076)	Equipment - Large	LTE04076	Wheel Loader	Owned	CAT	926M	2017

Mayor
Rick Rosenberg

City Manager
Brock Jacobsen

CITY OF SANTA CLARA
FOUNDED 1854

City Council
Jarett Waite
Ben Shakespeare
Christa Hinton
Janene Burton
Dave Pond

CITY COUNCIL

Meeting Date: 10/Apr/24 **Agenda Item:** 4

Applicant: N/A **Requested by:** Dustin Mouritsen

Subject: Pump for the Crestview Santa Clara Elementary Irrigation Line

Description:

Consider approval of the pump required to provide enough pressure for the secondary irrigation water for the Crestview Santa Clara Elementary to Coombs Hopkins for the amount of $187,390. The Washington County School District has obligated $150,000 towards the purchase of the pump as this will not require them to need a pump at the school. This pump will also provide enough pressure for future use if we decide to expand the secondary system.

Recommendation: Approval

Attachments: N/A

Cost: 187390

Legal Approval: Yes

Finance Approval: Yes

Budget Approval: Yes

COOMBS HOPKINS
& DC FROST | AFTERMARKET

PROPOSAL

(Proposal # 24GF.730-3)

26 MARCH 2024

SANTA CLARA BOOSTER PUMP

SANTA CLARA, UT

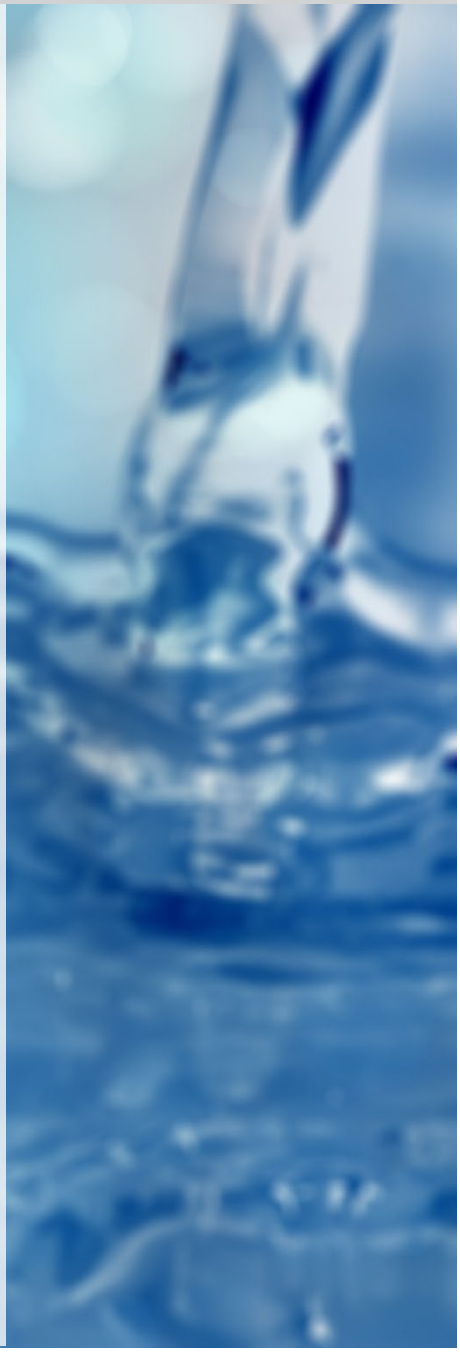

PREPARED FOR

Santa Clara City
Dustin Mouritsen
dmouritsen@sccity.org
435-656-4690; ext. 214

AREA REPRESENTATIVE

Coombs Hopkins Company (CHC)
James Goldhardt
james@chcwater.com
801-674-2177

DATE: **March 26, 2024**

TO: **Santa Clara City**
Dustin Mouritsen

DC Frost Associates, Inc. (DCF), a subsidiary of the Coombs Hopkins Company is pleased to submit a proposal for the following equipment (the "Products") on the project indicated above (the "Project"). This proposal constitutes DCF's contractual offer of goods and services in connection with the Project. Please feel free to contact James Goldhardt for any questions or comments you may have in connection with this proposal.

BID PRICING

ITEM	SPECIFICATION SECTION	EQUIPMENT	TOTAL PRICE*
I	**N/A**	**LE Duplex Booster Pump Station** *(Gorman Rupp Webtrol NV180 Pumps)*	**$187,390**

*Taxes are not included

OPTIONAL ADDERS

EQUIPMENT	PRICE
N/A	N/A

DELIVERY

DCF will submit drawings for approval within **8-10** weeks after Purchaser's receipt of DCF's written acknowledgement of an approved purchase order. DCF intends to ship all Products **24** weeks after receipt of approved drawings from Purchaser. However, the dates of drawing submission and shipment of the Products represents DCF's best estimate, but is not guaranteed, and DCF shall not be liable for any damages due to late delivery. The Products shall be delivered to the delivery point or points in accordance with the delivery terms stated in this proposal. If such delivery is prevented or postponed by reason of Force Majeure, as defined in DCF's standard terms and conditions of sale, DCF shall be entitled at its option to tender delivery to Purchaser at the point or points of manufacture, and in default of Purchaser's acceptance of delivery, to cause the Products to be stored at such a point or points of manufacture at Purchaser's expense. Such tender, if accepted, or such storage, shall constitute delivery for all purposes of this proposal. If shipment is postponed at request of Purchaser, or due to delay in receipt of shipping instructions, payment of the purchase price shall be due on notice from DCF that the Products are ready for shipment. Handling, moving, storage, insurance and other charges thereafter incurred by DCF with respect to the Products shall be for the account of Purchaser and shall be paid by Purchaser when invoiced.

ITEM I – Gorman Rupp LEH Booster Package System

Base Mounted Pump Stations are pre-engineered units with an extensive selection of pumps, motors, controls, piping and accessories. Gorman-Rupp has many standard designs for new installations, or we can custom design for existing installations with minimum hook-up time. Base Mounted Pump Stations are available with a variety of pumps to match system requirements, including: vertical in-line, horizontal end-suction or horizontal split-case. Flows from low to heavy require that any number of pumps may be used in conjunction with multiple size pumps. Pumps are available with a large range of flows and heads.

The LE package is a complete packaged pump station including pump control panel and additional items as described in the quotation below. The unit base shall be comprised of a base plate, perimeter flange, and reinforcements. Base plate will be fabricated of steel not less than 1/4" thick, and will incorporate openings for access to all internal cavities to permit complete grouting of the unit base after installation. Perimeter flange and reinforcements will be designed to prevent flexing or warping under operating conditions. Base plate and/or flanges will be drilled for hardware used to secure unit base to concrete pad. Unit base will contain provisions for lifting the complete pump unit during shipping and handling.

DESIGN PARAMETERS*

Description	Duty Point
Flow Rate	250 GPM Each Pump / 500 GPM Combined Flow
Design Pressure	90 PSI
Positive Inlet Pressure	35 PSI

**Note: the design parameters are based on verbal discussions with Rosenberg Associates. It is recommended that the information included be verified for proper sizing. Any changes to the pump model due to flow requirements and/or pressure may amount in a price change and/or pump size change.*

SCOPE OF SUPPLY:

Items Included

STATION INFORMATION

GENERAL DATA

Application Type	Pressure Booster
Pressure Booster Type	Positive Inlet Pressure
Station Type	LE
Voltage	3/60/480

PUMPS AND OPTIONS

PUMP(S)

NOTE: Refer to email correspondence with Ryan and Chad regarding this pump selection.

Pump Model	Quantity (2), 3" Webtrol NV180B3-2FE (27 FLA)
Horsepower	20 HP

BASE OPTIONS

BASE TYPE

Base Type and Orientation	Flex-Coupled Pump(s) To Be Mounted On Common Base

MOTOR DATA

MOTOR OPTIONS

Motor Enclosure Type	256T - 20 HP Motor(s) Shall Be Supplied With TEFC Enclosures

STATION PIPING

SUCTION PIPING

Common Suction Header	4" Inch Common Suction Header

DISCHARGE PIPING

Common Discharge Header	4" Common Discharge Header
Check Valve	4" Globe (Fresh) Check Valve
Discharge Isolation Valve Type	Butterfly Valve, with Lever Actuator

PIPING OPTIONS

Gauge Panel Kit(s)	Quantity (2), Range 0-200 PSI

CONTROL PANEL

ENCLOSURE

Control Panel Rating	NEMA 3R (Outdoor - Indirect Sunlight) 304 Stainless Steel Enclosure
Panel Size/Shipment Method	60" H x 60" W x 18" D Panel To Be Shipped Loose (Floor Stands)
Main Incoming Connection	Main Lug For Incoming Connection, Rated for 10kA SCCR

TRANSFORMER(S)

Internal Transformer	A 3kVA internal power transformer will be supplied for 120V single phase loads inside the control panel

PRIMARY MOTOR STARTER

Primary Motor Starter Type	AB PowerFlex 525 VFD

PRIMARY CONTROL SYSTEM

Primary Controller	Allen Bradley CompactLogix L306
Operator Interface Series	6.5", AB - PanelView Plus 7
Primary Sensor	VEGABAR 28 Universal Pressure Sensor

CONTROL PANEL OPTIONS

UL / C.S.A Listing	U.L. Listed (Control Panel Only)
Control Panel Heater	A Panel Heater Will Be Supplied To Reduce Humidity Within The Control Panel.
Control Panel Surge Protective Device	A Type 2 SPD Will Be Furnished To Provide Protection From Overvoltage Surges.
ALARMS	
Dry Well Flood Alarm	A Float Shall Be Wired Adjacent To The Station Sump To Monitor The Station Enclosure And Include Dry Contacts.
OTHER	
Freight	Included FOB, paid to single destination
Field Service	1 Trip / 1 Day for Start-up and Training
Manuals	3 Hard Copies, 1 Electronic Copy

Item Not Included (but not limited to):

No offloading, storage or installation is included
Field labor of any kind
Taxes, bonds or bank guarantees
Only the controls specifically listed are included (
No equipment or services (unless specifically listed under the items included above are being provided. Please contact Coombs Hopkins / DC Frost for additional information or clarifications.

PRICING TERMS

The prices quoted are based upon Purchaser's acceptance of this proposal, through the submission of a purchase order or other written acceptance, being placed no later than 30 days after date listed on this proposal. After expiration of the pricing effectivity period, prices will be subject to review and adjustment. Prices quoted are FCA surface point of shipment, with freight included to an accessible point nearest the jobsite. Federal, state or local sales, use or other taxes are not included in the sales price.

PAYMENT TERMS

Payment terms are thirty percent (30%) of the Contract amount paid upon receipt of approved submittal and seventy percent (70%) of the Contract amount paid when goods are ready for shipment. Net 30.

Purchaser shall remit payment for proper invoices received from DCF in accordance with the payment terms stated above even if the Purchaser has not been paid by the Purchaser's customer (the "Owner"), if Purchaser is not the end-user of the Products. Overdue and unpaid invoices are subject to a service charge of 6% per month until paid.

If Purchaser requests or causes cancellation, suspension or delay of DCF's work, Purchaser shall accept transfer of title and pay DCF all appropriate charges incurred up to date of such event plus DCF's overhead and reasonable profit. Additionally, all charges related to and risks incidental to storage, disposition and/or resumption of work shall be borne solely by Purchaser. Full payment for all work shall be due and payable thirty (30) days from the date work is placed into storage.

TAXES

Federal, State or local sales, use or other taxes are **not included** in the sales price. Such taxes, if applicable, shall be for Purchaser's account.

BACKCHARGES

In no event shall Purchaser/Owner do or cause to be done any work, purchase any services or material or incur any expense for the account of DCF, nor shall DCF be responsible for such work or expenses, until after Purchaser/Owner has provided DCF full details (including estimate of material cost and amount and rate of labor required) of the work, services, material or expenses, and DCF has approved the same in writing. DCF will not accept Products returned by Purchaser/Owner unless DCF has previously accepted the return in writing and provided Purchaser/Owner with shipping instructions.

WARRANTY AND CONDITIONS

DCF standard Terms and Conditions are attached and made an essential part of this proposal. These terms and conditions are an integral part of DCF's offer of Products and related services and replace and supersede any terms and conditions or warranty included in Purchaser or Owner requests for quotation or specifications and cannot be changed without written approval from an authorized representative of DCF.

CONFIDENTIALITY

The contents of this proposal are confidential and shall be used by Purchaser and/or Owner only for the purpose of evaluating DCF's offer of goods and services in connection with the Project. Purchaser/Owner shall not disclose the contents of this proposal to any third party without the prior written consent of DCF.

Attachments:

UL Calculations
NV180B3 Pump Curve
Reference Skid Drawing (NOT FOR CONSTRUCTION / REFERENCE ONLY)
DC Frost Associates General Terms and Conditions

Motor Control Calculation

Volts: **460**
Ph: **3**
Hz: **60**
Project: **Santa Clara**

Load	hp/kva/ kw	FLA (508A, Tbl 50.1)	75 C Internal Wire (Cu) see note 2 (508A, 29.6 &Tbl 28.1)	Field Wire Amps (50.1 x 1.25)	75 C Field Wire (Cu) see note 2 (508A, 28.3 &Tbl 28.1)	Field Wire Bend Space (I per term) (508A, Tbl 25.1)	Max Mtr CB (508A, Tbl 31.1 (250%))	Max Mtr Fuse (508A, Tbl 31.1 (175%))	Mtr Gnd (CB) see note 1 (508A, Tbl 15.1)	Mtr Gnd (Fuse) see note 1 (508A, Tbl 15.1)	G-R Std Mtr CB ((200% approx)	Mtr Gnd (G-R CB) see note 1 (508A, Tbl 15.1)	Main G-R CB Calc Thermal/Mag	Main Wire Calc 75c (508A, 28.3.3)	Main CB Calc Thermal/Mag (508A, 32.3)	Main Fuse Calc Inverse Time (508A, 32.3)
Largest Motor	20	27.00	10	33.8	8	1.5"	70	50	8	10	60	10	60	33.75	70	50
Motor 2	20	27.00	10	33.8	8	1.5"	70	50	8	10	60	10	27.00	27.00	27.00	27.00
Motor 3		0.00	N/A	0.0	N/A	0	N/A	N/A	N/A	N/A	N/A	N/A	0.00	0.00	0.00	0.00
Motor 4		0.00	N/A	0.0	N/A	0	N/A	N/A	N/A	N/A	N/A	N/A	0.00	0.00	0.00	0.00
Motor 5		0.00	N/A	0.0	N/A	0	N/A	N/A	N/A	N/A	N/A	N/A	0.00	0.00	0.00	0.00
Motor 6		0.00	N/A	0.0	N/A	0	N/A	N/A	N/A	N/A	N/A	N/A	0.00	0.00	0.00	0.00
Motor 7		0.00	N/A	0.0	N/A	0	N/A	N/A	N/A	N/A	N/A	N/A	0.00	0.00	0.00	0.00
Motor 8		0.00	N/A	0.0	N/A	0	N/A	N/A	N/A	N/A	N/A	N/A	0.00	0.00	0.00	0.00
Xfmr 1ph	3	6.52	Based on Pri C/B				See Xfmr Std						8.15	8.15	8.15	8.15
Xfmr 3ph		0.00	Based on Pri C/B				See Xfmr Std						0.00	0.00	0.00	0.00
Heater 1ph		0.00	N/A	0.0	N/A	0	N/A	N/A	N/A	N/A			0.00	0.00	0.00	0.00
Heater 3ph		0.00	N/A	0.0	N/A	0.0	N/A	N/A	N/A	N/A			0.00	0.00	0.00	0.00
										Total			95.15	68.90	105.15	85.15

Notes:

1 The equipment ground conductor is not required to be larger than the current carrying field wire. Per UL 508A, 15.1 Exception

2 Use internal wire size for IEC control only. Use field wire sizes internally for Nema control.

G-R Main C/B	Main Wire Size	Max Main C/B	Max Main Fuse
90	4	100	80

Main Gnd	Main Bend Space	Main Gnd	Main Gnd
8	2"	8	8

Rev:

Customer :
Reference :

Pump Performance Datasheet

Webtrol Selector System 23.4.1

Item number	: Default	Size	: NV180B3-2FE
Service	:	Stages	: 3
Quantity	: 1	Based on curve number	: NV180B3-2
Quote number	:	Basic model number	: NV180B3-2-CL
		Date last saved	: 14 Mar 2024 7:58 PM

Operating Conditions	
Flow, rated	: 250.0 USgpm
Head, rated (requested)	: 90.00 psi
Head, rated (actual)	: 95.08 psi
Suction pressure, rated / max	: 0.00 / 0.00 psi.g
NPSH available	: Ample
Site Supply Frequency	: 60 Hz
Performance	
Speed criteria	: Synchronous
Speed	: 3450 rpm
Impeller dia.	: 5.35 in
Impeller diameter, maximum	: 5.35 in
Impeller diameter, minimum	: 5.35 in
Efficiency	: 76.51 %
PEI (CL)	: 0.90
NPSH required / margin required	: 12.69 / 0.00 ft
Ns (imp. eye flow) / Nss (imp. eye flow)	: 2,018 / 8,683 US Units
MCSF	: 30.00 USgpm
Head max.	: 139.7 psi
Head rise to shutoff	: 46.89 %
Flow, best eff. point	: 236.6 USgpm
Flow ratio, rated / BEP	: 105.68 %
Diameter ratio (rated / max)	: 100.00 %
Head ratio (rated dia / max dia)	: 100.00 %
Cq/Ch/Ce/Cn [ANSI/HI 9.6.7-2010]	: 1.00 / 1.00 / 1.00 / 1.00
Selection status	: Acceptable

Liquid	
Liquid type	: Chemical
Additional liquid description	:
Solids diameter, max	: 0.00 in
Solids concentration, by volume	: 0.00 %
Temperature	: 68.00 deg F
Fluid density	: 1.000 / 1.000 SG
Viscosity	: 1.00 cP
Vapor pressure, rated	: 0.00 psi.a
Material	
Material selected	: 304SS/EPDM
Pressure Data	
Maximum working pressure	: 139.7 psi.g
Maximum allowable working pressure	: 232.0 psi.g
Maximum allowable suction pressure	: 145.0 psi.g
Hydrostatic test pressure	: N/A
Driver & Power Data (@Max density)	
Driver sizing specification	: Rated power
Margin over specification	: 0.00 %
Service factor	: 1.00
Power, hydraulic	: 13.87 hp
Power, rated	: 18.12 hp
Power, maximum	: 18.27 hp
Motor rating	: 20.00 hp / 14.91 kW

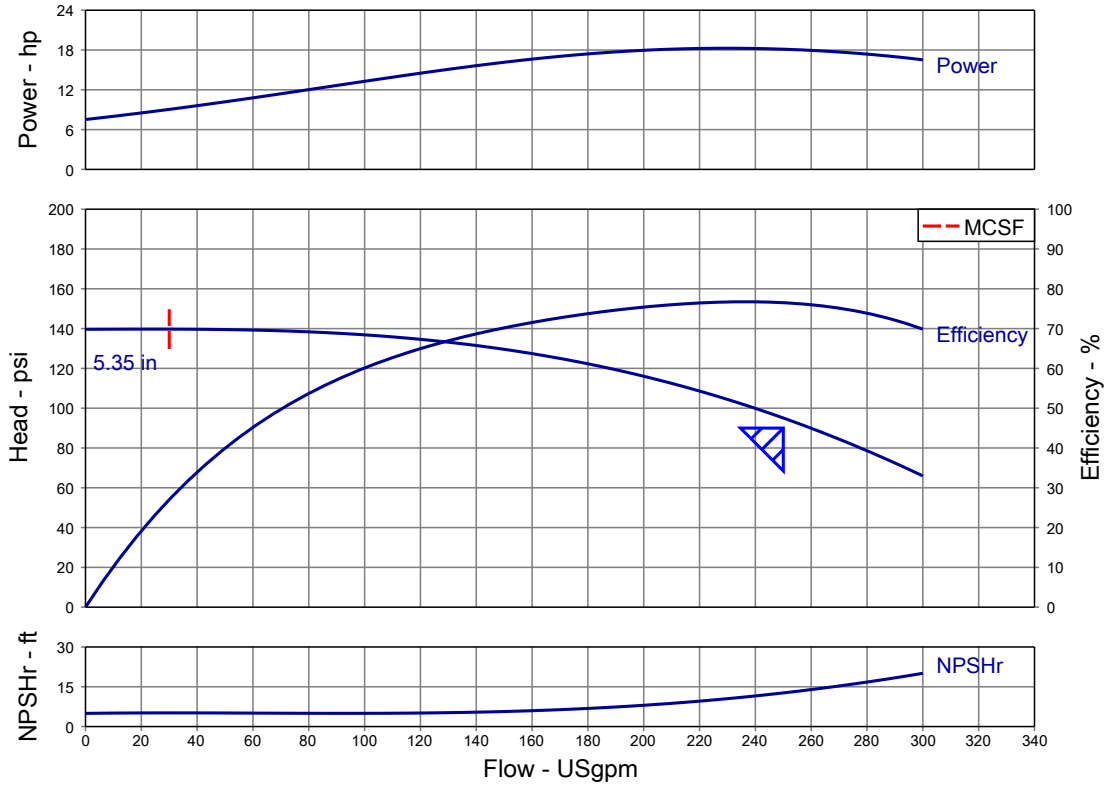

Customer :
Reference :

Pump Performance Curve

Webtrol Selector System 23.4.1

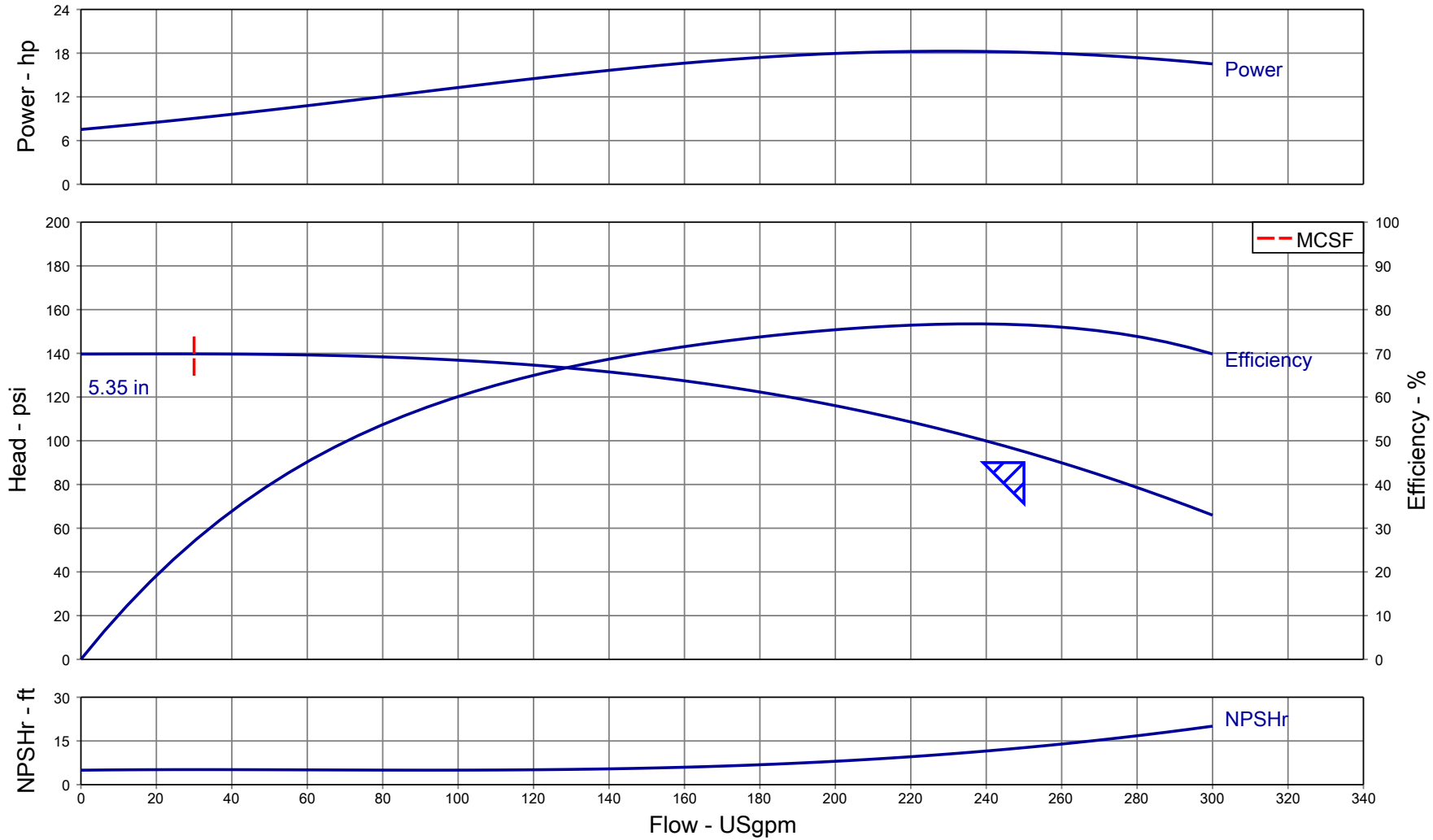

Item number	: Default	Size	: NV180B3-2FE	Flow, rated	: 250.0 USgpm
Service	:	Stages	: 3	Head, rated	: 90.00 psi
Quantity	: 1	Speed	: 3450 rpm	NPSH required	: 12.69 ft
Quote number	:	Based on curve number	: NV180B3-2	Fluid density	: 1.000 / 1.000 SG
Date last saved	: 14 Mar 2024 7:58 PM	Basic model number	: NV180B3-2-CL	Viscosity	: 1.00 cP
		Efficiency	: 76.51 %	Cq/Ch/Ce/Cn [ANSI/HI 9.6.7-2010]	: 1.00 / 1.00 / 1.00 / 1.00
		PEI (CL)	: 0.90		
		Power, rated	: 18.12 hp		

Customer :
Reference :

Multi-Speed Performance Curve

Webtrol Selector System 23.4.1

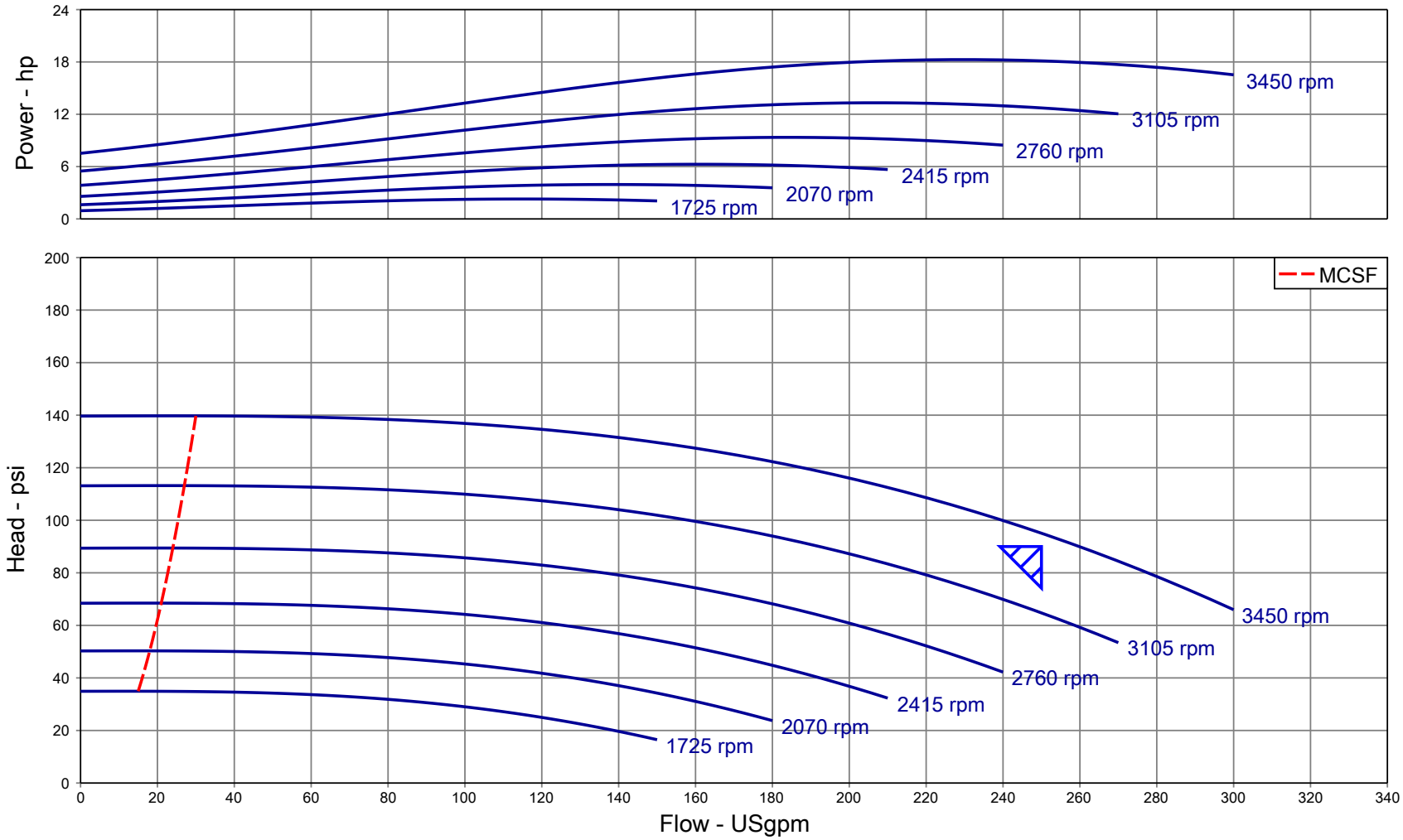

Item number	: Default	Size	: NV180B3-2FE	Flow, rated	: 250.0 USgpm
Service	:	Stages	: 3	Head, rated	: 90.00 psi
Quantity	: 1	Efficiency	: 76.51 %	Speed	: 3450 rpm
Quote number	:	PEI (VL)	: -	Impeller dia.	: 5.35 in
Based on curve number	: NV180B3-2	Power, rated	: 18.12 hp	Fluid density	: 1.000 / 1.000 SG
		NPSH required	: 12.69 ft	Viscosity	: 1.00 cP
Basic model number	: NV180B3-2-CL	Site Supply Frequency	: 60 Hz	Cq/Ch/Ce/Cn [ANSI/HI 9.6.7-2010]	: 1.00 / 1.00 / 1.00 / 1.00
Date last saved	: 14 Mar 2024 7:58 PM	Nominal speed	: 3525 rpm		

Customer :
Reference :

Life Cycle Cost Datasheet

Webtrol Selector System 23.4.1

Item number	: Default	Quantity	: 1	Size	: NV180B3-2FE
Service	:	Quote number	:	Stages	: 3
		Date last saved	: 14 Mar 2024 7:58 PM	Speed	: 3450 rpm

Load Profiles and Energy Costs

Expected pump life: 20 years	Load Profile #1	Load Profile #2	Load Profile #3	Load Profile #4	Load Profile #5	Total
Flow: (USgpm)	500.0	-	-	-	-	-
Operation: (hours per year)	8,760	-	-	-	-	8,760
Energy cost, present value ($ per kWh)	0.1	-	-	-	-	-
Speed (rpm)	3450	-	-	-	-	-
Head (psi)	-129.28	-	-	-	-	-
Efficiency (%)	-263.25	-	-	-	-	-
Power, rated (hp)	14.32	-	-	-	-	-
Motor efficiency (%)	100.00	-	-	-	-	-
Drive/gear efficiency (%)	100.00	-	-	-	-	-
System curve		-	-	-	-	-
Energy, total (kWh)	1,871,321.1	-	-	-	-	1,871,321.1
Energy cost, per year	$ 9,356.61	-	-	-	-	$ 9,356.61
Energy cost, total present value	$ 140,333.91	-	-	-	-	$ 140,333.91

Life Cycle Cost Calculation

Additional Annual Costs			**Additional One-time Costs, Year 0**			**Interest and Inflation Rates**		
Routine maintenance cost	:	0.00	Initial investment cost	:	0.00	Interest rate, %	:	6.00
Repair cost	:	0.00	Installation and commissioning cost	:	0.00	Inflation rate, %	:	3.00
Operating cost	:	0.00	Other one-time costs, year 0	:	0.00	**Total Net Present Value Costs**		
Downtime cost	:	0.00	**Additional One-time Costs, Year 20**			Total energy cost	:	$ 140,333.91
Environmental cost	:	0.00	Decommissioning cost	:	0.00	Total additional annual cost	:	$ 0.00
Other annual costs	:	0.00	Other one-time costs, year 20	:	0.00	Total additional one-time cost	:	$ 0.00
Total, present value	:	$ 0.00	Total, present value	:	$ 0.00	Total life cycle cost	:	$ 140,333.91

Customer :
Reference :

Pump Performance - Additional Data

Webtrol Selector System 23.4.1

Item number	: Default	Size	: NV180B3-2FE
Service	:	Stages	: 3
Quantity	: 1	Speed	: 3450 rpm
Quote number	:	Intellicode	:
		Date last saved	: 14 Mar 2024 7:58 PM

Performance Data	
Head, maximum diameter, rated flow	: 95.08 psi
Head, minimum diameter, rated flow	: 95.08 psi
Head max.	: 139.7 psi
Efficiency adjustment factor, total	: 1.00
Power adjustment, total	: 0.00 hp
Head adjustment factor, total	: 1.00
Flow adjustment factor, total	: 1.00
Flow adjustment factor, efficiency only (shift BEP)	: 1.00
Flow adjustment factor, end-of-curve only, total	: 1.00
MCSF adjustment factor	: 1.00
NPSHR adjustment factor, total	: 1.00
NPSHR slope correction factor	: 1.00
User applied performance adjustment comments	:
NPSH margin dictated by pump supplier	: 0.00 ft
NPSH margin dictated by user	: 0.00 ft
NPSH margin used (added to 'required' values)	: 0.00 ft

Mechanical Limits	
Torque, rated power, rated speed	: 0.53 hp/100 rpm
Torque, maximum power, rated speed	: 0.53 hp/100 rpm
Torque, driver power, full load speed	: 0.57 hp/100 rpm
Torque, driver power, rated speed	: 0.57 hp/100 rpm
Torque, pump shaft limit	: 1.73 hp/100 rpm
Radial load, worst case	: -
Radial load limit	: -
Impeller peripheral speed, rated	: -
Impeller peripheral speed limit	: -

Stage, Speed and Solids Limits	
Stages, maximum	: 3
Stages, minimum	: 3
Pump speed limit, maximum	: 3600 rpm
Pump speed limit, minimum	: 1800 rpm
Curve speed limit, maximum	: 3600 rpm
Curve speed limit, minimum	: 1800 rpm
Variable speed limit, maximum	: -
Variable speed limit, minimum	: 1200 rpm
Solids size limit	: 0.00 in

Energy Indexes	
Bare pump model number	: NV180B3-2
Basic model number	: NV180B3-2-CL
PEI CL/VL	: 0.90 / -
ER CL/VL	: - / -

Typical Driver Data	
Driver speed, full load	: 3525 rpm
Driver speed, rated load	: 3532 rpm
Driver efficiency, 100% load	: 90.20 %
Driver efficiency, 75% load	: 89.90 %
Driver efficiency, 50% load	: 88.30 %

Various Performance Data	**Flow (USgpm)**	**Head (psi)**	**Efficiency (%)**	**NPSHr (ft)**	**Power (hp)**
Shutoff, rated	0.00	139.7	-	-	7.52
Shutoff, maximum	0.00	139.7	-	-	7.52
MCSF	30.00	139.7	27.02	5.16	9.05
Rated flow, minimum	250.0	95.08	76.51	-	18.12
Rated flow, maximum	250.0	95.08	76.51	-	18.12
BEP flow, rated	236.6	101.5	76.74	11.18	18.25
120% rated flow, rated	300.0	65.96	69.86	20.07	16.52
End of curve, rated	300.0	65.96	69.86	20.07	16.52
End of curve, minimum	300.0	65.96	69.86	20.07	16.52
End of curve, maximum	300.0	65.96	69.86	20.07	16.52
Maximum value, rated	-	139.7	76.74	-	18.27
Maximum value, maximum	-	-	76.74	-	18.27

System differential pressure	**@ Density, rated**	**@ Density, max**
Differential pressure, rated flow, rated (psi)	95.08	95.08
Differential pressure, shutoff, rated (psi)	139.7	139.7
Differential pressure, shutoff, maximum (psi)	139.7	139.7

Discharge pressure	**@ Suction pressure, rated**	**@ Suction pressure, max**	**@ Suction pressure, rated**	**@ Suction pressure, max**
Discharge pressure, rated flow, rated (psi.g)	95.08	95.08	95.08	95.08
Discharge pressure, shutoff, rated (psi.g)	139.7	139.7	139.7	139.7
Discharge pressure, shutoff, maximum (psi.g)	139.7	139.7	139.7	139.7

Ratios

Maximum flow / rated flow, rated	: 120.00 %	Head rated diameter / head minimum diameter, rated flow	: 100.00 %

Construction

Seals	: EDPM	Connection	: Flange

REVISIONS				
SYM.	DATE	RECORD	DR.	CK.

ITEM	DESCRIPTION	MATERIAL & SIZE
1	PUMP	CAST IRON NV85
2	STATION BASE	STEEL
3	BUTTERFLY VALVE	CAST IRON 3"
4	CHECK VALVE	CAST IRON 3"
5	SUCTION HEADER	E.L. STEEL 3"
6	DISCHARGE HEADER	E.L. STEEL 3"
7	BLIND FLANGE	CAST IRON
8	PIPE SUPPORT	STEEL

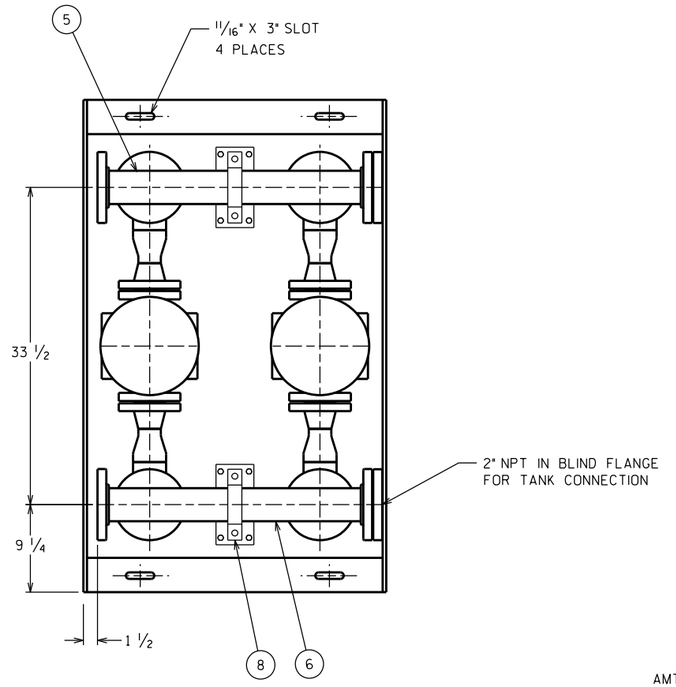

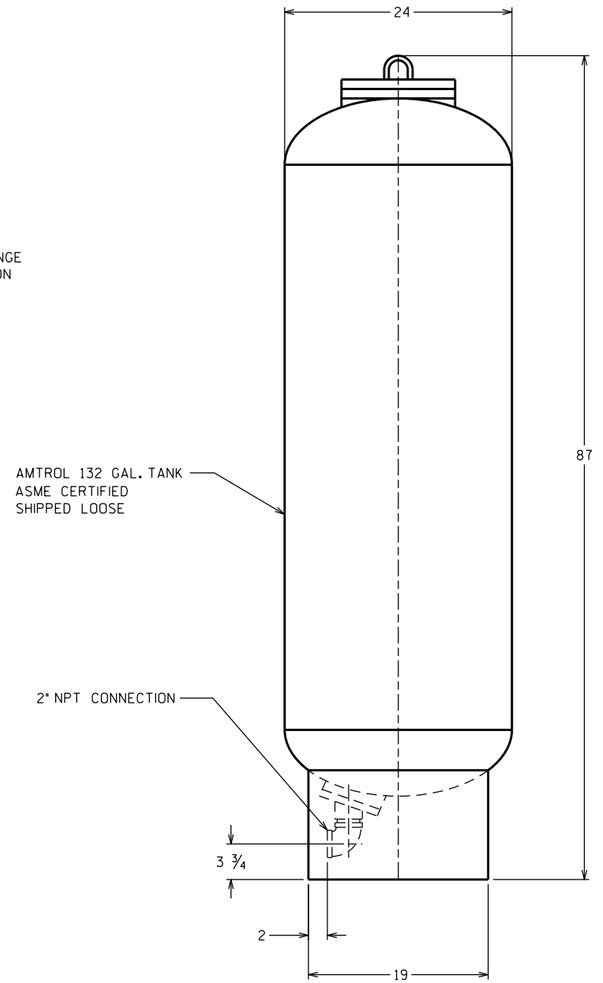

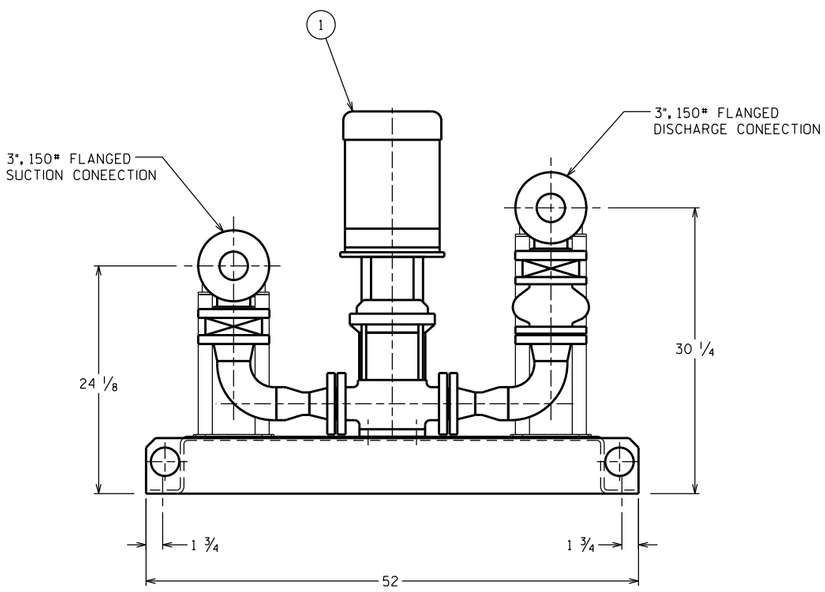

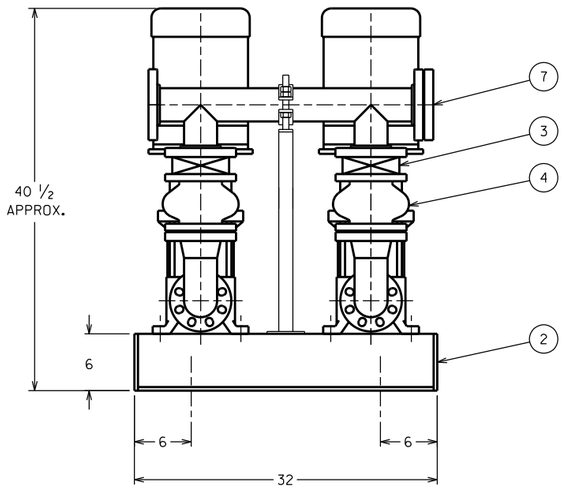

REFERENCE DRAWING ONLY!
ACTUAL SKID SIZE WILL DIFFER

PB1057.S01.DGN

THE GORMAN-RUPP CO.
MANSFIELD, OHIO ST. THOMAS, ONTARIO

NAME			
BASE MOUNTED DUPLEX PRESSURE BOOSTER STATION			
DRN. BW	CHK.	APP.	DATE 5-29-21
D	PB-1057		SERIAL NO.

COOMBS HOPKINS
& DC FROST | AFTERMARKET

DC Frost Associates, Inc. Standard Terms & Conditions for Gorman-Rupp Equipment/Parts:

1. **DEFINITION: "**Seller" when used herein means **DC Frost Associates, Inc**. "Buyer" when used herein means the person, company or corporation to whom the Seller's quotation is addressed. "Parts" means those components, articles, or supplies described in Seller's quotation.

2. **ACCEPTANCE:** All quotations are for acceptance within the limits established therein and beyond which are subject to change without notice. If this quotation constitutes an acceptance of an offer, such acceptance is expressly made conditional on Buyer's assent solely to the terms of this quotation.
   Any terms proposed in Buyers acceptance of this quotation which add to, vary from, or conflict with the terms hereof are hereby objected to and rejected and shall not constitute any part of any contract resulting from this quotation. Any such proposed terms shall have no force or effect and the terms herein shall constitute the complete and exclusive statement of the terms and conditions of any contract resulting from this quotation and may be modified only by written instrument executed by the authorized representative of both parties.

3. **PRICES:** Prices for Gorman-Rupp equipment/parts included in Seller's quotations are subject to the specific outline herein. All freight charges for Equipment/Parts is extra and will be added to all invoices. All quotations provided by Seller are valid for 30-days. After 30-days all Equipment/Parts must be requoted.

4. **TAXES:** Seller quotations will include all applicable taxes. If tax-exempt, Buyer shall supply to the Seller a valid exemption certificate. If not exempt, Buyer shall supply all other tax information required by Seller.

5. **PAYMENT:** Payment terms are as follows: 30% of the Contract amount paid upon receipt of approved submittals, 70% of the Contract amount paid when goods are ready for shipment (net 30).

6. **INDEMNIFICATION & CERTIFICATE OF INSURANCE:** Seller will not indemnify Buyer on any Equipment/Parts orders. Seller will not provide a Certificate of Insurance on any Equipment/Parts orders. No DC Frost Associates, Inc. employee will be on site.

7. **SCHEDULE:** Delivery dates shall be interpreted as estimated and in no event shall dates be construed as falling within the meaning "time is of the essence." Seller shall not be liable for delays due to force majeure, strikes, labor difficulties, fires, acts of government or military forces, transportation, procurement or any other cause beyond the reasonable control of the Seller. No provision for liquidated damages for any cause shall apply to placing an Equipment/Part order with Seller.

8. **TITLE/RISK OF LOSS:** Title and risk of loss shall pass to the Buyer upon tender of delivery F.O.B. manufacturing facility unless otherwise agreed upon by the parties.

9. **ASSIGNMENT:** Neither party shall assign or transfer this quotation without prior written consent of the other party. As a condition of any such written consent, such assignment shall be subject to the terms and conditions herein and no greater rights or remedies shall be available to the assignee.

10. **WARRANTY:** All Equipment/Parts warranties are through Gorman-Rupp. Seller does not warranty parts. Seller shall not be liable for any claims, losses, labor expenses or damages, direct or consequential, resulting directly or indirectly from the use of, or inability to use, parts purchased, or the other consequential loss of damage of any nature arising from any cause.

11. **CHANGES/CANCELLATION:** If the Buyer requests changes to the order, it must be done in writing, **before** the order has been sent to production or shipped. Once a Equipment/Parts order has been accepted and sent to production or the order has shipped, the order cannot be cancelled without penalty imposed by Gorman-Rupp which will be passed down to Buyer.

12. **RESTOCKING FEES/ SHORTAGES/DAMAGES:** No Equipment/Part(s) may be returned for credit without Gorman-Rupp's written authorization. Buyer must notify Seller, in writing, the reason for returning Equipment/Part(s). Seller, in turn, will notify Gorman-Rupp in order to receive a Return Authorization Form for the Buyer to return Equipment/Parts. All returned Equipment/Parts must be securely packaged in its original packing materials and adequately insured and protected to reach Gorman-Rupp location without damage. All shipping and freight charges shall be prepaid by the Buyer. The returned Equipment/Parts may be subject to a restocking charge to be determined by Gorman-Rupp. **SHORTAGES/DAMAGES:** All claims by the Buyer for shortages of Equipment/Parts must be made in writing to the Seller within five (5) business days after receipt by the Buyer. Any Equipment/Parts orders arriving at the site damaged must be reported to Seller, in writing and including pictures of the damage, within five (5) business days after receipt by the Buyer.

The below is authorized to agree to and sign the above Terms & Conditions with the included scope on behalf of Buyer:

Authorized Signature: DUSTIN MOURITSEN Date: 3/26/26

Name/Title: Dustin Mouritsen/Public Works Director Company: Santa Clara City

8706 South 700 East, Suite 201 | Sandy, UT 84070
Phone: 800-964-9733 | Fax: 303-477-1981

Mayor
Rick Rosenberg

City Manager
Brock Jacobsen

CITY OF SANTA CLARA
FOUNDED 1854

City Council
Jarett Waite
Ben Shakespeare
Christa Hinton
Janene Burton
Dave Pond

CITY COUNCIL

Meeting Date: 10/Apr/24 **Agenda Item:** 5

Applicant: Gary Hall **Requested by:** Gary Hall

Subject: Resolution Authorizing a Tax

Certificate

Description:

The Internal Revenue Code and US Treasury Regulations ("Tax Code and Regulations") contain special provisions that allow tax-exempt bonds to be issued to finance prepayments for natural gas and electricity. The prepay transactions are structured to convert the difference between the issuer's lower (tax-exempt) cost of funds and the prepaid energy supplier's higher (taxable) cost of funds into a discounted price for prepaid energy.
The initial discount is expected to be at least 8.0% and will be determined before closing.
The amount of the discount will be reset periodically over the term of the prepay (every five to ten years) when the bonds are refinanced.
UAMPS will assign existing gas or electricity purchase agreements into the prepay transaction and the discount will be applied to the contract prices under these agreements.
The Tax Code and Regulations require that the prepaid (discounted) gas or electricity (including electricity that is generated using prepaid natural gas as fuel) be used by UAMPS members to serve retail customers in their municipal utility service areas. This is referred to as the "Qualifying Use" requirement. The date of closing has not yet been determined but will likely take place in Q2 2024.
The term of the transaction is thirty years.

Recommendation:
Approval

Cost: 0

RESOLUTION NO. 2024-05R AUTHORIZING A TAX CERTIFICATE AND AGREEMENT FOR UAMPS' FIRM POWER SUPPLY PROJECT; AND RELATED MATTERS.

*** *** ***

WHEREAS, the City Santa Clara, Utah (the *"Participant"*) is a member of Utah Associated Municipal Power Systems (*"UAMPS"*) and has previously entered into the Master Firm Power Supply Agreement with UAMPS that enables the parties to enter into firm transactions for the purchase and sale of electricity from specified power supply resources;

WHEREAS, pursuant to the Master Firm Power Supply Agreement (a) UAMPS has entered into the Second Amended and Restated Solar Power Purchase Agreement (the *"Steel Solar 1A PPA"*) with Steel Solar, LLC and (b) the Participant has elected to participate in the Steel Solar 1A PPA pursuant to the Steel 1(A) Solar Project Firm Power Supply Agreement Second Amended and Restated Transaction Schedule (such Transaction Schedule and the Master Firm Power Supply Agreement are referred to collectively herein as the *"Firm PSA"*) between the Participant and UAMPS;*

WHEREAS, the Participant understands that in order to provide a discounted price for a portion of the electricity sold to the Participant under the Firm PSA (such portion is referred to herein as the *"Prepaid Portion"*), UAMPS will participate in a prepayment transaction being undertaken by Southeast Energy Authority, a Cooperative District (*"SEA"*) by (a) assigning its rights to a portion of the electricity to be delivered under the Steel Solar 1A PPA to the commodity supplier under the prepayment transaction and (b) entering into a Commodity Supply Contract (the *"Supply Contract"*) with SEA under which it will purchase the assigned electricity from SEA at a price that reflects a discount from the contract price under the Steel Solar 1A PPA, and the savings from such discount will be applied by UAMPS for the benefit of the Participant and the other Participants in the Steel Solar 1A PPA;

WHEREAS, the Participant has been advised that SEA will issue bonds to finance a prepayment for the electricity that it sells to UAMPS under the Supply Contract (the *"Prepay Bonds"*) with the intention that the interest on the Prepay Bonds will qualify for tax exemption under Section 103 of the Internal Revenue Code of 1986, as amended (the *"Code"*); and

WHEREAS, the Participant acknowledges that its use of the Prepaid Portion of the electricity it purchases under the Firm PSA will be subject to certain restrictions that are necessary to establish and maintain the tax-exempt status of interest on the Prepay Bonds, and desires to adopt this resolution to authorize a Tax Certificate and Agreement that sets forth the Participant's agreement to comply with such restrictions;

* Capitalized terms used and not otherwise defined herein have the meanings assigned to them in the Firm PSA and the Tax Certificate and Agreement.

NOW, THEREFORE, BE IT RESOLVED BY THE GOVERNING BODY OF THE CITY OF SANTA CLARA, UTAH, AS FOLLOWS:

Section 1. Approval of Tax Certificate and Agreement. The Tax Certificate and Agreement, in substantially the form attached hereto as *Exhibit A*, is hereby authorized and approved.

Section 2. Authorized Officers; Final Changes and Dating. The Participant's Representative and Alternate Representative to UAMPS (the *"Authorized Officers"*) are each hereby authorized to execute and deliver the Tax Certificate and Agreement and to deliver the same to UAMPS on behalf of the Participant. Each of the Authorized Officers is hereby delegated authority to approve such changes to the Tax Certificate and Agreement as are necessary to complete the form thereof, together with any minor or non-substantive changes, and his or her execution of the Tax Certificate and Agreement shall be conclusive evidence of such approval. The Authorized Officers shall deliver an executed and undated copy of the Tax Certificate and Agreement on or prior to the date requested by UAMPS, and UAMPS is hereby be authorized to deliver the Tax Certificate and Agreement, dated the issue date of the Prepay Bonds, to SEA on behalf of the Participant.

Section 3. Other Actions With Respect to the Tax Certificate and Agreement. The Authorized Officers shall take all action necessary or reasonably required to carry out and give effect to the Tax Certificate and Agreement including adjusting the priority of the Participant's resources within the UAMPS Power Pool to ensure the Qualified Use of the electricity from the Participant's Entitlement Share in the Project.

Section 4. Severability. If any section, paragraph, clause, or provision of this resolution shall for any reason be held to be invalid or unenforceable, the invalidity or unenforceability of such section, paragraph, clause, or provision shall not affect any of the remaining provisions of this resolution.

Section 5. Effective Date. This resolution shall be effective immediately upon its approval and adoption.

ADOPTED AND APPROVED by the Governing Body of the City of Santa Clara, Utah, this day, _____.

CITY OF SANTA CLARA, UTAH

By _____
Mayor

[SEAL]

ATTEST:

_____
City Recorder

EXHIBIT A

[TAX CERTIFICATE AND AGREEMENT]

TAX CERTIFICATE AND AGREEMENT

This Tax Certificate and Agreement is executed in connection with the Commodity Supply Contract (the *"Supply Contract"*) between Southeast Energy Authority, a Cooperative District (*"SEA"*) and Utah Associated Municipal Power Systems (*"UAMPS"*).

WHEREAS, _____ (the *"Participant"*) is a member of UAMPS and has entered into the Master Firm Power Supply Agreement dated as of _____, and [describe Red Mesa, Steel Solar 1A and Steel Solar 1B transaction schedules as applicable] (the *"Firm PSA"*)[1] with UAMPS pursuant to which the Participant has an Entitlement Share (as defined in the Firm PSA) in the energy, environmental attributes and other benefits received by UAMPS under the [describe Red Mesa, Steel Solar 1A and Steel Solar 1B PPAs as applicable] (the *"PPA"*)[2];

WHEREAS, the Participant understands that in order to provide a discounted price for a portion of the electricity sold to the Participant under the Firm PSA (such portion is referred to below as the *"Prepaid Portion"*), UAMPS will participate in a prepayment transaction being undertaken by SEA by (a) assigning its rights to a portion of the electricity to be delivered under the PPA to the commodity supplier under the prepayment transaction and (b) entering into the Supply Contract under which it will purchase the assigned electricity from SEA at a discounted price for sale to the Participant under the Firm PSA;

WHEREAS, the Participant further understands that SEA will issue bonds to finance a prepayment for the electricity that it sells to UAMPS under the Supply Contract (the *"Prepay Bonds"*) with the intention that the interest on the Prepay Bonds will qualify for tax exemption under Section 103 of the Internal Revenue Code of 1986, as amended (the *"Code"*); and

WHEREAS, the Participant acknowledges that its use of the Prepaid Portion of the electricity it purchases under the Firm PSA is subject to certain restrictions that are necessary to establish and maintain the tax-exempt status of interest on the Prepay Bonds;

ACCORDINGLY AND IN FURTHERANCE OF THE FOREGOING, THE PARTICIPANT HEREBY CERTIFIES AND AGREES AS FOLLOWS:

1. The Participant is a political subdivision of the State of _____,[3] and owns and operates a municipal utility system that provides electricity service to retail customers located in an established service area (the *"System"*).

---

1 For Participants in more than one transaction schedule, the term "Firm PSA" will apply separately to each transaction schedule.

2 For Participants in more than one transaction schedule, the term "PPA" will apply separately to each Power Purchase Agreement.

3 Utah for all Participants, except California for TDPUD and Nevada for Fallon.

2. The Participant will (a) use all of the Prepaid Portion of the electricity it acquires under the Firm PSA in a Qualified Use (as defined below), (b) not take any action (or make any allocation) that is inconsistent with the Qualified Use of the Prepaid Portion of such electricity, (c) not take or omit to take any action with respect to the Prepaid Portion of such electricity, its Entitlement Share or its System which could adversely affect the tax-exempt or tax-advantaged status of interest on the Prepay Bonds or any refunding bonds issued by SEA, (d) take, and pay the costs of, such remedial actions as may be necessary to maintain the tax-exempt or tax-advantaged status of interest on the Prepay Bonds or any refunding bonds in the event of its failure to use such electricity in a Qualified Use, and (e) act in accordance with such reasonable written instructions as may be provided by SEA (through UAMPS) from time to time in order to maintain the tax exempt or tax-advantaged status of the Prepay Bonds.

3. *"Qualified Use"* means the sale of electricity to retail customers located within the "electricity service area" of a municipal utility pursuant to generally applicable and uniformly applied rate schedules or tariffs; *provided* that: (a) "Qualified Use" shall not include any sale of electricity that gives rise to "private business use" or a "private loan" within the meaning of Section 141 of the Code; and (b) "Qualified Use" shall include such additional uses of electricity as may be approved by SEA (through UAMPS) with a favorable opinion of bond counsel. For purposes of this definition: (i) "electricity service area" has the meaning assigned to such term in U.S. Treasury Regulation Section 1.148-1(e)(2)(iii); and (ii) a "municipal utility" is a state or local government unit that owns and operates an electric distribution utility.

4. In each of the five calendar years preceding 2024, the amount of electricity sold to retail customers in the Participant's electricity service area has equaled or exceeded the amount of the Prepaid Portion of the electricity attributable to its Entitlement Share under the Firm PSA (excluding the amount of electricity that the Participant was obligated to take under a long term agreement that was either (i) purchased pursuant to a long term prepaid agreement using the proceeds of tax-exempt or tax-advantaged obligations, or (ii) generated from gas that a person is obligated to take under a long term agreement that was purchased pursuant to a long term prepaid agreement using the proceeds of tax-exempt or tax-advantaged obligations), and it anticipates this to be the case in 2024.

5. The Participant expects to make the required payments under the Firm PSA solely from the current revenues of the System.

Dated: _____, 2024.

[NAME OF PARTICIPANT]

By: _____
[Name]
[Title]

Mayor
Rick Rosenberg

City Manager
Brock Jacobsen

CITY OF
SANTA CLARA
FOUNDED 1854

City Council
Jarett Waite
Ben Shakespeare
Christa Hinton
Janene Burton
Dave Pond

CITY COUNCIL

Meeting Date: 10/Apr/24 **Agenda Item:** 6

Applicant: N/A **Requested by:** Cody Mitchell

Subject: Agreement For Professional

Service

Description:

This agenda item is to discuss an agreement with Shums Coda Associates to utilize their service as a 3rd party inspection agency. Currently, HB 185 mandates that municipalities have (3) third party firms in place to handle inspection timeframes exceeding 3-days. This agreement will aid the Building Department with rare coverage challenges, requesting inspections services on an as needed basis while initiating a measure toward HB 185 compliance.

Recommendation:
Approval **Cost:** N/A

Attachments: N/A

Legal Approval: Yes

Finance Approval: N/A

Budget Approval: Yes

Shums Coda Associates, INC

PROFESSIONAL SERVICES AGREEMENT

This Agreement is made and entered into as of the ____ day of _____, 2024, by and between the Jurisdiction of Santa Clara City, UT ("Jurisdiction") and Shums Coda Associates, INC ("Consultant").

WHEREAS, Consultant is specially trained, experienced and competent to perform the special services which will be required by this Agreement; and

WHEREAS, Consultant is willing to render the professional services described herein on the following terms and conditions.

NOW, THEREFORE, the parties agree as follows:

1. **Scope of Services:** The Consultant shall furnish the following services in a professional manner:

   "Consultant shall perform the services described on Exhibit A which is attached hereto and incorporated herein by reference. Consultant shall provide said services at the time, place, and in the manner specified in Exhibit A, subject to the direction of the Jurisdiction through its staff that it may provide from time to time."

2. **Time of Performance:** The services of Consultant are to commence upon execution of this Agreement and shall continue until all authorized work is approved by Jurisdiction. Consultant shall not be responsible for delays caused by circumstances beyond its reasonable control.

3. **Compensation:** Compensation to be paid to Consultant shall be in accordance with the Schedule of Fees set forth in Exhibit B, which is attached hereto and incorporated herein by reference. Payment by Jurisdiction under this Agreement shall not be deemed a waiver of defects, even if such defects were known to Jurisdiction at the time of payment.

4. **Method of Payment:** Consultant shall submit monthly billings to Jurisdiction describing the work performed during the preceding month. Consultant's bills shall include a brief description of the services performed, the date the services were performed, the number of hours spent, and by whom, and a description of any reimbursable expenditures. Jurisdiction shall pay Consultant no later than 30 days after approval of the monthly invoice by Jurisdiction staff. When payments made by Jurisdiction equal 90% of the maximum fee provided for in this Agreement, no further payments shall be made until the final work under this Agreement has been accepted by Jurisdiction.

5. **Ownership of Documents:** All plans, studies, documents, and other writings prepared by and for Consultant, its officers, employees and agents and subcontractors in the course of implementing this Agreement, except working notes and internal documents, shall become the property of the Jurisdiction upon payment to Consultant for such work, and the Jurisdiction shall have the sole right to use such materials in its discretion without further compensation to Consultant or to any other party. Consultant shall, at Consultant's expense, provide such reports, plans, studies, documents, and other writings to Jurisdiction upon written request.

6. **Independent Contractor:** It is understood that Consultant, in the performance of the work and services agreed to be performed, shall act as and be an independent contractor and shall not act as an agent or employee of the Jurisdiction. Consultant shall obtain no rights to retirement benefits

or other benefits which accrue to Jurisdiction's employees, and Consultant hereby expressly waives any claim it may have to any such rights.

7. **Interest of Consultant:** Consultant (including principals, associates, and professional employees) covenants and represents that it does not now have any investment or interest in real property and shall not acquire any interest, direct or indirect, in the area covered by this Agreement or any other source of income, interest in real property or investment which would be affected in any manner or degree by the performance of Consultant's services hereunder. Consultant further covenants and represents that in the performance of its duties hereunder no person having any such interest shall perform any services under this Agreement.

   Consultant is not a designated employee within the meaning of the Political Reform Act because Consultant:

   a. will conduct research and arrive at conclusions with respect to his/her rendition of information, advice, recommendation, or counsel independent of the control and direction of the Jurisdiction or of any Jurisdiction official, other than normal agreement monitoring; and,

   b. possesses no authority with respect to any Jurisdiction decision beyond rendition of information, advice, recommendation or counsel. [FPPC Reg. 18700(a)(2)].

8. **Professional Ability of Consultant:** Jurisdiction has relied upon the professional training and ability of Consultant to perform the services hereunder as a material inducement to enter into this Agreement. Consultant shall, therefore, provide properly skilled professional and technical personnel to perform all services under this Agreement. All work performed by Consultant under this Agreement shall be in accordance with applicable legal requirements and shall meet the standard of quality ordinarily to be expected of competent professionals in Consultant's field of expertise.

9. **Indemnity:** Consultant agrees to defend, indemnify, and hold harmless the Jurisdiction, its officers, agents, employees and volunteers from and against any and all claims, demands, actions, losses, damages, injuries, and liability, including attorney's fees, direct or indirect (including any and all costs and expenses in connection therein), arising out of the performance of this Agreement to the extent caused by the negligent acts, errors, or omissions of Consultant. Jurisdiction also agrees to defend, indemnify, and hold harmless the Consultant, its officers, agents, employees and volunteers from and against any and all claims, demands, actions, losses, damages, injuries, and liability, including attorney's fees, direct or indirect (including any and all costs and expenses in connection therein), arising out of the performance of this Agreement to the extent caused by the negligent acts, errors, or omissions of the Jurisdiction.

10. **Insurance:** Consultant, at Consultant's own cost and expense, shall procure and maintain, for the duration of the contract, the following insurance policies with insurers possessing a Best's rating of no less than A:

    a. **Workers' Compensation Coverage:** Consultant shall maintain Workers' Compensation Insurance and Employer's Liability Insurance for his/her employees in accordance with the laws of the State of Utah. In addition, Consultant shall require each subcontractor to similarly maintain Workers' Compensation Insurance and Employer's Liability Insurance in accordance with the laws of the State of Utah for all of the subcontractor's employees. Any notice of cancellation or non-renewal of all Workers' Compensation policies must be received by the Jurisdiction at least thirty (30) days prior to such change.

    b. **General Liability Coverage:** Consultant shall maintain commercial general liability insurance in an amount not less than one million dollars ($1,000,000) per occurrence for bodily injury, personal injury, and property damage. If a commercial general liability insurance form or other form with a general aggregate limit is used, either the general

aggregate limit shall apply separately to the work to be performed under this Agreement or the general aggregate limit shall be at least twice the required occurrence limit.

c. **Automobile Liability Coverage:** Consultant shall maintain automobile liability insurance covering bodily injury and property damage for all activities of the consultant arising out of or in connection with the work to be performed under this Agreement, including coverage for owned, hired and non-owned vehicles, in an amount of not less than one million dollars ($1,000,000) combined single limit for each occurrence.

d. **Professional Liability Coverage:** Consultant shall maintain professional errors and omissions liability for protection against claims alleging negligent acts, errors or omissions which may arise from Consultant's operations under this Agreement, whether such operations be by the Consultant or by its employees, subcontractors, or sub-consultants. The amount of this insurance shall not be less than one million dollars ($1,000,000) on a claims-made annual aggregate basis.

e. **Policy Endorsements:** Each general liability and automobile liability insurance policy shall be endorsed with the following specific language:

1) The Jurisdiction, its elected or appointed officers, officials, employees, agents and volunteers are to be covered as additional insured with respect to liability arising out of work performed by or on behalf of the Consultant, including materials, parts or equipment furnished in connection with such work or operations.

2) This policy shall be considered primary insurance as respects the Jurisdiction, its elected or appointed officers, officials, employees, agents, and volunteers. Any insurance maintained by the Jurisdiction, including any self-insured retention the Jurisdiction may have, shall be considered excess insurance only and shall not contribute with it.

3) This insurance shall act for each insured and additional insured as though a separate policy had been written for each, except with respect to the limits of liability of the insuring company.

4) Any failure to comply with reporting provisions of the policies shall not affect coverage provided to the Jurisdiction, its elected or appointed officers, officials, employees, agents or volunteers.

5) The insurance provided by this policy shall not be suspended, voided, canceled, or reduced in coverage or in limits except after thirty (30) days written notice has been received by the Jurisdiction.

f. **Deductibles and Self-Insured Retentions:** Any deductibles or self-insured retentions must be declared to and approved by the Jurisdiction. At the Jurisdiction's option, Consultant shall demonstrate financial capability for payment of such deductibles or self-insured retentions.

g. **Certificates of Insurance and Endorsements:** Consultant shall provide certificates of insurance with original endorsements to Jurisdiction as evidence of the insurance coverage required herein. Certificates of such insurance shall be filed with the Jurisdiction on or before commencement of performance of this Agreement. Current certification of insurance shall be kept on file with the Jurisdiction at all times during the term of this Agreement.

11. **Compliance with Laws:** Consultant shall use the standard of care in its profession to comply with all applicable federal, state and local laws, codes, ordinances and regulations.

12. **Licenses:** Consultant represents and warrants to Jurisdiction that it has all licenses, permits, qualifications, insurance and approvals of whatsoever nature which are legally required of Consultant to practice its profession. Consultant represents and warrants to Jurisdiction that consultant shall, at its sole cost and expense, keep in effect or obtain at all times during the term of this Agreement, any licenses, permits, insurance and approvals which are legally required of Consultant to practice its profession. Consultant shall maintain a business license, if required.

13. **Controlling Law Venue:** This Agreement and all matters relating to it shall be governed by the laws of the State of Utah and any action brought relating to this Agreement shall be held exclusively in a state court in the appropriate Jurisdiction.

14. **Written Notification:** Any notice, demand, request, consent, approval or communication that either party desires or is required to give to the other party shall be in writing and either served personally or sent prepaid, first-class mail. Any such notice, demand, etc., shall be addressed to the other party at the address set forth herein below. Either party may change its address by notifying the other party of the change of address. Notice shall be deemed communicated within 48 hours from the time of mailing if mailed as provided in this section.

If to Jurisdiction:	**Santa Clara City** 2603 Santa Clara Drive Santa Clara, UT 84765
If to Consultant:	**Shums Coda Associate, INC** 5776 Stoneridge Mall Rd., Ste. #150 Pleasanton, CA 94588

15. **Consultant's Books and Records:**

a. Consultant shall maintain any and all ledgers, books of account, invoices, vouchers, canceled checks, and other records or documents evidencing or relating to charges for services, or expenditures and disbursements charged to Jurisdiction for a minimum period of three (3) years, or for any longer period required by law, from the date of final payment to consultant to this Agreement.

b. Consultant shall maintain all documents and records which demonstrate performance under this Agreement for a minimum period of three (3) years, or for any longer period required by law, from the date of termination or completion of this Agreement.

c. Any records or documents required to be maintained pursuant to this Agreement shall be made available for inspection or audit, at any time during regular business hours, upon written request by the Jurisdiction Manager, Jurisdiction Attorney, Jurisdiction Auditor or a designated representative of these officers. Copies of such documents shall be provided to the Jurisdiction for inspection when it is practical to do so. Otherwise, unless an alternative is mutually agreed upon, the records shall be available at Consultant's address indicated for receipt of notices in this Agreement.

d. Where Jurisdiction has reason to believe that such records or documents may be lost or discarded due to dissolution, disbandment or termination of Consultant's business, Jurisdiction may, by written request by any of the above named officers, require that custody of the records be given to the Jurisdiction and that the records and documents be maintained. Access to such records and documents shall be granted to any party authorized by Consultant, Consultant's representatives, or Consultant's successor-in-interest.

16. **Entire Agreement:** This Agreement constitutes the complete and exclusive statement of Agreement between the Jurisdiction and Consultant. All prior written and oral communications, including correspondence, drafts, memoranda, and representations, are superseded in total by this Agreement.

17. **Amendments:** This Agreement may be modified or amended only by a written document executed by both Consultant and Jurisdiction and approved as to form by the Jurisdiction Attorney.

18. **Waiver:** No failure on the part of either party to exercise any right or remedy hereunder shall operate as a waiver of any other right or remedy that party may have hereunder.

19. **Litigation Expenses and Attorneys' Fees:** If either party to this Agreement commences any legal action against the other party arising out of this Agreement, the prevailing party shall be entitled to recover its reasonable litigation expenses, including court costs, expert witness fees, discovery expenses, and attorney's fees.

20. **Execution:** This Agreement may be executed in several counterparts, each of which shall constitute one and the same instrument and shall become binding upon the parties when at least one copy hereof shall have been signed by both parties hereto. In approving this Agreement, it shall not be necessary to produce or account for more than one such counterpart.

21. **Assignment & Subcontracting:** The parties recognize that a substantial inducement to Jurisdiction for entering into this Agreement is the professional reputation, experience and competence of Consultant. Assignments of any or all rights, duties or obligations of the Consultant under this Agreement will be permitted only with the express consent of the Jurisdiction. Consultant shall not subcontract any portion of the work to be performed under this Agreement without the written authorization of the Jurisdiction. If Jurisdiction consents to such subcontract, Consultant shall be fully responsible to Jurisdiction for all acts or omissions of the subcontractor. Nothing in this Agreement shall create any contractual relationship between Jurisdiction and consultant nor shall it create any obligation on the part of the Jurisdiction to pay or to see to the payment of any monies due to any such subcontractor other than as otherwise is required by law.

22. **Termination:** This Agreement may be terminated immediately for cause or by either party without cause upon fifteen days' written notice of termination. Upon termination, Consultant shall be entitled to compensation for services performed up to the effective date of termination.

IN WITNESS WHEREOF, the parties have caused this Agreement to be executed on the date first written above.

JURISDICTION:	**CONSULTANT:**
Signature: _____	Signature: _____
Print: _____	Print: _____
Title: _____	Title: _____

Attachments: Exhibit A - Scope of Services
Exhibit B - Schedule of Fees
Exhibit C - Schedule of Charges

EXHIBIT A
SCOPE OF SERVICES

Building Plan Review Services

Plan Review: Consultant will perform plan reviews to cover one or more of the following disciplines: architectural, structural, mechanical, electrical, plumbing, accessibility, fire, engineering, and energy requirements - all as modified or amended by the Jurisdiction, and per the Jurisdiction's currently adopted building codes.

Comment Lists and Plans Delivery: The Jurisdiction is responsible for notifying SCA when plans are ready for review, electronic files are ready for download. Plan reviews result in typed lists of comments which refer to specific details and drawings, and reference applicable code sections.

Turn-Around Schedules: SCA will generally complete plan reviews per the following schedule.

	Number of Working Days	
	Initial Check (1st):	**Recheck(s):**
Residential		
New Single-Family Dwellings	10	5
New Multi-Family Townhomes/ Apartments (Standard)	10	5
New Multi-Family Apartments (Large Scale)	15	10
Addition/Remodel	10	5
Commercial		
New Construction	10-15	5-10
Addition/Remodel	10	5

Other turnaround schedules can be provided to accommodate special projects or requests of the Jurisdiction staff, as mutually agreed upon.

Technical Support: When mutually agreed between the Jurisdiction and Consultant as vital to project success, SCA staff will attend pre-construction or pre-design meetings, field visits upon request, and provide support for field inspection personnel on an as-needed basis.

Inspection Services

Consultant will provide building inspector(s) as requested by the Jurisdiction. Inspector(s) will report directly to the Jurisdiction Building Official or other person designated by the Jurisdiction for all project-related work.

In general, the inspection services to be provided may include, but are not limited to, field observation of all construction activity, preparation of daily reports, review of submittals and other duties as assigned.

Other Services

Consultant will provide other services as specifically requested by the Jurisdiction. Additional services provided shall have scope and compensation mutually agreed upon by Consultant and Jurisdiction prior to commencement of said services.

EXHIBIT B
SCHEDULE OF FEES

Building Plan Review Fees

Fees for comprehensive, large-scaled, commercial, or multi-family residential plan reviews, performed at SCA offices, will be equal to Fifty percent (50%) of the plan review fees as calculated per the Jurisdiction. The Jurisdiction will provide SCA with jurisdiction plan review fees (project–by-project) for use in calculating SCA's fees based on current valuation table published by ICC and the 1997 UBC Table 1-A.

Fees for small-scaled commercial plan reviews will be completed for an hourly rate of $95/hour for the first three reviews or attached rates per Exhibit C (as mutually agreed upon with the Jurisdiction).

Fees for small residential projects (new and remodeled single-family homes) will be reviewed for a fixed fee of $500 per plan review.

The above fee covers all services associated with the typical plan review, including:

- Delivery of design documents to the jurisdiction.
- First, second, and third abbreviated reviews, if necessary, to approve projects
- Pre-application, pre-construction, or additional meeting attendance that is necessary for unusual or complex projects.

Additional plan reviews (extensive third reviews or more) that may be required will be charged on an hourly rate (per attached Exhibit C – Schedule of Charges, when mutually agreed upon with the Jurisdiction).

Inspection Fees for Building Departments

On-site field inspection related support services are performed on an hourly fee basis as listed in the attached Schedule of Charges (Exhibit C).

EXHIBIT C
SCHEDULE OF CHARGES

Personnel Charges – Plan Review and Inspection Services

Personnel Description:	**Hourly Billing Rate:**
Plan Review Structural/Engineer	$125
Building Plans Examiner	$95
Fire Protection Plan Examiner	$90
Fire Protection Engineer	$TBD
Clerical Support	$45
*Building Inspector II (8-way certified)	$90

*Minimum of 2-hour inspection time.

Overtime will not be charged for any plan review services, but SCA does reserve the right to negotiate additional fees for major re-designs or consistently incomplete responses to initial plan review comments (as agreed upon mutually with the jurisdiction). Inspection and other services will be charged at 150% of the standard hourly rates (as agreed upon mutually with the jurisdiction).

**** Hours for inspections in excess of 8 hours (per day) will be billed as overtime at the rate shown above. When inspection overtime is requested, on days when inspector has not already performed inspections on the site (i.e., weekends, holidays, etc.), inspection overtime services will be provided in 4-hour minimum segments.**

Reimbursable rates for travel shall be negotiated between jurisdiction and consultant.