CITY OF SARATOGA SPRINGS
CITY COUNCIL MEETING

Tuesday, June 17, 2014

Meeting held at the City of Saratoga Springs City Offices

1307 North Commerce Drive, Suite 200, Saratoga Springs, Utah 84045

AMENDED CITY COUNCIL AGENDA

Councilmembers may participate in this meeting electronically via video or telephonic conferencing.

POLICY SESSION- Commencing at 7:00 p.m.

- Call to Order.
- Roll Call.
- Invocation / Reverence.
- Pledge of Allegiance.
- Awards, Recognitions and Introduction.
- Public Input - Time has been set aside for the public to express ideas, concerns, and comments. Please limit repetitive comments.

POLICY ITEMS

1. Consent Calendar:
   a. Change order for the Pioneer Crossing waterline extension.
   b. Preliminary and Final Plat for North Saratoga Center Plat A located at 2175 North Stagecoach Drive, Ryan Bybee, applicant.
   c. Site Plan and Conditional Use permit for Unique Autobody located at 2175 North Stagecoach Drive, Andrew Bollschweiler, applicant.
   d. Resolution R14-31 (6-17-14): A resolution appointing Katie Leavitt as a member to the Library Advisory Board.
   e. Approval of Minutes:
      i. March 25, 2014.
      ii. April 29, 2014.
      iii. June 3, 2014.
2. Public Hearing: Municipal Budget, Tax Rate, Pay plan and Compensation for Elected and Appointed Officials for Fiscal Year 2014-2015
   a. Ordinance 14-15 (6-17-14): An ordinance adopting the Budget, Tax Rate, Pay Plan and Compensation for Elected and Appointed Officials for Fiscal Year 201-2015.
3. Public Hearing: Legacy Farms Community Plan and the Village Plan located at 400 South Redwood Road, DR Horton, applicant.
4. Public Hearing: Rezone and Concept Plan for Beacon Point located at 4400 South 100 West, Paul Watson, applicant.
5. Site Plan and Conditional Use permit for Platinum Car Wash located at 1413 North West Commerce Drive, Gary Hadfield, applicant.
6. Concept Plan for Sierra Estates Senior Housing located at 350 West 400 North, Ross Welch, applicant.
7. Revised Phasing Plan for River Heights located at approximately 250 East Alhambra Drive, Bach Investments, applicant.
8. Revised Phasing Plan for Stillwater located at approximately 2700 South Stillwater Drive, Land Solutions Partners, applicant.
9. Amendments to the City of Saratoga Springs City Code, Chapter 8.02 (Public Utilities and Services) establishing additional regulations of septic systems in the City of Saratoga Springs, Utah.
   a. Ordinance 14-16 (6-17-14): An ordinance adopting amendments to the Chapter 8.02 of the City of Saratoga Springs Code establishing additional regulations of septic systems in the City of Saratoga Springs, Utah.
10. Resolution R14-32 (6-17-14): A resolution amending the consolidated fee schedule to include fees for reviewing grading permits pursuant to Chapter 18.05 of the City Code.
11. Amendments to the City of Saratoga Springs Standard Technical Specifications and Drawings.
    a. Ordinance 14-17 (6-17-14): An ordinance adopting amendments to the City of Saratoga Springs Standard Technical Specifications and drawings.
12. Amendments to the City of Saratoga Springs City Code, Chapter 20, Administrative Code Enforcement.
    a. Ordinance 14-18 (6-17-14): An ordinance of the City of Saratoga Springs adopting amendments to Chapter 20, Administrative Code Enforcement.
13. Approval of Reports of Action.
14. Motion to enter into closed session for the purchase, exchange, or lease of property, pending or reasonably imminent litigation, the character, professional competence, or physical or mental health of an individual.
15. Adjournment.

Notice to those in attendance:

- Please be respectful to others and refrain from disruptions during the meeting.
- Please refrain from conversing with others as the microphones are sensitive and can pick up whispers in the back of the room.
- Keep comments constructive and not disruptive.
- Avoid verbal approval or dissatisfaction of the ongoing discussion (e.g., applauding or booing).
- Please silence all cell phones, tablets, beepers, pagers, or other noise making devices.
- Refrain from congregating near the doors to talk as it can be noisy and disruptive.

In compliance with the Americans with Disabilities Act, individuals needing special accommodations (including auxiliary communicative aids and services) during this meeting should notify the City Recorder at 766-9793 at least one day prior to the meeting.

City Council
Staff Report

Author: Jeremy D. Lapin, P.E., City Engineer
Subject: Pioneer Crossing Extension Waterline Betterment Design
Date: June 17, 2014
Type of Item: Contract Amendment

Description:

A. Topic:

This item is for the approval of a amendment to the existing contract in the amount of $6,600 to Epic Engineering for additional work for the design of a waterline connection to the Central Utah Water Conservancy District (CUWCD) turn-out vault.

B. Background:

On January 7, 2014, the City Council awarded the design of the culinary water betterments on the Pioneer Crossing Project to Epic Engineeing in the amount of $11,700. This betterment will make a connection of the City's culinary water system to the CUWCD system near the intersection of Redwood Road and Pioneer Crossing.

C. Analysis:

During the design process UDOT required several modifications to the submitted waterline plans including requiring that epic redesign the plan in microstation format resulting is significantly more time that Epic had originally contracted for. In addition Epic Engineering spent additional time coordinating with CUWCD to meet their design and material preferences.

Recommendation:

Staff recommends that the City Council approve an amendment to the contract with Epic Engineering for the Pioneer Crossing Extension water betterments in the amount of $6,600

EXHIBIT "A"

PROJECT TASK ORDER NO. _____

Pioneer Crossing Extension Water Betterment – Additional Design & UDOT Coordination

CITY OF SARATOGA SPRINGS requests EPIC ENGINEERING, PC to perform civil engineering services under the terms of the existing general engineering services agreement on this the 10th day of April, 2014 for the following scope of work:

Pioneer Crossing Extension Water Betterment with additional water main design including : rework plan in microstation, waterline relocation per City/SLR recommendation, Change to design pressures, CUWCD preferences on Design details and material selection, additional coordination/adjustment per UDOT request.

The end results or product associated with this scope of work will include the following (if applicable):

_____

_____

_____

The proposed scope of work will be completed within _____ business days (if applicable) after Epic Engineering P.C. has received this signed contract.

Engineering fees associated with the work will (check one):

- ✓ A) be performed for a lump sum of $6,600.
- ☐ B) be billed at an hourly rate, as set forth in Exhibit "B" to the Engineering Services Agreement, estimated at $, or
- ☐ C) be performed at the existing hourly rate as set forth in Exhibit "B" to the Engineering Services Agreement.

IN WITNESS WHEREOF, the parties have executed this Project Task Order effective the date and year set forth above.

"Engineer"	**"Client/Owner"**
Epic Engineering, PC **A Utah Professional Corporation**	**City of Saratoga Springs, Utah**
By: _____	**By:** _____
Korey C. Walker, P.E. **President**	**Mark Christensen, City Manager**
Date: 4-15-14	**Date:** _____

EXHIBIT "B"

In consideration of the above Civil Engineering Service, Client/Owner shall pay Engineer compensation on a time basis in accordance with the following Fee Schedule:

Job Description	Hourly Rate
Principal	$145.00
Associate	$130.00
Senior Engineer	$120.00
Project Manager	$117.00
Project Engineer	$ 98.00
Engineer w/P.E.	$ 90.00
Engineer w/F.E.	$ 80.00
Engineer Intern	$ 60.00
Senior Planner	$115.00
Planner	$ 85.00
Intern Planner	$ 60.00
Design Tech	$ 92.00
Sr. Cadd Technician	$ 82.00
Cadd Tech	$ 75.00
Special/Building Inspector	$ 75.00
Sr. Field Technician	$ 63.00
Material Technician	$ 57.00
Field Technician	$ 51.00
Licensed Surveyor	$104.00
Surveyor w/LSIT	$ 92.00
Surveyor Assistant	$ 85.00
1 Party Survey Crew	$105.00
2 Party Survey Crew	$140.00
3 Party Survey Crew	$172.00
Clerical	$ 49.00
Finance Charge	18%
Materials Testing	
Concrete Cylinder Break (3 Minimum)	$ 14.25
Concrete Air Test	$ 19.00
Concrete Slump Test	$ 19.00
Cast Concrete Cylinders	$ 22.00
Concrete Yield	$ 32.00
Gradation	$ 57.00
Liquid Limit	$ 28.50
Plastic Index	$ 28.50
Soil Classification	$ 38.00
Flats & Elongated Test	$ 57.00
Unit Weight	$ 28.50
Density Test (Over 3)	$ 18.00
1 Point Proctor	$ 57.00
Wear Test (LA Rattler)	$114.00
T-99 Proctor	$128.25
T-180 Proctor	$128.25
Specific Gravity – Course	$ 57.00
Specific Gravity – Fine	$ 57.00
Rices Specific Gravity on Asphalt	$ 71.25
California Bearing Ratio	$128.25
Absorption	$ 57.00
Percolation	Hourly
Briquettes (Set of 3)	$128.25
Asphalt Extraction Analysis with Gradation	$ 99.75
Specific Gravity of Cores	$ 57.00
Sand Equivalent Test	$ 71.25
Cores	
A. Concrete	Hourly
B. Asphalt (4 Minimum)	Hourly
Indirect Expenses	**Rate**
Mileage	$ 0.55 per mile*

Copies :

A. B&W 8½ X 11
   $ 0.17 per printed page
B. Color 8½ X 11
   $ 0.56 per printed page
C. B&W 11 X 17
   $ 0.22 per printed page
D. Color 11 X 17
   $ 1.12 per printed page
E. Regular 24 X 36
   $ 3.50 per sheet
F. Velum 24 X 36
   $ 10.00 per sheet
G. Mylar 24 X 36
   $ 28.00 per sheet
H. Regular 34 X 44
   $ 11.20 per sheet
I. Velum 34 X 44
   $ 20.00 per sheet
J. Mylar 34 X 44
   $ 56.00 per sheet

Note: Irregularly sized paper will be round up to the next size

Shipping & Contract Services are billed at cost plus 10%.

***Mileage rate will be adjusted according to IRS mileage reimbursement rate.**

(Fee Schedule applicable through December 31, 2012)

City Council
Staff Report

Preliminary and Final Plat
North Saratoga Center Plat A
June 17, 2014
Public Meeting

Report Date:	June 10, 2014
Applicant:	Cadence Capital, LLC / Ryan Bybee
Owner:	Cadence Capital, LLC
Location:	~2175 North Redwood Road (east side of Redwood)
Major Street Access:	Redwood Road
Parcel Number(s) & Size:	A portion of 58:023:0210 (6.49 acres)
Land Use Map Designation:	Office Warehouse
Parcel Zoning:	OW, Office Warehouse
Adjacent Zoning:	OW & A
Current Use of Parcel:	Vacant land and storage units
Adjacent Uses:	Undeveloped property and Auto Repair facility
Previous Meetings:	(see section B of this report)
Previous Approvals:	(see section B of this report)
Land Use Authority:	City Council
Future Routing:	Plat Recordation with Utah County
Author:	Scott Langford, Senior Planner

A. Executive Summary:

This is a request for approval of the Preliminary and Final Plat for the North Saratoga Center Plat A located at approximately 2175 North Redwood Road. This is a 2 lot subdivision plat; Lot 1 is 1.66 acres and Lot 2 is 4.83 acres. Lot 1 is currently vacant but is proposed to be developed in the near future with an auto body repair shop (Unique Auto Body). Lot 2 will be used for self-storage units (Extra Space Storage).

Recommendation:

Staff recommends that the City Council conduct a public hearing, take public comment, and/or discuss the proposed preliminary plat at their discretion, and choose from the options in Section "I" of this report. Options include a motion by the City Council for approval as proposed, continuing the application, or a motion for denial based on non-compliance with findings of specific criterion.

B. Background: The following is a summary of previous approvals and actions taken on this property:

- August 3, 2004 PC and September 14, 2004 CC: Master Development Plan and Rezone. The property was rezoned from A, Agricultural to C, Commercial. The Master Plan included a Concept

Scott Langford, AICP, Senior Planner
slangford@saratogaspringscity.com
1307 North Commerce Drive, Suite 200 • Saratoga Springs, Utah 84045
801-766-9793 x 116 • 801-766-9794 fax

Plan and architecture for the commercial development, but did not address the rear two-thirds of the property (subject property) other than with a note on the plan stating "future development."

- October 13, 2009 CC: Site Plan approval for the North Saratoga Center Office Warehouse Site Plan.
- February 9, 2010 CC: Conditional Use Permit approved to allow self-storage units on the subject property.
- June 21, 2011 CC: Amended Site Plan Approval for the North Saratoga Center Office Warehouse Site Plan
- May 22, 2014 PC: Preliminary Plat was reviewed by the Planning Commission. The Planning Commission forwarded a positive recommendation to the City Council (6-0 vote).

C. **Specific Request:** The applicant is requesting approval of the Preliminary and Final Plat for North Saratoga Center Plat A. This is a 2 lot subdivision plat; Lot 1 is 1.66 acres and Lot 2 is 4.83 acres (total 6.49 acres).

D. **Community Review:** This item was noticed as a public hearing in the *Daily Herald*; and notices were mailed to all property owners within 300 feet of the subject property as part of the Planning Commission public hearing. As of the completion of this report, the only public comment regarding this application came from the property owner to the south. He only had general questions and was not concerned with the proposed site plan amendment or the proposed auto body shop.

E. **Process:** Section 19.13.04 of the City Code states that Subdivision Plats require a public hearing with the Planning Commission and that the City Council is the approval authority. Section 19.13.04.1 is reviewed in-depth below.

1. The table in 19.13.04.1. identifies the approval authority for Preliminary Plats and requires a public hearing with the Planning Commission and final approval by the City Council.

   Finding: complies. A public hearing with the Planning Commission was held on May 22, 2014. The Planning Commission forwarded a positive recommendation for the approval of the Preliminary Plat.

2. A neighborhood meeting is required for multi-family or non-residential development proposals that are adjacent to developed property in a residential zone.

   Finding: not applicable. This application is not adjacent to any residential zone that is developed; therefore a neighborhood meeting is not required.

3. A properly completed application is required with supporting materials and appropriate fees.

   Finding: complies. The developer has submitted a complete application with appropriate fees.

4. Notice of the public hearing is required to be provided at least 10 calendar days before the public hearing, by: posting the notice in at least three public locations in the City, or on the City's website; publishing the notice on the Utah Public Notice Website; publishing the notice in a newspaper of general circulation; and mailing the notice to property owners affected by the proposal and property owners within 300 feet of the property.

   Finding: complies. The notice requirements above have been met.

5. The Planning Commission is required to conduct a public hearing on the proposed development application. At the public hearing the Planning Commission shall take testimony, determine if the

proposed development complies with the applicable requirements, and take action on the application. In the case of Preliminary Plats, the City Council is the land use authority and the Planning Commission shall make a recommendation to the City Council and the City Council shall act on the application.

Finding: complies. The Planning Commission has held a public hearing on May 22, 2014 and they have forwarded a positive recommendation to the City Council regarding this application.

6. A concept plan is required before preliminary plat review.

Finding: complies. The proposed plat simply draws a property line where the previously reviewed and approved site plan had a phasing line. The proposed plat does not introduce or extend a new use from what has already been reviewed and approved; therefore this requirement has been met.

F. **General Plan:** The General Plan designates the site for Office Warehouse type development. The proposed subdivision will facilitate an expansion of uses supported within this designation.

G. **Code Criteria:** Section 19.12.03.1. states that all subdivisions are subject to the provisions of Chapter 19.13; Section 19.13.04 outlines the development process and submittal requirements, which have been reviewed in Section E of this report.

Section 19.12.06 outlines the general subdivision improvement requirements which are reviewed below. Section 19.04.23 outlines the OW zone requirements. Applicable requirements of these sections are reviewed below.

<u>19.12.06</u>
Section 19.12.06.1.c. requires the use of connecting streets, pedestrian walkways, trails and other methods for providing logical connections and linkages between neighborhoods. The proposed plat includes connecting streets and trails that will provide logical connections by extending Stagecoach Drive to the north, which will facilitate future development to the north of this property. There are no trails located on or within close proximity to this property; however, the sidewalks associated with the public street improvements will provide sufficient pedestrian connection.

Section 19.12.06.2.a. requires subdivisions to result in lots that are capable of being built upon. The 2 proposed lots are sufficient to facilitate viable office warehouse developments.

Section 19.12.06.2.b. requires all lots to have frontage on a street that meets City standards and requirements. The OW zone does not have a minimum lot frontage requirement; however, both lots do have frontage and access to public roads. Stagecoach Drive is will be extended as part of the required improvements with this subdivision.

Section 19.12.06.2.d. requires that land dedicated for public roads and rights of way may not be included in any lots. This subdivision does not require any additional land to be dedicated for public roads. The right-of-way for the northern portion of Stagecoach Drive has already been dedicated to the City; however, the physical improvements have not been installed.

<u>19.04.23</u>
Section 19.04.23.3. lists self-service storage units and automobile repair as a conditional uses in the OW zone. The Conditional Use permit for storage units was approved by the City Council on February 9, 2010. A separate application for automobile repair has been requested and will be reviewed in conjunction with the North Saratoga Center (Unique Auto Body) amended Site Plan.

Section 19.04.23.4 requires a minimum lot size of 40,000 square feet in the OW zone. Both lots exceed this minimum requirement.

Section 19.04.23.14 requires 20% open space for developments in the OW zone. Lot 1 contains 16,546 square feet of landscaping, which equals 22.98% open space. Lot 2 contains 1.5 acres of landscaping, which equals 31% open space. Please note that approximately 7,570 square feet of the open space on Lot 2 is within a detention basin, which is about 11.6% of the open space. The proposed subdivision meets the open space requirements for developments within the OW zone.

H. Recommendation and Alternatives:

Staff recommends that the City Council review the proposed Preliminary and Final Plat, conduct a public meeting, and choose one of the following motions:

"I move that the City Council approve of the North Saratoga Center Plat A Preliminary and Final Plats, located at approximately 2175 North Redwood Road, based on the findings and conditions listed below:

Findings:

1. The Preliminary and Final Plats are consistent with the General Plan as explained in the findings in Section "F" of this report, which findings are incorporated herein by this reference.
2. The Preliminary and Final Plats meet or can conditionally meet all the requirements in the Land Development Code as explained in the findings in Section "E" and "G" of this report, which findings are incorporated herein by this reference.

Conditions

1. That per Section 19.12.02(5) of the City Code, the Preliminary and Final Subdivision Plats shall remain valid for twenty-four months from the date of City Council approval. The City Council may grant extensions of time when such extensions will promote the public health, safety, and general welfare. Said extensions must be requested within twenty-four months of site plan/Subdivision approval and shall not exceed twelve months.
2. That all requirements of the City Engineer be met, including those listed in the attached report.
3. That all requirements of the City Fire Chief be met.
4. Any other conditions as articulated by the City Council:

_____

Alternative Motions:

Alternative Motion A

"I move to **continue** the item to another meeting, with direction to the applicant and Staff on information and / or changes needed to render a decision, as follows:

_____

_____

_____

Alternative Motion B

"Based upon the analysis discussed at the meeting and information received from the public, I move that the City Council deny the North Saratoga Center Plat A Preliminary and Final Plats, located at approximately 2175 North Redwood Road, based on the findings below: "

List findings for denial:

_____

_____

_____

I. Exhibits:

A. Engineering Staff Report

B. Location Map
C. Aerial Photo
D. Preliminary Plat
E. May 22, 2014 Planning Commission Minutes

City Council
Staff Report

Author: Jeremy D. Lapin, City Engineer
Subject: North Saratoga Center Plat A
Date: May 22, 2014
Type of Item: Preliminary / Final Plat

CITY OF
SARATOGA SPRINGS

Description:

A. Topic: The Applicant has submitted a Final Plat application. Staff has reviewed the submittal and provides the following recommendations.

B. Background:

Applicant:	*Cadence Capital, LLC / Ryan Bybee*
Request:	*Preliminary and Final Plat Approval*
Location:	*2148 North Stagecoach Drive*
Acreage:	*6.49 acres - 2 lots*

C. Recommendation: Staff recommends the approval of final plat subject to the following conditions:

D. Conditions:

A. The developer shall prepare final construction drawings as outlined in the City's standards and specifications and receive approval from the City Engineer on those drawings prior to commencing construction.

B. Meet all engineering conditions and requirements in the construction of the subdivision and recording of the plats. Review and inspection fees must be paid as indicated by the City prior to any construction being performed on the project.

C. All roads shall be designed and constructed to City standards and shall incorporate all geotechnical recommendations as per the applicable soils report.

D. Developer shall provide end of road and end of sidewalk signs per MUTCD at all applicable locations.

E. All review comments and redlines provided by the City Engineer are to be complied with and implemented into the Final plat and construction drawings.

F. Developer must secure water rights as required by the City Engineer, City Attorney, and development code.

G. Submit easements for all off-site utilities not located in the public right-of-way.

H. Developer is required to ensure that there are no adverse effects to future homeowners due to the grading practices employed during construction of these plats.

I. Project must meet the City Ordinance for Storm Water release (0.2 cfs/acre for all developed property) and all UPDES and NPDES project construction requirements.

J. Final plats and plans shall include an Erosion Control Plan that complies with all City, UPDES and NPDES storm water pollution prevention requirements.

K. All work to conform to the City of Saratoga Springs Standard Technical Specifications, most recent edition.

L. Project bonding must be completed as approved by the City Engineer prior to recordation of plats.

M. Developer may be required by the Saratoga Springs Fire Chief to perform fire flow tests prior to final plat approval and prior to the commencement of the warranty period.

N. Submittal of a Mylar and electronic version of the as-built drawings in AutoCAD format to the City Engineer is required prior acceptance of site improvements and the commencement of the warranty period.

O. All roads shall be designed and constructed to City standards and shall incorporate all geotechnical recommendations as per the applicable soils report.

P. All subdivision improvements will need to be completed and accepted by the City including utility laterals to each lot and the completion of Stagecoach Drive as per the City's Transportation Master Plan and Engineering standards prior to any lots receiving a building permit.

Q. Stagecoach drive shall include a fire code compliant turnaround within 150' of the north end.

R. Developer shall ensure turning radiuses are adequate for all emergency vehicles.

Zoning Map

Exhibit B

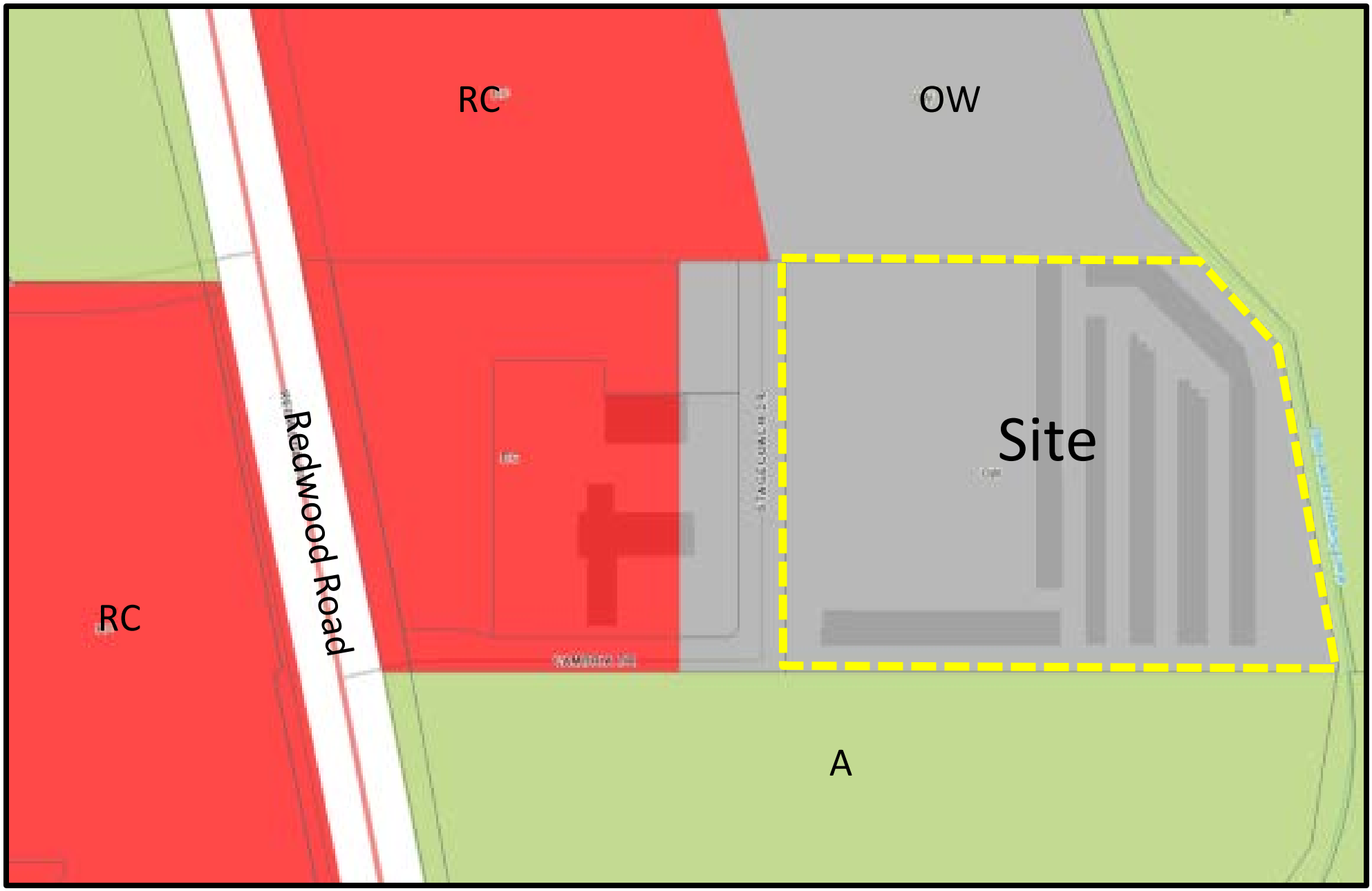

Aerial Photo

Exhibit C

NORTH SARATOGA CENTER PLAT 'A'

LOCATED IN THE NORTHWEST QUARTER OF SECTION 11,TOWNSHIP 5 SOUTH, RANGE 1 WEST,SALT LAKE BASE AND MERIDIAN SARATOGA SPRINGS CITY, UTAH COUNTY, UTAH

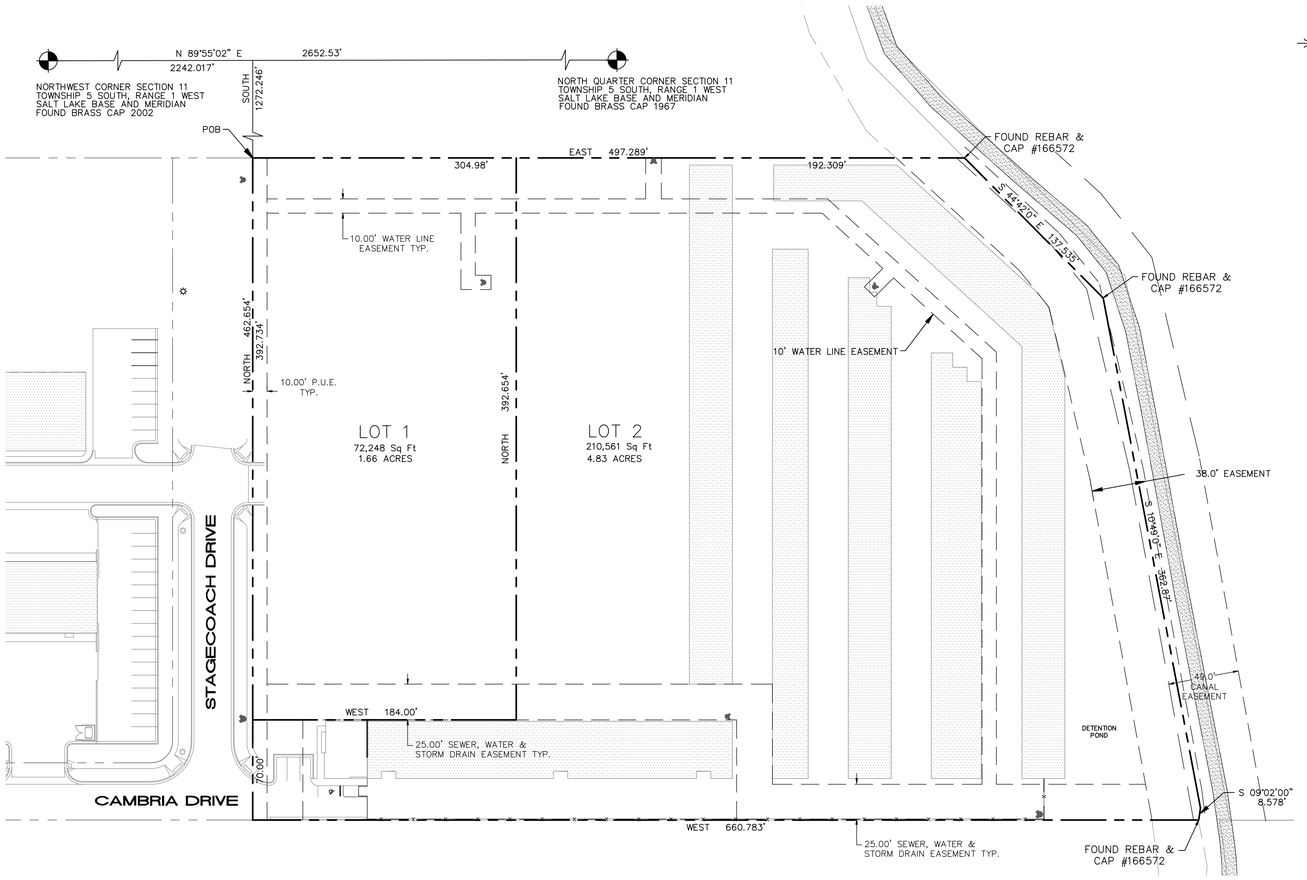

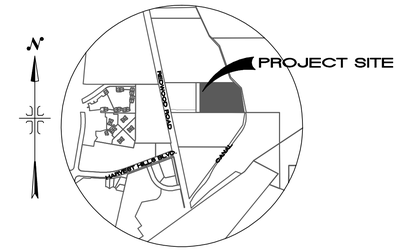

VICINITY MAP
NTS

NOTES:
1. PLAT MUST BE RECORDED WITHIN 24 MONTHS OF FINAL PLAT APPROVAL BY CITY COUNCIL. FINAL PLAT APPROVAL WAS GRANTED ON THE ___DAY OF _____20___.
2. THE INSTALLATION OF IMPROVEMENTS SHALL CONFORM TO ALL CITY RULES, ORDINANCES, REQUIREMENTS, STANDARDS AND POLICIES REGARDING THE DEVELOPMENT OF THIS PROPERTY
3. PRIOR TO BUILDING PERMITS BEING ISSUED, SOIL TESTING STUDIES MAY BE REQUIRED ON EACH LOT AS DETERMINED BY THE CITY BUILDING OFFICIAL.
4. PLAT MAY BE SUBJECT TO A MASTER DEVELOPMENT AGREEMENT, SUBDIVISION AGREEMENT, OR SITE PLAN AGREEMENT. SEE CITY RECORDER FOR MORE INFORMATION.
5. BUILDING PERMITS WILL NOT BE ISSUED UNTIL: ALL IMPROVEMENTS HAVE BEEN INSTALLED AND ACCEPTED BY THE CITY IN WRITING; ALL IMPROVEMENTS CURRENTLY MEET CITY STANDARDS; AND BONDS ARE POSTED BY THE CURRENT OWNER OF THE PROJECT PURSUANT TO CITY CODE.
6. ALL BONDS AND BOND AGREEMENTS ARE BETWEEN THE CITY, DEVELOPER/OWNER AND FINANCIAL INSTITUTION. NO OTHER PARTY, INCLUDING UNIT OR LOT OWNERS, SHALL BE DEEMED A THIRD-PARTY BENEFICIARY OR HAVE ANY RIGHTS INCLUDING THE RIGHT TO BRING ANY ACTION UNDER ANY BOND OR BOND AGREEMENT.
7. THE OWNER OF THIS SUBDIVISION AND ANY SUCCESSORS AND ASSIGNS ARE RESPONSIBLE FOR ENSURING THAT IMPACT AND CONNECTION FEES ARE PAID AND WATER RIGHTS SECURED FOR EACH INDIVIDUAL LOT. NO BUILDING PERMITS SHALL BE ISSUED FOR ANY LOT IN THIS SUBDIVISION UNTIL ALL IMPACT AND CONNECTION FEES, AT THE RATES IN EFFECT WHEN APPLYING FOR BUILDING PERMIT, ARE PAID IN FULL AND WATER RIGHTS SECURED AS SPECIFIED BY CURRENT CITY ORDINANCES AND FEE SCHEDULES.
8. ALL OPEN SPACE AND TRAIL IMPROVEMENTS LOCATED HEREIN ARE TO BE INSTALLED BY OWNER AND MAINTAINED BY HOMEOWNERS ASSOCIATION UNLESS SPECIFIED OTHERWISE ON EACH IMPROVEMENT.
9. ANY REFERENCE HEREIN TO OWNERS, DEVELOPERS, OR CONTRACTORS SHALL APPLY TO SUCCESSORS, AGENTS, AND ASSIGNS.
10. NO CITY MAINTENANCE IS PROVIDED ON PRIVATE STREETS.
11. LOTS/UNITS ARE SUBJECT TO ASSOCIATION BYLAWS, ARTICLES OF INCORPORATION AND CC&R'S.
12. ALL COMMON AREAS ARE DESIGNATED AS UTILITY EASEMENTS TO THE CITY OF SARATOGA SPRINGS AND PUBLIC UTILITY EASEMENTS, AND ARE DEDICATED TO THE HILLCREST HOME OWNERS ASSOCIATION.

LEGEND

- PROPERTY BOUNDARY LINE
- EASEMENT LINE
- FIRE HYDRANT
- STREET LIGHT
- SECTION CORNER MONUMENT
- EXISTING BUILDING

0 30 60 90

(24"x36")
SCALE: 1" = 30'
(11"x17")
SCALE: 1" = 60'

BY SIGNING THIS PLAT, THE FOLLOWING UTILITY COMPANIES ARE APPROVING THE: (A) BOUNDARY, COURSE, DIMENSIONS, AND INTENDED USE OF THE RIGHT-Of-WAY AND EASEMENT GRANTS OF RECORD, (B) LOCATION OF EXISTING UNDERGROUND AND UTILITY FACILITIES, (C) CONDITIONS OR RESTRICTIONS GOVERNING THE LOCATION OF THE FACILITIES WITHIN THE RIGHT-OF-WAY, AND EASEMENT GRANTS OF RECORD, AND UTILITY FACILITIES WITHIN THE SUBDIVISION. "APPROVING" SHALL HAVE THE MEANING IN UTAH CODE SECTION 10-9A-603(4)(c)(ii).

QUESTAR GAS COMPANY	ROCKY MOUNTAIN POWER
APPROVED THIS____DAY OF_____, A.D., 20____ QUESTAR GAS COMPANY	APPROVED THIS____DAY OF_____, A.D., 20____ ROCKY MOUNTAIN POWER
COMCAST CABLE TELEVISION	**QWEST**
APPROVED THIS____DAY OF_____, A.D., 20____ COMCAST CABLE TELEVISION	APPROVED THIS____DAY OF_____, A.D., 20____ QWEST

I, Travis Trane, do hereby certify that I am a Registered Land Surveyor, and that I hold Certificate No. 5152741, in accordance with the Professional Engineers and Land Surveyors Licensing Act found in Title 58, Chapter 22 of the Utah Code. I further certify that at the authority of the owners, I have made a survey of the tract of land shown on this plat and described below, have subdivided said tract of land into lots, streets, and easements, have completed a survey of the property described on this plat in accordance with Utah Code Section 17-23-17, have verified all measurements, and have placed monuments as represented on the plat. I further certify that every existing right-of-way and easement grant of record for underground facilities as defined in Utah Code Section 54-8a-2, and for other utility facilities, is accurately descried on this plat and that this plat is true and correct. I also certify that I have filed, or will file within 90 days of the recordation of this plat, a map of the survey I have completed with the Utah County Surveyor.

A parcel of land situated in the Southwest Quarter of Section 11, Township 5 South, Range 1 West, Salt Lake Base and Meridian, said parcel being more particularly described as follows:

Beginning at a point which is North 89°55'02 East 2242.017 feet along the Section line and South 1272.246 feet from the Northwest Corner of Section 11, Township 5 South, Range 1 West, Salt Lake Base and Meridian; thence East 497.289 feet to a rebar and cap #166572; thence South 44°42'00" East 137.535 feet to a rebar and Cap #166572; thence South 10°49'00" East 362.87 feet; thence South 09°02'00" West 8.578 feet to a rebar and cap #166572; thence West 660.783 feet; thence North 462.654 feet to the point of beginnig.

Parcel contains: 6.49 acres more or less

Subdivision contains: 2 LOTS

Basis of Bearing: North 89°55'02" East from the Northeast Corner of Section 11 to the North Quarter Corne of Section 11, Township 5 South, Range 1 West, Salt Lake Base and Meridian

DATE

SURVEYOR
(See Seal Below)

OWNER'S DEDICATION

Know all men by these presents that _____, the _____undersigned owner(s) of the above tract of land having caused the same to be subdivided into lots and streets to be hereafter known as

NORTH SARATOGA CENTER PLAT 'A'

do hereby dedicate for the perpetual use of the public and/or City all parcels of land, easements, right-of-way, and public amenities shown on this plat as intended for public and/or City use, The owner(s) voluntarily defend, indemnify, and save harmless the City against any easements or other encumbrance on a dedicated street which will interfere with the City's use, maintenance, and operation of the street. The owner(s) voluntarily defend, indemnify, and hold harmless the City's from any damage claimed by persons within or without this subdivision to have been caused by alterations of the ground surface, vegetation, drainage, or surface or sub-surface water flows within this subdivision or by establishment or construction of the roads within this subdivision.

In witness whereof ____ have hereunto set ____ this _____ day of _____ ,A.D. 20 ____

N. Paul Gifford, Manager of Solitude Construction LLC

ACKNOWLEDGEMENT (LLC)

STATE OF UTAH)
County of Salt Lake) S.S.

On the _____ day of _____ A.D. 20 _____ , personally appeared before me N. Paul Gifford, who being by me duly sworn did say for himself, that he is the Manager of Solitude Construction LLC, and that the within and foregoing instrument was signed in behalf of said LLC by authority of a resolution of its Members and N. Paul Gifford duly acknowledge to me that said LLC executed the same.

MY COMMISSION EXPIRES

NOTARY PUBLIC RESIDING AT

APPROVAL BY LEGISLATIVE BODY

The City Council of the City of Saratoga Springs, County of Utah, approves this subdivision subject to the conditions and restrictions stated hereon, and hereby accepts the Dedication of all streets, easements, and other parcels of land intended for the public purpose of the perpetual use of the public. This_____, day of_____,A.D. 20 ____

CITY MAYOR

Attest
City Recorder
(See Seal Below)

NORTH SARATOGA CENTER PLAT 'A'

LOCATED IN A PORTION OF THE NORTHWEST QUARTER OF SECTION 11, TOWNSHIP 5 SOUTH, RANGE 1 WEST, SALT LAKE BASE AND MERIDIAN SARATOGA SPRINGS CITY, UTAH COUNTY, UTAH

SHEET 1 OF 1

FLAGSHIP HOMES
170 SOUTH INTERSTATE PLAZA DR. SUITE 250
LEHI, UT 84043 (801) 768-4442

TRANE ENGINEERING, P.C.
CONSULTING ENGINEERS AND LAND SURVEYORS
27 EAST MAIN STREET LEHI, UTAH 84043 (801) 768-4544

AREA TABULATIONS

TOTAL BOUNDARY AREA: 47,884 SQ. FT. (1.10 ACRES)
LOT 2L LANDSCAPED AREA: 15,254 SQ. FT. (32%)

FIRE CHIEF APPROVAL	PLANNING COMMISSION APPROVAL	SARATOGA SPRINGS ENGINEER APPROVAL	SARATOGA SPRINGS ATTORNEY	LEHI CITY POST OFFICE
APPROVED BY THE FIRE CHIEF ON THIS DAY OF_____, A.D., 20_____	APPROVED BY THE PLANNING COMMISSION ON THIS DAY OF_____, A.D., 20_____	APPROVED BY THE CITY ENGINEER ON THIS DAY OF_____, A.D., 20_____	APPROVED BY SARATOGA SPRINGS ATTORNEY ON THIS DAY OF_____, A.D., 20 _____	APPROVED BY POST OFFICE REPRESENTATIVE ON THIS DAY OF_____, A.D., 20 _____
CITY FIRE CHIEF	CHAIRMAN, PLANNING COMMISSION	CITY ENGINEER	SARATOGA SPRINGS ATTORNEY	LEHI CITY POST OFFICE REPRESENTATIVE

SURVEYORS SEAL	NOTARY PUBLIC SEAL	CITY ENGINEER SEAL	CITY RECORDER SEAL

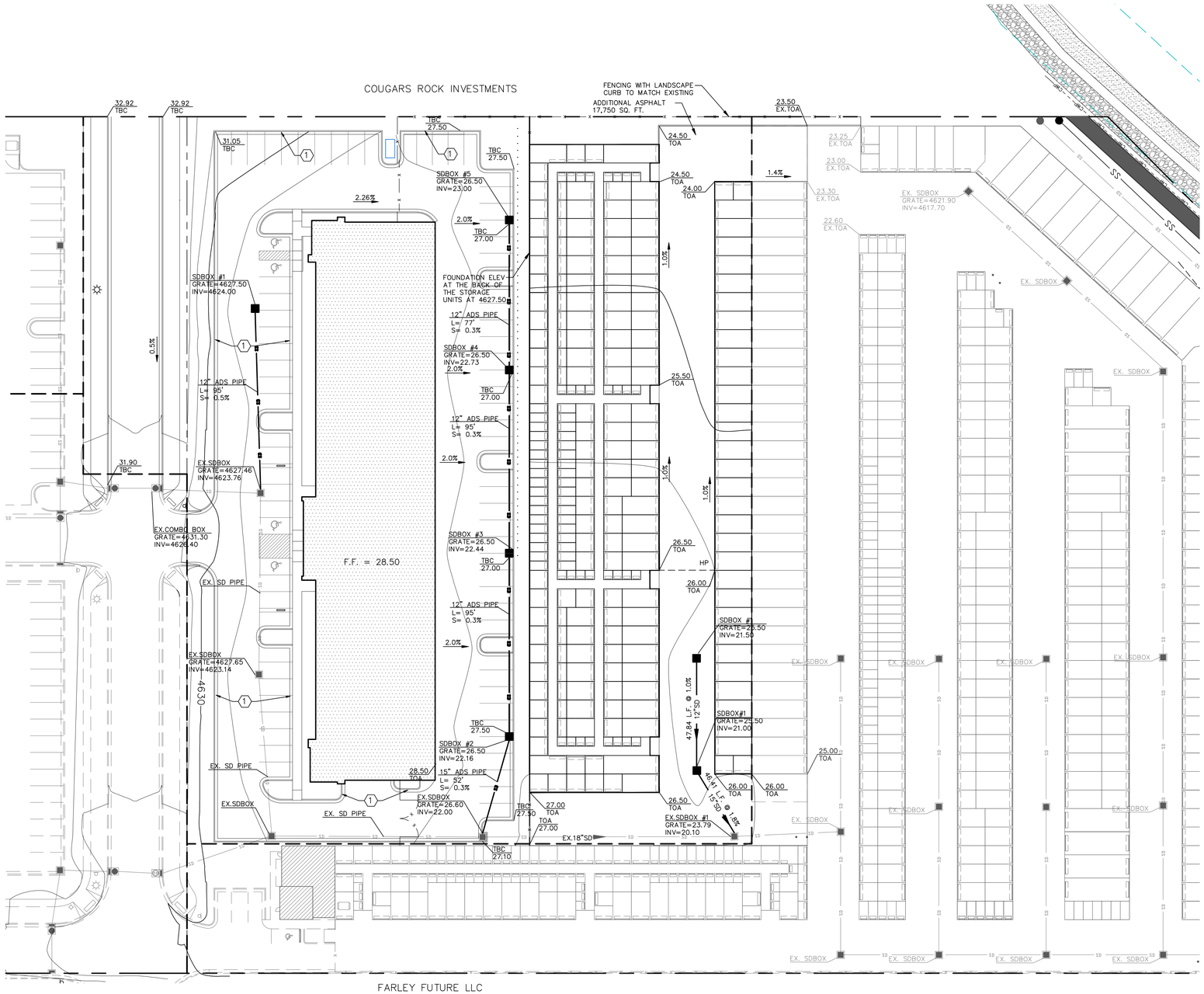

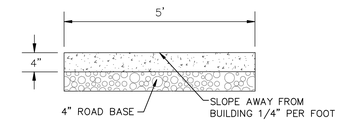

ONSITE SIDEWALK
-NTS-

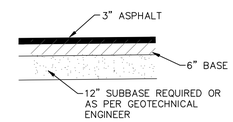

ONSITE ASPHALT SECTION
PARKING LOT
-NTS-

GENERAL NOTES

1. ALL CONSTRUCTION TO BE DONE ACCORDING TO SARATOGA SPRINGS CITY STANDARDS AND SPECIFICATIONS.
2. CURB AND GUTTER TO BE FALL OUT WHERE ASPHALT SLOPE IS AWAY FROM CURB. WHERE ASPHLAT SLOPES TOWARD CURB, USE AS STANDARD CURB (SEE DETAIL ST-2).
3. PERMANENT DETENTION FACILITIES TO BE OWNED AND MAINTAINED BY THE PROPERTY OWNERS AND ARE NOT TO BE ALTERED WITHOUT APPROVAL BY SARATOGA SPRINGS CITY COUNCIL AND CITY ENGINEER.
4. ALL STORM DRAIN BOXES TO BE 3'X3' INSIDE DIMENSION UNLESS OTHERWISE SPECIFIED
5. CONTRACTOR TO MEET ALL ADA REQUIREMENTS FOR THE SITE.
6. DETENTION CALCULATIONS WERE PROVIDED WITH THE ORIGINAL PLANSET AND THE DETENTION AREA WAS CONSTRUCTED WITH PHASE 2A WITH A DESIGNED CAPACITY OF 30,276 CUBIC FEET.

KEYED NOTES

1. FALLOUT CURB AS PER STANDARD DETAIL ST-2
2. CONST. ADA RAMP AS PER SARATOGA SPRINGS CITY STANDARDS
4. INSTALL STORMCEPTOR OIL WATER SEPERATOR BY RINKER OR EQUIVALANT (SEE DETAIL ON SHEET 11)

0 30 60 90

(24"x36")
SCALE: 1" = 30'
(11"x17")
SCALE: 1" = 60'

REVISIONS			
NO.	DATE	DESCRIPTION	BY
1	04/25/11	ADJUSTED STORAGE UNITS	TGT
2	05/20/13	ADDITIONAL STORAGE UNITS	TGT
3			
4			

J:\RYAN BYBEE\SARATOGA SPRINGS\1B-2B AMENDED 2013\GRADING.dwg

DESIGNED BY:	TGT
DRAWN BY:	TT
CHECK BY:	TGT
DATE:	05/09/14
CDGD FILE:	

TRANE ENGINEERING, P.C.
CONSULTING ENGINEERS AND LAND SURVEYORS
170 SOUTH INTERSTATE PLAZA DRIVE SUITE 230 LEHI, UTAH 84043 (801) 768-4544

SARATOGA SPRINGS, UTAH

NORTH SARATOGA CENTER
PHASE 2B AMENDED 2014

GRADING AND DRAINAGE

JOB R.BYBEE

SHEET NO. 4 OF 10

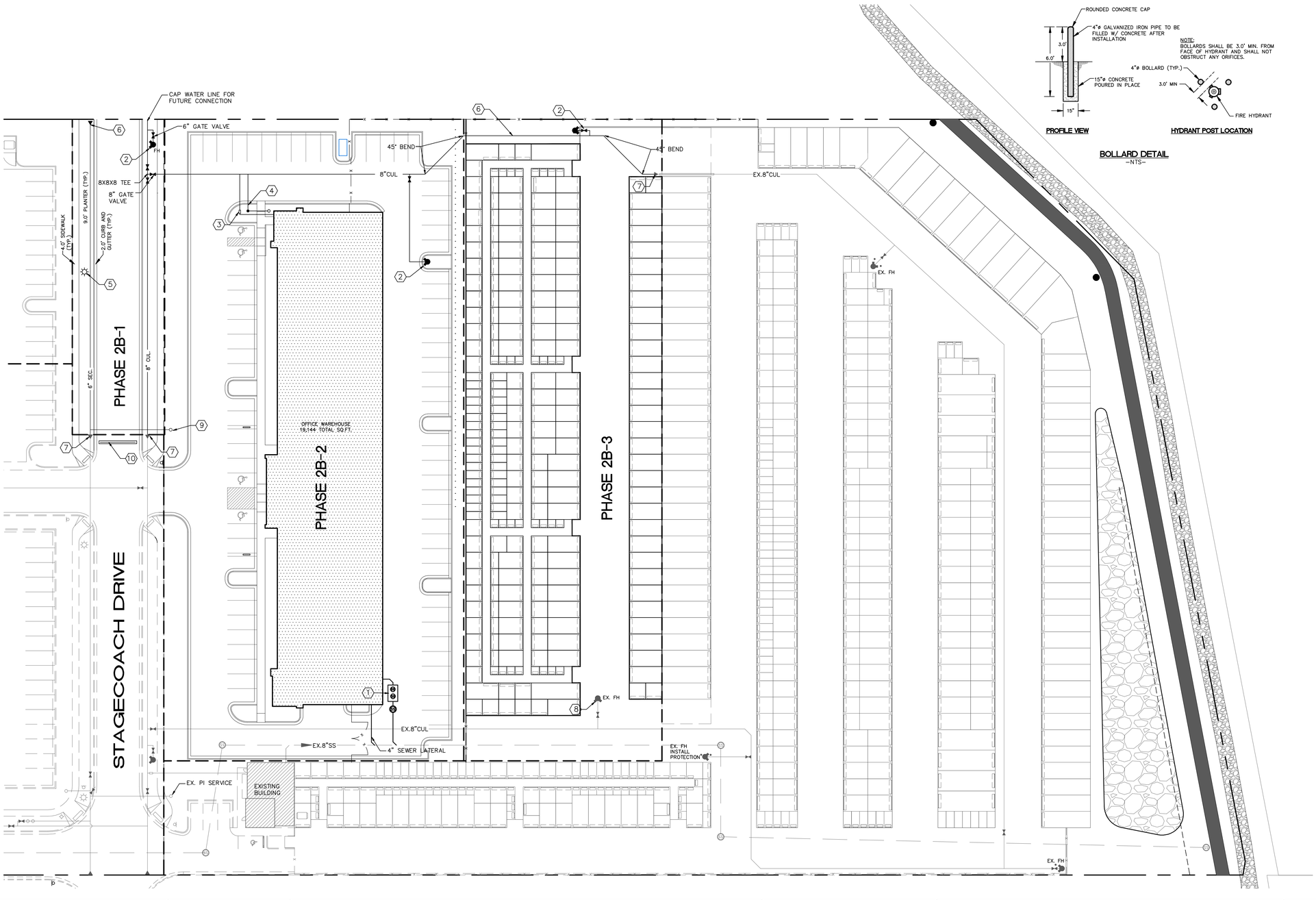

BOLLARD DETAIL
–NTS–

PHASING NOTES

PHASE 2B-1 INCLUDES ALL IMPROVEMENTS IN STAGE COACH DRIVE AND ANY CITY OWNED AND MAINTAINED IMPROVEMENTS ARE TO BE INSTALLED WITH PHASE 2B-1

PHASE 2B-2 INCLUDES ALL IMPROVEMENTS WITHIN THE BOUNDARY OF THE OFFICE WAREHOUSE AS SHOWN BY THE PHASE LINE

PHASE 2B-3 INCLUDES ALL IMPROVEMENTS WITHIN THE BOUNDARY OF THE EXPANSION OF THE STORAGE UNITS.

KEYED NOTES

1. GREASE TRAP AND SAMPLING MANHOLE CONSTRUCTED AS PER SARATOGA SPRINGS CITY STANDARDS
2. INSTALL FIRE HYDRANT AS PER SARATOGA SPRINGS CITY STANDARD NO. WT-4.
3. INSTALL 1" WATER METER AS PER SARATOGA SPRINGS CITY STANDARD
4. INSTALL 6" FIRE LINE
5. INSTALL 20' COMMERCIAL STREET LIGHT AS PER SARATOGA SPRINGS CITY STANDARD
6. INSTALL BLOW-OFF ON 6" SECONDARY WATER LINE
7. REMOVE TEMPORARY BLOW OFF
8. REMOVE EXISTING FIRE HYDRANT TO MAIN AND CAP
9. INSTALL 1" PI LATERAL WITH METER TO SERVICE OFFICE WAREHOUSE (PHASE 2B-2)
10. INSTALL BARRIERS AND ROAD CLOSED SIGN UNTIL STAGE COACH DRIVE IS EXTENDED TO THE NORTH.

UTILITY NOTES

1. ALL CONSTRUCTION TO BE DONE ACCORDING TO SARATOGA SPRINGS CITY STANDARDS AND SPECIFICATIONS. (MOST RECENT EDITION).
2. CURB AND GUTTER TO BE A REVERSE LIP WHERE ASPHALT SLOPE IS AWAY FROM CURB. WHERE ASPHLAT SLOPES TOWARD CURB, USE AS STANDARD CURB (SEE DETAILS)
3. PERMANENT DETENTION FACILITIES TO BE OWNED AND MAINTAINED BY THE PROPERTY OWNERS AND ARE NOT TO BE ALTERED WITHOUT APPROVAL BY SARATOGA SPRINGS CITY COUNCIL AND CITY ENGINEER.
4. CONTRACTOR TO MEET ALL ADA REQUIREMENTS FOR THE SITE.
5. WATER TEES, ELBOWS AND TRENCHES SHALL BE INSTALLED AS PER SARATOGA SPRINGS CITY STANDARD WT-1 AND PIPE BEDDING AS PER SARATOGA SPRINGS CITY STANDARD WT-2

0 30 60 90

(24"x36")
SCALE: 1" = 30'
(11"x17")
SCALE: 1" = 60'

REVISIONS			
NO.	DATE	DESCRIPTION	BY
1	04/25/11	ADJUSTED STORAGE UNITS	TGT
2	05/20/13	ADDITIONAL STORAGE UNITS	TGT
3			
4			

DESIGNED BY:	TGT
DRAWN BY:	TT
CHECK BY:	TGT
DATE:	05/09/14
COGO FILE:	

J:\RYAN BYBEE\SARATOGA SPRINGS\dwg\1B-2B AMENDED 2013\UTILITY.dwg

TRANE ENGINEERING, P.C.
CONSULTING ENGINEERS AND LAND SURVEYORS
27 EAST MAIN STREET LEHI, UTAH 84043 (801) 768-4544

SARATOGA SPRINGS, UTAH

NORTH SARATOGA CENTER
PHASE 2B AMENDED 2014

UTILITY PLAN

JOB R.BYBEE

SHEET NO. 3 OF 10

City of Saratoga Springs
Planning Commission Meeting
May 22, 2014
Regular Session held at the City of Saratoga Springs City Offices
1307 North Commerce Drive, Suite 200, Saratoga Springs, Utah 84045

Draft Planning Commission Minutes

Present:
Commission Members: Jeff, Cochran, Jarred Henline, Kirk Wilkins, Sandra Steele, Eric Reese, Hayden Williamson
Staff: Lori Yates, Sarah Carroll, Nicolette Fike, Scott Langford
Others: James Jones, Mike Helmantoler, Aric Jensen, Tami Buckland, Chris Raver, Joe Hitzeman, Cornell Brown, Joel Darby, Satt Jenson, Miranda Jensen, Ryan Bybee, Arnold Hansen, Paul Watson, Jeff Nielsen, Jeremy Weller, Jim Wherler, Jennifer Hansen, Steve Sowby
Excused: Kara North

Call to Order - 6:36 p.m. by Eric Reese, Vice Chairman
Pledge of Allegiance - led by Hayden Williamson
Roll Call - Quorum was present

Input was called for from the Commission, no comments were given at this time.

Public Input Open by Eric Reese

Michael Helmantoler -, wanted to know who was responsible for upkeep on the area on the north side of Jordan Ridge Blvd. which is currently full of weeds. Also, on Riverbend, are there plans for water access? Sarah Carroll – replied that Jordan Ridge Development was responsible, and no there are not plans for water access. She would speak with him later on his questions outside of meeting.

Meeting turned over to Commission Chair Jeff Cochran.
Public Input Closed by Jeff Cochran

4. Public Hearing: Preliminary Plat for Lake Cove located at 3168 South Spinnaker Drive, Ron Johnston, applicant.
CONTINUED TO JUNE 12, 2014 PLANNING COMMISSION MEETING.

5. Public Hearing: Preliminary Plat for Hillcrest Condominiums Phase 3 located at 1900 North Crest Road, Nate Hutchinson, Flagship Homes, applicant.
CONTINUED TO JUNE 12, 2014 PLANNING COMMISSION MEETING.

6. Public Hearing: Site Plan and Conditional Use for Platinum Car Wash located at 1413 N West Commerce Drive, Gary Hadfield, applicant.
CONTINUED TO JUNE 12, 2014 PLANNING COMMISSION MEETING.

Motion by Sandra Steel to continue the Public Hearing: Preliminary Plat for Lake Cove located at 3168 South Spinnaker Drive, And Preliminary Plat for Hillcrest Condominiums Phase 3 located at 1900 North Crest, And the Site Plan and Conditional Use for Platinum Car Wash located at 1413 N West Commerce Drive, to the meeting of June 12, 2014. Second by Kirk Wilkins. Aye: Sandra Steele, Hayden Williamson, Kirk Wilkins, Jarred Henline, Eric Reese and Jeff Cochran. Motion passed unanimously.

7. Public Hearing: Master Development Agreement Extension and Revision for the Riverbend development located at approximately 900 North Redwood Road, Knowlton General, applicant.

Sarah Carroll – presented the item. Applicants are requesting to renew and extend and modify the existing MDA. Applicant would like to request the same road layout to utilize existing lines and to continue the same road widths as already started. Staff recommends they keep basketball half court, 5 areas with concrete pad and picnic table 16'x20' pavilion and one medium size playground. She made note of the wetland area and what would be needed to comply to build there. She reviewed Staff findings and conditions. And recommended adding a condition related to the amenities.

Aric Jensen, for applicant – they are pleased with what staff has presented and are willing to move forward quickly when approved.

Public Input Open by Jeff Cochran

Cornell Brown, HOA president for Riverbend – noted that in these developments the amenities seem to get lost in the modifications of the plats. Parking with the smaller streets is becoming a problem and safety issue. Kids are playing in the streets because parks have not been developed yet. Breaking up into smaller lots is advantageous for them.

Tami Buckland – Parking has become a significant issue, with the size of the units, many units have multiple cars (passed a picture of parking to commission) and not enough parking. Emergency vehicles cannot access units and it's unsafe for children. She has witnessed accidents almost happening because of vehicles parked in odd places. She recommends adding several more parking spaces in the new plan. The park they currently have was paid for by HOA and not developer. It's not designed for older children, but they use it and it gets destroyed.
Sarah Carroll – on Riverside drive it is a public road and city does not recommend any stalls that back on to it. Staff did recommend amenities for the new phase.

Jennifer Hansen – has a problem with one medium size park in the proposed amenities for children with that large of an age gap. She feels it is important to have a tot lot. What they have is not enough for the little children, the bigger kids are taking over and it's a dangerous condition. The park is also in horrible repair. And she also agrees they need more parking.

Joe Hitzeman – also feels there is not enough parking, people parking in field and out of stalls. He also mentioned unsafe conditions for kids with them playing in the street because of no amenities for them to use. Feels he was promised things when he moved in and nothing has been built yet.

Arnold Hansen – echo's what others have said about amenities and parking. He would like the developer to make more curb appeal on Redwood Road. He feels the complex is nice but entrance doesn't reflect well on development or city.

Chris River – seconds what everyone else has said. Parking has been a huge problem, it's a safety hazard for kids in street, and parking in muddy field.

Public Input Closed by Jeff Cochran

Sandra Steele – has no problems with setbacks as long as driveways are a minimum of 20ft. She has issues with leaving the road the way the project started out, she feels a modified curb would work better and is concerned about undulation of driveways.
Jeff Cochran – said it would be difficult to put a high back curb and gutter in with this space.

Scott Langford – showed the new plan was a modified curb and gutter. Their intent is to continue the existing cross section.
Sarah Carroll – indicated they could have the developer change the detail.
Sandra Steele – is concerned about the parking, she would ask the developer if they could please add more parking and disperse it throughout development. Asked on garage size –
Aric Jensen - said old phase is one stall and new phase is two.
Sandra Steele - asked about engineer's requests being met, specifically with roads and turn-arounds meeting all standards. (Item 6 in engineer report.)
Staff and Developer - replied that the design today meets what engineer has asked.
Sarah Carroll – indicated that it would be fair to add that sentence, that the existing cross-section could be continued.
Sandra Steele – agreed that amenities were a must. She would leave it up to staff to work with developer as to what kind of playground is required.

Hayden Williamson – asked which phase Riverside drive would be installed
Sarah Carroll – answered that it would be all three phases, they all have portions.
Hayden Williamson – in doing that in all 3 phases will it still meet fire code requirements?
Sarah Carroll – replied that it would be reviewed with each plat as they would need to provide turn-arounds.
Hayden Williamson – feels that adding a condition concerning this issue of Riverside drive would be good. Feels developer should sit down with residences to see what they need and bring it back to the city for review.

Eric Reese – encourages adding parking where possible and having HOA work with developer on amenities. He feels curb appeal will be addressed and that it should look nice coming into the development.

Kirk Wilkins – directed questions to staff on the option of city if the MDA application expires.
Sarah Carroll – if MDA expires they don't have a way to continue similar setbacks and any new plan would have to meet current city codes.
Kirk Wilkins – said the setbacks weren't a concern. He doesn't have problems with road extension. Would echo comments earlier on amenities that developer work with city and create amenities that will help solve problems. Question on why the roads were 2' narrower as noted in the packet.
Sarah Carroll – explained that recently the City Council adopted new road cross sections that are 2 feet wider. If they increase current plat to current code then they can't have 20' drives.
Kirk Wilkins – question on the unit in the flood plain, if the wetland is replaced where would it be?
Sarah Carroll – replied that the developer would have to come up with a plan to replace it and if it can't be done then the developer would not be able to build lots in that area in later phases.
Scott Langford – they may have an option to buy areas outside at a ratio of 7 to 1 that is expensive and a long process.

Jarred Henline – does see the concerns with parking and amenities but this is really a review for an extension and sees the issues coming up later at preliminary plat. He is not sure how to put those conditions in without being specific. He asked why 7 years on the extension? He feels it should be shorter.
Sarah Carroll – something in code about the time allowed, 7-10 years but you could approve a shorter time frame.
Jarred Henline – he does understand the residences concerns and feels there are options to work out with developer, but our focus today is if we are going to continue this extension or not and for how long and then perhaps other problems like park and parking may come after that.

Jeff Cochran – thanked public for their comments. The Master Development Agreement is in place for 7 years and things change, if we give them a long time it may not be consistent with current city standards. He concurs with Mr. Henline. He asked for clarification on item in the report about utility placements currently laid out in future roads and if they really needed to be moved.

Sarah Carroll – if they didn't move them it would fall under driveways or things like that. The city engineer prefers they are in right of ways.
Jeff Cochran – feels they could meet the new standards and keep utilities in roadways. He asked developer to address that.
Aric Jensen – they did a layout that took into account all current standards. When they did that the utilities were falling under drive pads and things like that. They filed a variance application with new layout. At that time Kimber did not prefer asking for the variance and asked them to come with MDA extension instead.
Jeff Cochran – are there conditions they could put on MDA?
Sarah Carroll – we are giving up something by extending setbacks; things are given to them so we can ask for things from them. It would have to be run by the City Attorney.
Aric Jensen – does not disagree with what neighbors have said. He is new to the firm, has identified places they can add some parking stalls. With the wetland issues they are aware of them and the process they would need to go through. In terms of landscaping out front they have already contacted their landscaper to work on it. He feels they can address all the issues brought forward and doesn't have a problem going to City Council with these conditions.

Jeff Cochran – reviewed thoughts from council on the roadway being completed early, amenities and working with neighborhood HOA, roadway widths and keeping them the same.
Sandra Steele – is concerned with length of time for extension. When they grant extensions how long do they let MDA's go? Do we continue to give extensions and then things will never get up to city standard.
Eric Reese – suggested adding playground issue, language to allow HOA to suggest something.
Kirk Wilkins – perhaps add ratios concerning parking.
Hayden Williamson – concerned with adding ratios, but we could put something in to address additional parking.
Jarred Henline – should we table this and have the City Attorney look at it first and have developer bring it up to our standards first before we send it on to city council. He is not comfortable with suggesting items on parking or amenities and come up with good wording on the fly. We shouldn't give up something without getting what we want. He doesn't think legally we could come up with a good solution tonight.
Hayden Williamson – if we tabled this could we hear it before it expires in June?
Scott Langford - indicated that the City Council will get a copy of the planning recommendations and it would be hard to continue it longer with deadlines. We could tighten it with developer before we go to City Council.
Sandra Steele - could we extend it for a few months to be able to continue more discussions?
Sarah Carroll – we have extended other MDA's while they worked on revising it. If they decide to table or continue it they could still take it to City Council to get a short extension while they work it out.
Aric Jensen – said when we have a fixed date the contract expires on that date. If the City Council takes action on it to extend it than they are comfortable that the Council has taken action but contract law in the state is pretty explicit, if it is tabled and no action is taken then their contract will run out. His concern is that if it's tabled and council doesn't hear it and take action then they are back to variance process. He is good with Commission adding all the recommendations to take to Council.

Motion by Hayden Williamson to forward a positive recommendation to the City Council for the Riverbend MDA extension and modification with Findings and Conditions found in the staff report with language added that the developer work with the city and current residents to address concerns regarding parking, to address concerns regarding amenities, and to work with the city with concerns regarding the timing for Riverside drive. Seconded by Eric Reese.

Jeff Cochran – asked a question on the motion - would Mr. Williamson consider that applicant also work with city staff to consider putting the current roadway width in.
Hayden Williamson – he would not, he is in favor of keeping the roadway consistent with the project.

Aye: Sandra Steele, Hayden Williamson, Eric Reese, Kirk Wilkins. Nay: Jarred Henline and Jeff Cochran.

8. Concept Plan for Sierra Estates Senior Housing located at 350 West 400 North, Ross Welch, applicant.

Sarah Carroll – presented the plan and reviewed staff recommendations.

Steve Sowby, for Applicant – appreciated the opportunity to come back with improved plan. They have implemented all suggestions previously given by commission. They ask for approval tonight and agree with all staff recommendations.

Sandra Steele – for van accessible spot for employee parking, suggests applicant make sure access space is on passenger side. She asked previously that they comply with state statutes and that the statutes changed this past April.

Hayden Williamson - likes the new plan and parking.

Eric Reese – likes the plan.

Kirk Wilkins – looks like they have done everything asked, good job.

Jarred Henline – thinks it looks good.

Jeff Cochran – indicated his thanks for listening to the commission and coming back with improved plan.

9. Public Hearing: Preliminary Plat for North Saratoga Center Plat A located at 2175 North Stagecoach Drive, Ryan Bybee, applicant.
10. Public Hearing: Site Plan and Conditional Use permit for Unique Autobody located at 2175 North Stagecoach Drive, Andrew Bollschweiler, applicant.

Jeff Cochran asked that we listen to items 9. and 10. Together and hear public comment together for them.

Scott Langford – presented the items.

9. Applicant has applied for preliminary and final plat approval as it goes to City Council. This is the only office/warehouse zone in the city.
10. Showed overlays and touched on unique needs of business. Applicant raised a question of dumpster location, they feel best spot would be enclosed within building and have planned for that. As you approve site plan it includes signage, that won't be a separate item. No additional signage is requested for storage unit.

Ryan Bybee, Applicant – one comment on road for fire access, they had discussion about road extension of Stage Coach Blvd. that would be developed in future, he suggested for access that perhaps building it now would be a better option than making a temporary turn-around.

Public Input Opened by Jeff Cochran
No public input at this time.
Public Input Closed by Jeff Cochran

Jarred Henline – he is good with item 9. On 10, if they change their minds on the garbage cans and decide they need more what would happen.
Scott Langford – they would have to comply with code and provide enclosure for that.

Jarred Henline – on the sign, they need to pick one of the options.

Kirk Wilkins – wanted to know what style of fence on west side.
Scott Langford – applicant has submitted plan for 6' rod iron style.
Kirk Wilkins –has a concern that cars would be parked there that could be seen from main road.
James Jones, Architect – the building is larger to have cars parked inside, so they should not be parked outside at all.
Kirk Wilkins – expressed concern with trash inside and possibly containing bio hazards and other potential hazards.
Scott Langford – this is a conditional use permit; Commission could put an additional condition to make sure cars were not stored in NW portion of lot.
Kirk Wilkins – would like to add a condition that no broken down cars are parked along North and West side. Also pick one of the sign options.

Eric Reese – doesn't have any concerns, but wanted more detail on improving road for fire access.
Ryan Bybee – showed where it was on the overlay and the problems with a temporary turn.
James Jones – said the road is already dedicated so they have talked with staff to see what was needed to get it in this year.
Eric Reese – would support condition of no cars being worked on stored outside. Would let applicant do what they have planned with dumpsters.

Hayden Williamson – likes the look of it. He would support condition of no cars on NW sides.
Jeremy Weller – said no cars would be out front and exposed, adding there are no doors on front of building.

Sandra Steele – concern with parking, there are 4 spaces provided for storage units, is there an onsite manager?
Scott Langford – yes there is an onsite manager and they do live there. Manager indicated that parking was never an issue. Extra cars usually park on Stagecoach or further in near units.
Sandra Steele – thinks there should be separate parking for manager and that there should be a Van Accessible space that meets standards in width. She suggested a condition about if additional garbage containers would be needed that they install surrounds as in code.

Jeff Cochran – reviewed comments for item 9. Handicap parking spot. Item 10. Condition that no parking on N. and W. side and discussion on signs and discussion on trash container
Sandra Steele – feels more parking should be added for item 9.
Jarred Henline – also feels more parking would be good.
Ryan Bybee – noted that there is space inside the facility for manager to park if he needs to use it.

Motion by Jarred Henline to recommend approval to the City Council of the North Saratoga Center Plat A Preliminary Plat, located at approximately 2175 North Redwood Road, based on the findings and conditions in the report and add two additional conditions that they come into compliance with statutory code regarding handicap parking, and maybe meet in the middle that during business hours no employee can park in customer spaces. Second by Sandra Steele. Aye: Sandra Steele, Kirk Wilkins, Jarred Henline, Eric Reese and Jeff Cochran. Nay: Hayden Williamson.

> Hayden Williamson – voted nay because he is uncomfortable with attaching stipulations regarding existing parking based on approval to add more units. They know their business better than we do. He feels it's not the proper role of government to force them to have adequate customer parking. The handicap one does have a little weight with him but tends to go with the spirit of the law on that.

Motion (withdrawn) by Jarred Henline that Based upon the evidence and explanations received today, (I move) that the Planning Commission forward a positive recommendation to the City Council to approve the

Amended Site Plan for the North Saratoga Center Office Warehouse Development (Phase 2B) on property located at approximately 2148 North Stagecoach Drive, with the findings and conditions found in the report and also an added condition that cars on the property to be serviced should be parked within the structure and not on the outside. Second by Kirk Wilkins

Hayden Williamson – understood on the stipulation on parking, that cars being serviced would be allowed to be parked on the east side.
Scott Langford – commented that it might be better to tie that condition to the use plan, not on the site plan.
Jarred Henline - Motion withdrawn without objection.

Motion by Jarred Henline: Based upon the evidence and explanations received today, I move that the Planning Commission forward a positive recommendation to the City Council to approve the Amended Site Plan for the North Saratoga Center Office Warehouse Development (Phase 2B) on property located at approximately 2148 North Stagecoach Drive, with the findings and conditions in the report. Second by Eric Reese. Aye: Sandra Steele, Kirk Wilkins, Eric Reese, Jarred Henline and Jeff Cochran, Hayden Williamson. Motion passed unanimously.

Jeff Cochran – notes items discussed for use plan of cars not on North or West, signage to choose one, and trash containers.

Motion by Jarred Henline Based upon the evidence and explanations received today, I move that the Planning Commission forward a positive recommendation to the City Council to approve a Conditional Use Permit to allow "Automotive Repair, major" on the west 1.66 acres of property located within the North Saratoga Center Office Warehouse development (Phase 2B), located at approximately 2148 North Stagecoach Drive, with the findings and conditions found in the report and added conditions being that cars on the property being serviced should be parked within the structure or on the East side only, and that they may only have one sign not two. Second by Eric Reese.

Hayden Williamson – on the parking would Mr. Henline be willing to substitute to say "cars cannot be parked outside of the fenced area," because they have 5 stalls on the North side of the building that are behind fenced area and it would be protected by fence?
Jarred Henline – answered no, he is good the way it was stated.

Aye: Sandra Steele, Kirk Wilkins, Jarred Henline and Jeff Cochran, Eric Reese, Hayden Williamson. Motion passed unanimously.

11. Public Hearing: Rezone and Concept Plan for Beacon Point located 4400 South 100 West, Paul Watson, applicant.

Scott Langford – presented this item and staff findings and recommendations. There are some questions on culinary and secondary water in the area and fire protection zone. Applicant would be required to submit a fire protection plan and assurance that homes would be protected. Chief Campbell indicated an additional study would need to be made.

Paul Watson, Applicant – they will work out issues with water with staff; they know where the problems are and feel it will be ok. They agree with staff recommendations. They would not like to bring collector all the way down to Redwood Road. UDOT is ok with the accesses.

Public Input Open by Jeff Cochran

Scott Jensen – water pressure is definitely a concern. Also with retention ponds, there is an existing ditch that helps prevent flooding, will that be maintained?
Scott Langford – said in phase one they will be diverting water into retention ponds.
Paul Watson – with 100 flood plain two basins are needed, and they are putting them in phase one.
Scott Jensen – with added access will Redwood Road be adding lanes, as in a turn lane?
Scott Langford – they would be required to improve the frontage.
Scott Jensen – wanted to make sure lot sizes were consistent with current neighborhood.
Scott Langford – replied the average lot size was around 10,000 ft.

Miranda Jensen – worried about traffic coming in during first phase through the existing neighborhood because of the traffic currently there. There are children playing in the street and would there be construction access.
Jeff Cochran – construction access is required that are not through the neighborhood.
Miranda Jensen – wanted to know if all new traffic for residences was going to be routed through current roads.
Scott Langford - they would use existing roads for phase one and then phase two would complete the access to Redwood Road.

Public Input Closed by Jeff Cochran
Jarred Henline – access on open space, some of it is steep hill?
Scott Langford - yes they will need to specify sensitive land on the plat, only 50% is allowed by code for open space.
Jarred Henline – asked Paul to address water issues.
Paul Watson – later phases will bring new pipelines and they feel it will have sufficient pressure. They will make sure existing homes have pressure
Scott Langford - staff leaning towards rezone being conditioned upon preliminary plat approval, and those issues being resolved.

Kirk Wilkins – asked about the elevation difference between some lots and once the detention basin is full and water follows little river, he is concerned the houses would be impacted.
Paul Watson– reviewed different elevations, and said the channel is about 12 feet wide and 8' deep. Models have been done and engineering, it's sized to handle the drainage.
Kirk Wilkins – would suggest that there isn't a rezone without conditions. He agrees corner lots need to be increased in size to meet code. He is still concerned with water pressure.

Eric Reese – likes the trail system and would echo what others have said about the MDA.

Hayden Williamson – also concerned about 3 lots backing on to collectors especially about the one close to Redwood Road.
Paul Watson – we could put a restriction on plat that forces a turn on the driveway.
Hayden Williamson – Concerned about fire access during phase1 before phase with main access is built. Could temporary emergency access be put in place?
Paul Watson – replied that he would have to work it out with UDOT.
Hayden Williamson – he would like to see that added as a note. He would like to see approval based upon recording of preliminary plat.

Sandra Steele – this is the last R2 in the city. She is concerned with fire issue and defensible area, and upkeep of defensible area. She is concerned with water pressure issues. She doesn't like 60 lots in phase 1 all driving through the current neighborhood. She feels it's too premature to come to commission tonight and would not support a rezone now.

Jeff Cochran – is struggling with the R4 zone, thinks R3 may be more acceptable within the city. He is a little concerned with the collector road. He thinks water issues could be worked out in time.
Paul Linford– pointed out that 100 ft. south the area is zoned between R10 and R20 and feels the R4 zone would help with that transition from this area to that.

Jarred Henline – feels added traffic in existing neighborhood for phase 1 might be too much.
Eric Reese – asked staff if the traffic was a valid concern?
Scott Langford – referred to engineers report and his expertise.
Hayden Williamson – on a condition to tie into Redwood road, would we make it a condition of rezone or on a condition for final plat approval.
Scott Langford – thought it would benefit everyone best if it was articulated it in a condition.

Motion made by Hayden Williamson, Based upon the evidence and explanations received today, I move that the Planning Commission forward a positive recommendation to the City Council to approve the rezoning of approximately 63.64 acres of property as shown in Exhibit 2 and generally located at 4300 South Redwood Road from the R-2 to the R-4 zone, with the findings and conditions listed in the staff report, with the additional conditions that rezone does not happen until "final" plat is recorded, and that collector road to Redwood Road is included in phase one. Second by Eric Reese.

Eric Reese – a MDA had been talked about?
Scott Langford – that would be the third option in staff report, condition in report for this motion is that it doesn't take effect until preliminary plat. That is so there is some entitlement at that point and developer could post bonds and start construction.
Jeff Cochran – believes the question is would Mr. Williamson accept the MDA option?
Hayden Williamson – his goal was to make sure that the city is able to determine the final product and not just rezoning it.
Scott Langford - recommends second option listed in staff report on option 2, conditions on page 6.
Hayden Williamson – does not accept MDA as part of his motion.

Nay: Sandra Steele, Kirk Wilkins, Jarred Henline and Jeff Cochran, Eric Reese, Hayden Williamson. Motion **failed** unanimously.

Motion was made by Hayden Williamson that: Based upon the evidence and explanations received today, I move that the Planning Commission forward a positive recommendation to the City Council to approve the rezone of approximately 63.64 acres of property as shown in Exhibit 2 and generally located at 4300 South Redwood Road from the R-2 to the R-4 zone, with the findings and conditions listed below in the staff report, specifically pointing out That the rezone shall take effect after the Applicant obtains Preliminary Plat approval. And the Preliminary Plat shall be substantially consistent with the attached Concept Plan. And that the primary access to Redwood Road be connected in phase one. Second by Eric Reese Aye: Kirk Wilkins, Hayden Williamson, Eric Reese. Nays: Sandra Steele, Jarred Henline, Jeff Cochran .

At 9:25p.m. a break was taken by Commission.
Meeting resumed at 9:31p.m.

12. Revision to the City of Saratoga Springs Land Development Code. (Section 19.05—Temporary Uses).
Continued discussion from May 08, 2014 Planning Commission, possible recommendation.

Scott Langford – reviewed the revision and discussion at last meeting. Revisions included removal of the parking requirement for all TUP's, replace with a requirement for approval of business within 300'. Added garbage standards. Creation of a separate section for mobile food vendors and incorporating additional clarifying standards such as duration and separation from residential areas. Prohibitions on operation as a

drive-through, prohibiting in park strips, and other standards. Reduction of the bond requirements to $250 on private property and $500 on public property, and creating an allowance for an annual bond for mobile food vendors.

Jarred Henline – numbering on pages 7 and 8 needs to be fixed. In paragraph 3a on page 8 says it has to be hosted by brick and mortar business, he would add that maybe they could be at a park "or in a public place, permission by the city." He feels the bond is still high but likes that they can choose a yearly option.
Eric Reese – what exempts a kid going out to the curb, like a lemonade stand.
Scott Langford – indicated most codes they had looked at were silent about the issue.
Hayden Williamson – thought they had discussed some wording about if on a private property it would be exempt.
Jarred Henline – recalled the discussion that they just didn't apply with this code, there is nothing that prevents them from doing so with this code.
Hayden Williamson – he thought they had talked about on the bond requirement that if they were in good standing that they could have that reduced.
Jeff Cochran – likes Commissioner Henline's thought that they have to be hosted by brick and mortar or a public place in the city.
Sandra Steele – doesn't think the city would allow it at any other time than civic events.
Hayden Williamson - if required to be hosted by brick and mortar only then why have a public property bond?
Sandra Steele - believes that fee would be for civic event times to clean up the park.
Hayden Williamson – the problem with requiring only brick and mortar business to invite or host the vendors is that it doesn't make sense for civic events like the splash?
Sandra Steele – then thinks there should be some phrasing that they would be allowed to go to public places during city events.
Jarred Henline – doesn't think the city should say to not do something (like allowing vendors at a public location) when the residences wanted it. Should let free market reign
Jeff Cochran – currently how it is written they cannot go to park, or public place for any event.
Kirk Wilkins – he has heard people say our city is hard to do business with, too many restrictions. He feels we should make changes to make it easier to deal with. Make easier restrictions.
Hayden Williamson – on second item 3b, he can see situation where they could be there longer than 8 hours and suggests allowing them to be here longer.
Jarred Henline – would agree to that.
Sandra Steele – noted that at another meeting it was set up for 12 hours a day, and others said no, only 8 hours. We need to move forward with this tonight, because there are other items waiting on this down the pipeline.

Motion by Jarred Henline to forward a positive recommendation to the City Council for the proposed amendments to Section 19.05 with the Findings and Conditions found in the report: with the added conditions: no. 1, that numbering from the two subparagraph 3's be corrected; That subparagraph 3a on page 8 be changed to also include (A mobile food vendor shall be permitted only when hosted by an existing brick-and-mortar business) "or upon public property with permission from the city." ; 3b, mobile food vendors shall not be parked for more than 8 hours a day in any location without first being given express permission from the city; And paragraph 10, the bond paragraph be changed to that after 6 months of good behavior the bond be reduced by half for those vendors who have been found to be in compliance to code. Second Hayden Williamson. Aye: Sandra Steele, Kirk Wilkins, Jarred Henline and Jeff Cochran, Eric Reese, Hayden Williamson. Motion passed unanimously.

13. Approval of Reports of Action

2 reports to act on

Riverbend and Temporary uses.

Scott confirmed recommendations.

Motion by Hayden to approve report of action on Master Development Agreement and Revision for the Riverbend development located at approximately 900 North and Redwood. Second by Sandra Steele. Aye: Sandra Steele, Kirk Wilkins, Jarred Henline and Jeff Cochran, Eric Reese, Hayden Williamson. Motion passed unanimously.

Motion by Hayden Williamson to approve the plan of action for the revisions to the City of Saratoga Springs Land Development Code, section 19.05 Temporary Uses. Second by Kirk Wilkins. Aye: Sandra Steele, Kirk Wilkins, Jarred Henline and Jeff Cochran, Eric Reese, Hayden Williamson. Motion passed unanimously.

14. Approval of Minutes:

1. March 13, 2014.

Motion by Eric Reese to approve minutes from March 13, 2014. Second by Kirk Williams. Aye: Sandra Steele, Kirk Wilkins, Jarred Henline and Jeff Cochran, Eric Reese, Hayden Williamson. Motion passed unanimously.

15. Commission Comments – no comments given at this time

16. Director's Report

Scott Langford – indicated that the next meeting will be a full agenda. Reported on items that had been forwarded to City Council.

Meeting adjourned by Jeff Cochran

Adjourn 10:05 pm

CITY OF SARATOGA SPRINGS

City Council
Staff Report

North Saratoga Center Phase 2B (Unique Autobody)
Amended Site Plan, Sign Permit, and Conditional Use Permit
June 17, 2014
Public Meeting

Report Date:	June 10, 2014
Project Request / Type	Amended Site Plan & Conditional Use Permit
Applicant:	Andrew Bollschweiler
Location:	2148 North Stagecoach Drive
Major Street Access:	Redwood Road
Parcel Number(s) and size:	58:023:0210, 6.49 acres (actual site area 1.65 acres)
General Plan Designation:	Office Warehouse
Zone:	Office Warehouse (OW)
Adjacent Zoning:	OW (east & south), MU (north), and RC (west)
Current Use:	Vacant
Adjacent Uses:	Extra Space Storage (south & east), Car Dr. & Saratoga Auto Parts (West), Vacant (north)
Previous Meetings:	Concept Plan: PC 03-13-14, CC 04-01-14; Amended Site Plan, Sign Permit, and CUP: PC 05-22-14
Land Use Authority:	City Council
Future Routing:	n/a
Planner:	Scott Langford, Senior Planner

A. Executive Summary:

This is a request for an approval of an Amended Site Plan for the North Saratoga Center office warehouse development (Phase 2B) and a Conditional Use Permit (CUP) to allow for automobile repair. The amended Site Plan will facilitate the expansion of the existing self-storage units as well as provided additional site plan refinement to support a specific auto body repair facility. The site is located at 2148 North Stagecoach Drive. The site is comprised of a single existing parcel totaling 6.49 acres; however, the City is currently reviewing an application that will subdivide the property into 2 lots. The area for Phase 2B (the area being amended is 2.75 acres).

Recommendation:

Staff recommends that the City Council conduct a public meeting and at their discretion discuss the proposed Amended Site Plan and CUP, and choose from the options in Section "H" of this report. Options include a motion for approval as conditioned in this report, a motion for approval as contingent other conditions of approval, a motion for approval continuance to gather additional supportive information, or a motion for a denial based

Scott Langford, AICP, Senior Planner
1307 North Commerce Drive, Suite 200 • Saratoga Springs, Utah 84045
slangford@saratogaspringscity.com • 801-766-9793 x116 • 801-766-9794 fax

on non-compliance with findings of specific criterion. *Please note that a separate motion for the Amended Site Plan and CUP is required.*

B. Background:

This property is part of the North Saratoga Center Office Warehouse and Storage Units, which was originally approved by the City Council September 2004. Through a series of updates and amendments the most recent approval was granted June 21, 2011. A portion of this commercial and office warehouse development has been built.

The currently approved North Saratoga Center Office Warehouse Site Plan is divided in four phases; 1A and 2A include the commercial frontage along Redwood Road, and 1B and 2B include office warehouses and self-storage units. The Planning Commission reviewed the current Concept Plan on March 13, 2014. The majority of the Planning Commission agreed that the City's current parking requirements were too high and they recommended continued review of all parking standards. The commissioners thought that the proposed use fit in well with the existing auto oriented businesses.

C. Specific Request:

The City has received an application that proposes an amendment to Phase 2B of the North Saratoga Office Warehouse development. This site plan amendment expands the existing self-storage use into the east portion of Phase 2B that previously was approved for an office warehouse. The amended site plan shows 241 new storage units on top of the existing 567 storage units.

The other component of the site plan amendment focuses on the west half of Phase 2B, which is being refined to reflect the specific use (Unique Auto Body) that will be developing this site. The Planning Commission and City Council have both reviewed the Concept Plan for Unique Auto Body and was in general support of the proposed use. Associated with Unique Auto Body is the CUP application to allow for automobile repair.

D. Process:

Site Plan

Section 19.13.04 of the City Code states that Site Plans require City Council approval after the Planning Commission holds a public hearing and forwards a recommendation. The City Code also requires that the Urban Design Committee (UDC) review non-residential developments. The UDC reviewed the amended site plan on May 5, 2014. The UDC made the following recommendations:

1. Provide details for all fencing and gates
2. Is the single dumpster enclosure (in the building) sufficient for this type of business?
3. They were concerned about the potential weathering of the office warehouse front building façade because of the cantilevered window treatments on the west side of the building.
4. The new storage units should match in color and material to the existing storage units.
5. The building signage must meet the code requirements.

Conditional Use Permit

Section 19.15 of the City states that Conditional Use Permits (CUP's) require City Council approval after the Planning Commission holds a public hearing and forwards a recommendation. A CUP is required to allow for major automobile repair in the OW zone.

The Planning Commission held a public hearing regarding these applications on May 22, 2014. After discussion the proposed site plan amendment and the associated conditional use permit, the Planning Commission voted 6-0 in favor of the both applications, with the associated conditions of approval.

E. Community Review:

Per 19.13.04 of the City Code, this item (Site Plan and CUP) was noticed in *The Daily Herald*, and each residential property within 300 feet of the subject property was sent a letter at least ten calendar days prior to the Planning Commission hearing. As of the completion of this report, the only public comment regarding this application came from the property owner to the south. He only had general questions and was not concerned with the proposed site plan amendment or the proposed auto body shop.

F. General Plan:

The site is designated as Office Warehouse on the adopted Future Land Use Map. The amended site plan and CUP will facilitate development that meets the purpose and intent of the Office Warehouse land use designation and development that is harmonious with the existing development in the area.

G. Code Criteria:

Site Plan

The following criteria are pertinent requirements for site plans listed in Sections 19.14 (Site Plan Requirements) and 19.04.23 (OW Requirements) of the City Code.

Permitted or Conditional Uses: can comply. Section 19.04.23(2 & 3) lists all of the permitted and conditional uses allowed in the OW zone. The west half of Phase 2B proposes a use that is defined as "Automobile repair (Major)". This is a conditional use allowed in the OW zone. The applicant will have to receive approval of a conditional use permit in conjunction with this amended site plan approval in order to operate an automobile repair facility.

Minimum Lot Sizes: complies. 19.04.23(5) states that the minimum size for developments for this zone is 40,000 square feet (0.918 acres). The 2.75 acre Phase 2B is part of a much larger office warehouse development. The applicant has also applied for a subdivision plat (North Saratoga Center Plat A) that includes both Phases 2B and 1B. The proposed subdivision will create 2 lots; Lot 1 will be 1.66 acres and Lot 2 will be 4.83 acres. Both lots will comply with this code requirement.

Setbacks and Yard Requirements: complies. Section 19.04.23(6) outlines the setbacks required by the OW zone. These requirements are:

> **Front:** Not less than fifty feet.
>
> **Sides:** 50 feet when adjacent to a residential zone / zero when adjacent to commercial, industrial, or agriculture zones
>
> **Rear:** 50 feet when adjacent to a residential zone / zero when adjacent to commercial, industrial, or agriculture zones
>
> **Other General Requirements:** In addition to the specific setback requirements noted above, no building shall be closer than five feet from any private road, driveway, or parking space. The intent of this requirement is to provide for building foundation landscaping and to provide protection to the building. Exceptions may be made for any part of the building that may contain an approved drive-up window.

The proposed office warehouse building and proposed storage units are in compliance with these standards.

Parking, vehicle and pedestrian circulation: complies. Section 19.09.11 requires specific numbers of parking stalls based on specific land use. The following table is a breakdown of the specific uses proposed within the office warehouse building and the associated parking required per Section 19.09.11 of the City Code.

Use	Square Feet	Code Requirement	Stalls Required
Office	3,283	5/1,000 (1/200)	16.42
Auto Repair	2,204	5/1,000 (1/200)	22.04
Carwash	12,490	5/1,000 (1/200)	62.45
Auto Sales & Service	3,297	5/1,000 (1/200)	16.48
			Total: 117.39 (118)

The applicant has provided a floor plan that shows 40 parking stalls within the building and 79 parking stall located around the building for a total of 119 parking stalls. This clarifying information helps address the parking concerns discussed during the Concept Plan review.

In terms of parking requirements associated with the self-storage units, the code states that the parking requirements are to be determined by the Planning Commission. There are three existing parking spaces located at the entrance of the storage facility. Staff does not believe that additional parking is needed with the proposed expansion. The Planning Commission also believes that the provided parking is sufficient for the proposed uses.

Maximum Height of Structures: complies. Section 19.04.23(7) limits the height of structures to 35 feet. The building elevations indicate that the main height of the office warehouse building will be 28 feet, with architectural roof elements reaching a total height of 30 feet. The proposed storage building will match the height of the existing units, which is approximately 14 feet.

Lot Coverage: complies. Section 19.04.23(8) limits the building coverage to 50% of the developed site. The building footprint of the office warehouse building is 21,275 square feet. The size of the site is approximately 71,874 square feet. Therefore the building coverage is approximately 30% for the west portion of Phase 2B. The overall building coverage for the storage unit development changes from a current coverage of 32.3% to 36% coverage.

Minimum Lot Width: complies. Section 19.04.23(9) requires a minimum lot width of 70 feet. The width of the Proposed Lot 1 is 391.27 feet and the other lot width is 462.65 feet.

Development Standards: can comply. Section 19.04.23(10a) states that the Urban Design Committee (UDC) shall review the Site Plan and building elevations. The UDC reviewed the amended site plan. The UDC's recommendations are found in Section "D" of this report.

Section 19.04.23(10b) requires a minimum 15 foot landscape buffer between the parking area and the public street. Section 19.09.08 requires a minimum 8 foot wide landscaped strip where a parking area abuts a property line which is not zoned residential or agriculture. In both cases, the amended site plan complies with these requirements.

Section 19.04.23(10c) states that site landscaping shall be in accordance with the applicable sections of the City Code.

The office warehouse site plan provides 14,729 square feet of landscaping (20.46% of the site). Based on the City Code, the site must provide the following quantities of landscape material:

Deciduous Trees		Evergreen Trees		Shrubs		% of Turf	
Required	*Provided*	*Required*	*Provided*	*Required*	*Provided*	*Required*	*Provided*
±7	21	±6	11	±19	59 (132)	50%	53.31%

The storage unit portion of the site plan is only landscaped near the west entrance, where it is visible. The City Council has the authority to adjust the landscaping standards as circumstances dictate (Section 19.06.07[3]). Staff recommends that the City Council exercise their authority and not require any additional landscaping on Lot 2, which is the area designated for the storage unit expansion. Additional landscaping within the storage units would not be visible from outside the development and could become a maintenance and safety burden.

Uses Within Buildings: complies. Section 19.04.23(11) requires all uses within the OW zone to be conducted within a fully enclosed building. The amended site plan complies with this requirement.

Trash Storage: can comply. Section 19.04.23(12) requires onsite trash storage locations in an enclosed/screened structure. The site plan for the office warehouse shows a dumpster enclosure within the building. The UDC questioned whether one dumpster for this type of business would be adequate. The Planning Commission discussed this and they believe that code enforcement can handle this if it becomes an issue in the future.

Buffering/Screening Requirements: not applicable. Section 19.04.23(13) requires walls, fencing, or landscaping of acceptable design to screen the boarders of any commercial or industrial lot which abuts an agricultural or residential use. There are no such uses that boarder this site. That said, the site plan for the office warehouse shows that the rear portion of the site will be fenced. This fence is shown on the plans as a 6 foot tall wrought iron style black aluminum security fence.

Open Space Requirements: complies. Section 19.04.23.14 requires 20% open space for developments in the OW zone. Lot 1 contains 14,729 square feet of landscaping, which equals 20.46% open space. Lot 2 contains 1.5 acres of landscaping, which equals 31% open space. Overall the amended site plan meets the open space requirements for developments within the OW zone.

Considerations Relating to Outdoor Advertising: can comply. 19.18 of the City Code provides sign regulations. The building elevation for the office warehouse building shows two wall mounted signs – both on the west elevation.

Sign #1: 19′6″x 7′ = 136.5 square feet

Sign #2: 14′ x 5′ = 70 square feet

Based on Section 19.18.08(3) of the Code, the 21,468 square foot office warehouse building is only allowed to have one wall mounted sign per elevation. The office warehouse building is 301.42 feet long; therefore the maximum sign area is 301.42 square feet. However, the code also limits the height of letters/graphics to four feet maximum. Based on the code height limit, the applicant could either reduce the size of the sign or remove the oval shown behind the name of the business.

Conditional Use Permit:
Section 19.15.03(2) states, *"The Planning Commission shall review each application and make a recommendation to approve, approve with conditions, or deny the application, or the Planning Commission may defer action if an applicant fails to appear at the public hearing or meeting or there is insufficient application information provided."* Section 19.15.05(4) of the City Code states, *"The conditional use shall meet the following standards:"* Please note that this section is only in reference to the proposed use of an automobile repair facility located on the west portion of North Saratoga Office Warehouse Development Phase 2B.

Standard 1: *"The use will not, under the circumstances of the particular case, be detrimental to the health, safety, or general welfare of persons residing or working in the vicinity, or injurious to property or improvements in the vicinity";*

Discussion: There is already an automotive repair facility located directly to the west of this site. To the east and south are self-service storage units.

Finding: The proposed automotive repair facility will not be detrimental to the health, safety, or general welfare of persons residing or working in the vicinity, or injurious to property or improvements in the vicinity.

Standard 2: ***"****The use will be consistent with the intent of the land use ordinance and comply with the regulations and conditions specified in the land use ordinance for such use";*

Discussion: Per the City Code, the proposed automotive repair facility meets the intent of the OW zone. It appears that all the regulations specified in the City Code for the automotive repair facility are being met.

Finding: The use will be consistent with the intent of the land use ordinance and comply with the regulations and conditions specified in the land use ordinance for such use.

Standard 3: *"The use will be consistent with the character and purposes stated for the land use zone involved and with the adopted Land Use Element of the General Plan";*

Discussion: Per the City Code, the proposed automotive repair facility meets the intent of the Office Warehouse land use designation. The proposed automotive repair facility is a good example of a home occupation that is compatible with the general character of a commercial development and the OW zoning district.

Finding: The use will be consistent with the character and purposes stated for the land use zone involved and with the adopted Land Use Element of the General Plan.

Standard 4: *"The use will not result in a situation which is cost ineffective, administratively infeasible, or unduly difficult to provide essential services by the City, including roads and access for emergency vehicles and residents, fire protection, police protection, schools and busing, water, sewer, storm drainage, and garbage removal";*

Discussion: The proposed automotive repair facility will not require any increase in public services that are not typical of the existing commercial development. Appropriate impact fees associated with this development will mitigate any impact to the public services.

Finding: The automotive repair facility will not result in a situation which is contrary to the impacts listed in this standard.

Standard 5: *"The proposed use will conform to the intent of the City of Saratoga Springs General Plan."*

Discussion: The General Plan designates this area for the development of Office Warehouse type uses. It has been determined through adopted ordinance that automotive repair facilities are a conditionally permitted use and have been approved in the immediate vicinity within this development.

Finding: The proposed use will conform to the intent of the City of Saratoga Springs General Plan.

H. Recommendations and Alternatives:

After evaluating the required standards for commercial site plans located in an OW zone, staff recommends that the City Council conduct a public meeting and choose one of the following motions:

Amended Site Plan

"Based upon the evidence and explanations received today, I move that the City Council approve the Amended Site Plan for the North Saratoga Center office warehouse development (Phase 2B) on property located at approximately 2148 North Stagecoach Drive, with the findings and conditions below:

Findings:

1. The Amended Site Plan is consistent with the General Plan as explained in the findings in Section "F" of this report, which findings are incorporated herein by this reference.
2. The Amended Site Plan meets or can conditionally meet all the requirements in the Land Development Code as explained in the findings in Section "E" and "G" of this report, which findings are incorporated herein by this reference.

Conditions:

1. That per Section 19.14.09 of the City Code, if no substantial construction has occurred in a development which has been granted Site Plan approval pursuant to this Chapter within twenty-four months from the date of approval, the Planning Director shall revoke the Site Plan approval.
2. The North Saratoga Center Plat A shall be approved prior to the issuance of any building permits on the subject property.
3. Per Section 19.18.08(3.e) the building elevations and sign plan shall be updated to only show one sign on the west building elevation. Said wall sign shall meet all of the requirements of the City Code.
4. Per Section 19.06.07(3) the City Council shall not require any additional landscaping on Lot 2 (storage unit site).
5. All requirements of the City Engineer shall be met, including but not limited to those in the attached report.
6. All requirements of the Fire Chief shall be met, including but not limited to those in the attached report.
7. Any other conditions as articulated by the City Council: _____

_____

_____

_____

Alternative Motions:

Alternative Motion A

"I move to **continue** the item to another meeting, with direction to the applicant and Staff on information and/or changes needed to render a decision, as follows:

_____

_____

_____

_____

Alternative Motion B

"Based upon the evidence and explanations received today and the following findings, I move that the City Council deny the Amended Site Plan for the North Saratoga Center office warehouse development (Phase 2B) on property located at approximately 2148 North Stagecoach Drive. Specifically I find that the following standards and/or code requirements have not been met:"

List Specific Code Standards and Requirements:

_____
_____
_____
_____

Conditional Use Permit

"Based upon the evidence and explanations received today, I move that the City Council approve a Conditional Use Permit to allow "Automotive Repair, major" on the west 1.66 acres of property located within the North Saratoga Center Office Warehouse development (Phase 2B), located at approximately 2148 North Stagecoach Drive, with the findings and conditions below:

Findings:

1. Granting a Conditional Use Permit to allow "automotive repair, major" as defined in the land development code at this location is consistent with the General Plan as explained in the findings in Section "F" of this report, which findings are incorporated herein by this reference.
2. Granting a Conditional Use Permit to allow "automotive repair, major" as defined in the land development code at this location meets or can conditionally meet all the requirements in the Land Development Code as explained in the findings in Section "E" and "G" of this report, which findings are incorporated herein by this reference.

Conditions:

1. All requirements of the City Engineer shall be met, including but not limited to those in the attached report.
2. All requirements of the Fire Chief shall be met, including but not limited to those in the attached report.
3. That no cars being worked on shall be parked outside on the west and north sides of the building.
4. Any other conditions as articulated by the City Council: _____
   _____
   _____
   _____

Alternative Motions:

Alternative Motion A

"I move to **continue** the item to another meeting, with direction to the applicant and Staff on information and/or changes needed to render a decision, as follows:

_____
_____
_____
_____

Alternative Motion B

"Based upon the evidence and explanations received today and the following findings, I move that the City Council deny a Conditional Use Permit to allow "Automotive Repair, major" on the west 1.66 acres of property located within the North Saratoga Center Office Warehouse development (Phase 2B), located at approximately 2148 North Stagecoach Drive. Specifically I find that the following standards and/or code requirements have not been met:"

List Specific Code Standards and Requirements:

I. Exhibits:

1. Engineering Report
2. Zoning / Location map
3. Aerial Photo
4. Amended Site Plan Exhibits
5. May 22, 2014 Planning Commission Minutes

City Council
Staff Report

Author: Jeremy D. Lapin, City Engineer
Subject: Unique Auto Body
Date: May 22, 2014
Type of Item: Amended Site Plan and Conditional Use Permit

Description:

A. Topic: The applicant has submitted a concept plan application. Staff has reviewed the submittal and provides the following recommendations.

B. Background:

Applicant:	*Andrew Bollschweiler*
Request:	*Amended Site Plan and Conditional Use Permit*
Location:	*2148 Stagecoach Drive*
Acreage:	*21,275 sf or 0.49 acres – 1 proposed building*

C. Recommendation: Staff recommends the applicant address and incorporate the following items for consideration into the development of their project and construction drawings.

D. Proposed Items for Consideration:

A. Meet all engineering conditions and requirements in the construction of the project. Review and inspection fees must be paid and a bond posted as per the City's Development Code prior to any construction being performed on the project. Impact and water fees are due when pulling the building permit.

B. Project bonding must be completed as approved by the City Engineer prior to recordation of plats.

C. All work to conform to the City of Saratoga Springs Standard Technical Specifications, most recent edition.

D. All review comments and redlines provided by the City Engineer are to be complied with and implemented with the approved construction drawings.

E. Developer must secure water rights as required by the City Engineer, City Attorney, and development code.

F. Developer shall prepare and record easements to the City for all public utilities

not located in the public right-of-way.

G. A subdivision plat will need to be recorded creating this lot prior to receiving approved construction drawings or a building permit. All lots shall meet the minimum lot requirements for the current zone. All subdivision improvements will need to be completed and accepted by the City including utility laterals to each lot and the completion of Stagecoach Drive as per the City's Transportation Master Plan and Engineering standards prior to receiving a building permit.

H. Prepare complete construction drawings as outlined in the City's standards and specifications and receive approval from the City Engineer on those drawings prior to commencing construction or receiving a building permit.

I. Consider and accommodate existing utilities, drainage systems, detention systems, and water storage systems into the project design. Access to existing facilities shall be maintained throughout the project.

J. Developer is required to ensure that there are no adverse effects to adjacent property owners due to the grading and construction practices employed during construction of this project.

K. Project must meet the City Ordinance for Storm Water release (0.2 cfs/acre for all developed property) and all UPDES and NPDES project construction requirements. Storm water must be treated to remove 80% of TSS and all hydrocarbons and floatables prior to discharge into the City system.

L. Lighting fixtures and lighting intensities shall meet the lighting requirements found in the Land Development Code and Engineering Standards and Specifications, most recent editions. All parking stalls shall have a minimum illumination of 0.5 ft-candles. Lighting shall have a color of no greater than 4,000 K.

M. Provide adequate and safe pedestrian access from Stagecoach Drive to the Site and building.

N. Identify all existing utilities and laterals on and adjacent to site. Any unused utility laterals shall be removed to the main and capped. Identify all utility relocations that will be required and coordinate with the appropriate utility companies.

O. Contractor must obtain an NOI from the state prior to commencing construction.

P. Submittal of a Mylar and electronic version of the as-built in AutoCAD format to the City Engineer is required prior to acceptance of site improvements and the commencement of the warranty period.

Q. Developer may be required by the Saratoga Springs Fire Chief to perform fire flow

test prior to final approval and prior to the commencement of the warranty period.

R. Stagecoach drive shall include a fire code compliant turnaround within 150’ of the north end.

Zoning Map

Exhibit B

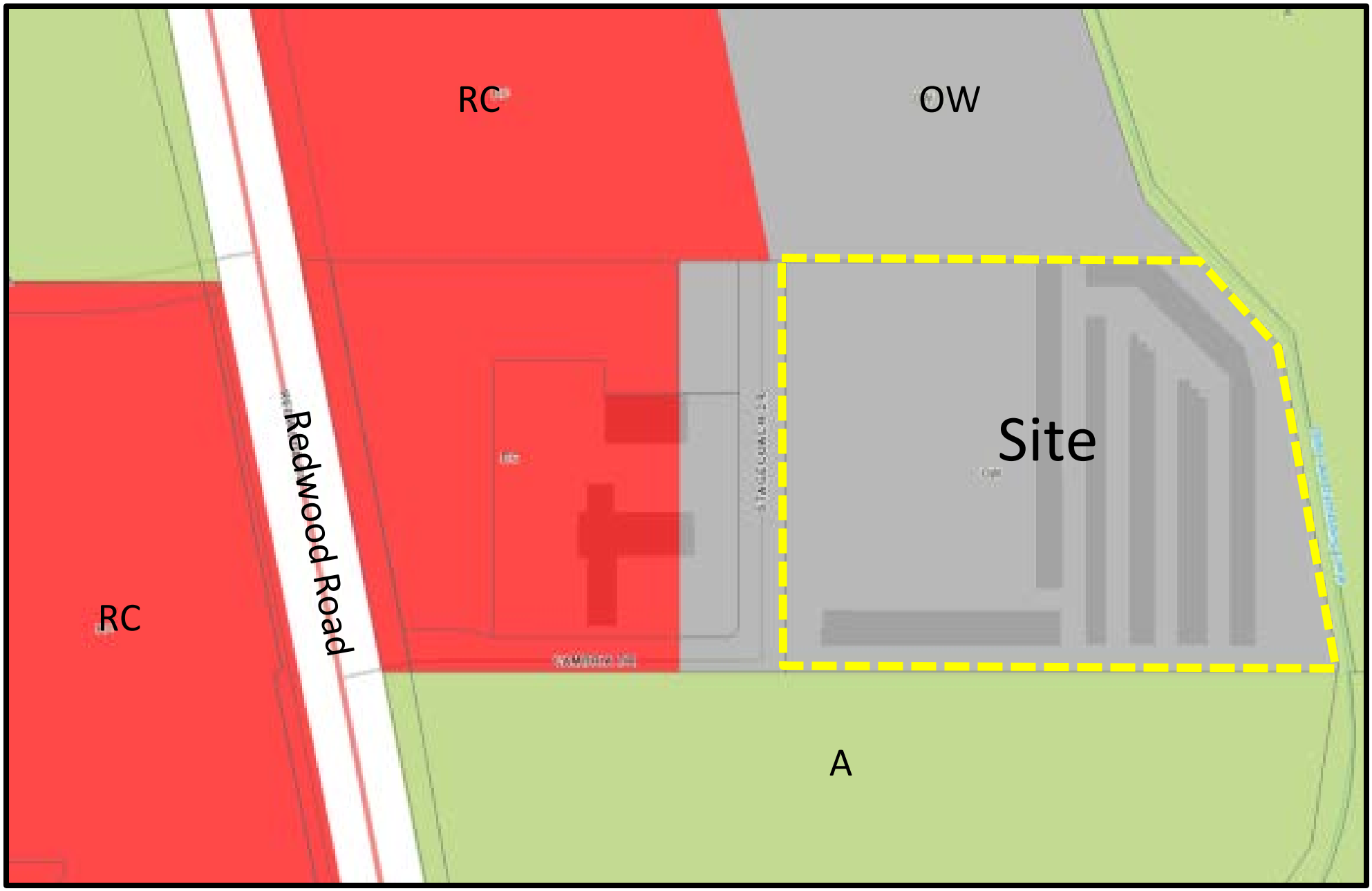

Aerial Photo

Exhibit C

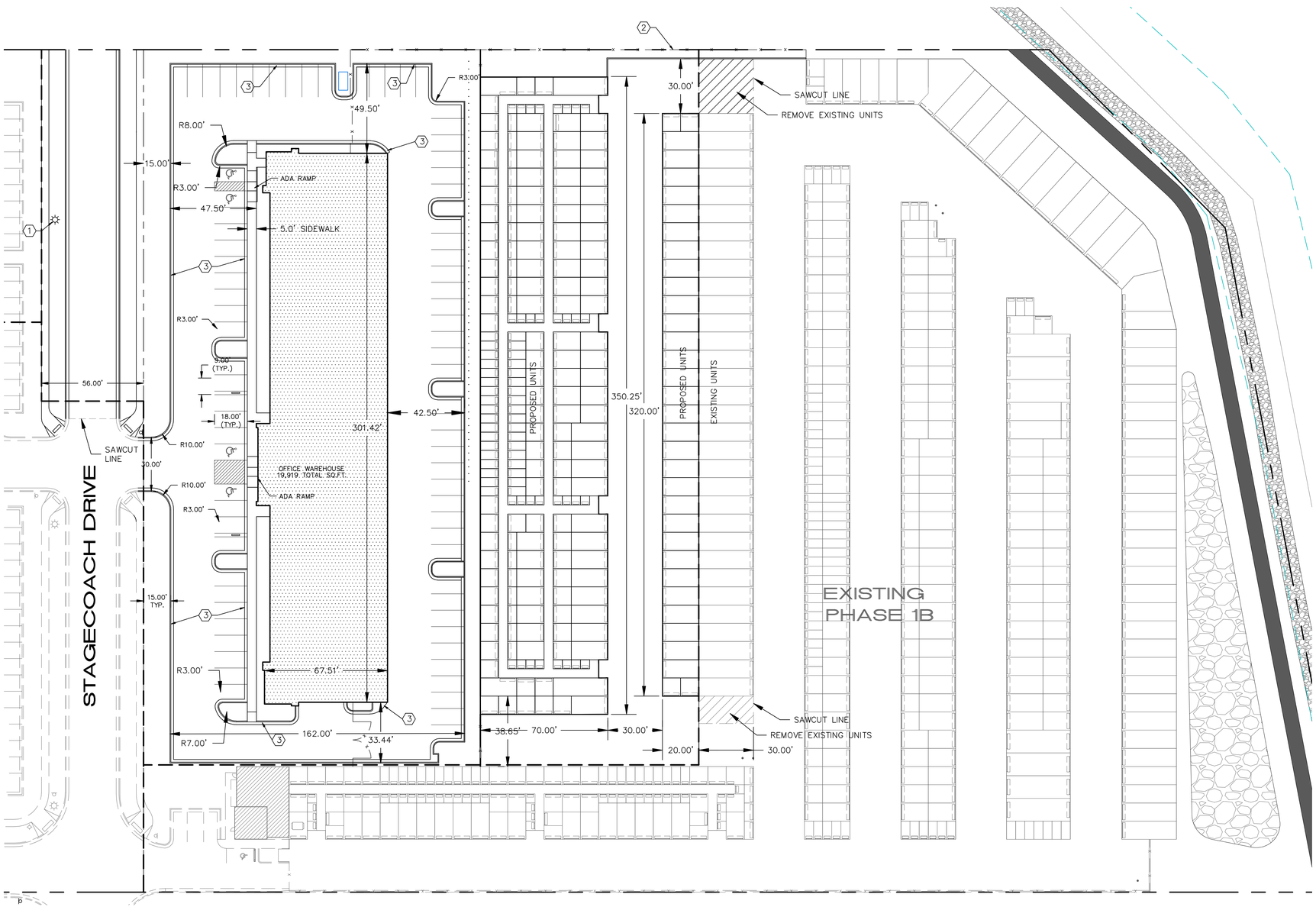

SITE ANALYSIS

LEGAL JURISDICTION:	SARATOGA SPRINGS
PLANNING ZONE:	OFFICE WAREHOUSE

AREA TABULATIONS

TOTAL AREA SITE 2B:	2.75 ACRES
BUILDING AREA:	1.15 ACRES
–OFFICE WAREHOUSE:	19,919 SQ. FT.
–STORAGE UNITS:	30,700 SQ. FT.
LANDSCAPE AREA	0.54 ACRE
PAVED SURFACE:	1.06 ACRES

PARKING TABULATIONS

OFFICE WAREHOUSE SITE STALLS = 79 STALLS
SEE BUILDING PLANS FOR INTERIOR STALLS

GENERAL NOTES

1. ALL CONSTRUCTION TO BE DONE ACCORDING TO SARATOGA SPRINGS CITY STANDARDS AND SPECIFICATIONS.
2. CURB AND GUTTER TO BE A REVERSE LIP WHERE ASPHALT SLOPE IS AWAY FROM CURB. WHERE ASPHLAT SLOPES TOWARD CURB, USE AS STANDARD CURB (SEE DETAILS THIS SHEET)
3. PERMANENT DETENTION FACILITIES TO BE OWNED AND MAINTAINED BY THE PROPERTY OWNERS AND ARE NOT TO BE ALTERED WITHOUT APPROVAL BY SARATOGA SPRINGS CITY COUNCIL AND CITY ENGINEER.
4. ALL STORM DRAIN BOXES TO BE 3'X3' INSIDE DIMENSION UNLESS OTHERWISE SPECIFIED
5. CONTRACTOR TO MEET ALL ADA REQUIREMENTS FOR THE SITE.

KEYED NOTES

1. PROPOSED 20' COMMERCIAL STREET LIGHT
2. FENCING TO MATCH EXISTING FENCING INSTALLED
3. FALL OUT CURB AND GUTTER (SEE STANDARD DETAIL ST-2)

0 30 60 90

(24"x36")
SCALE: 1" = 30'
(11"x17")
SCALE: 1" = 60'

REVISIONS			
NO.	DATE	DESCRIPTION	BY
1			
2			
3			
4			

J:\RYAN BYBEE\SARATOGA SPRINGS\1B-2B AMENDED 2013\SITE.dwg

DESIGNED BY:	TGT
DRAWN BY:	TT
CHECK BY:	TGT
DATE:	05/09/14
CADD FILE:	

TRANE ENGINEERING, P.C.
CONSULTING ENGINEERS AND LAND SURVEYORS
170 SOUTH INTERSTATE PLAZA DRIVE SUITE 230 LEHI, UTAH 84043 (801) 768-4544

SARATOGA SPRINGS, UTAH

NORTH SARATOGA CENTER
PHASE 2B AMENDED 2014

SITE PLAN

JOB R.BYBEE

SHEET NO. 2 OF 8

STORM WATER MANAGEMENT PLAN

1. THE CONTRACTOR IS TO FOLLOW THE BMP DETAILS AS OUTLINED AND ACCORDING TO SARATOGA SPRINGS CITY STANDARDS.
2. SEE SHEET 5 OF 7 FOR APPROPRIATE BMPS.
3. ALL INLETS TO BE PROTECTED DURING CONSTRUCTION FROM SILT

LEGEND

SILT FENCE

STORAGE AREA

1. CONTROL STORAGE OF ONSITE MATERIALS TO A DESIGNATED AREA WITH NO DRAINAGE OR WATERWAYS NEARBY.
2. ENSURE ALL ONSITE PERSONNEL UTILIZE DESIGNATED STORAGE AREA. DO NOT STORE EXCESSIVE AMOUNTS OF MATERIALS THAT WILL NOT BE UTILIZED ON SITE.
3. COVER MATERIALS WHEN OUTSIDE THE STORAGE AREA OR WHEN NOT IN USE AND PROTECT STORM DRAIN SYSTEM WHEN IN USE.

SILT FENCE

1. INSTALL SILT FENCE ALONG THE SOUTH EAST, AND NORTH PROPERTY LINES AS SHOWN AND AS PER MANUFACTURES SPECIFICATIONS.
2. INSPECT FENCE AFTER ANY RAINFALL AND REPAIR OR REPLACE ANY DAMAGED AREAS AND REMOVE ACCUMULATED SEDIMENT.

CONSTRUCTION ENTRANCE

1. CONSTRUCTION ENTRANCE TO BE INSTALLED WITH CRUSHED STONE AT A LOCATION WHERE TRUCKS LEAVE THE SITE TO A PAVED SURFACE.
2. PROVIDE BERMING AT WASH AREA AS NEEDED TO PREVENT SOIL LADEN WASH WATER FROM ENTERING THE STORM WATER FACILITIES.
3. GRAVEL AREA TO BE OF SUFFICIENT SIZE TO ACCOMMODATE THE TRAFFIC.

INLET PROTECTION

1. INSTALL SILT FENCE OR STRAW BALE SEDIMENT BARRIER AROUND STORM DRAIN INLETS.
2. INSPECT INLET PROTECTION AFTER STORM EVENT.
3. UPON COMPLETION OF CURB AND GUTTER, PROTECT INLETS WITH FILTER FABRIC AND COURSE GRAVEL OR EQUIVALENT MEASURE.

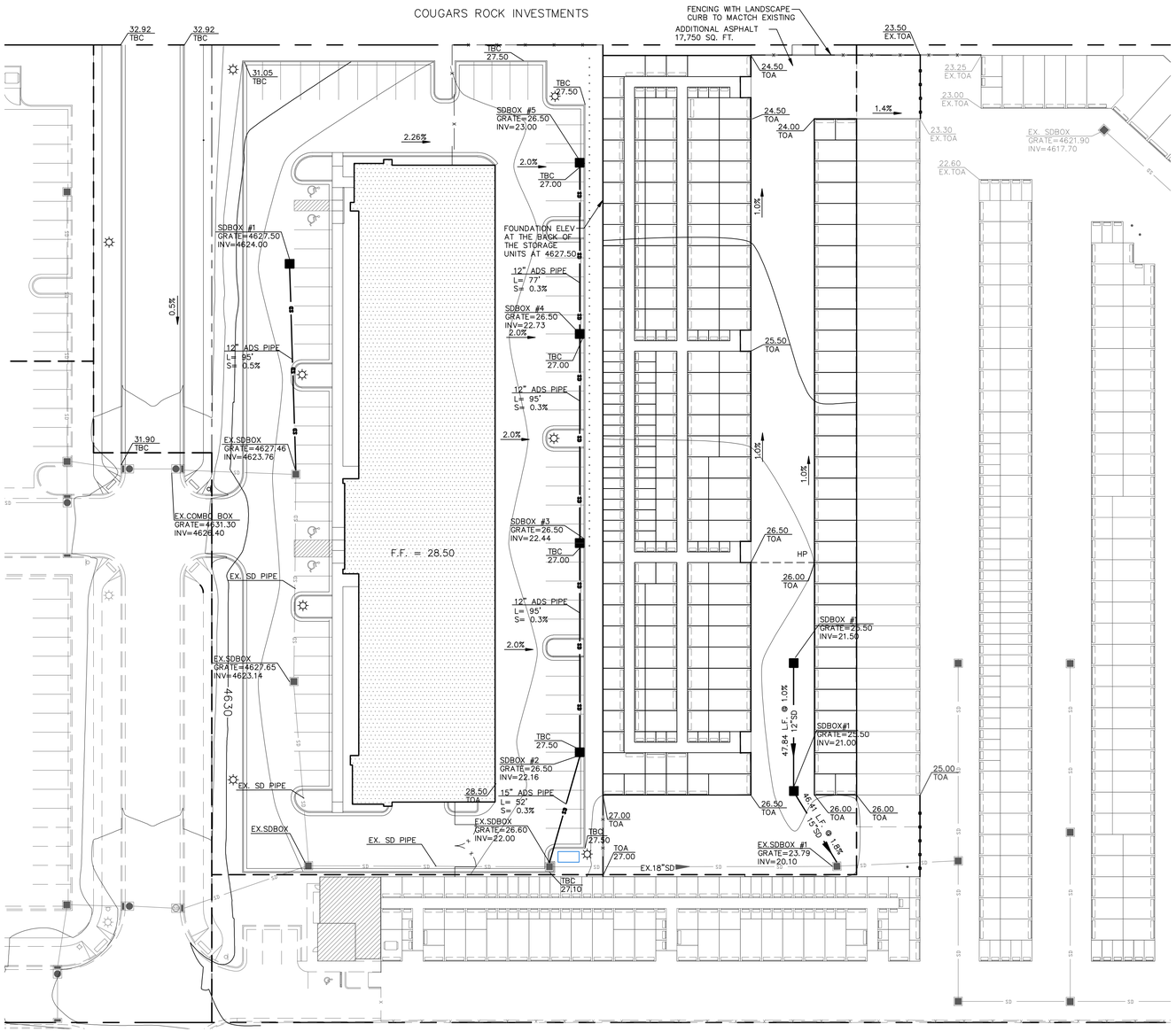

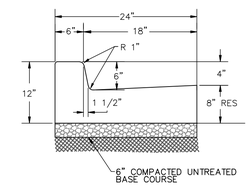

24" HIGH BACK CURB & GUTTER
–NTS–

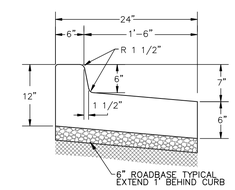

SPILL TYPE CURB & GUTTER
–NTS–

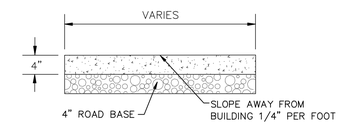

ONSITE SIDEWALK
–NTS–

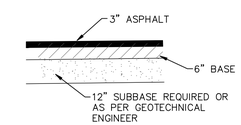

ASPHALT SECTION
–NTS–

GENERAL NOTES

1. ALL CONSTRUCTION TO BE DONE ACCORDING TO SARATOGA SPRINGS CITY STANDARDS AND SPECIFICATIONS.
2. CURB AND GUTTER TO BE A REVERSE LIP WHERE ASPHALT SLOPE IS AWAY FROM CURB. WHERE ASPHLAT SLOPES TOWARD CURB, USE AS STANDARD CURB (SEE DETAILS THIS SHEET). THE ONLY STANDARD CURB ON SITE IS LOCATED AT THE EAST SIDE OF THE OFFICE WAREHOUSE BUILDING, ALL OTHER CURB IS REVERSE LIP.
3. PERMANENT DETENTION FACILITIES TO BE OWNED AND MAINTAINED BY THE PROPERTY OWNERS AND ARE NOT TO BE ALTERED WITHOUT APPROVAL BY SARATOGA SPRINGS CITY COUNCIL AND CITY ENGINEER.
4. ALL STORM DRAIN BOXES TO BE 3'X3' INSIDE DIMENSION UNLESS OTHERWISE SPECIFIED
5. CONTRACTOR TO MEET ALL ADA REQUIREMENTS FOR THE SITE.
6. DETENTION CALCULATIONS WERE PROVIDED WITH THE ORIGINAL PLANSET AND THE DETENTION AREA WAS CONSTRUCTED WITH PHASE 2A WITH A DESIGNED CAPACITY OF 30,276 CUBIC FEET.

KEYED NOTES

1. **PROPOSED DUMPSTER LOCATION, SEE ARCHITECTURAL DRAWINGS FOR DETAILS.**
2. **CONST. 5' CONCRETE WATERWAY AS PER SARATOGA SPRINGS CITY STANDARDS**
3. **CONST. ADA RAMP AS PER SARATOGA SPRINGS CITY STANDARDS**
4. **INSTALL STORMCEPTOR OIL WATER SEPERATOR BY RINKER OR EQUIVALANT (SEE DETAIL ON SHEET 11)**

0 30 60 90

(24"x36")
SCALE: 1" = 30'
(11"x17")
SCALE: 1" = 60'

REVISIONS					
NO.	DATE	DESCRIPTION	BY	DESIGNED BY:	TGT
1	04/25/11	ADJUSTED STORAGE UNITS	TGT	DRAWN BY:	TT
2	05/20/13	ADDITIONAL STORAGE UNITS	TGT	CHECK BY:	TGT
3				DATE:	03/15/14
4				CODO FILE:	

J:\RYAN BYBEE\SARATOGA SPRINGS\1B-2B AMENDED 2013\GRADING.dwg

TRANE ENGINEERING, P.C.
CONSULTING ENGINEERS AND LAND SURVEYORS
170 SOUTH INTERSTATE PLAZA DRIVE SUITE 230 LEHI, UTAH 84043 (801) 768-4544

SARATOGA SPRINGS, UTAH

NORTH SARATOGA CENTER
PHASE 2B AMENDED 2014

GRADING, DRAINAGE AND EROSION

JOB R.BYBEE

SHEET NO. 4 OF 8

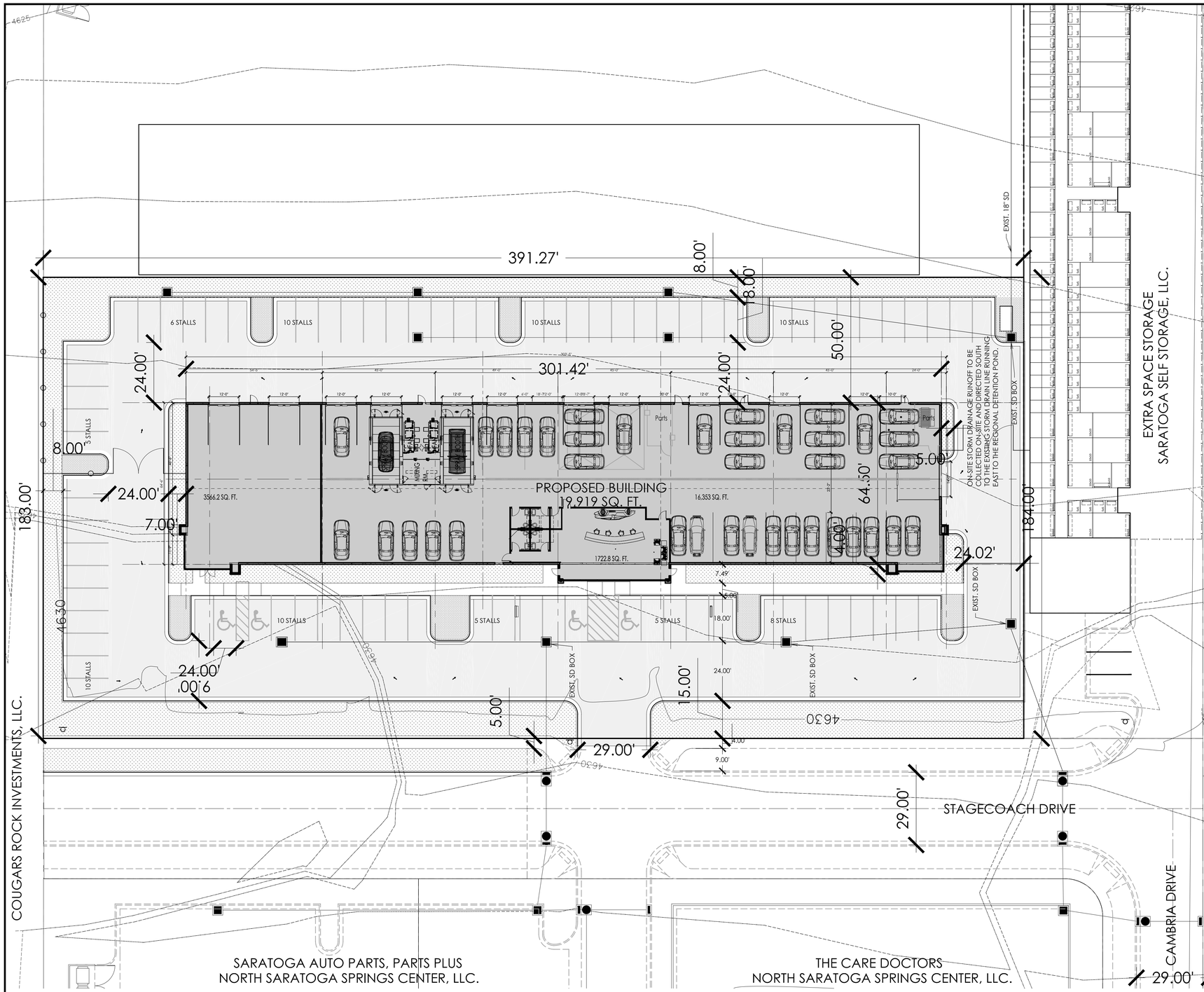

1 PRELIMINARY SITE PLAN

SCALE (24x36): 1" = 20'
SCALE (11x17): 1" = 40'

BUILDING AREAS:

	BUILDING SQ. FT.
MAIN FLOOR	(19,919 SQ. FT.)
OFFICE	1,734 sq. ft.
SERVICE BAYS	2,204 sq. ft.
CARWASH & DRIVE AISLES	12,447 sq. ft.
UPPER FLOOR	(1,549 sq. ft.)
OFFICE	1,549 sq. ft.
TOTAL	21,468 SQ. FT.

NOTE:
1. ALL AREA CALCULATIONS ARE APPROXIMATE AND CAN CHANGE DUE TO CONSTRUCTION TOLERANCES.

NORTH

LOT AREAS:

	SQ. FT. / ACRES
LOT	71,994 SQ. FT. / 1.65 ACRES
BUILDING FOOTPRINT	19,919 SQ. FT. / 0.46 ACRES
LANDSCAPING	16,546 SQ. FT. / 0.38 ACRES
INTERIOR PARKING	1,384 SQ. FT. / 0.03 ACRES
REMAINING CONCRETE	15,162 SQ. FT. / 0.35 ACRES

NOTE:
1. ALL AREA CALCULATIONS ARE APPROXIMATE AND CAN CHANGE DUE TO CONSTRUCTION TOLERANCES.

PARKING REQUIREMENTS:

	SQ. FT.	CITY REQM'T	
OFFICE			
MAIN	1,734 sq. ft.	8.67	(5/1000)
UPPER	0 sq. ft.	0.00	(5/1000)
AUTO REPAIR			
MAIN	2,204 sq. ft.	22.04	(2 PER 200 SQ. FT.)
CARWASH			
MAIN	12,447 sq. ft. +		
UPPER	0 sq. ft.	62.23	(5/1000)
AUTO, BOAT, RV, ETC. SALES & SERVICE			
MAIN	3,534 sq. ft.	17.67	(5/1000)
TOTAL REQUIRED:		111 (110.61)	

TOTAL PROVIDED: 119
- REPAIR BAYS: 9
- INTERIOR QUEUING/REPAIR: 31
- PARKING: 75
- ACCESSIBLE SPACES: 4 (4 REQ'D - 76 to 100)

REFERENCED CODES:
- SECTION 19.09.11 OF OF THE SARATOGA CITY, UTAH CODE (FOR CITY REQUIREMENTS)

NOTES:
1. ALL AREA CALCULATIONS ARE APPROXIMATE AND CAN CHANGE DUE TO CONSTRUCTION TOLERANCES.

LANDSCAPING AREAS:

	SQ. FT.	CITY REQ'T
PARKING AREA	33,567 SQ. FT.	1/10 PARKING LOT ISLANDS REQ'D)
PARKING LANDSCAPING	1,384 SQ. FT.	
TOTAL LANDSCAPED AREA	16,546 S.F. / 22.98 %	20% FRONT AND PARKING

NOTE:
1. PARKING AREA DOES NOT INCLUDE TRUCK MANUVERING AREA OR LANDSCAPED BUFFER AS DIMENSIONED.
2. LANDSCAPED AREAS DO NOT INCLUDE HARD SURFACE AREAS(WALKWAYS, BIKE RACKS, CURB & GUTTERS) OR LANDSCAPED AREAS OUTSIDE OF THE PARKING AREA(SEE SITE PLAN FOR SPECIFIC DIMENSIONS FOR LANDSCAPED BUFFERS).
3. ALL AREA CALCULATIONS ARE APPROXIMATE AND CAN CHANGE DUE TO CONSTRUCTION TOLERANCES.

PARCEL IDENTIFICATION:

TAX ID NUMBER: 58:023:0210

ADDRESS: 2148 NORTH STAGECOACH DRIVE (CERTIFICATE OF ADDRESS NO. #####)

LEGAL DESCRIPTON (INCLUDING EXTRA SPACE STORAGE):

COM S 1269.03 FT & E 2242.01 FT FR NW COR. SEC. 11, T5S, R1W, SLB&M.; E 497.35 FT; S 44 DEG 42' 0" E 137.54 FT; S 10 DEG 49' 0" E 362.87 FT; S 9 DEG 2' 1" W 8.58 FT; W 660.85 FT; N 462.66 FT TO BEG. AREA 6.490 AC.

2 VICINICTY MAP

SCALE (24x36): N.T.S.
SCALE (11x17): N.T.S.

aeurbia
architects and engineers
2875 south decker lake drive, suite 275
salt lake city, utah 84119
phone: 801.746.0456 - fax: 801.575.6456
webpage: aeurbia.com

LICENSED PROFESSIONAL STRUCTURAL ENGINEER
No. 174000
JAMES A. WILLIAMS
STATE OF UTAH

NEW OFFICE WAREHOUSE

UNIQUE AUTOBODY / NORTH SARATOGA CENTER

2148 Stagecoach Dr., Saratoga Springs, UT

AE2013__079

Preliminary Site Plan

REVISIONS:
-
-
-

DATE: FEB. 5, 2014

SHEET NO.

A0.0

COPYRIGHT ©
AE URBIA, LLC.

4/17/2014 2:38:29 PM

Revision Number	Revision Date	Revision Description

METAL PANEL SYSTEM (ALUMINUM) = 1910.61 SQ. FT. (12.2%)

STAIN CONCRETE (CHARCOAL) = 1248.72 SQ. FT. (8.0%)

EXPOSED CONCRETE (LT. GRAY) = 12510.39 SQ. FT. (79.8%)

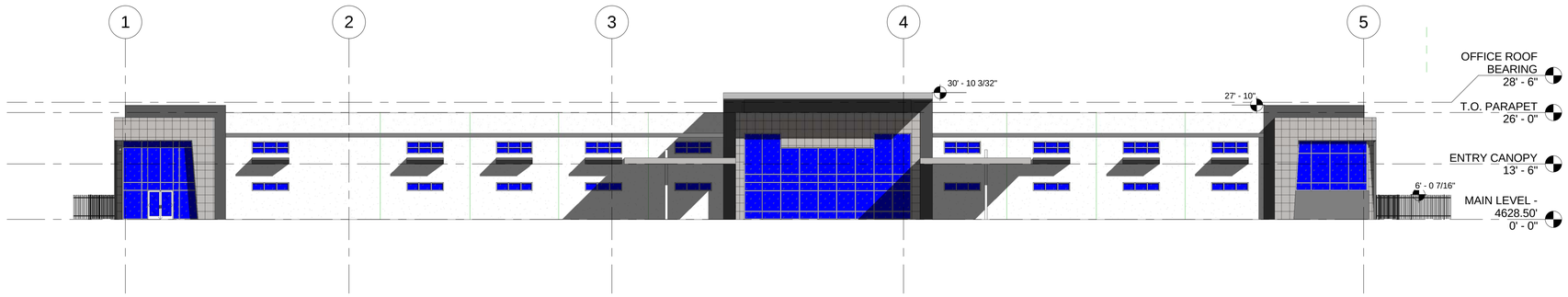

1 Copy of WEST ELEVATION
1/16" = 1'-0"

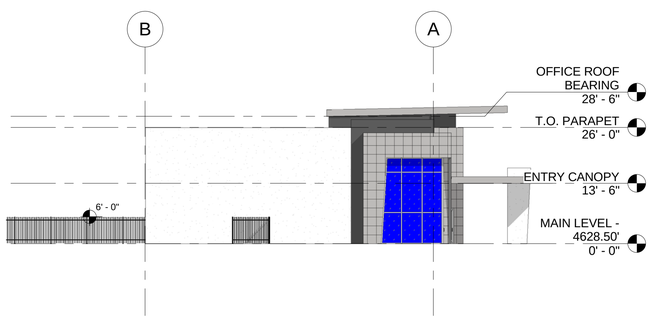

3 Copy of NORTH ELEVATION
1/16" = 1'-0"

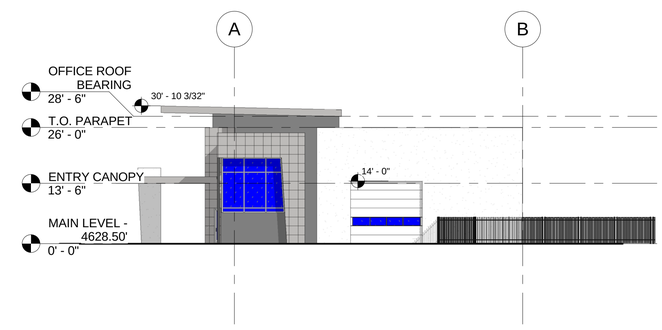

4 Copy of SOUTH ELEVATION
1/16" = 1'-0"

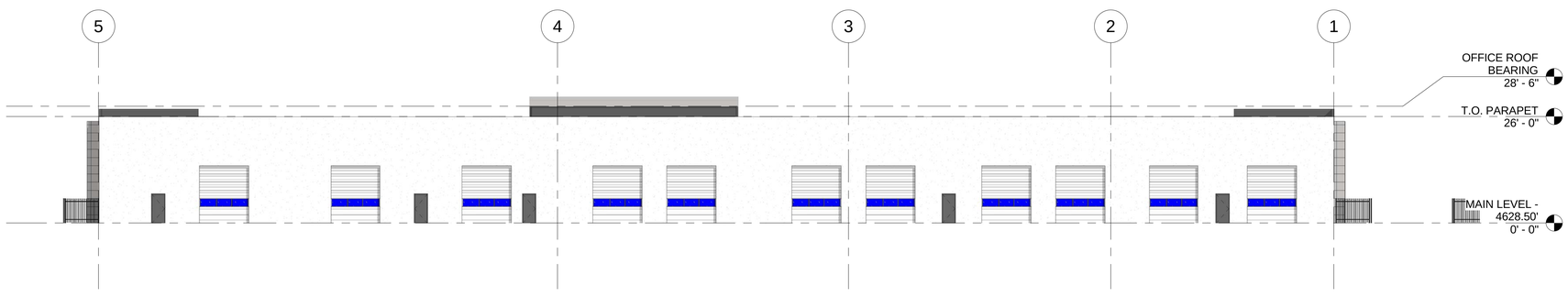

2 Copy of EAST ELEVATION
1/16" = 1'-0"

ae urbia architects and engineers
2875 south decker lake drive, suite 275
salt lake city, utah 84119
phone: 801.746.0456 - fax: 801.575.6456
webpage: aeurbia.com

UNIQUE AUTOBODY

24## STAGECOACH DRIVE
SARATOGA SPRINGS, UT

AE2013079

WEST ELEVATION

REVISIONS:

DATE: 2014.04.15

SHEET #:

A3.4

COPYRIGHT
AE URBIA, LLC.

F:\AE URBIA JOBS\2013\AE2013 079 - UNIQUE AUTOBODY - New Saratoga Facility\Revit\Local\Jones\AE2013_079_Unique Autobody_Local_Jones.rvt

ELECTRICAL GENERAL NOTES:

1. PARKING AREA LUMINANCE CALCULATION:
   MAX/MIN – 10:1
   AVG/MIN – 4:1

ELECTRICAL KEYED NOTES:

1. ORIENTATION OF FIXTURE INDICATES ORIENTATION OF OPTICS NOT ORIENTATION OF POLE FIXTURE HEAD. FIXTURE HEAD ORIENTATION SHALL BE DETERMINED BY OWNER. CONTRACTOR SHALL FIELD ROTATE OPTICS AS INDICATED.

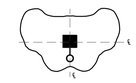

2. ILLUMINATION LEVEL INDICATED IN FOOT-CANDLES.

KEYED NOTES:

1. POLE BASE DEPTH BELOW GRADE SHALL BE 10% OF POLE HEIGHT PLUS 2 FEET (APPROX. 5 FT)

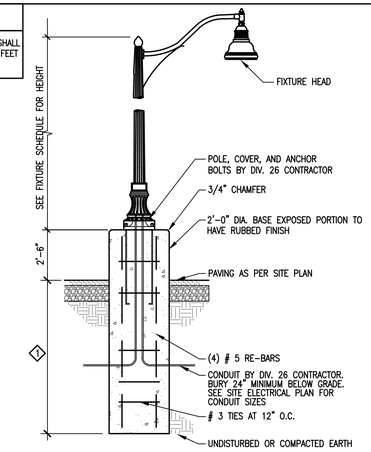

POLE BASE DETAIL

SCALE: NONE

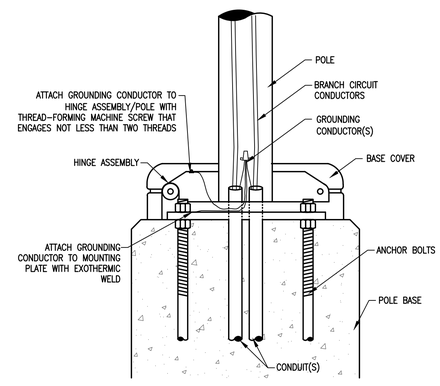

POLE LIGHT GROUNDING DETAIL

SCALE: NONE

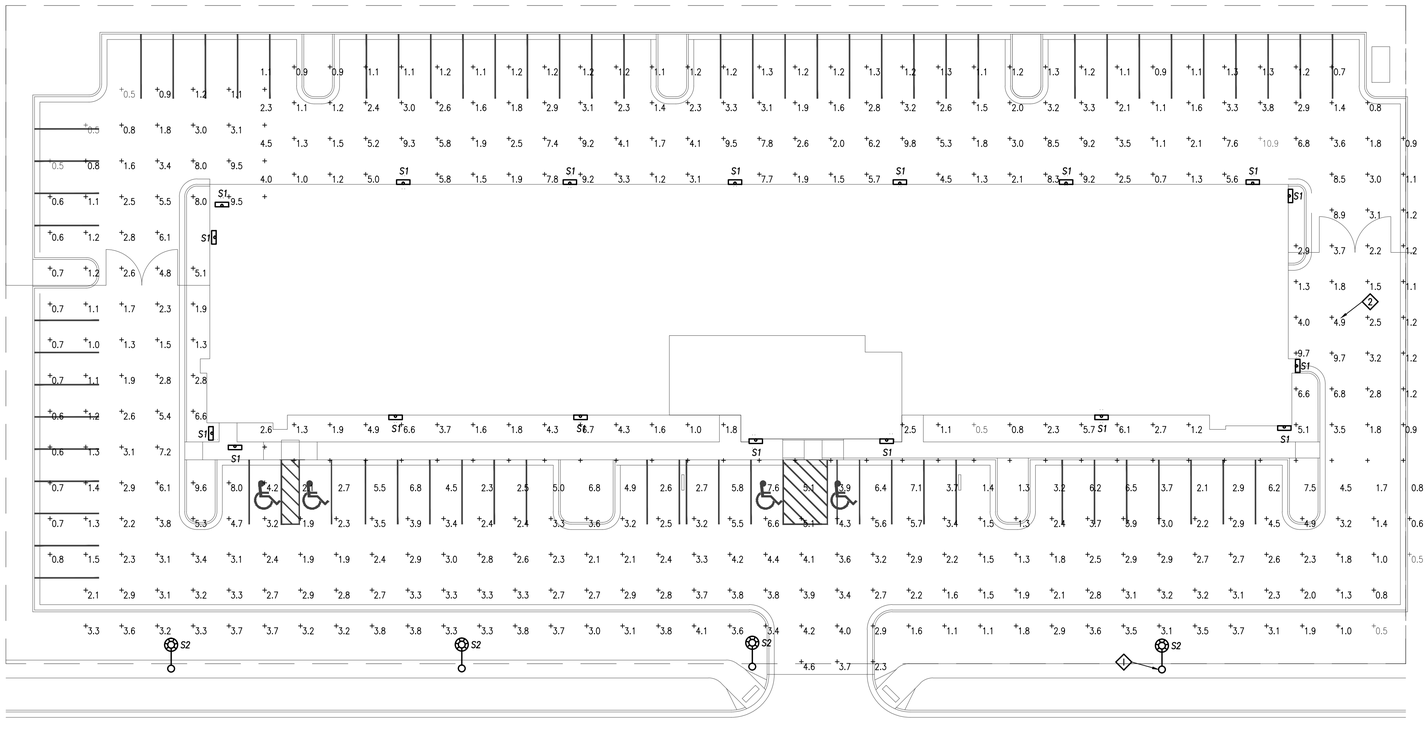

SITE PHOTOMETRIC PLAN

SCALE: 1"=20'

ae urbia
architects and engineers
2875 south decker lake drive, suite 275
salt lake city, utah 84171
phone: 801.746.0456 - fax: 801.575.6456
webpage: aeurbia.com

REGISTERED PROFESSIONAL ENGINEER
STEVEN R. GRIFFITHS
3/16/14
STATE OF UTAH

UNIQUE AUTOBODY

24## STAGECOACH DRIVE
SARATOGA SPRINGS, UT

AE2013.079

REVISIONS:

DATE: 04-16-2014
SHEET NO.

E1.1

COPYRIGHT © AE URBIA, LLC.

ROYAL ENGINEERING
ELECTRICAL
2336 SOUTH STATE SUITE 100
PHONE: 801.375.2228
MECHANICAL
PROVO, UTAH 84606
FAX: 801.375.2676

COPYRIGHT© JOB# J14137.01 DATE PLOTTED: 04/16/2014

THESE DOCUMENTS ARE INSTRUMENTS OF PROFESSIONAL SERVICE AND THE INFORMATION CONTAINED HEREIN IS INCOMPLETE UNLESS IN CONJUNCTION WITH ROYAL ENGINEERING'S INTERPRETATIONS, DECISIONS, OBSERVATIONS AND ADMINISTRATIONS. USE OR REPRODUCTION OF THESE DOCUMENTS IN WHOLE OR IN PART WITHOUT WRITTEN PERMISSION OF ROYAL ENGINEERING VIOLATES THE COPYRIGHT, STATUTORY AND OTHER RESERVED RIGHTS. REFER TO ACT 17 U.S.C. PAR. 511 (1990)1. WHICH PREEMPTS STATE AND LOCAL PUBLIC RECORD ACTS. REFER TO ACT 17 U.S.C. PAR. 301 (1990)1.

COMMERCIAL STREET LIGHT CONNECTION DETAIL

NOTES:

1. COMMERCIAL LIGHT POLES SHALL BE LOCATED AS INDICATED ON THE APPROVED LIGHTING SITE PLAN; AND AS DESCRIBED IN SECTION 16540 OF THE CITY STANDARDS.

2. LIGHT POLES AND LIGHT FIXTURES SHALL CONFORM TO THE REQUIREMENTS OF SECTION 16540 OF THE CITY STANDARDS; AND SHALL BE ACCEPTABLE TO THE CITY ENGINEER.

3. EACH COMMERCIAL LIGHT SHALL HAVE A JUNCTION BOX WITH A FUSE.

4. FUSE LIVE CONDUCTOR IN JUNCTION BOXES.

5. MARK JUNCTION BOX COVERS WITH "STREET LIGHTING".

6. INSTALL 1" SCH 40 PVC CONDUITS WITH 24" COVER AND SAND BEDDING.

7. WIRES FROM RMP POWER SOURCE TO JUNCTION BOXES TO BE SINGLE CONDUCTOR (NOT DUPLEX) # 6 AWG XHHW-2 Cu. IN COLORS NOTED ON DETAIL.

8. CONTRACTOR TO INSTALL JUNCTION BOX WITH FUSE, BOX TO BE LOCATED 4' MIN AND 10' MAX FROM RMP SOURCE. PROVIDE 1" SCH 40 CONDUIT TO RMP SOURCE. PROVIDE CONDUCTORS LONG ENOUGH TO REACH RMP POWER SOURCE PLUS 5'. CONTRACTOR SHALL SUPPLY PULL STRING IN CONDUIT.

9. CONNECT GROUND WIRE TO METAL SHELL OF LIGHT POLE.

10. FUSE ASSEMBLY SHALL BE (1) BUSSMAN HEB-JJ, PN.44229 WTH (2) BUSSMAN 2A0660, PN.44344. NO SUBSTITUTIONS.

11. FUSE AT POLE SHALL BE 5 AMPS PER FIXTURE HEAD SERVED. FUSE AT MAIN FUSE BOX SHALL BE 5 AMPS PER FIXTURE HEAD SERVED.

12. SQUID ASSEMBLY SHALL BE BLACKBURN USB335, PN.2136122. NO SUBSTITUTIONS

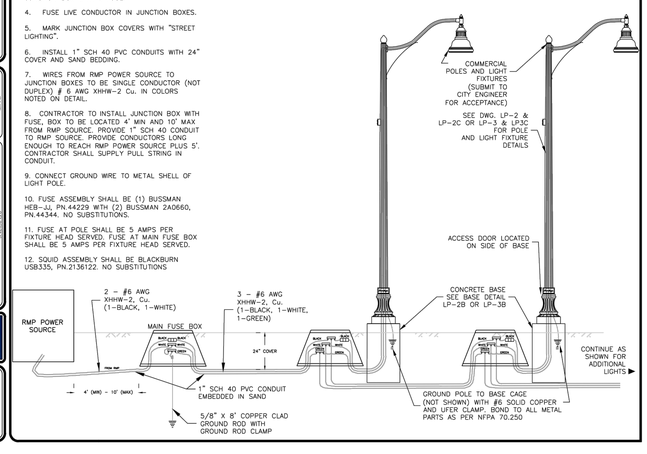

SARATOGA SPRINGS CITY

LP-5

STREET LIGHTS

CONNECTION DETAILS

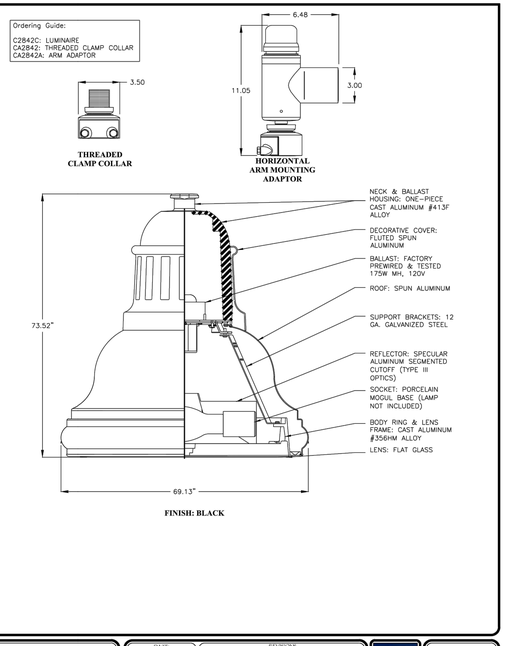

FINISH: BLACK

LUMINARE COLLECTOR/ COMMERCIAL STREET LIGHT

DATE: FEBRAVY 2013	REVISIONS: REV DATE BY COMMENTS
DRAWING NAME: LP-2C	
DRAWN BY: CJG	
CHECKED: APPROVED:	SARATOGA SPRINGS CITY — 1307 N. COMMERCE DR. SUITE 200 SARATOGA SPRINGS, UT 84045 PHONE: 801-766-9793 FAX: 801766766

STANDARD DETAILS

STREET LIGHTS

LP-2C

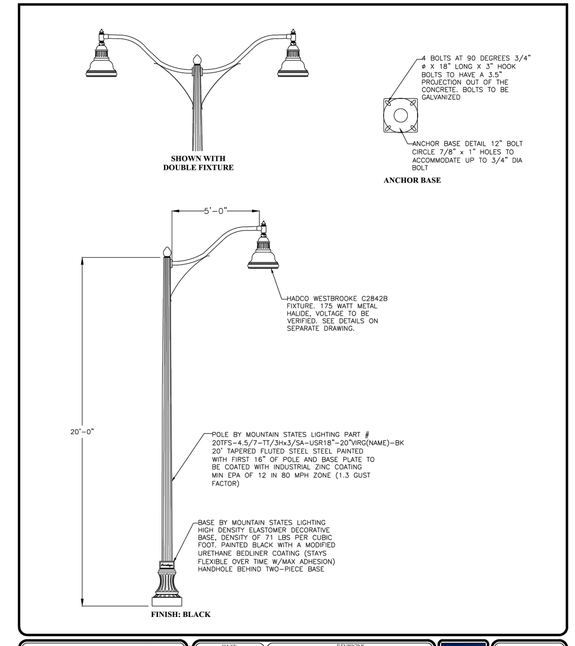

FINISH: BLACK

20' STREET LIGHT COLLECTOR / COMMERCIAL

DATE: FEBRAVY 2013	REVISIONS: REV DATE BY COMMENTS
DRAWING NAME: LP-2	
DRAWN BY: CJG	
CHECKED: APPROVED:	SARATOGA SPRINGS CITY — 1307 N. COMMERCE DR. SUITE 200 SARATOGA SPRINGS, UT 84045 PHONE: 801-766-9793 FAX: 801766766

STANDARD DETAILS

STREET LIGHTS

LP-2

aeurbia
architects and engineers
2875 south decker lake drive, suite 275
salt lake city, utah 84171
phone: 801.746.0456 - fax: 801.575.6456
webpage: aeurbia.com

STEVEN R. GRIFFITHS
4/16/14
STATE OF UTAH

UNIQUE AUTOBODY

24** STAGECOACH DRIVE
SARATOGA SPRINGS, UT

AE2013.079

REVISIONS:

DATE: 04-16-2014

SHEET NO.

E2.1

COPYRIGHT © AE URBIA, LLC.

ROYAL ENGINEERING
ELECTRICAL
2336 SOUTH STATE SUITE 100
PHONE: 801.375.2228
MECHANICAL
PROVO, UTAH 84606
FAX: 801.375.2678

COPYRIGHT © JOB# J14137.01 DATE PLOTTED: 04/16/2014

THESE DOCUMENTS ARE INSTRUMENTS OF PROFESSIONAL SERVICE AND THE INFORMATION CONTAINED HEREIN IS INCOMPLETE UNLESS IN CONJUNCTION WITH ALL OTHER PARTS OF THE PROJECT FOR WHICH THEY WERE PREPARED. FOR ADMINISTRATIVE, USE OR REPRODUCTION OF THESE DOCUMENTS IN WHOLE OR IN PART WITHOUT ROYAL ENGINEERING'S CONSENT IS IN VIOLATION OF COMMON LAW. COPYRIGHT PROTECTION CLAIMED UNDER 17 U.S.C. PAR. 102 (1991). 17 U.S.C. PAR. 511 (1991), WHICH PREEMPTS STATE AND LOCAL PUBLIC RECORD ACTS. REFER TO ACT 17 U.S.C. PAR. 301 (1991).

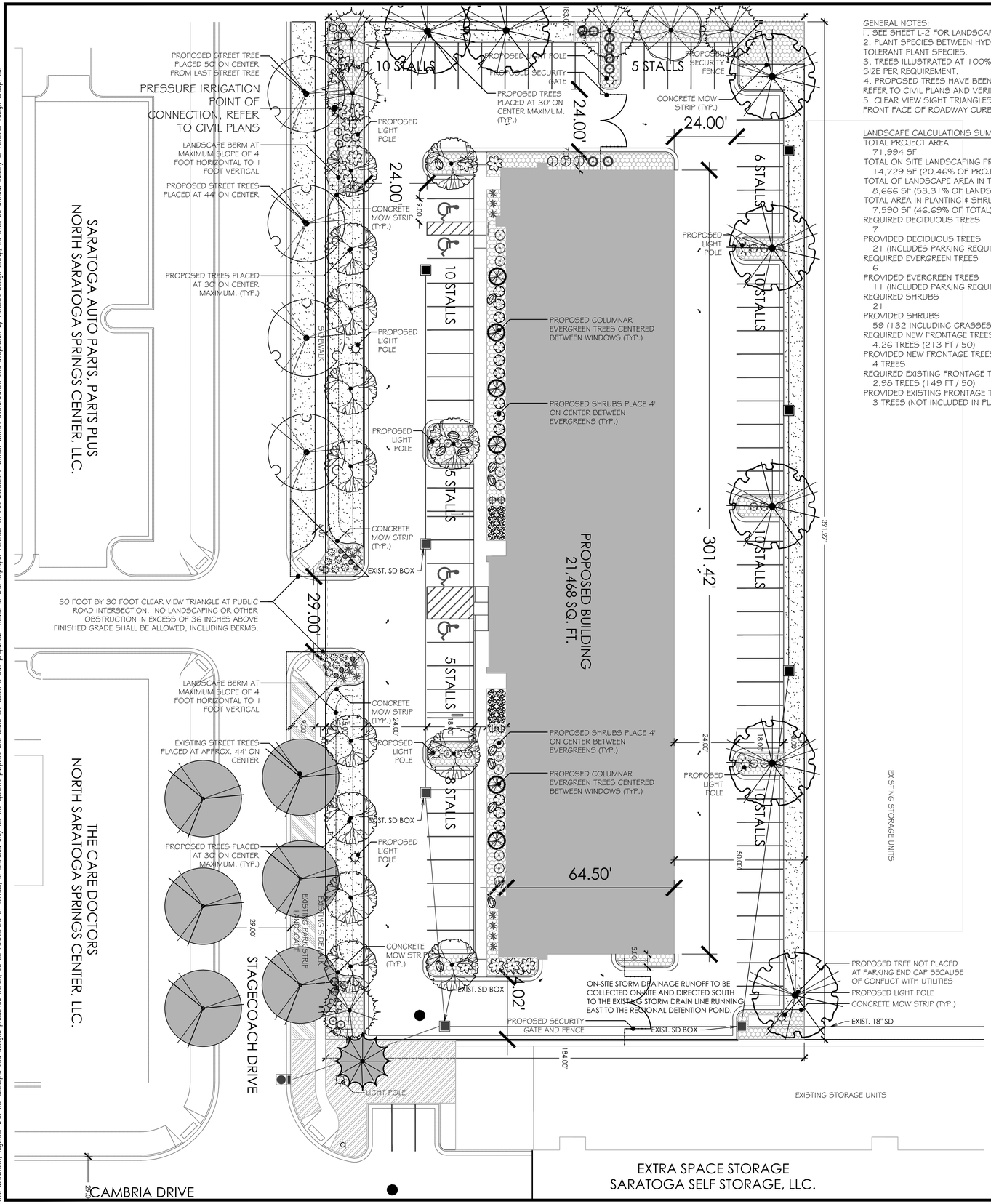

GENERAL NOTES:
1. SEE SHEET L-2 FOR LANDSCAPE NOTES AND DETAILS.
2. PLANT SPECIES BETWEEN HYDRO ZONE 0-3 ARE DROUGHT TOLERANT PLANT SPECIES.
3. TREES ILLUSTRATED AT 100% OF MATURE GROWTH CANOPY SIZE PER REQUIREMENT.
4. PROPOSED TREES HAVE BEEN LOCATED TO AVOID UTILITIES, REFER TO CIVIL PLANS AND VERIFY IN FIELD BEFORE PLANTING.
5. CLEAR VIEW SIGHT TRIANGLES ARE MEASURED FROM THE FRONT FACE OF ROADWAY CURBS.

LANDSCAPE CALCULATIONS SUMMARY
TOTAL PROJECT AREA
71,994 SF
TOTAL ON SITE LANDSCAPING PROVIDED
14,729 SF (20.46% OF PROJECT SITE)
TOTAL OF LANDSCAPE AREA IN TURF GRASS
8,666 SF (53.31% OF LANDSCAPE)
TOTAL AREA IN PLANTING & SHRUB BEDS (NO MORE THAN 50% ALLOWED)
7,590 SF (46.69% OF TOTAL)
REQUIRED DECIDUOUS TREES
7
PROVIDED DECIDUOUS TREES
21 (INCLUDES PARKING REQUIRED TREES)
REQUIRED EVERGREEN TREES
6
PROVIDED EVERGREEN TREES
11 (INCLUDED PARKING REQUIRED TREES)
REQUIRED SHRUBS
21
PROVIDED SHRUBS
59 (132 INCLUDING GRASSES & ANNUALS/PERENNIALS)
REQUIRED NEW FRONTAGE TREES ALONG STAGECOACH DRIVE
4.26 TREES (213 FT / 50)
PROVIDED NEW FRONTAGE TREES ALONG STAGECOACH DRIVE
4 TREES
REQUIRED EXISTING FRONTAGE TREES ALONG STAGECOACH DRIVE
2.98 TREES (149 FT / 50)
PROVIDED EXISTING FRONTAGE TREES ALONG STAGECOACH DRIVE
3 TREES (NOT INCLUDED IN PLANT TOTALS)

PLANT SCHEDULE

TREES	BOTANICAL NAME / COMMON NAME	CONT	CAL	SIZE	QTY
	Acer grandidentatum `Highland Park` / Highland Park Bigtooth Maple Hydro Zone 1 - to meet parking requirement	B & B	2.5"Cal		1
	Acer platanoides `Deborah` / Deborah Maple Hydro Zone 3 - Street tree (or match existing street tree species)	B & B	2.5"Cal		4
	Amelanchier x grandiflora `Autumn Brilliance` / `Autumn Brilliance` Serviceberry Hydro Zone 1 - to meet parking requirements	B & B	2"Cal		13
	Gleditsia tnacanthos inermis `Sunburst` / Sunburst Common Honeylocust Hydro Zone 1 - to meet parking requirements	B & B	2.5"Cal		7
	Pinus nigra / Austnan Black Pine Hydro Zone 1 - Evergreen to screen parking & gate	B & B		6`	5
	Pinus nigra `Arnold Sentinel` / Arnold Sentinel Austnan Black Pine Hydro Zone 1 - Columnar evergreen to break up building facade	B & B		6`	6

SHRUBS	BOTANICAL NAME / COMMON NAME	CONT	QTY
	Berberis thunbergii `Bagatelle` / Bagatelle Red Barberry Hydro Zone 2	2 gal	8
	Berberis thunbergii `Cnmson Pygmy` / Cnmson Pygmy Barberry Hydro Zone 2	5 gal	4
	Buxus microphylla `Winter Gem` / Globe Winter Gem Boxwood Hydro Zone 2 - Evergreen	5 gal	3
	Euonymus alatus `Compactus` / Compact Burning Bush Hydro Zone 2	5 gal	12
	Perovskia atnplicifolia `Blue Spires` / Russian Sage Hydro Zone 1	5 gal	12
	Pinus mugo mugo / Dwarf Mugo Pine Hydro Zone 1 - Evergreen	5 gal	8
	Spiraea japonica `Neon Flash` / Neon Flash Spirea Hydro Zone 4	5 gal	12

ANNUALS/PERENNIALS	BOTANICAL NAME / COMMON NAME	CONT	QTY
	Hemerocallis x `Pardon Me` / Pardon Me Daylily Hydro Zone 2	1 gal	16
	Hemerocallis x `Stella de Oro` / Stella de Oro Daylily Hydro Zone 2	1 gal	12

GRASSES	BOTANICAL NAME / COMMON NAME	CONT	QTY
	Calamagrostis x acutiflora `Karl Foerster` / Feather Reed Grass Hyrdo Zone 2	5 gal	15
	Miscanthus sinensis `Gracillimus` / Maiden Grass Hydro Zone 1	5 gal	16
	Pennisetum alopecuroides `Little Bunny` / Little Bunny Fountain Grass Hydro Zone 2	5 gal	14

Existing trees of various sizes and species located on & off the property and are to remain. Approximate location determined by Google Earth aerial image and canopy size is approximate. Protect existing trees during construction with construction fencing at the drip line of the trees.

Existing deciduous trees (typ.)

Existing evergreen trees (typ.)

TURF / MULCHES / ROCK

	8-12 CF LANDSCAPE BOULDER (BROWNS, REDS & GRAYS)	12 BOULDERS
	TURF GRASS BLEND - REFER TO NOTES AND DETAILS SHEET	8,666 S.F.
	4" DEPTH OF 3/4" TO 1-1/2" OF COLORED CRUSHED ROCK (BROWNS, REDS & GRAYS) OVER DEWITT PRO 5 WEED BARRIER, MATCHING EXISTING.	6,352 S.F.
	EXISTING ROCK MULCH WITHIN PARK STRIP ALONG PROPERTY FRONTAGE TO REMAIN	1,238 S.F.
	EXISTING ROCK MULCH NOT ON PROPERTY PROPERTY TO REMAIN	

NOTES:
1 - SEE SHEET L-4 FOR LANDSCAPE NOTES AND DETAILS.
2 - LANDSCAPE MATERIAL SQUARE FOOTAGES INCLUDE AREAS WITHIN THE PUBLIC RIGHT-OF-WAY.
3 - STEEL EDGING IS TO BE USED TO SEPARATE ALL LANDSCAPE MULCHES, EXCEPT WHERE CONCRETE EDGING IS SPECIFIED.
4 - CLEAR VIEW AREA AT STREET INTERSECTIONS IS TO BE MEASURED ALONG THE FRONT FACE OF CURB.

NORTH

0 20 40 60 feet
SCALE: 1" = 20'

CALL BEFORE YOU DIG!
IT'S THE LAW
BLUE STAKES 1 800 662 4111

NO.	REVISIONS	BY	DATE

PROJECT PROFESSIONAL: DCM
DESIGNER: DCM

Foresite Design Group, L.C.
PLANNING, LANDSCAPE ARCHITECTURE & SITE DESIGN SERVICES
13892 ARROW CREEK DRIVE
DRAPER, UTAH 84020
PHONE: 801.841.7464
www.foresitedesigngroup.com

UNIQUE AUTOBODY / NORTH SARATOGA CENTER
LANDSCAPE PLAN
2148 STAGECOACH DRIVE, SARATOGA SPRINGS, UTAH

LICENSED LANDSCAPE ARCHITECT
DAN C. MATTA
No. 106248
4/9/14
STATE OF UTAH

SHEET:
L-1

FILE NAME: FDG-038-LS
SCALE: 1"=20'

C:\FDG\Dropbox\Projects\AEUrbia\Unique Autobody\CAD\LS.dwg — Apr 15, 2014-8:35pm
This document, together with the concepts and designs presented herein, as an instrument of service, is intended only for the specific purpose and client for which it was prepared. Reuse of and improper reliance on this document without written authorization and adaptation by Foresite Design Group, LC shall be without liability to Foresite Design Group, LC.

SIGN 1

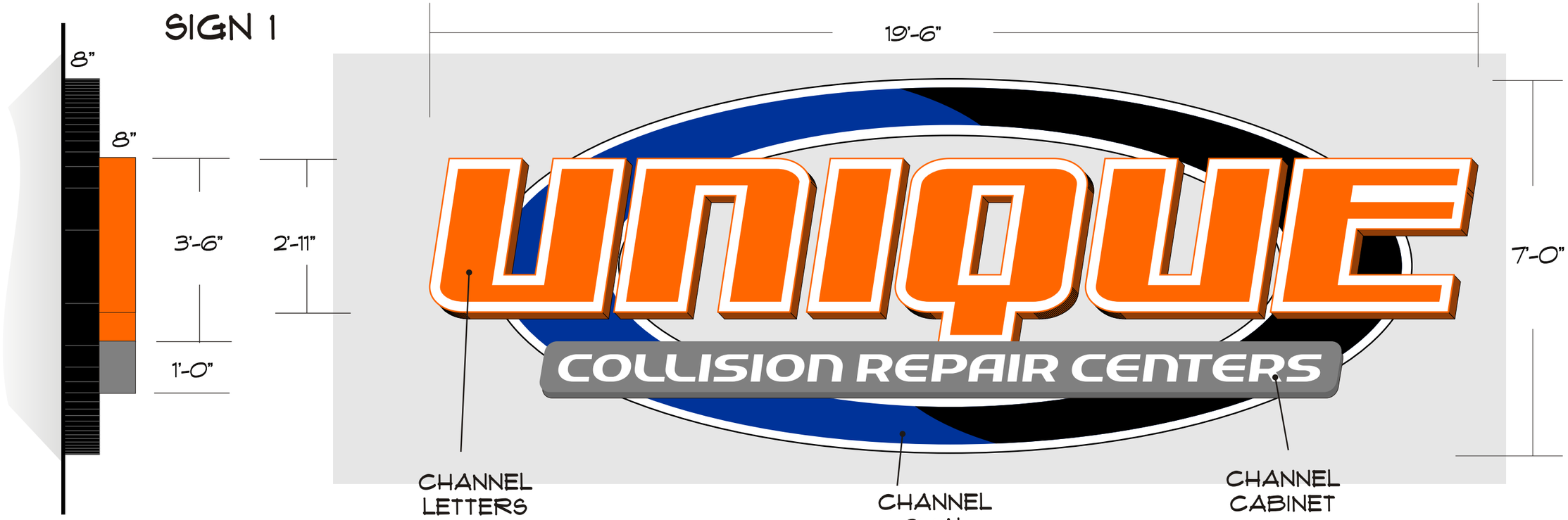

MANUFACTURE AND INSTALL
INTERNALLY ILLUMINATED SIGN

SCALE 1/2" = 1'

SING TO CONSIST OF CHANNEL OVAL,
CHANNEL LETTERS AND CHANNEL CABINET.
ALL BACKING AND RETURNS TO BE ALUMINUM
FABRICATED
FACES TO BE WHITE PLEX WITH TRANS 3M
VINYL DECORATION
1" TRIMCAP ATTACHED TO FACES AND RETURNS.
ALL ILLUMINATION TO BE LED.

SIGN 2

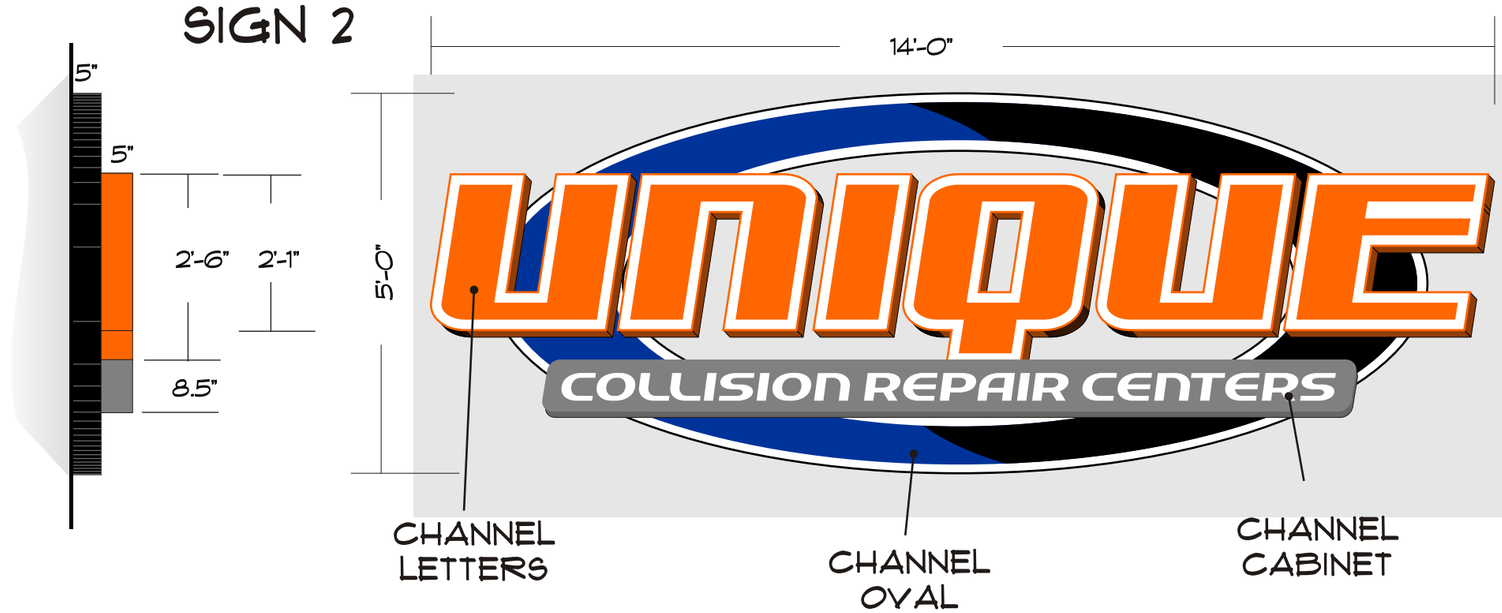

UNIQUE AUTO BODY
- SARATOGA SPRINGS -
SIGN PLAN

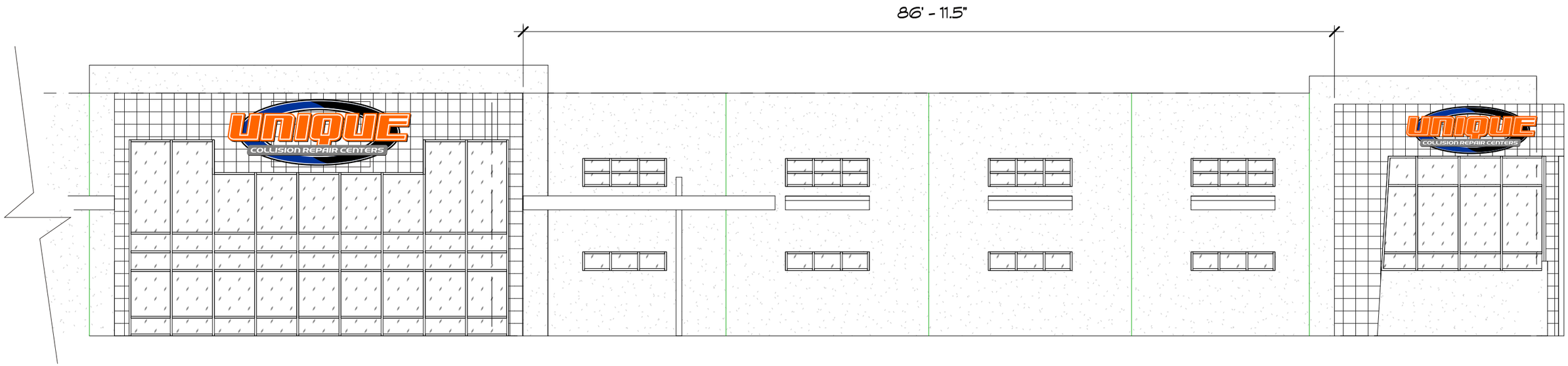

ELEVATION DETAIL (SECTION)

SCALE 3/32" = 1'

CHANNEL LETTER DETAIL

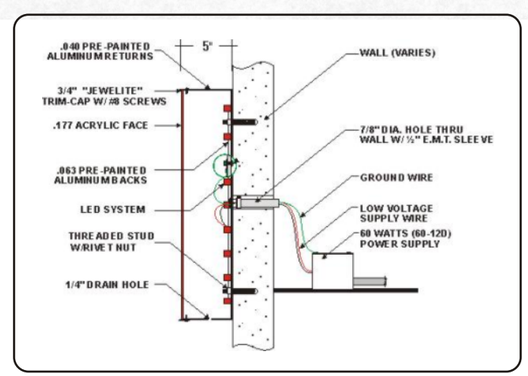

UNIQUE AUTO BODY
- SARATOGA SPRINGS -
SIGN PLAN

"We are setting High Standards for Customer Satisfaction in the Auto Body Industry."

Detailed Statement:

Unique Auto Body was established in 1983 by the Weller family. Over 30 years later it is still family owned and operated and is now one of Utah's most premier collision repair facilities. We proudly state that we have been nationally recognized for our outstanding quality service. To achieve our high levels of customer satisfaction we use cutting edge equipment, top of the line eco-friendly paint materials and a highly trained, knowledgeable and industry certified staff.

Our state- of- the- art facilities are conveniently located in the center and the south west areas of the Salt Lake Valley making it easily accessible for customers throughout the entire greater Salt Lake area. The shops are known for their unique and aesthetically pleasing design. In fact, we take great pride in hearing our customers and guests comment on how impressed they are with our facilities.

It is with great excitement and anticipation that we look forward to adding our newest location located in Saratoga Springs. This new location will follow the same design and work flow enjoyed by our customers in the Salt Lake area.

Some of the benefits and services that will be offered from this location will be:

- Lifetime written warranty on body and paint work
- High tech down draft spray booths
- Duplicate manufacturer OEM finish
- "Going Green" with cutting edge water borne spray systems that are eco-friendly
- State-of-the-art equipment and laser measured frame racks allow us to return any vehicle to pre-collision condition
- Towing services
- Car rentals available
- Free pick-up and delivery / shuttle service
- Highly trained and certified staff and technicians
- Fastest high quality repairs in the industry
- Ease of repair process and billing through insurance Direct Repair Programs
- Clean and inviting building and office.
- Highest quality service in the industry

It is our intent to use our new facility located at 2148 N. Stagecoach Drive Saratoga Springs, UT for these purposes and look forward to a lasting and mutually beneficial partnership with the city of Saratoga Springs and its residents.

Please feel free to contact me for any other information you may need.

Regards,

Jeremy Weller

Unique Auto Body

801-302-0966

Jeremy@uniqueautobdy.com

City of Saratoga Springs
Planning Commission Meeting
May 22, 2014
Regular Session held at the City of Saratoga Springs City Offices
1307 North Commerce Drive, Suite 200, Saratoga Springs, Utah 84045

Draft Planning Commission Minutes

Present:
Commission Members: Jeff, Cochran, Jarred Henline, Kirk Wilkins, Sandra Steele, Eric Reese, Hayden Williamson
Staff: Lori Yates, Sarah Carroll, Nicolette Fike, Scott Langford
Others: James Jones, Mike Helmantoler, Aric Jensen, Tami Buckland, Chris Raver, Joe Hitzeman, Cornell Brown, Joel Darby, Satt Jenson, Miranda Jensen, Ryan Bybee, Arnold Hansen, Paul Watson, Jeff Nielsen, Jeremy Weller, Jim Wherler, Jennifer Hansen, Steve Sowby
Excused: Kara North

Call to Order - 6:36 p.m. by Eric Reese, Vice Chairman
Pledge of Allegiance - led by Hayden Williamson
Roll Call - Quorum was present

Input was called for from the Commission, no comments were given at this time.

Public Input Open by Eric Reese

Michael Helmantoler -, wanted to know who was responsible for upkeep on the area on the north side of Jordan Ridge Blvd. which is currently full of weeds. Also, on Riverbend, are there plans for water access? Sarah Carroll – replied that Jordan Ridge Development was responsible, and no there are not plans for water access. She would speak with him later on his questions outside of meeting.

Meeting turned over to Commission Chair Jeff Cochran.
Public Input Closed by Jeff Cochran

4. Public Hearing: Preliminary Plat for Lake Cove located at 3168 South Spinnaker Drive, Ron Johnston, applicant.
CONTINUED TO JUNE 12, 2014 PLANNING COMMISSION MEETING.

5. Public Hearing: Preliminary Plat for Hillcrest Condominiums Phase 3 located at 1900 North Crest Road, Nate Hutchinson, Flagship Homes, applicant.
CONTINUED TO JUNE 12, 2014 PLANNING COMMISSION MEETING.

6. Public Hearing: Site Plan and Conditional Use for Platinum Car Wash located at 1413 N West Commerce Drive, Gary Hadfield, applicant.
CONTINUED TO JUNE 12, 2014 PLANNING COMMISSION MEETING.

Motion by Sandra Steel to continue the Public Hearing: Preliminary Plat for Lake Cove located at 3168 South Spinnaker Drive, And Preliminary Plat for Hillcrest Condominiums Phase 3 located at 1900 North Crest, And the Site Plan and Conditional Use for Platinum Car Wash located at 1413 N West Commerce Drive, to the meeting of June 12, 2014. Second by Kirk Wilkins. Aye: Sandra Steele, Hayden Williamson, Kirk Wilkins, Jarred Henline, Eric Reese and Jeff Cochran. Motion passed unanimously.

7. Public Hearing: Master Development Agreement Extension and Revision for the Riverbend development located at approximately 900 North Redwood Road, Knowlton General, applicant.

Sarah Carroll – presented the item. Applicants are requesting to renew and extend and modify the existing MDA. Applicant would like to request the same road layout to utilize existing lines and to continue the same road widths as already started. Staff recommends they keep basketball half court, 5 areas with concrete pad and picnic table 16'x20' pavilion and one medium size playground. She made note of the wetland area and what would be needed to comply to build there. She reviewed Staff findings and conditions. And recommended adding a condition related to the amenities.

Aric Jensen, for applicant – they are pleased with what staff has presented and are willing to move forward quickly when approved.

Public Input Open by Jeff Cochran

Cornell Brown, HOA president for Riverbend – noted that in these developments the amenities seem to get lost in the modifications of the plats. Parking with the smaller streets is becoming a problem and safety issue. Kids are playing in the streets because parks have not been developed yet. Breaking up into smaller lots is advantageous for them.

Tami Buckland – Parking has become a significant issue, with the size of the units, many units have multiple cars (passed a picture of parking to commission) and not enough parking. Emergency vehicles cannot access units and it's unsafe for children. She has witnessed accidents almost happening because of vehicles parked in odd places. She recommends adding several more parking spaces in the new plan. The park they currently have was paid for by HOA and not developer. It's not designed for older children, but they use it and it gets destroyed.
Sarah Carroll – on Riverside drive it is a public road and city does not recommend any stalls that back on to it. Staff did recommend amenities for the new phase.

Jennifer Hansen – has a problem with one medium size park in the proposed amenities for children with that large of an age gap. She feels it is important to have a tot lot. What they have is not enough for the little children, the bigger kids are taking over and it's a dangerous condition. The park is also in horrible repair. And she also agrees they need more parking.

Joe Hitzeman – also feels there is not enough parking, people parking in field and out of stalls. He also mentioned unsafe conditions for kids with them playing in the street because of no amenities for them to use. Feels he was promised things when he moved in and nothing has been built yet.

Arnold Hansen – echo's what others have said about amenities and parking. He would like the developer to make more curb appeal on Redwood Road. He feels the complex is nice but entrance doesn't reflect well on development or city.

Chris River – seconds what everyone else has said. Parking has been a huge problem, it's a safety hazard for kids in street, and parking in muddy field.

Public Input Closed by Jeff Cochran

Sandra Steele – has no problems with setbacks as long as driveways are a minimum of 20ft. She has issues with leaving the road the way the project started out, she feels a modified curb would work better and is concerned about undulation of driveways.
Jeff Cochran – said it would be difficult to put a high back curb and gutter in with this space.

Scott Langford – showed the new plan was a modified curb and gutter. Their intent is to continue the existing cross section.
Sarah Carroll – indicated they could have the developer change the detail.
Sandra Steele – is concerned about the parking, she would ask the developer if they could please add more parking and disperse it throughout development. Asked on garage size –
Aric Jensen - said old phase is one stall and new phase is two.
Sandra Steele - asked about engineer's requests being met, specifically with roads and turn-arounds meeting all standards. (Item 6 in engineer report.)
Staff and Developer - replied that the design today meets what engineer has asked.
Sarah Carroll – indicated that it would be fair to add that sentence, that the existing cross-section could be continued.
Sandra Steele – agreed that amenities were a must. She would leave it up to staff to work with developer as to what kind of playground is required.

Hayden Williamson – asked which phase Riverside drive would be installed
Sarah Carroll – answered that it would be all three phases, they all have portions.
Hayden Williamson – in doing that in all 3 phases will it still meet fire code requirements?
Sarah Carroll – replied that it would be reviewed with each plat as they would need to provide turn-arounds.
Hayden Williamson – feels that adding a condition concerning this issue of Riverside drive would be good. Feels developer should sit down with residences to see what they need and bring it back to the city for review.

Eric Reese – encourages adding parking where possible and having HOA work with developer on amenities. He feels curb appeal will be addressed and that it should look nice coming into the development.

Kirk Wilkins – directed questions to staff on the option of city if the MDA application expires.
Sarah Carroll – if MDA expires they don't have a way to continue similar setbacks and any new plan would have to meet current city codes.
Kirk Wilkins – said the setbacks weren't a concern. He doesn't have problems with road extension. Would echo comments earlier on amenities that developer work with city and create amenities that will help solve problems. Question on why the roads were 2' narrower as noted in the packet.
Sarah Carroll – explained that recently the City Council adopted new road cross sections that are 2 feet wider. If they increase current plat to current code then they can't have 20' drives.
Kirk Wilkins – question on the unit in the flood plain, if the wetland is replaced where would it be?
Sarah Carroll – replied that the developer would have to come up with a plan to replace it and if it can't be done then the developer would not be able to build lots in that area in later phases.
Scott Langford – they may have an option to buy areas outside at a ratio of 7 to 1 that is expensive and a long process.

Jarred Henline – does see the concerns with parking and amenities but this is really a review for an extension and sees the issues coming up later at preliminary plat. He is not sure how to put those conditions in without being specific. He asked why 7 years on the extension? He feels it should be shorter.
Sarah Carroll – something in code about the time allowed, 7-10 years but you could approve a shorter time frame.
Jarred Henline – he does understand the residences concerns and feels there are options to work out with developer, but our focus today is if we are going to continue this extension or not and for how long and then perhaps other problems like park and parking may come after that.

Jeff Cochran – thanked public for their comments. The Master Development Agreement is in place for 7 years and things change, if we give them a long time it may not be consistent with current city standards. He concurs with Mr. Henline. He asked for clarification on item in the report about utility placements currently laid out in future roads and if they really needed to be moved.

Sarah Carroll – if they didn't move them it would fall under driveways or things like that. The city engineer prefers they are in right of ways.
Jeff Cochran – feels they could meet the new standards and keep utilities in roadways. He asked developer to address that.
Aric Jensen – they did a layout that took into account all current standards. When they did that the utilities were falling under drive pads and things like that. They filed a variance application with new layout. At that time Kimber did not prefer asking for the variance and asked them to come with MDA extension instead.
Jeff Cochran – are there conditions they could put on MDA?
Sarah Carroll – we are giving up something by extending setbacks; things are given to them so we can ask for things from them. It would have to be run by the City Attorney.
Aric Jensen – does not disagree with what neighbors have said. He is new to the firm, has identified places they can add some parking stalls. With the wetland issues they are aware of them and the process they would need to go through. In terms of landscaping out front they have already contacted their landscaper to work on it. He feels they can address all the issues brought forward and doesn't have a problem going to City Council with these conditions.

Jeff Cochran – reviewed thoughts from council on the roadway being completed early, amenities and working with neighborhood HOA, roadway widths and keeping them the same.
Sandra Steele – is concerned with length of time for extension. When they grant extensions how long do they let MDA's go? Do we continue to give extensions and then things will never get up to city standard.
Eric Reese – suggested adding playground issue, language to allow HOA to suggest something.
Kirk Wilkins – perhaps add ratios concerning parking.
Hayden Williamson – concerned with adding ratios, but we could put something in to address additional parking.
Jarred Henline – should we table this and have the City Attorney look at it first and have developer bring it up to our standards first before we send it on to city council. He is not comfortable with suggesting items on parking or amenities and come up with good wording on the fly. We shouldn't give up something without getting what we want. He doesn't think legally we could come up with a good solution tonight.
Hayden Williamson – if we tabled this could we hear it before it expires in June?
Scott Langford - indicated that the City Council will get a copy of the planning recommendations and it would be hard to continue it longer with deadlines. We could tighten it with developer before we go to City Council.
Sandra Steele - could we extend it for a few months to be able to continue more discussions?
Sarah Carroll – we have extended other MDA's while they worked on revising it. If they decide to table or continue it they could still take it to City Council to get a short extension while they work it out.
Aric Jensen – said when we have a fixed date the contract expires on that date. If the City Council takes action on it to extend it than they are comfortable that the Council has taken action but contract law in the state is pretty explicit, if it is tabled and no action is taken then their contract will run out. His concern is that if it's tabled and council doesn't hear it and take action then they are back to variance process. He is good with Commission adding all the recommendations to take to Council.

Motion by Hayden Williamson to forward a positive recommendation to the City Council for the Riverbend MDA extension and modification with Findings and Conditions found in the staff report with language added that the developer work with the city and current residents to address concerns regarding parking, to address concerns regarding amenities, and to work with the city with concerns regarding the timing for Riverside drive. Seconded by Eric Reese.

Jeff Cochran – asked a question on the motion - would Mr. Williamson consider that applicant also work with city staff to consider putting the current roadway width in.
Hayden Williamson – he would not, he is in favor of keeping the roadway consistent with the project.

Aye: Sandra Steele, Hayden Williamson, Eric Reese, Kirk Wilkins. Nay: Jarred Henline and Jeff Cochran.

8. Concept Plan for Sierra Estates Senior Housing located at 350 West 400 North, Ross Welch, applicant.

Sarah Carroll – presented the plan and reviewed staff recommendations.

Steve Sowby, for Applicant – appreciated the opportunity to come back with improved plan. They have implemented all suggestions previously given by commission. They ask for approval tonight and agree with all staff recommendations.

Sandra Steele – for van accessible spot for employee parking, suggests applicant make sure access space is on passenger side. She asked previously that they comply with state statutes and that the statutes changed this past April.

Hayden Williamson - likes the new plan and parking.

Eric Reese – likes the plan.

Kirk Wilkins – looks like they have done everything asked, good job.

Jarred Henline – thinks it looks good.

Jeff Cochran – indicated his thanks for listening to the commission and coming back with improved plan.

9. Public Hearing: Preliminary Plat for North Saratoga Center Plat A located at 2175 North Stagecoach Drive, Ryan Bybee, applicant.
10. Public Hearing: Site Plan and Conditional Use permit for Unique Autobody located at 2175 North Stagecoach Drive, Andrew Bollschweiler, applicant.

Jeff Cochran asked that we listen to items 9. and 10. Together and hear public comment together for them.

Scott Langford – presented the items.

9. Applicant has applied for preliminary and final plat approval as it goes to City Council. This is the only office/warehouse zone in the city.
10. Showed overlays and touched on unique needs of business. Applicant raised a question of dumpster location, they feel best spot would be enclosed within building and have planned for that. As you approve site plan it includes signage, that won't be a separate item. No additional signage is requested for storage unit.

Ryan Bybee, Applicant – one comment on road for fire access, they had discussion about road extension of Stage Coach Blvd. that would be developed in future, he suggested for access that perhaps building it now would be a better option than making a temporary turn-around.

Public Input Opened by Jeff Cochran
No public input at this time.
Public Input Closed by Jeff Cochran

Jarred Henline – he is good with item 9. On 10, if they change their minds on the garbage cans and decide they need more what would happen.
Scott Langford – they would have to comply with code and provide enclosure for that.

Jarred Henline – on the sign, they need to pick one of the options.

Kirk Wilkins – wanted to know what style of fence on west side.
Scott Langford – applicant has submitted plan for 6' rod iron style.
Kirk Wilkins –has a concern that cars would be parked there that could be seen from main road.
James Jones, Architect – the building is larger to have cars parked inside, so they should not be parked outside at all.
Kirk Wilkins – expressed concern with trash inside and possibly containing bio hazards and other potential hazards.
Scott Langford – this is a conditional use permit; Commission could put an additional condition to make sure cars were not stored in NW portion of lot.
Kirk Wilkins – would like to add a condition that no broken down cars are parked along North and West side. Also pick one of the sign options.

Eric Reese – doesn't have any concerns, but wanted more detail on improving road for fire access.
Ryan Bybee – showed where it was on the overlay and the problems with a temporary turn.
James Jones – said the road is already dedicated so they have talked with staff to see what was needed to get it in this year.
Eric Reese – would support condition of no cars being worked on stored outside. Would let applicant do what they have planned with dumpsters.

Hayden Williamson – likes the look of it. He would support condition of no cars on NW sides.
Jeremy Weller – said no cars would be out front and exposed, adding there are no doors on front of building.

Sandra Steele – concern with parking, there are 4 spaces provided for storage units, is there an onsite manager?
Scott Langford – yes there is an onsite manager and they do live there. Manager indicated that parking was never an issue. Extra cars usually park on Stagecoach or further in near units.
Sandra Steele – thinks there should be separate parking for manager and that there should be a Van Accessible space that meets standards in width. She suggested a condition about if additional garbage containers would be needed that they install surrounds as in code.

Jeff Cochran – reviewed comments for item 9. Handicap parking spot. Item 10. Condition that no parking on N. and W. side and discussion on signs and discussion on trash container
Sandra Steele – feels more parking should be added for item 9.
Jarred Henline – also feels more parking would be good.
Ryan Bybee – noted that there is space inside the facility for manager to park if he needs to use it.

Motion by Jarred Henline to recommend approval to the City Council of the North Saratoga Center Plat A Preliminary Plat, located at approximately 2175 North Redwood Road, based on the findings and conditions in the report and add two additional conditions that they come into compliance with statutory code regarding handicap parking, and maybe meet in the middle that during business hours no employee can park in customer spaces. Second by Sandra Steele. Aye: Sandra Steele, Kirk Wilkins, Jarred Henline, Eric Reese and Jeff Cochran. Nay: Hayden Williamson.

> Hayden Williamson – voted nay because he is uncomfortable with attaching stipulations regarding existing parking based on approval to add more units. They know their business better than we do. He feels it's not the proper role of government to force them to have adequate customer parking. The handicap one does have a little weight with him but tends to go with the spirit of the law on that.

Motion (withdrawn) by Jarred Henline that Based upon the evidence and explanations received today, (I move) that the Planning Commission forward a positive recommendation to the City Council to approve the

Amended Site Plan for the North Saratoga Center Office Warehouse Development (Phase 2B) on property located at approximately 2148 North Stagecoach Drive, with the findings and conditions found in the report and also an added condition that cars on the property to be serviced should be parked within the structure and not on the outside. Second by Kirk Wilkins

Hayden Williamson – understood on the stipulation on parking, that cars being serviced would be allowed to be parked on the east side.
Scott Langford – commented that it might be better to tie that condition to the use plan, not on the site plan.
Jarred Henline - Motion withdrawn without objection.

Motion by Jarred Henline: Based upon the evidence and explanations received today, I move that the Planning Commission forward a positive recommendation to the City Council to approve the Amended Site Plan for the North Saratoga Center Office Warehouse Development (Phase 2B) on property located at approximately 2148 North Stagecoach Drive, with the findings and conditions in the report. Second by Eric Reese. Aye: Sandra Steele, Kirk Wilkins, Eric Reese, Jarred Henline and Jeff Cochran, Hayden Williamson. Motion passed unanimously.

Jeff Cochran – notes items discussed for use plan of cars not on North or West, signage to choose one, and trash containers.

Motion by Jarred Henline Based upon the evidence and explanations received today, I move that the Planning Commission forward a positive recommendation to the City Council to approve a Conditional Use Permit to allow "Automotive Repair, major" on the west 1.66 acres of property located within the North Saratoga Center Office Warehouse development (Phase 2B), located at approximately 2148 North Stagecoach Drive, with the findings and conditions found in the report and added conditions being that cars on the property being serviced should be parked within the structure or on the East side only, and that they may only have one sign not two. Second by Eric Reese.

Hayden Williamson – on the parking would Mr. Henline be willing to substitute to say "cars cannot be parked outside of the fenced area," because they have 5 stalls on the North side of the building that are behind fenced area and it would be protected by fence?
Jarred Henline – answered no, he is good the way it was stated.

Aye: Sandra Steele, Kirk Wilkins, Jarred Henline and Jeff Cochran, Eric Reese, Hayden Williamson. Motion passed unanimously.

11. Public Hearing: Rezone and Concept Plan for Beacon Point located 4400 South 100 West, Paul Watson, applicant.

Scott Langford – presented this item and staff findings and recommendations. There are some questions on culinary and secondary water in the area and fire protection zone. Applicant would be required to submit a fire protection plan and assurance that homes would be protected. Chief Campbell indicated an additional study would need to be made.

Paul Watson, Applicant – they will work out issues with water with staff; they know where the problems are and feel it will be ok. They agree with staff recommendations. They would not like to bring collector all the way down to Redwood Road. UDOT is ok with the accesses.

Public Input Open by Jeff Cochran

Scott Jensen – water pressure is definitely a concern. Also with retention ponds, there is an existing ditch that helps prevent flooding, will that be maintained?
Scott Langford – said in phase one they will be diverting water into retention ponds.
Paul Watson – with 100 flood plain two basins are needed, and they are putting them in phase one.
Scott Jensen – with added access will Redwood Road be adding lanes, as in a turn lane?
Scott Langford – they would be required to improve the frontage.
Scott Jensen – wanted to make sure lot sizes were consistent with current neighborhood.
Scott Langford – replied the average lot size was around 10,000 ft.

Miranda Jensen – worried about traffic coming in during first phase through the existing neighborhood because of the traffic currently there. There are children playing in the street and would there be construction access.
Jeff Cochran – construction access is required that are not through the neighborhood.
Miranda Jensen – wanted to know if all new traffic for residences was going to be routed through current roads.
Scott Langford - they would use existing roads for phase one and then phase two would complete the access to Redwood Road.

Public Input Closed by Jeff Cochran
Jarred Henline – access on open space, some of it is steep hill?
Scott Langford - yes they will need to specify sensitive land on the plat, only 50% is allowed by code for open space.
Jarred Henline – asked Paul to address water issues.
Paul Watson – later phases will bring new pipelines and they feel it will have sufficient pressure. They will make sure existing homes have pressure
Scott Langford - staff leaning towards rezone being conditioned upon preliminary plat approval, and those issues being resolved.

Kirk Wilkins – asked about the elevation difference between some lots and once the detention basin is full and water follows little river, he is concerned the houses would be impacted.
Paul Watson– reviewed different elevations, and said the channel is about 12 feet wide and 8' deep. Models have been done and engineering, it's sized to handle the drainage.
Kirk Wilkins – would suggest that there isn't a rezone without conditions. He agrees corner lots need to be increased in size to meet code. He is still concerned with water pressure.

Eric Reese – likes the trail system and would echo what others have said about the MDA.

Hayden Williamson – also concerned about 3 lots backing on to collectors especially about the one close to Redwood Road.
Paul Watson – we could put a restriction on plat that forces a turn on the driveway.
Hayden Williamson – Concerned about fire access during phase1 before phase with main access is built. Could temporary emergency access be put in place?
Paul Watson – replied that he would have to work it out with UDOT.
Hayden Williamson – he would like to see that added as a note. He would like to see approval based upon recording of preliminary plat.

Sandra Steele – this is the last R2 in the city. She is concerned with fire issue and defensible area, and upkeep of defensible area. She is concerned with water pressure issues. She doesn't like 60 lots in phase 1 all driving through the current neighborhood. She feels it's too premature to come to commission tonight and would not support a rezone now.

Jeff Cochran – is struggling with the R4 zone, thinks R3 may be more acceptable within the city. He is a little concerned with the collector road. He thinks water issues could be worked out in time.
Paul Linford– pointed out that 100 ft. south the area is zoned between R10 and R20 and feels the R4 zone would help with that transition from this area to that.

Jarred Henline – feels added traffic in existing neighborhood for phase 1 might be too much.
Eric Reese – asked staff if the traffic was a valid concern?
Scott Langford – referred to engineers report and his expertise.
Hayden Williamson – on a condition to tie into Redwood road, would we make it a condition of rezone or on a condition for final plat approval.
Scott Langford – thought it would benefit everyone best if it was articulated it in a condition.

Motion made by Hayden Williamson, Based upon the evidence and explanations received today, I move that the Planning Commission forward a positive recommendation to the City Council to approve the rezoning of approximately 63.64 acres of property as shown in Exhibit 2 and generally located at 4300 South Redwood Road from the R-2 to the R-4 zone, with the findings and conditions listed in the staff report, with the additional conditions that rezone does not happen until "final" plat is recorded, and that collector road to Redwood Road is included in phase one. Second by Eric Reese.

Eric Reese – a MDA had been talked about?
Scott Langford – that would be the third option in staff report, condition in report for this motion is that it doesn't take effect until preliminary plat. That is so there is some entitlement at that point and developer could post bonds and start construction.
Jeff Cochran – believes the question is would Mr. Williamson accept the MDA option?
Hayden Williamson – his goal was to make sure that the city is able to determine the final product and not just rezoning it.
Scott Langford - recommends second option listed in staff report on option 2, conditions on page 6.
Hayden Williamson – does not accept MDA as part of his motion.

Nay: Sandra Steele, Kirk Wilkins, Jarred Henline and Jeff Cochran, Eric Reese, Hayden Williamson. Motion **failed** unanimously.

Motion was made by Hayden Williamson that: Based upon the evidence and explanations received today, I move that the Planning Commission forward a positive recommendation to the City Council to approve the rezone of approximately 63.64 acres of property as shown in Exhibit 2 and generally located at 4300 South Redwood Road from the R-2 to the R-4 zone, with the findings and conditions listed below in the staff report, specifically pointing out That the rezone shall take effect after the Applicant obtains Preliminary Plat approval. And the Preliminary Plat shall be substantially consistent with the attached Concept Plan. And that the primary access to Redwood Road be connected in phase one. Second by Eric Reese Aye: Kirk Wilkins, Hayden Williamson, Eric Reese. Nays: Sandra Steele, Jarred Henline, Jeff Cochran .

At 9:25p.m. a break was taken by Commission.
Meeting resumed at 9:31p.m.

12. Revision to the City of Saratoga Springs Land Development Code. (Section 19.05—Temporary Uses).
Continued discussion from May 08, 2014 Planning Commission, possible recommendation.

Scott Langford – reviewed the revision and discussion at last meeting. Revisions included removal of the parking requirement for all TUP's, replace with a requirement for approval of business within 300'. Added garbage standards. Creation of a separate section for mobile food vendors and incorporating additional clarifying standards such as duration and separation from residential areas. Prohibitions on operation as a

drive-through, prohibiting in park strips, and other standards. Reduction of the bond requirements to $250 on private property and $500 on public property, and creating an allowance for an annual bond for mobile food vendors.

Jarred Henline – numbering on pages 7 and 8 needs to be fixed. In paragraph 3a on page 8 says it has to be hosted by brick and mortar business, he would add that maybe they could be at a park "or in a public place, permission by the city." He feels the bond is still high but likes that they can choose a yearly option.
Eric Reese – what exempts a kid going out to the curb, like a lemonade stand.
Scott Langford – indicated most codes they had looked at were silent about the issue.
Hayden Williamson – thought they had discussed some wording about if on a private property it would be exempt.
Jarred Henline – recalled the discussion that they just didn't apply with this code, there is nothing that prevents them from doing so with this code.
Hayden Williamson – he thought they had talked about on the bond requirement that if they were in good standing that they could have that reduced.
Jeff Cochran – likes Commissioner Henline's thought that they have to be hosted by brick and mortar or a public place in the city.
Sandra Steele – doesn't think the city would allow it at any other time than civic events.
Hayden Williamson - if required to be hosted by brick and mortar only then why have a public property bond?
Sandra Steele - believes that fee would be for civic event times to clean up the park.
Hayden Williamson – the problem with requiring only brick and mortar business to invite or host the vendors is that it doesn't make sense for civic events like the splash?
Sandra Steele – then thinks there should be some phrasing that they would be allowed to go to public places during city events.
Jarred Henline – doesn't think the city should say to not do something (like allowing vendors at a public location) when the residences wanted it. Should let free market reign
Jeff Cochran – currently how it is written they cannot go to park, or public place for any event.
Kirk Wilkins – he has heard people say our city is hard to do business with, too many restrictions. He feels we should make changes to make it easier to deal with. Make easier restrictions.
Hayden Williamson – on second item 3b, he can see situation where they could be there longer than 8 hours and suggests allowing them to be here longer.
Jarred Henline – would agree to that.
Sandra Steele – noted that at another meeting it was set up for 12 hours a day, and others said no, only 8 hours. We need to move forward with this tonight, because there are other items waiting on this down the pipeline.

Motion by Jarred Henline to forward a positive recommendation to the City Council for the proposed amendments to Section 19.05 with the Findings and Conditions found in the report: with the added conditions: no. 1, that numbering from the two subparagraph 3's be corrected; That subparagraph 3a on page 8 be changed to also include (A mobile food vendor shall be permitted only when hosted by an existing brick-and-mortar business) "or upon public property with permission from the city." ; 3b, mobile food vendors shall not be parked for more than 8 hours a day in any location without first being given express permission from the city; And paragraph 10, the bond paragraph be changed to that after 6 months of good behavior the bond be reduced by half for those vendors who have been found to be in compliance to code. Second Hayden Williamson. Aye: Sandra Steele, Kirk Wilkins, Jarred Henline and Jeff Cochran, Eric Reese, Hayden Williamson. Motion passed unanimously.

13. Approval of Reports of Action

2 reports to act on

Riverbend and Temporary uses.

Scott confirmed recommendations.

Motion by Hayden to approve report of action on Master Development Agreement and Revision for the Riverbend development located at approximately 900 North and Redwood. Second by Sandra Steele. Aye: Sandra Steele, Kirk Wilkins, Jarred Henline and Jeff Cochran, Eric Reese, Hayden Williamson. Motion passed unanimously.

Motion by Hayden Williamson to approve the plan of action for the revisions to the City of Saratoga Springs Land Development Code, section 19.05 Temporary Uses. Second by Kirk Wilkins. Aye: Sandra Steele, Kirk Wilkins, Jarred Henline and Jeff Cochran, Eric Reese, Hayden Williamson. Motion passed unanimously.

14. Approval of Minutes:

1. March 13, 2014.

Motion by Eric Reese to approve minutes from March 13, 2014. Second by Kirk Williams. Aye: Sandra Steele, Kirk Wilkins, Jarred Henline and Jeff Cochran, Eric Reese, Hayden Williamson. Motion passed unanimously.

15. Commission Comments – no comments given at this time

16. Director's Report

Scott Langford – indicated that the next meeting will be a full agenda. Reported on items that had been forwarded to City Council.

Meeting adjourned by Jeff Cochran

Adjourn 10:05 pm

City Council
Staff Report

Author: Melissa Grygla, Library Director
Subject: Library Board Members
Date: June 9, 2014
Type of Item: Resolution

Summary Recommendations: The City Council should appoint Chris Porter to fill a recently vacated position on the Library Board.

Description:

A. Topic: Library Board Members Appointment

B. Background: Matthew Barney term on the Library Board will be ending on June 30, 2014. Katie Leavitt has been nominated by the library board to the empty seat. Her term would expire on June 30, 2017.

C. Analysis: Katie Leavitt has expressed interest in helping on the Library Board. During the initial formation of the library, Katie served on the board as the board secretary. She has expressed an interest in serving again and will be able to fill a three year term. I believe that to help the Library Board maintain the quorum necessary to hold meetings and vote, it would be prudent to appoint the specified individual to the Library Board.

D. Department Review: City Manager, Library

Alternatives:

A. Approve the Request: Staff recommends that the City Council approve the appointment of Katie Leavitt to a term ending June 30, 2017.

B. Deny the Request: The City Council could deny the request and not approve the appointment of these board members. We would then have to locate, recommend, and evaluate other possible candidates who would like to fill the positions.

C. Continue the Item: The City Council could continue the request until a later date and time. The result being that the Library Board would not always have a sufficient number of members present to complete the necessary quorum.

Recommendation: Staff recommends the approval of the attached Resolution.

RESOLUTION NO. R14-31 (6-17-14)

A RESOLUTION APPOINTING A MEMBER TO THE LIBRARY ADVISORY BOARD AND ESTABLISHING AN EFFECTIVE DATE.

WHEREAS, the City Council of the City of Saratoga Springs has established a Library Advisory Board; and

WHEREAS, the City Council has the authority and responsibility to appoint and remove members of the Library Advisory Board; and

WHEREAS, Matthew Barney's term on the Library Advisory Board ends on June 30, 2014; and

WHEREAS, the City Council wishes to appoint Katie Leavitt to the Library Board to serve as Matthew Barney's replacement and finds that such appointment furthers the public health, safety and welfare.

NOW, THEREFORE BE IT RESOLVED by the Governing Body of the City of Saratoga Springs that the following person is hereby appointed to the Library Advisory Board as outlined herein:

Board Member	Term
Katie Leavitt	July 1, 2014 to June 30, 2017

This resolution shall become effective immediately upon its passage.

APPROVED this 17th day of June, 2014 by the Governing Body of the City of Saratoga Springs.

_____ _____

Mayor, Jim Miller Lori Yates, City Recorder

CITY OF SARATOGA SPRINGS
CITY COUNCIL MEETING

Tuesday, March 25, 2014
Meeting held at the City of Saratoga Springs City Offices
1307 North Commerce Drive, Suite 200, Saratoga Springs, Utah 84045

DRAFT CITY COUNCIL MINUTES

WORK SESSION-Commencing at 6:07 p.m.

Present:
Council Members: Mayor Miller, Councilman Willden, Councilwoman Baertsch, Councilwoman Call, Councilman McOmber and Councilman Poduska
Staff: Lori Yates, Mark Christensen, Spencer Kyle, Kimber Gabryszak, Sarah Carroll, Chief Jess Campbell, Mark Edwards, Owen Jackson, Jeremy Lapin, Kevin Thurman, Melissa Grygla
Others: Chris Porter, Karalyn Becraft, Barbara Poduska, Ryan Poduska

1. Discussion of future agenda items.

The Council discussed and clarified with staff the Sierra Estates Master Development Amendment, along with Sierra Estates storm drain reimbursement agreement.
Council briefly discussed the joint federal aid agreement for the Lakeshore trail.

2. Library fees and fines.

Melissa Grygla the library is seeking authorization to collect overdue fines and fees in a form of donations from April 7th through April 19th. The library has over $5,000 in outstanding fees and fines that haven't been collected.
Councilwoman Baertsch questioned the amount of dues to be forgiven for some of the books stating that she wasn't sure a paperback should be worth as much just because it was on the library's wanted list.
Councilwoman Baertsch and Councilwoman Call expressed concerns with proceeding this direction and felt that there might be better solution to collect these outstanding fines.

The majority of the Council was supportive of the concept and directed staff to consider Council comments and have a revised proposal reviewed and approved by the Library Board.

3. Council goal setting.

a. Discussion of strategic planning advisory council.

Owen Jackson indicated that several names have been submitted by the Council to potentially serve as members. Staff asked the Council to help facilitate the program.

b. Discussion of Fox Hollow Park Amphitheater.

Mark Edwards is before the Council asking them to give direction to staff to move forward on providing a concept plan for the Fox Hollow Park Amphitheater.
Council and staff discussed details of the park along with potential locations for additional future parks.

c. Discussion of a SAFER grant.

Chief Jess Campbell discussed the future narrating of the SAFER grant with the Council.
The Council agreed to allow Chief Campbell to move forward with the hiring process rather than wait the 90 days.

4. Reports.

The Council was unable to report on items due to limited time.

The Council adjourned to Policy Session at 7:08 p.m.

_____	_____
Date of Approval	**Lori Yates, Recorder**

CITY OF SARATOGA SPRINGS
CITY COUNCIL MEETING

Tuesday, March 25, 2014

Meeting held at the City of Saratoga Springs City Offices

1307 North Commerce Drive, Suite 200, Saratoga Springs, Utah 84045

***POLICY SESSION* -Commencing at 7:06 p.m.**

Present:
Council Members: Mayor Miller, Councilman Willden, Councilwoman Baertsch, Councilwoman Call, Councilman McOmber and Councilman Poduska
Staff: Lori Yates, Mark Christensen, Spencer Kyle, Kimber Gabryszak, Sarah Carroll, Chief Jess Campbell, Mark Edwards, Owen Jackson
Others: Karalyn Becraft, Ryan Poduska, Jennifer Klingonsmith, Barbara Poduska, James Deriea, William, Andrew, and Daniel Yates, Tina LeBaron, Aimee and Bret Walker, James Doolin, Aaron Evans, Alison Johnson, Jeni Bitter, Suzanne Werner, Robert Werner, Christie Eager, Travis Jordan, Devia Olsen, Lori Sims, Lisa and Matthew Morris, Matt Percy, Jake Smith, Dawson Balzotti, Noah Jordan, Dasan Rohner, Zachary Warren, Huey Kolowich, Eric Anderson, Adam Stout, Gayle Hutching, Joseph Sims, Faye Fackrell, Leil Fackrell, Blair Hutchings, Andrew Bargeron, Zach Warren, Michelle Warren, Paula Heaton, , Kelsey Dean, Benjamin Dean, Keveny Daley, Kris Holley, Maurie Pyle, Ashley Buhman, Kathy McGregor, Steve Larson, Janette Crump, Taylor Crump, Stephen Sowby, Henry Barlow, Mark Barlow, Chris Porter

Call to order by Mayor Miller.
Roll Call.
Invocation was given by Councilman McOmber.
Pledge of Allegiance was led by Jonah Phillips of Troop 1281.

Mayor Miller opened public input.

Karalyn Becraft quoted Kimber Gabryszak from an article as saying that PUDs had loopholes that inadvertently allowed developers to give small open spaces and gain higher densities. Ms. Becraft is concerned that the R4 and R5 allow for high densities and the developer doesn't have to give any open space in return. She is concerned with all of the changes that occurred on July 16, 2013. She spent considerable time trying to find information on lot sizes in R3 zones and finally spoke with Sarah and again took considerable time before finding the information. She would like to know the reasoning behind the change and asked that the rezone be tabled until this information is available.

Ben Dean expressed concern that public input from Planning Commission meetings isn't being shared with the City Council.

Mayor Miller closed public input.

Awards
Sergeant Eddie Christensen recognized Jason Ruch for his recent promotion to Corporal with the Saratoga Springs Police Department.

1. Consent Calendar:
- **a. Award of Bid for the City Wide Crack Seal project.**
- **b. Award of Contract for the Shoreline Wetland Cultural Resource Study.**
- **c. Award of Bid for the Loch Lomond pressure reducing valve project.**
- **d. Sierra Estates storm drain reimbursement agreement.**
- **e. Preliminary Plat for Stillwater Phase 6 located at 2700 South Stillwater Drive, Land Solutions Partner, applicant.**
- **f. Joint Federal Aid agreement between the City of Saratoga Springs and Utah Department of Transportation for Lakeshore Trail.**

Councilwoman Baertsch asked that a clarification be made on the Sierra Estates storm drain amount - $70,000 and not $75, 000. Also, in the Stillwater project, make sure the trail construction on the north trail is included.
Councilman McOmber clarified that we aren't taking federal aid for the Lakeshore Trail; this is local gas tax money coming back to the city.

Councilwoman Baertsch moved to approve the consent calendar with a. Award of Bid for the City Wide Crack Seal project to Top Job LLC for $71, 862, b. Award of Contract for the Shoreline Wetland Cultural Resource Study to SWCA Environmental Consultants, Inc. with alternates 1 and 2 for $79, 562, c. Award of Bid for the Loch Lomond pressure reducing valve project to Taurus Plumbing and Excavating Company for $82, 900, d. Sierra Estates storm drain reimbursement agreement for a lump sum of $70,000, e. Preliminary Plat for Stillwater Phase 6 to include the north trail construction. Councilman McOmber seconded. Aye: Councilman Willden, Councilwoman Baertsch, Councilman McOmber, Councilwoman Call, Councilman Poduska. MOTION PASSED.

2. Public Hearing: Real Estate transaction with Central Utah Water Conservancy District.

Jeremy Lapin this is property was initially set aside as a detention pond for water. Because of the road widening it isn't needed for a pond any more. The Central Utah Water Conservancy could use it; .605 acres.

Mayor Miller opened public input.
There was none.

Councilman Poduska moved that the public hearing be closed. Councilman McOmber seconded. Aye: Councilman Willden, Councilwoman Baertsch, Councilman McOmber, Councilwoman Call, Councilman Poduska. MOTION PASSED.

Council gave direction to staff for the real estate transaction.

3. Public Hearing: Rezone and Concept Plan for Talus Ridge located at approximately 550 North 800 West, Edge Homes, applicant.

a. Ordinance 14-4 (3-25-14): amending the City of Saratoga Springs official zoning map.

Sarah Carroll presented the rezone for Talus Ridge and the request for the change of zone.
Steve Maddox, applicant, said they have had two neighborhood meetings. He understands that the amenities aren't as popular but the ones that are being proposed will bring benefits in the future. The overall density is lower and the lot size is comparable with the surrounding subdivision. The concern is the rezone and the impact it may bring. Double fronted lots are of a concern. He feels that they have been flexible in seeking a solution and is asking for a small variance.

Mayor Miller opened the public hearing.

Aaron Evans asked about the canal: keeping it safe from the children and the trash created by the new residents.
Chris Porter noted that a large number of rezone requests have come in. He strongly encouraged an MDA with the proposed development.
Karalyn Becraft likes the plan. She pointed out that the developer has the intention of making the other 800 acres R-6 or higher. If allowed to make this project R-5, that makes it easier to increase the density on the 800 acres. She liked the idea of the northwest connection recommended by staff.
Paula Heaton noted that when they were forced to annex into the city in 2009, the agricultural rights were grandfathered in. As more homes are built and new owners move in, she would like to see that they are made aware of the agricultural use and are informed of the rights that will be next to them before they sign a contract.
Henry Barlow expressed the same concerns as addressed by Paula Heaton. His property is next to the proposed development. He suggested that the agricultural usage be noted on the plat. He expressed concerns with the types of fencing that would be allowed or required.
Kelsey Dean coordinated a petition with 140 signatures in opposition to the rezone. Many of the Sunrise Meadows residents moved to the area because of the open space and agricultural land around them. The applicant has been responsible with addressing our concerns. As the city continues to grow, they want to ensure a proper buffer between agricultural and new residential projects. They oppose higher density for Talus Ridge.
Margaret Pyle expressed concern with 800 West and 400 North needing to be widened and the lines need to be restriped with a more durable paint.

Mayor Miller closed the public hearing.

Steve Maddox disclosed that the agricultural use will be disclosed to buyers and recorded with the plat.
Sarah Carroll noted that the canal will be buried.
Steve Maddox is open to any fencing option that isn't chain link.

Mayor Miller appreciates the applicant holding a meeting with the residents. He noted that there were concerns about parking for the proposed park if it will be used for soccer.

Councilman Poduska said density is a concern with the residents but this is a lower density at R4 (2.5 homes per acre) than staying with R3 (3 homes per acre). The developer has made every effort to meet and work out difficulties. He doesn't see this as a proposal with higher density.
Councilman Willden likes the plan. He would keep the R3 and grant the variance.
Councilwoman Baertsch agreed that it's a great plan; she likes the variation in lot size, the additional amenities which allow for future planning. Her preference is to keep the R3. She would like to address the fencing issues and have an ag notice to be signed by future homeowners with the title.
Councilman McOmber appreciates the comments from residents. He would keep the R3 with the variance on frontage and 9000 sq. foot lots. Having the title include the ag use is the right way to go. He appreciates the open space and the location of the park.
Councilwoman Call said the R4 zoning is premature; concept plan is fine.

Councilwoman Call moved to deny Ordinance 14-4 (3-25-14): amending the City of Saratoga Springs official zoning map. Councilwoman Baertsch seconded. Aye: Councilman Willden, Councilwoman Baertsch, Councilman McOmber, Councilwoman Call, Councilman Poduska. MOTION PASSED.

4. Public Hearing: Rezone and Concept Plan for Heron Hills located at approximately 3250 South Redwood Road, Steve Larson, applicant.

a. Ordinance 14-5 (3-25-14): amending the City of Saratoga Springs official zoning map.

Sarah Carroll presented the rezone for Heron Hills along with the concept Plan. There are some options to discuss. The Planning Commission suggested a development agreement with the preliminary plat. There are 3 options for the location of the detention basin. A phasing plan was provided, but it didn't include the open space phasing.
Steve Larson, applicant, said that the open space fits the needs of the council and staff. He noted the value of the detention pond and the ability to use it to relocate wetlands. He stressed that the developer and city are working together. He suggested a meandering boardwalk through the wetlands.

Mayor Miller opened the Public Hearing.

Bret Walker understands the property will be developed. He is concerned with the need for another secondary access since Swainson Avenue is already being completed. He suggested making a cul-de-sac; add a security gate for emergency access only and not an entrance onto Redwood Road. No other community in Saratoga Springs that has entrances on Redwood Road has driveways that close to the entrance; this is a safety issue. He wondered why they never received notice of rezoning in 2013 or 2010. He suggested following the example of other cities and putting up large temporary signs by the area with the proposed zoning changes.
Ryan Poduska, on HOA board that borders Hawks Ranch, said the residents of Hawks Landing need the Swainson Road completion to Redwood.
Tina LeBaron doesn't agree with the rezone. She's concerned about neighbors that turn their property into rentals. She expressed concern about having a park next to a beach due to drowning hazards.
Mori Simms noted that this area would feed off of Wildlife Blvd. which comes out onto Redwood Road and is a dangerous intersection. We don't need more traffic trying to come off that road. She intends to have animals (horses, cows, pigs) and that needs to be dealt with. She said she doesn't believe anyone really wants to have a beach area; it doesn't look like a beach area.
Kathy McGregor lives near the proposed project. She currently has a well with water that is 106° coming out of the ground. They can't drink the water. She asked to be given an easement to be able to have city water. She would also like to request that the lots that will back to her property have uniform fencing provided by the developer or no fencing at all.
Joseph Simms is not in favor of the rezone. Redwood road is dangerous and narrow and is shared with cyclists. He wondered if there were plans for a bike trail.
Aimee Walker said that half of the development will be using Hawks Drive; it's a drastic curve and snow removal is minimal. The boat launch in Pelican Bay has a direct launch; the proposed launch in this plan is not direct so people will have to drive through the subdivision and there is no parking.

Mayor Miller closed the Public Hearing

Steve Larson said they had worked carefully and looked at the traffic issues. They don't own the road and have done what they can.
Mark Christensen said this will provide trail connectivity from the south end to the north end of the city and address the cyclist concerns.

Councilwoman Call this project has come a long way and is a great benefit to the community. The access onto Redwood Road will be addressed by UDOT because it's a state road. There is a need for another access into this development. Suggested that the street names be changed along with the name of the development, liked the previous development name "Heron Hills." Likes the look and use of the wetlands which will be a benefit for the community. Community docks is moving forward but however the

property owners will need to apply for those permits. Construction traffic is a concern through the neighborhood. Likes the proposed beach design. The Utah Lake Commission working to restore the ecosystem of the lake by removing the carp fish and phragmite. Snow removal will be a priority in this development. Recommended the developer work with adjacent property owner regarding fencing and water. She feels that the property doesn't need to be rezoned and keep at an R-3 zone. Likes the Concept Plan.

Councilman Poduska likes the concept plan. Utah Lake is one of the great aspects of Saratoga Springs. This development provides beach access and public access. Allowing 70 foot frontage removes the need for a zoning change. Redwood Road is a state road but the development in the area is going to require UDOT to expand the road. Option 3 with a split detention pond is very good. He supported having the developer work with Kathy McGregor for a uniform fence.

Councilman McOmber said the HOA should have uniform fencing standards. He said he would like to find a solution for water for Kathy McGregor that would also benefit other lots. He asked Jeremy Lapin to work on this. He said there is beach parking. He really likes the concepts. The name of the development needs to be changed along with street names for public safety reasons. The driveways backing out onto the roads for those particular lots near Redwood Road are a safety concern.

Councilwoman Baertsch said the original development name of " heron Hills" is good. The focus should be on the lake which Heron Hills does. The street names need to be change. She likes the overall project but wants to leave the zone as R3. She agreed that there are safety concerns with Wildlife Blvd. The fencing requirements should be worked into the CC&R's.

Councilman Willden appreciates the work done to improve this project. He favors keeping the R3 zone with the variances. The wetlands options are nice. Secondary road access is needed for Hawks Landing. He agrees with the Heron Hills name.

Mayor Miller suggested little turnoffs for the lots that back the road.

Councilwoman Call moved to deny Ordinance 14-5 (3-25-14): amending the City of Saratoga Springs official zoning map. Councilwoman Baertsch seconded. Aye: Councilman Willden, Councilwoman Baertsch, Councilman McOmber, Councilwoman Call, Councilman Poduska. MOTION PASSED.

5. Preliminary Plat for Heron Hills located at approximately 3250 South Redwood Road, Steve Larson, applicant.

Councilwoman Call moved to approve the preliminary plat for Heron Hills located at approximately 3250 South Redwood Road with all findings and conditions including the lot size reduction, option #3 for the detention basin and directing the developer to work on the reallocation of the garages. Councilman Baertsch seconded. Aye: Councilman Willden, Councilwoman Baertsch, Councilman McOmber, Councilwoman Call, Councilman Poduska. MOTION PASSED.

6. Public Hearing: Amendment to Sierra Estates Master Development Plan located between 350-600 West and 400 North, Stephen Sowby, applicant.

Sarah Carroll noted that the MDA is close to expiring. The developer is asking to extend the agreement. One change is the city's request of 1.2 acres for the future Mountain View Corridor alignment. The developer is asking for a lot size reduction.

Steve Sowbie, applicant, said they strictly complied with the code in every case and have complied with the city's request for the Mountain View Corridor. They have worked with staff and will cooperate with the neighbors regarding agricultural concerns. There some slight errors and typos in the MDA and he asked the staff to work with them on correcting those.

Mayor Miller opened the Public Hearing.

Paula Heaton reminded them of agricultural use and rights that were grandfathered in. She asked them to let those coming in know about this.

Mayor Miller closed the Public Hearing.

Sarah Carroll noted that there are minor changes to the MDA. They have complied with all zoning and will dedicate land to the Mountain View Corridor but prefer to do that when the MVC actually comes through.

Ross Welch explained the reason for retaining ownership at this time is because of what happened with Pioneer Crossing. They had a piece dedicated to that and the Pioneer plans changed. If the MVC plans change, they want to retain ownership of their land.

Councilman McOmber said he loves Neptune Park and appreciates the change. He likes the age-in-place senior community. Having three entrances is helpful. He noted that the bungalows located nearest 400 North will be the last to sell because of the noise. He suggested reallocating the bungalows. We need to be sure the needs of the city are being met. He would like to see the MDA tied to the senior living community in the R6 zone and that if the senior community does not happen, it reverts back to R3.

Councilwoman Baertsch is okay with the MDA extension and also wants clear language that if not a senior community, it goes back to R3. She has concerns about all the entrances on 400 North and being across from the bus yard. She would like something that notifies buyers about the ag zone and that the Mountain View Corridor will be going right behind their houses.

Councilman Willden is fine with R6 being tied to the MDA.

Councilman Poduska is also concerned with the traffic. He likes the concept and the city needs something for the senior community.
Councilwoman Call would like to see that the parking stalls are located along the facility. Possibly flipping the driveways which is a safety concern at this time.

Councilwoman Baertsch moved to approve Amendment to Sierra Estates Master Development Plan located between 350-600 West and 400 North, Stephen Sowby, applicant, with the amendment that if it isn't assisted living it reverts back to R3 and notifications about ag use and the Mountain View Corridor be on the title and that staff approved changes to the MDA be included and that the property for the Mountain View Corridor does not need to be dedicated to the city at this time and with all finding and conditions. Councilman McOmber seconded. Aye: Councilman Willden, Councilwoman Baertsch, Councilman McOmber, Councilwoman Call, Councilman Poduska. MOTION PASSED

Ross Welch explained that visibility is very important for assisted living.

7. Public Hearing: Revisions to the City of Saratoga Springs Land Development Code. (Sections 19.01 – General Provisions, 19.02 – Definitions, 19.03 – Powers and Duties, 19.04 – Land Use Zones, 19.05 – Supplementary, 19.08 – Home Occupations, 19.09 – Off Street Parking, 19.12 – Subdivisions, 19.13 – Development Review Process, 19.14 – Site Plan Review, 19.15 – Conditional Uses, 19.17 – General Plan, Ordinances, or Zoning Map Amendments, 19.18 – Signs, 19.26 – Planned Community Zone.

Kimber Gabryszak presented the proposed code changes and the reasons for the changes.
Councilman McOmber felt that 19.18 should be pulled and reviewed further by the council.
Councilwoman Baertsch wanted to be sure that current businesses with sign applications would not be negatively impacted by delaying 19.18.
Kimber Gabryszak said those would be covered by existing code. Staff does need some direction. Staff can come back with something based on the earlier work session.

Mayor Miller opened the Public Hearing.

Karalyn Becraft asked for an easy way to find notifications of code changes. Researching the code and the minutes needs to be easier.
Kelsey Dean said Kimber has done great job. She is concerned about how much power is granted to the Planning Commission since they aren't elected.
LeAnn Galloway said they are about to open doors to Young Family Dental. They applied for the signs in January and were hoping for approval by tonight.

Mayor Miller closed the Public Hearing.

Kimber Gabryszak said that notifications are posted on the web site and the newspaper. They are working to make the site clearer. She is working with the city attorney to get indexes. The Planning Commission would only make smaller impact decisions. Young Family Dental will go to the next Planning Commission meeting and they are subject to the current code.

Councilman Willden is fine with all but 19.18. He prefers option #1.
Councilman Poduska prefers option #1and pull out 19.18.
Councilwoman Call fine with the changes, but asked that 19.18 be pulled at this time.
Councilman McOmber agreed to pull 19.18. He appreciates the sub-committee that has worked on this.
Councilwoman Baertsch had question regarding the seasonal sales language. She questioned temporary residential use language.
Kimber Gabryszak explained the reasoning and that the standards are still there.
Councilwoman Baertsch asked that direction be given to the two businesses coming with sign requests.
Kimber Gabryszak suggested creating a sign ordinance for medical buildings.
Mayor Miller said to pull 19.18.

Councilwoman Baertsch moved to approve Ordinance 14-6 (3-25-14): adopting amendments to the City of Saratoga Springs Land Development Code with the changes made tonight and taking out Section 19.18 for further discussion. Councilwoman Call seconded. Aye: Councilman Willden, Councilwoman Baertsch, Councilman McOmber, Councilwoman Call, Councilman Poduska. MOTION PASSED.

9. Resolution R14-16 (3-25-14): appointing an alternate representative to the Utah Valley Dispatch Special Services.

Mark Christensen presented the resolution. He explained that this person had to be an elected official.
Councilman Willden would like to be nominated.

Councilwoman Baertsch nominated Councilman Willden. Councilwoman Call seconded. Aye: Councilman Willden, Councilwoman Baertsch, Councilman McOmber, Councilwoman Call, Councilman Poduska. MOTION PASSED.

Policy Session was adjourned at 10:40 p.m.

_____ _____

Date of Approval **Lori Yates, Recorder**

CITY OF SARATOGA SPRINGS
CITY COUNCIL MEETING

Tuesday, April 29, 2014
Meeting held at the City of Saratoga Springs City Offices
1307 North Commerce Drive, Suite 200, Saratoga Springs, Utah 84045

DRAFT CITY COUNCIL MINUTES

WORK SESSION-Commencing at 5:45 p.m.

Present:
Council Members: Mayor Miller, Councilwoman Baertsch, Councilwoman Call, Councilman McOmber, and Councilman Willden, Councilman Poduska
Staff: Lori Yates, Mark Christensen, Spencer Kyle, Kevin Thurman, Owen Jackson, Kimber Gabryszak, Jeremy Lapin
Others: Chris Porter, Ryan Poduska, Karalyn Becraft

1. Agenda review:

Councilwoman Call asked staff questions regarding the franchise agreements that are schedule to be review and possibly approved during the policy session tonight. She then discussed several budget questions she had with staff as well.
Councilman McOmber, Councilwoman Baertsch and Councilwoman Call expressed their concerns with adding additional funds to the library budget.

The Council gave direction to Jeremy Lapin to have an RFP for the secondary water meters.

2. Interview potential candidate for the City's Urban Design Committee.

The Urban Design Committee has an opening for a builder representative. Ray Dawson, an employee with Edge Homes had submitted an application. The Council asked Ray many questions with regards to the City's future growth and design of the City. The Council felt the Ray would be a great asset to the City.

3. Discussion of possible adoption of new private road standards.

Jeremy Lapin discussed the revised private road standards and indicated that he would like to see the adoption of these amendments be placed on an upcoming Council agenda.
The Council was fine with staff's proposed private road standards.

4. Discussion of City Code Amendments to Title 18 adding grading permit requirements.

Jeremy Lapin discussed the grading permit amendments with the Council.
The Council had no comment concerning this item.

Adjourned to policy session at 7:08 p.m.

POLICY SESSION- will follow Work Session.

Present:
Council Members: Mayor Miller, Councilwoman Baertsch, Councilwoman Call, Councilman Poduska, Councilman McOmber, and Councilman Willden
Staff: Lori Yates, Mark Christensen, Spencer Kyle, Kevin Thurman, Kimber Gabryzsak, Chief Jess Campbell, Sarah Carroll, Owen Jackson, Chelese Rawlings, Chief Andrew Burton
Others: Chris Porter, Karalyn Becraft, Ryan Poduska, Julie King, Bryan King, Rob Haertel, Vance Twitchell, Kenny Johnson, Tony Mowt, Terri Smart, Beverly Richins, Brandon Richins, Andy Schreyer, Shauna Brown, Bruce Baird, Tiffany Barney, Darren Wright, Jon Tills, Gavin McClellan, Cari Krejci, Bob Krejci, LeeAnn Galloway, Gordon Cook, Elaine Dahle

- **Call to Order by Mayor Miller**
- **Roll Call.**
- **Invocation/Reverence was given by Councilman Poduska**
- **Pledge of Allegiance was led by Jeremy Lapin**

Mayor Miller swore in Jerry Lund, Tyson Frazier and Kenny Johnson as Captains for the Saratoga Springs Fire Department. Chief Jess Campbell gave a briefly biography of each of the Captains.

Mayor Miller opened the public input.

Julie King said that when Riverview Elementary was built, the understanding was that a crossing guard would be provided to assist those students attending the school. That has yet to happen and is asking the Council to follow through with that promise. The city had guaranteed a budget for the crossing guard. We are here to ask that a crossing guard is hired as soon as possible for this location.

Ruth said students that walk to school everyday fear for their lives. They believe that a crossing guard would be best for the area. She asked that the council consider hiring on for this location is a good idea.

Mayor Miller closed the public input.

POLICY ITEMS

1. Consent Calendar:
a. Resolution R14-23 (4-29-14): Appointing members to the Urban Design Committee.
b. Adopting the Arbor Day Proclamation.

Councilwoman Call made a motion to approve the consent calendar including the resolution that will appoint Ray Dawson to the Urban Design Committee and was seconded by Councilman Poduska. Aye: councilwoman Call, Councilman Poduska, Councilman Willden, Councilman McOmber and Councilwoman Baertsch. Motion passed unanimously.

2. Public Hearing: Adopting the Culinary and Secondary Water Impact fee Facilities Plan and Analysis and enacting Culinary and Secondary Water Impact Fees.

Mayor Miller opened the public input.

No public input at this time.

Councilwoman Baertsch motioned to closed the public input and was seconded by Councilman McOmber. Aye: Councilwoman Baertsch, Councilman McOmber, Councilman Willden, Councilman Poduska and Councilwoman Call. Motion passed unanimously.

Councilman McOmber appreciates the work that has been done to complete this plan.

Councilman Poduska asked when the ordinance would take effect.
Kevin Thurman said in 90 days.

Councilman Willden indicated that he supports both ordinances.

Councilwoman Baertsch asked if language needs to be added to address the adjustments.
Jeremy Lapin indicated that he would need to follow through with legal counsel before making any changes.

Councilwoman Call mentioned that both ordinances should be effective in 90 days along with adopting the credit but should decrease the fees later.

Councilwoman Baertsch motioned to approve Ordinance 14-6 (4-29-14): An Ordinance adopting the Culinary Water Impact Fee Facilities plan and Analysis and Enacting Culinary Water Impact Fees. Motion was seconded by Councilman McOmber. Aye: Councilwoman Baertsch, Councilman McOmber, Councilman Willden, Councilman Poduska and Councilwoman Call. Motion passed unanimously.

Councilwoman Baertsch motioned to approve Ordinance 14-6 (4-29-14): An Ordinance adopting the Secondary Water Impact Fee Facilities plan and Analysis and Enacting Secondary Water Impact Fees which will take effect in 90 days as per City Code. Motion was seconded by Councilman Willden. Aye: Councilwoman Baertsch, Councilman Willden, Councilman McOmber Councilman Poduska and Councilwoman Call. Motion passed unanimously.

3. Resolution R14-24 (4-29-14): A resolution adopting the Tentative budget for Fiscal Year 2014-2015 and setting a date and time for the public hearing.

Chelese Rawlings appreciates the Council efforts with their thoughts and changes to the tentative budget.

Councilwoman Call stated that the budget will be changing. The efforts of staff are appreciated. Fantastic work has been done.

Councilman Poduska is amazed by Chelese Rawlings completion of the budget and commenced her for her work.

Councilman Willden thanked staff for their hard work and how detailed the budget is. Well done!

Councilwoman Baertsch said there is work to still be done to the budget, but will be finalized in the near future.

Councilman McOmber appreciates staff's efforts with preparing the budget. He asked the Council if they would like to see that a recreation director be implemented to the recreation budget and would they support this request.

Councilwoman Call if it pays for its self then she could support it. Has no other question with the tentative budget at this time.

Councilman Willden said that hiring a recreation director would be great thing for the City.

Mayor Miller indicated that this is the direction the City needs to go with the position and suggested it be a place holder.

Councilwoman Baertsch agrees only if the recreation department can sustain its self. Also, we should consider capping the number of children who can play soccer until we know that we have enough coaches for each of the created teams.

Councilman Poduska said that the increase in sports participation would be well worth it and self-sustaining.

Mark Christensen indicated that if the Council is comfortable budgeting the position then we would to come up with a plan on how the funding would occur. The first few years might need to be substitution by other programs but is confident that the program would be self-sufficient.

Councilman McOmber appreciates the efforts of our Civic Events Committee and would like to see a budget for fireworks for Splash days. A budget possibly less than $7,000.

Councilwoman Baertsch stated that the residents have expressed concerns over fireworks and would like to have the Fire Chief provide information regarding fire liabilities if our fire department was to do the fireworks or we hire a professional company.

Councilwoman Call stated that she like the idea of fireworks but not the cost of the fireworks. She's not ok to add the item to the budget but would be willing to go out and find sponsors to fund the fireworks.

Councilman Poduska indicated that the residents need a fireworks show.

Councilman Willden supports adding the fireworks and suggested working to have the fireworks sponsored in the future.

Councilwoman Baertsch indicated that she is not keen on the pay increase for the Council. Our position is to serve the residents.

Councilwoman Call feels that a pay increase is necessary but would like to hear from the other Council.

Councilman McOmber stated that the Council needs to make sure that they are reimbursed of their travel expenses. He would also like to see that the Council be included in the 65 percentile pay plan.

Councilman Willden agrees to support this as a long term solution especially for future candidates.

Councilman Poduska said that as he has reviewed the budget, the pay increase for the Council doesn't seem too substantial.

Councilman Miller would like to see the Council reimbursement for travel expenses.

Councilwoman Call agreed with a pay increase for the Council. We do need to review what should be reimbursed to the Council regarding expenditures.

Mark Christensen what I am hearing is the Council would like to keep the pay increase. The majority of the Council was fine with adding the fireworks to the budget but to put a place holder on the recreation coordinator for now.

Councilman McOmber motioned to approve Resolution R14-24 (4-29-14): a resolution adopting the Tentative Budget for Fiscal Year 2014-2015 and setting a date and time for the public hearing. Seconded by Councilman Poduska. Aye: Councilman McOmber, Councilman Poduska, Councilman Willden, Councilwoman Baertsch and Councilwoman Call. Motion passed unanimously.

4. Approval of Franchise Agreement with CentraComm Interactive, and Avative, LLC.

Kevin Thurman presented both franchise agreement which included the changes made by both the City and both companies.

Councilman Poduska asked if it was possible to change the terms from 10 years to 5 years.
Kevin Thurman stated that the Council is allowed to make revision to these agreements, so if you would like the term to change then staff will make that change.

Councilwoman Call asked that the agreements be consistent and would prefer a 5 year term.

Councilman McOmber appreciates the language in the agreements and he too would ask that the agreements be consistent.

Councilwoman Baertsch said she fine with the 5 year term.

Councilman Willden stated that he is fine with what has been suggested with consistency.

Councilwoman Call made motion to approve Ordinance 14-8 (4-29-14) granting a nonexclusive franchise to operate an Internet Services Network in the City of Saratoga Springs for CentrComm

Interactive with staff recommendations and adopting the franchise fee. Seconded by Councilman Willden. Aye: Councilwoman Call, Councilman Willden, Councilwoman Baertsch, Councilman McOmber and Councilman Poduska.

Councilwoman Call made motion to approve Ordinance 14-9 granting a nonexclusive franchise to operate an Internet Services Network in the City of Saratoga Springs for Avaive, LLC including the that the term is changed to 5 years instead of 10 years for autorenewal and adopting the language suggested by legal counsel for franchise fee. Seconded by Councilman Poduska. Aye: Councilwoman Call, Councilman Poduska, Councilman Willden, Councilwoman Baertsch and Councilman McOmber. Motion passed unanimously.

5. Settlement agreement with Capital Assets regarding development of Plat 17 of Saratoga Springs Development (Green Springs).

Kevin Thurman indicated that after several months of negation between both parties a settlement agreement has been agreed to. This will benefit the unimproved area and Capital Assets will improve sections of the open space. Staff finds this agreement to be favorable and recommends approval.

Councilman Willden agrees that it's time to move forward with this development.

Councilwoman Baertsch and Councilwoman Call had no comments at this time regarding this item.

Councilman McOmber stated that he likes the idea.

Councilman Poduska said he is glad to see a mutual agreement between the City and the developer.

Councilman Willden motioned to approve the Settlement Agreement with Capital Assets regarding development of Plat 17 of Saratoga Springs Development. (Green Springs) Seconded by Councilman Poduska. Aye: Councilman Willden, Councilman Poduska, Councilman McOmber, Councilwoman Baertsch and Councilwoman Call. Motion was unanimous.

6. Preliminary Plat for Green Springs Plat 17 of Saratoga Springs Development located at approximately 1855 South Centennial Boulevard, Capital Assets, applicant.

Sarah Carroll presented the Preliminary Plat for Green Springs Plat 17.

Councilwoman Baertsch is pleased to see this development moving forward. She wishes that there was more internal open space but understands the prior requirements. She understands that the residents have expressed concerns with sidewalks be installed but this is a matter that needs to be addressed with the HOA and not the City since the roads are private.

Councilman McOmber stated that he is happy to see single family homes. The soils in this area are horrible and bring great concern because of it. He suggested that Lot 26, 27, 30, and 35 have additional soils testing done prior to a home being built because they are directing located on top of the old wash or make it noted to those lots. He is fine with the proposed trail. For the record we are working on the classification for golf courses.

Councilwoman Call asked staff to direction to the Council regarding the wash issues.

Mark Christensen stated that typically with all construction a Geo Tech report must be completed, this identifies the general conditions on site and then mitigate the outlined conditions. As far as fill or compaction is identify in the Geo Tech reports.

Jeremy Lapin indicated that the building department requires a Geo Tech report and requires imported dirt to be on location.

Councilwoman Call said this development as a whole is great. If the HOA is willing to install sidewalks and trails then she would support that request.

Councilman Poduska and Councilman Willden both stated that they were fine with the plan.

Councilman Poduska motioned to approve the Preliminary Plat for Green Springs Plat 17 of Saratoga Springs Development located at approximately 1855 South Centennial Boulevard, Capital Assets, applicant including the findings and conditions listed in the staff report dated April 29, 2014. Seconded by Councilman Willden. Aye: Councilman Poduska, Councilman Willden, Councilman McOmber, Councilwoman Baertsch and Councilwoman Call. Motion was unanimous.

7. Sign permit for Young Family Dental located at 1416 Redwood Road, Universal Signs, applicant.

Sarah Carroll presented the sign permit plan for Young Family Dental building. Staff has provided three options but the Council can add their own option.

Councilman McOmber said he favors all three requested signs.

Councilwoman Call said that the Council is trying to accommodate the needs of the business and would be willing to support three or four signs but not of fifth sign.

Councilman Poduska said our primary concern is to be business friendly. We don't want to see the businesses lose opportunities for advertising and would support the wall sign that faces Redwood Road.

Councilman Willden feels that the proposed signs won't clutter the building and is fine with the proposal.

Councilwoman Baertsch supports what was stated by Councilwoman Call and feels that we are business friendly and would support a total of four signs.

Councilwoman Call wants to make sure we allow businesses to advertise and would support four signs allowing the business owner to place the signs anywhere on the building but only allowing two sign per side.

Councilwoman Call motioned to approve the sign permit for Young Family Dental located at 1416 Redwood Road, Universal Signs, applicant allowing a total of 4 wall signs with the stipulation of no more 2 sign on any one side of the building along with option #2 of the staff findings but removing condition #10 from those findings and allowing for monument sign. Seconded by Council Baertsch Aye: Councilwoman Call, Councilwoman Baertsch, Councilman Willden and Councilman McOmber. Nay: Councilman Poduska. Motion passed.

Sarah Carroll asked the Council to clarify the size limitation for the signs. Councilwoman Call indicated that she is fine with the size limit listed in condition #7.

8. Approving the Israel Canyon drainage channel landscaping and maintenance options.

Jeremy Lapin briefly discussed the previously option and asked that the Council provide direction to staff.

Councilwoman Call said she would be in support of building a trail but suggested that the park subcommittee review this item as far as prioritization.

Councilman Poduska supports building a trail but understands the difficulties of making all property owners happy.

Councilman Willden indicated that he favors option #2 of staff's recommendations.

Councilwoman Baertsch said the connectivity of the trail is great opportunity and to be able to connect the neighborhoods more fully along with increasing the possibilities of recreation.

Councilman McOmber said he is struggling with both option 1 and 2. The purchase of the property would need to be necessary. He would like to see what the cost of the trail would be along with a timeframe.

Kevin Thurman indicated that any sale of property would require a lengthy process and requires some effort. The license agreement could have language that would reduce liability with the City but doesn't mean the court will guarantee the commodification claws.

Mayor Miller said that he would like to see the trail corridor stay the same size if we were to take that direction.

Councilwoman Call asked if selling the current open space in Jacobs Ranch would create a problem with the required open space. The liability of the license agreement is far exceeding what the City would be willing to take in consideration. There needs to be one solution for the entire situation. We have to have continuity.

Councilwoman Baertsch said that also along those lines we need to consider the future maintenance of the area and having access to the area.

The Council agreed to allow the property owners to provide public input regarding this time.

Gavin McClellan said that he recently was made aware of these options. A trail already exists to the area and putting an additional public walkway near our homes brings great security and safety concerns. This brings quick and opportunities for those walking behind their homes. When he bought the house a trail wasn't part of the proposal. The maintenance of the trail is a concern also.

Brandon Richins stated that he would like to see his fence reinstalled. He expressed concerns with the seeds on both sides of his lot. Adding additional fencing will not improve the area. The proposed trail doesn't make since.

Beverly Richins, indicated that she is unhappy with the proposed trail and feels that their property may be vandalized.

Councilman Willden mentioned that he would supports turning the property over to the surround property owners.

Councilman McOmber said he would like to see cost options first before making a decision.

The Council would like staff to provide cost analysis and timing of this proposal.

Gordon Cook expressed concerns with the City wanting to install fencing in certain area. This is a concern along with the maintenance of the trail. As a resident and homeowner there is a lot of holes with this proposal and would like to know how this proposal is going to work.

Councilman McOmber motioned to table the Israel Canyon drainage channel until additional information from staff is gathered. Seconded by Councilwoman Call. Aye: Councilman McOmber, Councilwoman Call, Councilman Willden, Councilwoman Baertsch, and Councilman Poduska. Motion was unanimous.

9. Ordinance 14-10 (4-29-14) Approving the amended Standard Technical Specification and Drawings Manual.

Jeremy Lapin briefed the Council with the amendment which addresses the City's street lighting standards.

The Council and staff discussed the cost of replacing the lights. The Council was fine with the proposed changes.

Councilwoman Baertsch motioned to approve Ordinance 14-10 (4-29-14) approving the amended Standard Technical Specification and Drawings Manual. Seconded by Councilman Willden. Aye: Councilwoman Baertsch, Councilman Willden, Councilman McOmber, Councilwoman Call and Councilman Poduska. Motion was unanimous.

10. Approval of Reports of Action.

Kimber Gabryszak reviewed the approved development items with the Council.

The Council read the report and made a few minor changes to the reports.

Councilman McOmber motioned to approve the report of actions for Green Springs and Young Family Dental. Seconded by Councilman Willden. Aye: Councilman McOmber, Councilman Willden, Councilman Poduska, Councilwoman Baertsch and Councilwoman Call. Motion was unanimous.

***Reports from Council and staff:**

Councilwoman Baertsch reported that the fees with MAG executive committee were received and are remaining at 25 per capita. The general assessment will be a total $9,055.00 there might be a decrease in the fee but no increase will occur. Also, the Iron Will event is coming up and the City will have a booth there. They have asked that a City Council member be present.

Councilman McOmber stated that on May 1, 2014 the Communities that Care will be having a presentation that is open to the public. This event will be located that Eagle Mountain City Council Chambers.

Councilman Poduska report that Platinum Car Wash near Wal-Mart and Times Square have been reviewed by the Urban Design Committee and are ready to be reviewed by the Planning Commission.

Owen Jackson reported that a ribbon cutting will be held on Friday, May 2, 2014at 10:00 a.m. for Lance Dome's Marriage and Family Therapy business located in the Sergeant Court development.

Councilman Mcomber appreciates the budgets transparency.

Motion was made by Councilman McOmber to enter into closed session at 10:08 p.m. for the purchase, exchange, or lease of property, pending or reasonably imminent litigation, the character, professional competence, or physical or mental health of an individual. Motion was seconded by Councilwoman Baertsch.
Present: Mayor Miller, Councilman Willden, Councilwoman Baertsch, Councilman McOmber, Councilwoman Call, Mark Christensen, Lori Yates, Kevin Thurman, Jeremy Lapin and Spencer Kyle.

Closed session ended at 10:15 p.m.

Motion to adjourn the policy session at 10:15 p.m. was unanimous.

_____
Date of Approval

_____
Jim Miller, Mayor

_____
Lori Yates, City Recorder

City of Saratoga Springs
City Council Meeting
May 6, 2014

Meeting held at the City of Saratoga Springs City Offices
1307 North Commerce Drive, Suite 200, Saratoga Springs, Utah 84045

Draft City Council Minutes

Present:

Mayor: Jim Miller
Council Members: Michael McOmber, Shellie Baertsch, Rebecca Call, Stephen Willden, Bud Poduska
Staff: Scott Langford, Mark Christensen, Kimber Gabryszak, Kyle Spencer, Owen Jackson, Kevin Thurman, Jeremy Lapin, Lori Yates, Nicolette Fike
Others: K. Becraft, S. Alexander, Larry Whiting, Chris Porter, J. Klingonsmith, Lars Anderson, Christian Or, Bruce Baird, Susan Palver, Ronald Johnston, Brandon Beutlie, Larry N. Johnson, Vance Twitchell, M.Brown, Mark Babbit, John Kollman, Gary Kirschbaum, Sydney Jacques, Greg Haws, Boyd Martin, Kristl Travis

Work Session

Call to Order - 5:57 p.m.

1. **Agenda Review - item moved to later in the meeting.**
   a. Discussion of current City Council agenda staff questions.
   b. Discussion of future City Council policy and work session agenda items.

2. **Discussion the draft Public Involvement RFP for Secondary Water Phase 2 meter retrofit project.**
   Sydney Jacques - Civil Engineer Jacques & Associates. She brought a presentation on Public Relation Issues with Water Projects. The presentation showed need for public outreach, public relations, and public involvement.
   Jeremy Lapin - Presented an agenda on Phase 2 Secondary Meters, Discussion was held to clarify and answer these questions. He felt it helped provide insight as to why it was beyond the ability of the staff to handle alone. It's about scope and how much service is needed. Discussion was held on the following items:
   i. *Public Relations/Public Information Summary*
   ii. *What is the PR/PI Audience?, All residences or only those in phase 2?*
   After discussion, Council was in general agreement to only including Phase 2 as the target audience.
   iii. *Open House*
   Staff noted they will probably not be requesting one. Council agreed.
   iv. *Project Website*
   Councilwoman Call - Said she is happy to implement a website.
   Discussion continued on whether the city could host the site on its servers or if it would be better to have it on another site/server.
   Direction from Council is that we do the website, but want to do it as a separate website.
   v. *Project Hotline?*
   Jeremy Lapin - feels it's something that the project really needs to have and we would expect the consultants to host.
   Discussion continued as to what information would need to be in the proposal and how fast of a

response time. Any inquiries that do not apply to hotline would be directed to Owen, to deal with on case by case basis. Response time should never be longer than 24 hours.

vi. *Public Information*

Jeremy Lapin - How much do we want them to help us with?

Mayor and Council felt that if we were hiring them we should be using them and they should work with Owen to know what information is needed.

Sydney Jacques – answered as to what they would need in a proposal as far as scope. Examples would be; what answers do you know right now, defining what we are ready to tell people and what is wait and see. Want them to prepare FAQ sheets and update that, prepare info flier, content for website.

She sought clarification who they would be working with, it would be Owen Jackson.

Council/Staff will work with firm to make sure it's the right message.

Councilwoman Call - wants the contractor to know that we're going to be doing a lot of the legwork on the questions and answers. She prefers that we get them the information and they make it understandable for residents and then disseminate the information in an understandable way. Make sure we convey that message in proposal for bids.

Mayor Miller - we will put those things from item 6 into the proposal.

vii. *Schedule Management*

It was felt that we needed someone that could focus their attention on all this. Construction would dictate the schedule and PI firm would have to try and stay ahead of that and make sure residences get the info ahead of time. Someone would be needed to coordinate with contractor and PI firm.

viii. Does the City want the PI/PR firm to have someone available on the ground during the project?

Councilwoman Call - felt periodically was sufficient.

Jeremy Lapin - to clarify we'll be out doing about 25-30 homes a day.

Councilwoman Baertsch – felt that if the PR firm is going to be out there handing out fliers anyway can they answer the questions because they are going to be getting the questions.

Sydney Jacques - Thinks they should make it a requirement that the person doing the notification be the same person that has the Hotline. One of the biggest questions on the scope is "How much does public need to be contacted?" She would require 2 notifications, one overall that this is starting period and a specific one 48 hours ahead.

Jeremy Lapin - needs two members to serve on selection committee, to sit with staff, look over proposals and making a selection. Councilman Willden, and Councilwoman Call as she will be doing website.

3. Discussion of the modified Legacy Farms Community Plan and Village Plan.

Kimber Gabryszak - Summarized plan. Showed original plan with two church sites and school site. Change to school site further and Village plan changes a bit. Application was originally planned this Thurs. moved to June 12th.

Greg Haws - showed presentation for Legacy Farms, starting with side by side comparison of plans. He went over changes and some reasons for them. Took 20 ft out of green way and relocated Tickville wash to along 400 S. It includes 12' concrete lined channel with guardrail and berm, sidewalk and curb. Expanded school site close to 11+ acres. They are negotiating joint use of 3-4 acres for open space. In regards to Leisure Village, it's a senior restricted project, no basements. The presentation showed examples of other similar communities. Green way acreage has maintained the same.

Council Baertsch questioned not doing a pool/clubhouse anymore. She and several Council members reminded applicants that they had promised the neighboring communities on that issue.

Boyd Martin, D.R. Horton Homes – explained that they looked at clubhouse and pool hard and their management company and sales team felt the size of pool/clubhouse was not enough to service the large

community. They thought there were better uses, such as splash pad or skate park, things the city lacks, and felt it would better serve community. They have put a lot of thought and research into it.
Councilman McOmber - Asked if they were building it or if they wanted the city to build it.
Boyd Martin - said he had 8 acres of land he would like to donate to the city, along with the cost he would be putting in.
Councilman McOmber - expressed concern that residences were not aware of these changes, and would be frustrated.
Councilwoman Call- noted previously there would be parking at clubhouse. Now how would there be parking for splash pad in current configuration.
Boyd Martin - there would still be parking in both spots, it wouldn't change.
Councilwoman Call - wondered if the Tickville realignment, the original overall open space width was still in the plan.
Boyd Martin - It's there in berm.
Councilwoman Call – on the open space, how would it work with current code if they realign?
Kimber Gabryszak - If they were subject to current code tit would be applicable, but since they are in district area plan this would all qualify as open space.
Mark Christensen - feels it will be a far better space maintenance wise, a good concession.
Councilman Willden - likes the added features of it, and contiguous nature or green space makes it more usable.
Councilman Poduska - thinks it's going to be a "showplace" for the city and the citizens coming to live in it don't know about pool or club house and feels if the applicant's consultants did the studies than that was probably a good decision.
Councilman McOmber - concern that neighboring residents will not like proposed changes. They need to have another public meeting to show new layout.
Jeremy Lapin - wanted City Council to understand that staff wanted the contractor to show a baseline point on conditions. So it would be a better starting point for discussion on decisions.
Councilwoman Baertsch - noted the increase of shared lanes.
Councilman Call – asked the developer to clarify the statement if the city participates. Does the developer plan on spending the money to put in a public splash pad?
Boyd Martin - said the city would pay the difference.
Kristl Travis - they would be doing shrubs, trees, green space and trail, planters etc. and a little bit of amenities for smaller things within the pad.
Councilman Poduska - No comment at this time.
Councilwoman Call- On lower west portion, larger lots, concern where it goes into cul-de-sac, driveways would be on busy road, does code currently allow for that width for r/w, could planning staff look into that. Likes the thought put into implementing the newer-type features and is appreciative on not a larger number of homes. Appreciates willingness to work with council and staff and community and ultimately if it meets our code and requirements, that we can work together and all be proud of it. Council still has concerns but feels like we are moving along to see some actual building. Wants to work to mitigate the disappointments and use staff as assets.
Councilman McOmber - feels disappointed.
Councilwoman Baertsch – also feels disappointed. She feels that it doesn't meet definition of traditional neighborhood. Density has increased and promises to residences around the area are not being followed through with especially the clubhouse and pool. She feels the HOA needs a place to meet, a clubhouse. She wants the trail and 20' buffer. She likes leisure village. Concerned with road, with 13.5' to back of curb, makes it difficult for cars to manoeuver. She would like to see it brought back city standards. Tickville wash is a great change for the city. She doesn't mind school change. (Information on traffic study for change to that road has been submitted to Jeremy.) Cannot see approving Village plan or Community plan until they have nailed down the FEMA flood plains there. Echoed Planning Commission comments about parking etc. and feels there is a lot of work to do.

Councilman Widen - thinks restructuring of parks is an improvement, likes shared space with school as long as the agreement is obtained. Wanted clarification on how much the density has actually increased. Plan currently is 740 by D.R. Horton and 116 Leisure Village.
Councilwoman Baertsch - noted that early version pulled out reference to apts.
Staff clarified that the new version will not have reference to apartments.

Mayor Miller - Due to time further work session items will be postponed.

4. Discussion of the Lakeside Trail with Laura Ault. - Postponed

5. Discussion of Proposed Amendments to Title 20, Administrative Code Enforcement.
Kevin Thurman asked about fees.
Mayor Miller - asked if there were any outstanding concerns from council that they let Kevin know.

6. Reports: Postponed
a. Mayor
b. City Council
c. Administration communication with Council

Adjourn to Policy Session. 7:15 p.m.

Policy Session

Present:
Mayor: Jim Miller
Council Members: Michael McOmber, Shellie Baertsch, Rebecca Call, Stephen Willden, Bud Poduska
Staff: Scott Langford, Mark Christensen, Kimber Gabryszak, Kyle Spencer, Owen Jackson, Kevin Thurman, Jeremy Lapin, Sarah Carroll, Chelese Rawlings, Jess Campbell, Andrew Burton
Others: K. Becraft, S. Alexander, Larry Whiting, Chris Porter, J. Klingonsmith, Lars Anderson, Christian Or, Bruce Baird, Susan Palver, Ronald Jonhston, Brandon Beutlie, Larry N. Johnson, Vance Twitchell, M.Brown, Mark Babbit, John Kollman, Gary Kirschbaum

Call to Order - 7:18 p.m.
Roll Call - Quorum was present
Invocation / Reverence - Given by Councilman Poduska
Pledge of Allegiance - led by Officer Beglarian

Awards, Recognitions and Introductions
Swearing in of Special Functions Officer Nicholas Judson by Mayor Jim Miller.

Public Input - Opened by Mayor Miller
Larry Johnson - concerning Saratoga Splash, dates June 9-14 - years ago we used to have the parade in Saratoga Springs Dev., He thought we would get more reception if we moved it back, maybe on a rotating year. Offered to work on that board next year to feel the option out. Thank you to Council for their work and trying to follow laws and rules set up.
Public Input Closed by Mayor Miller

Policy Items

1. <u>Financial Quarterly update</u>

Chelese Rawlings - revenues are healthy and over budgeted, expenses less than budgeted. Added extra sheets thanks to Councilman Willden, it made it easier to see.
Councilman Willden - no questions.
Councilwoman Baertsch - agreed with new highlights. She asked for clarification why the drop in licensing and permitting? Chelese said the drop includes all permits.
Councilman McOmber – wanted to make sure residents are getting all different licenses Our budget is conservative when budgeting and there is concern that it will continue to go down year after year as the economic engine is slowing.
Councilwoman Call - believes the process is to send out reminder (for licensing) 30 days prior to expiration, and one more once it's expired. We need to make sure process in place that notifies them and audit them. Asked for clarification on how much was transferred from general fund to fund 35, and to make sure that when money is transferred that we don't spend it automatically.
Mark Christensen said what we transfer is in excess of the 25%.
Councilman Poduska- questions were answered previously by Chelese Rawlings over the phone.
Mayor Miller - are we paying for cans over time?
Mark Christensen - we did purchase recycle cans; it enabled us to reduce overall payments. They are still providing garbage cans, all new accounts added they are providing. All can stock will be ours at end of contract period.

2. <u>Consent Calendar:</u>

a. Award of Engineering for the Riverside Drive and Pioneer Crossing Connection road project.

b. Approval of Minutes:

i. January 14, 2014.

ii. January 21, 2014.

iii. January 31, 2014.

iv. February 18, 2014.

v. February 25, 2014.

<u>Motion by Councilwoman Baertsch to approve Consent Calendar including award of Engineering for Riverside Drive and Pioneer Crossing Connection road project to PEPG in the amount of $176,000 and Approval of Minutes for January 14, 2014, January 21, 2014, January 31, 2014, February 18, 2014, and February 25, 2014, including all minutes changes sent through email and minor adjustments. Seconded by Councilman McOmber. Aye: Councilman McOmber, Councilwoman Baertsch, Councilman Willden, Councilman Poduska and Councilwoman Call. Motion was unanimous.</u>

3. <u>Public Hearing: Revisions to the Land Development Code. (Section 19.12.06, Private Roads)</u>

a. Ordinance 14-11 (5-6-14): an ordinance adopting the amendments to the City of Saratoga Springs Land Development Code.

Scott Langford - presented changes, amounts to a small change in title 19. There are 4 cross-sections for council to review, taken on case by case basis.

Public Input was opened by Mayor Miller

Larry Johnston - noted his HOA has the privatized roads and they have found they create an unsafe condition. People hiking tend to hike on the roads, parking on both sides is very dangerous. He feels any time the city can ask that roads be standard size for safety would be appreciated.

Motion to close public input made by Councilwoman Baertsch and seconded by Councilman Willden. Motion passed unanimously.

Councilwoman Call - liked the incorporation of trails on each side of the street. She asked for more information on current travel lanes throughout the area.

Jeremy Lapin - these all have 26' of drivable surface, which is the same a public road. Councilwoman Call - Does agree that driving, an especially larger vehicle, on these roads is difficult. Just because it meets current standards doesn't mean we can't evaluate it and make sure it is the best decision.

Jeremy Lapin - indicated that they have the option in case that is really what the developer wants.

Councilman Poduska - agrees with Larry Johnson, once you start parking on these private roads, the travel lane is really restricted.

Councilwoman Baertsch - those are same as her neighborhood, and you can park on both sides of the street but only one car can fit through.

Jeremy Lapin - decreases speeds and cheaper to maintain, meets fire codes, but does require people to be considerate to their parking. They are trying to strike a fair balance between accommodating vehicles and pedestrians.

Kevin Thurman - council should take into consideration, if you read this language it doesn't create standards as to when developer can use these vs. other roads. There are no criteria set.

Councilwoman Call - her understanding is that these can be selected at site plan but it has to have council approval, but they aren't going to save much money. It's whether they are privately maintained or publicly maintained.

Kevin Thurman - it requires less land dedication so the developer could pick it to save money.

Jeremy Lapin - feels they would lose too much open space in trade for park strips.
Councilwoman Baertsch - In open space definition, on smaller lot sizes it calls out that driveway structures are not included in open space and specifically open space between driveways and structures, so on smaller areas they wouldn't count anyway.
Scott Langford - correct, Jeremy is talking more in general layout and design. It would help create more contiguous open space and gives more flexibility to the developer. It helps create more contiguous open space.
Councilman Willden - likes the change, that we are making it easier to build the private roads and larger lots.
Councilwoman Baertsch - question on code section 19.12.06.1d says this would happen at preliminary plat, why not preliminary and final?
Kimber Gabryszak - once they seek preliminary, they can go in and begin to install their improvements so we need to know at that time which it is.
Councilwoman Baertsch - we should reiterate it in final plat. Do we need to stipulate this in the code then?
Kimber Gabryszak - replied that we can always make that a condition and when the final comes through compare it to the preliminary.
Councilwoman Baertsch - as far as the roads, one section included rural 1 the other didn't, we need to make sure we include R1 in there. Staff asked about the naming of these?
Jeremy Lapin - replied that it will be what detail number they are, staff will get it figured out.
Councilman McOmber - with existing private roads approvals, are they held to this new standard or are they grand fathered in?
Scott Langford - many are under existing MDA's and would be allowed to continue. New Lakeside would also be grand fathered in.
Councilman McOmber - with trail on both sides, the HOA doesn't want that, if MDA expires then they would lose that right, correct?
Kimber Gabryszak - just because there is a private road and new developer connects to it, we did not build anything in that would allow them to continue that cross hatch, they would have to clear it and meet current standard.

Motion by Councilman Poduska to approve ordinance 14-11 (05-06-2014): adopting the amendments to the City of Saratoga Springs Land Development Code, including the R1 zone, and staff findings and conditions. Seconded by Councilwoman Call. Aye: Councilman McOmber, Councilman Poduska, Councilwoman Baertsch, Councilman Willden and Councilwoman Call. Motion was unanimous.

4. Amendments to the Engineering Standards Specification and Drawings Manual pertaining to private roads standards.

a. Ordinance 14-12 (5-6-14): an ordinance adopting amendments to the Engineering Standards Specification and Drawings Manual adopting private roads.

Jeremy Lapin - noted this is the same discussion

Motion made by Councilman Willden to approve Ordinance 14-12 dated May 6, 2014: an ordinance adopting amendments to the Engineering Standards Specification and Drawings Manual adopting private roads including any findings and conditions. Seconded by Councilwoman Baertsch. Aye: Councilman Poduska, Councilman McOmber, Councilwoman Baertsch, Councilman Willden and Councilwoman Call. Motion was unanimous.

5. Final Plat for Ironwood (formerly Green Springs) located at approximately 1855 South Centennial Boulevard, Capital Assets, applicant.

a. Resolution R14-25 (5-6-14): addendum to the resolution of the City of Saratoga Springs amending the street lighting special improvement district to include additional subdivision lots. (Ironwood)

Sarah Carroll – the applicant requested on sewer easement, to approve current location or revised location (5 feet). They have not totally decided which location it will be. Staff recommends approval as proposed with conditions that it meets conditions of City Engineer and Fire Chief.
Councilwoman Baertsch - ok on most requirements. What they were referring to in their letter. They did have a couple items that will probably be covered by code requirements. Is the sewer line actually what they were referring to in her letter?
Sarah Carroll - it's a separate item. They are asking for details on how to access the offsite detention basin storm drain. It could be along Centennial and their landscape plan indicates they will do a hard surface along the detention to be cleared with golf course. An easement is included in plat also for storm drain.
Councilwoman Baertsch - wanted to verify that all permissions and easements were complied to?
Sarah Carroll - all agreements are in place; the easements are not yet recorded but will be before the final plat.
Jeremy Lapin - would be uncomfortable with City Council approving anything that involved engineering without him reviewing design.
Councilman McOmber - said the conditions include that it meets all engineering requirements so they would be covered.
Councilman McOmber - on the Corner lots, when we get individual building permits make sure that it meets setback requirements and other things.
Sarah Carroll - staff will make sure it will meet all code requirements.
Councilman McOmber - feels all conditions will be met.
Councilwoman Call - the easement in-between lots 24 and 21, notes the easement is to be dedicated, we need to make sure SSOA is accepting of it.
Jeremy Lapin- feels it would be better as a separate parcel so no fence would be built.
Kevin Thurman – the easement would cover no encroachment. Doesn't feel dedication is necessary, might be nice.
Councilwoman Call- wants to make sure those homeowners on that easement are fully aware of the easement; maybe place it on their title.
Sarah Carroll - a plan was sent today that noted the access would be through the golf course so the access would not be over lots, but the easement would still need to be there.
Councilwoman Call - the open space goes completely out to centennial so it could be accessed through there in perpetuity.
Councilman Poduska - concerns have been addressed already. Appreciating all parties concerned.
Mark Christensen - asked that comments be open to applicant to address issues. No comments were made.

Councilwoman Baertsch made a Motion to approve the Final Plat for Ironwood (formerly Green Springs) located at approximately 1855 South Centennial Boulevard, Capital Assets, applicant. And Resolution R14-25 dated today May 6, 2014: addendum to the resolution of the City of Saratoga Springs amending the street lighting special improvement district to include additional subdivision lots. (Ironwood) also including that the city engineer will determine the location of sewer and easement placement and all findings and conditions of staff and engineering. Seconded by Councilman Poduska. Aye: Councilman McOmber, Councilwoman Baertsch, Councilman Willden, Councilman Poduska and Councilwoman Call. Motion passed unanimously.

6. Preliminary Plat and Final Plat for Western Hills 1-C located between 200 West and 400 West Aspen Hills Boulevard, Ron Johnston, applicant.

a. Resolution R14-26 (5-6-14): addendum to the resolution of the City of Saratoga Springs amending the street lighting special improvement district to include additional subdivision lots. (Western Hills 1-C)

Sarah Carroll – this is the preliminary and final in same report. Original project approval expired. Development agreement is still in effect. Staff reports that it meets all city engineer and fire requirements. The applicant would like open space of 0.9 acres to be accredited to future development.
Councilman McOmber - has no problem with .9 acres being credited to future development because it's the same landowner.
Councilwoman Call - has no issues, also ok with future credit.
Councilman Poduska - does this mean we will be able to get crossing guard? Staff said Yes. He wondered how this fragmentation took place where church/school built.
Mark Christensen - noted it was purely a phasing issue. It's been a challenge with all of bonding requirements etc., it has been a complex project and they saw many demands throughout project.
Councilman Willden - happy with the park and to get going on it.
Councilman Baertsch - good.
Jeremy Lapin - they have already deeded all property for Shay Park.

Motion made by Councilwoman Baertsch to approve Preliminary Plat and Final Plat for Western Hills 1-C located between 200 West and 400 West on Aspen Hills Boulevard, Ron Johnston, applicant. And Resolution R14-26 dated today May 6, 2014: addendum to the resolution of the City of Saratoga Springs amending the street lighting special improvement district to include additional subdivision lots Western Hills 1-C) with all staff and engineering findings and conditions. Seconded by Councilman Willden. Aye: Councilman McOmber, Councilwoman Baertsch, Councilman Willden, Councilman Poduska and Councilwoman Call. Motion passed unanimously.

7. **Final Plat for Landrock Connection located at 1600 South 400 West, Clay Peck, applicant.**

a. Resolution R14-27 (5-6-14): addendum to the resolution of the City of Saratoga Springs amending the street lighting special improvement district to include additional subdivision lots. (Landrock Connection)

Mark Christensen - stated this item needed to be pulled from tonight's agenda. No certain time stated.

8. Final Plat for Sergeant Court Phase 3 located at 1675 North 95 West, Bach Homes, applicant.

a. Resolution R14-28 (5-6-14): addendum to the resolution of the City of Saratoga Springs amending the street lighting special improvement district to include additional subdivision lots. (Sergeant Court Phase 3)

Scott Langford - Continued item - Staff worked with applicant, approval expired, now seeking final plat approval, includes 41 town home units. Previous questions brought up by council addressed:

1. If continued in this phase, will the practice of fencing off common areas as private backyards create a development that does not meet the required minimum 25% open space? No.
   Scott Langford - Update to staff notes. As mixed use minimum is 25% but this has a PUD overlay which moved the requirement to **30%.** If all backyards are fenced the applicant calculated that it

would drop open space from 35.5% to 33.75%. Applicant can address how they got those numbers. If they don't hit 30% there may be a need to look at number of units.

2. Does the modification to the width of the existing landscaped median at the entrance to the development and additional fire lane striping provide sufficient emergency access? Answer: Per the explanation of the Fire Chief during the April 15th meeting. Yes.
   Scott Langford - Not the best case scenario, but they are improving what they control, the do not own property to the north.
3. Are all of the garages setbacks the required 20 feet, in order to provide driveways of sufficient depth to park a standard vehicle? Yes
4. Does the width of the private trail connection meet the minimum standards? Answer: yes. The public trail standards do not apply to private on-site paths.

Scott Langford - 3 different options in staff report for trails. There is nothing they feel they can really "hang their hat on" at this point.
Councilwoman Call - is curious as to how open space was calculated, quick calculations don't match applicants numbers. Does not like access for emergency issues, it's not well integrated. If SW corner was true cul-de-sac it could allow another unit and stub out to the north. She is not comfortable putting in another 41 units on the backside of the development where we've had emergency issues before.
Bruce Baird, for applicant - appreciated meeting with staff and working with all issues. They have run new plans and emailed them to Jeremy just this evening. It's not legal to fence those back yards, so feels the fenced area can't be counted against them. Two calculations were done on open space and on the first with 9x7.5' fenced porch they still wind up with 32.22% open space. With a bigger porch, 11'x12' feet still gives 30.65% open space. As to trail issue - They will put a trail in where City Council would like at request of staff, they don't care where to put it or not.
Councilman McOmber – indicated that we can't hold developer accountable for what future homeowners will do. Why isn't code enforcement making the illegal fences come down? They do meet all the requirements, so we need to go in and get the fences down, perhaps requiring it in the contract/title for the homeowners, that they can't have a fence. (Developer is happy to do so.) He has seen better advancements in city by getting yards put in by working with staff and all requirements. Likes the trail option in the corner, the most direct route. We inherited something not ideal and we all need to do the best we can. When development comes in to the north then we can re-address the connection between the two developments, esp. the secondary fire access.
Councilman Poduska - would like to recommend the corner trail. In the report he would like to note that all concerns of the city council were all answered and yet still delayed a month. Would like to recommend that in the future we don't table (postpone) an item but approve it with conditions that items in question be addressed and met. And if they are not met then the approval is denied. We need to be more business friendly and work with developers and not be delayed by a few questions that can be answered by staff.
Councilwoman Baertsch - thanked the staff for pros and cons on trail options, and for showing drives and demarcations. Still has a question on calculations. Also feels fences need to come down, and that it needs to go back to HOA to make sure they come down, it shouldn't be a police issue and if they don't take them down then the HOA should be fined. Trail - does not like 4 driveways coming together with trail, realizing it meets code. Second access, not ideal, but does meet code.
Councilman Willden- does not want to punish developer for fences, feels HOA should manage themselves. He likes the corner trail option (1). If Fire Chief is ok with address to fire code, he is alright with it.

Motion by Councilman McOmber to approve Resolution R14-28 dated today May 6, 2014 and Final Plat for Sergeant Court Phase 3 located at 1675 North 95 West, Bach Homes, applicant and the addendum to the resolution of the City of Saratoga Springs amending the street lighting special improvement district to include additional subdivision lots. (Sergeant Court Phase 3) including on the title for this phase that no fences are allowed in the backs of their property and all staff and

engineering findings and conditions. Seconded by Councilman Poduska. Aye: Councilman McOmber, Councilwoman Baertsch, Councilman Willden, Councilman Poduska. Nay: Councilwoman Call. Motion passes 4 to 1.

i. Councilwoman Call - would like on record that the reason for her vote is because she does not feel the development "promotes the health, safety, convenience and general welfare of the present and future inhabitants of the city."
ii. Councilwoman Baertsch – would like it on record - "Aye, only because it barely meets code."

9. Site Plan for West Saratoga Transportation Hub located at approximately 200 West 400 North, Alpine School District, applicant.

Sarah Carroll - review of plan, staff recommends approval with the conditions in report to be met.
Rob Smith for applicant - recommend approval as all requirements have been met.
Councilman Poduska - feels all requirements have been met and meets code, it's' good.
Councilman Willden - also feels it has met all requirements.
Councilwoman Baertsch - Thanks for working with us, not ideal location as a city but feels district has made it look good.
Councilman McOmber - likes landscaping plans, and going above on extra fascia on canopies etc. It makes it easier to talk to and explain to people. Feels like it will be a model facility.
Councilwoman Call- appreciates applicant working with us. Happy with landscaping. Question on retaining wall, center one by the drain.
Jeremy Lapin - noted it is actually going away.
Councilwoman Call – on the plan it says future buildings, making sure there are not temporary buildings, and thinks the city ought to define "earth tone" not red, general agreement.
Mayor Miller - thanks for all that was done to help.

Councilman Poduska made a motion to approve the proposed West Saratoga Transportation Hub Site Plan located at approximately 200 West 400 North, Alpine School District, applicant, subject to findings and conditions listed. Seconded by Councilwoman Call. Aye: Councilman McOmber, Councilwoman Baertsch, Councilman Willden, Councilman Poduska and Councilwoman Call. Motion passed unanimously.

Rob Smith - answer to question of completion time: hope to have it finished for Governors day for Military function.

Kevin Thurman - Point of Order - in rules of procedure, you first hear from staff, then applicant, then council comment. If there is public hearing then you hear from applicant a second time.

10. Concept Plan for Lakeside Estates located at approximately 2800-3000 South Redwood Road, Curtis Leavitt, applicant.

Sarah Carroll - Review of Plan.
Councilwoman Baertsch - clarification - with road coming in from Redwood Road, does it connect with wildlife blvd and where would it be?
Sarah Carroll - road will be stubbed to be completed at some time, to connect when future development comes in.
Councilman Poduska - individual homes along lakefront, wind-surfers use a point along there and wonders if there is access.

Sarah Carroll - shows access on plat in 3 locations. Cul-de-sac will have parking as well as lake access.
Councilman Poduska - recommends that it does stay preserved.
Sarah Carroll, clarification on possible road shift to line up with other subdivisions as per UDOT.
Councilman Willden- agrees with Planning Commission recommendations and agrees it will be great to have lake access there.
Councilwoman Baertsch - as long as driveways are as far as possible from Redwood Road it won't be as problematic. With open space with trail head at north end and w here none of the detention areas are very usable, wonders if they could be combined. A trail head would be more convenient nearer a main road, and not have as much traffic through so much of the neighborhood.
Councilman McOmber - if the road does move, he would like to see it go all the way through, with lots shifting as well and not jog, as it becomes a view corridor. There is already a development already called Lakeside, so it will need to be changed.
Councilwoman Call- asked on some of the open space is sensitive land so does credit still meet requirement?
Sarah Carroll - Sensitive lands can be up to ½ of required space.
Councilwoman Call - thanks to staff for reports that clarify. Agrees with Councilwoman Baertsch on trail head in the corner, feels neighbors would not like it. Appreciates incorporation of lake shore. Feels it's a great subdivision for the city.
Mike Kelly, Applicant - on trailhead, he is clarifying there are 3 trail head access, parking at the one on the end of view corridor. Another is a little north with no parking, and one on the end at the cul-de-sac where people can park off the road. What would council like to see in the trail heads
Councilwoman Baertsch - parking is necessary because it will draw people from all over. Perhaps move it from the cul-de-sac to a more efficient access area with less impact on residents. It might open view corridor more.
Councilwoman Call – they could maybe take out a lot and incorporate it into detention basin for trail/parking. We don't want to deprive developer of buildable lots but looking into the future we don't want residents complaining about too many people through the neighborhood and creating parking problems. She feels the developer has already done a great job with thinking of several access points. Glad that development is embracing the lake.
Sarah Carroll - asked applicant to explain their reason for choosing areas they did.
Mike Kelly - selected the location of trails based on the roadway, the detention basin, which is already a spot that needs little grade change, and the corner trail is based on configuration of lots.
Sarah Carroll - could the detention be moved and still provide drainage that is needed?
Councilwoman Call - on detention basin off center, could the front of it be parking stalls?
Mike Kelly - said if they would allow parking spaces that back onto street it would work better.
Jeremy Lapin – there is concern by Public Works because of road plows, but that was when the stalls were directly off asphalt, if there was an extended drive approach they may find it more acceptable. Council felt it should be looked into.
Sarah Carroll - basically the goal is to possibly create a park at the view corridor, increasing parking there and out of the cul-de-sac.
Councilwoman Call – if the north corner could be turned into building lot, she is suggesting that as a trade for other parking and a trail move.

11. <u>Amendments to contract with Shoreline Wetland and Cultural Resource Study.</u>

Jeremy Lapin – we awarded wetland contract to SWCA. Around $4,500 could be reimbursed total.
Councilman Poduska – asked if this had to do with recent government controls over waterways?
Jeremy Lapin - no, it's just taking advantage of a crew already here and helps us to understand what is possible in future development along the river. Total requested change amount is $8212 of which $4500 would be reimbursed to us.

Councilwoman Call- the $2500 is a grant, she is willing to help put together grant. The deadline is coming up soon. Remember the grant is not a done deal.
Mark Christensen - application is ready to go for the grant and will speak with Councilwoman Call tomorrow to go over the grants.
Councilwoman Baertsch – noticed on study area that it crosses over to Lehi, are we working with them?
Jeremy Lapin - they are responsible for notifying and documenting that, if homeowner denies access, they simply won't do that property. It is a more regional project with Jordan River Commission.
Councilwoman Call- speaking with consultants in phase 1 they informed us that they try to encompass all contiguous wet lands so they would not do just the Jordan River and west. This study is an asset to the Jordan River Commission and it helps our future build-ability.

Motion by Councilwoman Baertsch to approve adding a wetland and cultural resource survey of the Jordan River to the existing study in the amount of $8,212 to SWCA and instruct staff to seek after those grants as soon as possible. Councilwoman Call second, Aye: Councilman McOmber, Councilwoman Baertsch, Councilman Willden, Councilman Poduska and Councilwoman Call. Motion passed unanimously

12. Amendments to the Development Agreement and Reimbursement with SCP Fox Hollow, LLC.

Kevin Thurman - entered development agreement with SCP Fox Hollow, sometimes called Henry Walker Homes. It is separate LLC. dated November 2012. They agreed to start construction on Swainson Ave. and they have run up against a few things, mainly a pump station taking longer so they have asked for extension of time and have given city a schedule. Staff report that the developer has not received permits from the state to build yet, so obligation has not begun yet.
Mark Christensen - the need to build pond here is a necessity, part of the caveat of needing the pond was based on the number of permits they obtained and the number of permits would cap out based on using the tank for secondary water. They are not close to capping out in this extension time.
Councilman Poduska - residences have asked about Swainson ave. they would like to be able use for school access by next fall.
Jeremy Lapin – they have done a re-submission and will get it done soon. Completion is hoped to be done before school.

Motion by Councilman McOmber to approve the amendments to the Development Agreement and Reimbursement with SCP Fox Hollow, LLC. As outlined with all findings and conditions. Seconded by Councilman Willden. Aye: Councilman McOmber, Councilman Willden, Councilman Poduska, Councilwoman Baertsch and Councilwoman Call. Motion passed unanimously.

Discussion held.

Councilwoman Baertsch - one of the recommendations in report includes a condition to authorize the City Manager to sign with the condition that Developer deposit in escrow any outstanding amounts due per the Agreement.
Staff - that is part of the original agreement so in the conditions, you can clarify that when they receive building permits in the future that they deposit that in escrow.
Councilwoman Call- clarification, there is no obligation to date because they haven't received building permits yet?
Jeremy Lapin – this is just for the extension.

Councilman McOmber made Amended Motion to approve the amendments to the Development Agreement and Reimbursement with SCP Fox Hollow, LLC. As outlined with all findings and

conditions, *Including the recommendation in Staff report*. Seconded by Councilman Willden. Aye: Councilman McOmber, Councilwoman Baertsch, Councilman Willden, Councilman Poduska and Councilwoman Call. Motion passed unanimously

13. Approval of Reports of Action.

a. Kimber Gabryszak - Sergeant Court - Review of Action
   i. Councilwoman Call - in item 6 she would add "To meet open space requirements, no fences are allowed in the backs of the property, and the rule shall be recorded on the title."
b. Kevin Thurman - Ironwood
   i. Councilwoman Baertsch - did we want to include "no concerns raised by the public?" Because we did receive documentation by HOA.
   Kevin Thurman - City Council Discussion addressed those issues.

Motion to approve the Reports of Action by Councilman McOmber, Seconded by Councilwoman Baertsch. Aye: Councilman McOmber, Councilwoman Baertsch, Councilman Willden, Councilman Poduska and Councilwoman Call. Motion passed unanimously.

14. Staff and Council Reports

Owen Jackson - SPAC committee meeting Next Tues 6pm. Letters of notification went out today.
Councilwoman Call- Lehi Area Chamber has restructured some things so that every penny we give to them we get back through SSBA or in-kind services. She recommends continuing on with Lehi Chamber and not continuing with Utah Valley Chamber. Council members were in agreement.
Councilwoman Baertsch - Some concerns about end of trail in Aspen Hills, trail on South of aspen runs into canal. In the same area, there are tumble weeds blowing into yards, she reported that it was asked if fire dept, could practice field burning to cut down on tumbleweeds. There have been concerns from the residents of Sunset Haven that the Lacrosse teams have been using their field and are overwhelming to the neighborhood with parking and residences don't get to use the detention basin/park.
Councilman Willden - Mayor and he went to Camp Williams. They are a great partner and have put in a lot of effort to mitigate fire issues. It has been effective.

Councilwoman Baertsch made a motion to enter into closed session at 9:37 p.m. for the purchase, exchange, or lease of property, pending or reasonably imminent litigation, the character, professional competence, or physical or mental health of an individual. Seconded by Councilman McOmber. Aye: Councilman McOmber, Councilwoman Baertsch, Councilman Willden, Councilman Poduska and Councilwoman Call. Motion passed unanimously

Closed Session

Present: Mayor Miller, Councilman Willden, Councilwoman Baertsch, Councilman McOmber, Councilwoman Call, Mark Christensen, Lori Yates, Kevin Thurman, Spencer Kyle, Nicolette Fike

Closed Session Adjourned at 9:51p.m.

Motion to adjourn Policy Session, Motion passed unanimously.

Policy Meeting Adjourned at 9:51p.m

City Council
Staff Report

Author: **Chelese Rawlings, Finance Manager**
Subject: **Final Budget Fiscal Year 2014-2015**
& Certified Tax Rate for tax year 2014
Date: **June 17, 2014**
Type of Item: **Ordinance**

Summary Recommendation: Staff recommends approval of the City Manager recommended budget for fiscal year 2014-15 and the certified tax rate for tax year 2014.

Description

A. Topic

City Manager recommended budget for fiscal year 2014-15 and the tax year 2014 Saratoga Springs Certified Tax Rate of 0.002233.

B. Background

- December 31, 2013 - Budget requests were requested for fiscal year 2014-15 by all city departments.
- January 2-29, 2014 – Budget requests were compiled and reviewed by the Finance Manager.
- During the month of January meetings were held with the department head or employee submitting the request, the City Manager, the Assistant City Manager, and the Finance Manager. At this point all budget requests were discussed in great detail to determine if it was a viable request.
- January 31-February 1, 2014 – Tentative City Manager Recommended Budget overview was presented to City Council at the annual retreat.
- On April 1, 2014 – The Tentative Budget Document 2014-2019 was presented to council, and the 2014-2015 City Manager recommended budget was also given to council at this time.
- April 29, 2014 –Discussion on Budget
- June 3, 2014 – an updated Tentative Budget Document 2014-2019 was presented to council, with discussion on budget.

C. Analysis

The budget formalizes the City's resolve to remain fiscally and legally responsible.

Recommendation: Staff recommends approval by ordinance of the City Manager recommended budget for fiscal year 2014-15 and the certified tax rate for the tax year 2014.

Single Levy Certified Tax Rate Worksheet Report 713	Form PT-713 pt-713.xls Rev. 3/10

County: UTAH

Tax Year: 2014

Taxing Entity: 3075 SARATOGA SPRINGS CITY

Levy/Fund: 10 General Operations

1. Last year's property tax budgeted revenues and adjustments.		
A. Last year budgeted revenues	$1,899,270	
B. Redemptions and revenue adjustments	$25,581	
C. Line 1A plus or minus any adjustment on line 1B	$1,873,689	
2. Adjusted value on tax rolls (from column 7 of Report 697		$1,023,663,412
3. Local assessed real and centrally assessed BOE adjustments		
a. Real property taxable value (from column 2 of Report 697)	$994,355,932	
b. 3-Year real property BOE average rate	0.004850	
c. Real property BOE adjustment	$4,822,626	
d. Centrally Assessed taxable value (from col. 4 of Rpt. 697)	$15,622,482	
e. 3-Year centrally assessed BOE average rate	0.000000	
f. Centrally assessed BOE adjustment	$0	
g. Total BOE adjustments	$4,822,626	
4. Sum of valuations (line 2 less line3g)		$1,018,840,786
5. Five-year average tax collection rate		88.38%
6. Proposed tax rate value (line 4 multiplied by line 5)		$900,451,487
7. New growth (from column 7 of Report 712A)		$69,583,920
8. Adjusted new growth (line 7 multiplied by line 5)		$61,498,268
9. Current year adjusted value (line 6 less line 8)		$838,953,218
10. **Certified tax rate** (line 1C divided by line 9)		0.002233

Certification by County Auditor

I, _____, as County Auditor, do hereby certify that I have examined the information submitted on this statement and have found it to be true and correct.

Signature: _____ Date: _____

Multiple Levy Certified Tax Rate Worksheet Report 713B	Form PT-713B pt-694b.xls Rev. 3/10

County: UTAH **Tax Year:** 2014

Entity: 3075 SARATOGA SPRINGS CITY

A. Certified tax rate value minus new growth (from 713A line 8) $838,953,218

1. Budget Type	2. Last Year's Budgeted Revenues	3. Adjustments and Redemptions	4. Adj. Last Year's Budgeted Revenue	5. Certified Tax Rate (Col. 4/A)
10 General Operations	$1,899,270	-$290,376	$2,189,646	0.002233

Certification and Signature

I, _____, as County Auditor, do hereby certify that I have examined the information submitted on this statement and have found it to be true and correct.

Signature: _____ Date: _____

ORDINANCE 14-15 (6-17-13)

AN ORDINANCE ADOPTING THE CITY OF SARATOGA SPRINGS MUNICIPAL BUDGET FOR FISCAL YEAR 2013-2014, TAX RATE, ADOPTING A PAY PLAN, AND ESTABLISHING COMPENSATION FOR ITS ELECTED AND APPOINTED OFFICIALS; AND ESTABLISHING AN EFFECTIVE DATE.

WHEREAS, pursuant to Utah Code § 10-6-114, the City Council for the City of Saratoga Springs, Utah has conducted a public hearing on the proposed fiscal year 2014-2015 municipal budget and published advance notice of the public hearing as required; and

WHEREAS, pursuant to Utah Code § 10-6-133, the City Council is required to set the property tax levy for the fiscal year 2014-15; and

WHEREAS, the fiscal year 2014-15 municipal budget includes a proposed Pay Plan for employees of the City of Saratoga Springs; and

WHEREAS, pursuant to Utah Code § 10-3-808, the City of Saratoga Springs has published notice of the adoption of compensation of elected and appointed officials and has held a public hearing as required; and

WHEREAS, pursuant to Utah Code § 10-6-118, the City Council now wishes to adopt, with amendments, the proposed fiscal year 2014-2015 budget, Pay Plan, and compensation for elected and appointed officials.

NOW THEREFORE, BE IT ORDAINED BY THE LEGISLATIVE BODY OF THE CITY OF SARATOGA SPRINGS, UTAH, THAT:

1. The City of Saratoga Springs, Utah hereby adopts the municipal budget for fiscal year 2014-2015 as set forth herein and attached hereto.

2. The City of Saratoga Springs hereby adopts the Pay Plan for fiscal year 2014-2015 as set forth herein and attached hereto.

3. The City of Saratoga Springs hereby adopts compensation for its appointed and elected officials for fiscal year 2014-2015 as set forth herein and attached hereto.

4. The City of Saratoga Springs adopts the property tax rate of .002233 for the fiscal year 2014-15.

5. This ordinance shall take effect upon publication as required by the Utah Code and be effective on July 1, 2014 for the fiscal year 2014-2015.

ADOPTED AND PASSED by the Governing Body of the City of Saratoga Springs, Utah, this 17th day of June, 2014.

CITY OF SARATOGA SPRINGS
A UTAH MUNICIPAL CORPORATION

Signed: _____
Jim Miller, Mayor

Attest: _____ _____
Lori Yates, City Recorder Date

City Council
Staff Report

Community Plan and Village Plan
Legacy Farms
Tuesday, June 17, 2014
Public Hearings

Report Date:	Tuesday, June 10, 2014
Applicant:	D.R. Horton
Owner:	Corporation of Presiding Bishopric Church of Jesus Christ of LDS
Location:	SE corner intersection of Redwood and 400 south, extending to Saratoga Dr.
Major Street Access:	Redwood Road and 400 South
Parcel Number(s) & Size:	66:058:0007, 176.44 acres; 58:041:0185, 5.497 acres Total: 181.937 acres
Parcel Zoning:	Planned Community (PC)
Adjacent Zoning:	PC and Low Density Residential (R-3)
Current Use of Parcel:	Agriculture
Adjacent Uses:	Agriculture, Residential
Previous Meetings:	PC Work Sessions December 12, 2013 and January 9, 2014 CC Work Session January 14, 2014 PC Public Hearings February 13, 2014 PC Work Session April 24, 2014 CC Work Session May 6, 2014 PC Hearings June 12, 2014
Previous Approvals:	Annexation Agreement (2010) Rezone to PC zone (2010) City Center District Area Plan (2010)
Land Use Authority:	City Council
Future Routing:	City Council
Author:	Kimber Gabryszak, Planning Director

A. EXECUTIVE SUMMARY

The applicants are requesting approval of a Community Plan and Village Plan pursuant to Section 19.26 of the Land Development Code (Code) and the City Center District Area Plan (DAP). The proposal allocates a maximum of 1000 units of density to ~182 acres within the DAP.

The Community Plan lays out the broader guidelines for the development while the Village Plan provides the specifics for the first phase of development. The application proposes the use of Form Based Code to implement specific standards for blocks, subzones, unit layout and type, transition of density, building setbacks, architecture, roadways, open space, landscaping, lighting, and other applicable standards.

The Planning Commission held public hearings on the Community Plan and Village Plan on February 13, 2014, and voted on the proposals. Due to significant changes in the layout stemming from the relocation of the school site, the applicants have requested additional hearings on the revised plans. For the

Kimber Gabryszak, AICP, Planning Director
kgabryszak@saratogaspringscity.com
1307 North Commerce Drive, Suite 200 • Saratoga Springs, Utah 84045
801-766-9793 x107 • 801-766-9794 fax

convenience of the Council, significant changes to this report since the previous hearings and work sessions are highlighted in yellow.

The Planning Commission is scheduled to hold two hearings on the Community Plan and Village Plan on June 12, 2014. Due to the timeframe, their meeting will be held after this report is complete. A report of action on the Commission's recommendations will be provided to the Council prior to the Council hearings.

Staff recommends that the City Council conduct two public hearings, take public comment, review and discuss the proposed Community Plan and Village Plan 1, and choose from the options in Section I of this report. Options include approval or denial for either or both the Community Plan and Village Plan as proposed, approving either or both with changes as directed by the Council, or continuing the hearings to another date with specific direction to the applicant on information or changes needed for the Council to make decisions.

B. BACKGROUND

The City Center District Area Plan (DAP) was approved in 2010 following annexation of just under 3000 acres into the City. As part of the annexation agreement and DAP, the 2883 acres is approved and vested for 16,000 residential units and 10,000,000 square feet of non-residential density:

Land Use Table

Type of Land Use	Quantity
Residential Housing	16,000 Units
Non-residential Area	10 million sq. ft.
Equivalent Residential Units	20,620 Units

The DAP has also approved Place Types ranging in density from 5-75 dwelling units per acre:

Place Types	Dwelling Unit Density Range	Range of FAR *
Urban Center	14-75	0.39–2.34
Transit Oriented Development	8–75	1.25–2.4
Town Neighborhood	6–34	0.36–1.82
Business Park	0	0.39–0.93
Office Warehouse	0	0.39–0.93
Neighborhood Commercial	5–14	0.39–1.5
Regional Retail	0	0.36–0.47
Traditional Neighborhood	5 –32	0.47–1.04
Master Planned Subdivision	4–14	0.35–0.50
Resort/Hospitality	6–8	.36–.93

* FAR = Floor Area Ratio

(Note: the complete DAP can be found by visiting www.saratogaspringscity.com/planning and clicking on "Master Plans" and then "City Center District Area Plan.")

While the DAP includes several conceptual scenarios for the distribution of various place types, both the DAP and Code allow the place type for individual developments to be identified and finalized at the time of Community Plan approval.
The DAP does not specify how to allocate the 16,000 Residential and 10,000,000 s.f. of non-residential development (total of 20,620 Equivalent Residential Units, or ERUs) to each phase, however there are several methods that may act as guidelines:

- The Traditional Neighborhood Place Type under the DAP would permit a range of 900-5760 units.
- Utilizing a "fair share" approach, imagining that the combined 20,620 residential and commercial ERUs were allocated evenly across the entire DAP, the ~182 acre Community Plan would be eligible for up to approximately 1300 units, a density of over 7 units per acre. (Note: the DAP does not require density to be evenly allocated across the property. Some phases will be denser while others are less dense.)
- The Community Plan proposes block-specific limits for densities, further decreasing the potential density range to 842-1782.
- The applicants are requesting a maximum of 1055 ERUs, consisting of a maximum of 1000 residential units and 55 non-residential unit equivalents in the school and church sites.

C. SPECIFIC REQUESTS

Community Plan
The Community Plan covers the entire ~182 acre project, and the applicants are proposing the Traditional Neighborhood place type for the entire Community Plan.

The applicants are proposing a maximum limit of 1000 residential units on the entire property, governed by the Community Plan. The 1000 unit limit is well below the maximums achievable in the Traditional Neighborhood place type and with the proposed Block Types. The applicants are proposing a layout and distribution of units would result in approximately 900 residential units, but could be increased to 1000.

Village Plan 1
Village Plan 1 covers the western blocks of the Community Plan and contains ~50 acres. Within this first Village Plan, the applicants are proposing a maximum of 309 residential units. Village Plan 1 contains several higher density blocks closer to Redwood and 400 South, and therefore contains a higher proportion of the density than the remaining Village Plans to come. As the project moves away from Redwood Road, future Village Plans will transition to a lower density. In no case will more than 1000 residential units be permitted in the entire Community Plan area.

The layout presented to the Commission on February 13, 2014 showed a school in the northeastern portion of the development. Due to concerns of the school district based upon recent experiences developing in Lehi, the district has requested that the school site be relocated internally to the development. As a result, the unit layout has changed significantly. The applicant is proposing that an age-restricted senior community replace the area formerly occupied by the school.

D. PROCESS / HOW IT WORKS

Section 19.26 of the Code describes development in the PC zone, and the graphic to the right on the next page shows the hierarchy of the different plans:

1. For a large-scale planned community district, an overall governing document is first approved, known as the District Area Plan (Section 19.26.13).
    - *The City Center DAP was approved in 2010.*

2. A Community Plan is then proposed and approved (Sections 19.26.03-19.26.08). The Community Plan lays out the more specific guidelines for a sub-district within the DAP.
    - *The Legacy Farms Community Plan will govern only the ~182 acres of the Legacy Farms development.*

3. Following and / or concurrently with the Community Plan, a Village Plan is proposed and approved (Sections 19.26.09 – 19.26.10). The Village Plan is the final stage in the Planned Community process before final plats, addressing such details specific to the sub-phase as open space, road networks, and lots for a sub-phase of the Community Plan.
    - *The applicants are currently proposing Village Plan 1 for the westernmost blocks (47.95 acres) of the Community Plan.*

The approval process for the Community Plan and Village Plan 1 includes:

1. A public hearing and recommendation by the Planning Commission
2. A public hearing and final decision by the City Council (19.26 states that the process is per Section 19.17, which is Code amendments / rezones, and requires hearings with the Council.)

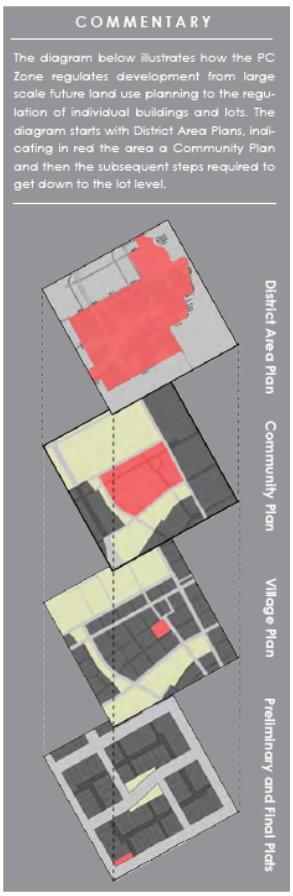

E. COMMUNITY REVIEW

These items were noticed as public hearings in the *Daily Herald*; and mailed notice sent to all property owners within 300 feet.

A community open house was also held at which time neighbors and City residents had the opportunity for an initial look at the proposed development, and previous hearings were held by the Planning Commission on February 13, 2014. Work sessions were held with the Commission and Council on this revised layout in April and May 2014, and public hearings with the Commission on June 12, 2014.

F. REVIEW

Place Type

The Community Plan designates the entire ~182 acre Legacy Farms development as Traditional Neighborhood, which is described in the DAP as follows:

TRADITIONAL NEIGHBORHOOD

Range of Average Dwelling Units/Acre	5–32 du/ac
Range of Average FAR	0.47–1.04
Range of Open Space	18 - 24%

Open Space Types:

- Plaza
- Entrance park
- Pocket park
- Neighborhood park
- Community park
- Regional park
- School park
- Sports complex
- Special use
- Community garden
- Parkway (Boulevard)
- Greenway

Traditional neighborhoods in this district are medium-density residential areas typically comprised of many small lot single-family dwellings, some townhomes and small scale apartments. Houses in these neighborhoods are close enough to the street to encourage interaction among neighbors and create a "front porch" culture. Houses are closer together and on smaller lots than in a master planned subdivision. There are small neighborhood serving parks and connections to trails. Street connectivity is relatively favorable, allowing for a walkable environment and transit options. On-street parking slows traffic and creates a buffer between traffic and pedestrians on the sidewalks.

Density
The Community Plan proposes a maximum of 1000 residential units, and 55 non-residential unit equivalents, which results in an average of ~5.8 units per acre. The distribution of units is not even, however, with some blocks containing larger lots and other blocks containing small lots, twin homes, and townhomes. Such a varied distribution is allowed and contemplated by the DAP.

The densities of adjacent existing residential properties (to the south) contain approximately 3.5 – 5 units per acre. To transition density appropriately within the Legacy Farms development, the Community Plan and Village Plan propose 10,000 s.f. and 8,000 s.f. lots in the blocks closest to these existing neighborhoods, with lot size decreasing and densities increasing as the blocks move north and farther away from these existing neighborhoods.

Unit Type
Legacy Farms proposed a mixture of large-lot single family homes, small-lot and cottage single family homes, twin homes, and several types of townhomes. The DAP anticipated and permitted this type of development. While also permitted by the DAP, "small scale apartments" have been removed from the proposal.

Traffic and Infrastructure
The applicants have provided a traffic study and infrastructure plans, which were previously reviewed by the City Engineer. Due to the changes, a revised traffic study is required. (See Engineer's report.)

Form Based Code / Development Standards
City Staff has been working with the applicants on the governing standards and principles of the project, which are contained in the Community Plan and Village Plan 1.

The Community Plan contains the general standards for the entire ~182 acre project:

- Community Plan Process
- Place Type Designation
- Block Types
- Transition in density from existing residential development
- Equivalent Residential Unit (ERU) allocation
- Thoroughfare Plans (street / road standards)
    - Frontage Types
    - Utility Easements
    - Turning Radii
    - Pedestrian Crossings
    - Planting Information
- Parking
- Lighting Standards
- Architectural Styles
- Open Space types and conceptual layout
- Landscape Guidelines
- Signage Standards
- Fencing Standards
- Phasing
- Infrastructure
- Constraints

- Traffic Study – revised needed
- Definitions

Village Plan 1 contains additional standards to implement the Community Plan on a particular sub-phase. While these topics were addressed at a higher level in the Community Plan, the information in the Village Plan is more specific and applies only to the 47.95 acres contained in the Village Plan:

- Village Plan Process
- Sub-districts
- Private Frontages
- Conceptual Lotting Plan (lot layout)
- Product types (10,000 s.f. lots, 8,000 s.f. lots, 6,000 s.f. lots, cottages and rear lane cottages, twin homes, and several townhome types)
- Thoroughfares
- Street Names
- Pedestrian Plan
- Architectural details / materials
- Color Palette
- Open space
- Phasing
- Infrastructure and Utilities

Staff Review

Several remaining items identified by Staff need to be corrected or clarified prior to final signature of the CP and VP. These include items such as the following:

- Typos such as incorrect numbers, and percentages and acreages that do not total 100%
- Clarifications on where on-street parking is encouraged and prohibited
- Protection of clear-view triangles on corner lots
- Shared-lane townhomes that access on a main street need to access a shared lane
- Other clarifications and minor edits

More detail on the standards above are found in the proposed Legacy Farms Community Plan and Village Plan 1, obtained by visiting www.saratogaspringscity.com/planning, and clicking on "pending applications". Both the original version and the new proposals are available.

G. GENERAL PLAN

The General Plan Land Use map identifies this area as Planned Community, which states:

> k. **Planned Community.** The Planned Community designation includes large-scale properties within the City which exceed 500 acres in size. This area is characterized by a mixture of land uses and housing types. It is subject to an overall Community Plan that contains a set of regulations and guidelines that apply to a defined geographic area. Required Village Plans contain regulations that apply to blocks of land and provide specific development standards, design guidelines, infrastructure plans and other elements as appropriate. Development in these areas shall contain landscaping and recreational features as per the City's Parks, Recreation, Trails, and Open Space Element of the General Plan.

The 2883 acre DAP was approved in 2010 in compliance with the General Plan and the intent of the Planned Community designation. The proposed Community Plan includes trail connections and parks in compliance with the related master plans, and a mixture of housing types.

H. CODE CRITERIA

The property is zoned PC, and is subject to the standards and requirements in Section 19.26 of the Code, and its several sub-sections.

19.26.04 – Uses Permitted within a Planned Community District

- The application includes multi-family and single family homes, school and church sites, parks, and trails. All of these uses are permitted in the PC zone.

COMMUNITY PLAN CODE REQUIREMENTS

Section 19.26.06 – Guiding Standards of Community Plans

The standards for a Community Plan are below:

1. Development Type and Intensity. The allowed uses and the conceptual intensity of development in a Planned Community District shall be as established by the Community Plan.

   Staff finding: complies. *Subdivision plats and building permits will be reviewed for compliance with the Community Plan.*

2. Equivalent Residential Unit Transfers.

   Staff finding: complies. *The Community Plan contains a maximum of 1000 units, and a provision for density to be transferred between Village Plans in the development.*

3. Development Standards. Guiding development standards shall be established in the Community Plan.

   Staff finding: complies. *The Form Based Code in the Community Plan has established common standards and architectural guidelines, and will be the governing standards for the development. Any conflicts between the Code and the Community Plan will be governed by the Community Plan, while any topics not addressed in the Community Plan will be governed by applicable regulations and standards of the City. A discussion of private vs. semi-private fencing along trail corridors and open space was not fully resolved at the Commission hearings and work sessions with the Commission and Council.*

4. Open Space Requirements.

   Staff finding: complies. *While the Code currently requires 30% open space, it allows DAPs to include a lower range. The City Center DAP is the governing document for the proposed Community Plan, and the proposed open space meets the standards and range of 18-24% as identified in the DAP.*

5. No structure (excluding signs and entry features) may be closer than twenty feet to the peripheral property line of the Planned Community District boundaries.
   a. The area within this twenty foot area is to be used as a buffer strip and may be counted toward open space requirements, but shall not include required back yards or building set back areas.
   b. The City Council may grant a waiver to the requirement set forth in this Subsection upon a finding that the buffer requirement will result in the creation of non-functional or non-

useable open space area and will be detrimental to the provision of useful and functional open space within the Project.

Staff finding: up for discussion. *The applicants have requested a waiver to this requirement to allow them to provide a trail corridor along Sherwood Drive instead of a buffer at the back of homes. The Commission was split in their discussion of this request during the February 13, 2014 hearing, and also the Council at the most recent work session.*

19.26.07 – Contents of Community Plans

The items summarized below are required to be part of a Community Plan:

1. Legal Description. ***Provided***
2. Use Map. ***Provided***
3. Buildout Allocation. ***Provided***
4. Open Space Plan. ***Provided***
5. Guiding Principles. ***Provided***
5. Utility Capacities. ***Provided***
6. Conceptual Plans. Other elements as appropriate - conceptual grading, wildlife mitigation, open space management, hazardous materials remediation, fire protection. ***Provided***
8. Additional Elements.
    a. responses to existing physical characteristics of the site ***Provided***
    b. findings statement ***Provided***
    c. environmental issues ***Provided***
    d. means to ensure compliance with standards in Community Plan ***Provided***
9. Application and Fees. ***Provided***

19.26.05 – Adoption and Amendment of Community Plans

The criteria for adoption of a Community Plan are below:

a. is consistent with the goals, objectives, and policies of the General Plan, with particular emphasis placed upon those policies related to community identity, distinctive qualities in communities and neighborhoods, diversity of housing, integration of uses, pedestrian and transit design, and environmental protection;

Staff finding: complies. *See Section G of this report.*

b. does not exceed the number of equivalent residential units and square footage of nonresidential uses of the General Plan;

Staff finding: complies. *The General Plan does not identify ERUs or square footage, however the DAP does. The project is well below the maximum allowed per the DAP.*

c. contains sufficient standards to guide the creation of innovative design that responds to unique conditions;

Staff finding: complies. *The proposed standards are innovative and will permit the proposed densities and maintain quality of design.*

d. is compatible with surrounding development and properly integrates land uses and infrastructure with adjacent properties;

Staff finding: complies. *Adjacent developed residential properties contain similar densities to those densities proposed along the southern edge of the development, and the proposal transitions into higher density only once no longer adjacent to existing residential areas.*

e. includes adequate provisions for utilities, services, roadway networks, and emergency vehicle access; and public safety service demands will not exceed the capacity of existing and planned systems without adequate mitigation;

Staff finding: complies. *The applicants have provided information to staff for review, however finalization of the utility plan is awaiting finalization of the Tickville Wash floodplain remediation and determination with FEMA. The applicants request that the Council consider taking action with conditions concerning the utilities and floodplain. Staff has worked out sufficient detail, and is confident that remaining details will be finalized prior to preliminary plat approvals.*

f. is consistent with the guiding standards listed in Section 19.26.06; and

Staff finding: up for discussion. *The application complies with standards 1-4, however the project is requesting an exemption from standard 5.*

g. contains the required elements as dictated in Section 19.26.07.

Staff finding: complies. *The application contains the minimum required items.*

VILLAGE PLAN CODE REQUIREMENTS

19.26.03.2 – Additional Village Plan Requirements

Additional requirements for a Village Plan are summarized below:

a. A detailed traffic study - ***Provided. Revised study needed due to plan changes.***
b. A map and analysis of backbone infrastructure systems - ***Provided.***
c. Detailed architectural requirements and restrictions - ***Provided***
d. If applicable, details regarding the creation of an owners' association, master association, design review committee, or other governing body. - ***Provided.***

19.26.09 – Village Plan Approval

The criteria for a Village Plan approval are summarized below:

a. is consistent with the adopted Community Plan;

Staff finding: mostly complies. *The Village Plan has been reviewed for compliance with the densities, uses, block types, conceptual layout, and standards of the Community Plan. Some of the shared lane townhomes do not access a shared drive and need to be modified.*

b. does not exceed the total number of equivalent residential units dictated in the adopted Community Plan;

Staff finding: complies. *The proposed density for Village Plan 1 is a maximum of 309 units. This falls within the density ranges contemplated in the Community Plan for the Block Types in the Village plan. Regardless, in no case may the density in the entire Community Plan exceed 1000 residential unit equivalents, 1055 including the nonresidential portion.*

c. for an individual phase, does not exceed the total number of equivalent residential units dictated in the adopted Community Plan unless transferred per the provisions of the Community Plan;

> ***Staff finding: complies.*** *The densities within the phases also comply with the density ranges for the Block Types of each phase.*

d. is consistent with the utility, infrastructure, and circulation plans of the Community Plan; includes adequately sized utilities, services, and roadway networks to meet demands; and mitigates the fair-share of off-site impacts;

> ***Staff finding: can comply.*** *The street layout and utility plans are consistent with the plans provided in the Community Plan. Staggered intersections may need minor modification. The drainage and storm water plans are still being finalized.*

e. properly integrates utility, infrastructure, open spaces, pedestrian and bicycle systems, and amenities with adjacent properties; and

> ***Staff finding: complies.*** *The project properly integrates utility and infrastructure; discussion was held on pedestrian and bicycle systems and the integration of such systems with adjacent properties and they were found to be consistent. Most parks and open spaces are intended for the Legacy Farms community and are not public.*

f. contains the required elements as dictated in Section 19.26.10.

> ***Staff finding: in process.*** *See below. Nearly all required topics have been included, and remaining topics are being prepared by the applicant.*

19.26.10 – Contents of a Village Plan

The required contents of a Village Plan are summarized below:

1. Legal Description - ***Provided***
2. Detailed Use Map - ***Provided***
3. Detailed Buildout Allocation - ***Provided***
4. Detailed Development Standards - ***Provided***
5. Design Guidelines - ***Provided***
6. Owners' / Governing Associations - ***Provided***
7. Phasing Plan - ***Provided***
8. Lotting Map - ***Provided***
9. Landscaping Plan - ***Provided***
10. Utility Plan - ***Pending***
11. Vehicular Plan - ***Provided***
12. Pedestrian and Bicycle Plan - ***Provided***
13. Additional Detailed Plans. Other elements as necessary (grading plans, storm water drainage plans, wildlife mitigation plans, open space management plans, sensitive lands protection plans, hazardous materials remediation plans, and fire protection plans) **-** ***Provided***
14. Site Characteristics - ***Provided***
15. Findings Statement - ***Provided***
16. Mitigation Plans. (Protection and mitigation of significant environmental issues) - ***Pending***
17. Offsite Utilities - ***Pending***
18. Development Agreement – ***Pending (draft provided to applicants for revision)***

I. Recommendation and Alternatives:

The Planning Commission hearings are scheduled to occur after the drafting of this report, on June 12. A Report of Action for these hearings will be provided to the Council prior to the Council hearings; the options below may be modified based on the Commission's recommendations.

Staff recommends that the City Council conduct two public hearings, take public comment, review and discuss the proposed Community Plan and Village Plan 1, and choose from the options below.

Note that the Council may choose to select the same option for both the Community Plan and Village Plan or may choose to take separate actions on each application. For example, the Council could choose approve only the Community Plan and continue only the Village Plan, or choose continue both the Community and Village Plans, or make other combinations of the Council's choice.

Option 1 – Approvals
"I move to **approve** the Legacy Farms Community Plan with the Findings and Conditions below:"

Findings

1. The application complies with the City Center District Area Plan (DAP). Specifically, the neighborhood type, required contents, density, and unit type are as permitted in the DAP.
2. With appropriate modifications, the application complies with Section 19.26.05 of the Development Code as outlined in Section H of the Staff report, which section is incorporated by reference herein. Particularly:
    a. The application is consistent with the goals, objectives, and policies of the General Plan, through particular emphasis placed upon policies related to community identity, distinctive qualities in communities and neighborhoods, diversity of housing, integration of uses, pedestrian and transit design, and environmental protection;
    b. The 1055 units maximum does not exceed the number of equivalent residential units and square footage of nonresidential uses of the General Plan;
    c. The application contains sufficient standards to guide the creation of innovative design that responds to unique conditions;
    d. The application is compatible with surrounding development and properly integrates land uses and infrastructure with adjacent properties;
    e. The application includes adequate provisions for utilities, services, roadway networks, and emergency vehicle access; and public safety service demands will not exceed the capacity of existing and planned systems without adequate mitigation;
    f. The application is consistent with the guiding standards listed in Section 19.26.06; with the exception of an approved exemption from standard 5.
    g. The application contains the required elements as dictated in Section 19.26.07.

Conditions:

1. All requirements of the City Engineer shall be met.
2. All requirements of FEMA shall be met.
3. The Community Plan shall be edited as directed by the Council, including correction of typos and inconsistencies as identified by Staff.
4. Any additional conditions articulated by the Council: _____.
5. _____

"I also move to **approve** the Legacy Farms Village Plan 1 with the Findings and Conditions below:"

Findings

1. The application is consistent with the guiding standards in the Legacy Farms Community Plan. Specifically, the density, unit types, block types, thoroughfares, and other standards are expressly as contained in the Community Plan.
2. The application complies with the criteria in section 19.26.09 of the Development Code, as articulated in Section H of the Staff report, which section is incorporated by reference herein. Particularly:
    a. With appropriate modifications, the application is consistent with the adopted Community Plan;
    b. The range of density in the application does not exceed the total number of equivalent residential units dictated in the adopted Community Plan;
    c. For an individual phase, the density will not exceed the total number of equivalent residential units dictated in the adopted Community Plan unless transferred per the provisions of the Community Plan;
    d. The application is consistent with the utility, infrastructure, and circulation plans of the Community Plan; includes adequately sized utilities, services, and roadway networks to meet demands; and mitigates the fair-share of off-site impacts.
    e. The application properly integrates utility, infrastructure, open spaces, pedestrian and bicycle systems, and amenities with adjacent properties**;** and
    f. The application contains the required elements as dictated in Section 19.26.10.

Conditions:

1. All requirements of the City Engineer shall be met.
2. All requirements of FEMA shall be met.
3. The Village Plan shall be amended as directed by the Council, including correction of typos and inconsistencies as identified by Staff.
4. Any other conditions as articulated by the Council_____.
5. _____

Option 2 - Continuance

"I move to **continue** both items to another meeting, with direction to the applicant and Staff on information and / or changes needed to render a decision, as follows:

1. _____
2. _____
3. _____
4. _____
5. _____

Option 3 – Denial

"I move to **deny** the Legacy Farms Community Plan with the Findings below:

1. _____
2. _____
3. _____
4. _____
5. _____

"I also move to **deny** the Legacy Farms Village Plan with the Findings below:

1. _____
2. _____
3. _____
4. _____
5. _____

I also move to continue the final decisions to a future meeting, on June 26th, and direct Staff to return with official Findings as outlined in my motion."

J. Attachments:

A. Location & Zone Map (page 14)
B. Aerial Photo (page 15)
C. City Engineer's Report dated June 5, 2014 (pages 16-20)
D. City Engineer's Traffic Report dated April 8, 2014 (pages 21-24)
E. February, 2014 Community Plan Layout (page 25)
F. May, 2014 Revised Community Plan Layout (page 26)
G. February, 2014 Village Plan Layout (page 27)
H. May, 2014 Revised Village Plan Layout (page 28)
I. Community Plan: www.saratogaspringscity.com/planning, then "Pending Applications"
J. Village Plan: www.saratogaspringscity.com/planning, then "Pending Applications"

Zoning & Planning

Exhibit A

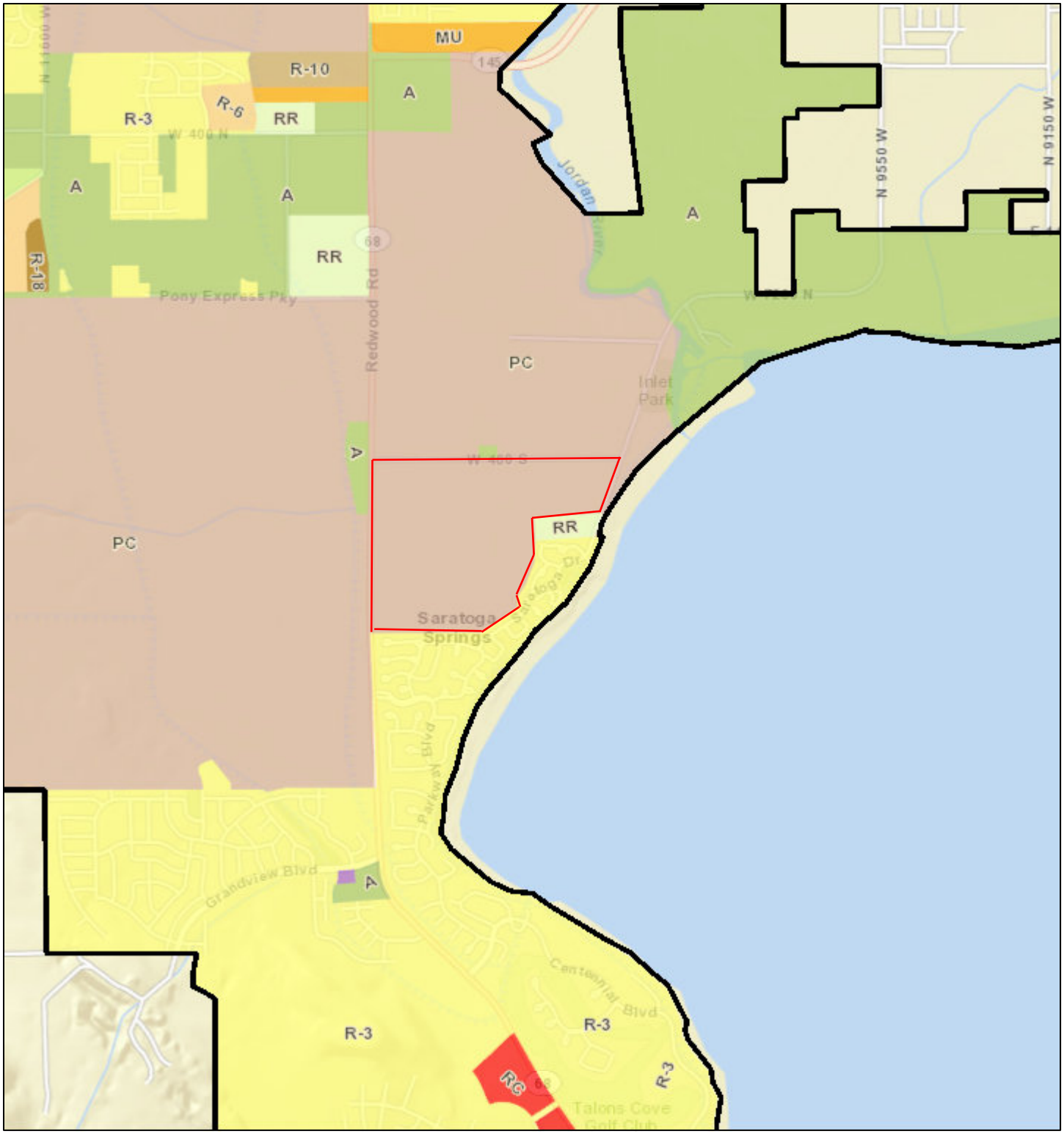

February 11, 2014

1:36,112

City Boundary

0 0.3 0.6 1.2 mi

0 0.5 1 2 km

Sources: Esri, DeLorme, NAVTEQ, USGS, Intermap, iPC, NRCAN, Esri Japan, METI, Esri China (Hong Kong), Esri (Thailand), TomTom, 2013

SaratogaSprings

Exhibit B

Exhibit C

City Council
Staff Report

Author: Jeremy D. Lapin, City Engineer
Subject: Legacy Farms Community/Village Plan
Date: June 12, 2014
Type of Item: Community/Village Plan Approval

CITY OF SARATOGA SPRINGS

Description:

A. Topic: The Applicant has submitted a community plan application. Staff has reviewed the submittal and provides the following recommendations.

B. Background:

Applicant:	*D.R. Horton*
Request:	*Community and Village Plan Approval*
Location:	*Area east of Redwood Road and South 400 South*
Acreage:	*181.937 acres*

C. Recommendation: Staff recommends the approval of community plan subject to the following findings and conditions:

D. Conditions:

1) The developer shall comply with all UDOT access permitting requirements. A permit for all points of access along Redwood Road shall be obtained from UDOT. Redwood Road is a Category 4 roadway and as such all access points, signalized or other, must meet UDOT's standards for that roadway classification. Developer shall complete the half-width improvements along Redwood Road (Principal Arterial) and 400 South (Collector) as per the City's Transportation Master Plan (TMP) and Engineering standards and specifications.

2) The submitted Traffic Impact study prepared by Hales Engineering dated August 2013 needs to be updated to reflect changes to the plan that have occurred since it was completed including, but not limited to, the new school location and the senior living community. Furthermore it identifies that the intersection of 400 South and Redwood road will require a signal in the future to mitigate the traffic impacts from this project. This intersection is not currently identified on the cooperative agreement between UDOT and Saratoga Springs dated October 28, 2008 (Federal ID # 870575087). This agreement needs to be modified to include a signal at the 400 south and Redwood road intersection.

3) The proposed location of the elementary school may require improvements to the

adjacent roads beyond their standard cross sections to accommodate ingress, egress, and queuing. These modifications shall be based on the amended traffic study and the final site layout of the school.

4) In Figure 3 (page 13) of the Traffic Impact study prepared by Hales Engineering dated August 2013, the numbers do not match the numbers in the Trip Generation section or the Trip Distribution and Assignment section of the report. These errors appear to be due to rounding but represent, in some cases, a difference of more than 5% from the intended distribution. This report shall be updated to ensure that the study intersections do not exceed thresholds with the revised distribution.

5) The project shall comply with the recommendations of the Traffic Study Memorandum from Hales Engineering dates 4-2-2014 including providing left turn lanes for the elementary school. If the road is to be constructed before the location of the accesses are known, a left turn lane shall be provided for the entire primary frontage and extend a sufficient distance past the frontage to provide adequate queuing lenghts.

6) While the existing utility systems (culinary water, pressurized irrigation, storm drain and sewer) currently have adequate capacity for the City's current rate of growth, the adoption of the community plan does not represent a reservation of capacity in any of the systems. Capacity is available on a first come, first serve basis and final verification of system capacity will need to be determined prior to the recordation of plats. At the time of plat recordation, Developer shall be responsible for the installation and dedication to City of all onsite and offsite improvements sufficient for the development of Developers' Property in accordance with the current City regulations. While the anticipated improvements required for the entire Property are set out in the community plan, that is only the City's best estimate at this time as to the required improvements and is not intended to be an exhaustive list. The required improvements for each plat shall be determined by the City Engineer at the time of plat submittal and shall primarily be based on the exhibits in the Community plan but may be adjusted in accordance with current City regulations. The infrastructure anticipated to be needed for the build out of this project shall be provided for in the community plan and includes, but is not limited to, the following:

- Connections to CUWCD turnout vaults at Redwood Road/Pioneer Crossing and at 800 West/Pony Express Parkway.
- A staging pond, filter station, and booster pump station on the Welby Jacob Canal and a 16" waterline connecting this new source to the existing secondary water system.
- A 14" secondary waterline in 400 South from Saratoga Road to Redwood Road.
- A 6" secondary waterline in Saratoga Road from 400 south extending south to the existing secondary water system in SSD.

- A 12” secondary waterline in Redwood Road from 400 south and connecting to the existing 8” secondary waterline in Parkway Blvd.
- A 16” waterline in Redwood Road from Parkway Blvd extending to and connecting to the existing 16” secondary waterline in Grandview Blvd.
- An 8” sewer main in 400 South from approximately the existing power substation extending east to the Inlet Park lift station.
- A 24” sewer main along the south eastern boundary of the property sufficient to bypass the last segment of the existing sewer main in SSD.
- Upgrades to the existing Inlet Park lift station.
- On site storm drainage and detention sufficient to meet city standards.
- Comprehensive Tickville Wash improvements sufficient to convey the 100-yr storm event to the lake compliant with all City, County, State, and FEMA requirements.
- Frontage improvements along Redwood Road compliant with the City’s transportation master plan and its Engineering standards and specifications.
- Frontage improvements along 400 South compliant with the City’s transportation master plan and its Engineering standards and specifications.

7) A map revision will be required through FEMA before any lots can be recorded in any area currently shown within the FEMA 100-yr flood plain including Zone “A” which is identified as those areas having a 1% annual chance flood event with no defined base flood elevation.

8) The developer shall obtain an Army Corp of Engineers (ACOE) 404 permit for any portion of the project that may disturb wetlands and must comply with all local, state, and federal laws.

9) Developer shall bury and/or relocate all overhead distribution power lines that are within this project.

10) Developer shall provide a geotechnical report and hydrologic/hydraulic storm drainage calculations for the overall project. Detention areas and volumes shall be identified as well as all proposed outfall locations. The project shall comply with all City, UPDES and NPDES storm water pollution prevention requirements. Storm water release shall not exceed 0.2 cfs/acre and must be cleaned to remove 80% of Total Suspended Solids and all hydrocarbons and floatables.

11) All roads shall comply with the City’s TMP be designed and constructed to City and AASHTO standards, and shall incorporate all geotechnical recommendations as per the applicable soils report. Road cross sections shall match either the ones in the City’s adopted Engineering Standards and Specifications or the Community Plan and must also comply with international fire code requirements. Intersection spacing along 400 south and on all internal roads shall comply with the spacing standards

identified in the City's adopted TMP. The Community Plan shall include the required improvements to Redwood Road and 400 South in the Thoroughfare network plan as per the TMP and the City's engineering standards and specifications.

12) Road names and coordinates shall comply with current city ordinances and standards.

13) Project shall comply with the City's adopted Parks, Recreation, Trails, and Open Space Master Plan. Trail and open space designs shall comply with all City standards and specifications.

14) Park strips less than 9' in width shall only be planted with trees appropriate for narrow areas and that will not damage the sidewalk as they grow.

15) Open Space areas that will maintained by the City must be designed in accordance with City Standards and the City's Engineering Standards and Specifications.

16) Developer shall prepare and submit signed easements for all public facilities not located in the public right-of-way. Sewer and storm drains shall be provided with a minimum of 20' wide easements and water and irrigation lines a minimum of 10' wide easements centered on the facility. Utility lines may not be closer than 10' apart from each other or from any structure. Developer shall provide 12' paved access roads and 20' wide access easements to any location where access is required outside the ROW such as sewer or storm drain manholes.

17) All street lighting and any other lighting proposed to be dedicated to and maintained by the City shall comply with the current City standards and specifications. All lighting shall be full-cutoff style and meet all other City and IESNA standards.

18) Project shall comply with all ADA standards and requirements.

19) Utilities including water, irrigation, sewer and storm drain and shall not be located within any lot residential lot boundary (except for laterals).

20) Lots shall not contain any sensitive lands; all sensitive lands must be placed in protected open space.

21) Phasing plan within the Community Plan shall illustrate the phasing of the frontage improvements along 400 south and Redwood Road.

22) Secondary and Culinary Water Rights must be secured from or dedicated to the City with each plat proposed for recordation compliant with current City Code. Prior to acceptance of water rights proposed for dedication, the City shall evaluate the rights proposed for conveyance and may refuse to accept any right that it determines to be insufficient in annual quantity or rate of flow or has not been

approved for change to municipal purposes within the City or has not been approved for diversion from City-owned waterworks by the State Engineer.

HALES ENGINEERING
innovative transportation solutions

MEMORANDUM

Date: April 8, 2014

To: Krisel Travis, DR Horton

From: Ryan Hales, P.E., PTOE, AICP
Jeremy Searle, P.E.

S□□□□□□: **E□□□ □□□□r□ S□□□□□□T□r□ L□□□□ □□ S□□r□ □□d R□□d**

UT13-488

This memorandum analyzes the impact of moving the proposed school site on the DR Horton development to Sherwood Road. Specifically, this memorandum will look at the necessity of a two-way left-turn lane (TWLTL) on Sherwood Road.

T□ □□□ □□ L□□□□□□r□ L□□□

Previously, Sherwood Road was planned as a Collector Road, which is defined as a 3-lane cross section (two travel lanes and a center TWLTL). However, as detailed in a previous memorandum by Hales Engineering, dated August 30, 2013, the projected traffic on the roadway is approximately 2,000 vehicles per day. The memo concluded that downgrading Sherwood road from collector to local street status will not have a detrimental effect on the surrounding roadway network.

The City of Saratoga Springs Transportation Master Plan, adopted September 2012, identifies the capacity of a 2-lane street at level of service (LOS) C as 9,700 vehicles per day. The projected traffic on Sherwood Road is well below this threshold. In the previous According to ITE *Trip Generation (9th Edition, 2012),* the addition of the elementary school will add approximately 1,000 daily trips to the roadway, increasing the average daily traffic to approximately 3,000 vehicles per day. According to the City of Saratoga Springs Transportation Master Plan, this is still well below the capacity of a 2-lane roadway.

P□□□ H□□r Tr□□□□

Although the number of daily trips is well below the capacity of a 2-lane roadway, it is recommended that turn lanes be provided for an elementary school at this location. Schools generate a significant amount of traffic in a very short time period (when school starts and ends) which can create delays during those periods of the day. Therefore, a left-turn pocket at the school access is recommended to reduce delay during the busy periods of the day. A full TWLTL along the length of the roadway is not necessary.

O□□S□□□ C□r□□□□□□□□□

When the elementary school site is designed, it is recommended that sufficient on-site storage be provided to accommodate drop-off / pick-up vehicles. Assuming the on-site storage is sufficient, queuing should not significantly affect traffic on the roadway. Site design should also consider the proposed school boundaries and locate accesses so as to encourage right-turns into and out of the site.

C□□□□□□□□□□ □□d R□□□□ □ □□d□□□□□

The following is a summary of conclusions and recommendations:

- A TWLTL is not necessary along Sherwood Road.
- Left-turn pockets are recommended at the proposed elementary school accesses.
- The elementary school site design should include adequate storage for drop-off / pick-up vehicles and should encourage right-turns into and out of the site.

If you have any questions regarding this memo, please feel free to contact us.

APPENDI□

Site Plan

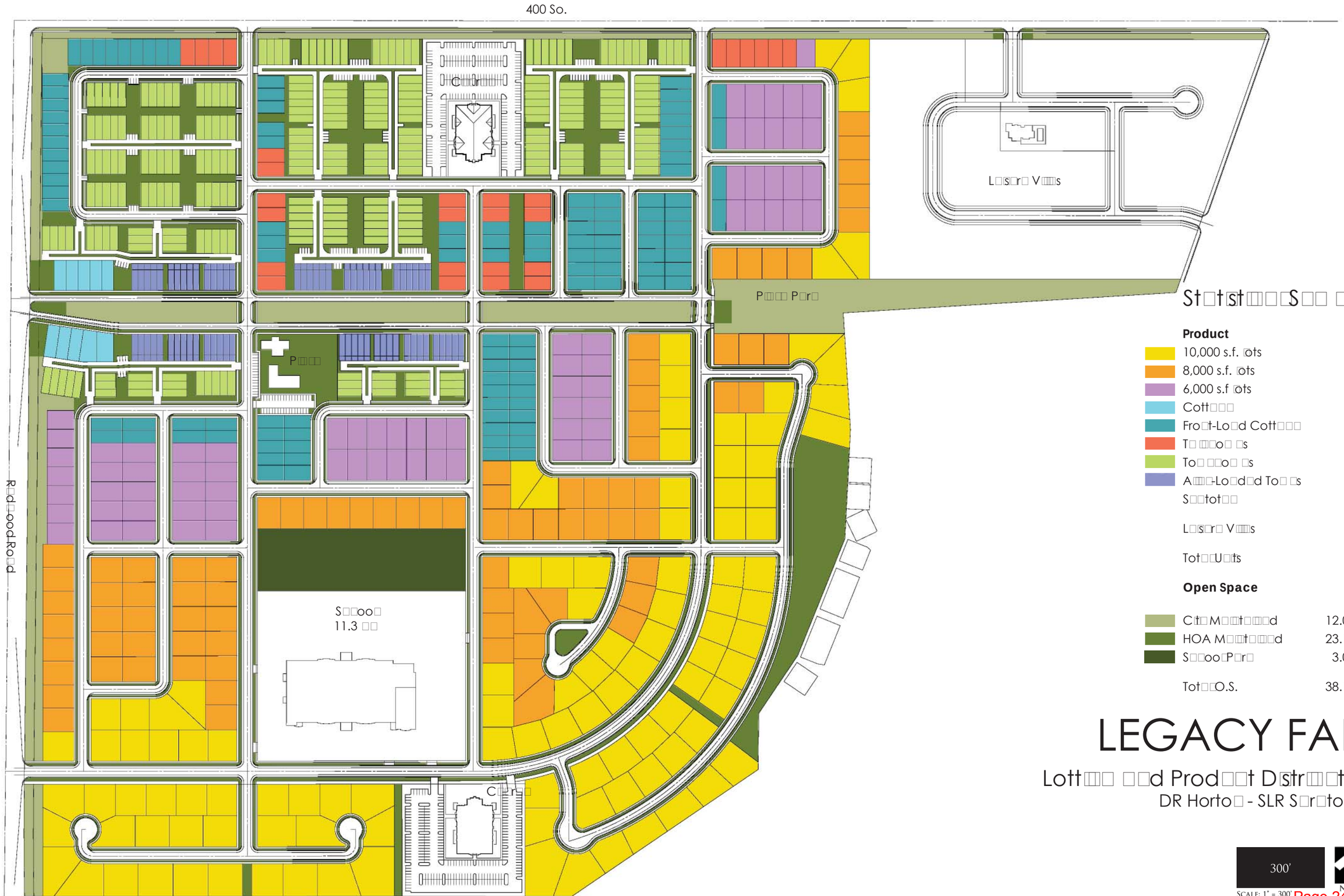

St□t□st□□□S□□ □ □r□

Product	Units
10,000 s.f. □ots	110
8,000 s.f. □ots	83
6,000 s.f □ots	74
Cott□□□	10
Fro□t-Lo□d Cott□□□	115
T□ □□o□ □s	28
To□ □□o□ □s	254
A□□□-Lo□d□d To□ □s	66
S□□tot□□	740
L□s□r□ V□□s	116
Tot□□U□ts	856

Open Space

C□t□ M□□t□□□d	12.0 □□r□s
HOA M□□t□□□d	23.1 □□r□s
S□□oo□P□r□	3.0 □□r□s
Tot□□O.S.	38.1 □□r□s (20.9%)

LEGACY FARMS

Lott□□ □□d Prod□□t D□str□□t□□ P□□

DR Horto□ - SLR S□r□to□□ S□r□□s

A□r□7, 2014

300'

SCALE: 1" = 300'

NORTH DESIGN

EXHIBIT 7: COMMUNITY PLAN

EXHIBIT 8: CIVIC PLAN

Exhibit E - February 2014

LEGACY FARMS

Co□ □ □□t□ P□□

B□o□□T□□□	A□r□s	% (181.9 □□.)	ERU□s
BT-1	25.8	14.2	
BT-2	39.3	21.6	
BT-3	46.9	25.8	**1,000 (Residential)** **55 (Non-Residential)**
BT-4	22.8	12.5	**Total Maximum = 1,055 ERUs**
C□□□ S□□□□	17.0	9.3	
Co□ □ □□t□ O□□□ S□□□□	16.9		

EXHIBIT 7: COMMUNITY PLAN

EXHIBIT 8: CIVIC PLAN

Exhibit F -
May 28, 2014

LEGACY FARMS

Co□ □ □□t□ P□□

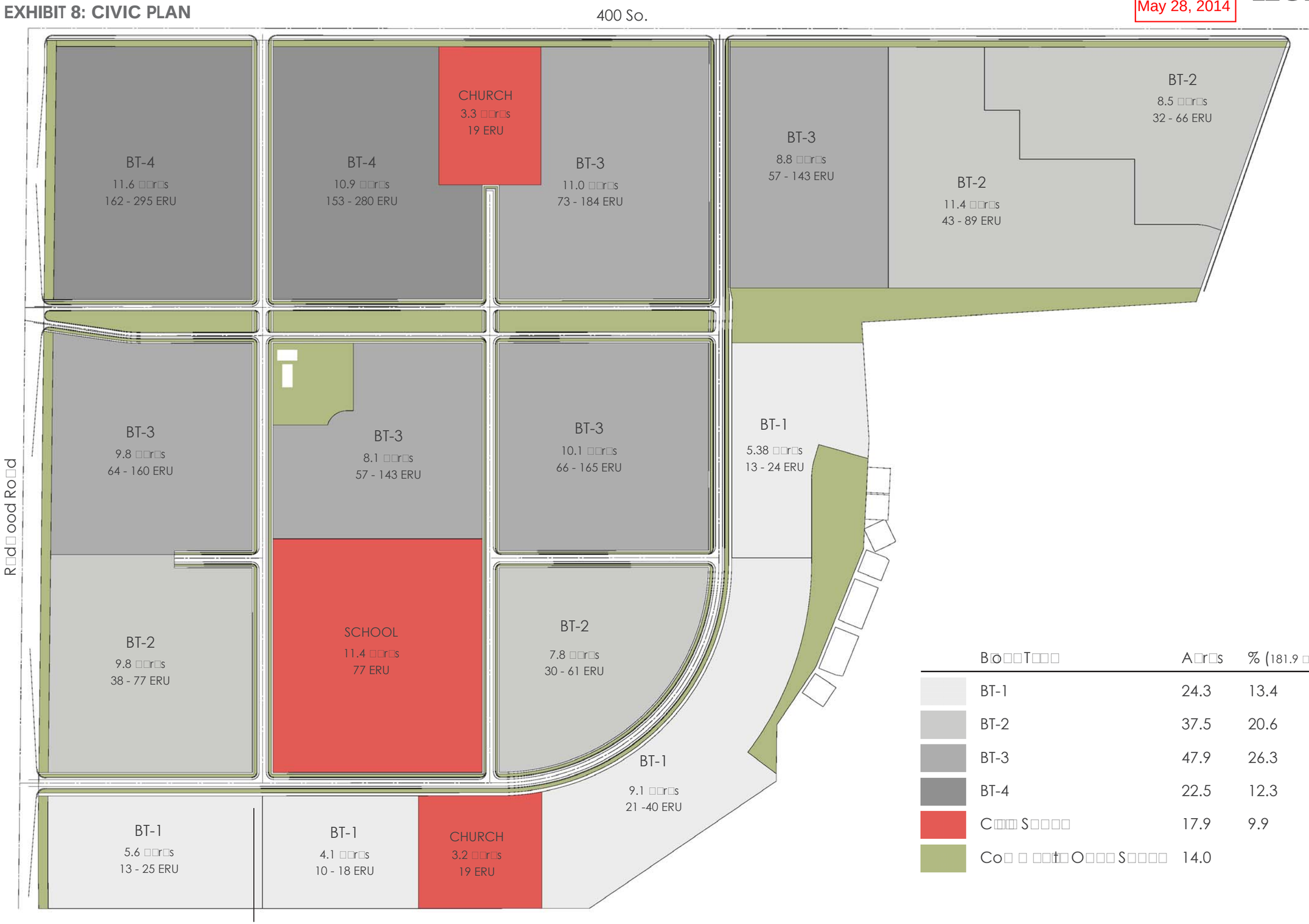

NORTH

0□ 300□

B□o□□T□□□	A□r□s	% (181.9 □□.)	ERU□s
BT-1	24.3	13.4	
BT-2	37.5	20.6	
BT-3	47.9	26.3	**1,000 (Residential)** **55 (Non-Residential)**
BT-4	22.5	12.3	**Total Maximum =** **1,055 ERUs**
C□□□ S□□□□	17.9	9.9	
Co□ □ □□t□ O□□□ S□□□□	14.0		

Exhibit G
Village Plan 1
February 2014

LEGACY FARMS

V□□□□□ P□□□ 1

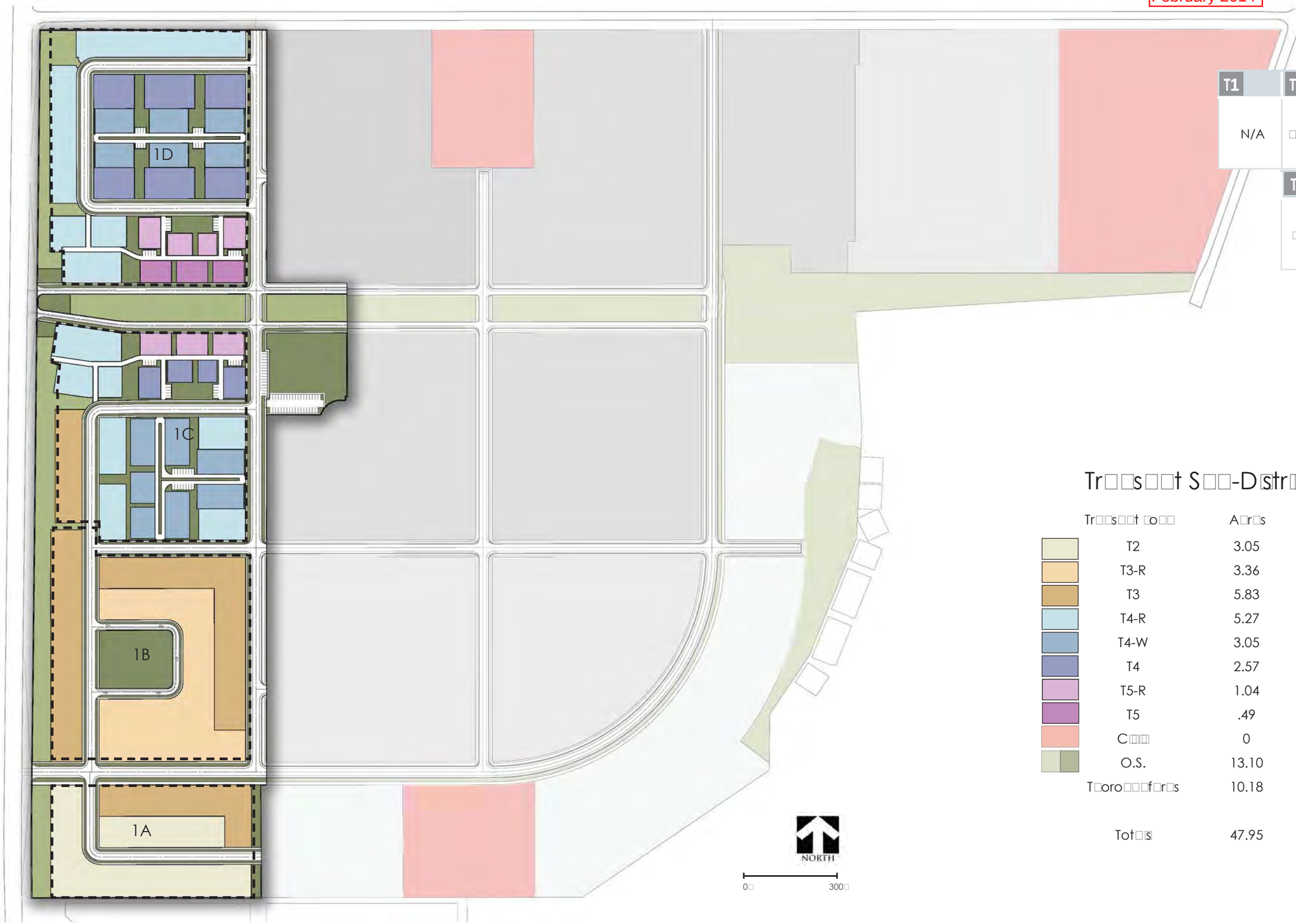

T1	T2	T3	T4	T5
N/A	4 ERU □□r □ross □□r□	10 ERU □□r □ross □□r□	24 ERU □□r □ross □□r□	34 ERU □□r □ross □□r□

T3R	T4R	T5R
8 ERU □□r □ross □□r□	12 ERU □□r □ross □□r□	28 ERU □□r □ross □□r□

T4W
24 ERU □□r □ross □□r□

Tr□□s□□t S□□-D□str□t Ass□□□□ □□ts

	Tr□□s□□t □o□□	A□r□s	% of Gross Ar□□	M□x. ERU
	T2	3.05	6%	12
	T3-R	3.36	7%	27
	T3	5.83	12%	58
	T4-R	5.27	11%	63
	T4-W	3.05	6%	73
	T4	2.57	5%	62
	T5-R	1.04	2%	29
	T5	.49	1%	17
	C□□□	0	0%	
	O.S.	13.10	26%	
	T□oro□□□f□r□s	10.18	21%	
	Tot□s	47.95	100%	341

Exhibit H
Village Plan 1
May 2014

LEGACY FARMS

V□□□□ P□□ 1

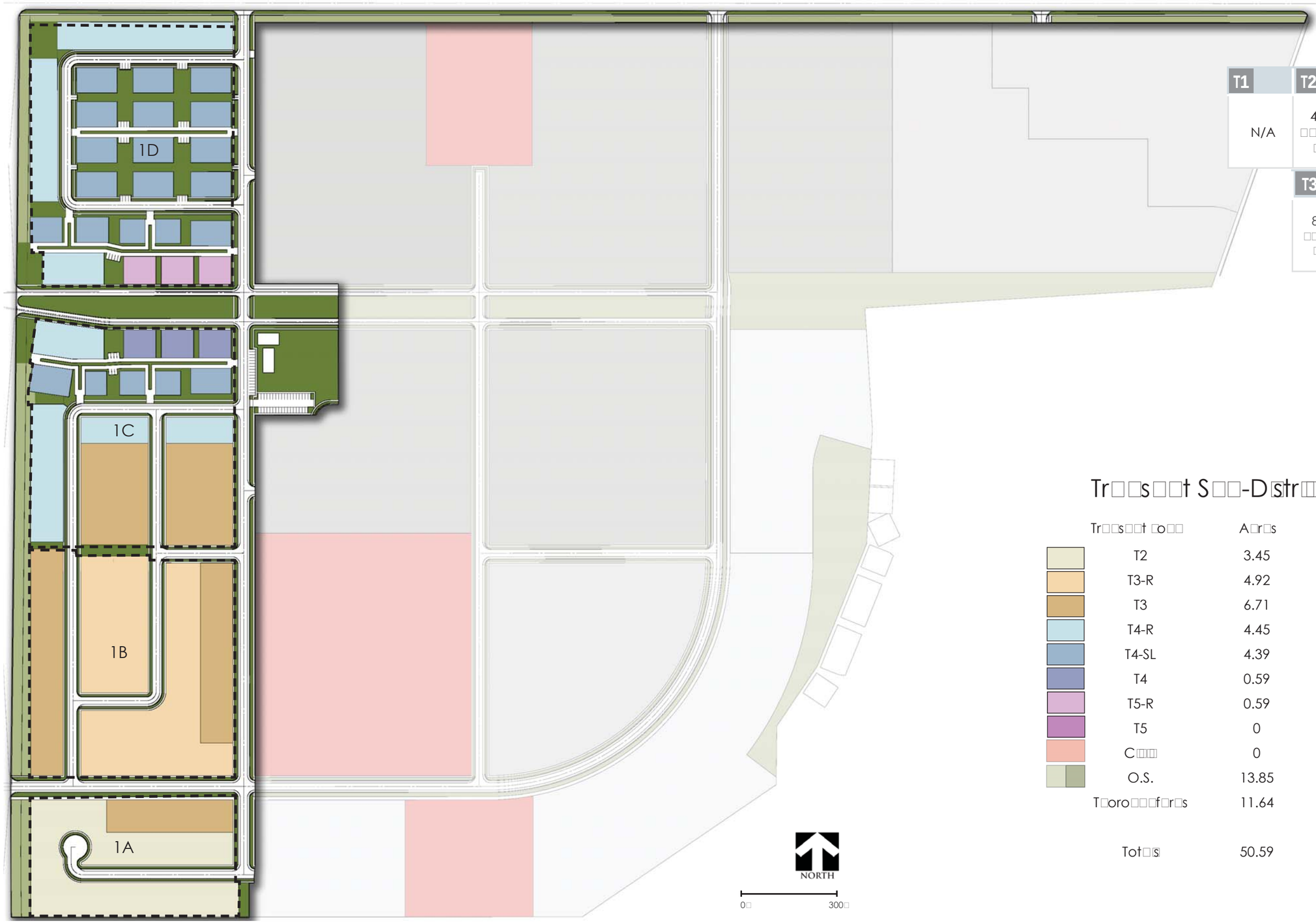

T1	T2	T3	T4	T5
N/A	4 ERU □□r □ross □□r□	10 ERU □□r □ross □□r□	24 ERU □□r □ross □□r□	34 ERU □□r □ross □□r□

T3R	T4R	T5R
8 ERU □□r □ross □□r□	12 ERU □□r □ross □□r□	28 ERU □□r □ross □□r□

T4W
24 ERU □□r □ross □□r□

Tr□□s□□t S□□-D□str□t Ass□□□□ □□ts

Tr□□s□□t □o□□	A□r□s	% of Gross Ar□□	M□x. ERU
T2	3.45	7%	14
T3-R	4.92	10%	39
T3	6.71	13%	67
T4-R	4.45	9%	53
T4-SL	4.39	9%	105
T4	0.59	1%	14
T5-R	0.59	1%	17
T5	0	0%	
C□□□	0	0%	
O.S.	13.85	27%	
T□oro□□□f□r□s	11.64	23%	
Tot□□s	50.59	100%	309

CITY OF SARATOGA SPRINGS

City Council
Staff Report

Beacon Point
Rezone and Concept Plan
June 17, 2014
Public Hearing

Report Date:	June 10, 2014
Applicant/Owner:	Paul Watson / Mendenhall
Location:	Approximately 4300 South Redwood Road
Major Street Access:	Redwood Road
Parcel Number(s) & Size:	16-003-0032; 63.64 acres
Parcel Zoning:	R-2, Low Density Residential
Adjacent Zoning:	PC (south); R-3 (north)
Current Use of Parcel:	Vacant
Adjacent Uses:	Undeveloped Teguayo (south); Lake Mountain Single Family Residential (north)
General Plan Designation:	Low Density Residential (1-4 units per acre)
Previous Meetings:	Concept Plan Review: PC 1-24-13 and CC 2-5-13; Preliminary Plat approval 07-16-13; Concept Plan Review (R-5 Rezone): PC 1-23-14 and CC 02-18-14 (denied); Concept Plan Review (R-4 Rezone): PC 5-22-14
Previous Approvals:	Preliminary Plat Phase 1(50 lots)
Land Use Authority:	City Council
Future Routing:	Public Hearing with City Council
Author:	Scott Langford, Senior Planner

A. Executive Summary:

This is a request to rezone 63.64 acres from R-2 to R-4 and to review a conceptual 154 lot residential subdivision at a density of 2.42 units per acre. The applicant is proposing a minimum lot size of 9,000 square feet. The proposed Concept Plan shows 13.98 acres of open space, which is 22% of the property; however, 3% of the open space has slopes greater than 30%.

Recommendation:
Staff recommends that the City Council conduct a public hearing, take public comment, discuss the proposed rezone and concept plan, and choose from the options in Section "I" of this report. Options include a motion for approval as proposed, a motion for approval as contingent upon approval of Preliminary Plat, a motion for approval contingent upon a development agreement, a motion for a denial based on non-compliance with findings of specific criterion, or a motion to continue the item to gather additional supportive information.

Scott Langford, AICP, Senior Planner
1307 North Commerce Drive, Suite 200 • Saratoga Springs, Utah 84045
slangford@saratogaspringscity.com • 801-766-9793 x116 • 801-766-9794 fax

B. Background:

A Concept Plan for the Beacon Point Development was reviewed by the Planning Commission (1-24-13) and City Council (2-5-13) in 2013, under the name of "Sugar Plumb". The City Council approved a Preliminary Plat for 32.71 acres of the site on July 16, 2013, which included 50 lots. Since receiving approval, the applicant has discovered that, due to the high cost of infrastructure needed to serve this development, they are not able to move forward with the approved Preliminary Plat. Therefore the applicant submitted a request to rezone the property from the R-2 to the R-5 zone, which was denied by the City Council on February 18, 2014.

C. Specific Request:

The applicant is now seeking to rezone the 63.64 acre property from R-2 (single family residential; minimum 14,000 square foot lots) to R-4 (single family residential; minimum 9,000 square foot lots).

The proposed Concept Plan associated with the rezone request has 154 single family lots, all of which are 9,000 square feet and larger, and an overall density of 2.42 units per acre. The previous Concept Plan under the R-5 zone had 163 single family lots.

D. Process:

Per section 19.17.03 of the City Code, all rezoning applications shall be reviewed by the City Council after receiving a formal recommendation by the Planning Commission. An application for a rezone request shall follow the approved City format. Rezones are subject to the provisions of Chapter 19.13, Development Review Processes.

The Planning Commission reviewed the proposed rezone to the R-4 zone on May 22, 2014. After discussion regarding road connectivity and phasing, the Planning Commission voted 3 to 3, which is a vote of no recommendation regarding this rezone application (draft minutes attached).

E. Community Review:

Per 19.13.04 of the City Code, this item has been noticed in *The Daily Herald*, and each residential property within 300 feet of the subject property was sent a letter at least ten calendar days prior to this meeting. As of the completion of this report, the City has not received any public comment regarding this application apart from the comments taken during the Planning Commission hearing on May 22nd. The draft minutes from that meeting record those comments.

F. General Plan:

The site is designated as Low Density Residential on the adopted Future Land Use Map. The General Plan states that areas designated as Low Density Residential are *"designed to provide areas for residential subdivisions with an overall density of 1 to 4 units per acre. This area is to be characterized by neighborhoods with streets designed to the City's urban standards, single-family detached dwellings and open spaces."* The proposed Concept Plan associated with the proposed rezone shows an overall density of 2.42 units per acre, and as such demonstrates that the property can be developed in a way that is in compliance with the General Plan.

G. Code Criteria:

The City Council is given wide latitude to make legislative land use decisions. A rezone is a legislative land use decision and great deference is given to the Council when exercising its legislative discretion to grant or deny a rezone as long as the Council can find that their decision promotes the general welfare of the city.

That said, the following criteria are pertinent code requirements that the Planning Commission and City Council shall consider, but not be held to, when reviewing a rezone request (Sections 19.17.03 & .04).

The proposed change will conform to the Land Use Element and other provisions of the General Plan: The property is designated as Low Density Residential on the Future Land Use map. This designation supports residential density of 1 to 4 dwelling units per acre. Zoning districts that facilitate this type of density include the R-1, R-2, R-3, R-4, and R-5 zones. The proposed R-4 supports residential development in a density range that is consistent with the General Plan Future Land Use map.

The proposed change will not decrease nor otherwise adversely affect the health, safety, convenience, morals, or general welfare of the public: Section 19.17.02 states that rezone applications shall be accompanied by an application for Concept Plan review. The purpose of the Concept Plan is to provide general assurance that the proposed rezoning of the property can be developed in a way that is consistent with the zoning district being petitioned.

The applicant has submitted a Concept Plan that shows a 154 lot single family residential subdivision on 63.64 acres (2.4 dwelling units per acre). The proposed subdivision will connect with two existing stubbed streets in the Lake Mountain Estates subdivision and two new intersections onto Redwood Road.

The City's Master Transportation Plan shows a collector road running east/west within the northern portion of the Concept Plan. During previous meetings, staff, the Planning Commission, and City Council have raised safety concerns regarding the number of private driveways located on the future collector roadway. In order to reduce the potential number of driveways backing directly onto the collector road, staff has recommended that the Concept Plan employ a type of shared driveway/private road design.

Example of Shared Driveway Design:

The shared driveways would be privately owned and maintained with access provided by an easement (shown on Concept Plan). Staff recommends that if such a design is used that a private HOA be responsible for maintaining the landscaping within the islands and the pavement within the private driveways. Staff also recommends that the homes located off of these shared drives have an individual private driveway length of 20 feet measured from the curb of the shared driveway to the garage.

The proposed Concept Plan has a significant number of lots that are required to provide proper setbacks in accordance with the Wildland-Urban Interface Code. Based on the fuel type located in this area, the preliminary assessment is that the lots that back the unimproved and non-regularly maintained open space must have a minimum 30 foot setback.

At preliminary plat approval, a Fire Protection Report, or Fire Protection Plan in accordance with the Wildland-Urban Interface Code, shall be prepared to assess fire probability and potential hazards by a person or agency qualified by training and experience and approved by the City Fire Chief.

If the rezone request is approved, the applicant will submit a formal Preliminary Plat. City staff will review the plat in greater detail to ensure that the future plat will have sufficient connection to public utilities and services (including but not limited to emergency services). Until that time, staff believes that the general subdivision layout and proposed phasing plan is serviceable.

The proposed change will more fully carry out the general purposes and intent of this Title and any other ordinances of the City: The proposed rezone from R-2 to R-4 facilitates low density residential development. The General Plan has designated this area for the development of low density residential development. That said, this is the only piece of property in the city that is currently zoned R-2. The General Plan encourages a mixture of housing types and densities to serve a diverse demographic.

In balancing the interest of the petitioner with the interest of the public, community interests will be better served by making the proposed change: Rezoning the property to the R-4 zone will allow the property to be developed as a low density residential subdivision and provide a transition between lower density development to the north and the proposed higher density residential development to the south.

Concept Plan:
The following criteria are pertinent requirements that the Planning Commission and City Council shall consider when reviewing a Concept Plan located in an R-4 zoning district (Section 19.04.14).

Permitted or Conditional Uses: complies. Section 19.04.14(2 & 3) lists all of the permitted and conditional uses allowed in the R-4 zone. The Concept Plan appears to provide residential building lots that will support single family homes, which are permitted uses in the R-4 zone. Specific details regarding lot size and public infrastructure will be reviewed in detail once a Preliminary Plat has been submitted.

Minimum Lot Sizes: can comply. 19.04.14(4) states that the minimum lot size for lots is 9,000 square feet. The smallest lot shown on the Concept Plan is 9,000 square feet; however, the code also states that corner lots shall be a minimum ten percent larger than interior lots. Therefore all of the corner lots must be a minimum 9,900 square feet in the R-4 zone. There are at least 10 corner lots that do not meet this minimum size requirement. The applicant stated at the Planning Commission hearing that they will make the necessary adjustments and bring in a Preliminary Plat that provides corner lots with a minimum square footage of 9,900 square feet.

Setbacks and Yard Requirements: complies. Section 19.04.22(5) outlines the setbacks required by the R-4 zone. These requirements are:

Front: Not less than twenty-five feet.

Sides: 8/16 feet (minimum/combined)
Rear: Twenty feet

Corner: Front 25 feet; Side abutting street 20 feet

More detailed review of these requirements will be conducted at the time of Preliminary Plat application especially as they pertain to the Wildland-Urban Interface Code requirements.

Parking, vehicle and pedestrian circulation: complies. Section 19.09.11 requires single-family homes to have a minimum 2 parking stalls within an enclosed garage. Driveways leading to the required garages must be a minimum 20 feet in length. Even though this requirement will be reviewed by the building department with each individual building permit application, staff believes that the proposed lots are of sufficient size to support this requirement.

Vehicular circulation from the development to Redwood Road is a concern and will be addressed with appropriate conditions at the time of Preliminary Plat. The Concept Plan currently shows Phase 1 as having two points of connection with Lake Mountain Estates. Connection from the development to Redwood Road is not shown until Phase 2, where two connections to Redwood Road are presented.

H. Recommendation and Alternatives:

Staff recommends that the City Council review the Concept Plan and provide the applicant with direction in preparation for a Preliminary Plat application.

After evaluating the required standards for rezoning property, staff also recommends that the City Council conduct a public hearing and choose one of the following motions:

Approval Motion (No Conditions):
"Based upon the evidence and explanations received today, I move that the City Council approve the rezoning of approximately 63.64 acres of property as shown in Exhibit 2 and generally located at 4300 South Redwood Road from the R-2 to the R-4 zone, with the findings below:

Findings:
1. Per Section "G" in the staff report, the City Council is given wide latitude and great deference in making rezone decisions, which are legislative decisions. A court will presume the Council's decision is valid unless it is found to be arbitrary, capricious, or otherwise illegal.
2. The proposed rezone has met, or can conditionally meet all Code requirements as provided in Section "G" of the staff report, which Section is incorporated into these findings by this reference.

Conditional Approval Motion:
"Based upon the evidence and explanations received today, I move that the City Council approve the rezoning of approximately 63.64 acres of property as shown in Exhibit 2 and generally located at 4300 South Redwood Road from the R-2 to the R-4 zone, with the findings and conditions below:

Findings:
1. Per Section "G" above, the City Council is given wide latitude and great deference in making rezone decisions, which are legislative decisions. A court will presume the Council's decision is valid unless it is found to be arbitrary, capricious, or otherwise illegal.
2. The proposed rezone has met, or can conditionally meet all Code requirements as provided in Section "G" of this report, which Section is incorporated into these findings by this reference.

Conditions:
1. That the rezone decision shall take effect after the applicant obtains Preliminary Plat approval. The Preliminary Plat shall be substantially consistent with the attached Concept Plan.
2. All requirements of the City Engineer shall be met, including but not limited to those in the attached report.

3. All requirements of the Fire Chief shall be met, including but not limited to those in the attached report.
4. Any other conditions as articulated by the City Council:

_____

_____

Positive Recommendation with Development Agreement Motion:
"Based upon the evidence and explanations received today, I move that the City Council approve the rezoning of approximately 63.64 acres of property as shown in Exhibit 2 and generally located at 4300 South Redwood Road from the R-2 to the R-4 zone, with the findings and conditions below:

Findings:

1. Per Section "G" above, the City Council is given wide latitude and great deference in making rezone decisions, which are legislative decisions. A court will presume the Council's decision is valid unless it is found to be arbitrary, capricious, or otherwise illegal.
2. The proposed rezone has met, or can conditionally meet all Code requirements as provided in Section "G" of the report, which Section is incorporated into these findings by this reference.

Conditions:

1. That, prior to the rezone decision taking effect, the applicant shall enter into a development agreement with the City that substantially complies with the proposed development agreement attached as an exhibit to this report.
2. The effective date of the rezone decision shall be the date the development agreement is recorded with the Utah County Recorder's office.
3. Applicant shall ensure that the development agreement is recorded. City will coordinate with Applicant to get it recorder but it is the Applicant's responsibility to ensure the development agreement is recorded.
4. All requirements of the City Engineer shall be met, including but not limited to those in the attached report.
5. All requirements of the Fire Chief shall be met, including but not limited to those in the attached report.
6. Any other conditions as articulated by the City Council:

_____

_____

Continuation Motion:
"I move to **continue** the item to another meeting, with direction to the applicant and Staff on information and/or changes needed to render a decision, as follows:

_____

_____

_____

Denial Motion:
"Based upon the evidence and explanations received today and the following findings, I move that the City Council deny the request to rezone approximately 63.64 acres of property as shown in Exhibit 2 and generally located at 4300 South Redwood Road from the R-2 to R-4 zone. Specifically I find that the following standards and/or code requirements have not been met:"

List Specific Code Standards and Requirements:

_____

_____

_____

I. Exhibits:

1. Engineering Report
2. Zoning / Location map
3. Aerial Photo
4. Concept Plan
5. Previously Approved Preliminary Plat (July 2013)
6. May 22, 2014 Planning Commission Minutes

City Council
Staff Report

Author: Jeremy D. Lapin, City Engineer
Subject: Beacon Point
Date: May 22, 2014
Type of Item: Rezone and Concept Plan Review

CITY OF
SARATOGA SPRINGS

Description:

A. Topic: The applicant has submitted a concept plan application. Staff has reviewed the submittal and provides the following recommendations.

B. Background:

Applicant:	*Paul Watson / Mendenhall*
Request:	*Rezone and Concept Plan*
Location:	*Approximately 4300 South Redwood Road*
Acreage:	*63.64 acres - 154 lots*

C. Recommendation: Staff recommends the applicant address and incorporate the following items for consideration into the development of their project and construction drawings.

D. Proposed Items for Consideration:

1) Prepare construction drawings as outlined in the City's standards and specifications and receive approval from the City Engineer on those drawings prior to receiving Final approval from the City Council.

2) Consider and accommodate existing utilities, drainage systems, detention systems, and water storage systems into the project design. Access to existing facilities shall be maintained throughout the project.

3) Developer shall comply with the Land Development Codes regarding not disturbing 30%+ slopes. Existing drainages shall be preserved, improved with native landscaping and trails, and piped with culverts capable of passing the 100-yr flow where they cross roadways. A culvert will be necessary to pass flows under Redwood Road and improvements or easements may be necessary from Redwood Road to the Lake.

4) Incorporate a grading and drainage design that protects homes from upland flows.

5) Developer shall provide a traffic study to determine the necessary improvements to existing and proposed roads to provide an acceptable level of service for the proposed project.

6) Project must meet the City Ordinance for Storm Water release (0.2 cfs/acre for all developed property) and all UPDES and NPDES project construction requirements.

7) Developer shall meet all applicable city ordinances and engineering conditions and requirements in the preparation of the Construction Drawings.

8) Project bonding must be completed as approved by the City Engineer prior to recordation of plats.

9) All review comments and redlines provided by the City Engineer are to be complied with and implemented into the construction drawings.

10) All work is to conform to the City of Saratoga Springs Standard Technical Specifications, most recent edition.

11) Developer shall prepare and record easements to the City for all public utilities not located in a public right-of-way.

12) Developer is required to ensure that there are no adverse effects to adjacent property owners and future homeowners due to the grading and construction practices employed during completion of this project.

13) Developer shall incorporate a 77' ROW collector road into the project based on the City's adopted Transportation Master Plan that runs East-West from Redwood Road to the western boundary of the property.

14) Driveways are discouraged along collector roads. Project design should eliminate or minimize driveways along the collector road and the plat should stipulate that corner lots may not have access onto the collector road.

15) This project will be located at the end of the City's zone 2 culinary and secondary distribution system and as such may not be able to provide adequate pressures for all areas. The developer shall perform flow tests and develop both a culinary and a secondary water model to verify all proposed areas meet City culinary standards of 40 psi residual during a 2,000 gpm fire flow and secondary standards of 30 psi minimum during peak flow. Areas that cannot meet those standards will not be able to construct until additional infrastructure is available to bring those areas up to minimum standards.

16) Frontages along Redwood Road will need to be improved to City standards including road widening, an 8' meandering trail, and dedication of a 90' half width

ROW.

17) Provide a Detention/Debris Basin at the western limit of the project to protect future homes from the risks of floods and debris flows

18) Mitigate the risk of wildfires at the western boundary of this property by providing complying with the City's Wildland-Urban Interface code requirements.

19) Project shall comply with the City's Hillside Development Ordinance.

20) Any overhead utilities within this project or along frontages shall be buried.

21) The existing secondary water system cannot support this project. An additional source is required in the area to alleviate the extreme pressure swings that the current system would experience if this project is added. Although the culinary system could support both the indoor and outdoor demand for this project, this would use up significant amounts of the remaining capacity in the system and is not recommended.

22) It is recommended that the developer provide one access to Redwood Road with the first phase of construction.

Zoning and Location Map

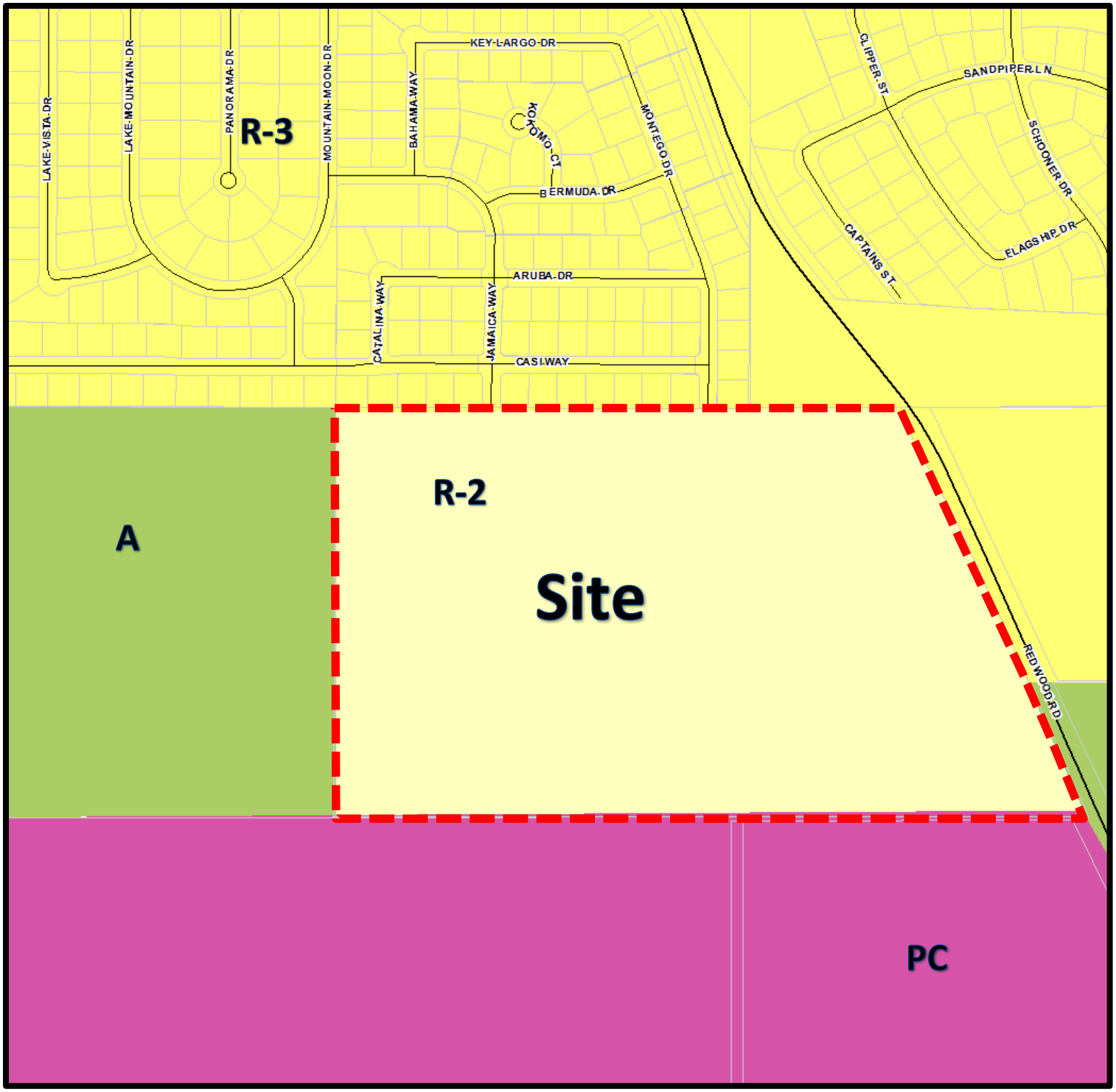

Aerial Photo

CONCEPT PLAN 4-15-14

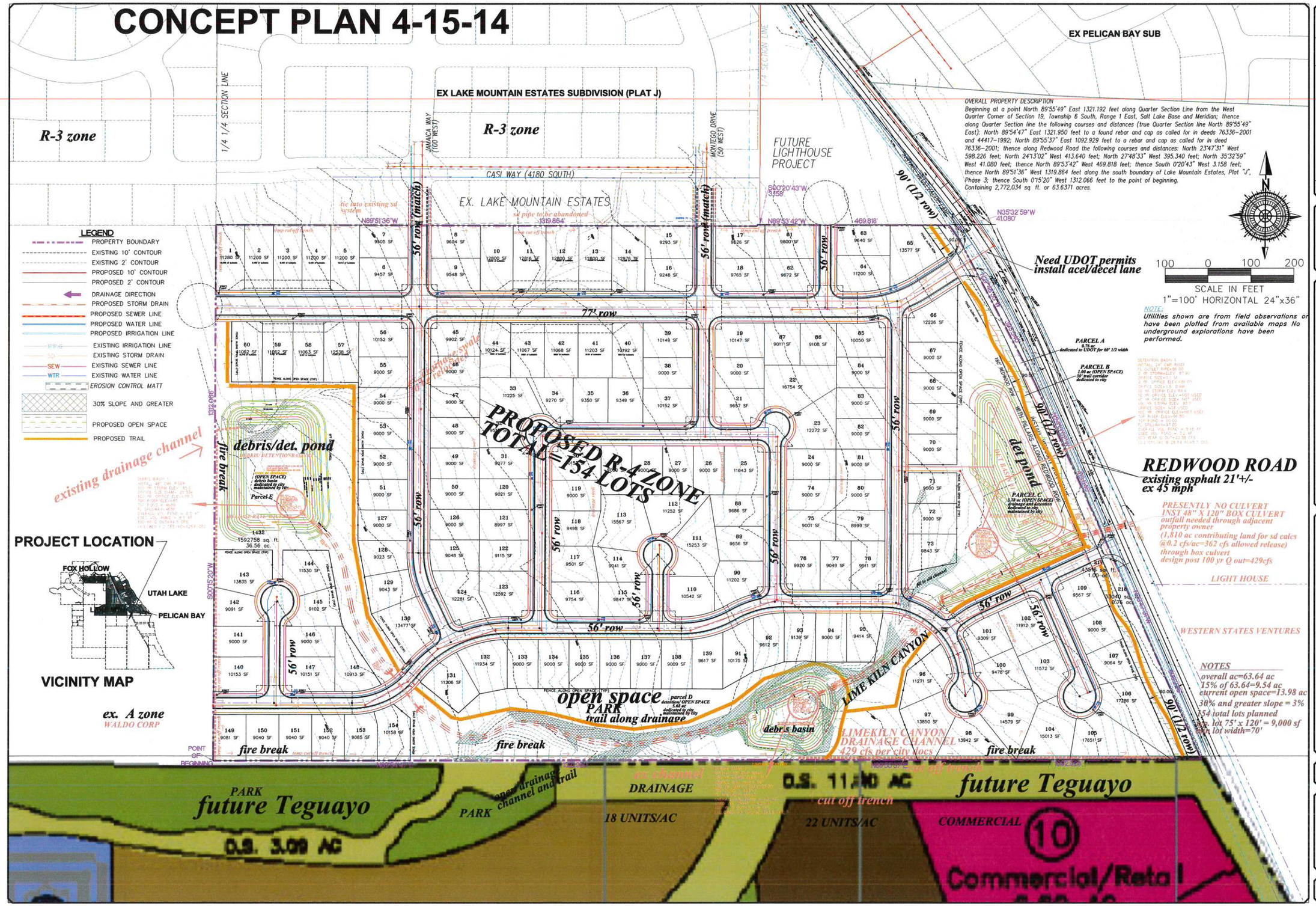

NO.	DESCRIPTION	DATE	APP'D

ORIG. DATE: 12-14-11
SURVEY BY:
DRAWN BY: GPW
DESIGNED BY: GPW
CHECKED BY: GPW
SCALE: 1"=100'

GATEWAY CONSULTING, inc.
P.O. BOX 951005 SOUTH JORDAN, UT 84095
PH: (801) 694-3848 FAX: (801) 432-7050
paul@gatewayconsultingllc.com
CIVIL ENGINEERING - CONSULTING - LAND PLANNING
CONSTRUCTION MANAGEMENT

BEACON POINT CONCEPT
OVERALL SITE PLAN
Saratoga Springs, Utah

DRAWING FILE: DBASE-Super Plumb (Mendenhall)
PROJECT NUMBER:
PLOT DATE: 4-15-14

SARATOGA CITY

SHEET NO. 1/2

RECEIVED APR 17 2014

CONCEPT PLAN 4-15-14

GATEWAY CONSULTING, inc.
P.O. BOX 951005 SOUTH JORDAN, UT 84095
PH: (801) 694-5848 FAX: (801) 432-7050
paul@gatewayconsultingllc.com
CIVIL ENGINEERING • CONSULTING • LAND PLANNING CONSTRUCTION MANAGEMENT

NO.	DESCRIPTION	DATE	APP'D

ORIG. DATE: 12-14-11
SURVEY BY:
DRAWN BY: GPW
DESIGNED BY: GPW
CHECKED BY: GPW
SCALE: 1"=80'

BEACON POINT CONCEPT
PHASING PLAN
Saratoga Springs, Utah

PLOT DATE: 4-15-14
PROJECT NUMBER
DRAWING FILE: DBASE-Sugar Plumb (Mendenhall)

SARATOGA CITY

SHEET NO. 2/2

PRELIMINARY PLAN 5-16-13

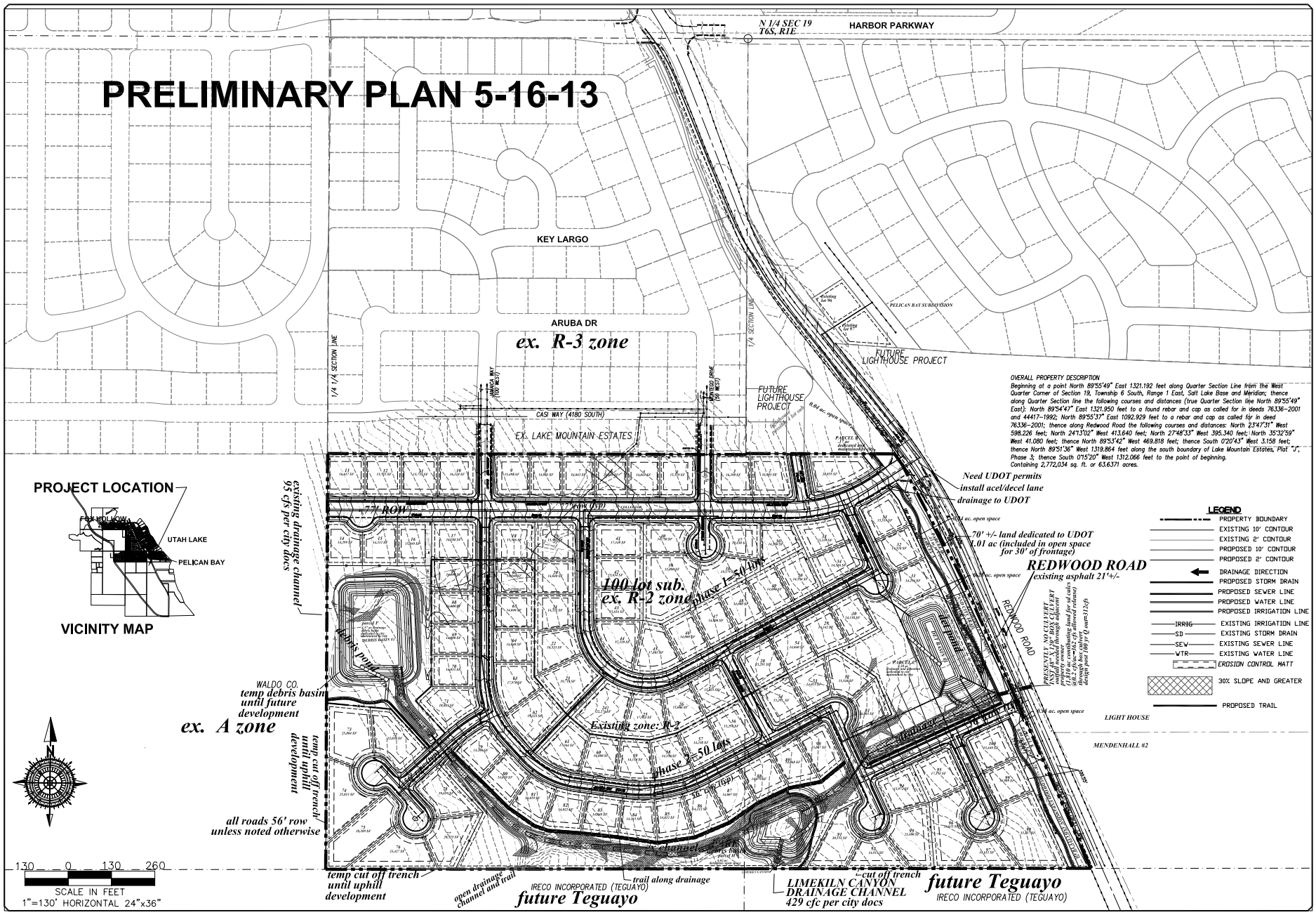

NO.	DESCRIPTION	DATE	APP'D

DRG. DATE: 12-14-99
SURVEY BY: ↑
DRAWN BY: GRV
DESIGNED BY: ↑
CHECKED BY: GCK
SCALE: 1"=100'

GATEWAY CONSULTING, inc.
P.O. BOX 95005 SOUTH JORDAN, UT 84095
PH: (801) 694-3848 FAX: (801) 432-7030
paul@gatewayconsultingslc.com
CIVIL ENGINEERING · CONSULTING · LAND PLANNING
CONSTRUCTION MANAGEMENT

BEACON POINT
(Mendenhall property)
Saratoga Springs, Utah
OVERALL SITE PLAN

5-16-13 | PLOT DATE
PROJECT NUMBER
BMAS-Sugar Plums (Mendenhall)
DRAWING FILE

SARATOGA CITY

SHEET NO. 4

BEACON POINT PHASE 1

LOCATED IN
NORTH HALF OF SECTION 19 TOWNSHIP 6 SOUTH, RANGE 1 EAST,
SALT LAKE BASE AND MERIDIAN

PRELIMINARY PLAT

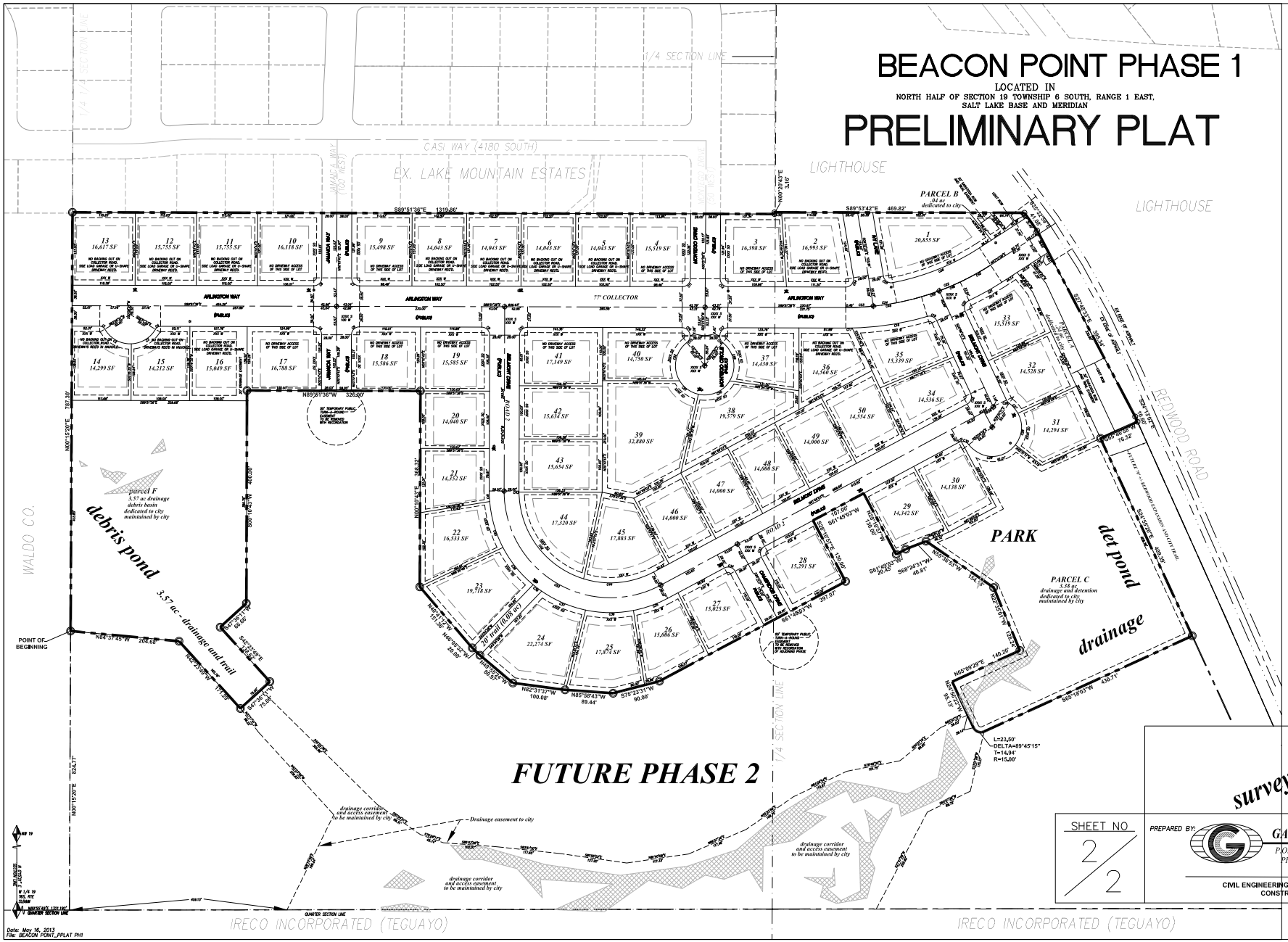

80 0 80 160
SCALE IN FEET
1"=80' (24"x36" SIZE ONLY)

LEGEND

- PHASE BOUNDARY LINE
- SECTION LINE
- CENTER LINE
- P.U.E. LINE
- SETBACK LINE
- REBAR AND CAP TO BE SET
- NEW FIRE HYDRANT
- NEW STREETLIGHT
- EXISTING FIRE HYDRANT
- EXISTING STREETLIGHT
- 30% and GREATER SLOPES
- C156 CURVE (SEE CURVE TABLE)
- L6 LINE (SEE LINE TABLE)
- 3165 S 490 W MONUMENT

SEE SHEET 1 FOR CURVE AND LINE TABLES

surveyor logo here

SHEET NO 2/2

PREPARED BY:
GATEWAY CONSULTING, inc.
P.O. BOX 951005 SOUTH JORDAN, UT 84095
PH: (801) 694-5848 FAX: (801) 432-7050
paul@gatewayconsultingllc.com
CIVIL ENGINEERING • CONSULTING • LAND PLANNING
CONSTRUCTION MANAGEMENT

Date: May 16, 2013
File: BEACON POINT_PPLAT PH1

CITY OF SARATOGA SPRINGS
CITY COUNCIL MEETING

Tuesday, February 18, 2014

Meeting held at the City of Saratoga Springs City Offices

1307 North Commerce Drive, Suite 200, Saratoga Springs, Utah 84045

DRAFT CITY COUNCIL MINUTES

WORK SESSION-Commencing at 5:30 p.m.

Present:
Council Members: Mayor Miller, Councilwoman Baertsch, Councilwoman Call, Councilman McOmber, and Councilman Willden
Absent Council Members: Councilman Poduska
Staff: Lori Yates, Mark Christensen, Spencer Kyle, Kevin Thurman, Chief Jess Campbell, Jeremy Lapin, Owen Jackson, Kimber Gabryzsak, Mark Edwards, Chief Andrew Burton
Others: Chris Porter, Sue Alexander, Ryan Poduska, Karalyn Becraft, Jennifer Klingonsmith, Frank Morgan Laura Ault, Craig Call, Dave and Dennese Snarr, Syloanus Saltoza, Andrew Snarr, Kristie Hepworth, JD Hepworth, Mason Bartlett, Paul Watson, Robert Money, Debra Buffo, Dan Griffith

1. Library staffing levels.

This item was continued for a future City Council next meeting.

2. Discuss the Award of Bid for Crack Seal.

Mark Edwards briefly spoke of the upcoming bid for the City Wide Crack Seal project.

The Council discussed road that are in need of crack seal repairs.

3. Request to reserve City Park for Westlake Lacrosse

Owen Jackson indicated that the City has been approached by the Westlake Lacrosse team to possibly utilize City fields for this sport. There are many benefits but also challenges with allow this to take place. Staff is looking for direction from the Council at this time.

The Council and staff discussed if allowed, what challenges this would create when scheduling the parks for other sporting events. They expressed concerns with how this sport would damage the grasses and the cost of repairing/replacing the grass.

At this time the Council wasn't willing to allow the use of City property for the Lacrosse team.

4. Discussion of Park prioritization.

Mark Edwards reviewed the list of park and the prioritization of those parks.

5. City Council Goal setting.

The Council wasn't able to review their goals at this time due to time limitations.

6. Strategic Planning.

Mark Christensen indicated that this item is a continuation from the Council retreat that was held in January. Dan Griffith was present to review those options along with the pricing.

The Council discussed possible options and asked that Dan facilitate additional options at this time.

POLICY SESSION- will follow Work Session.

Present:
Council Members: Mayor Miller, Councilwoman Baertsch, Councilwoman Call and Councilman McOmber, and Councilman Willden
Absent Council Members: Councilman Poduska
Staff: Lori Yates, Mark Christensen, Spencer Kyle, Kevin Thurman, Chief Jess Campbell, Jeremy Lapin, Owen Jackson, Kimber Gabryzsak, Mark Edwards, Chief Andrew Burton
Others: Chris Porter, Sue Alexander, Ryan Poduska, Karalyn Becraft, Jennifer Klingonsmith, Frank Morgan Laura Ault, Craig Call, Dave and Dennese Snarr, Syloanus Saltoza, Andrew Snarr, Kristie Hepworth, JD Hepworth, Mason Bartlett, Paul Watson, Robert Money, Debra Buffo

- **Call to Order by Mayor Miller**
- **Roll Call.**
- **Invocation/Reverence was given by Councilwoman Baertsch**
- **Pledge of Allegiance was led by Officer Champagne**

Mayor Miller opened the public input.

Chris Porter expressed his concerns with the proposed increase to the water services. The City should be involved with what the residents do with their yards. The HOA's should be dealing with the restrictions not the City. Allow the property owners to use their property as they see fit.

Mayor Miller closed the public input.

Chief Andrew Burton introduced Ryan Snarr as a new police officer to the Saratoga Springs Police Department. Mayor Jim Miller then swore in Officer Snarr.

POLICY ITEMS

1. Consent Calendar:
a. Award of Contract for Utility work services.
b. Preliminary Plat for Landrock Connection located south of the intersection of Valley View and Grandview Court, Clay Peck, applicant.
c. Preliminary Plat for Saratoga Springs Plat 16A located at 1700 South 240 East, Peter Staks, applicant.
d. Preliminary Plat for Harvest Point Commercial located at the southwest corner of Redwood Road and Springhill Drive, Ken Berg, applicant.
e. Final Plat for Mountain View Estates

Councilwoman Baertsch asked to pull item 1.e from the consent calendar to allow for further discussion.

Councilwoman Call asked to have items 1.b, 1.c, and 1.e pulled from the consent calendar to further discuss those items.

Councilwoman Baertsch made a motion to approve consent calendar item #1 the Award of Contract for Utility work services to S and L Landscape Inc. The motion was seconded by Councilwoman Call. Aye: Councilwoman Baertsch, Councilwoman Call, Councilman Willden and Councilman McOmber. Motion was unanimous.

Councilwoman Call asked that the consent items 1.b, 1.c, and 1.d be pulled from the consent calendar for further discussion. The Council agreed to pull the items allow for further discussion.

Consent Calendar Item 1.b. (Preliminary Plat Landrock Connection).

Councilwoman Call thought that the frontages to these lots were 80 feet. Also would like to see that Lot 11 is noted to be a corner lot. The front of lot 9 shows to be located on the street side and not the cul-de-sac, does the Code define the location of the front door.
Scott Langford indicated that the applicant is aware that the frontage requirements must be met and a variance will not be asked for. Scott indicated that the final plat must meet the current Code requirements. The applicant has the option to choice the location of the front for lot 9 but we will talk to the applicant regarding this matter.
Councilwoman Baertsch suggested that the garage on Lot 9 face the cul-de-sac.

Councilwoman Baertsch made a motion to approve Preliminary Plat Landrock Connection located south of the intersection of Valley View and Grandview Court, Clay Peck, applicant including the staff's findings and conditions listed in the staff report dated February 18, 2014. Motion was seconded by Councilwoman Call. Aye: Councilwoman Baertsch, Councilwoman Call, Councilman Willden, and Councilman McOmber. Motion was unanimous.

Subject to:

1. **That the Preliminary Plat shall be amended to reflect all the requirements of Code Section 19.04.13 including and not limiting to amending the lot widths in Phases 1 and 3 to meet the minimum lot width requirements of 80 feet.**

Consent Calendar Item 1.c. (Preliminary Plat for Saratoga Springs Plat 16A).

Councilwoman Call asked that staff provide an introduction to this item and allow the applicant to comment on this item.
Scott Langford presented the preliminary plat for Saratoga Springs Plat 16A which is being proposed as a 3 lot subdivision.
Laura Ault with the Division of Forestry, Fire, and State Land said that a boundary stipulation was settled with Wardley Development in 2000 and they agreed to complete the trail along the east side of Amanda Lane. Once the trail is completed Wardley Development will deed the trail to the State Lands.
Councilwoman Call asked that once the trail is constructed will the land become sovereign lands.
Laura Ault said that is correct, and pointed out to the council the property lines.
Councilwoman Call if the council didn't require the construction of this trail and to accept a trail that would be more adjacent to a street and more inland what would become the sovereign land boundary?
Laura Ault isn't comfortable answering this question but would prefer if the trail was built lake side.
Peter Staks indicated that the outside boundary lands would be deeded to the State.
Councilwoman Baertsch had thought that the trail would be located above the road if permission wasn't grant along the shoreline.
Peter Staks there is an existing trail adjacent to Centennial.
Councilwoman Baertsch is that the sidewalk?
Peter Staks said that is correct.
Peter Staks said that we are complying with what is being required by the State.
Councilwoman Call asked if a trail is currently located behind Amanda Lane? Peter Staks said that a trail is not currently built along there at this time.
Councilwoman Call asked when the trail would be completed and meets the requirements by the State.
Peter Staks indicated that he wasn't sure of the time line for the completion of the trail; there are a few issues that need to be addressed.
Councilwoman Call said that the proposed trail brings concern because it doesn't currently connect with an existing trail to the north or south.
Peter Staks indicated that he is aware of this matter and trying to be proactive.
Peter Staks asked if the Council could waive condition #3 in their motion. He feels that requiring fencing for those 3 lots is unnecessary since fencing has not been a requirement for the existing lots that border the lake.
Kevin Thurman explained that the city has no authority to interfere with the developer and the State of Utah and the existing agreement.

Councilwoman Baertsch asked that since we are a subdivision of the state don't we up hold the contracts of the State.
Kevin Thurman that we have rights under a State contract.
Councilwoman Call recalls that a recent motion required that the Master Development Plan be amended if the trail was approved along the canal because the trail didn't meet the current city code.
Kevin Thurman indicated that he is not sure if that was an option for the council at this time.
Mayor Miller asked staff to review the conditions regarding the MDA and the
Councilman Mcomber would like to look at the fencing option and doesn't agree with the proposed fencing requirement. The lake provides a fence. He would like to see that the trail be built near the canal.
Councilwoman Call would like to see that the fencing options be brought back at final plat. She is fine with the construction of the trail.

Motion was made by Councilwoman Baertsch and seconded by Councilman McOmber to approve the Preliminary Plat for Saratoga Springs Plat 16A located at 1700 South 240 East, Peter Staks, applicant based on the findings and conditions listed in the staff report dated February 18, 2014. Aye: Councilwoman Baertsch, Councilman McOmber, Councilman Poduska, Councilman Willden and Councilwoman Call. Motion was unanimous.

Subject to:

1. **That staff bring back recommendations for fencing modification at the time of final plat.**

Consent Calendar Item 1.d. (Preliminary Plat for Harvest Point Commercial)

Councilwoman Baertsch made a motion to approve the Preliminary Plat for Harvest Point Commercial located at the southwest corner of Redwood Road and Springhill Drive, Ken Berg, applicant including the findings and conditions listed in the staff reported dated February 18, 2014. The motion was seconded by Councilman Willden. Aye: Councilwoman Baertsch, Councilman Willden, Councilman McOmber and Councilwoman Call.

Consent Calendar Item #1.e. (Final Plat for Mountain View Estates)

Councilwoman Call recommended that 3 or 4 parking stalls be removed which would bring visible clarity to the northeast corner of Carlton Avenue and 400 North. The area is a blind spot and could create a safety issue.

Councilwoman Baertsch made a motion to approve the Final Plat for Mountain View Estates located at 450 West 400 North Sudweeks Holdings LLC, applicant including the staff's findings and conditions listed in the staff report dated February 18, 2014. The motion was seconded by Councilman Willden. Aye: Councilwoman Baertsch, Councilman Willden, Councilman McOmber and Councilwoman Call. Motion was unanimous.

2. Proposed Storm Water Management Plan.

Jeremy Lapin presented the storm water management plan; this plan is a 5 year plan which would be updated consistently.
The Council had no comments or concerns with the item.

Councilwoman Baertsch made a motion to approve Resolution R14-12 (2-18-14) a resolution amending the City of Saratoga Springs Storm Water Management Plan. The motion was seconded by Councilman McOmber Aye: Councilwoman Baertsch, Councilman McOmber, Councilwoman Call and Councilman Willden.

3. Concept Plan for Saratoga Hills Plat 6 located at approximately 350 West Grandview Boulevard, Castlewood, applicant.

Scott Langford presented the Concept Plan. The sloped areas would be amended and the old drainage core would allow for more buildable lots. There will be trail connectivity to the Parkside estates subdivision.
Councilman Mcomber is glad to see that this development will be single family homes. He also likes the connection of trail. The parking of Lots 650 & 651 could be an issue.

Councilman McOmber had no comments at this time.
Councilwoman Call how much of the open space is sensitive lands. She asked staff to explain that concern.
Scott Langford indicated that staff has had those same concerns and the applicant is aware of this matter, perhaps that applicant addresses this concern.
Duane Rasmussen, applicant indicated that he will note the open space tabulation with the sensitive lands. We will take a look at the concerns with the cul-de-sac. This plan fits the surrounding neighborhoods. He realizes the topography is difficult and there are other issues that will need to be address before moving forward.
Councilwoman Call asked that frontages located in the cul-de-sac meet the City's standards. She appreciates the applicant working with the City to mitigate any long term impact to the community.
Councilman Willden feels that this will bring a great addition to the City.
Councilwoman Baertsch would like to see the open space tabulations.
Mayor Miller asked how the drainage channel would be mitigated.
Jeremy Lapin stated that a there is a detention basin located above the development. The eastern drainage will remain in place this only affects the western drainage channel.

4. Public Hearing: Rezone and Concept Plan for Riverwalk located at 700 South 200 East, Dan Ford, applicant.

Scott Langford presented the Riverwalk, the applicant is requesting a rezone from R-3 to R-5. He then reviewed the proposed Concept Plan along with several options for Council review as well.
Cody Herbert, applicant indicted that the new plan will accommodate a second access to the south end of the parcel making it easier to enter onto Pioneer Crossing.

Mayor Miller opened the public input.

No public input at this time.

Councilwoman Call closed the public input and Councilman McOmber seconded that motion.

Councilwoman Call is less inclined to allow for larger lots. She is pleased with the trail plan. Was looking forward to accept the open space which would be maintained by the City but has noticed that concept plan has been revised but is fine with what is being presented tonight.
Councilman McOmber asked that the applicant work with staff with meeting the open space requirements. He is comfortable with the proposed concept plan.
Mayor Miller is pleased to see the trail near the river. He had a chance to speak with the applicant and he had mentioned potential features along the river trail.
Councilwoman Baertsch said she is fine with the trail connectivity. She asked the applicant to take into consideration a second access point. She is fine with the requested zone change since attached housing is not allowed. This
Councilman Willden stated that he is fine with the rezoning and the proposed concept plan.
Mayor Miller asked staff what is their recommendation with the particular property.
Kevin Thurman said that the request for a rezone is from R-3 to R-5 which would allow them 82 single family homes. The open space requirement is 15 percent. At this time a development agreement would be a benefit for both the City and the developer.
Councilwoman Call said it's too premature to talk about a rezone at this time and would like to see a development agreement be tied to the rezone.
Councilman Mcomber we are granting additional density and understands the importance of considering a development agreement with the rezone.
Kevin Thurman touched on the how the development could be applied.
Cody Herbert stated that he is fine with considering a development agreement.
Councilwoman Baertsch asked how much of the sensitive lands they able to build on are.
Scott Langford stated that they would be able to build beyond the flood plains.

Councilwoman Call made a motion to table the Riverwalk rezone at this time; the motion was then seconded by Councilwoman Baertsch. Aye: Councilwoman Call, Councilwoman Baertsch, Councilman Willden and Councilman McOmber.

5. Public Hearing: Rezone and Concept Plan for Beacon Point located at 4400 South 100 West, Paul Watson, applicant.

Scott Langford presented the Rezone and Concept plan for Beacon Point. Scott noted that the private roads will allow for driveways to be located of the collector road.

Josh Romney, applicant as we have planned this development the cost of the collector road became too expensive. We noticed that the drainage channel would need to be redirected along with designing a culvert. We feel this rezone would be a fit for the surrounding development.

Mayor Miller opened the public input.

No public input at this time.

Councilwoman Baertsch closed the public input and Councilman Call seconded that motion.

Councilman Willden understands that this is the only R-2 zone in the City and has concerns with changing the zone at this time.

Councilwoman Baertsch this is a rare parcel type and knows this is a need in the City but believes that this isn't the right development for this area. She is not inclined to change the zoning.

Councilman Mcomber asked if the applicant could provide clarification regarding the detention basin.
Paul Watson pointed out the drainage corridors and open channels that would be redirected into Utah Lake.
Councilman McOmber feels that we as a City need to continue fixing problems instead of making the developer take on the responsibility. The request for a zone change is extreme and wonders if there is a balance with the cost of the road and detention basin. There are conditions that could be recommended.

Councilwoman Call indicated that she was happy with the proposed larger lots. There is nowhere in the City with lots such as this size. The requested rezone is a large leap. Could the City burden the cost of the proposed collector road?
Jeremy Lapin as staff we tried to have a generic collector road built that could be reimbursed, but was not possible.
Councilwoman Call suggested that the applicant, staff and Council work on offsetting the cost for the infrastructure.
She would suggest the zoning remain R-2. There is no need for feathering to this development.
Josh Romney said that if the zoning was to remain R-2 they would lose money because of the expense of the project.
Councilman McOmber asked staff if it would be possible to zone the property to R-3. Kimber Gabryszak unfortunately with the removal of the PUD it's not an option.
Councilwoman Call asked staff if only 50 homes could be built if this development was approved due to the pending sewer connections.
Jeremy Lapin stated that the sewer flows are being amended and may allow for more sewer connections for additional lots.

Councilwoman Baertsch made a motion to deny the rezone for Beacon Point located at 4400 South 100 West, Paul Watson, applicant. The motion was seconded by Councilwoman Call. Aye: Councilwoman Baertsch, Councilwoman Call and Councilman Willden. Nay: Councilman McOmber.

6. Concept plan for Premium Oil located at 2114 North Redwood Road, RBD Construction, applicant.

Sarah Carroll presented the Premium Oil Concept Plan. Staff and the applicant are looking for feedback from the Council at this time.
The Council briefly discussed the number of parking stalls that are being required of by the applicant and asked that staff review the park requirements.
Councilman Willden is fine with the proposed setbacks.
Councilwoman Baertsch is nervous with the 10 foot setback and that there is no landscaping near the carwash.
Councilwoman Call the setback on the south side of the property makes her nervous. She would like to see a screen buffer near the carwash if possible.
Councilwoman Baertsch stated that she is uncomfortable with allowing the carwash next to be located next to a business.
Mayor Miller said he is fine with the proposed plan.
Councilman Mcomber asked that staff to work with the developer on the setbacks that will work for this particular plan.

7. Amending the City of Saratoga Springs Code, Section 8.01.03, Water Requirements.

Jeremy Lapin briefly reviewed the amendments with the Council.
The Council was fine with the amendments presented by staff.

Councilwoman Baertsch made a motion to approve Ordinance 14-5 (2-18-14): An ordinance amending Section 8.01.03, Water requirements. Motion was seconded by Councilwoman Call. Aye: Councilwoman Baertsch, Councilwoman Call, Councilman McOmber and Councilman Willden. Motion was unanimous.

8. Proposed Utility Rate Fee adjustment.

Matt Millis presented to the Council the proposed adjustments. This presentation included the briefly discussed the proposed culinary rates for residential, proposed non residential rates for culinary, comparison of current and proposed residential culinary rates. The proposed secondary water rates, proposed annual culinary/secondary rate increase, conclusion of rate structure, and the secondary water rate structure.
Councilman Willden wouldn't be in favor of this but understands the changes that need to take place due to our secondary system.
Councilwoman Baertsch understands there is a deficit with the secondary water system. Understands the residents' concerns with bonding for such a project but at this time it is necessary this is the least increase of rates for the residents. This is an area that we need to bite the bullet.
Mayor Miller stated that this is a needed and know that this is the least impactful way of addressing the utilities.
Councilman McOmber echoed the comments that have been made. This is a serious tax rate on the residents but this is needed to control the abuse of secondary water by the residents.
Councilwoman Call there is a need for this and for many residents the rates may actually decrease. She would like to see the secondary water meter be completed the beginning of 2015 when the irrigation season starts. She suggested that the residents be informed of why this increase is necessary.

Councilman Willden made a motion to approve Resolution R14-13 (2-18-14): A resolution amending the City of Saratoga Springs consolidated fee schedule making this effect for the March billing cycle and to include the findings and conditions listed by staff. The motion was seconded by Councilman McOmber. Aye: Councilman Willden, Councilman McOmber, Councilwoman Call and Councilwoman Baertsch. Motion was unanimous.

1. Directing staff to begin the secondary water metering system at the beginning of the 2015 irrigation season.

9. Reports.

The Mayor and Council had no reports to provide tonight.

Councilman McOmber made a motion to enter into closed session at for the purpose of personnel and potential litigation. The motion was seconded by Councilwoman Baertsch at 7:40 p.m. Aye: Councilman McOmber, Councilwoman Baertsch, Councilman Willden and Councilwoman Call.

Present: Mayor Miller, Councilman Willden, Councilwoman Baertsch, Councilman McOmber, Councilwoman Call, Mark Christensen, Lori Yates, Kevin Thurman and Spencer Kyle.

Closed session ended at 9:55 p.m.

Motion to adjourn the policy session at 9:55 p.m. was unanimous.

_____ _____

Date of Approval **Lori Yates, Recorder**

City of Saratoga Springs
Planning Commission Meeting
May 22, 2014
Regular Session held at the City of Saratoga Springs City Offices
1307 North Commerce Drive, Suite 200, Saratoga Springs, Utah 84045

Draft Planning Commission Minutes

Present:
Commission Members: Jeff, Cochran, Jarred Henline, Kirk Wilkins, Sandra Steele, Eric Reese, Hayden Williamson
Staff: Lori Yates, Sarah Carroll, Nicolette Fike, Scott Langford
Others: James Jones, Mike Helmantoler, Aric Jensen, Tami Buckland, Chris Raver, Joe Hitzeman, Cornell Brown, Joel Darby, Satt Jenson, Miranda Jensen, Ryan Bybee, Arnold Hansen, Paul Watson, Jeff Nielsen, Jeremy Weller, Jim Wherler, Jennifer Hansen, Steve Sowby
Excused: Kara North

Call to Order - 6:36 p.m. by Eric Reese, Vice Chairman
Pledge of Allegiance - led by Hayden Williamson
Roll Call - Quorum was present

Input was called for from the Commission, no comments were given at this time.

Public Input Open by Eric Reese

Michael Helmantoler -, wanted to know who was responsible for upkeep on the area on the north side of Jordan Ridge Blvd. which is currently full of weeds. Also, on Riverbend, are there plans for water access? Sarah Carroll – replied that Jordan Ridge Development was responsible, and no there are not plans for water access. She would speak with him later on his questions outside of meeting.

Meeting turned over to Commission Chair Jeff Cochran.
Public Input Closed by Jeff Cochran

4. Public Hearing: Preliminary Plat for Lake Cove located at 3168 South Spinnaker Drive, Ron Johnston, applicant.
CONTINUED TO JUNE 12, 2014 PLANNING COMMISSION MEETING.

5. Public Hearing: Preliminary Plat for Hillcrest Condominiums Phase 3 located at 1900 North Crest Road, Nate Hutchinson, Flagship Homes, applicant.
CONTINUED TO JUNE 12, 2014 PLANNING COMMISSION MEETING.

6. Public Hearing: Site Plan and Conditional Use for Platinum Car Wash located at 1413 N West Commerce Drive, Gary Hadfield, applicant.
CONTINUED TO JUNE 12, 2014 PLANNING COMMISSION MEETING.

Motion by Sandra Steel to continue the Public Hearing: Preliminary Plat for Lake Cove located at 3168 South Spinnaker Drive, And Preliminary Plat for Hillcrest Condominiums Phase 3 located at 1900 North Crest, And the Site Plan and Conditional Use for Platinum Car Wash located at 1413 N West Commerce Drive, to the meeting of June 12, 2014. Second by Kirk Wilkins. Aye: Sandra Steele, Hayden Williamson, Kirk Wilkins, Jarred Henline, Eric Reese and Jeff Cochran. Motion passed unanimously.

7. Public Hearing: Master Development Agreement Extension and Revision for the Riverbend development located at approximately 900 North Redwood Road, Knowlton General, applicant.

Sarah Carroll – presented the item. Applicants are requesting to renew and extend and modify the existing MDA. Applicant would like to request the same road layout to utilize existing lines and to continue the same road widths as already started. Staff recommends they keep basketball half court, 5 areas with concrete pad and picnic table 16'x20' pavilion and one medium size playground. She made note of the wetland area and what would be needed to comply to build there. She reviewed Staff findings and conditions. And recommended adding a condition related to the amenities.

Aric Jensen, for applicant – they are pleased with what staff has presented and are willing to move forward quickly when approved.

Public Input Open by Jeff Cochran

Cornell Brown, HOA president for Riverbend – noted that in these developments the amenities seem to get lost in the modifications of the plats. Parking with the smaller streets is becoming a problem and safety issue. Kids are playing in the streets because parks have not been developed yet. Breaking up into smaller lots is advantageous for them.

Tami Buckland – Parking has become a significant issue, with the size of the units, many units have multiple cars (passed a picture of parking to commission) and not enough parking. Emergency vehicles cannot access units and it's unsafe for children. She has witnessed accidents almost happening because of vehicles parked in odd places. She recommends adding several more parking spaces in the new plan. The park they currently have was paid for by HOA and not developer. It's not designed for older children, but they use it and it gets destroyed.
Sarah Carroll – on Riverside drive it is a public road and city does not recommend any stalls that back on to it. Staff did recommend amenities for the new phase.

Jennifer Hansen – has a problem with one medium size park in the proposed amenities for children with that large of an age gap. She feels it is important to have a tot lot. What they have is not enough for the little children, the bigger kids are taking over and it's a dangerous condition. The park is also in horrible repair. And she also agrees they need more parking.

Joe Hitzeman – also feels there is not enough parking, people parking in field and out of stalls. He also mentioned unsafe conditions for kids with them playing in the street because of no amenities for them to use. Feels he was promised things when he moved in and nothing has been built yet.

Arnold Hansen – echo's what others have said about amenities and parking. He would like the developer to make more curb appeal on Redwood Road. He feels the complex is nice but entrance doesn't reflect well on development or city.

Chris River – seconds what everyone else has said. Parking has been a huge problem, it's a safety hazard for kids in street, and parking in muddy field.

Public Input Closed by Jeff Cochran

Sandra Steele – has no problems with setbacks as long as driveways are a minimum of 20ft. She has issues with leaving the road the way the project started out, she feels a modified curb would work better and is concerned about undulation of driveways.
Jeff Cochran – said it would be difficult to put a high back curb and gutter in with this space.

Scott Langford – showed the new plan was a modified curb and gutter. Their intent is to continue the existing cross section.
Sarah Carroll – indicated they could have the developer change the detail.
Sandra Steele – is concerned about the parking, she would ask the developer if they could please add more parking and disperse it throughout development. Asked on garage size –
Aric Jensen - said old phase is one stall and new phase is two.
Sandra Steele - asked about engineer's requests being met, specifically with roads and turn-arounds meeting all standards. (Item 6 in engineer report.)
Staff and Developer - replied that the design today meets what engineer has asked.
Sarah Carroll – indicated that it would be fair to add that sentence, that the existing cross-section could be continued.
Sandra Steele – agreed that amenities were a must. She would leave it up to staff to work with developer as to what kind of playground is required.

Hayden Williamson – asked which phase Riverside drive would be installed
Sarah Carroll – answered that it would be all three phases, they all have portions.
Hayden Williamson – in doing that in all 3 phases will it still meet fire code requirements?
Sarah Carroll – replied that it would be reviewed with each plat as they would need to provide turn-arounds.
Hayden Williamson – feels that adding a condition concerning this issue of Riverside drive would be good. Feels developer should sit down with residences to see what they need and bring it back to the city for review.

Eric Reese – encourages adding parking where possible and having HOA work with developer on amenities. He feels curb appeal will be addressed and that it should look nice coming into the development.

Kirk Wilkins – directed questions to staff on the option of city if the MDA application expires.
Sarah Carroll – if MDA expires they don't have a way to continue similar setbacks and any new plan would have to meet current city codes.
Kirk Wilkins – said the setbacks weren't a concern. He doesn't have problems with road extension. Would echo comments earlier on amenities that developer work with city and create amenities that will help solve problems. Question on why the roads were 2' narrower as noted in the packet.
Sarah Carroll – explained that recently the City Council adopted new road cross sections that are 2 feet wider. If they increase current plat to current code then they can't have 20' drives.
Kirk Wilkins – question on the unit in the flood plain, if the wetland is replaced where would it be?
Sarah Carroll – replied that the developer would have to come up with a plan to replace it and if it can't be done then the developer would not be able to build lots in that area in later phases.
Scott Langford – they may have an option to buy areas outside at a ratio of 7 to 1 that is expensive and a long process.

Jarred Henline – does see the concerns with parking and amenities but this is really a review for an extension and sees the issues coming up later at preliminary plat. He is not sure how to put those conditions in without being specific. He asked why 7 years on the extension? He feels it should be shorter.
Sarah Carroll – something in code about the time allowed, 7-10 years but you could approve a shorter time frame.
Jarred Henline – he does understand the residences concerns and feels there are options to work out with developer, but our focus today is if we are going to continue this extension or not and for how long and then perhaps other problems like park and parking may come after that.

Jeff Cochran – thanked public for their comments. The Master Development Agreement is in place for 7 years and things change, if we give them a long time it may not be consistent with current city standards. He concurs with Mr. Henline. He asked for clarification on item in the report about utility placements currently laid out in future roads and if they really needed to be moved.

Sarah Carroll – if they didn't move them it would fall under driveways or things like that. The city engineer prefers they are in right of ways.
Jeff Cochran – feels they could meet the new standards and keep utilities in roadways. He asked developer to address that.
Aric Jensen – they did a layout that took into account all current standards. When they did that the utilities were falling under drive pads and things like that. They filed a variance application with new layout. At that time Kimber did not prefer asking for the variance and asked them to come with MDA extension instead.
Jeff Cochran – are there conditions they could put on MDA?
Sarah Carroll – we are giving up something by extending setbacks; things are given to them so we can ask for things from them. It would have to be run by the City Attorney.
Aric Jensen – does not disagree with what neighbors have said. He is new to the firm, has identified places they can add some parking stalls. With the wetland issues they are aware of them and the process they would need to go through. In terms of landscaping out front they have already contacted their landscaper to work on it. He feels they can address all the issues brought forward and doesn't have a problem going to City Council with these conditions.

Jeff Cochran – reviewed thoughts from council on the roadway being completed early, amenities and working with neighborhood HOA, roadway widths and keeping them the same.
Sandra Steele – is concerned with length of time for extension. When they grant extensions how long do they let MDA's go? Do we continue to give extensions and then things will never get up to city standard.
Eric Reese – suggested adding playground issue, language to allow HOA to suggest something.
Kirk Wilkins – perhaps add ratios concerning parking.
Hayden Williamson – concerned with adding ratios, but we could put something in to address additional parking.
Jarred Henline – should we table this and have the City Attorney look at it first and have developer bring it up to our standards first before we send it on to city council. He is not comfortable with suggesting items on parking or amenities and come up with good wording on the fly. We shouldn't give up something without getting what we want. He doesn't think legally we could come up with a good solution tonight.
Hayden Williamson – if we tabled this could we hear it before it expires in June?
Scott Langford - indicated that the City Council will get a copy of the planning recommendations and it would be hard to continue it longer with deadlines. We could tighten it with developer before we go to City Council.
Sandra Steele - could we extend it for a few months to be able to continue more discussions?
Sarah Carroll – we have extended other MDA's while they worked on revising it. If they decide to table or continue it they could still take it to City Council to get a short extension while they work it out.
Aric Jensen – said when we have a fixed date the contract expires on that date. If the City Council takes action on it to extend it than they are comfortable that the Council has taken action but contract law in the state is pretty explicit, if it is tabled and no action is taken then their contract will run out. His concern is that if it's tabled and council doesn't hear it and take action then they are back to variance process. He is good with Commission adding all the recommendations to take to Council.

Motion by Hayden Williamson to forward a positive recommendation to the City Council for the Riverbend MDA extension and modification with Findings and Conditions found in the staff report with language added that the developer work with the city and current residents to address concerns regarding parking, to address concerns regarding amenities, and to work with the city with concerns regarding the timing for Riverside drive. Seconded by Eric Reese.

Jeff Cochran – asked a question on the motion - would Mr. Williamson consider that applicant also work with city staff to consider putting the current roadway width in.
Hayden Williamson – he would not, he is in favor of keeping the roadway consistent with the project.

Aye: Sandra Steele, Hayden Williamson, Eric Reese, Kirk Wilkins. Nay: Jarred Henline and Jeff Cochran.

8. Concept Plan for Sierra Estates Senior Housing located at 350 West 400 North, Ross Welch, applicant.

Sarah Carroll – presented the plan and reviewed staff recommendations.

Steve Sowby, for Applicant – appreciated the opportunity to come back with improved plan. They have implemented all suggestions previously given by commission. They ask for approval tonight and agree with all staff recommendations.

Sandra Steele – for van accessible spot for employee parking, suggests applicant make sure access space is on passenger side. She asked previously that they comply with state statutes and that the statutes changed this past April.

Hayden Williamson - likes the new plan and parking.

Eric Reese – likes the plan.

Kirk Wilkins – looks like they have done everything asked, good job.

Jarred Henline – thinks it looks good.

Jeff Cochran – indicated his thanks for listening to the commission and coming back with improved plan.

9. Public Hearing: Preliminary Plat for North Saratoga Center Plat A located at 2175 North Stagecoach Drive, Ryan Bybee, applicant.
10. Public Hearing: Site Plan and Conditional Use permit for Unique Autobody located at 2175 North Stagecoach Drive, Andrew Bollschweiler, applicant.

Jeff Cochran asked that we listen to items 9. and 10. Together and hear public comment together for them.

Scott Langford – presented the items.

9. Applicant has applied for preliminary and final plat approval as it goes to City Council. This is the only office/warehouse zone in the city.
10. Showed overlays and touched on unique needs of business. Applicant raised a question of dumpster location, they feel best spot would be enclosed within building and have planned for that. As you approve site plan it includes signage, that won't be a separate item. No additional signage is requested for storage unit.

Ryan Bybee, Applicant – one comment on road for fire access, they had discussion about road extension of Stage Coach Blvd. that would be developed in future, he suggested for access that perhaps building it now would be a better option than making a temporary turn-around.

Public Input Opened by Jeff Cochran
No public input at this time.
Public Input Closed by Jeff Cochran

Jarred Henline – he is good with item 9. On 10, if they change their minds on the garbage cans and decide they need more what would happen.
Scott Langford – they would have to comply with code and provide enclosure for that.

Jarred Henline – on the sign, they need to pick one of the options.

Kirk Wilkins – wanted to know what style of fence on west side.
Scott Langford – applicant has submitted plan for 6' rod iron style.
Kirk Wilkins –has a concern that cars would be parked there that could be seen from main road.
James Jones, Architect – the building is larger to have cars parked inside, so they should not be parked outside at all.
Kirk Wilkins – expressed concern with trash inside and possibly containing bio hazards and other potential hazards.
Scott Langford – this is a conditional use permit; Commission could put an additional condition to make sure cars were not stored in NW portion of lot.
Kirk Wilkins – would like to add a condition that no broken down cars are parked along North and West side. Also pick one of the sign options.

Eric Reese – doesn't have any concerns, but wanted more detail on improving road for fire access.
Ryan Bybee – showed where it was on the overlay and the problems with a temporary turn.
James Jones – said the road is already dedicated so they have talked with staff to see what was needed to get it in this year.
Eric Reese – would support condition of no cars being worked on stored outside. Would let applicant do what they have planned with dumpsters.

Hayden Williamson – likes the look of it. He would support condition of no cars on NW sides.
Jeremy Weller – said no cars would be out front and exposed, adding there are no doors on front of building.

Sandra Steele – concern with parking, there are 4 spaces provided for storage units, is there an onsite manager?
Scott Langford – yes there is an onsite manager and they do live there. Manager indicated that parking was never an issue. Extra cars usually park on Stagecoach or further in near units.
Sandra Steele – thinks there should be separate parking for manager and that there should be a Van Accessible space that meets standards in width. She suggested a condition about if additional garbage containers would be needed that they install surrounds as in code.

Jeff Cochran – reviewed comments for item 9. Handicap parking spot. Item 10. Condition that no parking on N. and W. side and discussion on signs and discussion on trash container
Sandra Steele – feels more parking should be added for item 9.
Jarred Henline – also feels more parking would be good.
Ryan Bybee – noted that there is space inside the facility for manager to park if he needs to use it.

Motion by Jarred Henline to recommend approval to the City Council of the North Saratoga Center Plat A Preliminary Plat, located at approximately 2175 North Redwood Road, based on the findings and conditions in the report and add two additional conditions that they come into compliance with statutory code regarding handicap parking, and maybe meet in the middle that during business hours no employee can park in customer spaces. Second by Sandra Steele. Aye: Sandra Steele, Kirk Wilkins, Jarred Henline, Eric Reese and Jeff Cochran. Nay: Hayden Williamson.

> Hayden Williamson – voted nay because he is uncomfortable with attaching stipulations regarding existing parking based on approval to add more units. They know their business better than we do. He feels it's not the proper role of government to force them to have adequate customer parking. The handicap one does have a little weight with him but tends to go with the spirit of the law on that.

Motion (withdrawn) by Jarred Henline that Based upon the evidence and explanations received today, (I move) that the Planning Commission forward a positive recommendation to the City Council to approve the

Amended Site Plan for the North Saratoga Center Office Warehouse Development (Phase 2B) on property located at approximately 2148 North Stagecoach Drive, with the findings and conditions found in the report and also an added condition that cars on the property to be serviced should be parked within the structure and not on the outside. Second by Kirk Wilkins

Hayden Williamson – understood on the stipulation on parking, that cars being serviced would be allowed to be parked on the east side.
Scott Langford – commented that it might be better to tie that condition to the use plan, not on the site plan.
Jarred Henline - Motion withdrawn without objection.

Motion by Jarred Henline: Based upon the evidence and explanations received today, I move that the Planning Commission forward a positive recommendation to the City Council to approve the Amended Site Plan for the North Saratoga Center Office Warehouse Development (Phase 2B) on property located at approximately 2148 North Stagecoach Drive, with the findings and conditions in the report. Second by Eric Reese. Aye: Sandra Steele, Kirk Wilkins, Eric Reese, Jarred Henline and Jeff Cochran, Hayden Williamson. Motion passed unanimously.

Jeff Cochran – notes items discussed for use plan of cars not on North or West, signage to choose one, and trash containers.

Motion by Jarred Henline Based upon the evidence and explanations received today, I move that the Planning Commission forward a positive recommendation to the City Council to approve a Conditional Use Permit to allow "Automotive Repair, major" on the west 1.66 acres of property located within the North Saratoga Center Office Warehouse development (Phase 2B), located at approximately 2148 North Stagecoach Drive, with the findings and conditions found in the report and added conditions being that cars on the property being serviced should be parked within the structure or on the East side only, and that they may only have one sign not two. Second by Eric Reese.

Hayden Williamson – on the parking would Mr. Henline be willing to substitute to say "cars cannot be parked outside of the fenced area," because they have 5 stalls on the North side of the building that are behind fenced area and it would be protected by fence?
Jarred Henline – answered no, he is good the way it was stated.

Aye: Sandra Steele, Kirk Wilkins, Jarred Henline and Jeff Cochran, Eric Reese, Hayden Williamson. Motion passed unanimously.

11. Public Hearing: Rezone and Concept Plan for Beacon Point located 4400 South 100 West, Paul Watson, applicant.

Scott Langford – presented this item and staff findings and recommendations. There are some questions on culinary and secondary water in the area and fire protection zone. Applicant would be required to submit a fire protection plan and assurance that homes would be protected. Chief Campbell indicated an additional study would need to be made.

Paul Watson, Applicant – they will work out issues with water with staff; they know where the problems are and feel it will be ok. They agree with staff recommendations. They would not like to bring collector all the way down to Redwood Road. UDOT is ok with the accesses.

Public Input Open by Jeff Cochran

Scott Jensen – water pressure is definitely a concern. Also with retention ponds, there is an existing ditch that helps prevent flooding, will that be maintained?
Scott Langford – said in phase one they will be diverting water into retention ponds.
Paul Watson – with 100 flood plain two basins are needed, and they are putting them in phase one.
Scott Jensen – with added access will Redwood Road be adding lanes, as in a turn lane?
Scott Langford – they would be required to improve the frontage.
Scott Jensen – wanted to make sure lot sizes were consistent with current neighborhood.
Scott Langford – replied the average lot size was around 10,000 ft.

Miranda Jensen – worried about traffic coming in during first phase through the existing neighborhood because of the traffic currently there. There are children playing in the street and would there be construction access.
Jeff Cochran – construction access is required that are not through the neighborhood.
Miranda Jensen – wanted to know if all new traffic for residences was going to be routed through current roads.
Scott Langford - they would use existing roads for phase one and then phase two would complete the access to Redwood Road.

Public Input Closed by Jeff Cochran
Jarred Henline – access on open space, some of it is steep hill?
Scott Langford - yes they will need to specify sensitive land on the plat, only 50% is allowed by code for open space.
Jarred Henline – asked Paul to address water issues.
Paul Watson – later phases will bring new pipelines and they feel it will have sufficient pressure. They will make sure existing homes have pressure
Scott Langford - staff leaning towards rezone being conditioned upon preliminary plat approval, and those issues being resolved.

Kirk Wilkins – asked about the elevation difference between some lots and once the detention basin is full and water follows little river, he is concerned the houses would be impacted.
Paul Watson– reviewed different elevations, and said the channel is about 12 feet wide and 8' deep. Models have been done and engineering, it's sized to handle the drainage.
Kirk Wilkins – would suggest that there isn't a rezone without conditions. He agrees corner lots need to be increased in size to meet code. He is still concerned with water pressure.

Eric Reese – likes the trail system and would echo what others have said about the MDA.

Hayden Williamson – also concerned about 3 lots backing on to collectors especially about the one close to Redwood Road.
Paul Watson – we could put a restriction on plat that forces a turn on the driveway.
Hayden Williamson – Concerned about fire access during phase1 before phase with main access is built. Could temporary emergency access be put in place?
Paul Watson – replied that he would have to work it out with UDOT.
Hayden Williamson – he would like to see that added as a note. He would like to see approval based upon recording of preliminary plat.

Sandra Steele – this is the last R2 in the city. She is concerned with fire issue and defensible area, and upkeep of defensible area. She is concerned with water pressure issues. She doesn't like 60 lots in phase 1 all driving through the current neighborhood. She feels it's too premature to come to commission tonight and would not support a rezone now.

Jeff Cochran – is struggling with the R4 zone, thinks R3 may be more acceptable within the city. He is a little concerned with the collector road. He thinks water issues could be worked out in time.
Paul Linford– pointed out that 100 ft. south the area is zoned between R10 and R20 and feels the R4 zone would help with that transition from this area to that.

Jarred Henline – feels added traffic in existing neighborhood for phase 1 might be too much.
Eric Reese – asked staff if the traffic was a valid concern?
Scott Langford – referred to engineers report and his expertise.
Hayden Williamson – on a condition to tie into Redwood road, would we make it a condition of rezone or on a condition for final plat approval.
Scott Langford – thought it would benefit everyone best if it was articulated it in a condition.

Motion made by Hayden Williamson, Based upon the evidence and explanations received today, I move that the Planning Commission forward a positive recommendation to the City Council to approve the rezoning of approximately 63.64 acres of property as shown in Exhibit 2 and generally located at 4300 South Redwood Road from the R-2 to the R-4 zone, with the findings and conditions listed in the staff report, with the additional conditions that rezone does not happen until "final" plat is recorded, and that collector road to Redwood Road is included in phase one. Second by Eric Reese.

Eric Reese – a MDA had been talked about?
Scott Langford – that would be the third option in staff report, condition in report for this motion is that it doesn't take effect until preliminary plat. That is so there is some entitlement at that point and developer could post bonds and start construction.
Jeff Cochran – believes the question is would Mr. Williamson accept the MDA option?
Hayden Williamson – his goal was to make sure that the city is able to determine the final product and not just rezoning it.
Scott Langford - recommends second option listed in staff report on option 2, conditions on page 6.
Hayden Williamson – does not accept MDA as part of his motion.

Nay: Sandra Steele, Kirk Wilkins, Jarred Henline and Jeff Cochran, Eric Reese, Hayden Williamson. Motion **failed** unanimously.

Motion was made by Hayden Williamson that: Based upon the evidence and explanations received today, I move that the Planning Commission forward a positive recommendation to the City Council to approve the rezone of approximately 63.64 acres of property as shown in Exhibit 2 and generally located at 4300 South Redwood Road from the R-2 to the R-4 zone, with the findings and conditions listed below in the staff report, specifically pointing out That the rezone shall take effect after the Applicant obtains Preliminary Plat approval. And the Preliminary Plat shall be substantially consistent with the attached Concept Plan. And that the primary access to Redwood Road be connected in phase one. Second by Eric Reese Aye: Kirk Wilkins, Hayden Williamson, Eric Reese. Nays: Sandra Steele, Jarred Henline, Jeff Cochran .

At 9:25p.m. a break was taken by Commission.
Meeting resumed at 9:31p.m.

12. Revision to the City of Saratoga Springs Land Development Code. (Section 19.05—Temporary Uses).
Continued discussion from May 08, 2014 Planning Commission, possible recommendation.

Scott Langford – reviewed the revision and discussion at last meeting. Revisions included removal of the parking requirement for all TUP's, replace with a requirement for approval of business within 300'. Added garbage standards. Creation of a separate section for mobile food vendors and incorporating additional clarifying standards such as duration and separation from residential areas. Prohibitions on operation as a

drive-through, prohibiting in park strips, and other standards. Reduction of the bond requirements to $250 on private property and $500 on public property, and creating an allowance for an annual bond for mobile food vendors.

Jarred Henline – numbering on pages 7 and 8 needs to be fixed. In paragraph 3a on page 8 says it has to be hosted by brick and mortar business, he would add that maybe they could be at a park "or in a public place, permission by the city." He feels the bond is still high but likes that they can choose a yearly option.
Eric Reese – what exempts a kid going out to the curb, like a lemonade stand.
Scott Langford – indicated most codes they had looked at were silent about the issue.
Hayden Williamson – thought they had discussed some wording about if on a private property it would be exempt.
Jarred Henline – recalled the discussion that they just didn't apply with this code, there is nothing that prevents them from doing so with this code.
Hayden Williamson – he thought they had talked about on the bond requirement that if they were in good standing that they could have that reduced.
Jeff Cochran – likes Commissioner Henline's thought that they have to be hosted by brick and mortar or a public place in the city.
Sandra Steele – doesn't think the city would allow it at any other time than civic events.
Hayden Williamson - if required to be hosted by brick and mortar only then why have a public property bond?
Sandra Steele - believes that fee would be for civic event times to clean up the park.
Hayden Williamson – the problem with requiring only brick and mortar business to invite or host the vendors is that it doesn't make sense for civic events like the splash?
Sandra Steele – then thinks there should be some phrasing that they would be allowed to go to public places during city events.
Jarred Henline – doesn't think the city should say to not do something (like allowing vendors at a public location) when the residences wanted it. Should let free market reign
Jeff Cochran – currently how it is written they cannot go to park, or public place for any event.
Kirk Wilkins – he has heard people say our city is hard to do business with, too many restrictions. He feels we should make changes to make it easier to deal with. Make easier restrictions.
Hayden Williamson – on second item 3b, he can see situation where they could be there longer than 8 hours and suggests allowing them to be here longer.
Jarred Henline – would agree to that.
Sandra Steele – noted that at another meeting it was set up for 12 hours a day, and others said no, only 8 hours. We need to move forward with this tonight, because there are other items waiting on this down the pipeline.

Motion by Jarred Henline to forward a positive recommendation to the City Council for the proposed amendments to Section 19.05 with the Findings and Conditions found in the report: with the added conditions: no. 1, that numbering from the two subparagraph 3's be corrected; That subparagraph 3a on page 8 be changed to also include (A mobile food vendor shall be permitted only when hosted by an existing brick-and-mortar business) "or upon public property with permission from the city." ; 3b, mobile food vendors shall not be parked for more than 8 hours a day in any location without first being given express permission from the city; And paragraph 10, the bond paragraph be changed to that after 6 months of good behavior the bond be reduced by half for those vendors who have been found to be in compliance to code. Second Hayden Williamson. Aye: Sandra Steele, Kirk Wilkins, Jarred Henline and Jeff Cochran, Eric Reese, Hayden Williamson. Motion passed unanimously.

13. Approval of Reports of Action

2 reports to act on

Riverbend and Temporary uses.

Scott confirmed recommendations.

Motion by Hayden to approve report of action on Master Development Agreement and Revision for the Riverbend development located at approximately 900 North and Redwood. Second by Sandra Steele. Aye: Sandra Steele, Kirk Wilkins, Jarred Henline and Jeff Cochran, Eric Reese, Hayden Williamson. Motion passed unanimously.

Motion by Hayden Williamson to approve the plan of action for the revisions to the City of Saratoga Springs Land Development Code, section 19.05 Temporary Uses. Second by Kirk Wilkins. Aye: Sandra Steele, Kirk Wilkins, Jarred Henline and Jeff Cochran, Eric Reese, Hayden Williamson. Motion passed unanimously.

14. Approval of Minutes:

1. March 13, 2014.

Motion by Eric Reese to approve minutes from March 13, 2014. Second by Kirk Williams. Aye: Sandra Steele, Kirk Wilkins, Jarred Henline and Jeff Cochran, Eric Reese, Hayden Williamson. Motion passed unanimously.

15. Commission Comments – no comments given at this time

16. Director's Report

Scott Langford – indicated that the next meeting will be a full agenda. Reported on items that had been forwarded to City Council.

Meeting adjourned by Jeff Cochran

Adjourn 10:05 pm

CITY OF SARATOGA SPRINGS

City Council
Staff Report

Site Plan and Conditional Use
Platinum Car Wash
June 17, 2014
Public Meeting

Report Date:	June 12, 2014
Applicant/Owner:	Gary Hadfield / Platinum Car Wash, LLC
Location:	1413 North West Commerce Drive
Major Street Access:	Commerce Drive
Parcel Number(s) & Size:	66:242:0003, portion of 66:242:0002, ~1.64 acres
Parcel Zoning:	RC, Regional Commercial
Adjacent Zoning:	RC
Current Use of Parcel:	Undeveloped
Adjacent Uses:	Dollar Tree, Chase Bank, IHC Clinic
Previous Meetings:	Concept Plan Review with PC (3/13/14)
Previous Approvals:	Walmart Final Plat was approved 6/12/07
Land Use Authority:	City Council
Future Routing:	City Council
Author:	Sarah Carroll, Senior Planner

A. Executive Summary:

This is a request for review of a Site Plan for a "Car Wash (full service)" within the RC zone, to be located at 1431 North West Commerce Drive. The site plan indicates the proposed layout for the car wash, including employee parking, service bays, office and waiting area, landscape areas, and self-serve vacuums to be located in the southeast corner of the site.

Recommendation:
Staff recommends that the Planning Commission conduct a public hearing, take public comment and discuss the proposed Site Plan, and choose from the options in Section "H" of this report. Options include forwarding a positive recommendation with conditions to the City Council, continuing the application, or recommending denial to the City Council.

B. Background:

The building lots were created with the "Saratoga Wal-mart Subdivision" plat that was recorded in 2007 (attached). The property is zoned RC and the site is comprised of Lots 2 and 3 in the southwest corner of this plat. The applicant is proposing to use 1.64 acres of the 2.12 acre site. This request will require a lot line adjustment application, approval and recordation prior to approval of the construction drawings. Lot line adjustments may be processed at a staff level.

Sarah Carroll, Senior Planner
1307 North Commerce Drive, Suite 200 • Saratoga Springs, Utah 84045
scarroll@saratogaspringscity.com • 801-766-9793 x 106 • 801-766-9794 fax

The Concept Plan was reviewed by the Planning Commission on March 13, 2014, and they expressed mixed support for the landscape reduction and suggested that landscaping be placed along the building. This concern has been addressed by adding five feet of landscaping along the east and west sides of the building.

The City Council reviewed this request on June 3, 2014 and supported the requested front yard landscape reduction from 20 feet to 10 feet, because there is 38.60% landscaping on the site. The Council recommended some articulation along the west elevation. To address this concern the applicant has updated the west elevation and it now includes trellises for plants to grow. If they add structural relief to this elevation they will not be able to meet other requirements, such as required landscape areas and buffers.

The site plan and conditional use application will be reviewed by the Planning Commission on June 12, 2014. That meeting will occur after the Council received this staff report; thus a report of action will be forwarded to the City Council after that meeting.

C. Specific Request:

The proposed Site Plan has a single commercial building that will provide a drive-through car wash, storage areas, detail service bays, and a waiting room. The building is a total of 10,696 square feet. The office and waiting room and associated storage room will be approximately 1,232 square feet. 29 parking stalls are proposed. 38.60 percent of the site is proposed to be landscaped and the applicant is requesting reduced landscaping within the front setback area adjacent to West Commerce Drive.

D. Process:

Section 19.13.04 of the City Code states that Site Plans require City Council approval after the Planning Commission holds a public hearing and forwards a recommendation. The City Code also requires that an applicant hold a neighborhood meeting for any non-residential development proposal adjacent to developed property in a residential zone. This project is not adjacent to a residential zone.

E. Community Review:

Per 19.13.04 of the City Code, this item has been noticed in *The Daily Herald*, and each property owner within 300 feet of the subject property was sent a letter at least ten calendar days prior to this meeting. As of the completion of this report, the owner of Autosspa has expressed frustration that car washes are now allowed in the Gateway area. When Autosspa was proposed they were not allowed in the Gateway. In July of 2013 the Code was amended to allow full-service car washes in the Gateway area. However, self-service car washes are still not permitted in the Gateway area.

F. General Plan:

The Land Use Map of the General Plan designates this property for Regional Commercial uses. The Land Use Element of the General Plan states "Regional Commercial areas shall be characterized by a variety of retail users including big box retail configured in developments that provide excellent vehicular access to and from major transportation facilities. Developments located in Regional Commercial areas shall be designed so as to create efficient, functional conglomerations of commercial activities."

Staff Conclusion: consistent. The site and nearby properties are currently zoned RC. Nearby uses include Chase Bank, Dollar Tree, IHC Clinic, etc. The proposed access lines up with the access for Chase Bank and Dollar Tree and is an adequate distance from the intersection of SR73 and West Commerce Drive. The City does not yet have a full-service car wash within the boundaries of the City; thus, this business will offer a service that is not currently offered. The proposed business location and proposed access location will contribute to functional

conglomerations of commercial activities by providing a full-service car wash within the regional commercial zone.

G. Code Criteria:

The requirements for the RC zone are outlined in Section 19.04.22. The parking requirements are in Chapter 19.09, the Site Plan requirements are in Chapter 19.14, and the Conditional Use standards are in Chapter 19.15. Pertinent sections of these Chapters and sections are reviewed below.

Permitted or Conditional Uses: complies. Section 19.04.22 lists all of the permitted and conditional uses allowed in the RC zone. "Car wash (full-service)" is a conditional use in the RC zone. Chapter 19.02 states: "Car wash (full service)" means a car wash with facilities for the washing or waxing of automobiles, light trucks and vans, which may include drying equipment, vacuums, and other incidental uses. Full service car washes shall not include open self-service bays." In conjunction with the site plan application, the applicant is seeking conditional use approval. A review of the conditional use standards is found later in this report.

Minimum Lot Sizes: complies. The minimum lot size in the RC zone is 20,000 square feet. The proposed project is 71,396 square feet. A lot line adjustment application is required to adjust the lot lines between Lots 2 and 3. It is recommended that this be processed prior to approval of the construction drawings. The remaining parcel will be over 20,000 square feet.

Setbacks and Yard Requirements: up for discussion. Section 19.04.22 outlines the setbacks required by the RC zone. The front of the building is facing West Commerce Drive. The setback requirements are reviewed below.

Front: can comply. Not less than twenty feet is required. *The plans indicate approximately 35 feet for the front building setback. However, the applicant is requesting a reduced landscape area in the front as outlined under "development standards" later in this report.*

Sides: can comply. Twenty feet is required when adjacent to RC zones. The proposed building is setback more than 20 feet from the future property lines. They will be able to comply once the property lines have been officially amended.

Rear: complies. The RC zone requires a 20 foot rear setback. The rear property line is the west property line. The building is setback approximately 25 feet from this property line.

Other General Requirements: complies. In addition to the specific setback requirements noted above, no building shall be closer than five feet from any private road, driveway, or parking space. The intent of this requirement is to provide for building foundation landscaping and to provide protection to the building. Exceptions may be made for any part of the building that may contain an approved drive-up window. *The applicant has added a five foot landscape buffer on the east and west sides of the building to comply with this requirement.*

The proposed building is in compliance with the required setbacks; however, an exception to the requirement for 20 feet of landscaping within the front setback is being requested and is reviewed under the "landscaping requirements" section of this report.

Structure Height: Reviewed with Site Plan application. No structure in this zone shall be taller than 50 feet. Building elevations are attached and the building complies with this requirement.

Maximum Lot Coverage: complies. The maximum lot coverage in this zone is fifty percent. The proposed site is 71,396 square feet. The proposed building is a total of is 10,696 square feet, which is 15% of the site.

Minimum Building Size: complies. Individual structures within this zone shall be a minimum of 1,000 square feet above grade. The proposed building is 10,696 square feet.

Development Standards: variation requested. Section 19.04.22(9)(b)(i) states "required front yard areas, and other yard areas facing a public street, shall have a landscaped area of not less than twenty feet (or as reduced in subsection 5.b. above) as approved through the Site Plan review process." Subsection 5.b. contains no criteria for reducing the 20 ft. landscaping requirement. However, the old criteria (prior to July 2013) in 5.b. stated that the Council may reduce setbacks (front and rear) to ten feet if "the reduction provides a more attractive and efficient use of the property." Therefore, staff has determined that this is the proper standard to use for reducing the front landscaping requirement. Following are possible reasons to grant or deny the reduction:

> For: The proposed drive-aisle cannot be located where it is shown and the site will have to be redesigned.
>
> Against: 20 feet of landscaping in front of the building adds aesthetic appeal to the site.
>
> **Proposed Finding:** a reduction from 20 feet to 10 feet of landscaping within the front setback area provides a more attractive and efficient use of the property by allowing the drive isles that serve the business to surround the building as necessary. The applicant is also proposing that 38.60% of the site be landscaped, which exceeds the required 25%.

Uses Within Buildings: City Council approval required. This section requires all uses to be conducted entirely within an enclosed building except for those deemed by the City Council to be customarily and appropriately conducted outside such as automobile refueling stations and gas pumps. The proposed business will include personnel who hand-dry vehicles and this will be conducted outside. The proposed business will also offer self-service vacuums, which are to be operated outside.

> **Proposed Finding:** The proposed outdoor uses such as drying and vacuuming vehicles are deemed to be customarily and appropriately conducted outside for a full-service car wash.

Trash storage: can comply. Section 19.14.04 requires trash storage areas to be comparable with the proposed building and surrounding structures. The applicant is aware of this requirement and this has been added as a condition of approval.

Buffering/Screening Requirements: complies. This section requires fencing or landscaping to buffer uses in the RC zone that abut Agricultural or residential uses. *There are not any abutting agricultural or residential uses.* This section also requires a minimum number of both deciduous and evergreen trees. *Landscape requirements are reviewed later in this report.*

Landscaping Requirements: complies. Twenty percent of the total project area is required to be landscaped and all sensitive lands shall be protected. *The plans indicate 38.60% of the site will be landscaped and there are not any sensitive lands within the project area.*

For 27,585 sq. ft. of landscaping requires: 11 deciduous trees at 2.5" caliper, 10 evergreen trees at 6', 35 shrubs and 50% turf.

The plans indicate 11 deciduous trees at 2.5" caliper, 10 evergreen trees at 6', 145 shrubs and 89% turf. The applicant is also proposing trellises on the west elevation with plants growing on them; this has been added as a condition of approval.

Sensitive Lands: complies. Sensitive lands shall not be included in the base acreage when calculating the number of ERUs permitted in any development. Sensitive lands shall be included in protected landscaping. *This site does not have any sensitive lands other than the detention basin needed to serve this property. The detention basin will be located within the landscape areas. The RC zone does not stipulate a permitted number of ERU's per acre.*

Parking: complies. Section 19.09.11 (as approved by the City Council on June 3, 2014) requires "3 stacking stalls per bay including stall inside bay, plus 1 parking stall per bay, plus 1 stall per person employed on highest employee shift" The applicant has indicated that they will have 12-13 employees on the highest shift and an estimated total of 20 employees. A standard employee schedule is attached. The proposed plans include 29 parking stalls (including the stalls for the vacuums) along with three stacking stalls for each bay; thus, the proposed plans comply with the parking requirement.

Landscaping in Parking Areas: complies. Section 19.09.08 requires a 10 foot berm between parking areas and the public street, a landscape island every 10 stalls, and landscape boundary strips of eight feet. *The landscape area between the parking area for self-vacuuming and the West Commerce Drive right of way is a minimum depth of 11.42 feet; landscape islands are proposed as required; and, the landscape boundary strip on the west side of the property is 8 feet wide, complying with the requirements for landscaping in parking areas.*

Parking Lot Lighting: can comply. Section 19.14.04(7) requires "All streetlights and interior parking lot lights shall meet the City's adopted design standards for lighting." The applicant is proposing a parking lot light that is similar to the City's adopted design standard. The proposed light has some similarities to the City standard in that there is a bell shade. The pole and base vary from the City standard. The Planning Commission and City Council may choose to discuss this further. Condition #8 recommends that the proposed bell shade be approved as proposed, but that the pole and base be updated to more closely match the City standard.

Signage Review: can comply, third wall sign requires City Council approval. The applicant is requesting three wall signs and a monument sign. The request is reviewed below.

Monument sign: complies. The proposed monument sign is 7'-6" tall, with a 2 foot base constructed of materials that match the building, with a sign face of 36 square feet.

Wall signs: can comply. Wall signs are being requested on the south, east and southeast elevations of the building. The sizes comply, but the third wall sign requires Council approval. Section 19.18.08 states that for wall signs, "The total number of wall signs shall not exceed two unless otherwise approved through the site plan process for new projects."

The proposed signs are each 29.5 square feet in size and comply with Section 19.18.08 which allows a maximum letter/log height of three feet and allows one square foot of signage per lineal foot of building frontage.

The building frontage for the east elevation is 46'-2" wide and the proposed sign is 29.5 square feet. The building frontage for the southeast elevation is 56'-4" wide and the proposed sign is 29.5 square feet. The building frontage for the south elevation is 30 feet wide and the proposed sign is 29.5 square feet.

For third and fourth wall signs, these signs must be located on elevations which face a public or private street or a non-residential parking lot. These signs are not allowed on elevations which

face undeveloped property, service alleys or driveways, or separate residential areas not included with a planned area. *All three signs are proposed to face the drive isles or parking areas within the site. The development across the street from the proposed signs is a commercial development.*

Conditional Use Review:

19.15.04. Determination.

1. The Planning Commission may only permit a Conditional Use to be located within zone where the particular Conditional Use is listed as a Conditional Use by the use regulations of this Title.
2. A conditional use shall be approved if reasonable conditions are proposed, or can be imposed, to mitigate the reasonably anticipated detrimental effects of the proposed use in accordance with the standards contained in this Chapter.
3. If the reasonably anticipated detrimental effects of a proposed conditional use cannot be substantially mitigated by the proposal or the imposition of reasonable conditions to achieve compliance with the standards contained in this Chapter, the conditional use may be denied.

Finding: complies. "Car Wash (full service)" is listed as a conditional use within the RC zone. The proposed car wash is located in a Commercial zone. Mitigation measures are reviewed under "General standards and Considerations Governing Conditional uses" below. The reasonably detrimental effects of the proposed conditional use are minimal and can be mitigated by meeting the site requirements for developments in the RC zone.

19.15.05. General Standards and Considerations Governing Conditional Uses.

In reviewing an application for a Conditional Use permit, the Planning Department shall apply the following considerations and standards:

1. The siting of the structure or use, and in particular:
    a. the adequacy of the site to accommodate the proposed use or building and all related activities;
    b. the location and possible screening of all outdoor activities;
    c. the relation of the proposed building or use to any adjoining building with particular attention to protection of views, light, air, and peace and quiet;
    d. the location and character of any display of goods and services; and
    e. the size, nature, and lighting of any signs.

    Staff finding: complies. The site is located in an RC zone where commercial uses are anticipated. Existing development consists of the IHC Clinic to the west which is separated from this particular building by a large detention basin, and Chase Bank and Dollar tree to the east which are separated from this site by a public road. The proposed location will allow full service car washing services in a Commercial area. The proposed outdoor activities are drying and vacuuming the cars. The proposed landscaping and required landscape berms will aid in screening these activities. The proposed building is facing West Commerce Drive, development that occurs to the north in the future will be separated from the subject use by a parking lot. The existing and future separations will aid in protecting surrounding businesses from the sounds generated by the car wash. Signs have been reviewed earlier in this report and comply with commercial signage requirements. **The request for a third wall sign requires City Council approval through the site plan process.**

2. Traffic circulation and parking, and in particular:
    a. the type of street serving the proposed use in relation to the amount of traffic expected to be generated;
    b. the adequacy, convenience, and safety of provisions for vehicular access and parking, including the location of driveway entrance and exits; and
    c. the amount, timing, and nature of traffic generated by the proposed conditional use.

Staff finding: complies. The City Engineer has reviewed the site and the circulation. The existing street that will serve the proposed use is a local street that was constructed in anticipation of serving commercial traffic in this area. During the Concept Plan review it was recommended that the site be shifted to the north to allow the main access to line up with the order window. This has taken place and this change eliminates the turning movement that would have been needed with the concept plan site design. The site includes the parking required by pending ordinance as reviewed earlier in this report. The stacking areas are in compliance with the pending ordinance requirements and contribute to the adequacy, convenience, and safety of vehicular movement through the site. The amount of traffic generated by the site varies throughout the day and throughout the seasons. The proposed site is laid out in a configuration that will accommodate the anticipated traffic.

3. The compatibility of the proposed conditional use with its environment, and in particular:
    a. the number of customers or users and the suitability of the resulting activity level to the surrounding uses;
    b. hours of operation;
    c. adequacy of provisions for the control of any off-site effects such as noise, dust, odors, light, or glare, etc.;
    d. adequacy of provisions for protection of the public against any special hazards arising from the intended use;
    e. the expected duration of the proposed building, whether temporary or permanent, and the setting of time limits when appropriate; and the degree to which the location of the particular use in the particular location can be considered a matter of public convenience and necessity.

Staff finding: complies. The proposed full-service car wash is a compatible use in the RC zone. The proposed car wash is being proposed on an undeveloped lot/site and the resulting activity level will be comparable if not less than that of the surrounding uses. There are three sites in Salt Lake County and the operating hours are Mon-Fri 8:00 a.m. to 6:00 p.m., Sat 8:00 a.m. to 5:30 p.m., Sun 10:00 a.m. to 3:00 p.m. (weather permitting). The anticipated hours are expected to be the same or similar. These hours are within the operating hours of the surrounding uses. Landscaping, berming, and building setbacks aid in control of off-site effects such as noise and outdoor activities such as drying and vacuuming. No special hazards will arise from the proposed use. The building is expected to be permanent and the hours of operation are reasonable for a commercial business in the RC zone.

4. The Conditional Use shall meet the following standards:
    a. the use will not, under the circumstances of the particular case, be detrimental to the health, safety, or general welfare of persons residing or working in the vicinity, or injurious to property or improvements in the vicinity;
    b. the use will be consistent with the intent of the land use ordinance and comply with the regulations and conditions specified in the land use ordinance for such use;
    c. the use will be consistent with the character and purposes stated for the land use zone involved and with the adopted Land Use Element of the General Plan;
    d. the use will not result in a situation which is cost ineffective, administratively infeasible, or unduly difficult to provide essential services by the City, including roads and access for emergency vehicles and residents, fire protection, police protection, schools and busing, water, sewer, storm drainage, and garbage removal; and
    e. the proposed use will conform to the intent of the City of Saratoga Springs General Plan.

Staff finding: complies. The proposed full service car wash will not be detrimental to the health, safety, or general welfare of persons in the area but will offer a service that is not yet available in the City. The proposed site can comply with the land use ordinance requirements

and regulations as reviewed earlier in this report. The proposed use will not result in a situation that is cost ineffective to the City. The proposed use will contribute to sales tax revenue for the City. The proposed use conforms to the intent of the General plan as outlined in Section R of this report.

5. When necessary, the City Council may attach conditions to ensure compatibility with the surrounding area and to mitigate harmful effects. Such conditions may include the following:
    a. additional parking;
    b. water, sewer, and garbage facilities;
    c. landscape screening to protect neighboring properties;
    d. requirements for the management and maintenance of the facilities;
    e. changes in layout or location of uses on the lot; and
    f. any other condition the City Council finds necessary to reasonably ensure that the proposed Conditional Use will comply with the standards noted above.

    Staff finding: additional mitigation is not necessary. The site plan indicates adequate parking for the proposed use, a dumpster location, landscaping and berming as required by code which will buffer the outdoor activities. The hours of operation are compatible with the surrounding businesses and will not need additional management or maintenance. The business faces West Commerce drive. Changes to the layout or location are not recommended.

6. The City Council shall make its decision based upon the facts presented for the record; expressions of support or protest alone shall not constitute the basis of approval or denial.

H. Recommendation and Alternatives:

After evaluating the required standards for developments in the RC zone and the conditional use criteria, staff recommends that the City Council conduct a public meeting, accept public comment at their discretion, and make the following motion:

Recommended Motion:

"Based upon the evidence and explanations received today, I move that the City Council approve the Platinum Car Wash Site Plan and Conditional Use Permit on property located at 1413 North West Commerce Drive, with the findings and conditions below:

Findings:

1. The proposed site plan and conditional use are consistent with the General Plan as explained in the findings in Section "F" of this report, which findings are incorporated herein by this reference.
2. The proposed site plan and conditional use meets or can conditionally meet all the requirements in the Land Development Code as explained in the findings in Section "G" of this report, which findings are incorporated herein by this reference.
3. The proposed wall signs face the drive isles or parking areas within the site. The development across the street from the proposed signs is a commercial development.

Conditions:

1. That all requirements of the City Engineer be met, including those listed in the attached staff report.
2. That all requirements of the Fire Chief be met.
3. A lot line adjustment application is required to be submitted, reviewed, approved and recorded prior to approval of the construction drawings.
4. The third wall sign is approved as proposed.
5. Dumpster enclosure details shall comply with Section 19.14.04.
6. The west elevation shall include trellises with plants growing on them to provide aesthetic relief to this elevation.

7. The proposed photometric plan and lighting coverage are subject to approval by the City Engineer.
8. For parking lot lighting, the proposed bell shade shall be approved as proposed. The proposed pole and base shall be updated to more closely match the City standard. The lights shall be black in color.
9. Any other conditions as articulated by the City Council:
   _____

Alternative Motions:

Alternative Motion A
"I move to **continue** the item to another meeting, with direction to the applicant and Staff on information and/or changes needed to render a decision, as follows:

_____
_____
_____
_____

Alternative Motion B
"Based upon the evidence and explanations received today and the following findings, I move that the City Council deny the Platinum Car Wash site plan and conditional use on property located at 1413 North West Commerce Drive. Specifically I find that the following standards and/or code requirements have not been met:"

List Specific Code Standards and Requirements:

_____
_____
_____
_____

I. Exhibits:

1. Engineering Report
2. Zoning / Location map
3. 3/13/14 Planning Commission Minutes
4. Weekly Staff Schedule at Cottonwood Heights
5. Proposed Elevations
6. Site Plan
7. Landscape Plans
8. Proposed Signage
9. Proposed Lighting Plan

City Council
Staff Report

Author: Jeremy D. Lapin, City Engineer
Subject: Platinum Car Wash
Date: June 12, 2014
Type of Item: Site Plan Approval

CITY OF
SARATOGA SPRINGS

Description:

A. Topic: The Applicant has submitted a Site Plan application. Staff has reviewed the submittal and provides the following recommendations.

B. Background:

Applicant:	*Gary Hadfield / Platinum Car Wash, LLC*
Request:	*Site Plan Approval*
Location:	*1413 North Commerce Drive*
Acreage:	*1.64 acres*

C. Recommendation: Staff recommends the approval of Site Plan subject to the following conditions:

D. Conditions:

A. Meet all engineering conditions and requirements in the construction of the project. Review and inspection fees must be paid and a bond posted as per the City's Development Code prior to any construction being performed on the project. Impact and water fees are due when pulling the building permit.

B. All review comments and redlines provided by the City Engineer are to be complied with and implemented with the approved construction drawings.

C. Developer must secure water rights as required by the City Engineer, City Attorney, and development code.

D. Submit easements for all public utilities not located in the public right-of-way.

E. Developer is required to ensure that there are no adverse effects to adjacent properties due to the grading practices employed during construction of these plats.

F. Project must meet the City Ordinance for Storm Water release (0.2 cfs/acre for all developed property) and all UPDES and NPDES project construction requirements.

G. Final plans shall include an Erosion Control Plan that complies with all City, UPDES and NPDES storm water pollution prevention requirements.

H. All work to conform to the City of Saratoga Springs Standard Technical Specifications, most recent edition.

I. Developer may be required by the Saratoga Springs Fire Chief to perform fire flow tests prior to final plat approval and prior to the commencement of the warranty period.

J. Submittal of a Mylar and electronic version of the as-built drawings in AutoCAD format to the City Engineer is required prior acceptance of site improvements and the commencement of the warranty period.

K. Developer shall complete a Lot line adjustment to ensure the new lot matches the approved site plan limits prior to scheduling a preconstruction meeting, beginning construction or receiving a building permit.

L. Developer shall be required to implement a water recycling system to ensure gallons per vehicle do not exceed what is approved and paid for with the impact fees and water fees rights. Developer shall ensure that the site plumbing is built without the ability to bypass the reclamation system.

M. Lighting fixtures and lighting intensities shall meet the lighting requirements found in the Land Development Code and Engineering Standards and Specifications, most recent editions. Fixtures shall be City standard unless otherwise approved by the City Council. All parking stalls shall have a minimum illumination of 0.5 ft-candles and spillover at the property line shall not exceed 1.0 ft-candles.

N. A cross access easement shall be provided for the adjacent lot to the north.

O. Hydrant spacing shall meet minimum spacing requirements of 300’.

Location Map

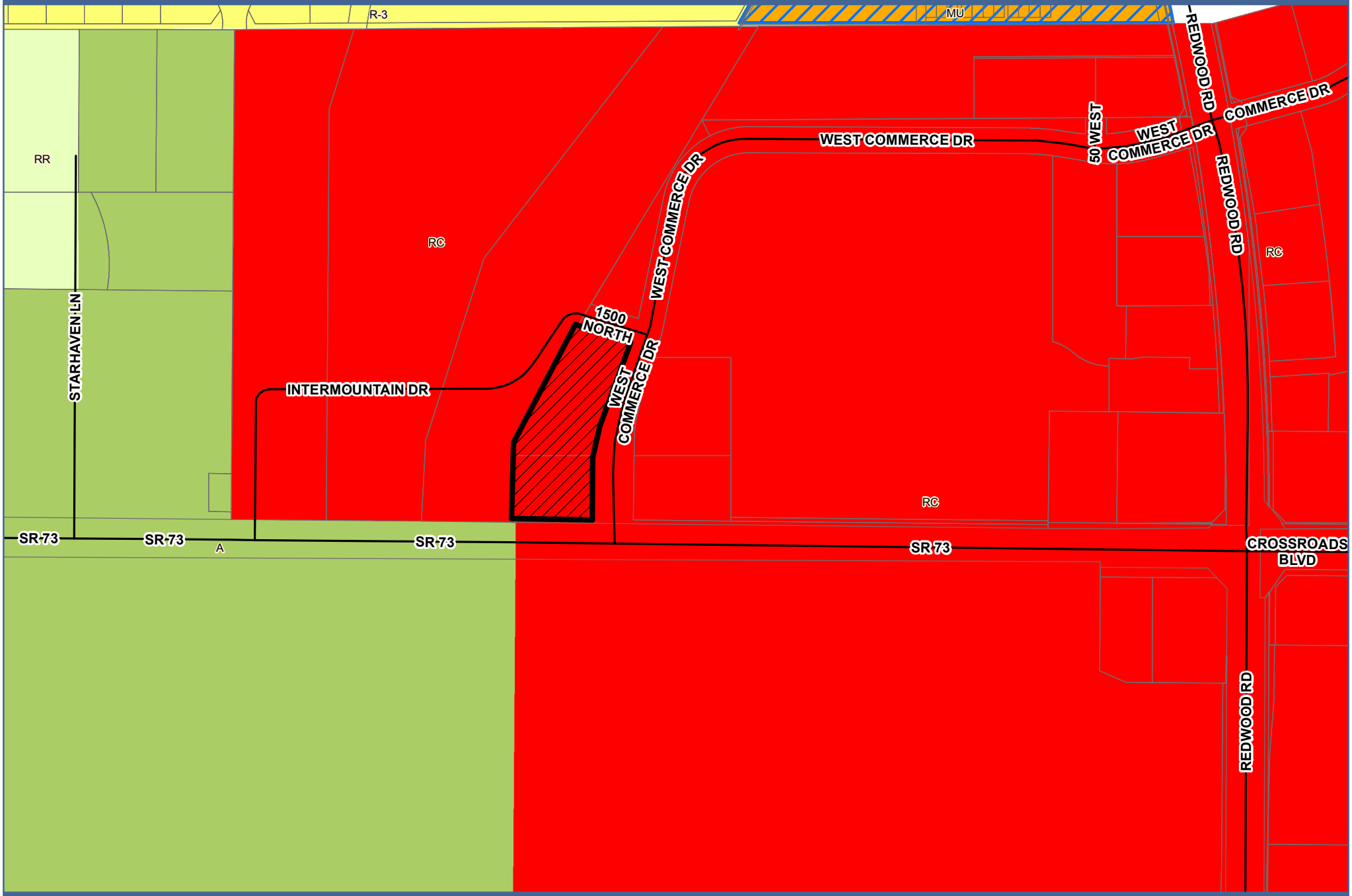

Platinum Car Wash

Planning Commission Meeting

Thursday, March 13, 2014
Meeting held at the Saratoga Springs City Offices
1307 North Commerce Drive, Suite 200, Saratoga Springs

DRAFT MINUTES

Work Session 6:32 P.M.

Present:
Commission Members: Jeff Cochran, Sandra Steele, Kara North, Jarred Henline, Kirk Wilkins, Eric Reese, Hayden Williamson
Absent Members:
Staff: Lori Yates, Chantelle Rosson, Kimber Gabryszak, Sarah Carroll, Kevin Thurman, Jeremy Lapin, Scott Langford
Others: Gary Hadfield, Brett Gardner, Susan Hadfield, Vance Twitchell, Cari Krejci, Bob Krejci, Stan Nau, Jimme Smeath, Stellin Jacobs, Jeremy Weller, Marilyn Sanford, Lee Jones, Richard Sanford, Susan Palmer, Ronald Johnston, Camilla Simonsen, Adam Naxler, Chris Carn, Troy Jenkins, Dalton Klinger, Debra Jenkins, Bruce Baird, Aaron Nielsen, Kolton Nielsen, James Jones, Halceyn Klinger

5. Concept Plan for Platinum Car Wash located at approximately 1413 North West Commerce Drive, Gary Hadfield, applicant.

Sarah Carroll presented the Concept Plan for Platinum Car Wash which included building elevations along with condition recommendations. She touched on the landscaping plan which the applicant is requesting a reduction to the width of the requirement.

Gary Hadfield, applicant indicated that cars are moving through the carwash every 30 seconds. The lot is small but we have accommodated the carwash to the size of the lot. Gary feels that the amount of parking stalls required by the code don't fit the purpose or need of the business.

Jarred Henline asked what zoning is north of this property.
Sarah Carroll stated that it's the same zoning of this property which is regional commercial.
Jarred Henline would recommend the plan be flipped which would reduce the concerns of egress and ingress. He feels that a berm is necessary. The required 55 parking stalls are unnecessary for this type of business.

Kara North asked staff if there is an island to the north on the plan.
Sarah Carroll indicated that there is one.
Kara North asked what the purpose of the island is.
Gary Hadfield indicted that the island will be shifted to the north allowing car stacking. He then briefly touched on the proposed plan
Kara North asked that there is plenty of space is allotted for stacking.
Gary Hadfield stated that a revised concept plan will show those changes.
Kara North has no problem with the proposed parking and is fine with the request setback.

Kirk Wilkins the required parking for this type of business doesn't make sense. Do we have the ability to change this Code requirement?
Sarah Carroll in order to change those requirements, revisions to the Code would need to be made.

Kirk Wilkin would support maintaining the setback on the south end of the property and decreasing the setback on the east side. The ingress and egress look larger then appears and is fine with what is being proposed.

Eric Reese has no issues with the proposed parking. He is fine with the requested setback reduction. He would like to see the building be an attractive one.

Hayden Williamson suggested allowing for 20 parking stalls. Due to the shape of the lot and size the requested setback would be more effective. He asked if it would be possible to widen the east driveway.
Gary Hadfield stated that there would be two lanes and landscaping could be expanded to 12 feet.

Sandra Steele asked how many employees would the carwash staff.
Gary Hadfield there would be approximately 20 employees per day.
Sandra Steele the current parking standards work for this particular plan and feels that more stalls might be needed. When cars are being detailed additional stalls will be used, this may cause parking to occur on Commerce Drive which causes some concern. The landscaping should remain at 20 feet and there should be a landscape buffer along the building which isn't shown on the current concept plan. Landscaping along Commerce Drive will also be necessary. Sandra isn't pleased with the proposed plan and feels that there is plenty of work that needs to be done with this project.

Jeff Cochran the parking isn't a concern; there is no need for 55 parking stalls for this type of business. This business is a great addition to the city but feels this lot might be rather tight and encouraged the developer to comply with all Code standards.

□ □□□□□ **S□□□d□□**

C□□□□□□ □□d

□ □□□ □□**S□□d□□** □□□□□□□

	S□□d□□	**M□□d□□**	**T□□□d□□**	□ **□d□□□d□□**	**T□□r□d□□**	□r□d□□	**S□□□rd□□**
CASHIER							
Susan					8-6	8-6	8-6
Jill	10-3	8-6	8-6	8-6			
MGR							
Brett	10-3	10-6		8-6	8-3		8-6
Jimmie		8-3	8-6		10-6	8-6	8-6
ATTENDANTS							
Abrea	10-3	9-6	11-6	11-6			
Ben		3-6	3-6	3-6			
Crystal	10-3	9-6	9-6	9-6			
Dan	10-3	8-3	8-3				8-1
Heather	10-3				4-8	8-3	10-6
Heidi		8-4	8-3	8-3	8-3		
James		9-6			9-6	9-6	9-6
Jason				12-6	12-6	12-6	9-6
Jenn B.	10-3		12-6	3-8			1-6
Kaylie				4-8	4-8	3-8	9-2
Kimberly		8-4	8-3	8-3	8-3		
Kristal						8-4	8-1
Kristi	10-3		11-6	3-8			
Kyle	10-3	12-6				3-6	8-4
Mindy		8-4		8-3	8-3	8-3	
Montana		3-6	3-6		11-6	1-6	8-4
Nicole				8-3	8-3	8-3	10-6
Rachele					3-6	11-6	9-2
Robbie						8-4	8-4
Samantha	10-3	3-6	3-6			10-6	
Tamina	10-3	3-6	3-6	3-6			2-6
Tina				12-6	3-6	11-6	
Todd		3-6	3-6	3-6			8-1
Zach					3-6	3-6	1-6

	S□□d□□	**M□□d□□**	**T□□□d□□**	□ **□d□□□d□□**	**T□□r□d□□**	□r□d□□	**S□□□rd□□**
S□□□□□	11	6	5	6	6	7	9
S□□□□□		10	9	10	9	9	9
T□□□□	□□	□□	□□	□□	□□	□□	□□

PLATINUM CAR WASH

LOCATED IN THE NORTHEAST QUARTER OF SECTION 14,
TOWNSHIP 5 SOUTH, RANGE 1 WEST,
SALT LAKE BASE AND MERIDIAN

LOT 3 OF SARATOGA WALMART SUBDIVISON

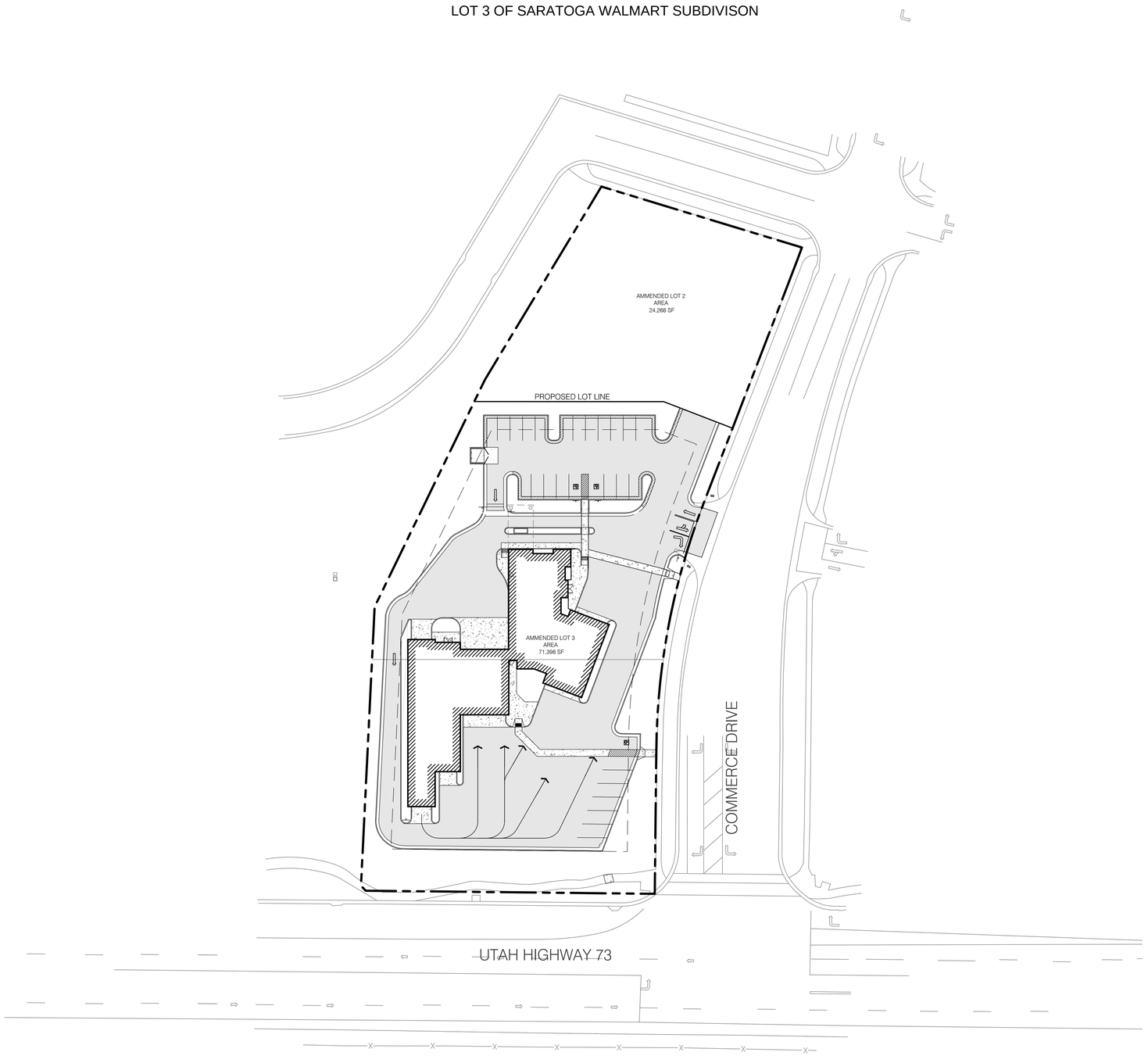

GRAPHIC SCALE

40 0 20 40 80

(IN FEET)
1 inch = 40ft.

NORTH

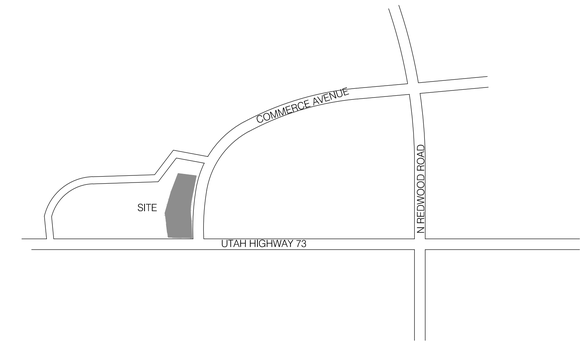

VICINITY MAP
N.T.S

OWNER/DEVELOPER: GARY HADFIELD
PLATINUM CARWASH
ADDRESS: 387 E 12300 S
DRAPER, UTAH 84020
TELEPHONE: (801) 503-0414

DRAWING INDEX

~~COVER~~	~~COVER~~ SHEET
CGN.01	GENERAL NOTES, LEGEND & ABBREVIATION
CSP.01	SITE PLAN
CUP.01	UTILITY PLAN
CGD.01	GRADING & DRAINAGE PLAN
CPP.01	SEWER LINE PLAN AND PROFILE
CPP.02	STORM LINE PLAN AND PROFILE
CEP.01	STORM WATER POLLUTION PREVENTION
CEP.02	SWPP NOTES
CEP.03	POST CONSTRUCTION
CEP.04	BMP DETAILS & NOTES
CDT.01	DETAILS & NOTES
CDT.02	DETAILS & NOTES
CDT.03	DETAILS & NOTES
CDT.04	DETAILS & NOTES
A1	FLOOR PLAN
A2.1	EXTERIOR ELEVATIONS
A2.2	EXTERIOR ELEVATIONS
L1.1	LANDSCAPE PLAN
L2.1	IRRIGATION PLAN
ES1	LIGHTING PLAN

CIVIL CONSTRUCTION PLANS

BENCHMARK CIVIL
BENCHMARK
ENGINEERING &
LAND SURVEYING
9130 SOUTH STATE STREET SUITE # 100
SANDY, UTAH 84070 (801) 542-7192
www.benchmarkcivil.com

PLATINUM CAR WASH
UTAH HIGHWAY 73 COMMERCIAL DRIVE
SARATOGA SPRINGS, UTAH

DRAFT: FBA/RPD	DESIGN: DKB	CHECK: DKB
DATE: 02/06/14	DATE: 02/06/14	DATE: 02/06/14

PROJECT NO. 1401006

No.	DATE	DESCRIPTION
1	05/07/14	REVISED SITE PER COMMENTS FROM SARATOGA SPRINGS
2	05/12/14	ADDED 10' BERM AND REVISED CURB NORTH OF CARWASH
3	05/22/14	REVISED PER SARATOGA SPRINGS CITY REDLINES

COVER

BENCHMARK ENGINEERING CONTACT: DALE K. BENNETT, PLS, PE

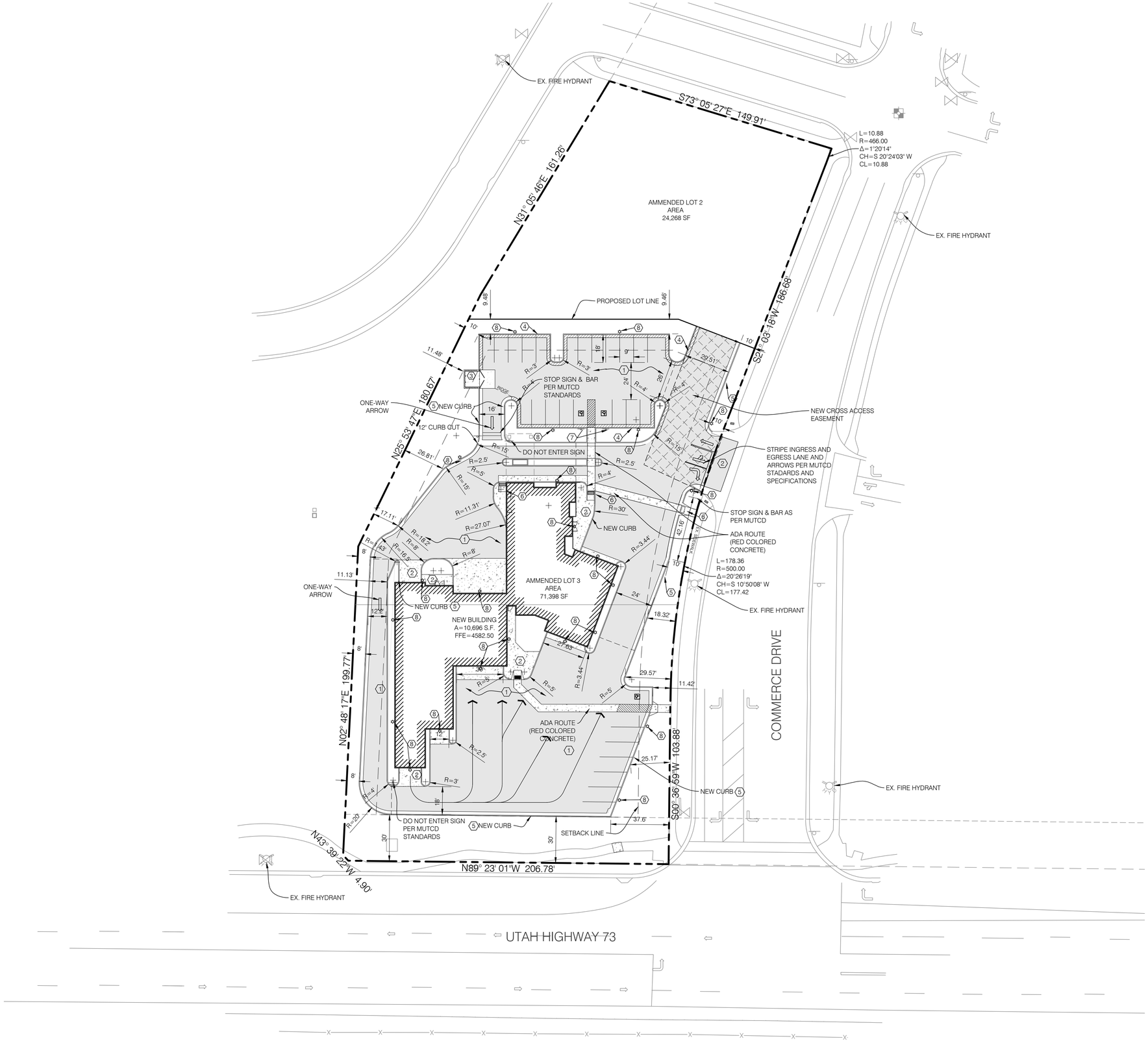

NORTH

GRAPHIC SCALE

30 0 15 30 60

(IN FEET)
1 inch = 30ft.

CONSTRUCTION KEY NOTES REFERENCE		
NO.	DESCRIPTION	DETAIL
1	STANDARD DUTY ASPHALT PAVEMENT WITH GRANULAR BASE.	1/CDT.01
2	CONCRETE PAVEMENT WITH GRANULAR BASE	1/CDT.01
3	DUMPSTER	
4	FALLOUT CURB & GUTTER	6/CDT.01
5	2.5' COMMERCIAL HIGHBACK CURB & GUTTER	6/CDT.01
6	ADA RAMP	1/CDT.02
7	ADA PARKING SIGN	1/CDT.02
8	LIGHT (SEE SHEET ES1 SITE LIGHTING PLAN FOR DETAILS)	

AREA TABLE		
PARTICULARS	S.F.	%
BUILDING	10,696	15.0
HARDSCAPE	33,115	46.4
LANDSCAPE	27,585	38.6
TOTAL	71,396	100

BOUNDARY DESCRIPTION:

LOTS 2 AND 3, SARATOGA WAL-MART SUBDIVISION, ACCORDING TO THE OFFICIAL PLAT THEREOF RECORDED IN THE OFFICE OF THE UTAH COUNTY RECORDER.

CALL BEFORE YOU DIG.
IT'S FREE & IT'S THE LAW.
BLUE STAKES OF UTAH
UTILITY NOTIFICATION CENTER
1-800-662-4111
www.bluestakes.org
811

No.	DATE	DESCRIPTION
1	03/07/14	REVISED SITE PER SARATOGA SPRINGS COMMENTS
2	05/12/14	ADDED BERM AND REVISED CURB NORTH OF CARWASH
3	05/22/14	REVISED PER SARATOGA SPRINGS CITY REDLINES

DRAWN BY FBA/RPD
CHECKED BY DKB
FIELD CREW SUREY
DATE 02/06/14
DWG. FILE 1401006site

SCALE MEASURES 1 INCH ON FULL SIZE SHEETS
ADJUST ACCORDINGLY FOR REDUCED SIZE SHEETS
0 0.5 1

PROFESSIONAL ENGINEER
No. 103381
DALE K. BENNETT
5-22-14
STATE OF UTAH

BENCHMARK ENGINEERING & LAND SURVEYING
9130 SOUTH STATE STREET SUITE # 100
SANDY, UTAH 84070 (801) 542-7192
www.benchmarkcivil.com
BENCHMARK CIVIL

PLATINUM CAR WASH
UTAH HIGHWAY 73 COMMERCIAL DRIVE
SARATOGA SPRINGS , UTAH

PROJECT NO. 1401006

SITE PLAN

CSP.01
3 OF 21

STORM DRAINAGE CALCULATIONS
Rational Method (Q=CIA)

Area Identification (A)	Rational Coefficient (C)		C*A
Roof =	10,696	0.9	9626.4 S.F.
Pavement =	29,304	0.9	26374 S.F.
Landscaping =	26,965	0.2	5393 S.F.
Sum:	66965 S.F.	Sum:	41393 S.F.

SARATOGA SPRINGS DESIGN STORM (100 YEAR EVENT) — **Allowable Discharge** = 0.115 cfs/acre

Time (min)	Intensity (in/hr)	Rainfall (Inches)	Rainfall Excess (cu.ft.)	Allowed (cu.ft)	Volume to Detain (cu.ft)
15	3.82	0.96	3294	159	3135
30	2.57	1.29	4433	318	4114
60	1.59	1.59	5485	636	**4848**
120	0.86	1.72	5919	1273	4646
180	0.57	1.72	5930	1909	4020
360	0.30	1.82	6292	3819	2473
720	0.17	2.02	6954	7637	0
1440	0.09	2.09	7202	15275	0

Revised allowable discharge: 0.115 cfs/acre

C. Existing Storm water detention:

Detention Area# 1
Area 1 (A1)= 1764 s.f. Basin Depth (H): **3.00 ft**
Area 2 (A2)= 246 s.f.
Frustum of Pyramid: V=h/3[A1+A2+ (A1*A2) ^1/2] **2669 cf**

Detention Area# 2
Area 1 (A)= 2491 s.f. Basin Depth (H): **0.50 ft**
Volume of a Pyramid: V=AH/3 = **415 cf**

Detention Area# 3
Area 1 (A)= 2293 s.f. Basin Depth (H): **1.00 ft**
Volume of a Pyramid: V=AH/3 = **764 cf**

Volume in Pipes and Boxes
Pipe Diameter (d)= 18 inches Pipe Length (l) = **547 ft**
Volume of a Pipe: V= (pi)d^2*l= **967 cf**
Volume in Boxes= **86 cf**

Total Detention Volume : 4,901 cf
Is there enough existing storm water storage? 4,848 cf **YES**

D. Orifice Design:
The storm runoff will be detained at 0.2 cfs/acre

$$Q = C_d A_o \sqrt{2gh}$$

Total acreage of development:	1.54 acres
Allowable discharge:	0.1 cfs/acre
Max head:	4.30 ft
Design diameter for new orifice:	**1.7 inch**

GRADING AND DRAINAGE KEY NOTES REFERENCE

NO	DESCRIPTION	DETAIL
1	GRADE SITE TO ELEVATIONS SHOWN ON PLAN.	
2	18" DIAMETER HDPE ADS N-12 STORM DRAIN LINE	
3	STORM DRAIN INLET PER SARATOGA SPRINGS STANDARD DETAIL SD-2	5/CDT.01
4	3x3 CATCH BASIN	2/CDT.02
5	1.7"Ø ORIFICE PLATE	3/CDT.01
6	15" DIAMETER RCP CLASS III STORM DRAIN LINE	
7	INLET TRASH GRATE PER SARATOGA SPRINGS STANDARD DETAIL SD-5	2/CDT.03
8	CONTECH CDS MODEL 2015-C	3/CDT.03
9	FLARED END SECTION	1/CDT.03

TOCP= TOP OF CONCRETE PAVEMENT

SURVEY CONTROL NOTE:
THE CONTRACTOR OR SURVEYOR PERFORMING THE CONSTRUCTION SURVEYING SHALL BE RESPONSIBLE TO PROVIDE CONSTRUCTION LAYOUT PER THE APPROVED PLANS ONLY. THE SURVEYOR SHALL ALSO BE RESPONSIBLE FOR VERIFYING HORIZONTAL CONTROL FROM THE SURVEY MONUMENTS AND FOR VERIFYING ANY ADDITIONAL CONTROL POINTS SHOWN ON THE SURVEY OR IMPROVEMENTS PLANS OR ON ELECTRONIC DATA PROVIDED BY BENCHMARK ENGINEERING AND LAND SURVEYING. THE SURVEYOR SHALL ALSO USE THE BENCHMARKS AS SHOWN ON THE PLAN, AND VERIFY THEM AGAINST NO LESS THAN THREE EXISTING HARD IMPROVEMENT ELEVATIONS INCLUDED ON THESE PLANS OR ON ELECTRONIC DATA PROVIDED BY BENCHMARK ENGINEERING AND LAND SURVEYING. IF ANY DISCREPANCIES ARE ENCOUNTERED, THE SURVEYOR SHALL IMMEDIATELY NOTIFY THE ENGINEER AND RESOLVE THE DISCREPANCIES BEFORE PROCEEDING WITH ANY CONSTRUCTION SURVEYING. IT IS ALSO THE RESPONSIBILITY OF THE SURVEYOR TO VERIFY ANY ELECTRONIC DATA WITH THE APPROVED STAMPED AND SIGNED PLANS AND NOTIFY THE ENGINEER WITH ANY DISCREPANCIES.

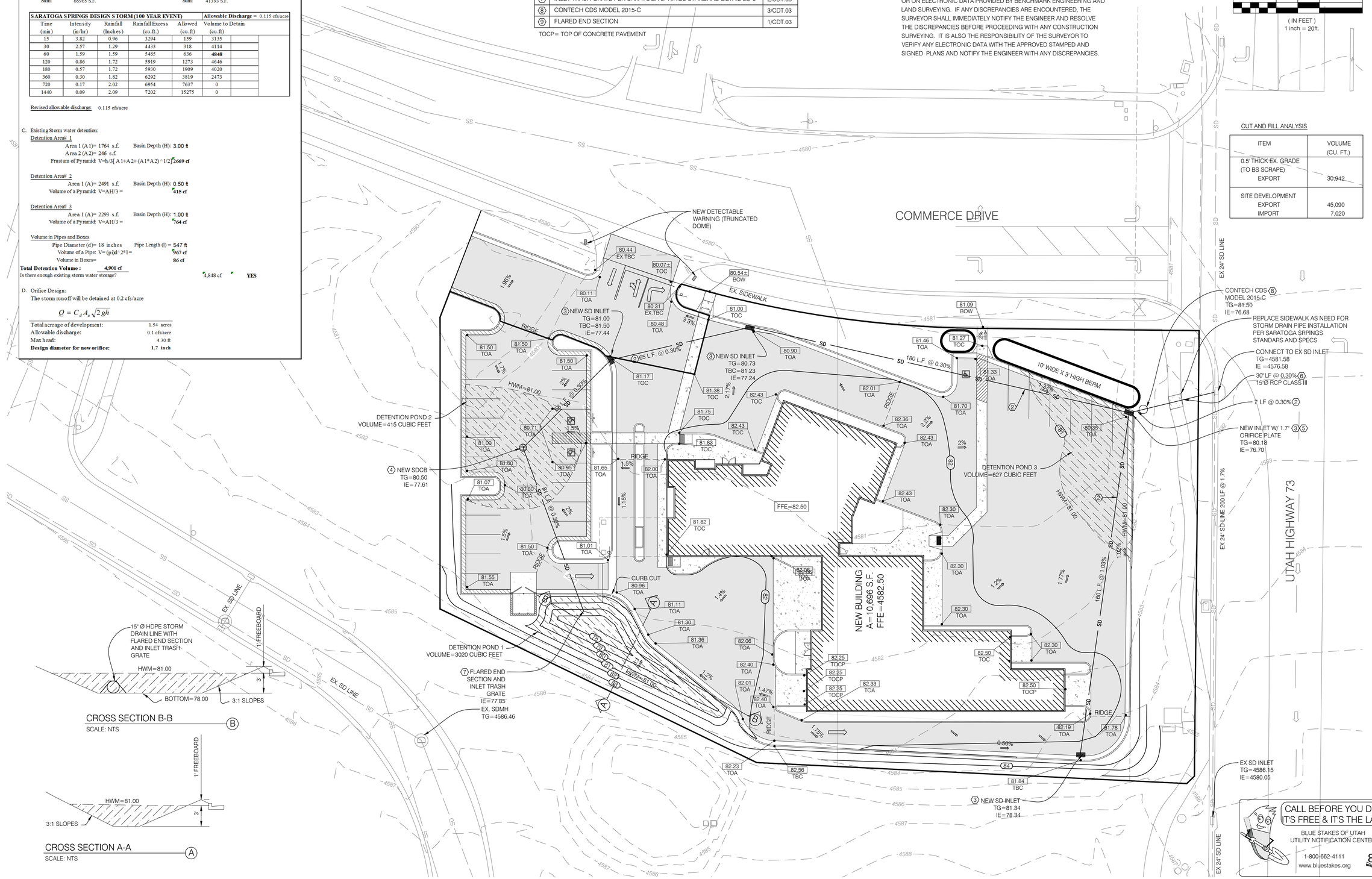

CUT AND FILL ANALYSIS

ITEM	VOLUME (CU. FT.)
0.5' THICK EX. GRADE (TO BS SCRAPE) EXPORT	30,942
SITE DEVELOPMENT EXPORT	45,090
IMPORT	7,020

No.	DATE	DESCRIPTION
1	05/07/14	REVISED SITE PER SARATOGA SPRINGS COMMENTS
2	05/12/14	ADDED BERM AND REVISED CURB NORTH OF CARWASH
3	05/22/14	REVISED PER SARATOGA SPRINGS CITY REDLINES

DRAWN BY FBA/RPD
CHECKED BY DKB
FIELD CREW SURVEY
DATE 02/06/14
DWG FILE 1401006site

SCALE MEASURES 1 INCH ON FULL SIZE SHEETS
ADJUST ACCORDINGLY FOR REDUCED SIZE SHEETS
0 0.5 1

PROFESSIONAL ENGINEER
No. 103381
DALE K. BENNETT
5-22-14
STATE OF UTAH

BENCHMARK ENGINEERING & LAND SURVEYING
9130 SOUTH STATE STREET SUITE # 100
SANDY, UTAH 84070 (801) 542-7192
www.benchmarkcivil.com

PLATINUM CAR WASH
UTAH HIGHWAY 73 COMMERCIAL DRIVE
SARATOGA SPRINGS , UTAH

CALL BEFORE YOU DIG. IT'S FREE & IT'S THE LAW.
BLUE STAKES OF UTAH UTILITY NOTIFICATION CENTER
1-800-662-4111
www.bluestakes.org
811

PROJECT NO. 1401006

GRADING & DRAINAGE PLAN

CGD.01

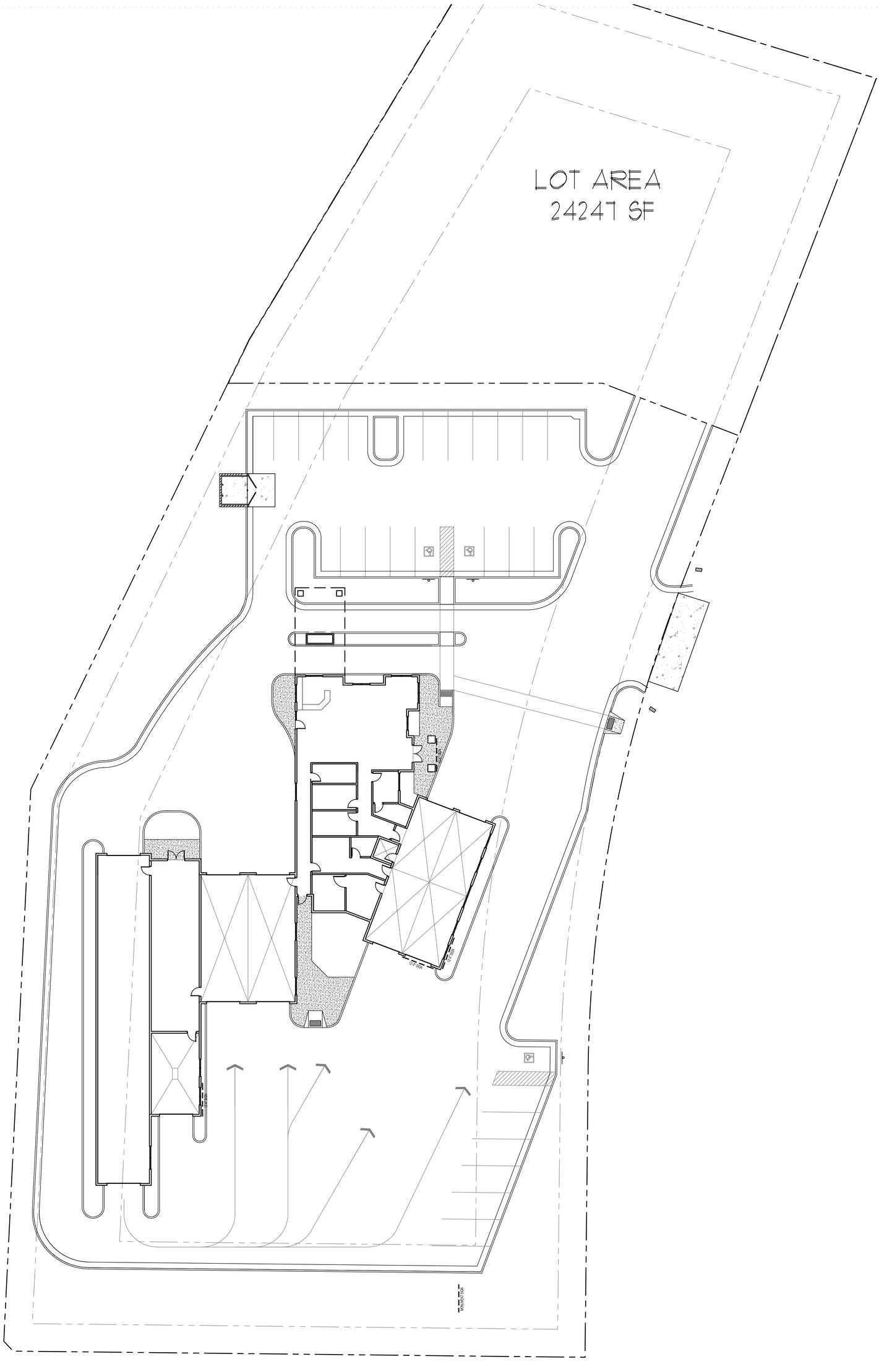

1 / A1 **FLOOR PLAN**

0 2 4 8 16'
SCALE: 1/8" = 1'-0"

NORTH

SHEET NUMBER	DATE		ARCHITECT	PROJECT/OWNER	SHEET TITLE	REVISIONS	PROJECT NUMBER
A1	FEBRUARY 11, 2014	NICHOLS • NAYLOR ARCHITECTS 1155 EAST WILMINGTON AVENUE SUITE 250 SALT LAKE CITY, UTAH 84106 (801) 487-3330		**PLATINUM CAR WASH** HIGHWAY 73 AND COMMERCE DRIVE SARATOGA SPRINGS, UTAH	FLOOR PLAN		14-07

Landscape Architect

rdl Design Company, Inc.
1020 East Yale Avenue
Salt Lake City, Utah 84105

Phone : 801-647-3114
Fax : 801-355-4544

Email : rdldesign@comcast.net

CALL BEFORE YOU DIG! BLUE STAKES 1 800 662 4111

Scale : 1" = 20'

20 0 20 40

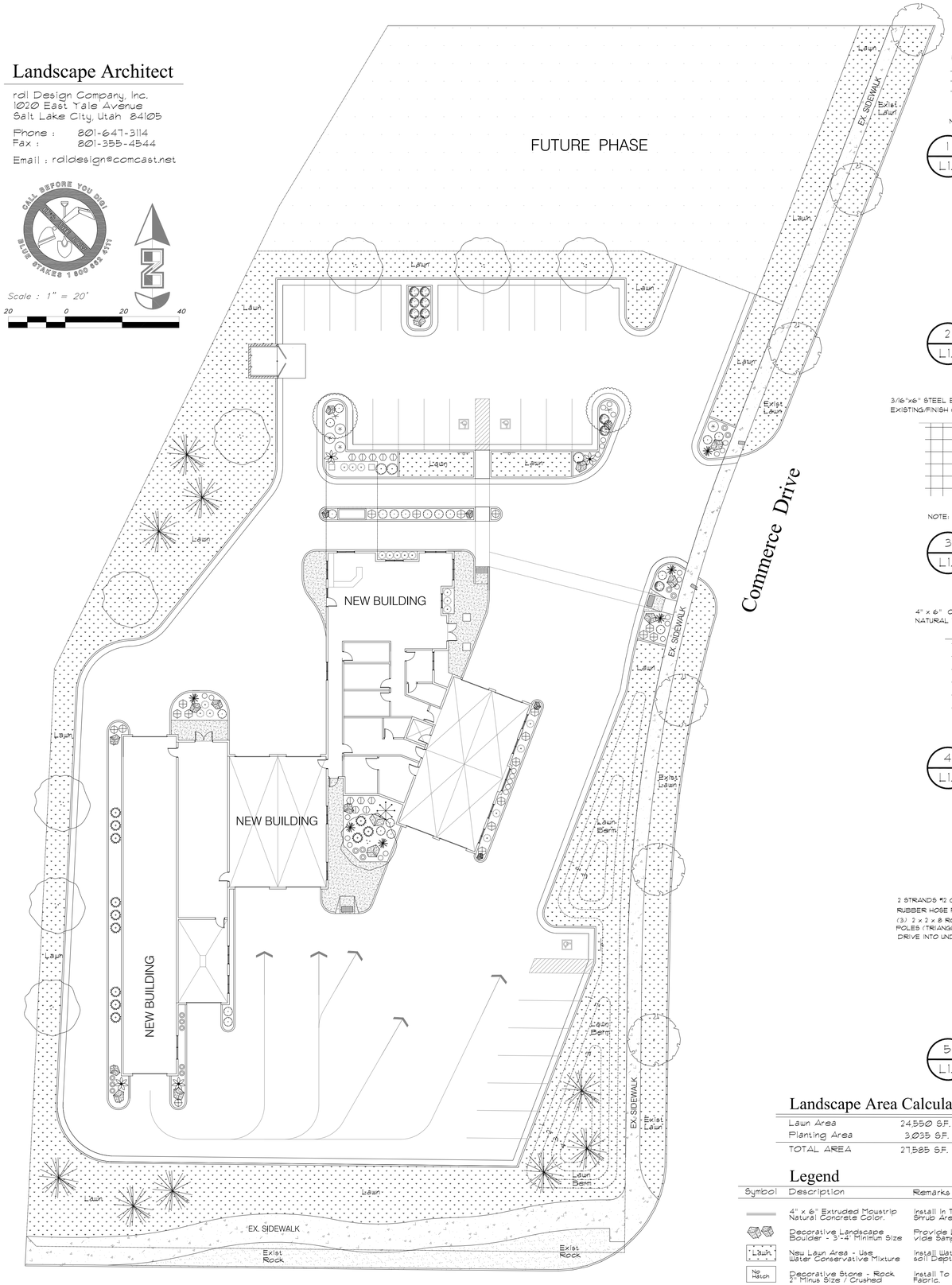

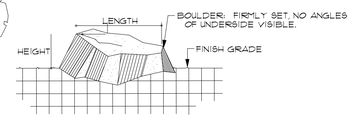

NOTE: USE CARE TO MINIMIZE MARRING & SCRATCHING.

1 / L1.1 **Decorative Boulder**

N. T. S.

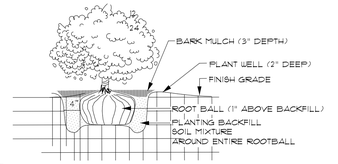

2 / L1.1 **Shrub Planting**

N. T. S.

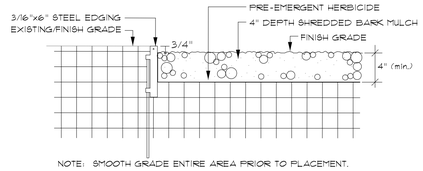

NOTE: SMOOTH GRADE ENTIRE AREA PRIOR TO PLACEMENT.

3 / L1.1 **Steel Edging / Bark Mulch**

N. T. S.

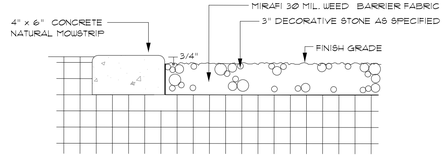

NOTE: SMOOTH GRADE ENTIRE AREA PRIOR TO PLACEMENT.

4 / L1.1 **Concrete Mowstrip**

N. T. S.

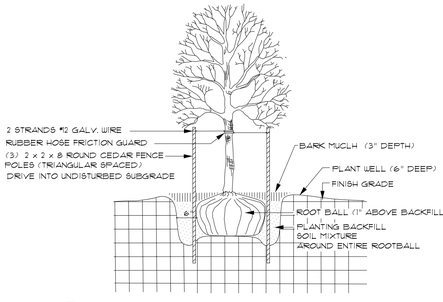

5 / L1.1 **Tree Planting**

N. T. S.

Landscape Area Calculations

Lawn Area	24,550 S.F.	89 %
Planting Area	3,035 S.F.	11 %
TOTAL AREA	27,585 S.F.	100 %

Legend

Symbol	Description	Remarks
	4" x 6" Extruded Mowstrip Natural Concrete Color.	Install In True Lines, Flush To All Concrete Edges & Between All Lawn And Shrub Areas.
	Decorative Landscape Boulder - 3'-4' Minimum Size	Provide Landscape Boulder Of Similar Color As Decorative Rock / Provide Sample For Approval.
Lawn	New Lawn Area - Use Water Conservative Mixture	Install Water Conservative/Drought Tolerant Mixture Over Specified Topsoil Depth.
No Hatch	Decorative Stone - Rock 2" Minus Size / Crushed	Install To A Depth Of Four (4) Inches Over "DeWitt" Brand Weed Barrier Fabric.

Plant List (TREES)

Quan.	Symbol	Botanical Name	Common Name	Size	Remarks
9		Gleditsia triacanthos 'Skyline'	Skyline Honeylocust	2 1/2" Caliper Ø'-12' Height	Matched Heads Straight Trunks
1		Picea abies 'Cupressina'	Columnar Norway Spruce	6' Min. Height B & B	Full Width Form Specimen
9		Picea pungens	Colorado Spruce	6' Min. Height B & B	Full Width Form Specimen
2		Pyrus calleryana 'Chanticleer'	Chanticleer Flowering Pear	2 1/2" Caliper Ø'-12' Height	Matched Heads Straight Trunks
NA		Existing Trees To Remain	Several Varieties	As Installed Ø'-12' Height	Protect During Construction

Plant List (SHRUBS)

Quan.	Symbol	Botanical Name	Common Name	Size	Remarks
18		Buxus microphylla 'Julia Jane'	Julia Jane Boxwood	5 Gallon	15"-18" Height
4		Cornus alba 'Ivory Halo'	Ivory Halo Dogwood	5 Gallon	18"-24" Height
9		Euonymus alatus 'Compacta'	Dwarf Burning Bush	5 Gallon	18"-24" Height
4		Physocarpus o. 'Summer Wine'	Summer Wine Ninebark	5 Gallon	18"-24" Height
12		Rhus aromatic 'Low Grow'	Grow Low Sumac	5 Gallon	18"-24" Spread
3		Rhus trilobata	Oakbrush Sumac	5 Gallon	18"-24" Height
19		Spiraea japonica 'Neon Flash'	Neon Flash Spiraea	5 Gallon	15"-18" Height
6		Yucca filamentosa 'Gold Sword'	Golden Sword Yucca	5 Gallon	15"-18" Height

Plant List (ORNAMENTAL GRASSES/PERENNIALS)

Quan.	Symbol	Botanical Name	Common Name	Size	Remarks
10		Calamagrostis a. 'Foerster'	Foerster Feather Grass	5 Gallon	24"-30" Height
15		Calamagrostis a. 'Foerster'	Foerster Feather Grass	5 Gallon	24"-30" Height
4		Helictotrichon sempervirens	Blue Oat Grass	2 Gallon	15"-18" Height
27		Lavandula 'Hidcote Blue'	Hidcote Blue Lavender	1 Gallon	12"-15" Height
15		Pennisetum a. 'Hamsin'	Dwarf Fountain Grass	2 Gallon	12"-15" Height

Plant Material Quality Note:

All plant materials shall be of number one quality and size for the container specified. All materials of each variety shall be furnished by the same supplier and come from the same stock or group. The Owner and Landscape Architect have the right to reject any and all plant materials not meeting specification or in a healthy condition for the project. The contractor shall secure all plant materials for the project a minimum of 60 days prior to the anticipated installation date. No plant material substitutions will be considered following this 60 day period. All plant materials shall be reviewed and approved prior to shipment to the site.

Planting Notes

1. All lawn areas shall receive a 4 inch depth of topsoil, all shrub planting areas shall receive an 8 inch depth of topsoil. In rock only areas, no topsoil shall be installed. Topsoil material is not expected to be from on-site sources, and shall be imported from approved local sources. All topsoil material used for in for landscape purposes shall be of a sandy loam mix.
2. Prior to placement of topsoil, all subgrade areas shall be loosened by scarifying the soil to a depth of 6 inches, by the use of mechanical means, in order to create a transition layer.
3. All lawn areas shall be sodded using high grade material of a water conservative mixture, and shall be composed of turf type "Tall Fescue" and/or Bluegrass. Prior to installation, all areas shall receive a starter fertilizer applied at the rate recommended by the manufacturer.
4. All plant material holes shall be dug twice the diameter of the rootball and 6 inches deeper. Excavated material shall be removed from the site.
5. Plant backfill mixture shall be composed of 3 parts topsoil to 1 part humus additive, and shall be rotary mixed on-site prior to installation.
6. Plant fertilizer shall be 'Agriform' brand 21 gram tablets used as per manufacturers recommendations.
7. All trees located in lawn areas shall receive an "Arbor Guard" trunk protector, or equal, and have a 36 inch diameter soil-free ring. All trees shall be staked for wind protection, unless indicated.
8. Upon completion of planting operations, all shrub pits and tree wells shall receive a four inch depth of fine ground bark mulch mixture as a cover. The overall shrub beds themselves shall receive a 4" depth of decorative stone surfacing over 30 mil. weed barrier fabric. Provide sample for each type of stone specified. The different rock sizes shall be of various colors, but in the "earth tones" to match the building. All stone material shall be of a clean and/or a "washed" product.
9. In decorative stone beds, cut the fabric from around the water well of each plant, then apply fine ground bark inside water well. The remainder of the planter bed shall receive the depth of decorative stone.
10. Landscape maintenance shall be required for a period of 30 days, or two mowings of the lawn, and shall include mowing, weeding, pruning and a minimum of one fertilizations of the lawn.
11. The project shall be swept clean of dirt and debris prior to completion of the project, and on a daily basis, if required, as determined by the Owner/contractor.
12. The contractor shall comply with all warranties and guarantees set forth by the Owner, and in no case shall that period be less than one year following the date of final completion and acceptance.

Planting General Notes

1. The contractor shall verify the exact location of all existing and proposed utilities, and all site conditions prior to beginning construction. The contractor shall coordinate his work with the project manager and all other contractors working on the site.
2. The finish grade of all planting areas shall be smooth, even and consistent, free of any humps, depressions or other grading irregularities. The finish grade of all landscape areas shall be graded consistently 1/2" below the topof all surrounding walks, curbs, etc.
3. The contractor shall stake the location of all plants for approval prior to planting. Trees shall be located equidistant from all surrounding plant material. Shrubs and ground covers shall be triangular spaced.
4. The plant materials list is provided as an indication of the specific requirements of the plants specified, wherever in conflict with the planting plan, the planting plan shall govern.
5. The contractor shall provide all materials, labor and equipment required for the proper completion of all landscape work as specified and shown on the drawings.
6. All plant materials shall be approved prior to planting. The Owner/Landscape Architect has the right to reject any and all plant material not conforming to the specifications. The Owner decision will be final.
7. The contractor shall keep the premises, storage areas and paving areas neat and orderly at all times. Remove trash, sweep, clean, hose, etc. daily.
8. The contractor shall plant all plants per the planting details, stake/guy as shown. The top of root balls shall be planted flush with finish grade.
9. The contractor shall not impede drainage in any way. The contractor shall always maintain positive drainage away from the building, walks, etc.
10. The contractor shall maintain all work until all work is complete and accepted by the Owner, but in no case less than 30 days following the date of substantial completion. Maintenance shall include mowing, weeding, pruning, fertilizing, cleaning, insecticides, herbicides, etc. and all other necessary for a complete service of project.
11. It shall be the contractors responsibility to ensure that any damaged or disturbed landscaping from the construction of this project is to be returned to as good or better condition.
12. It shall be the responsibility of the property owner to maintain all landscaping and irrigation facilities after construction at the end of the contractor warranty period.

Planting Submittal Requirements

1. The contractor shall provide to the Owner/Engineer product samples of all landscape materials such as rock/boulders, decorative stone, bark mulches, weed barrier fabric, soil ammendments & import topsoil in order to obtain approval to be used on the project, and prior to any shipment to the site. Failure to provide this in a timely manner will in no way affect or delay the construction schedule and time for project completion.
2. All plant materials shall be secured for the project a minimum of 60 days prior to shipment to the site. The contractor shall provide to the Owner/Engineer written confirmation of this a minimum of 30 days prior to planting of the project. No substitutions will be considered following this time period.

Sub-Grade Requirements

1. LAWN AREAS : Six (6) inches below finish grade. This will allow for the installation of a 4 inch depth of topsoil along with the sodding material, leaving it slightly below finish grade and concrete areas.
2. SHRUB AREAS : Twelve (12) inches below finish grade. This will allow for the installation of an 8 inch depth of topsoil along with a four inch depth of bark mulch or decorative stone mulch over the weed barrier fabric, leaving it slightly below finish grade and concrete areas.
3. ROCK (ONLY) AREAS : Five (5) inches below finish grade. This will allow for a four inch depth of decorative rock over the weed barrier fabric, leaving it slightly below finish grade and concrete areas.

PROJECT NUMBER
14-07

REVISIONS

SHEET TITLE
LANDSCAPE PLAN

PROJECT/OWNER
PLATINUM CAR WASH
HIGHWAY 73 AND COMMERCE DRIVE
SARATOGA SPRINGS, UTAH

ARCHITECT
NICHOLS • NAYLOR
A R C H I T E C T S
1155 EAST WILMINGTON AVENUE SUITE 250
SALT LAKE CITY, UTAH 84106 (801) 487-3330

DATE
MAY 12, 2014

SHEET NUMBER
L1.1

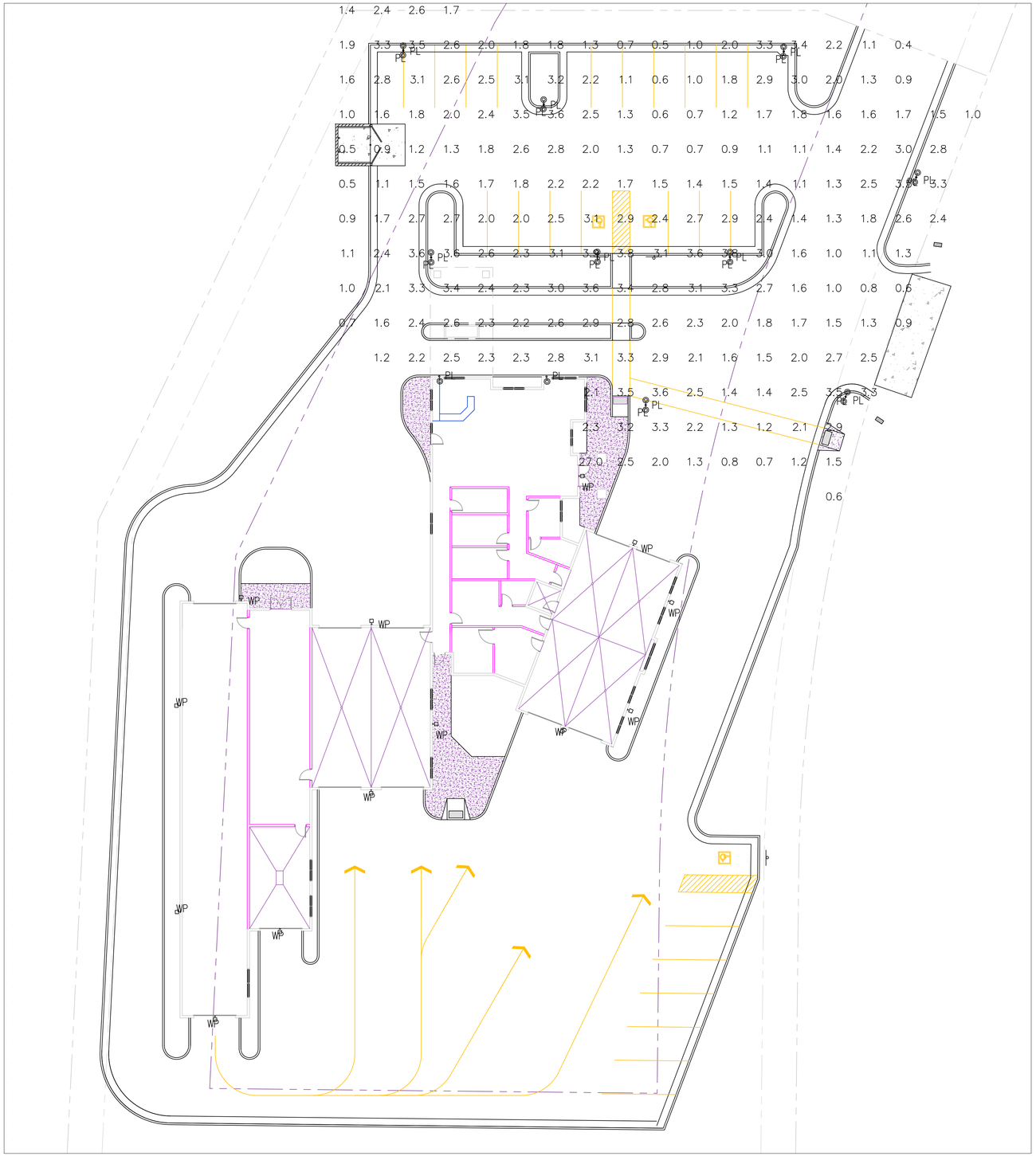

LUMINAIRE SCHEDULE

CALLOUT	SYMBOL	LAMP	DESCRIPTION	BALLAST	MOUNTING	MODEL	INPUT WATTS	VOLTS	NOTE 1	NOTE 2
PL	▶	(1) 15W LED	LUMINIS SCIROCCO SERIES LED LUMINAIRE WITH TRANSLUCENT JAR REFRACTOR AND CAST ALU WHITE BASE	ELECTRONIC	POLE	LUMINIS CANADA POINTE CLAIRE, QUEBEC, SCIRO-LCMS, 30LED	53.2	480/PLE	CNS WHITE, HIGHLY LED, LUMEN OUTPUT = 2500 LMS.	TWO ARMS ON DECORATIVE POLE TO MEET SITE STANDARDS
WP	●	(96) 1.5LEW LED	40 LED 25 Degree EDGE Fixed 350mm	ELECTRONIC	CEILING	RETROFIT, 2 Fixtures at Roof Lighting, Model: RFT-LED-40-25-350-WH or Equal CRI>=70 (350mA) 3000K	75.3	480/PLE	SATIN WHITE LEAF EMITTING DIODES (LEDS), VERTICAL BASE-UPWARDS.	

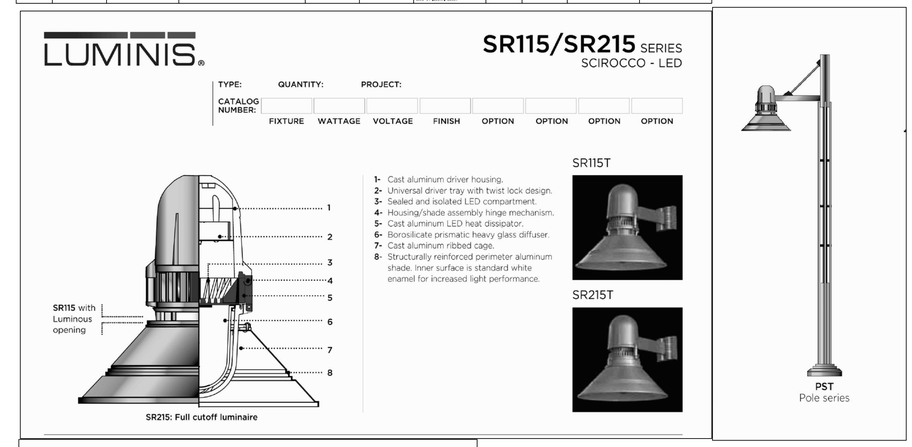

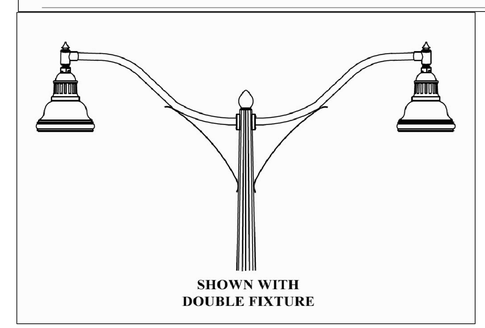

1 ES1

ELECTRICAL

SITE LIGHTING CALCS

0 16'-0" 32'-0"

SCALE: 1" = 16'-0"

NORTH

PROJECT NUMBER

14-07

REVISIONS

SHEET TITLE

SITE LIGHTING PLAN
SITE PLAN

PROJECT/OWNER

PLATINUM CAR WASH
HIGHWAY 73 AND COMMERCE DRIVE
SARATOGA SPRINGS, UTAH

ARCHITECT

REGISTERED PROFESSIONAL ENGINEER
No. 152313
JOSEPH S. HANCOCK
STATE OF UTAH

NICHOLS • NAYLOR
ARCHITECTS
1155 EAST WILMINGTON AVENUE SUITE 250
SALT LAKE CITY, UTAH 84106 (801) 487-3330

DATE

FEBRUARY 11, 2014

SHEET NUMBER

ES1

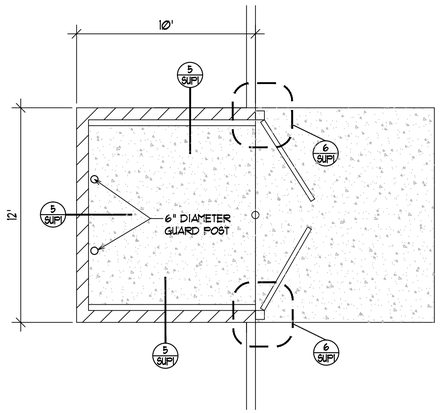

1 A3 TRASH ENCLOSURE PLAN

SCALE: 1/4" = 1'-0"

NORTH

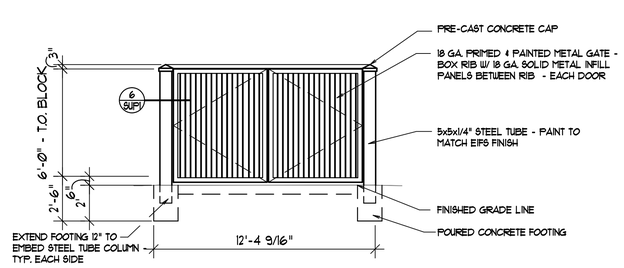

2 A3 TRASH ENCLOSURE TYPICAL FRONT ELEVATION

SCALE: 1/4" = 1'-0"

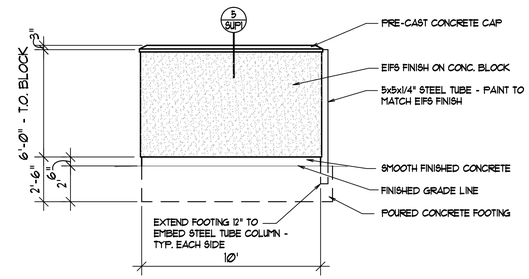

3 A3 TRASH ENCLOSURE TYPICAL SIDE ELEVATION

SCALE: 1/4" = 1'-0"

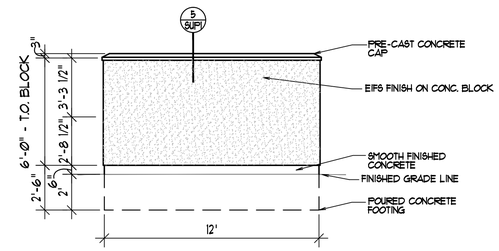

4 A3 TRASH ENCLOSURE TYPICAL REAR ELEVATION

SCALE: 1/4" = 1'-0"

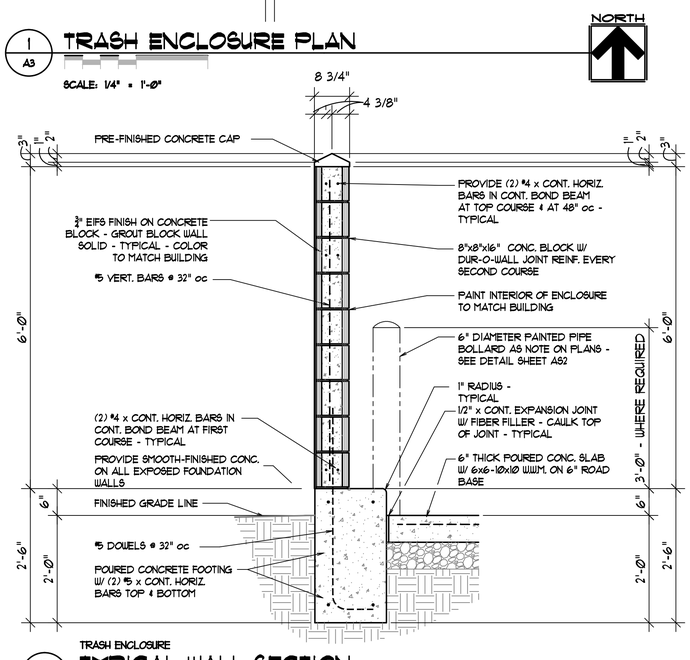

5 A3 TRASH ENCLOSURE TYPICAL WALL SECTION

SCALE: 3/4" = 1'-0"

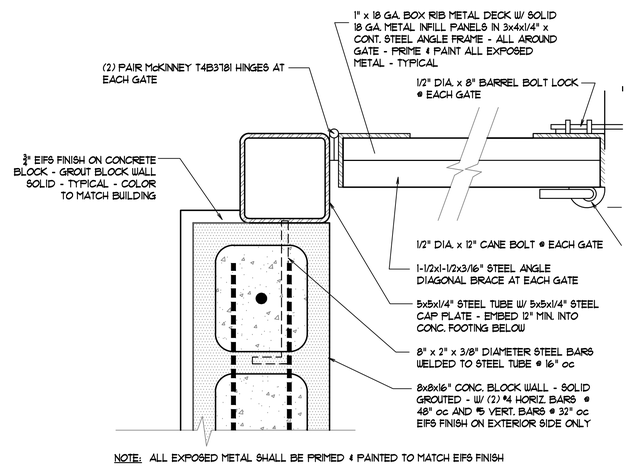

NOTE: ALL EXPOSED METAL SHALL BE PRIMED & PAINTED TO MATCH EIFS FINISH

6 A3 TRASH ENCLOSURE TYPICAL JAMB DETAIL

SCALE: 3" = 1'-0"

PROJECT NUMBER

14-07

REVISIONS

SHEET TITLE

DUMPSTER DETAILS

PROJECT/OWNER

PLATINUM CAR WASH
HIGHWAY 73 AND COMMERCE DRIVE
SARATOGA SPRINGS, UTAH

ARCHITECT

NICHOLS • NAYLOR
ARCHITECTS
1155 EAST WILMINGTON AVENUE SUITE 250
SALT LAKE CITY, UTAH 84106 (801) 487-3330

DATE

FEBRUARY 11, 2014

SHEET NUMBER

A3

RENDERING OF SIMILAR BUILDING, NOT EXACT MATCH

RECEIVED APR 08 2014

SHEET TITLE

PROJECT/OWNER

PLATINUM CAR WASH
HIGHWAY 73 AND COMMERCE DRIVE
SARATOGA SPRINGS, UTAH

ARCHITECT

NICHOLS • NAYLOR
A R C H I T E C T S
1155 EAST WILMINGTON AVENUE SUITE 250
SALT LAKE CITY, UTAH 84106 (801) 487-3330

DATE

FEBRUARY 11, 2014

EAST ELEVATION

SYNTHETIC STONE VENEER	20%
STUCCO	45%
STOREFRONT GLASS/OVERHEAD DOORS	20%
CMU BLOCK	5%

NORTH ELEVATION

SHEET TITLE

PROJECT/OWNER

PLATINUM CAR WASH
HIGHWAY 73 AND COMMERCE DRIVE
SARATOGA SPRINGS, UTAH

ARCHITECT

NICHOLS • NAYLOR
A R C H I T E C T S
1155 EAST WILMINGTON AVENUE SUITE 250
SALT LAKE CITY, UTAH 84106 (801) 487-3330

DATE

FEBRUARY 11, 2014

The west elevation has been updated to include trellises with plants growing on them. See line drawings of elevations (next page).

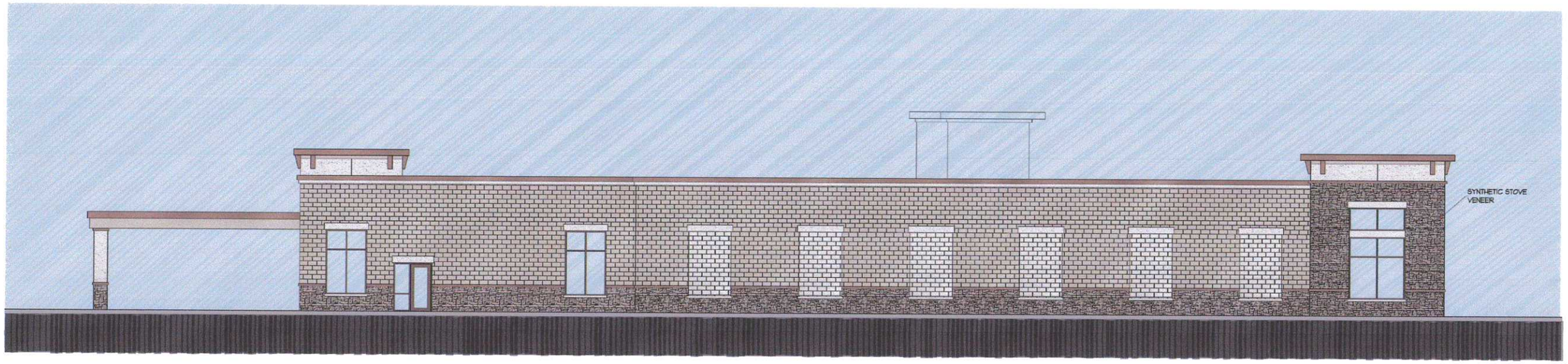

WEST ELEVATION

SYNTHETIC STONE VENEER:	20%
STUCCO:	45%
STOREFRONT GLASS/OVERHEAD DOORS:	20%
CMU BLOCK:	15%

SOUTH ELEVATION

SHEET TITLE

PROJECT/OWNER

PLATINUM CAR WASH
HIGHWAY 73 AND COMMERCE DRIVE
SARATOGA SPRINGS, UTAH

ARCHITECT

NICHOLS • NAYLOR
ARCHITECTS
1155 EAST WILMINGTON AVENUE SUITE 250
SALT LAKE CITY, UTAH 84106 (801) 487-3330

DATE

FEBRUARY 11, 2014

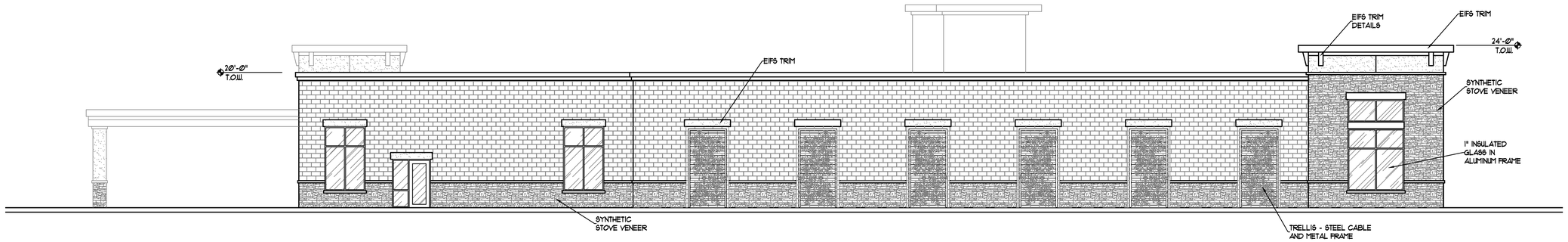

1 / A3 WEST
EXTERIOR ELEVATIONS
0 2 4 6 8 16'
SCALE: 1/8" = 1'-0"

SYNTHETIC STONE VENEER:	20%
STUCCO:	45%
STOREFRONT GLASS/OVERHEAD DOORS:	20%
C.M.U. BLOCK:	15%

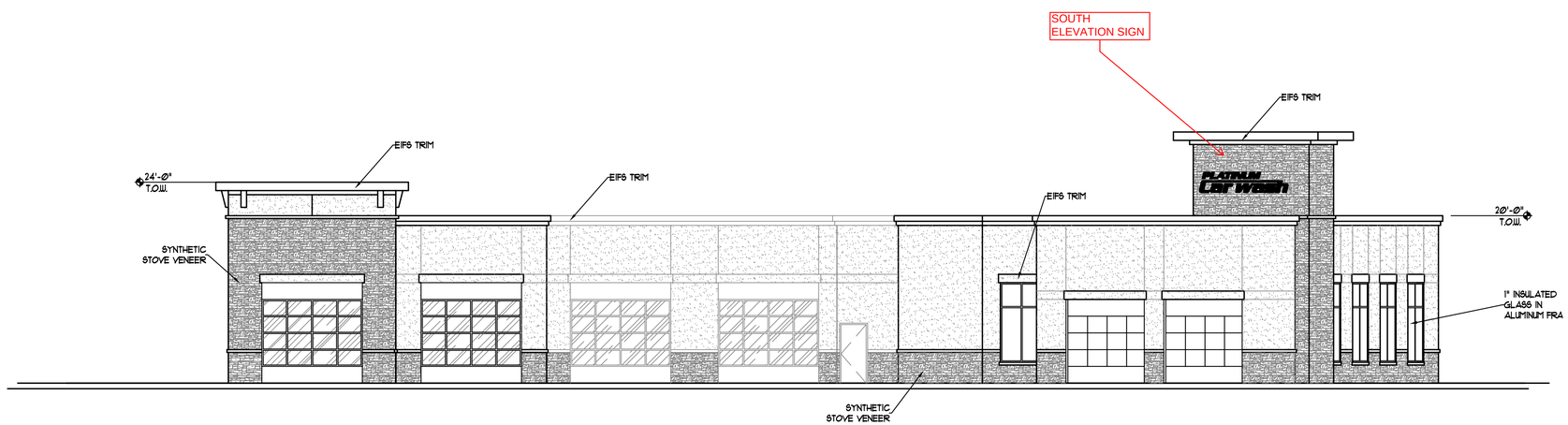

2 / A3 SOUTH
EXTERIOR ELEVATIONS
0 2 4 6 8 16'
SCALE: 1/8" = 1'-0"

PROJECT NUMBER
14-07

REVISIONS

SHEET TITLE
EXTERIOR ELEVATIONS

PROJECT/OWNER
PLATINUM CAR WASH
HIGHWAY 73 AND COMMERCE DRIVE
SARATOGA SPRINGS, UTAH

ARCHITECT

NICHOLS • NAYLOR
ARCHITECTS
1155 EAST MILLMINGTON AVENUE SUITE 250
SALT LAKE CITY, UTAH 84106 (801) 487-3330

DATE
FEBRUARY 11, 2014

SHEET NUMBER
A2.2

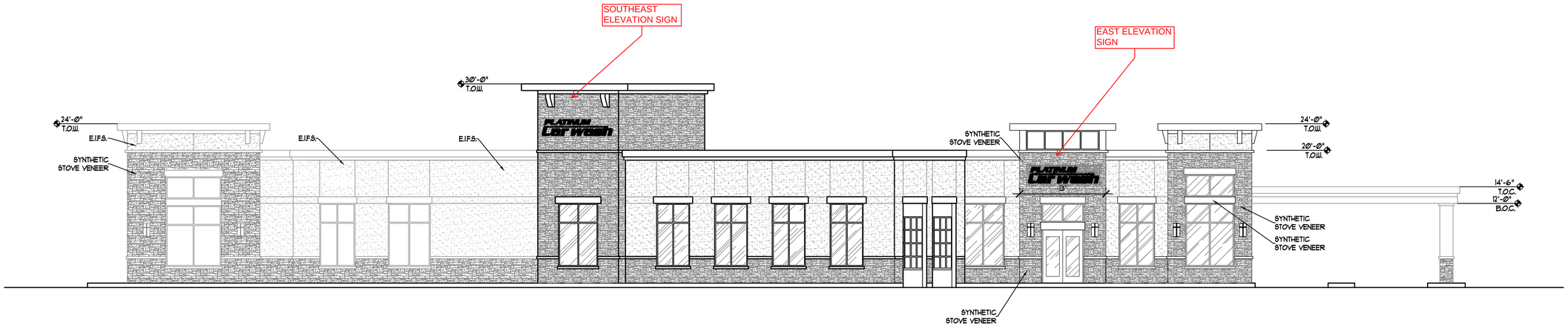

1 / A2.1 EAST
EXTERIOR ELEVATIONS
0 2 4 6 8 16'
SCALE: 1/8" = 1'-0"

SYNTHETIC STONE VENEER:	20%
STUCCO:	45%
STOREFRONT GLASS/OVERHEAD DOORS:	20%
CMU BLOCK:	15%

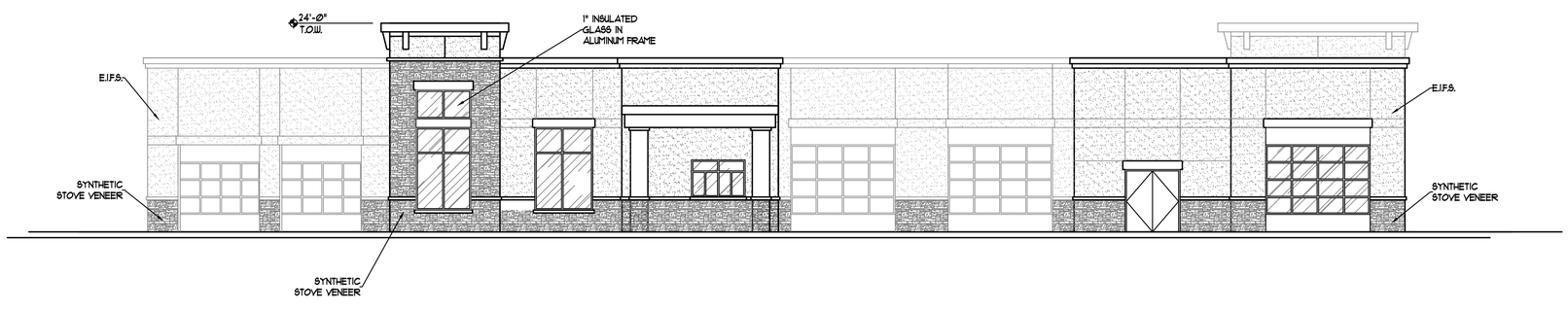

1 / A2.1 NORTH
EXTERIOR ELEVATIONS
0 2 4 6 8 16'
SCALE: 1/8" = 1'-0"

PROJECT NUMBER
14-07

REVISIONS

SHEET TITLE
EXTERIOR ELEVATIONS

PROJECT/OWNER
PLATINUM CAR WASH
HIGHWAY 73 AND COMMERCE DRIVE
SARATOGA SPRINGS, UTAH

ARCHITECT

NICHOLS • NAYLOR
ARCHITECTS
1155 EAST WILMINGTON AVENUE SUITE 250
SALT LAKE CITY, UTAH 84106 (801) 487-3330

DATE
FEBRUARY 11, 2014

SHEET NUMBER
A2.1

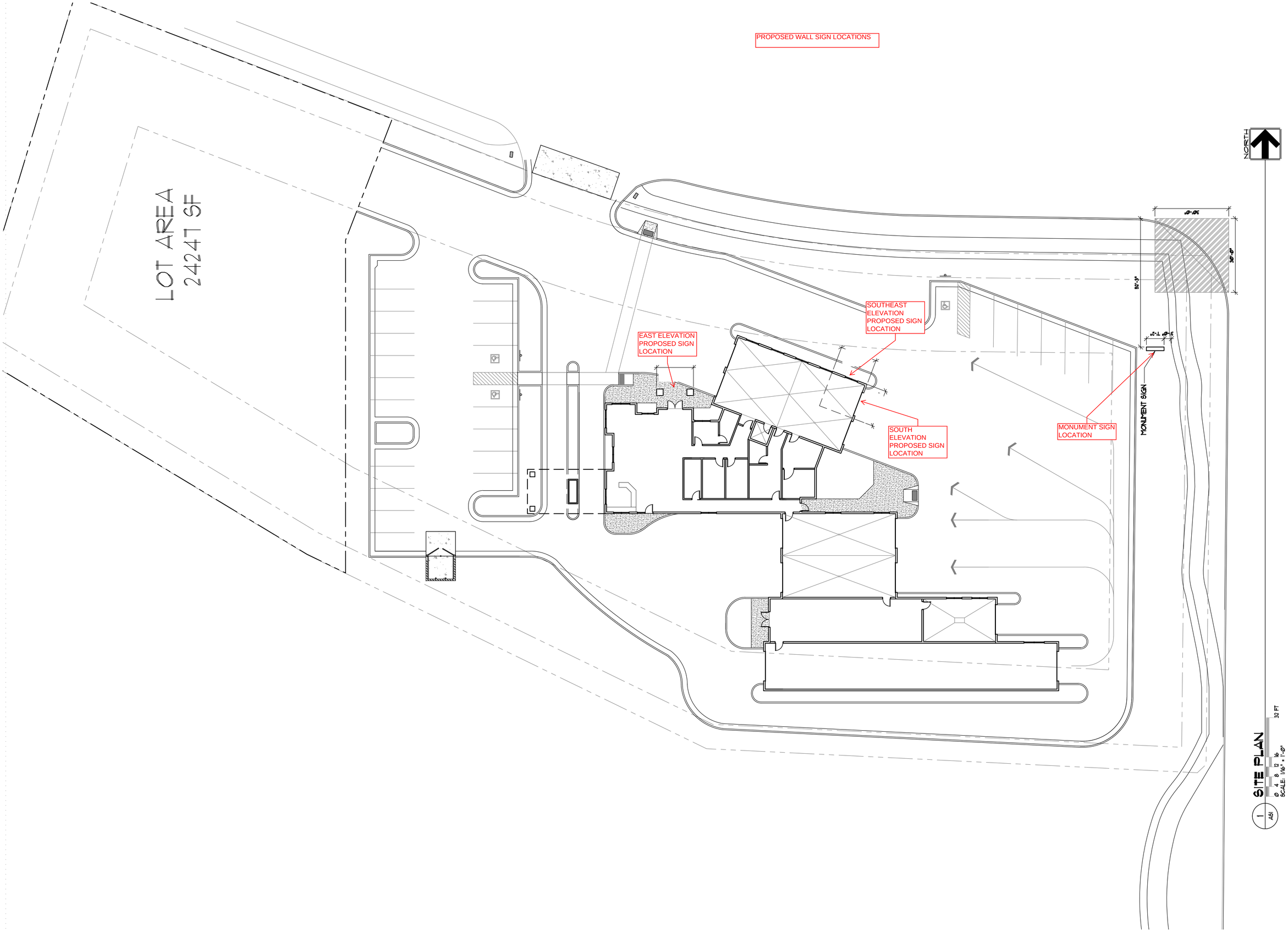

PROJECT NUMBER

14-07

REVISIONS

SHEET TITLE

FLOOR PLAN

PROJECT/OWNER

PLATINUM CAR WASH
HIGHWAY 73 AND COMMERCE DRIVE
SARATOGA SPRINGS, UTAH

ARCHITECT

NICHOLS • NAYLOR
A R C H I T E C T S
1155 EAST WILMINGTON AVENUE SUITE 250
SALT LAKE CITY, UTAH 84106 (801) 487-3330

DATE

FEBRUARY 11, 2014

SHEET NUMBER

A1

BUILDING FRONTAGE DIMENSIONS
FOR WALL SIGN LOCATIONS

PROJECT NUMBER
14-07

REVISIONS

SHEET TITLE
FLOOR PLAN

PROJECT/OWNER
PLATINUM CAR WASH
HIGHWAY 73 AND COMMERCE DRIVE
SARATOGA SPRINGS, UTAH

ARCHITECT

NICHOLS • NAYLOR
A R C H I T E C T S
1155 EAST WILMINGTON AVENUE SUITE 250
SALT LAKE CITY, UTAH 84106 (801) 487-3330

DATE
FEBRUARY 11, 2014

SHEET NUMBER
A1

PLATINUM CAR WASH - MONUMENT SIGN

MANUFACTURE AND INSTALL (1) D/F MONUMENT SIGN

- **A** FACES: TRANS WHITE SG PLEX WITH V1 APPLIED
  VANDAL COVER: CLEAR LEXAN
- **B** MAIN SIGN BODY: ALL ALUMINUM CONSTRUCTION PAINTED P1
- **C** RETAINERS: .090 ALUMINUM 2" PAINTED P1
- **D** PYLON COVER: ALL ALUMINUM CONSTRUCTION PAINTED P2
- **E** ILLUMINATION: VERTICAL T12 LAMPING
- **G** BALLAST: HOUSED IN CABINET
- **H** SUPPORT/EMBEDMENT: 6" DIA PIPE, 1-6" DIA X 6'-0" DEEP
  (SEE ENGINEERING FOR SPECS)

• DISCONNECT SWITCH AT SIGN

PAINT SCHEDULE
(SCREEN AND PRINT COLORS MAY VARY FROM FINISHED PRODUCT)

- P1: LT. BEIGE
- P2: FINE STUCCO (TBD)

VINYL SCHEDULE
(SCREEN AND PRINT COLORS MAY VARY FROM FINISHED PRODUCT)

- V1: 3M BLACK 230-22
- V2: 3M RED 230-33
- V3: 3M SILVER GREY 230-61

	PROPOSED SIGN		
SIGN B	PLATINUM CAR WASH & DETAIL		
	HEIGHT	WIDTH	AREA
MONUMENT	7'-6"	7'-2"	36.66 SF

ALLOWED SIGN AREA	45 SF
PROPOSED TOTAL WALL SIGN AREA	36.66 SF

VANDAL COVER

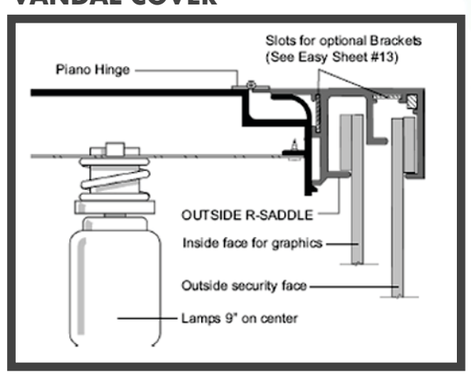

PROPOSED ELEVATION
SCALE: 3/4"=1'0"

Utah Contractors: 375809-5501 • Nevada:60486 • Colorado:23778 • Idaho:RCE-29969

THIS IS AN ORIGINAL UNPUBLISHED DRAWING CREATED BY ALLIED ELECTRIC SIGN. IT IS SUBMITTED FOR YOUR PERSONAL USE IN CONNECTION WITH THE PROJECT BEING PLANNED FOR YOU. IT IS NOT TO BE REPRODUCED, COPIED OR EXHIBITED.

ALLIED ELECTRIC SIGN & Awning
Signs that build business!

UTAH COUNTY:
1852 N. Parkway Court
Springville, UT 84663
(801) 489-3645
WWW.ALLIED-SIGN.COM

DRAWING STEPS
- ☐ CONCEPT
- ☐ ESTIMATING
- ☐ PERMIT/LANDLORD
- ☐ PRODUCTION

DRAWING REVIEW NAME
PRODUCTION REVIEW NAME

Client: Platinum Car Wash
Address: Highway 73 Commerce Drive
Saratoga Springs, UT
Date: 02-20-2014

SALES APPROVAL:
Designer: Richard
Sales: Chris
File: Platinum Car Wash - Monument - 2-20-2014

CUSTOMER APPROVAL:

SALT LAKE CITY: 1920 S 900 W, SLC, UT 84104 • (801) 972-5503 **OGDEN:** 2924 Pennsylvania Avenue • (801) 621-4612

PLATINUM CAR WASH - PCL

MANUFACTURE AND INSTALL (3) SETS OF CHANNEL LETTERS

- Ⓐ FACES: 3/16" TRANS RED SG PLEX
- Ⓑ TRIM: 1" BLACK TRIMCAP
- Ⓒ RETURNS: .040 ALUMINUM 5" DEEP PAINTED P1
- Ⓓ BACKS: .063 ALUMINUM STOCK COLOR
- Ⓔ ILLUMINATION: WHITE CAO LEDs
- Ⓕ POWER SUPPLY: REMOTE HOUSED IN POWER SUPPLY BOX
- Ⓖ FLUSH MOUNTED TO FASCIA (SEE ATTACHMENT DETAIL)
- Ⓗ FCO LETTERS: .125 ALUMINUM PAINTED P2, P3

* 120V SERVICE SUPPLIED BY OTHERS
* DISCONNECT SWITCH AT SIGN

PAINT SCHEDULE
(SCREEN AND PRINT COLORS MAY VARY FROM FINISHED PRODUCT)

- P1: SEMI GLOSS WHITE
- P2: SEMI GLOSS RED
- P3: GLOSS BLACK

POWER REQUIREMENTS
(1) 20 AMP CIRCUIT
120 VOLTS

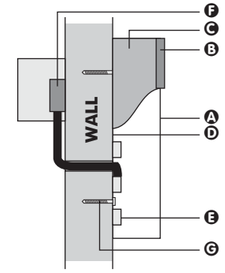

TYPICAL SECTION VIEW
NTS

	PROPOSED SIGN		
SIGN A	PLATINUM CAR WASH & DETAIL		
	HEIGHT	WIDTH	AREA
C/L	3'-6"	11'-0"	29.5 SF

PROPOSED TOTAL WALL SIGN AREA	97.51 SF

PROPOSED LAYOUT
SCALE: 1"=1'0"

Utah Contractors: 375809-5501 • Nevada:60486 • Colorado:23778 • Idaho:RCE-29969

THIS IS AN ORIGINAL UNPUBLISHED DRAWING CREATED BY ALLIED ELECTRIC SIGN. IT IS SUBMITTED FOR YOUR PERSONAL USE IN CONNECTION WITH THE PROJECT BEING PLANNED FOR YOU. IT IS NOT TO BE REPRODUCED, COPIED OR EXHIBITED.

ALLIED ELECTRIC SIGN & Awning
Signs that build business!

UTAH COUNTY:
1852 N. Parkway Court
Springville, UT 84663
(801) 489-3645
WWW.ALLIED-SIGN.COM

DRAWING STEPS
- ☐ CONCEPT
- ☐ ESTIMATING
- ☐ PERMIT/LANDLORD
- ☐ PRODUCTION

DRAWING REVIEW NAME
PRODUCTION REVIEW NAME

Client: Platinum Car Wash	SALES APPROVAL:	CUSTOMER APPROVAL:
Address: Highway 73 Commerce Drive	Designer: Richard	
Saratoga Springs, UT	Sales: Chris	
Date: 02-20-2014	File: Platinum Car Wash - Monument - 2-20-2014	

SALT LAKE CITY: 1920 S 900 W, SLC, UT 84104 • (801) 972-5503 **OGDEN:** 2924 Pennsylvania Avenue • (801) 621-4612

CITY OF SARATOGA SPRINGS

City Council
Staff Report

Concept Plan
Sierra Estates Senior Housing
June 17, 2014
Public Meeting

Report Date:	June 10, 2014
Applicant/Owner:	Ross Welch, Sunset Mountain Properties
Location:	Approximately 350 West 400 North
Major Street Access:	400 North
Parcel Number(s) & Size:	58:035:0048; 13.84 acres
Parcel Zoning:	R-6, Medium Density Residential
Adjacent Zoning:	R-6, RR, R-10, MU, A
Current Use of Parcel:	Vacant
Adjacent Uses:	Low Density Residential, future school bus lot, New Haven girls school, undeveloped property
General Plan Designation:	Low Density Residential
Previous Meetings:	MDA reviewed by PC 2-27-14
Previous Approvals:	MDA approved by CC 3-25-14
Land Use Authority:	Concept Plan requires review by Planning Commission and City Council
Future Routing:	Preliminary Plat and/or Site Plan application required
Author:	Sarah Carroll, Senior Planner

A. Executive Summary:

This is a request for review of the Sierra Estates Senior Housing Concept Plan located at approximately 350 West 400 North. The site is comprised of approximately 13.84 acres and is zoned R-6, Medium Density Residential. The Concept Plan proposes 56 attached units, 20 single family lots and an assisted living facility. The proposed density is 5.56 units per acre.

Recommendation:
Staff recommends that the City Council conduct a public meeting and provide informal direction to the applicant and staff regarding the conceptual subdivision. No official motion or recommendation is provided for Concept Plans.

B. Background:

On February 27, 2014, the Planning Commission reviewed the Sierra Estates Master Development Agreement (MDA) and recommended approval to the City Council. On March 25, 2014, the City Council approved the MDA. The Senior Housing concept plan was presented with the MDA and it was requested by some Commissioners that the Concept plan be brought back at a later date for additional review. There have been minor changes to the concept plan, including: combining the food services building with the main building, identifying a golf cart parking location, adding an

Sarah Carroll, Senior Planner
1307 North Commerce Drive, Suite 200 • Saratoga Springs, Utah 84045
scarroll@saratogaspringscity.com • 801-766-9793 x 106 • 801-766-9794 fax

outbuilding for yard maintenance equipment, moving the dumpster location, identifying van accessible parking stalls, adding a drop off lane for the food services building, identifying delivery truck loading locations, verifying setbacks, and moving the guest parking that was between buildings 1 and 2 to the north so it is between buildings 2 and 3.

C. Specific Request:

This is a request for review of the proposed concept plan. The applicant is proposing a senior housing community with 20 single family lots, 56 cottage units and an assisted living facility. The proposed development will be an "age-in-place" community that will allow seniors to transition from independent living to assisted living as they age.

D. Process:

Per section 19.13.04(6) of the City Code, a Concept Plan application shall be submitted before the filing of an application for Subdivision or Site Plan approval. The Concept Plan review involves an informal review of the plan by the DRC, Planning Commission and City Council to guide the developer in the preparation of subsequent applications.

E. Review:

The recently approved Sierra Estates Master Plan allows for the proposed development and a similar concept plan was presented with that application. The assisted living facility is a conditional use in the R-6 zone. The Conditional use application will be required concurrent with the site plan and/or subdivision applications in the future.

F. Community Review:

There is no requirement to notice concept plans because the comments received from the Planning Commission or City Council are not binding. Formal community interaction will occur once a public hearing is scheduled as part of the subdivision and/or site plan review. However, public input was received during the MDA process. Residents to the north of this site were concerned about the height of the future homes and whether or not the project would include fencing.

G. Planning Commission Review:

The Planning Commission reviewed the proposed concept plan on May 22, 2014. Comments from the Commissioners are summarized below:

Commissioner Steele

- For the van accessible space in the employee parking area, it is recommended that the loading area be on the passenger side.
- Asked that they comply with current state statutes which changes on April 1, 2014.

Commissioner Williamson:

- Likes the new plan

Commissioner Reese:

- Likes the plan, it looks fantastic

Commissioner Wilkins:

- Setbacks are met, parking is distributed, looks like it complies

Commissioner Cochran:

- Appreciates the details and the modifications to the plan

H. General Plan:

The General Plan designates this area for Low Density Residential development; the property is zoned R-6, Medium Density Residential. The Land Use Element of the General Plan defines Low Density Residential as one to four units per acre.

Finding: inconsistent. The original MDA contemplated R-6 density and the zone was approved prior to the recent amended MDA. At the time of rezoning, the zone was reviewed under the then existing general plan. For clarity, a general plan amendment is recommended to create consistency with the general plan and the existing zoning and MDA, however this is not required.

I. Code Criteria:

Section 19.12.03 of the City Code states, *"All subdivisions are subject to the provisions of Chapter 19.13, Development Review Process".* The following criteria are pertinent requirements for Preliminary Plats listed in Sections 19.12 (Subdivision Requirements) and 19.04.16 (R-6 Requirements) of the City Code.

Permitted or Conditional Uses: complies. Section 19.04.16(2 & 3) lists all of the permitted and conditional uses allowed in the R-6 zone. The Concept Plan shows single family residential building lots, cottage style townhomes, and an assisted living facility. In the R-6 zone single-family dwellings, and two-family and three-family structures are permitted uses. "Residential Facilities for Elderly Persons" are conditional uses. The assisted living facility will require a conditional use application and permit in the future.

Minimum Lot Sizes: complies. 19.04.16(4) states that the minimum lot size for residential lots is 6,000 square feet. The smallest lot size on the Concept Plan is 6,000 square feet, complying with this requirement.

Setbacks and Yard Requirements: can comply. Section 19.04.16(5) outlines the setbacks required by the R-6 zone. These requirements are:

Front: twenty-five feet
Sides: single family residences: 5 feet/ 10 combined
two-family and three-family structures: 10 feet
Rear: twenty feet
Corner: Front: 25 feet
Side abutting street: 20 feet
Accessory Buildings: all accessory buildings are required to maintain a distance of 5 feet from property lines and dwellings.

The dimensions on the concept plan indicate that these requirements are being met for the cottage units, the assisted living facility and the accessory structure. The setbacks for the single family lots will be reviewed with each individual building permit.

Parking, vehicle and pedestrian circulation: can comply. Section 19.09.11 requires single-family homes to have a minimum 2 parking stalls within an enclosed garage. Driveways leading to the required garages must be a minimum 20 feet in length. This requirement will be reviewed by the building department with each building permit application for the single-family lots.

Section 19.09.11 requires multi-family units to have 2.25 stalls per dwelling with 1 enclosed garage. The proposed cottage units have one enclosed garage, a driveway, and guest stalls throughout the site; 56 units will require 14 guest stalls. The concept plan includes 24 guest parking stalls throughout the site, exceeding the requirement.

The parking requirement for "residential facilities for elderly persons" is currently "to be determined by the Planning Commission" per Section 19.09.05(6), which states:

6. Where no comparative land use standard for parking is found in Section 19.09.11, Required Parking by Zone, the City Development Review Committee, Planning Commission, or City Council shall determine an appropriate requirement using the following criteria:
    a. the intensity of the proposed use;

b. times of operation and use;
c. whether the hours or days of operation are staggered thereby reducing the need for the full amount of required parking;
d. whether there is shared parking agreement in accordance with Section 19.09.10 below—if there is a shared parking agreement, a reduction may not be granted;
e. the number of employees;
f. the number of customers and patrons;
g. trip generation; and
h. peak demands.

The current proposal is that the facility will have 16 parking stalls in front (including 4 accessible stalls), 15 employee stalls (including 1 accessible stall), and 21 visitor stalls (including 4 accessible stalls); for a total of 53 parking stalls. The applicant will be required to submit additional information with the preliminary plat and/or site plan application to determine if adequate parking is being provided.

Fencing: can comply. Section 19.06.09 requires fencing along property lines abutting open space, parks, trails, and easement corridors. The Code also states that in an effort to promote safety for citizens using these trail corridors and security for home owners, fences shall be semi-private. Staff recommends privacy fencing along the north and east property lines. A fencing plan will be required with the preliminary plat application.

Open Space: complies. The open space requirements were reviewed and approved with the MDA. The MDA requires 20% of the project area to be open space. The concept plan indicates 3.61 acres (26%) of open space.

Sensitive Lands: complies. Sensitive lands may only be used for up to 50% of the required open space. Sensitive Lands are defined in Section 19.02.02 as:

> land and natural features including canyons and slopes in excess of 30%, ridge lines, natural drainage channels, streams or other natural water features, wetlands, flood plains, landslide prone areas, detention or retention areas, debris basins, and geologically sensitive areas.

Credit toward meeting the open space requirement may be given for sensitive lands per the following code criteria:

a. Sensitive lands shall not be included in the base acreage when calculating the number of ERUs permitted in any development and no development credit shall be given for sensitive lands.
b. All sensitive lands shall be placed in protected open space.
c. Sensitive lands may be used for credit towards meeting the minimum open space requirements. However, no more than fifty percent of the required open space area shall be comprised of sensitive lands.

The proposed detention basin is considered sensitive land but is only 0.66 acres (18%) of the proposed open space. The applicant will be required to submit landscape plans for these open space areas with the preliminary plat and/or site plan application.

J. Recommendation and Alternatives:

No official action should be taken. The City Council should provide general direction and input to help the developer prepare for formal subdivision, Conditional Use, and/or site plan application.

Staff and Planning Commission recommend the following:

1. That all requirements of the City Engineer be met, including those listed in the attached staff report.
2. That all requirements of the Fire Chief be met, such as:
    a. Hydrant spacing must not exceed 400' inside of development proper. Fire flows must meet current and future needs.
    b. Assisted living home must be fire sprinkled and meet NFPA 13D standards.
    c. All streets must be a minimum of 26' wide exclusive of the curb.
3. The assisted living facility will require a conditional use application and permit.
4. The General Plan is currently inconsistent with the existing zoning. A general plan amendment is recommended to create consistency.
5. Provide privacy fencing along the north and east property lines. A fencing plan will be required with the preliminary plat application.
6. Verification that adequate parking is provided will be required with the Preliminary plat and/or site plan submittal. The required parking is "to be determined by the Planning Commission" based on data provided by the applicant.
7. Remove the note that the detention pond will be dedicated to the City.
8. Provide Van Accessible parking as required by ADAAG.
9. Comply with all applicable Utah Administrative Codes and Statutes.
10. Other comments as articulated by the City Council: _____
_____

K. Exhibits:

1. Engineering Report
2. Zoning / Location map
3. Concept Plan
4. Open Space Exhibit

City Council
Staff Report

Author: Jeremy D. Lapin, City Engineer
Subject: Sierra Estates Senior Housing
Date: May 22, 2014
Type of Item: Concept Plan Review

CITY OF SARATOGA SPRINGS

Description:

A. Topic: The applicant has submitted a concept plan application. Staff has reviewed the submittal and provides the following recommendations.

B. Background:

Applicant:	*Ross Welch, Sunset Mountain Properties*
Request:	*Concept Plan*
Location:	*Approximately 350 West 400 North*
Acreage:	*13.84 acres – 20 Single Family Lots, 56 Attached Units, and an Assisted Living Facility*

C. Recommendation: Staff recommends the applicant address and incorporate the following items for consideration into the development of their project and construction drawings.

D. Proposed Items for Consideration:

A. Prepare construction drawings as outlined in the City's standards and specifications and receive approval from the City Engineer on those drawings prior to receiving Final approval from the City Council.

B. Consider and accommodate existing utilities, drainage systems, detention systems, and water storage systems into the project design. Access to existing facilities shall be maintained throughout the project. Existing utilities shall be located in the public ROW pavement section or may need to be relocated.

C. Comply with the Land Development Codes regarding the disturbance of 30%+ slopes.

D. Incorporate a grading and drainage design that protects homes from upland flows.

E. Developer shall provide a traffic study to determine the necessary improvements to existing and proposed roads to provide an acceptable level of service for the

proposed project.

F. Project must meet the City Ordinance for Storm Water release (0.2 cfs/acre for all developed property) and all UPDES and NPDES project construction requirements.

G. Developer shall meet all applicable city ordinances and engineering conditions and requirements in the preparation of the Construction Drawings.

H. All review comments and redlines provided by the City Engineer are to be complied with and implemented into the construction drawings.

I. All work to conform to the City of Saratoga Springs Standard Technical Specifications, most recent edition.

J. Developer shall prepare and record easements to the City for all public utilities not located in a public right-of-way.

K. Developer is required to ensure that there are no adverse effects to adjacent property owners and future homeowners due to the grading and construction practices employed during completion of this project.

L. Developer shall ensure that the existing storm drain detention pond has adequate volume for the proposed development. It is the responsibility of the developer to verify adequate volume is provided based on updated detention calculations.

M. Access onto 400 North shall be in compliance with the access spacing standards as per the City's transportation master plan.

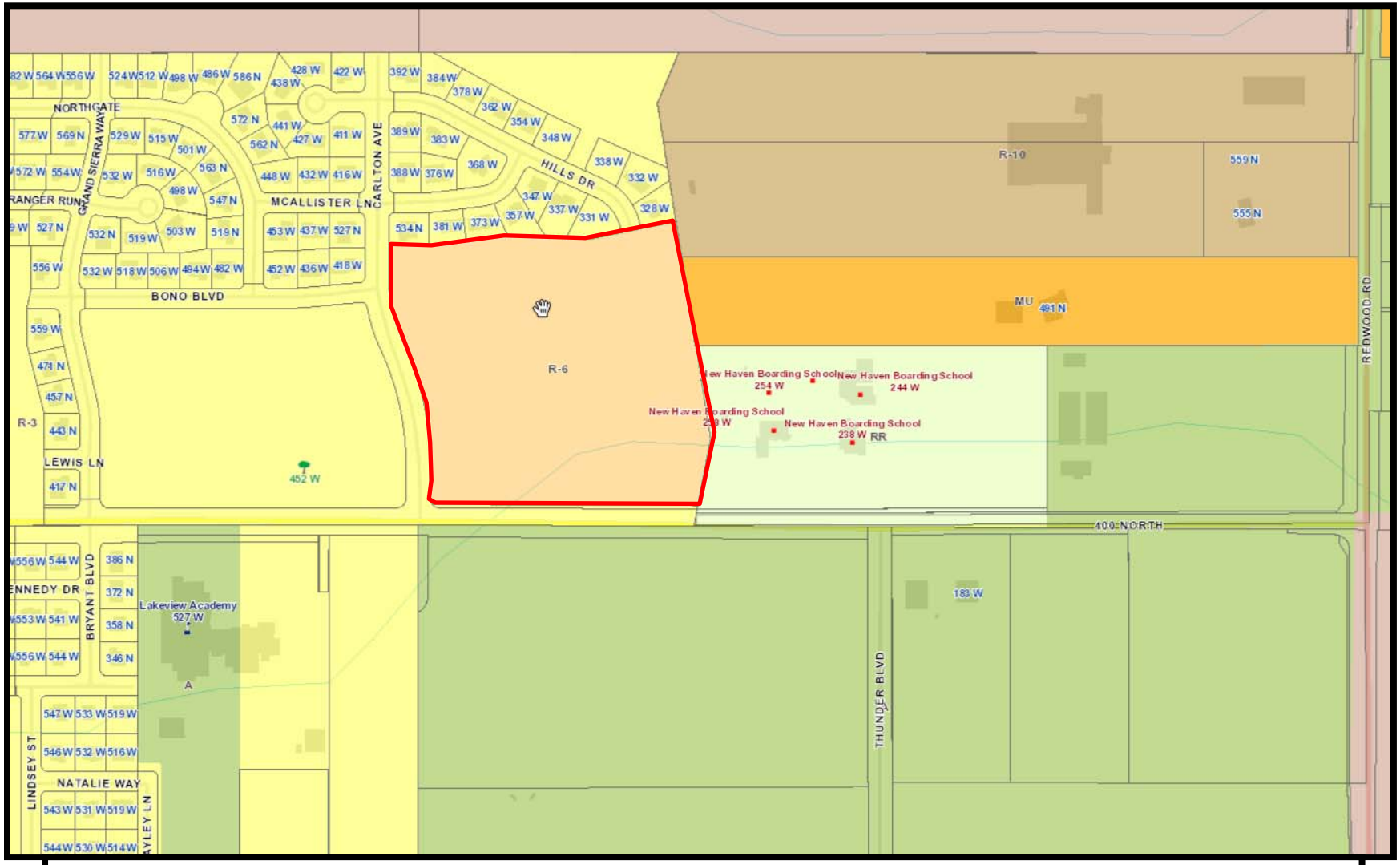
NORTHGATE
GRAND SIERRA WAY
RANGER RUN
CARLTON AVE
MCALLISTER LN
HILLS DR
BONO BLVD
LEWIS LN
R-3
R-6
R-10
MU
New Haven Boarding School
RR
400 NORTH
REDWOOD RD
THUNDER BLVD
BRYANT BLVD
ENNEDY DR
Lakeview Academy
LINDSEY ST
NATALIE WAY
AYLEY LN

Zoning Map

SIERRA ESTATES

REVISED SENIOR HOUSING PLAN R-6 ZONE

0 100 200

SCALE: 1" = 100'

TABULATIONS

DEVELOPMENT AREA	13.84 AC
MAX. DENSITY = 6 DU/AC =	83 UNITS
EXISTING ZONING	R-6
COTTAGE UNITS	56
SINGLE FAMILY HOMES	20
ASSISTED LIVING FACILITY (SEE SEPARATE F.U. CALC)	1 (CONDITIONAL USE PERMIT 1.95 AC)
TOTAL UNITS	77
DENSITY = 5.56 DU/AC	
CLUBHOUSE, MAIN FACILITY PARKING, AND ADDITIONAL VISITOR PARKING	76 STALLS

OPEN SPACE TABULATIONS

OPEN SPACE REQUIRED = 13.84 X 20%	= 2.77 ACRES
DEEDED HEREON FOR STORM DRAIN POND	= 0.66 ACRES
PRIVATE, USABLE, CONTIGUOUS, NON-OBSTRUCTED OPEN SPACE WITH WALKS, GAZEBO, BENCHES, LANDSCAPING, ETC. (REFER TO SEPERATE OPEN SPACE MAP)	= 2.95 ACRES
TOTAL OPEN SPACE PROVIDED	= 3.61 ACRES

*** NOTE: AN ADDITIONAL 1.33 ACRES OF OPEN SPACE IN EXCESS OF R-3 ZONE REQUIREMENTS EXISTS IN ALREADY DEDICATED NEPTUNE PARK.***

VICINITY SKETCH

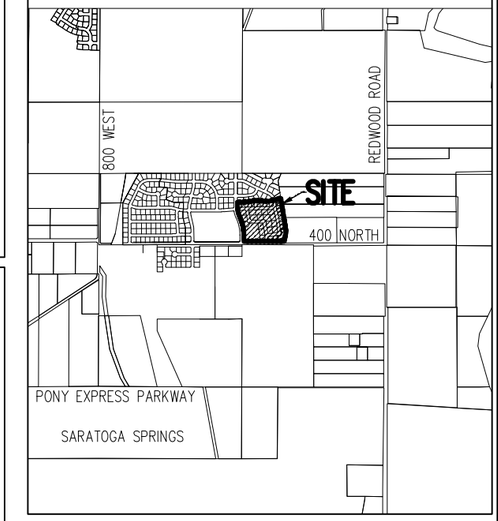

56' PUBLIC STREET CROSS SECTION

(RESIDENTIAL ROADWAY AS PER CITY STD. DWG. ST-8)

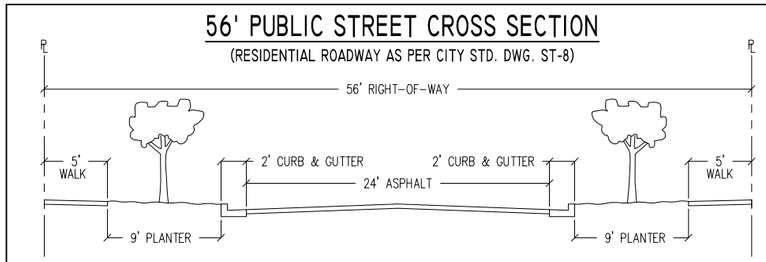

LEGAL DESCRIPTION OF SENIOR HOUSING PARCEL

SERIAL NUMBER: 58:035:0048

OWNED BY SUNSET MOUNTAIN PROPERTIES, LP

COMMENCING N 57.72 FT & E 38.92 FT FROM E 1/4 COR. SEC. 22, T5S, R1W, SLB&M.;

THENCE ALONG A CURVE TO THE RIGHT (CHORD BEARS N 18°27'20" W 15.78 FT, RADIUS = 25 FT) 16.05 FT; THENCE N 00°03'55" W 68.34 FT; THENCE N 01°16'53" W 85.03 FT; THENCE ALONG A CURVE TO THE LEFT (CHORD BEARS N 14°35'02" W 311.07 FT, RADIUS = 834 FT) 312.91 FT; THENCE ALONG A CURVE TO THE RIGHT (CHORD BEARS N12°42'34" W 159.97 FT, RADIUS = 366 FT) 61.27 FT; THENCE N 00°05'12" W 102.81 FT; THENCE N 89°57'07" E 126.63 FT; THENCE N 82°48'38" E 207.04 FT; THENCE S 87°53'53" E 239.08 FT; THENCE N 78°19'17" E 238.89 FT; THENCE S 08°54'00" E 353.54 FT; THENCE EAST 2.40 FT; THENCE S 08°54'0" E 263.84 FT; THENCE S 10°56'00" W 191.02 FT; THENCE N 89°43'03" W 745.95 FT TO THE POINT OF BEGINNING.

COMPRISING 13.84 ACRES.

GENERAL NOTES

1. THIS IS A REVISED CONCEPT PLAN FROM ORIGINAL APPROVAL GRANTED IN 2010 WITH R-6 ZONE AND WITH MASTER DEVELOPMENT PLAN IN 2006. THIS SITE BEING DEVELOPED AS A RESIDENTIAL FACILITY FOR ELDERLY PERSONS = CONDITIONAL USE.
2. THIS SENIOR HOUSING PROJECT FILLS THE AGING-IN-PLACE CONCEPT AND PROVIDES FACILITIES AND OPPORTUNITIES FOR SENIORS OF ALL AGES AND ACTIVITY LEVELS.
3. ALL STREETS ARE PUBLIC AND ARE TO BE MAINTAINED BY THE CITY.
4. ALL OPEN SPACE (INCLUDING THE STORM DRAIN POND) IS PRIVATE AND IS TO BE MAINTAINED BY THE HOA..
5. P.U.E.'s ARE TO BE GRANTED FOR POWER, GAS, TELEPHONE, AND CATV AS PER CITY STANDARD PLAN.
6. MINIMUM SETBACKS FOR THE R-6 ZONE ARE AS FOLLOWS: FRONT = 25', SIDE YARDS = 10', REAR = 20', SIDE CORNER LOTS = 15'.
7. ALL UNITS HAVE AT LEAST ONE SINGLE GARAGE PLUS ONE PARKING SPACE IN DRIVEWAY.
8. SINGLE FAMILY LOTS ARE FOR SALE. COTTAGES ARE FOR LEASE/RENT/SALE AND ARE A PART OF THE ASSISTED LIVING FACILITY.
9. FOOTPRINTS AND SHAPES OF COTTAGES MAY CHANGE SLIGHTLY WITH FINAL PLAT.
10. ALL STORM DRAINAGE TO ENTER ALREADY CONSTRUCTED DETENTION POND IN SOUTHEAST CORNER. PRESENT CONFIGURATION OF POND TO BE REVISED SLIGHTLY. SITE SLOPES GRADUALLY TO THE SOUTHEAST AND TO THE POND AT APPROX. 1%. SEE DRAINAGE ARROWS.
11. PARKING REQUIRED = VISITOR 56 / 4 = 14, ASSISTED LIVING = 48 UNITS / 1 PER 3 ROOMS = 16, EMPLOYEES = 10. TOTAL = 40 REQUIRED
12. ALL ROAD CENTERLINE CURVES = 200'.
13. AREA OF THE ASSISTED LIVING AND CLUBHOUSE BUILDING LOT = 1.95 ACRES.
14. PERIMETER FENCING AS RECOMMENDED BY CITY.
15. 6' WALKS AND PARKING BETWEEN BUILDINGS ARE IN EASEMENTS..

TWIN PEAKS ENGINEERING & DESIGN
1189 N. 1270 E. AMERICAN FORK, UT 84003
STEPHEN SOWBY, P.E. 801-636-7150 stevesowby@yahoo.com

SUNSET MOUNTAIN PROPERTIES, L.P.
11038 N. HIGHLAND BLVD.
HIGHLAND, UT 84003 (801) 756-7303

SIERRA ESTATES SENIOR HOUSING R-6 CONCEPT

DESIGN BY: SES	SCALE: 1"=100'	SHEET 1
DRAWN BY: RC	DATE: 12 MAY 2014	

SIERRA ESTATES

OPEN SPACE MAP

0 100 200

SCALE: 1" = 100'

TABULATIONS

DEVELOPMENT AREA	13.84 AC
MAX. DENSITY = 6 DU/AC =	83 UNITS
EXISTING ZONING	R-6
COTTAGE UNITS	56
SINGLE FAMILY HOMES	20
ASSISTED LIVING FACILITY (SEE SEPARATE F.U. CALC)	7 ERU
TOTAL UNITS	83
DENSITY = 6 DU/AC	
CLUBHOUSE, MAIN FACILITY PARKING, AND ADDITIONAL VISITOR PARKING	56 STALLS

OPEN SPACE TABULATIONS

OPEN SPACE REQUIRED = 13.84 X 20%	= 2.77 ACRES
DEEDED HEREON FOR STORM DRAIN POND	= 0.68 ACRES
PRIVATE, USABLE, CONTIGUOUS, NON-OBSTRUCTED OPEN SPACE WITH WALKS, GAZEBO, BENCHES, LANDSCAPING, ETC. (REFER TO SEPERATE OPEN SPACE MAP)	= 2.95 ACRES
TOTAL OPEN SPACE PROVIDED	= 3.63 ACRES

*** NOTE: AN ADDITIONAL 1.33 ACRES OF OPEN SPACE IN EXCESS OF R-3 ZONE REQUIREMENTS EXISTS IN ALREADY DEDICATED NEPTUNE PARK.***

Building	Private Open Space sf	ac
1	5290	0.12
2	5365	0.12
Club House	18417	0.42
3	7146	0.16
4	7783	0.18
5	7205	0.17
6	7018	0.16
7	4763	0.11
8	9345	0.21
9	4930	0.11
10	5501	0.13
11	5089	0.12
12	4403	0.10
13	5434	0.12
14	4621	0.11
15	5565	0.13
16	5496	0.13
17	4749	0.11
18	4870	0.11
19	5512	0.13
Total =	128499	2.95

TWIN PEAKS ENGINEERING & DESIGN
1189 N. 1270 E. AMERICAN FORK, UT 84003
STEPHEN SOWBY, P.E. 801-636-7150 stevesowby@yahoo.com

SUNSET MOUNTAIN PROPERTIES, L.P.
11038 N. HIGHLAND BLVD.
HIGHLAND, UT 84003 (801) 756-7303

SIERRA ESTATES SENIOR HOUSING R-6 CONCEPT

DESIGN BY: SES | SCALE: 1"=100' | SHEET 1

DRAWN BY: RC | DATE: 27 JANUARY 2014

Sarah Carroll
Senior Planner

City Council

Memorandum

Author: Sarah Carroll
Date: June 17, 2014
Re: River Heights Final Plat Phasing Plan

Applicant/Owner:	Bach Investments
Location:	Approximately 250 East Alhambra Drive
Land area:	Approximately 15.03 acres
Land Use Plan Designation:	Medium Density Residential
Zone:	R-6 and R-10, Medium Density Residential
Zoning of Adjacent Parcels:	R-14 and R-18, High Density Residential; R-10, Medium Density Residential; A, Agricultural
Current Use:	Roads are under construction
Adjacent Uses:	Townhomes (Summer Village and The Gables)
Prior Approvals:	Preliminary Plat: approved by City Council 5-7-13 Final Plat "A": approved by City Council 8-16-13 Phasing Plan: approved by City Council 1-7-14

Request:
In January of this year, the applicant received approval of a phasing plan with three phases. They would now like to modify the phasing plan and are requesting four phases. The previously approved phasing plan and the new phasing plan are attached.

Background:
The City Council approved the preliminary plat for the overall project on May 7, 2013. The final plat for River Heights Plat "A" was approved on August 16, 2013, and includes Phases 1 and 2. Phase 2 has been recorded.

Code Requirements:
Section 19.12.02(6) requires the City Council to approve phasing plans and states that "the open space or recreational facilities shall be developed in proportion to the number of dwellings intended to be developed during any stage of construction."

The applicant is requesting approval of the attached phasing plan. Phase 2 has already recorded; the applicant anticipates that this will be followed by Phase 1 and then by Phase 3 and finally by Phase 4. Each phase contains a proportionate share of open space and recreational amenities as described in the staff finding below. Staff recommends that Phase 4 be recorded last as this phase has the least amount of open space and amenities.

Staff finding: complies. The open space and recreational facilities are being developed in proportion to the number of units within each phase, as outlined below:

- Phase 1 is 4.30 acres and includes 37 units and 1.46 acres (33%) of open space.
- Phase 2 is 3.35 acres and includes 16 units and 0.66 acres (20%) of open space and the playground; this phase has been recorded.
- Phase 3 is 3.61 acres and includes 17 units and 0.77 acres (21%) of open space and the pavilion.
- Phase 4 is 3.75 acres and includes 19 units and 0.34 acres (9%) of open space.

Recommended Motion:
"I move to approve the attached phasing plan for the River Heights development, located at approximately 250 East Alhambra Drive, subject to the findings and conditions listed below:"

Findings:

1. The open space and recreational facilities are being developed in proportion to the number of units within each phase.
2. The total open space is 20% of the project area.
3. Phase 1 is 4.30 acres and includes 37 units and 1.46 acres (33%) of open space.
4. Phase 2 is 3.35 acres and includes 16 units and 0.66 acres (20%) of open space and the playground.
5. Phase 3 is 3.61 acres and includes 17 units and 0.77 acres (21%) of open space and the pavilion.
6. Phase 4 is 3.75 acres and includes 19 units and 0.34 acres (9%) of open space.

Conditions:

1. Phase 4 shall be the last phase to be recorded, to ensure that the majority of the open space and amenities have been installed prior to recordation of this phase.

Exhibits:

1. January 2014 Phasing Plan
2. Proposed New Phasing Plan
3. Preliminary Plat
4. Open Space Exhibit
5. Final Plat "A"

Exhibit 1: January 2014 Phasing Plan

PHASE 1	4.30 ACRES	37 UNITS	OPEN SPACE:	1.46 ACRES	34%
PHASE 2	3.56 ACRES	16 UNITS		0.71 ACRES	20%
PHASE 3	7.24 ACRES	36 UNITS		0.88 ACRES	12%
TOTAL	15.1 ACRES	89 UNITS		3.05 ACRES	20%

NOTE: ALHAMBRA DR WILL BE RECORED FIRST WITH PHASE 2

PRELIMINARY PLAN
NOT FOR CONSTRUCTION

GRAPHIC SCALE
0 25 50 100 200
(IN FEET)
1 inch = 50 ft.

N

PROJECT ENGINEERING CONSULTANTS
996 West 9000 South
West Jordan, Utah, 84088
Tel. (801) 495-4240
Fax (801) 495-4244
www.pecutah.com

RIVER HEIGHTS SUBDIVISION
ALHAMBRA DRIVE & AUGUST DRIVE
SARATOGA SPRINGS, UTAH, 84045
PHASING PLAN

Sheet Number

Exhibit 2: Proposed New Phasing Plan

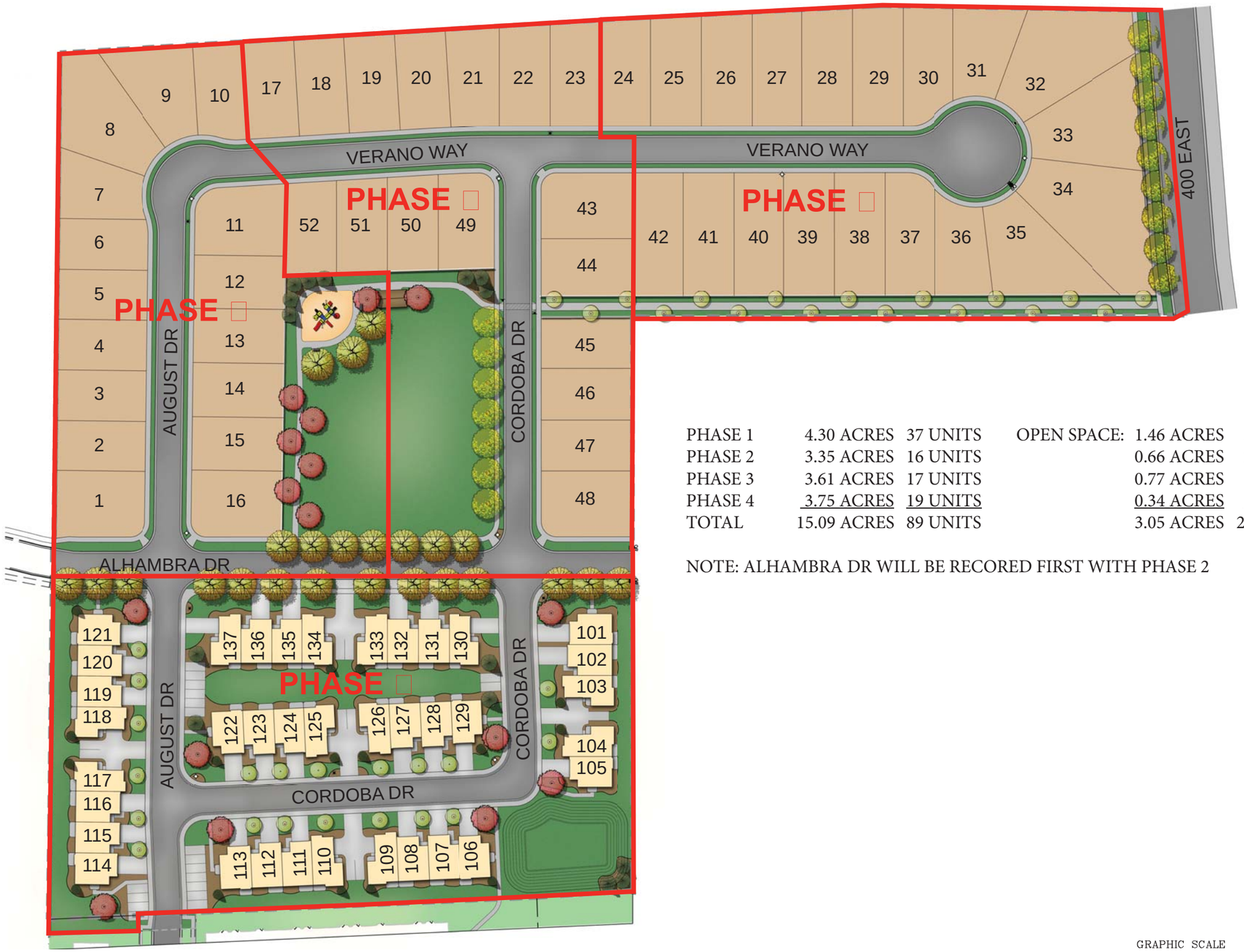

PHASE 1	4.30 ACRES	37 UNITS	OPEN SPACE:	1.46 ACRES	33%
PHASE 2	3.35 ACRES	16 UNITS		0.66 ACRES	20%
PHASE 3	3.61 ACRES	17 UNITS		0.77 ACRES	21%
PHASE 4	3.75 ACRES	19 UNITS		0.34 ACRES	9%
TOTAL	15.09 ACRES	89 UNITS		3.05 ACRES	21.4%

NOTE: ALHAMBRA DR WILL BE RECORED FIRST WITH PHASE 2

GRAPHIC SCALE

0 25 50 100 200

(IN FEET)
1 inch = 50 ft.

N

Revisions		
No.		By Date

Project Number	PM LDA
Filename	Plot Date
Designed By	Drawn By
CTC	05/09/2014
Checked By	Date
LDA	6/3/2013
Scale	Date Issued
1"=50'	05/09/2014

PROJECT ENGINEERING CONSULTANTS
986 West 9000 South
West Jordan, Utah, 84088
Tel. (801) 495-4240
Fax.(801) 495-4244
www.pec.us.com

RIVER HEIGHTS SUBDIVISION
ALHAMBRA DRIVE & AUGUST DRIVE
SARATOGA SPRINGS, UTAH, 84045
OPEN SPACE

Sheet Number

Exhibit 3: Preliminary Plat

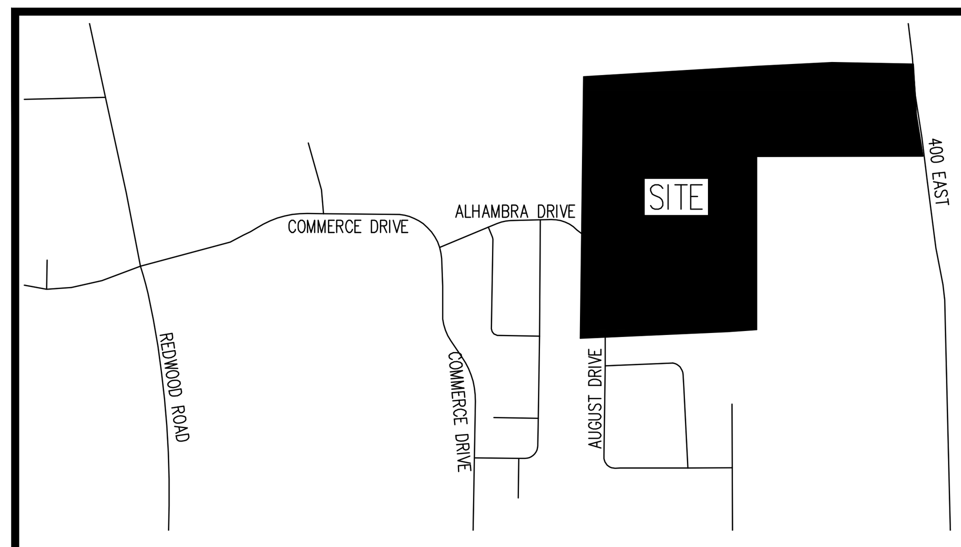

VICINITY MAP
NTS

GENERAL NOTES:

1. ALL COMMON AREA & LIMITED COMMON AREA TO BE PUBLIC UTILITY EASEMENT. IN THE TOWNHOME AREA, THIS IS EVERYTHING OUTSIDE OF THE BUILDING.
2. SEE SHEET 3 FOR PROPOSED CROSS SECTIONS.
3. SEE SHEET 2 FOR EXISTING DRAINAGE & IRRIGATION FACILITIES.
4. SEE SHEET 2 FOR DETAILED GRADING PLAN.
5. SEE SHEET 4 FOR EROSION CONTROL PLAN.
6. SEE SHEETS 2 & 3 FOR EXISTING IMPROVEMENTS AND PROPOSED CONNECTIONS AND TRANSITIONS IN ALHAMBRA DRIVE.
7. SEE SHEET 3 FOR STREET LIGHT & FIRE HYDRANT LOCATIONS.
8. SEE SHEETS 2 & 3 FOR EDGE OF ASPHALT LOCATION ON 400 EAST.

RIVER HEIGHTS

LOCATED IN THE NORTHEAST QUARTER OF SECTION 14,
TOWNSHIP 5 SOUTH, RANGE 1 WEST,
SALT LAKE BASE AND MERIDIAN
SARATOGA SPRINGS CITY, UTAH COUNTY, UTAH

GRAPHIC SCALE

60 0 30 60 120 180

(IN FEET)
1 inch = 60 ft.

TABULATIONS

TOTAL AREA:	15.03 ACRES = 100%
OPEN SPACE AREA REQUIRED/PROVIDED:	3.015 ACRES = 20%
# SINGLE FAMILY LOTS:	52
# TOWNHOME UNITS:	37
DENSITY:	5.92 UNITS/ACRE
ZONE:	R-6 & R-10
PROPOSED GARAGE PARKING SPACES:	178
PROPOSED SURFACE PARKING IN DRIVEWAYS:	178
ADDITIONAL PROPOSED PARKING STALLS:	28
PERCENTAGE OF BUILDABLE LAND:	100%
MIN. SQUARE FOOTAGE OF BUILDINGS BY FLOOR:	600 S.F. MIN.

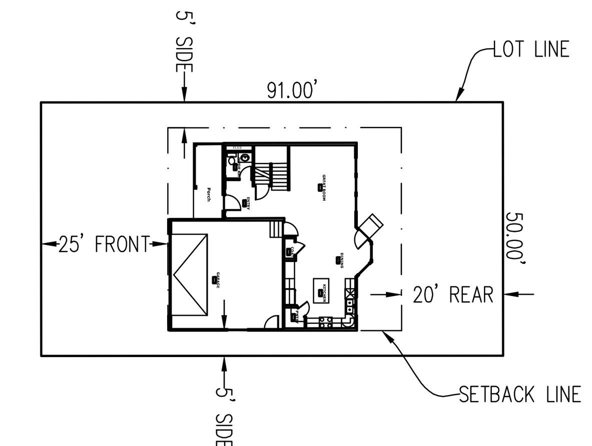

GENERIC HOME PLACEMENT PLAN

BUILDING DETAILS

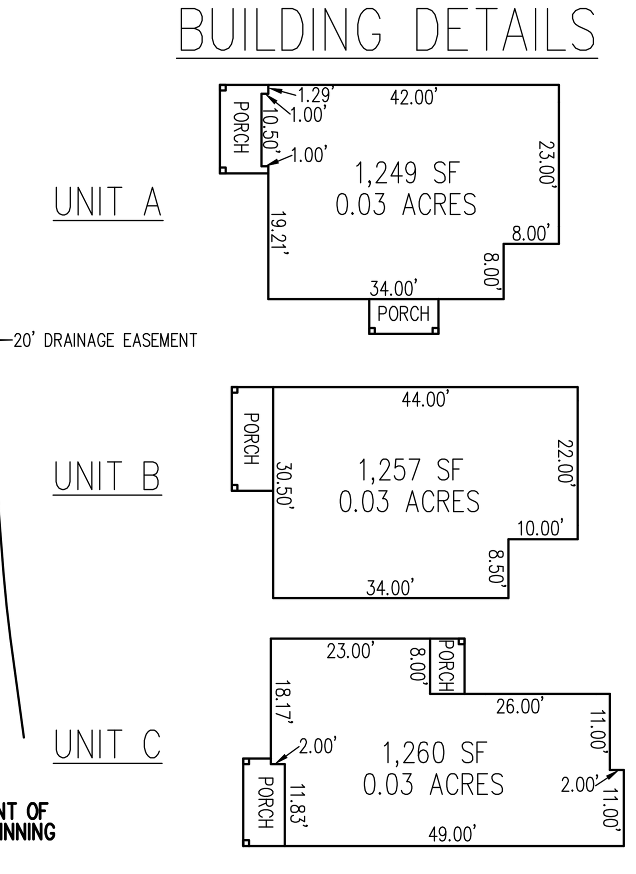

*NOTE: PORCH AREA IS LIMITED COMMON

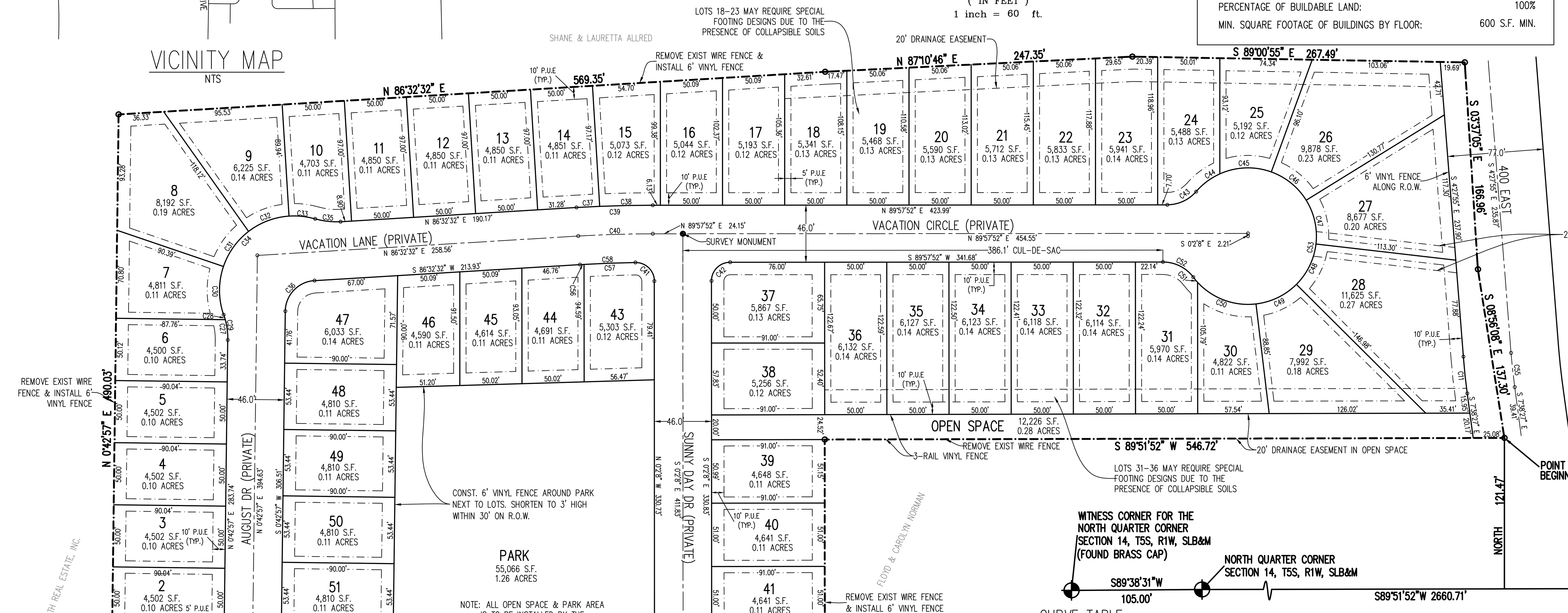

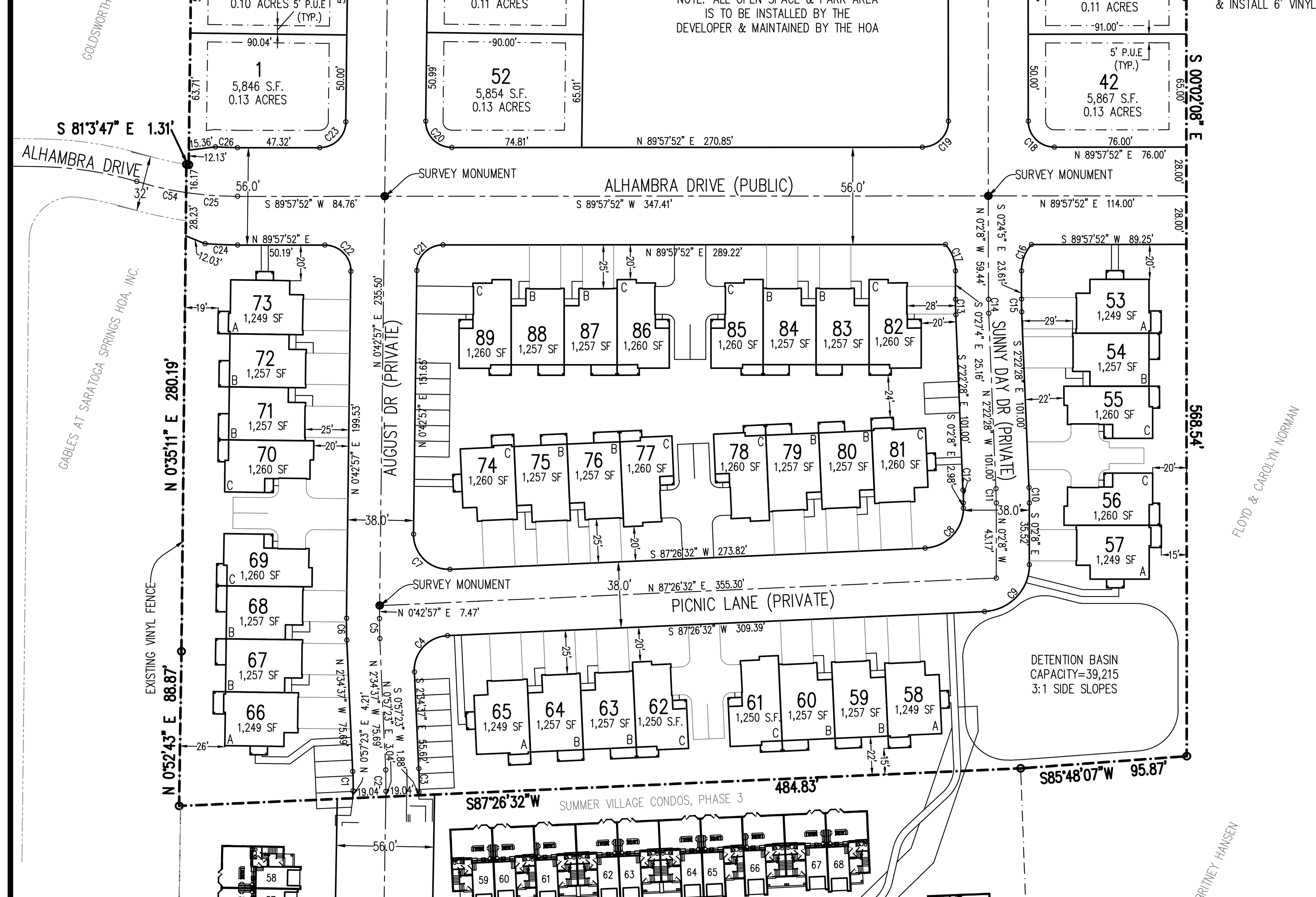

SURVEYOR'S CERTIFICATE

I, Matthew B. Judd, do hereby certify that I am a Registered Land Surveyor, and that I hold certificate No. 6913 as prescribed under laws of the State of Utah. I further certify that by authority of the owners, I have made a survey of the tract of land shown on this plat and described below, and have subdivided said tract of land into lots blocks, streets, and easements and that the same as shown on this plat. I further certify that all lots have been correctly surveyed and staked on the ground, meet frontage width and area requirements of the applicable zoning ordinances.

BOUNDARY DESCRIPTION

COMMENCING AT A POINT LOCATED SOUTH 89°51'52" WEST ALONG THE SECTION LINE 216.63 FEET AND NORTH 121.47 FEET FROM THE NORTHEAST CORNER OF SECTION 14, TOWNSHIP 5 SOUTH, RANGE 1 WEST, SALT LAKE BASE & MERIDIAN; THENCE SOUTH 89°51'52" WEST 546.72 FEET; THENCE SOUTH 00°02'08" EAST 568.54 FEET; THENCE ALONG A FENCE LINE THE FOLLOWING SIX(6) COURSES: SOUTH 85°48'07" WEST 95.87 FEET, SOUTH 87°26'32" WEST ALONG SUMMER VILLAGE SUBDIVISION 484.83 FEET, NORTH 00°52'43" EAST 88.87 FEET, NORTH 00°35'11" EAST 280.19 FEET, SOUTH 81°03'47" EAST 1.31 FEET, NORTH 00°42'57" EAST 490.03 FEET, NORTH 86°32'32" EAST 569.35 FEET, NORTH 87°10'46" EAST 247.35 FEET AND SOUTH 89°00'55" EAST 267.49 FEET; THENCE SOUTH 03°37'05" EAST 166.96 FEET; THENCE SOUTH 08°56'08" EAST 137.30 FEET TO THE POINT OF BEGINNING.

AREA = 15.03 ACRES

OWNER'S DEDICATION

Know all men by these presents that _______, the _______ undersigned owner(s) of the above described tract of land having caused same to be subdivided into lots and streets to be hereafter known as

RIVER HEIGHTS

do hereby dedicate for perpetual use of the public and/or City all parcels of land, easements, and public amenities shown on this plat as intended for public use. The owner(s) warrant and defend and save the City harmless against any easements or other encumbrance on a dedicated street which will interfere with the City's use, maintenance and operation of the street.
In witness whereof ______ have hereunto set ___________ this _____ day of _______, A.D. 20______.

OWNER'S ACKNOWLEDGMENT

STATE OF UTAH
County of Utah } S.S.

On the ______ day of ___________, A.D. 20______, personally appeared before me, the undersigned Notary Public, in and for said County of Utah in said State of Utah, the signer( ) of the above Owner's dedication, ______ in number, who duly acknowledged to me that ________________________ signed it freely and voluntarily and for the uses and purposes therein mentioned.

My commission expires: Notary Public residing at

CORPORATE ACKNOWLEDGMENT

STATE OF UTAH
County of UTAH } S.S.

On the_____day of ________, A.D. 20 _____, personally appeared before me _________and , who being by me duly sworn did say each for himself, that he, the said ____is the President and he the said_________ is the Secretary of _________Corporation, and that the within and foregoing instrument was signed in behalf of said Corporation by authority of a resolution of its board of directors and said ___________ and_________each duly acknowledge to me that said Corporation executed the same and that the seal affixed is the seal of said Corporation.

My commission expires: Notary Public residing at

ACCEPTANCE BY LEGISLATIVE BODY

The Mayor of the City of Saratoga Springs, County of Utah, approves this subdivision subject to the conditions and restrictions stated hereon, and hereby accepts the Dedication of all streets, easements, and other parcels of land intended for the public purpose of the perpetual use of the public.
This ___________, day of _______________ ,A.D. 20 ___ .

Mayor
Attest
City Recorder
(See Seal Below)

CURVE TABLE

CURVE	RADIUS	LENGTH	DELTA	CHORD	BEARING
C1	181.00	11.16	3°32'0"	11.16	N 0°48'37" W
C2	200.00	12.33	3°32'0"	12.33	N 0°48'37" W
C3	219.00	13.51	3°32'0"	13.50	N 0°48'37" W
C4	20.00	31.42	90°1'9"	28.29	N 42°25'58" E
C5	200.00	11.49	3°17'34"	11.49	N 0°55'50" W
C6	219.00	12.59	3°17'34"	12.58	N 0°55'50" W
C7	20.00	32.56	93°16'25"	29.08	S 45°55'16" E
C8	23.00	35.12	87°28'40"	31.80	N 43°42'12" E
C9	27.00	41.22	87°28'40"	37.33	N 43°42'12" E
C10	219.00	8.94	2°20'20"	8.94	N 1°12'18" W
C11	200.00	8.16	2°20'20"	8.16	N 1°12'18" W
C12	181.00	7.39	2°20'20"	7.39	N 1°12'18" W
C13	219.00	8.94	2°20'20"	8.94	N 1°12'18" W
C14	200.00	8.16	2°20'20"	8.16	N 1°12'18" W
C15	181.00	7.39	2°20'20"	7.39	N 1°12'18" W
C16	23.00	16.63	41°24'54"	16.27	N 20°40'19" E
C17	23.00	16.63	41°24'54"	16.27	N 20°44'35" W
C18	15.00	23.56	90°0'0"	21.21	N 45°2'8" W
C19	15.00	23.56	90°0'0"	21.21	S 44°57'52" W
C20	15.00	23.76	90°45'5"	21.35	N 44°39'36" W
C21	15.00	23.37	89°14'55"	21.07	S 45°20'24" W
C22	15.00	23.76	90°45'5"	21.35	N 44°39'36" W
C23	15.00	23.37	89°14'55"	21.07	S 45°20'24" W
C24	228.00	18.68	4°41'37"	18.67	N 87°41'20" W
C25	200.00	29.63	8°29'16"	29.60	N 85°47'30" W
C26	172.00	12.70	4°13'49"	12.70	N 87°55'13" W
C27	60.00	16.59	15°50'39"	16.54	N 7°12'23" W
C28	60.00	4.09	3°54'26"	4.09	N 17°4'55" W
C29	60.00	20.68	19°45'5"	20.58	N 9°9'36" W
C30	60.00	39.60	37°48'46"	38.88	N 0°7'45" W
C31	60.00	35.13	33°32'53"	34.63	N 35°33'4" E
C32	60.00	35.28	33°41'25"	34.77	N 69°10'13" E
C33	60.00	21.24	20°16'41"	21.12	S 83°50'44" E
C34	60.00	131.24	125°19'45"	106.60	N 43°37'44" E
C35	60.00	20.68	19°45'5"	20.58	S 83°34'56" E
C36	25.00	37.45	85°49'35"	34.04	N 43°37'44" E
C37	1028.00	18.72	1°2'37"	18.72	N 87°3'50" E
C38	1028.00	42.68	2°22'43"	42.68	N 88°46'30" E
C39	1028.00	61.40	3°25'20"	61.39	N 88°15'12" E
C40	1005.00	60.03	3°25'20"	60.02	N 88°15'12" E
C41	15.00	23.78	90°49'15"	21.36	S 45°26'45" E
C42	15.00	23.56	90°0'0"	21.21	S 44°57'52" W
C43	30.50	26.27	49°20'33"	25.46	N 65°17'35" E
C44	55.00	24.11	25°7'13"	23.92	N 53°10'55" E
C45	55.00	42.49	44°15'31"	41.44	N 87°52'17" E
C46	55.00	36.76	38°17'41"	36.08	S 50°51'6" E
C47	55.00	36.76	38°17'41"	36.08	S 12°33'25" E
C48	55.00	36.76	38°17'41"	36.08	S 25°44'17" W
C49	55.00	36.76	38°17'41"	36.08	S 64°1'58" W
C50	55.00	52.11	54°16'59"	50.18	N 69°40'41" W
C51	55.00	5.41	5°38'11"	5.41	N 39°43'6" W
C52	30.50	28.29	53°8'7"	27.28	N 63°28'4" W
C53	55.00	271.16	282°28'40"	68.87	S 1°51'39" W
C54	200.00	29.13	8°20'44"	29.11	N 77°22'30" W
C55	500.00	27.71	3°10'32"	27.71	S 6°3'11" E
C56	982.00	3.33	0°11'39"	3.33	N 86°38'21" E
C57	982.00	41.26	2°24'26"	41.25	N 87°56'24" E
C58	982.00	44.59	2°36'5"	44.58	N 87°50'34" E

NORTH

NOTES:

–THE INSTALLATION OF IMPROVEMENTS SHALL CONFORM TO ALL CITY RULES, ORDINANCES, REQUIREMENTS, STANDARDS, AND POLICIES REGARDING THE DEVELOPMENT OF THIS PROPERTY.
–PRIOR TO BUILDING PERMITS BEING ISSUED, SOIL TESTING STUDIES MAY BE REQUIRED ON EACH LOT AS DETERMINED BY THE CITY BUILDING OFFICIAL.
–PLAT MAY BE SUBJECT TO A MASTER DEVELOPMENT AGREEMENT, DEVELOPMENT AGREEMENT, SUBDIVISION AGREEMENT, OR SITE PLAN AGREEMENT. SEE CITY RECORDER FOR MORE INFORMATION.
–BUILDING PERMITS WILL NOT BE ISSUED UNTIL ALL IMPROVEMENTS HAVE BEEN INSTALLED AND ACCEPTED BY THE CITY IN WRITING; ALL IMPROVEMENTS CURRENTLY MEET CITY STANDARDS; AND BONDS ARE POSTER BY THE CURRENT OWNER OF THE PROJECT PURSUANT TO CITY CODE.
–ALL BONDS AND BOND AGREEMENTS ARE BETWEEN THE CITY, DEVELOPER/OWNER AND FINANCIAL INSTITUTION. NO OTHER PARTY, INCLUDING UNIT OR LOT OWNERS, SHALL BE DEEMED A THIRD–PARTY BENEFICIARY OR HAVE ANY RIGHTS INCLUDING THE RIGHT TO BRING ANY ACTION UNDER ANY BOND OR AGREEMENT.
–THE OWNER OF THIS SUBDIVISION AND ANY SUCCESSORS AND ASSIGNS ARE RESPONSIBLE FOR ENSURING THAT IMPACT AND CONNECTION FEES ARE PAID AND WATER RIGHTS ARE SECURED FOR EACH INDIVIDUAL LOT. NO BUILDING PERMITS SHALL BE ISSUED FIR ANY LOT IN THIS SUBDIVISION UNTIL ALL IMPACT AND CONNECTION FEES. AT THE RATES IN EFFECT WHEN APPLYING FOR THE PERMIT, ARE PAID IN FULL AND WATER RIGHTS SECURED AS SPECIFIED BY CURRENT CITY ORDINANCES AND FEE SCHEDULES.
–ALL OPEN SPACE AND TRAIL IMPROVEMENTS LOCATED HEREIN ARE TO BE INSTALLED BY OWNER AND MAINTAINED BY A HOMEOWNERS ASSOCIATION UNLESS SPECIFIES OTHERWISE ON EACH IMPROVEMENT.
–ANY REFERENCE HEREIN TO OWNERS, DEVELOPERS, OR CONTRACTORS SHALL APPLY TO SUCCESSORS, AGENTS, AND ASSIGNS.
–IF SUBDIVISION HAS PRIVATE STREETS, PLAT MUST DESIGNATE STREET AS "PRIVATE" AND INCLUDE STATEMENT "NO CITY MAINTENANCE IS PROVIDED ON PRIVATE STREETS"
–IF CONDO OR HOA ASSOCIATION IS INVOLVED PLAT MUST INCLUDE STATEMENT "LOTS/UNITS ARE SUBJECT TO ASSOCIATION BYLAWS, ARTICLES OR INCORPORATION AND CC&R'S"

SHEET INDEX

1. PRELIMINARY PLAT
2. GRADING & DRAINAGE PLAN
3. UTILITY LAYOUT PLAN
4. EROSION CONTROL PLAN

LEHI CITY POST OFFICE

Approved by Post Office Representative on this ____ day of__________, A.D. 20___

CITY ENGINEER

RIVER HEIGHTS

LOCATED IN THE NORTHEAST QUARTER OF SECTION 14,
TOWNSHIP 5 SOUTH, RANGE 1 WEST,
SALT LAKE BASE AND MERIDIAN
SARATOGA SPRINGS CITY, UTAH COUNTY, UTAH

Developer: Bach Homes
11650 S. State St. Suite
300Draper, Utah 84020
Surveyor: JUDCO
473 West Lakeview Rd.
Lindon, UT 84042
(801) 367–7409
Engineer: Excel Engineering, Inc.
12 West 100 North, #201
American Fork, UT 84003
(801) 756–4504

PUBLIC UTILITIES APPROVALS — DATE

QUESTAR ____________ ____
ROCKY MOUNTAIN POWER ____________ ____
CENTURY LINK ____________ ____
COMCAST CABLE ____________ ____

FIRE CHIEF APPROVAL

Approved this ____ day of__________, A.D. 20__
By the Fire Chief

CITY FIRE CHIEF

PLANNING COMMISSION APPROVAL

Approved this ____ day of__________, A.D. 20__
By the Planning Commission..

CHAIRMAN, PLANNING COMMISSION

SARATOGA SPRINGS ENGINEER APPROVAL

Approved this ____ day of__________, A.D. 20__
By the City Engineer.

CITY ENGINEER

SARATOGA SPRINGS ATTORNEY

Approval as to form this _____day of _______, A.D. 20__
By the City Attorney.

SARATOGA SPRINGS ATTORNEY

SURVEYORS SEAL | NOTARY PUBLIC SEAL | CITY ENGINEERS SEAL | CLERK-RECORDER SEAL

EXHIBIT 4: OPEN SPACE EXHIBIT

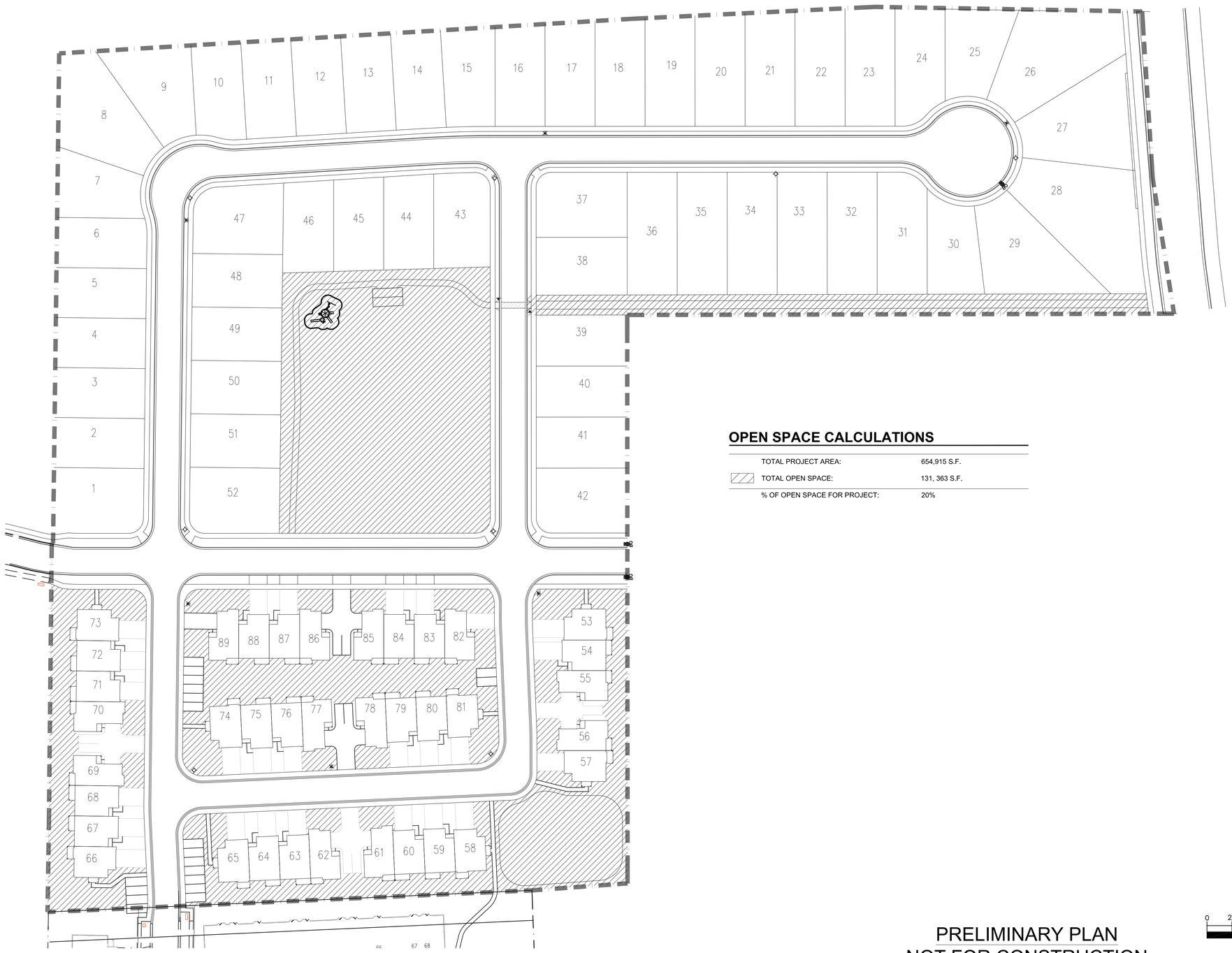

OPEN SPACE CALCULATIONS

TOTAL PROJECT AREA:	654,915 S.F.
TOTAL OPEN SPACE:	131, 363 S.F.
% OF OPEN SPACE FOR PROJECT:	20%

PRELIMINARY PLAN
NOT FOR CONSTRUCTION

GRAPHIC SCALE
0 25 50 100 200
(IN FEET)
1 inch = 50 ft.

N

No.	Revisions	By	Date

Project Number	PM
	LDA
Filename	Plot Date
Designed By	Drawn By
Checked By	Date
LDA	
Scale	Date Issued
1" = 20'	

PROJECT ENGINEERING CONSULTANTS
986 West 9000 South
West Jordan, Utah, 84088
Tel. (801) 495-4240
Fax.(801) 495-4244
www.pecutah.com

RIVER HEIGHTS SUBDIVISION
ALHAMBRA DRIVE & AUGUST DRIVE
SARATOGA SPRINGS, UTAH, 84045
OPEN SPACE

Sheet Number
– –

EXHIBIT 5: FINAL PLAT "A"

RIVER HEIGHTS PLAT "A"

LOCATED IN THE NORTHEAST QUARTER OF SECTION 14,
TOWNSHIP 5 SOUTH, RANGE 1 WEST,
SALT LAKE BASE AND MERIDIAN
SARATOGA SPRINGS CITY, UTAH COUNTY, UTAH

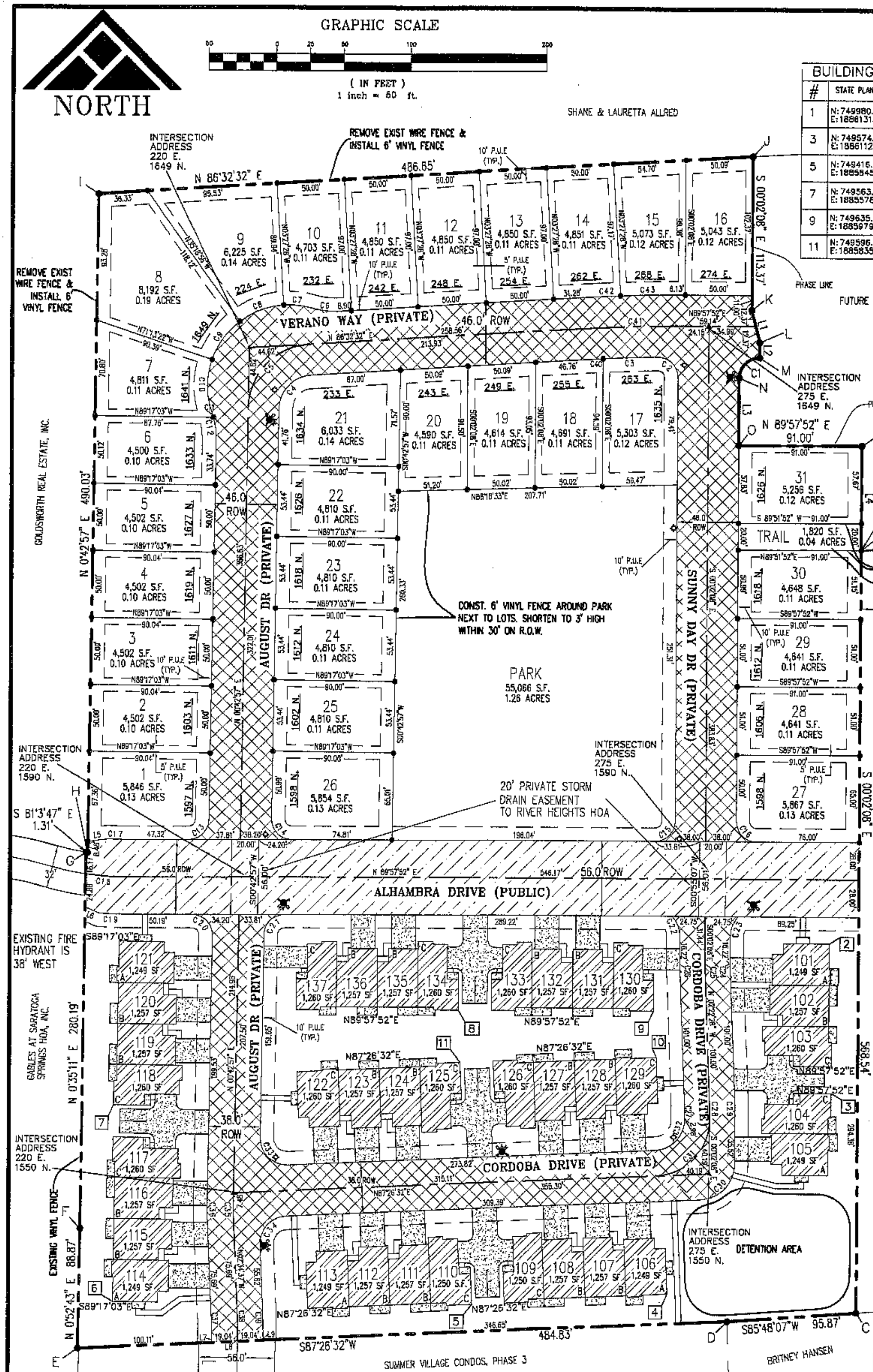

BUILDING COORDINATES

#	STATE PLANE	#	STATE PLANE
1	N:749980.30 E:1886131.82	2	N:749686.22 E:1886110.46
3	N:749574.75 E:1886112.53	4	N:749424.90 E:1885991.23
5	N:749416.39 E:1885845.50	6	N:749417.94 E:1885578.74
7	N:749563.92 E:1885578.57	8	N:749635.06 E:1885834.44
9	N:749635.15 E:1885979.40	10	N:749600.60 E:1885981.82
11	N:749596.09 E:1885835.91		

GENERAL NOTES:

1. ALL COMMON AREA & LIMITED COMMON AREA TO BE PUBLIC UTILITY EASEMENT. IN THE TOWNHOME AREA, THIS IS EVERYTHING OUTSIDE OF THE BUILDING.
2. ALL PRIVATE ROADS AND COMMON SPACES ARE TO BE UTILITY EASEMENTS TO THE CITY OF SARATOGA SPRINGS FOR DRAINAGE, WATER, IRRIGATION AND SEWER.
3. ALL AREA WITHIN THE SINGLE-FAMILY LOTS IS PRIVATE AREA.

NOTES:

-THE INSTALLATION OF IMPROVEMENTS SHALL CONFORM TO ALL CITY RULES, ORDINANCES, REQUIREMENTS, STANDARDS, AND POLICIES REGARDING THE DEVELOPMENT OF THIS PROPERTY.
-PRIOR TO BUILDING PERMITS BEING ISSUED, SOIL TESTING STUDIES MAY BE REQUIRED ON EACH LOT AS DETERMINED BY THE CITY BUILDING OFFICIAL. PLEASE SEE THE SOILS REPORT FOR PROBLEMATIC SOIL AREAS.
-PLAT MAY BE SUBJECT TO A MASTER DEVELOPMENT AGREEMENT, DEVELOPMENT AGREEMENT, SUBDIVISION AGREEMENT, OR SITE PLAN AGREEMENT. SEE CITY RECORDER FOR MORE INFORMATION.
-BUILDING PERMITS WILL NOT BE ISSUED UNTIL ALL IMPROVEMENTS HAVE BEEN INSTALLED AND ACCEPTED BY THE CITY IN WRITING; ALL IMPROVEMENTS CURRENTLY MEET CITY STANDARDS; AND BONDS ARE POSTED BY THE CURRENT OWNER OF THE PROJECT PURSUANT TO CITY CODE.
-ALL BONDS AND BOND AGREEMENTS ARE BETWEEN THE CITY, DEVELOPER/OWNER AND FINANCIAL INSTITUTION. NO OTHER PARTY, INCLUDING UNIT OR LOT OWNERS, SHALL BE DEEMED A THIRD-PARTY BENEFICIARY OR HAVE ANY RIGHTS INCLUDING THE RIGHT TO BRING ANY ACTION UNDER ANY BOND OR BOND AGREEMENT.
-THE OWNER OF THIS SUBDIVISION AND ANY SUCCESSORS AND ASSIGNS ARE RESPONSIBLE FOR ENSURING THAT IMPACT AND CONNECTION FEES ARE PAID AND WATER RIGHTS ARE SECURED FOR EACH INDIVIDUAL LOT. NO BUILDING PERMITS SHALL BE ISSUED FOR ANY LOT IN THIS SUBDIVISION UNTIL ALL IMPACT AND CONNECTION FEES, AT THE RATES IN EFFECT WHEN APPLYING FOR THE BUILDING PERMIT, ARE PAID IN FULL AND WATER RIGHTS SECURED AS SPECIFIED BY CURRENT CITY ORDINANCES AND FEE SCHEDULES.
-ALL OPEN SPACE AND TRAIL IMPROVEMENTS LOCATED HEREIN ARE TO BE INSTALLED BY OWNER AND MAINTAINED BY A HOMEOWNERS ASSOCIATION UNLESS SPECIFIED OTHERWISE ON EACH IMPROVEMENT.
-ANY REFERENCE HEREIN TO OWNERS, DEVELOPERS, OR CONTRACTORS SHALL APPLY TO SUCCESSORS, AGENTS, AND ASSIGNS.
-IF SUBDIVISION HAS PRIVATE STREETS, PLAT MUST DESIGNATE STREETS AS "PRIVATE" AND INCLUDE STATEMENT "NO CITY MAINTENANCE IS PROVIDED ON PRIVATE STREETS"
-IF CONDO OR HOA ASSOCIATION IS INVOLVED, PLAT MUST INCLUDE STATEMENT "LOTS/UNITS ARE SUBJECT TO ASSOCIATION BYLAWS, ARTICLES OF INCORPORATION AND CC&R'S"

LINE TABLE

LINE	BEARING	LENGTH
L1	S14°06'25"E	24.74'
L2	S00°02'08"E	11.00'
L3	S00°02'08"E	50.00'
L4	S00°02'08"E	77.67'
L5	S83°04'18"W	15.36'
L6	S67°49'00"E	12.03'
L7	N00°57'23"E	4.21'
L8	N00°57'23"E	3.04'
L9	N00°57'23"E	1.88'

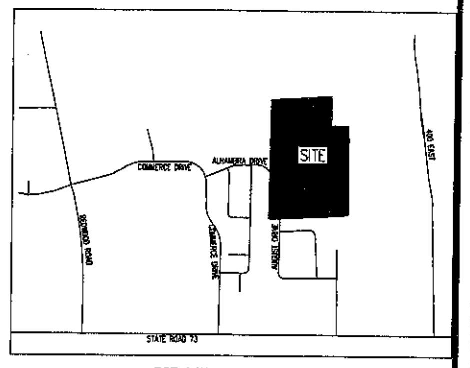

VICINITY MAP
NOT TO SCALE

STATE PLANE COORDINATES
(SCALE FACTOR = .99972)

A	N:749880.66 E:1886895.03	G	N:749752.21 E:1885556.61	M	N:750122.89 E:1886055.75
B	N:749980.30 E:1886131.82	H	N:749752.01 E:1885557.90	N	N:750107.88 E:1886040.77
C	N:749411.93 E:1886132.18	I	N:750241.87 E:1885564.02	O	N:750057.90 E:1886040.80
D	N:749404.91 E:1886036.59	J	N:750271.21 E:1886049.65	P	N:750057.95 E:1886131.77
E	N:749383.32 E:1885552.31	K	N:750157.87 E:1886049.72		
F	N:749472.11 E:1885553.74	L	N:750133.88 E:1886055.75		

CURVE TABLE

CURVE	LENGTH	RADIUS	TANGENT	CHORD BEARING	CHORD	DELTA
C1	23.56'	15.00'	15.00'	S44°57'52"W	21.21'	90°00'00"
C2	23.78'	15.00'	15.22'	N45°26'45"W	21.36'	90°49'15"
C3	41.26'	982.00'	20.63'	S87°56'24"W	41.25'	2°24'26"
C4	37.45'	25.00'	23.24'	S43°37'44"W	34.04'	85°49'35"
C5	71.90'	48.00'	44.62'	S43°37'44"W	65.37'	85°49'35"
C6	20.68'	60.00'	10.45'	S83°34'56"E	20.58'	19°45'05"
C7	21.24'	60.00'	10.73'	N83°50'44"W	21.12'	20°16'41"
C8	35.28'	60.00'	18.17'	S69°10'13"W	34.77'	33°41'25"
C9	35.13'	60.00'	18.09'	S35°33'04"W	34.63'	33°32'53"
C10	39.60'	60.00'	20.55'	S00°07'45"E	38.88'	37°48'46"
C11	4.09'	60.00'	2.05'	N17°04'55"W	4.09'	3°54'26"
C12	16.59'	60.00'	8.35'	N07°12'23"W	16.54'	15°50'39"
C13	23.37'	15.00'	14.80'	N45°20'24"E	21.07'	89°14'55"
C14	23.76'	15.00'	15.20'	S44°39'36"E	21.35'	90°45'05"
C15	23.56'	15.00'	15.00'	N44°57'52"E	21.21'	90°00'00"
C16	23.56'	15.00'	15.00'	S45°02'08"E	21.21'	90°00'00"
C17	12.70'	172.00'	6.35'	S87°55'13"E	12.70'	4°13'49"
C18	29.63'	200.00'	14.84'	S85°47'30"E	29.60'	8°29'16"
C19	18.66'	228.00'	9.34'	S87°44'20"E	18.67'	4°41'37"
C20	23.76'	15.00'	15.20'	N44°39'36"W	21.35'	90°45'05"
C21	23.37'	15.00'	14.80'	S45°20'24"W	21.07'	89°14'55"
C22	16.63'	23.00'	8.69'	N20°44'35"W	16.27'	41°24'54"
C23	16.63'	23.00'	8.69'	S20°40'19"W	16.27'	41°24'54"
C24	7.39'	181.00'	3.69'	S01°12'18"E	7.39'	2°20'20"
C25	8.16'	200.00'	4.08'	S01°12'18"E	8.16'	2°20'20"
C26	8.94'	219.00'	4.47'	S01°12'18"E	8.94'	2°20'20"
C27	7.39'	181.00'	3.69'	N01°12'18"W	7.39'	2°20'20"
C28	8.16'	200.00'	4.08'	N01°12'18"W	8.16'	2°20'20"
C29	8.94'	219.00'	4.47'	N01°12'18"W	8.94'	2°20'20"
C30	41.22'	27.00'	25.84'	N43°42'12"E	37.33'	87°28'40"
C31	64.12'	42.00'	40.19'	N43°42'12"E	58.08'	87°28'40"
C32	35.12'	23.00'	22.01'	N43°42'12"E	31.80'	87°28'40"
C33	32.56'	20.00'	21.18'	S45°56'16"E	29.08'	93°16'25"
C34	31.42'	20.00'	20.01'	S42°25'58"W	28.29'	90°01'09"
C35	11.49'	200.00'	5.75'	S00°55'50"E	11.49'	3°17'34"
C36	12.59'	219.00'	6.29'	S00°55'50"E	12.58'	3°17'34"
C37	11.16'	181.00'	5.58'	N00°48'37"W	11.16'	3°32'00"
C38	12.33'	200.00'	6.17'	N00°48'37"W	12.33'	3°32'00"
C39	13.51'	219.00'	6.75'	N00°48'37"W	13.50'	3°32'00"
C40	3.33'	982.00'	1.66'	S86°38'21"W	3.33'	0°11'39"
C41	60.03'	1005.00'	30.02'	S88°15'12"W	60.02'	3°25'20"
C42	18.72'	1028.00'	9.36'	S87°03'50"W	18.72'	1°02'37"
C43	42.68'	1028.00'	21.34'	S88°46'30"W	42.68'	2°22'43"

BUILDING TYPICALS
NOT TO SCALE

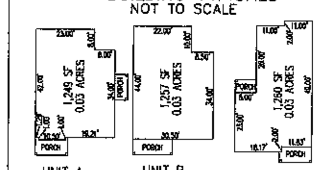

*NOTE: PORCH AREA IS LIMITED COMMON
NOTE: ALL BUILDING LINES ARE PARALLEL TO OR PERPENDICULAR TO THE BUILDING BEARINGS AS SHOWN HEREON FOR EACH BUILDING

TABULATIONS

TOTAL AREA:	10.95 ACRES = 100%
OPEN SPACE AREA REQUIRED	2.19 ACRES = 20.00%
OPEN SPACE PROVIDED:	2.78 ACRES = 25.39%
# SINGLE FAMILY LOTS:	31
# TOWNHOME UNITS:	37
DENSITY:	6.21 UNITS/ACRE
ZONE:	R-6 & R-10
PROPOSED GARAGE PARKING SPACES:	136
PROPOSED SURFACE PARKING IN DRIVEWAYS:	136
ADDITIONAL PROPOSED PARKING STALLS:	22
PERCENTAGE OF BUILDABLE LAND:	100%
MIN. SQUARE FOOTAGE OF BUILDINGS BY FLOOR:	600 S.F. MIN.

TOWNHOME ADDRESSES

UNIT #	NUMBER	STREET
101	1584 N.	CORDOBA DRIVE
102	1578 N.	CORDOBA DRIVE
103	1574 N.	CORDOBA DRIVE
104	1564 N.	CORDOBA DRIVE
105	1554 N.	CORDOBA DRIVE
106	267 E.	CORDOBA DRIVE
107	263 E.	CORDOBA DRIVE
108	257 E.	CORDOBA DRIVE
109	251 E.	CORDOBA DRIVE
110	241 E.	CORDOBA DRIVE
111	237 E.	CORDOBA DRIVE
112	233 E.	CORDOBA DRIVE
113	227 E.	CORDOBA DRIVE
114	1547 N.	AUGUST DRIVE
115	1553 N.	AUGUST DRIVE
116	1559 N.	AUGUST DRIVE
117	1563 N.	AUGUST DRIVE
118	1569 N.	AUGUST DRIVE
119	1573 N.	AUGUST DRIVE
120	1579 N.	AUGUST DRIVE
121	1583 N.	AUGUST DRIVE
122	228 E.	CORDOBA DRIVE
123	234 E.	CORDOBA DRIVE
124	238 E.	CORDOBA DRIVE
125	244 E.	CORDOBA DRIVE
126	252 E.	CORDOBA DRIVE
127	258 E.	CORDOBA DRIVE
128	264 E.	CORDOBA DRIVE
129	268 E.	CORDOBA DRIVE
130	269 E.	ALHAMBRA DRIVE
131	263 E.	ALHAMBRA DRIVE
132	259 E.	ALHAMBRA DRIVE
133	253 E.	ALHAMBRA DRIVE
134	243 E.	ALHAMBRA DRIVE
135	239 E.	ALHAMBRA DRIVE
136	233 E.	ALHAMBRA DRIVE
137	227 E.	ALHAMBRA DRIVE

BUILDING SET-BACKS & PUE
INTERIOR LOT

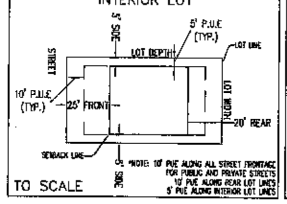

BUILDING SET-BACKS & PUE
CORNER LOT

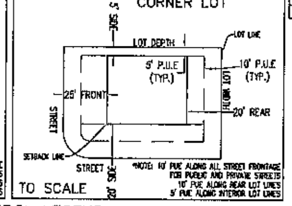

BUILDING SET-BACKS & PUE
KNUCKLE LOT

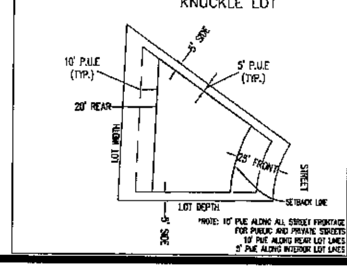

DRAINAGE EASEMENT AREA NOTE:
DRAINAGE EASEMENT AREAS ARE PERPETUAL, NON-EXCLUSIVE, MUTUAL CROSS DRAINAGE EASEMENTS FOR PURPOSES OF STORM WATER CAPTURE AND CONVEYANCE ON, OVER, UPON, AND ACCROSS THE AREAS DELINEATED AS DRAINAGE EASEMENTS. EACH LOT ENCUMBERED BY A DRAINAGE EASEMENT SHALL, AT ITS SOLE COST AND EXPENSE, MAINTAIN AND KEEP ALL ABOVE AND BELOW GRADE INFRASTRUCTURE AND APPURTENANCES IN REASONABLE CONDITION AND STATE OF REPAIR. NO OBSTRUCTIONS OR CHANGES IN GRADE SHALL BE LOCATED WITHIN THE EASEMENT AREA THAT WILL IMPEDE, DIVERT, OR CAUSE THE RUNOFF TO HAVE AN ADVERSE EFFECT ON ADJOINING PROPERTY.

SYMBOL LEGEND
- PRIVATE AREA (TOWNHOME AREA) ALL INDIVIDUAL LOTS ARE PRIVATE (NO HATCH)
- LIMITED COMMON AREA
- COMMON AREA (INCLUDES ALL AREA NOT DEFINED AS PRIVATE OR LIMITED COMMON)
- PRIVATE STREET
- PUBLIC STREET
- SET NEW REBAR & CAP (OR FOUND EXISTING REBAR & CAP)
- UTAH COUNTY MONUMENT
- 'A' STATE PLANE COORDINATE
- BUILDING COORDINATE
- PROPOSED STREET MONUMENT
- PROPOSED FIRE HYDRANT
- PROPOSED STREET LIGHT

SURVEYOR'S CERTIFICATE

I, Matthew B. Judd, do hereby certify that I am a Registered Land Surveyor, and that I hold certificate No. 6913 as prescribed under laws of the State of Utah. I further certify that by authority of the owners, I have made a survey of the tract of land shown on this plat and described below, and have subdivided said tract of land into lots blocks, streets, and easements and that the same as shown on this plat. I further certify that all lots have been correctly surveyed and staked on the ground, meet frontage width and area requirements of the applicable zoning ordinances.

BOUNDARY DESCRIPTION

A PARCEL OF LAND SITUATED IN THE NORTHEAST QUARTER OF SECTION 14, TOWNSHIP 5 SOUTH, RANGE 1 WEST, SALT LAKE BASE AND MERIDIAN, SAID PARCEL BEING MORE PARTICULARLY DESCRIBED AS FOLLOWS:

BEGINNING AT A POINT LOCATED SOUTH 89°51'52" WEST ALONG THE SECTION LINE 216.63 FEET, NORTH 121.47 FEET AND SOUTH 89°51'52" WEST 546.72 FEET FROM THE NORTHEAST CORNER OF SECTION 14, TOWNSHIP 5 SOUTH, RANGE 1 WEST, SALT LAKE BASE & MERIDIAN; THENCE SOUTH 00°02'08" EAST 568.54 FEET; THENCE ALONG A FENCE LINE THE FOLLOWING SIX(6) COURSES: SOUTH 85°48'07" WEST 95.87 FEET, SOUTH 87°26'32" WEST ALONG SUMMER VILLAGE SUBDIVISION 484.83 FEET, NORTH 00°52'43" EAST 88.87 FEET, NORTH 00°35'11" EAST 280.19 FEET, SOUTH 81°03'47" EAST 1.31 FEET, NORTH 00°42'57" EAST 490.03 FEET, NORTH 86°32'32" EAST 486.65 FEET, THENCE SOUTH 00°02'08" EAST 113.37 FEET; THENCE SOUTH 14°06'25" EAST 24.74 FEET; THENCE SOUTH 00°02'08" EAST 11.00 FEET; THENCE ALONG THE ARC OF A 15.00-FOOT RADIUS CURVE TO THE LEFT 23.56 FEET (CHORD BEARS S 44°57'52" W 21.21 FEET);; THENCE SOUTH 00°02'08" EAST 50.00 FEET; THENCE NORTH 89°57'52" EAST 91.00 FEET; THENCE SOUTH 00°02'08" EAST 77.67 FEET TO THE POINT OF BEGINNING.

AREA = 10.9462 ACRES
SINGLE FAMILY LOTS = 31
TOWNHOMES = 37

OWNER'S DEDICATION

Know all men by these presents that ______, the ______ undersigned owner(s) of the above described tract of land having caused same to be subdivided into lots and streets to be hereafter known as

RIVER HEIGHTS PLAT "A"

do hereby dedicate for perpetual use of the public and/or City all parcels of land, easements, and public amenities shown on this plat as intended for public use. The owner(s) warrant and defend and save the City harmless against any easements or other encumbrance on a dedicated street which will interfere with the City's use, maintenance and operation of the street.
In witness whereof _____ have hereunto set __________ this _____ day of _______, A.D. 20______.

OWNER'S ACKNOWLEDGMENT

STATE OF UTAH } S.S.
County of Utah

On the _____ day of __________, A.D. 20_____, personally appeared before me, the undersigned Notary Public, in and for said County of Utah in said State of Utah, the signer( ) of the above Owner's dedication, ______ in number, who duly acknowledged to me that ________________ signed it freely and voluntarily and for the uses and purposes therein mentioned.

My commission expires: Notary Public residing at

CORPORATE ACKNOWLEDGMENT

STATE OF UTAH } S.S.
County of UTAH

On the_____day of _______, A.D. 20 ____, personally appeared before me ________and , who being by me duly sworn did say each for himself, that he, the said ___is the President and he the said________ is the Secretary of ________Corporation, and that the within and foregoing instrument was signed in behalf of said Corporation by authority of a resolution of its board of directors and said _________ and_________each duly acknowledge to me that said Corporation executed the same and that the seal affixed is the seal of said Corporation.

My commission expires: Notary Public residing at

ACCEPTANCE BY LEGISLATIVE BODY

The Mayor of the City of Saratoga Springs, County of Utah, approves this subdivision subject to the conditions and restrictions stated hereon, and hereby accepts the Dedication of all streets, easements, and other parcels of land intended for the public purpose of the perpetual use of the public.
This __________, day of _____________ ,A.D. 20 __ .

Mayor Attest City Recorder (See Seal Below)

SARATOGA SPRINGS ATTORNEY

Approval as to form this _____day of _______, A.D. 20
By the City Attorney.

SARATOGA SPRINGS ATTORNEY

RIVER HEIGHTS
PLAT "A"

LOCATED IN THE NORTHEAST QUARTER OF SECTION 14,
TOWNSHIP 5 SOUTH, RANGE 1 WEST,
SALT LAKE BASE AND MERIDIAN
SARATOGA SPRINGS CITY, UTAH COUNTY, UTAH

SARATOGA SPRINGS——UTAH COUNTY, UTAH
SCALE: 1" = 50 FEET

SURVEYOR'S SEAL	NOTARY PUBLIC SEAL	CITY-COUNTY ENGINEER SEAL	CLERK-RECORDER SEAL

JUDCO
PLANNING.SURVEYING.ENGINEERING
473 WEST LAKEVIEW ROAD
LINDON, UTAH 84042
(801) 367-7409
judco1@gmail.com

PUBLIC UTILITIES APPROVALS

	DATE
QUESTAR	______
ROCKY MOUNTAIN POWER	______
CENTURY LINK	______
COMCAST CABLE	______

FIRE CHIEF APPROVAL

Approved this ____ day of________, A.D. 20
By the Fire Chief

CITY FIRE CHIEF

PLANNING COMMISSION APPROVAL

Approved this ____ day of__________, A.D. 20
By the Planning Commission..

CHAIRMAN, PLANNING COMMISSION

SARATOGA SPRINGS ENGINEER APPROVAL

Approved this ____ day of__________, A.D. 20
By the City Engineer.

CITY ENGINEER

LEHI CITY POST OFFICE

Approved by Post Office Representative on this ____ day of__________, A.D. 20

REPRESENTATIVE

RECEIVED JUL 02 2013

City Council

Memorandum

Author: Sarah Carroll
Date: June 17, 2014
Re: Stillwater Phase 6, Final Plat Phasing Plan

Applicant/Owner:	Land Solutions Partners – Russell Wilson
Location:	Approximately 2700 South Stillwater Drive
Parcel Number(s) & Size:	590120114, approximately 13.47 acres
Parcel Zoning:	R-3, PUD
Adjacent Zoning:	R-3 and R-3 PUD
Land Use Designation:	Low Density Residential
Current Use of Parcel:	Undeveloped/Vacant
Adjacent Uses:	Single Family Residential, HOA clubhouse, church
Previous Approvals:	Stillwater MDA approved 2-24-2004 (expires 1-20-2015) MDA revised for church site 6-21-11 Amended Stillwater MDA approved 11-12-13 (expires 1-20-2016) Phase 6 Preliminary Plat approved 3-25-14 Phase 6 Final Plat approval 4-1-14
Land Use Authority:	City Council

A. Request:
This is a request for approval of a revised phasing plan for Stillwater Phase 6.

B. Background:
The Preliminary and Final plat approvals for Stillwater phase 6 anticipated two phases of development and outlined the open space and amenities required for those two phases. The applicant would like to break the project into additional phases and understands that the open space and amenities are required to be developed proportionately to the number of lots in each phase. The overall project includes 46 lots, 2.85 total acres of off-site and on-site open space, a $20,000 contribution to the HOA towards the swimming pool and hot tub, and a payment in lieu of open space fee of $35,902.49.

The previous approval granted approval of two phases, as follows:

<u>6 lots along Stillwater Drive:</u>
Pool fee: $1,916
Fee in lieu of open space: $3,343.66
Developed open space: 0.27 acres

Sarah Carroll, Senior Planner
scarroll@saratogaspringscity.com
1307 North Commerce Drive, Suite 200 • Saratoga Springs, Utah 84045
801-766-9793 x 106 • 801-766-9794 fax

Remaining 40 lots:
Pool fee: $18,084
Fee in lieu of open space: $31,558.83
Developed open space: 2.58 acres

The current proposal is for four phases as broken down below. While the fees will be paid in proportionate amounts, the landscape phasing is not 100% proportionate, but is being proposed in a manner that is logical for development of each phase in relation to the location, size and shape of each segment of landscaping (see attached landscape phase plans). The applicant has also stated that because the trails cost more than the sod, that this phasing plan is financially proportionate as well.

Phase 1: 1.43 acres
6 lots along Stillwater Drive (13.04% of the lots)
0.27 acres (9% of required open space) of open space near the clubhouse, and associated parkstrip and trees
Pool fee: $2,608.70
Fee in lieu of open space: $4,682.93

Phase 2: 3.10 acres
10 lots (21.74% of the lots)
1.30 acres (46% of required open space) of open space behind clubhouse, associated parkstrip and trees, plus shrubs adjacent to pool
Pool fee: $4,347.83
Fee in lieu of open space: $7,804.89

Phase 3: 3.34 acres
11 lots (23.91% of the lots)
1.05 acres (37% of required open space) of open space near entrance to Stillwater, and associated park strips and trees
Pool fee: $4,782.61
Fee in lieu of open space: $8,585.38

Phase 4: 5.40 acres
19 lots (41.30% of the lots)
4 asphalt trails totaling 0.18 acres (6% of required open space) of open space, to be constructed per the detail on the plans for Phase 4 open space
Pool fee: $8,260.87
Fee in lieu of open space: $14,829.29

C. Code Requirements:

Section 19.12.02(6) requires the City Council to approve phasing plans and states that "the open space or recreational facilities shall be developed in proportion to the number of dwellings intended to be developed during any stage of construction."

Staff finding: complies. The open space, payment toward recreational, and payment in lieu of open space will be developed and/or paid in proportion to the number of units within each phase.

Sarah Carroll, Senior Planner
scarroll@saratogaspringscity.com
1307 North Commerce Drive, Suite 200 • Saratoga Springs, Utah 84045
801-766-9793 x 106 • 801-766-9794 fax

The development of open space will occur proportionately with each phase. The phases shall be as follows:

Phase 1 shall include 1.43 acres of land for the development of 6 lots along Stillwater Drive; 0.27 acres of off-site open space near the clubhouse, with associated parkstrip and trees; a contribution of $2,608.70 to the HOA to be used towards the swimming pool and/or hot tub; and, a fee in lieu of open space of $4,682.93.

Phase 2 shall include 3.10 acres of land for the development of 10 lots; 1.30 acres of open space behind the clubhouse along with the associated parkstrip and trees and shrubs adjacent to pool area; a contribution of $4,347.83 to the HOA to be used towards the swimming pool and/or hot tub; and, a fee in lieu of open space of $7,804.89.

Phase 3 shall include 3.34 acres of land for the development of 11 lots; 1.05 acres of off-site open space near the entrance to the Stillwater Development along with the associated park strips and trees; a contribution of $4,782.61 to the HOA to be used towards the swimming pool and/or hot tub; and, a fee in lieu of open space of $8,585.38.

Phase 4 shall include 5.40 acres of land for the development of 19 lots; 4 asphalt trails in on-site and off-site locations, totaling 0.18 acres of open space; a contribution of $8,260.87 to the HOA o be used towards the swimming pool and/or hot tub; and, a fee in lieu of open space of $14,829.29.

D. Recommended Motion:

"I move to approve the attached phasing plan for the Stillwater Phase 6 development, located at approximately 2700 Stillwater Drive, subject to the findings and conditions listed below:"

Findings:

1. The open space and recreational facilities are being developed in proportion to the number of units within each phase and shall be developed in accordance to the Phasing outlined in the staff findings in Section C of this report, which are incorporated herein.

Conditions:

1. Phase 4 shall be the last phase to be recorded, to ensure that the majority of the open space and amenities have been installed prior to recordation of this phase.

E. Exhibits:

1. Proposed New Phasing Plan
2. Open Space Phasing Plans

Sarah Carroll, Senior Planner
scarroll@saratogaspringscity.com
1307 North Commerce Drive, Suite 200 • Saratoga Springs, Utah 84045
801-766-9793 x 106 • 801-766-9794 fax

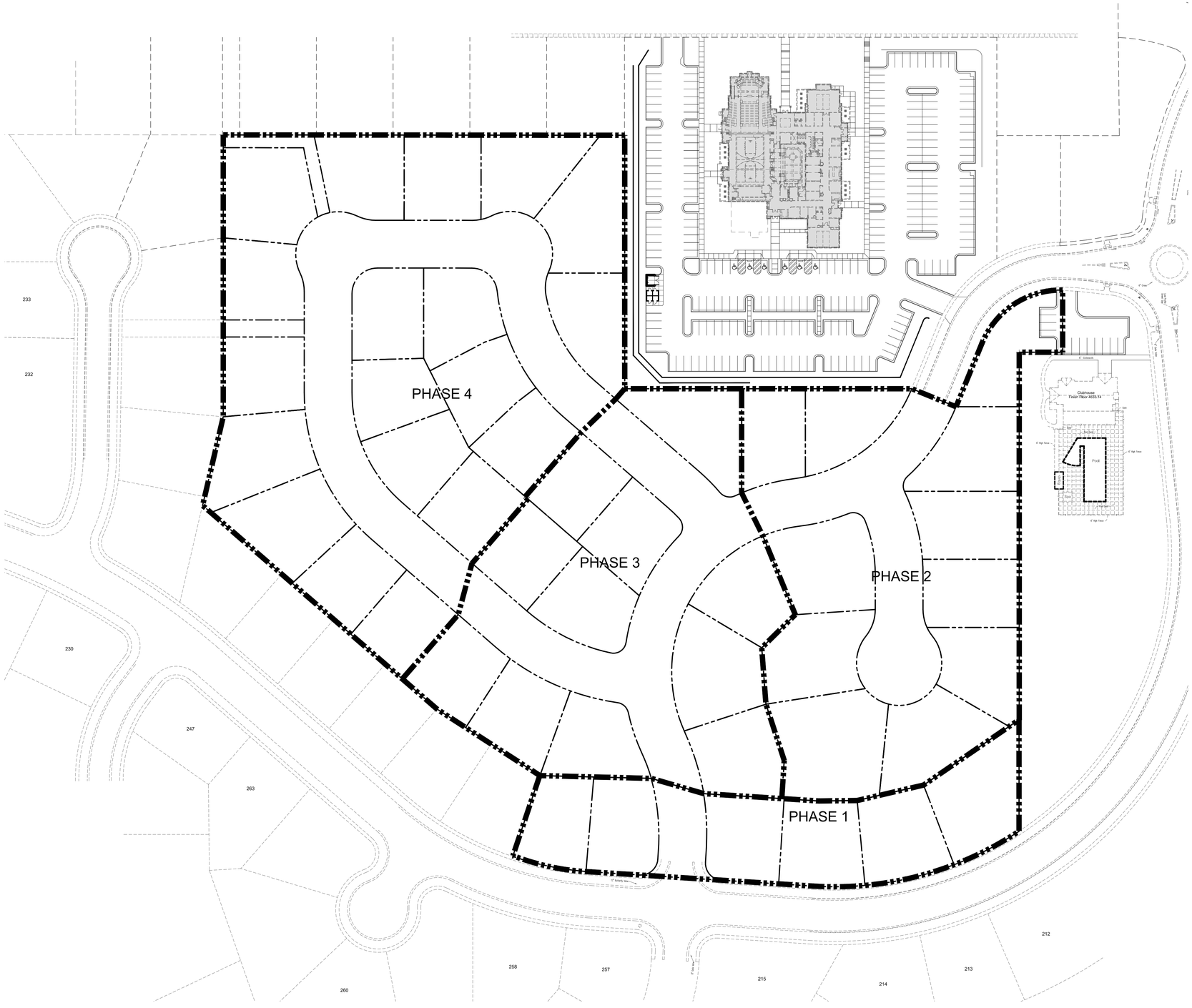

	Square Footage	Acreage	Percent of total
Total Area	62,290	1.43	100
Total Building / Pad Area	12,000	0.28	20
Total Hard Surface Area	5,800	0.13	9
Total Impervious Area	17,800	0.41	29
Total Open Space Area	11,761	0.27	19
Total Landscaped Area	44,490	1.02	71
Total number of Lots			6

Tabulation Table-Phase 1

	Square Footage	Acreage	Percent of total
Total Area	135,123	3.10	100
Total Building / Pad Area	20,000	0.46	15
Total Hard Surface Area	16,534	0.38	12
Total Impervious Area	36,534	0.84	27
Total Open Space Area	56,624	1.30	42
Total Landscaped Area	98,588	2.26	73
Total number of Lots			10

Tabulation Table-Phase 2

	Square Footage	Acreage	Percent of total
Total Area	145,346	3.34	100
Total Building / Pad Area	22,000	0.51	15
Total Hard Surface Area	26,138	0.60	18
Total Impervious Area	48,138	1.11	33
Total Open Space Area	0	0	0
Total Landscaped Area	97,208	2.23	68
Total number of Lots			6

Tabulation Table-Phase 3

	Square Footage	Acreage	Percent of total
Total Area	235,261	5.40	100
Total Building / Pad Area	38,000	0.87	16
Total Hard Surface Area	26,967	0.62	11
Total Impervious Area	64,967	1.49	27
Total Open Space Area	4,714	0.11	2
Total Landscaped Area	170,293	3.91	72
Total number of Lots			19

Tabulation Table-Phase 4

DUDLEY AND ASSOCIATES
ENGINEERS PLANNERS SURVEYORS
353 EAST 1200 SOUTH, OREM, UTAH
801-224-1252

Stillwater Subdivision Plat 6

Phasing Plan

City Utah

Revisions

Date
5-19-2014

Scale
1" = 60'

By
TD

Tracing No.
L -

Sheet No.
C -

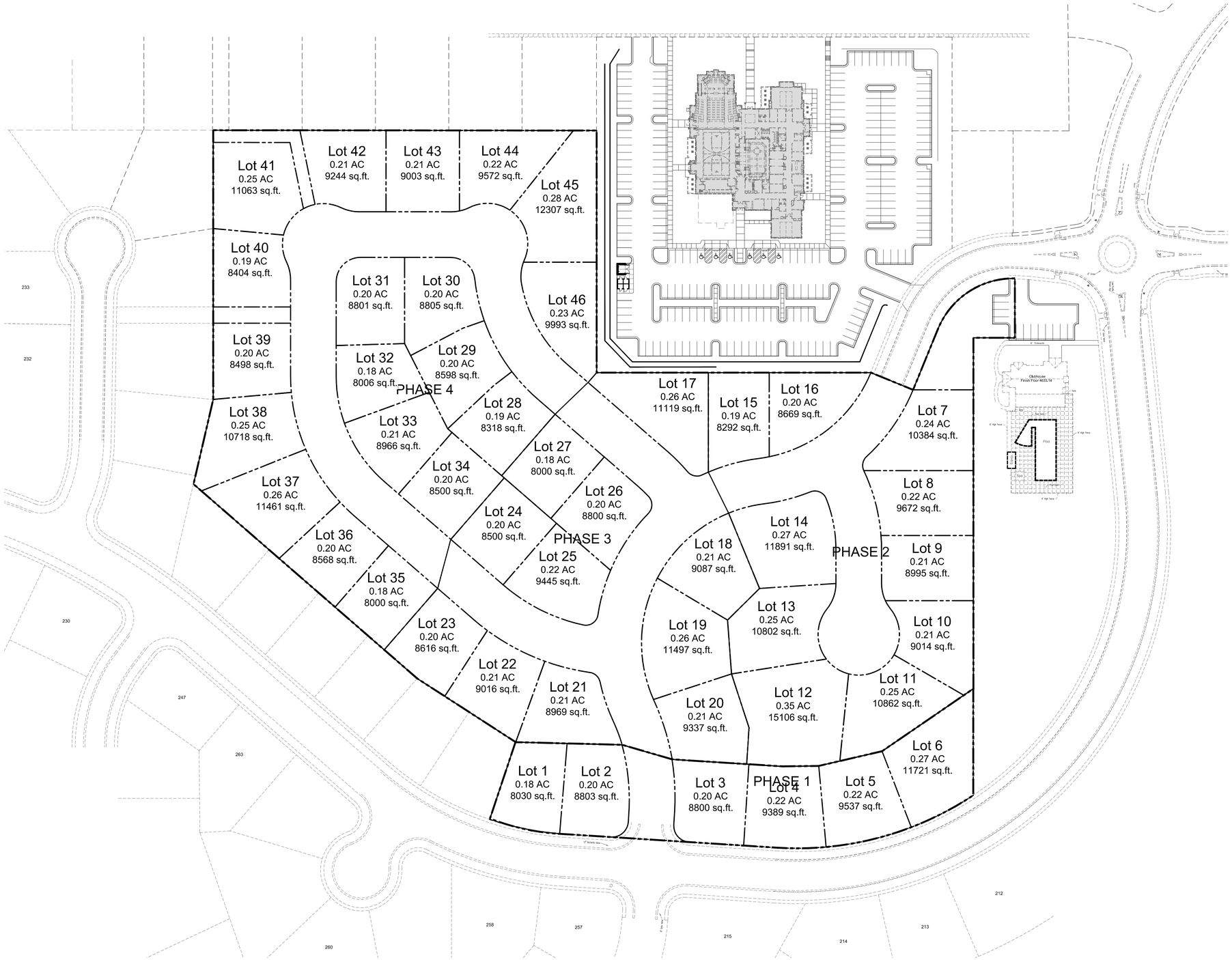

DUDLEY AND ASSOCIATES
ENGINEERS PLANNERS SURVEYORS
353 EAST 1200 SOUTH, OREM, UTAH
801-224-1252

Stillwater Subdivision Plat 6

Phasing Plan

City Utah

Revisions

Date	5-19-2014
Scale	1" = 60'
By	TD
Tracing No.	L -

Sheet No.
C -

Stillwater Phase 6

Saratoga Springs Utah

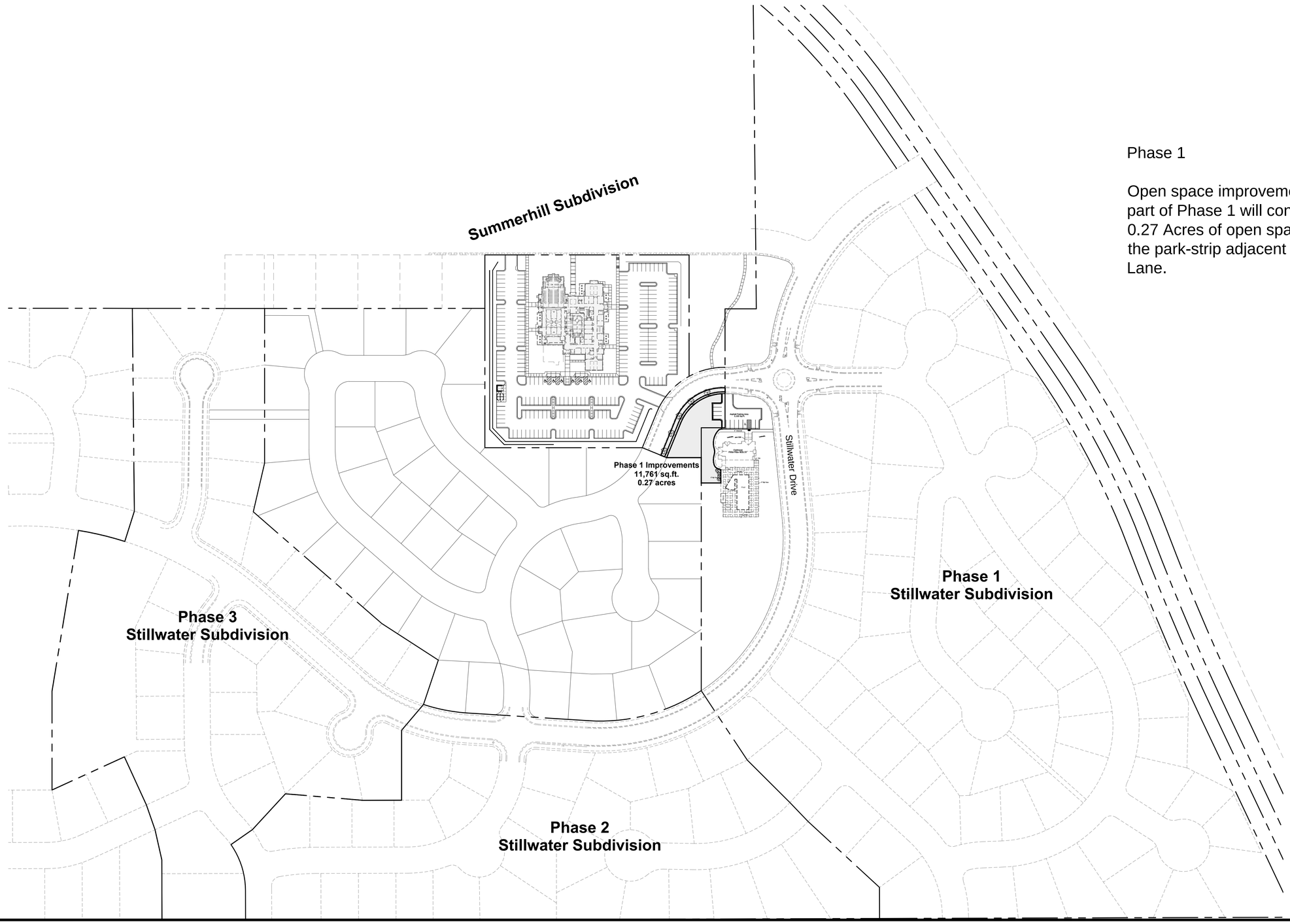

Phase 1

Open space improvements as part of Phase 1 will consist of 0.27 Acres of open space and the park-strip adjacent to Ivy Lane.

DUDLEY AND ASSOCIATES
ENGINEERS PLANNERS SURVEYORS
353 EAST 1200 SOUTH, OREM, UTAH
801-224-1252

Stillwater Phase 6

Open Space Phase 1

Saratoga Springs Utah

Revisions

Date	5-27-2014
Scale	1" = 50'
By	TD
Tracing No.	L - 13900

Sheet No.
L - 1.0

Stillwater Phase 6

Saratoga Springs Utah

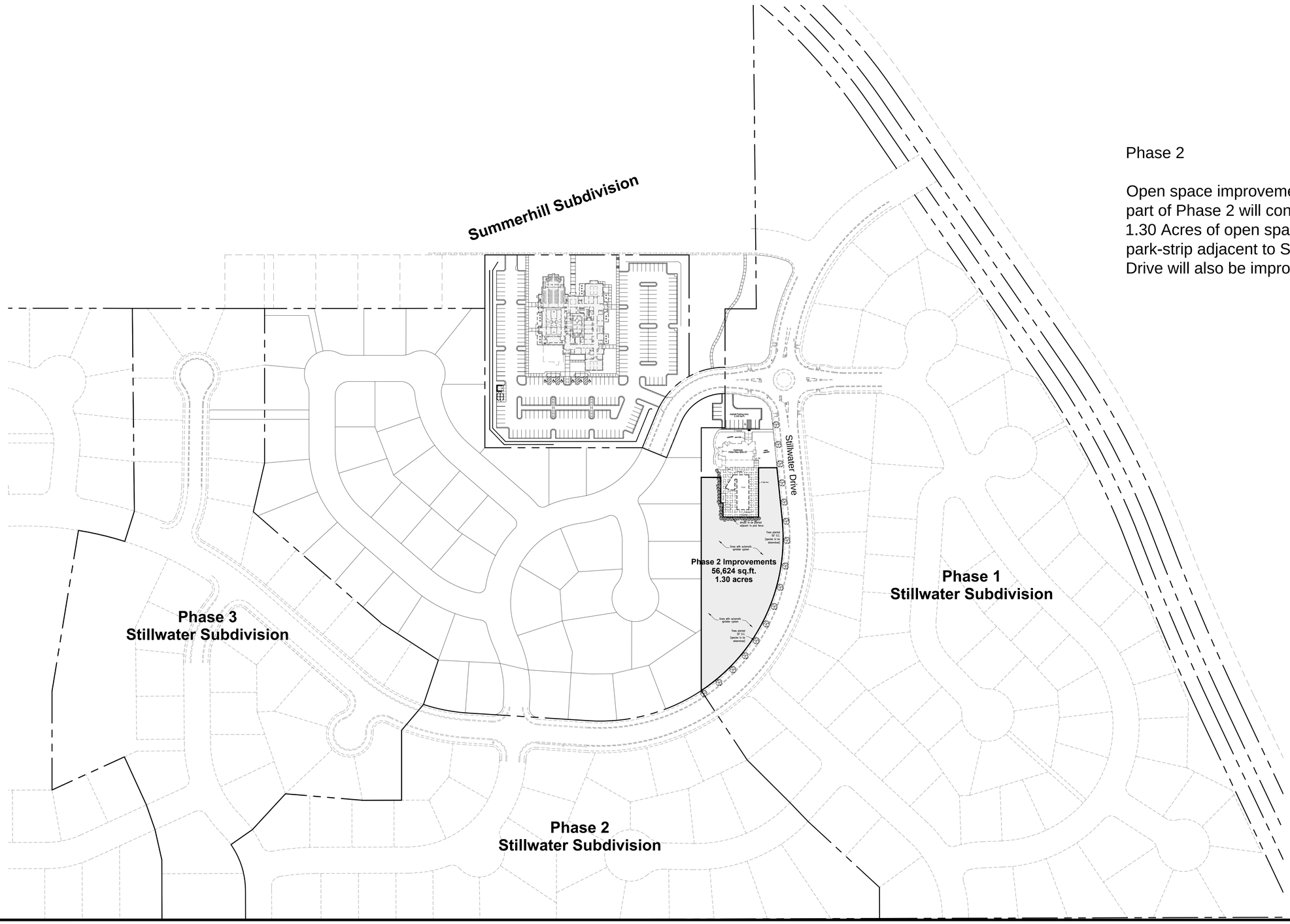

Phase 2

Open space improvements as part of Phase 2 will consist of 1.30 Acres of open space, the park-strip adjacent to Stillwater Drive will also be improved.

DUDLEY AND ASSOCIATES
ENGINEERS PLANNERS SURVEYORS
353 EAST 1200 SOUTH, OREM, UTAH
801-224-1252

Stillwater Phase 6

Open Space Phase 2

Saratoga Springs Utah

Revisions

Date	5-27-2014
Scale	1" = 50'
By	TD
Tracing No.	L - 13900

Sheet No.
L - 1.1

Stillwater Phase 6

Saratoga Springs Utah

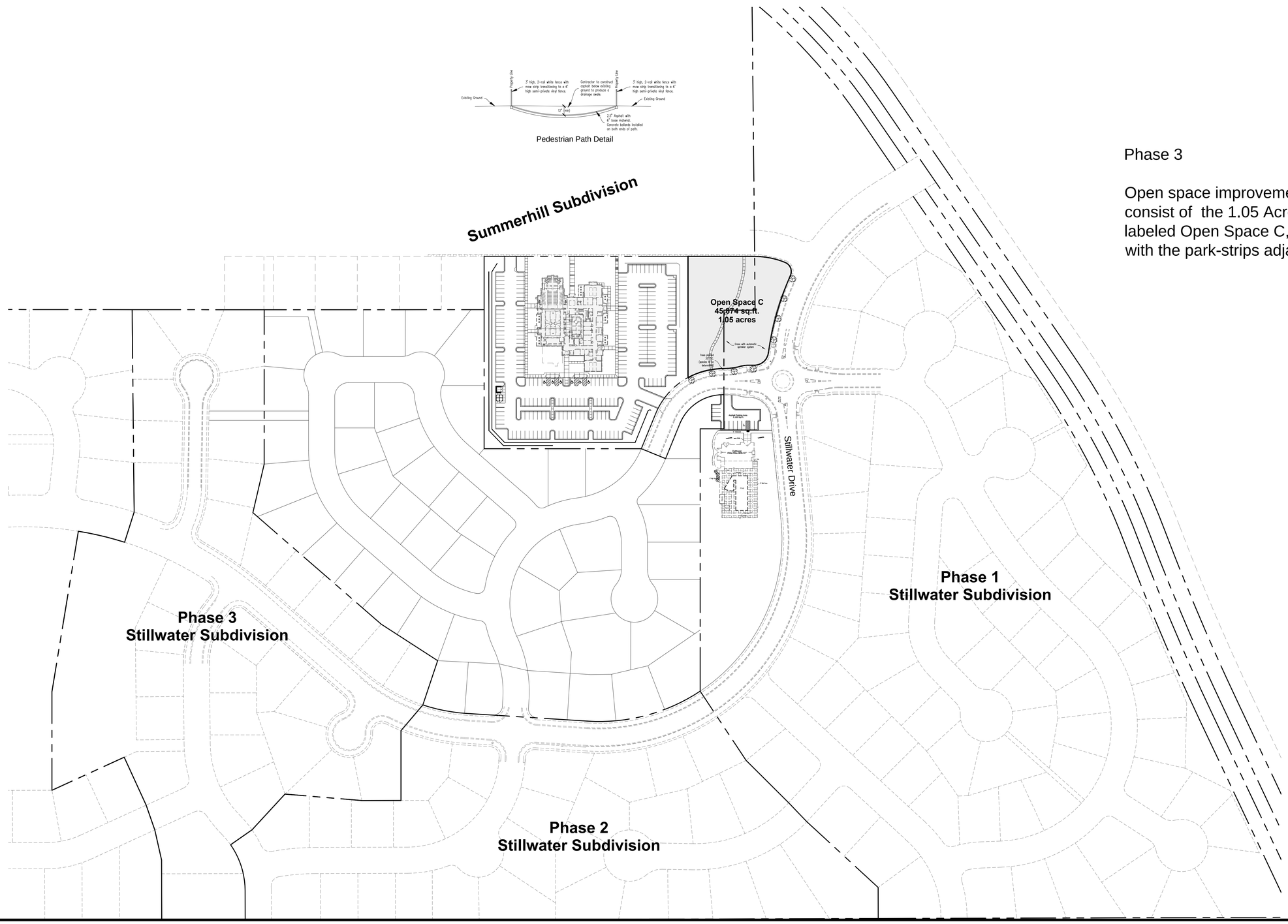

Phase 3

Open space improvements will consist of the 1.05 Acre area labeled Open Space C, along with the park-strips adjacent.

DUDLEY AND ASSOCIATES
ENGINEERS PLANNERS SURVEYORS
353 EAST 1200 SOUTH, OREM, UTAH
801-224-1252

Stillwater Phase 6

Open Space Phase 3

Saratoga Springs Utah

Revisions

Date	5-27-2014
Scale	1" = 50'
By	TD
Tracing No.	L - 13900

Sheet No.
L - 1.2

Stillwater Phase 6

Saratoga Springs Utah

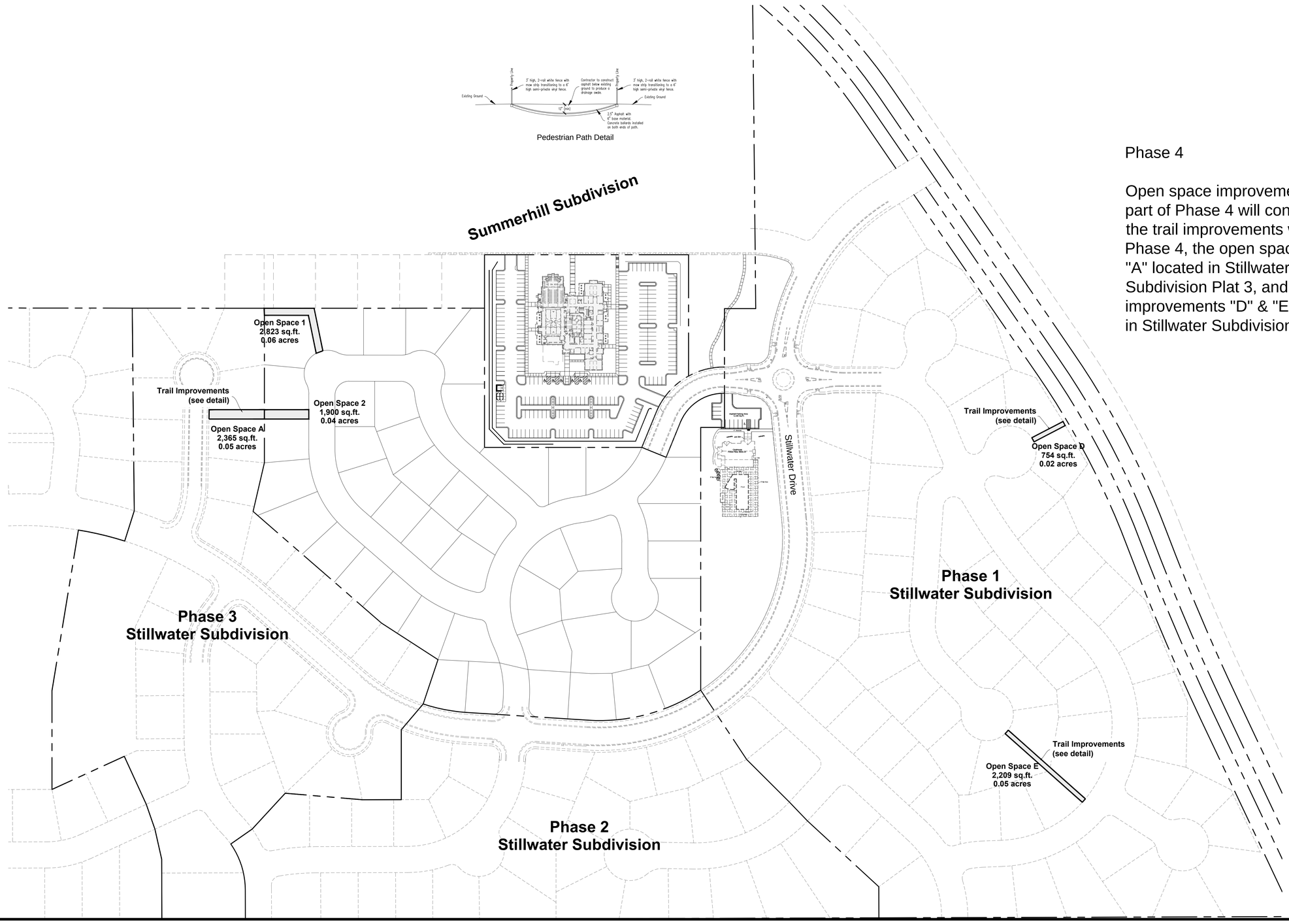

Phase 4

Open space improvements as part of Phase 4 will consist of the trail improvements within Phase 4, the open space area "A" located in Stillwater Subdivision Plat 3, and the trail improvements "D" & "E" located in Stillwater Subdivision Plat A.

DUDLEY AND ASSOCIATES
ENGINEERS PLANNERS SURVEYORS
353 EAST 1200 SOUTH, OREM, UTAH
801-224-1252

Stillwater Phase 6

Open Space Phase 4

Saratoga Springs Utah

Revisions

Date	5-27-2014
Scale	1" = 50'
By	TD
Tracing No.	L - 13900

Sheet No.
L - 1.2

City Council
Staff Report

Author: Jeremy D. Lapin, P.E., City Engineer
Subject: Amendment to Section 8.02 of the City Code – Sewer requirements
Date: June 3, 2014
Type of Item: Ordinance adopting amendments to Section 8.02 of the City Code

Description:

A. Topic:

This item is for an ordinance approving amendments to Section 8.02 of the City Code. This section of code deals with the requirements for sanitary Sewer for new development.

B. Background:

In response to the recent Sailhouse project, staff has reviewed the City's existing code to determine what revisions would be required to permit the development to be served by individual septic systems on each lot instead of connecting to the City's Sanitary Sewer system.

C. Analysis:

Staff has contacted the Utah County Health Department, which regulates septic tanks in the County, and also researched State law concerning the proposal. State law indicates the City may only require a building on an existing parcel to connect if it is within 300' of the property line however; the City is not required to allow further subdivision of a property without the construction of a sewer connection. The City Code currently requires all new development to install sewer improvements and connect to the City's sewer system therefore the Code does not currently allow septic tanks.

The proposed amendments would permit septic systems instead of connecting to the City's sewer system in certain limited instances. Lots would need to be a minimum of one acre and would be limited to the A, RA, and RR zones. The City would still reserve the right to require connection to the City's sanitary sewer system if and when it is within 300' of the property line. Proposed subdivisions would also be subject to all State regulations and County Health Department requirements.

D. Recommendation:

Staff recommend that the City Council approve an Ordinance Section 8.02 of the City Code

ORDINANCE NO. 14-16 (6-17-14)

AN ORDINANCE OF THE CITY OF SARATOGA SPRINGS, UTAH, ADOPTING AMENDMENTS TO CHAPTER 8.02 OF THE SARATOGA SPRINGS CITY CODE; ESTABLISHING ADDITIONAL REGULATIONS PERTAINING TO SEPTIC SYSTEMS IN THE CITY OF SARATOGA SPRINGS, UTAH; AND ESTABLISHING AN EFFECTIVE DATE

WHEREAS, on September 6, 2011, ordinances previously adopted by the City Council of the City of Saratoga Springs were codified pursuant to Utah Code § 10-3-707; and

WHEREAS, pursuant to authority granted in Utah Code Annotated § 10-3-701 *et seq*., the City Council for the City of Saratoga Springs may adopt and amend laws, ordinances, regulations, and codes that comprise the regulatory, penal ordinances, and administrative ordinances of the City of Saratoga Springs; and

WHEREAS, the City Council has reviewed the City Code and finds that further amendments to the Code are necessary to accomplish the purposes in Utah Code Annotated § 10-3-701 *et seq*.; and

WHEREAS, the City Council has determined that it is in the best interest of the public health, safety, and welfare that the attached modifications and amendments to the City Code be adopted.

NOW THEREFORE, the City Council of the City of Saratoga Springs, Utah does hereby ordain as follows:

SECTION I – ENACTMENT

The amendments to Chapter 8.02 of the City Code attached as Exhibit A, incorporated herein by this reference, are hereby enacted. Such amendments are shown as underlines and strikethroughs.

SECTION II – AMENDMENT OF CONFLICTING ORDINANCES

If any ordinances, resolutions, policies, or zoning maps of the City of Saratoga Springs heretofore adopted are inconsistent herewith they are hereby amended to comply with the provisions hereof. If they cannot be amended to comply with the provisions hereof, they are hereby repealed.

SECTION III – EFFECTIVE DATE

This ordinance shall take effect upon its passage by a majority vote of the Saratoga Springs City Council and following notice and publication as required by the Utah Code.

SECTION IV – SEVERABILITY

If any section, subsection, sentence, clause, phrase, or portion of this ordinance is, for any reason, held invalid or unconstitutional by any court of competent jurisdiction, such provision shall be deemed a separate, distinct, and independent provision, and such holding shall not affect the validity of the remaining portions of this ordinance.

SECTION V – PUBLIC NOTICE

The Saratoga Springs Recorder is hereby ordered, in accordance with the requirements of Utah Code §§ 10-3-710—711, to do as follows:

a. deposit a copy of this ordinance in the office of the City Recorder; and
b. publish notice as follows:
   i. publish a short summary of this ordinance for at least one publication in a newspaper of general circulation in the City; or
   ii. post a complete copy of this ordinance in three public places within the City.

ADOPTED AND PASSED by the City Council of the City of Saratoga Springs, Utah, this __ day of _____, 2014.

Signed: _____
Jim Miller, Mayor

Attest: _____ _____
Lori Yates, City Recorder Date

VOTE

Shellie Baertsch _____
Rebecca Call _____
Michael McOmber _____
Bud Poduska _____
Stephen Willden _____

EXHIBIT A

* * * * *

8.02.01. Use of Public Sewers Required.

1. It is unlawful for any person to place, deposit, or permit to be deposited in any unsanitary manner on public or private property within the City, or in any area under the jurisdiction of the City, any human or animal excrement, garbage, or other objectionable waste.

2. It is unlawful to discharge into any natural outlet within the City or in any area under the jurisdiction of the City any sewage or other polluted waters, except where suitable treatment has been provided in accordance with subsequent provisions of this article.

3. Except as provided in this article, it is unlawful to construct or maintain any privy, privy vault, septic tank or system, cesspool, private sewage treatment facility, or other structure, tank, system, or facility, which is intended or used for the disposal of wastewater.
   a. Septic systems are permitted for new subdivisions only when the following criteria are met:
      i. The nearest public sewer connection is more than 300 feet from any property line;
      ii. The property is zoned A, RA, or RR;
      iii. The property in at least one acre in size;
      iv. Every individual lot is served by an individual septic system—shared systems are not permitted;
      v. A percolation test is performed by a qualified and certified independent third party prior to preliminary plat approval;
      vi. Approval from the Utah County Health Department is obtained for each lot and all conditions of approval are verified by the City prior to plat recordation;
      vii. A note in substantially the following form is placed on the plat: "Lots shall be subject to Health Department wastewater requirements in place at the time of building permit application. Preliminary percolation subdivision feasibility tests are not a guarantee that lots will be eligible for a septic permit.";
      viii. No portion of the septic system is located within one hundred feet of the compromise line of Utah Lake, which is at an elevation of 4489.045 feet, United States Coast and Geodetic Survey Datum, adjusted 1929, per the 1985 Utah Lake Compromise and Flood Management Agreement; and
      ~~i.~~ix. Pursuant to Subsection 4 below, at such time as sewer becomes available, the owner shall connect to the City's sewer system.

~~3.~~4. ~~The owners of a~~All existing houses, structures, ~~,~~ buildings, lots, or properties used for human occupancy ~~, employment, recreation, or other purposes~~ situated within the City ~~and abutting on any street, alley, or right of way in which there is now located or may in~~

~~the future~~ shall ~~be located a public sanitary sewer of the City are required~~ , at the owner's expense, ~~to~~ install suitable toilet facilities therein and to connect such facilities directly with the ~~proper~~ City's sewer system in accordance with the provisions of this article~~,~~ within sixty days after date of official notice to do so; provided, that the public sewer is within 300 feet of ~~the~~ any portion of the property line.

(Ord. 11-9; Ord. 09-16)

8.02.02. Definitions.

Unless the context specifically indicates otherwise, the meanings of terms used in this Chapter shall be as follows:

1. **"Biochemical Oxygen Demand (BOD)"** means oxygen utilized in the biochemical oxidation of organic matter under standard laboratory procedure in five days at twenty degrees centigrade (20°C), expressed in milligrams per liter (mg/I).

2. **"Building Drain"** means that part of the lowest piping of a drainage system that receives the discharge from soil, waste and other drainage pipes inside and that extends thirty inches (762 mm) in developed length of pipe beyond the exterior walls of the building and conveys the drainage to the building sewer.

3. **"Building Sewer"** means that part of the drainage system that extends from the end of the building drain and conveys the discharge to a public sewer, private sewer, individual sewage disposal system, or other point of disposal.

4. **"Combined Sewer"** means a sewer intended to receive both wastewater and storm or surface water.

5. **"Easement"** means an acquired legal right for the specific use of land owned by others.

6. **"Floatable oil"** means oil, fat, or grease in a physical state such that it will separate by gravity from wastewater by treatment in an approved pretreatment facility. Wastewater shall be considered free of floatable fat if it is properly pretreated and the wastewater does not interfere with the collection system.

7. **"Garbage"** means the animal and vegetable waste resulting from the handling, preparation, cooking, and serving of foods.

8. **"Industrial Wastes"** means the wastewater from industrial processes, trade or business as distinct from domestic or sanitary wastes.

9. **"Natural Outlet"** means any outlet, including storm sewers and combined sewer overflows, into a watercourse, pond, ditch, lake, or other body of surface or ground water.

10. **"Person"** means any individual, firm, company, association, society, corporation, or group.

11. **"pH"** means the logarithm of the reciprocal of the hydrogen ions, in grams, per liter of solution. Neutral water, for example, has pH value of seven and hydrogen ion concentration of ten.

12. **"Properly Shredded Garbage"** means the wastes from the preparation, cooking, and dispensing of food that has been shredded to such a degree that all particles will be carried freely under the flow conditions normally prevailing in public sewers, with no particle greater than one-half inch (1.27 centimeters) in any dimension.

13. **"Public sewer"** means a common sewer controlled by a governmental agency or public utility.

14. **"Sanitary Sewer"** means a sewer that carries liquid and water carried wastes from residences, commercial buildings, industrial plants, and institutions, together with minor quantities of ground, storm, and surface waters that are not admitted intentionally.

15. **"Septic System"** means a self-contained underground system for the collection, storage, treatment, neutralization, stabilization, and disposal of wastewater.

~~15.~~16. **"Sewage"** means the spent water of a community. The preferred term is "wastewater". See definition of wastewater in this Section.

~~16.~~17. **"Sewer"** means a pipe or conduit that carries wastewater or drainage water.

~~17.~~18. **"Slug"** means any discharge of water or wastewater which in concentration of any given constituent or in quantity of flow exceeds for any period of duration longer than fifteen minutes more than five times the average twenty-four hour concentration of flows during normal operation and shall adversely affect the collection system or performance of the wastewater treatment works.

~~18.~~19. **"Storm Drain"** or **"storm sewer"** means a drain or sewer for conveying water, ground water, subsurface water, or unpolluted water from any source.

~~19.~~20. **"Suspended solids"** means the total suspended matter that either floats on the surface of or is in suspension in water, wastewater, or other liquid and that is removable by laboratory filtering as prescribed in standard methods for the examination of water and wastewater, and referred to a non-filterable residue.

~~20.~~21. **"Unpolluted water"** means water of quality equal to or better than the effluent criteria in effect, or water that would not cause violation of receiving water quality standards and would not be benefited by discharge to the sanitary sewers and wastewater treatment facilities provided.

~~21.~~22. **"Wastewater"** means the spent water of a community. From the standpoint of source, it may be a combination of the liquid and water carried wastes from residences, commercial buildings, industrial plants, and institutions, together with any ground water, surface water, and storm water that may be present.

~~22.~~23. **"Wastewater facilities"** means the structures, equipment, and processes required to collect, carry away, and treat domestic and industrial wastes and dispose of the effluent.

~~23.~~24. **"Wastewater Treatment Works"** means an arrangement of devices and structures for treating wastewater, industrial waste, and sludge. Sometimes used as synonymous with "waste treatment plant", "wastewater treatment plant" or "water pollution control plant".

~~24.~~25. **"Watercourse"** means a natural or artificial channel for the passage of water either continuously or intermittently.

(Ord. 14-16; Ord. 11-9; Ord. 09-16)

SECTION IV – SEVERABILITY

If any section, subsection, sentence, clause, phrase, or portion of this ordinance is, for any reason, held invalid or unconstitutional by any court of competent jurisdiction, such provision shall be deemed a separate, distinct, and independent provision, and such holding shall not affect the validity of the remaining portions of this ordinance.

SECTION V – PUBLIC NOTICE

The Saratoga Springs Recorder is hereby ordered, in accordance with the requirements of Utah Code §§ 10-3-710—711, to do as follows:

a. deposit a copy of this ordinance in the office of the City Recorder; and
b. publish notice as follows:
   i. publish a short summary of this ordinance for at least one publication in a newspaper of general circulation in the City; or
   ii. post a complete copy of this ordinance in three public places within the City.

ADOPTED AND PASSED by the City Council of the City of Saratoga Springs, Utah, this __ day of _____, 2014.

Signed: _____
Jim Miller, Mayor

Attest: _____ _____
Lori Yates, City Recorder Date

VOTE

Shellie Baertsch _____
Rebecca Call _____
Michael McOmber _____
Bud Poduska _____
Stephen Willden _____

EXHIBIT A

* * * * *

8.02.01. Use of Public Sewers Required.

1. It is unlawful for any person to place, deposit, or permit to be deposited in any unsanitary manner on public or private property within the City, or in any area under the jurisdiction of the City, any human or animal excrement, garbage, or other objectionable waste.

2. It is unlawful to discharge into any natural outlet within the City or in any area under the jurisdiction of the City any sewage or other polluted waters, except where suitable treatment has been provided in accordance with subsequent provisions of this article.

3. Except as provided in this article, it is unlawful to construct or maintain any privy, privy vault, septic tank or system, cesspool, private sewage treatment facility, or other structure, tank, system, or facility, which is intended or used for the disposal of wastewater.
   a. Septic systems are permitted for new subdivisions only when the following criteria are met:
      i. The nearest public sewer connection is more than 300 feet from any property line;
      ii. The property is zoned A, RA, or RR;
      iii. The property in at least one acre in size;
      iv. Every individual lot is served by an individual septic system—shared systems are not permitted;
      v. A percolation test is performed by a qualified and certified independent third party prior to preliminary plat approval;
      vi. Approval from the Utah County Health Department is obtained for each lot and all conditions of approval are verified by the City prior to plat recordation;
      vii. A note in substantially the following form is placed on the plat: "Lots shall be subject to Health Department wastewater requirements in place at the time of building permit application. Preliminary percolation subdivision feasibility tests are not a guarantee that lots will be eligible for a septic permit.";
      viii. No portion of the septic system is located within one hundred feet of the compromise line of Utah Lake, which is at an elevation of 4489.045 feet, United States Coast and Geodetic Survey Datum, adjusted 1929, per the 1985 Utah Lake Compromise and Flood Management Agreement; and
      ~~i.~~ix. Pursuant to Subsection 4 below, at such time as sewer becomes available, the owner shall connect to the City's sewer system.

~~3.~~4. ~~The owners of a~~All existing houses, structures, ~~,~~ buildings, lots, or properties used for human occupancy ~~, employment, recreation, or other purposes~~ situated within the City ~~and abutting on any street, alley, or right of way in which there is now located or may in~~

~~the future~~ shall ~~be located a public sanitary sewer of the City are required~~ , at the owner's expense, ~~to~~ install suitable toilet facilities therein and to connect such facilities directly with the ~~proper~~ City's sewer system in accordance with the provisions of this article~~,~~ within sixty days after date of official notice to do so; provided, that the public sewer is within 300 feet of ~~the~~ any portion of the property line.

(Ord. 11-9; Ord. 09-16)

8.02.02. Definitions.

Unless the context specifically indicates otherwise, the meanings of terms used in this Chapter shall be as follows:

1. **"Biochemical Oxygen Demand (BOD)"** means oxygen utilized in the biochemical oxidation of organic matter under standard laboratory procedure in five days at twenty degrees centigrade (20°C), expressed in milligrams per liter (mg/I).

2. **"Building Drain"** means that part of the lowest piping of a drainage system that receives the discharge from soil, waste and other drainage pipes inside and that extends thirty inches (762 mm) in developed length of pipe beyond the exterior walls of the building and conveys the drainage to the building sewer.

3. **"Building Sewer"** means that part of the drainage system that extends from the end of the building drain and conveys the discharge to a public sewer, private sewer, individual sewage disposal system, or other point of disposal.

4. **"Combined Sewer"** means a sewer intended to receive both wastewater and storm or surface water.

5. **"Easement"** means an acquired legal right for the specific use of land owned by others.

6. **"Floatable oil"** means oil, fat, or grease in a physical state such that it will separate by gravity from wastewater by treatment in an approved pretreatment facility. Wastewater shall be considered free of floatable fat if it is properly pretreated and the wastewater does not interfere with the collection system.

7. **"Garbage"** means the animal and vegetable waste resulting from the handling, preparation, cooking, and serving of foods.

8. **"Industrial Wastes"** means the wastewater from industrial processes, trade or business as distinct from domestic or sanitary wastes.

9. **"Natural Outlet"** means any outlet, including storm sewers and combined sewer overflows, into a watercourse, pond, ditch, lake, or other body of surface or ground water.

10. **"Person"** means any individual, firm, company, association, society, corporation, or group.

11. **"pH"** means the logarithm of the reciprocal of the hydrogen ions, in grams, per liter of solution. Neutral water, for example, has pH value of seven and hydrogen ion concentration of ten.

12. **"Properly Shredded Garbage"** means the wastes from the preparation, cooking, and dispensing of food that has been shredded to such a degree that all particles will be carried freely under the flow conditions normally prevailing in public sewers, with no particle greater than one-half inch (1.27 centimeters) in any dimension.

13. **"Public sewer"** means a common sewer controlled by a governmental agency or public utility.

14. **"Sanitary Sewer"** means a sewer that carries liquid and water carried wastes from residences, commercial buildings, industrial plants, and institutions, together with minor quantities of ground, storm, and surface waters that are not admitted intentionally.

15. **"Septic System"** means a self-contained underground system for the collection, storage, treatment, neutralization, stabilization, and disposal of wastewater.

~~15.~~16. **"Sewage"** means the spent water of a community. The preferred term is "wastewater". See definition of wastewater in this Section.

~~16.~~17. **"Sewer"** means a pipe or conduit that carries wastewater or drainage water.

~~17.~~18. **"Slug"** means any discharge of water or wastewater which in concentration of any given constituent or in quantity of flow exceeds for any period of duration longer than fifteen minutes more than five times the average twenty-four hour concentration of flows during normal operation and shall adversely affect the collection system or performance of the wastewater treatment works.

~~18.~~19. **"Storm Drain"** or **"storm sewer"** means a drain or sewer for conveying water, ground water, subsurface water, or unpolluted water from any source.

~~19.~~20. **"Suspended solids"** means the total suspended matter that either floats on the surface of or is in suspension in water, wastewater, or other liquid and that is removable by laboratory filtering as prescribed in standard methods for the examination of water and wastewater, and referred to a non-filterable residue.

~~20.~~21. **"Unpolluted water"** means water of quality equal to or better than the effluent criteria in effect, or water that would not cause violation of receiving water quality standards and would not be benefited by discharge to the sanitary sewers and wastewater treatment facilities provided.

~~21.~~22. **"Wastewater"** means the spent water of a community. From the standpoint of source, it may be a combination of the liquid and water carried wastes from residences, commercial buildings, industrial plants, and institutions, together with any ground water, surface water, and storm water that may be present.

~~22.~~23. **"Wastewater facilities"** means the structures, equipment, and processes required to collect, carry away, and treat domestic and industrial wastes and dispose of the effluent.

~~23.~~24. **"Wastewater Treatment Works"** means an arrangement of devices and structures for treating wastewater, industrial waste, and sludge. Sometimes used as synonymous with "waste treatment plant", "wastewater treatment plant" or "water pollution control plant".

~~24.~~25. **"Watercourse"** means a natural or artificial channel for the passage of water either continuously or intermittently.

(Ord. 14-16; Ord. 11-9; Ord. 09-16)

RESOLUTION NO. R14 -32 (6-17-14)

A RESOLUTION AMENDING THE CONSOLIDATED FEE SCHEDULE FOR THE CITY OF SARATOGA SPRINGS PERTAINING TO GRADING PERMIT PLAN REVIEW AND INSPECTION FEES; AND ESTABLISHING AN EFFECTIVE DATE.

WHEREAS, the City Council of the City of Saratoga Springs is empowered pursuant to Utah law to adopt a resolution establishing fees and has previously established an equitable system of fees to cover certain costs of providing municipal services; and

WHEREAS, the City Council finds it necessary to amend the fee schedule pertaining to grading permit plan review and inspection fees and that such amendment is an equitable manner of covering the costs of providing plan review and inspection services to City residents, businesses, and developers; and

WHEREAS, the City Council finds that it is in the public interest to amend the fee schedule with regard to grading permit plan review and inspection fees only.

NOW, THEREFORE be it resolved by the City Council of the City of Saratoga Springs that the City's Consolidated Fee Schedule is hereby amended to include the following fees and changes:

Grading Permits:

1. Regular Grading Permit Plan Review Fees
   (less than 1,000 cubic yards) $0.00
2. Engineered Grading Permit Plan Review Fees
   (greater than 1,000 cubic yards) $500.00, plus $50.00 per acre
3. Inspection Fees: Based on Engineer's Calculation of the total estimated cost of the proposed work or improvements plus contingency (115%)
   a. $1.00 to $50,000 5%
   b. $50,001 to $250,000 $2,500.00, plus 2 ½% of remaining balance greater than $50,000, but not more than $250,000.
   c. $250,001 to $500,000 $7,500.00, plus 2% of remaining balance greater than $250,000, but not more than $500,000.
   d. Over $500,001 $11,250.00, plus 1% of remaining balance greater than $500,000

This resolution shall take effect immediately upon passage.

ADOPTED AND PASSED by the Governing Body of the City of Saratoga Springs, Utah, this 17th day of June, 2014.

CITY OF SARATOGA SPRINGS

A UTAH MUNICIPAL CORPORATION

Signed:_____
Jim Miller, Mayor

Attest:_____ _____
City Recorder Date

A RESOLUTION AMENDING THE CONSOLIDATED FEE SCHEDULE FOR THE CITY OF SARATOGA SPRINGS AND ESTABLISHING AN EFFECTIVE DATE.

WHEREAS, the governing body of the City of Saratoga Springs is empowered pursuant to Utah law to adopt a resolution establishing fees and has previously established an equitable system of fees to cover certain costs of providing some municipal services; and

WHEREAS, the City Council finds that it is in the public interest to reaffirm all fees and charges previously enacted except for those fees and charges which are specifically amended or changed in this resolution; and

NOW, THEREFORE be it resolved by the City Council of the City of Saratoga Springs that the following fees and charges set forth in this resolution are hereby amended, enacted, and adopted:

1. Miscellaneous Fees:

A.	Certification of record.	$1.00/certification
B.	Postage:	Actual cost to City
C.	Other costs allowed by law:	Actual cost to City
D.	Miscellaneous copying:	$0.10/printed page (8 ½ X 11) $0.15/printed page (11 X 14) $0.20/printed page (11 X 17)
E.	Bound copy of Development Code	$25.00
F.	Standards & Specifications Manual	$50.00
G.	Bound copy of the Culinary Water Master Plan	$25.00
H.	Bound copy of the Secondary Water Master Plan	$25.00
I.	Bound copy of the Storm Drain Master Plan	$25.00
J.	Bound copy of the Sewer Master Plan	$25.00
K.	Bound copy of the Transportation Master Plan	$25.00
L.	Personnel Policies and Procedures Manual	$25.00
M.	City Maps	
	1. 24 x 36 Color Map	$20.00
	2. 18 x 24 Color Map	$15.00
	3. 11 x 17 Color Map	$5.00
N.	General Plan	$15.00
O.	Registering Sex Offender Registrants	$19.00

2. Building Inspections:

A.	Building Permits	100% of UBC schedule table 1-A, as shown below.
	Total Valuation	
	$1.00 - 500.00	$24.00
	$501.00 – 2000.00	$24.00 for the first $500.00 plus $3.00 for each additional $100.00, or fraction thereof, to and including $2000.00.
	$2001.00 – 40,000.00	$69.00 for the first $2000.00 plus $11.00 for each additional $1000.00, or fraction thereof, to and including $40,000.00.

$40,001.00 – 100,000.00	$487.00 for the first $40,000.00 plus $9.00 for each additional $1000.00, or fraction thereof, to and including $100,000.00.
$50,001.00 – 100,000.00	$643.75 for the first $50,000.00 plus $7.00 for each additional $1000.00, or fraction thereof, to and including $100,000.00.
$100,001.00 – 500,000.00	$1,027.00 for the first $100,000.00 plus $7.00 for each additional $1000.00, or fraction thereof to and including $500,000.00.
$500,001.00 – 1,000,000.00	$3,827.00 for the first $500,000.00 plus $5.00 for each additional $1,000.00 or fraction thereof, to and including $1,000,000.00
$1,000,001.00 – 5,000,000.00	$6,327.00 for the first $1,000,000.00 plus $3.00 for each additional $1000.00, or or fraction thereof, to and including $5,000,000.00.
$5,000,001.00 and up	$18,327.00 for the first $5,000,000.00 plus $1.00 for each additional $1000.00, or fraction thereof.

B. Escrow Bond Fees (these fees are collected for items that may not be able to be completed prior to final inspection due to weather conditions, will be refunded upon request by builder after completion of items):

1. Replacement of City Sidewalks:	100.00 per section
2. Final Grade:	$200.00 per lot
3. Remove Dirt Piles:	$500.00
4. Install Approach:	$500.00/2 car drive $750.00/3 car drive
5. Replacement of Curb and Gutter:	$50.00 per foot
6. Concrete Steps and Porches:	$5.00 per sq. ft.
7. Flat Work Concrete:	$2.00 per sq. ft.
8. Asphalt:	$2.00 per sq. ft.

C. Other Inspections and fees:

1. Demolition Fee, When required by the building official:	$25.00
2. Plan Review Fees:	65% of the building permit fee.

3.	Inspections outside normal business Hours* [min. charge 2 hrs.]	$47.00
4.	Re-inspection fee per hour* [min. charge one hour]	$47.00
5.	Inspections for which no fee is specifically indicated: per hour* [min. charge one hour]	$47.00
6.	Additional plan reviews required by changes Additions or revisions to the plans: Per hour* [min. charge one hour]	$47.00
7.	For use of outside consultants for plan reviews, inspections or both.	Actual Costs**
8.	Permits not requiring a complete plan review:	25% of building permit fees
9.	A fee collected for the State of Utah for inspector training:	1% of permit fee.
10.	Basement Inspection Fee	$100.00+

*Or the total hourly cost to the jurisdiction, whichever is greatest.
This cost shall include supervision, overhead, equipment, hourly wages and fringe benefits of the employee involved.
**Actual cost includes administrative overhead costs.
+This fee covers the cost of future basement permit and inspection services if and when a homeowner decides to finish the basement portion of the home. That is, in the future, a homeowner can receive a permit and inspection related to finishing a basement at no charge.

D. Electrical Permit Fees:

1.	For the issuance of each Electrical Permit Fee:	$22.00
2.	For the issuance of each Supplemental Permit for which the original permit has not expired:	$6.50

NOTE: These fees are not applicable when an electrical permit is issued in conjunction with a building permit.

SYSTEM FEE SCHEDULE
[note: the following do not include permit issuing fees.]

1. New Residential Buildings

The following fees shall include the wiring and electrical equipment in or on each building, or other electrical equipment on the premises constructed at the same time.

For new multi family residential buildings [apartments and condominiums] having three or more living units not including the area of the garage, carports, or other noncommercial automobile storage areas constructed at the same time; Per square foot: $.045

For one and two family residential building not including garages, carports, and other minor accessory buildings constructed at the same time; Per square foot:	$.050
For all other types of residential occupancies and alterations, additions, and modifications to existing residential buildings;	use the UNIT FEE SCHEDULE.

2. Private Swimming Pools

For new private, residential, in-ground, swimming pools for single family and multi-family occupancies including the complete system of necessary branch circuit wiring, bonding, grounding, underwater lighting, water pumping, and other similar electrical equipment directly related to the operation of a swimming pool, each pool:	$44.25
For other types of swimming pools, therapeutic whirlpools, spas, and alterations to the existing swimming pools;	use the UNIT FEE SCHEDULE.

3. Carnivals and Circuses

Carnivals, circuses, or other traveling shows or exhibitions utilizing transportation type rides, booths and attractions.

For electric generators and electrically driven rides; Each:	$22.00
For mechanically driven rides and walk-through attractions or displays having electric lighting; Each:	$6.50
For a system of area and booth lighting; Each:	$6.50
For permanently installed rides, booths, displays, and attractions;	use the UNIT FEE SCHEDULE.

4. Temporary Power Service

For each temporary power service power pole or pedestal including all pole or pedestal-mounted receptacle outlets and appurtenances; Each:	$22.00
For a temporary distribution system and temporary lighting and receptacle outlets for construction sites, decorative lights, Christmas tree sale stands, fire work stands, etc. Each:	$11.00

UNIT FEE SCHEDULE
[Note the following do not include permit fees]

1. Receptacles, Switches, Light Outlets.

For receptacle switches, lights, or other outlets at which current is controlled, Except services, feeders and meters:	
First 20; each	$1.00
Additional Outlets; each	$0.65

NOTE: For multi outlet assemblies, each 5 feet or fraction thereof may be considered as one outlet.

2. Lighting Fixtures

For lighting fixtures and other lamp holding devices:	
First 20; each	$1.00
Additional fixtures; each	$0.65
For pole or platform-mounted fixtures	
Each	$1.00
For theatrical type lighting fixtures or assemblies;	
Each	$1.00

3. Residential appliances

For fixed residential appliance or receptacle outlets for the same, including wall mounted electric ovens; counter mounted cooking tops; electric ranges; self-contained room, console, or through wall air conditioners, space heaters, food waste grinders, dishwashers, washing machines, water heaters, clothes dryers, or other motor-operated appliances not exceeding one horse power [HP-746W] in rating;	$4.25

NOTE: For other types of air conditioners and other motor driven appliances having larger electrical ratings, see Power Apparatus.

4. Nonresidential Appliances

For non-residential appliances and self-contained factory wired, non-residential appliances not exceeding one horse power [HP], kilowatt [KW], or kilovolt ampere [KVA], in rating including medical or dental devices; food, beverage, and ice cream, cabinets; illuminated show cases; drinking fountains; vending machines; or other similar types of equipment; each	$4.25

5. Power Apparatus

For motor, generators, transformers, rectifiers, synchronous converters, capacitors, industrial heating, air conditioning and heat pumps, cooking and baking equipment, and other apparatus, as follows:

Rating in horse power [HP], kilowatt [KW],

kilovolt-ampere [KVA], or kilovolt-Ampere-reactive [KVAR]:

Up to and including 1; each	$4.25
Over 1 and not over 10; each	$11.00
Over 10 and not over 50; each	$22.00
Over 50 and not over 100; each	$44.25
Over 100; each	$66.50

NOTES:

1. For equipment and appliances having over 1 motor, transformer, heater, etc. the combined ratings may be used.

2. These fees include switches, circuit breakers, contactors, thermostats, relays, and other directly related equipment.

6. Busways

For trolley and plug in type busways, each 100 feet, or fraction thereof;	$6.50

NOTE: An additional fee will be required for lighting fixtures, motors and other appliances that are connected to trolley and plug-in-type busways.
A fee is not required for plug in type tools.

7. Signs, Outline lighting, and Marquees

For signs, outline lighting systems or marquees supplied from one branch circuit; Each	$22.00
For each branch circuit within the same sign, outline lighting system, or marquee; Each	$4.25

8. Services

For services of 600 volts or less and not over 200 amperes in rating; Each	$27.25
For service of 600 volts or less and over 200 amperes to 1000 amperes in rating; Each	$55.50
For services over 600 volts and 1000 amperes in rating; Each	$111.00

9. Miscellaneous apparatus, Conduits, and Conductors

For electrical apparatus, conduits, and conductors for which a permit is required but for which no fee is herein set forth;	$16.25

NOTE: This fee is not applicable when a fee is paid for one or more services, outlets, fixtures, appliances, power apparatus, busways, signs or other equipment.

OTHER INSPECTIONS AND FEES

1. Plan review fees [estimated fee may be required prior to review]	25 percent of electrical permit fee

2.	Inspections outside of normal business hours per hour* [minimum charge two hours]	$47.00
3.	Reinspection fees assessed	$47.00
4.	Inspections for which no fee is specifically indicated: per hour* [minimum charge one half hour]	$47.00
5.	Additional plan review required by changes, additions or revisions to plans or to plans for which an initial review fee has been completed. per hour* [minimum charge one-half hour]:	$47.00
6.	Single family dwelling permit application deposit	$200.00
7.	Multifamily and Commercial permit application deposit	$500.00
8.	Release of Non-Compliance fee	$ 50.00
9.	A fee collected for the State of Utah for inspector training.	1% of permit fee

*Or the total hourly cost to the jurisdiction, whichever is greater. This cost shall include supervision, overhead, equipment, hourly wages, and fringe benefits of the employees involved.

E. MECHANICAL PERMIT FEES:

For issuing each permit:	$22.00
For issuing each supplemental permit.	$6.50

NOTE: These fees are not applicable when a mechanical permit is issued in conjunction with a building permit.

UNIT FEE SCHEDULE
[Note: The following do not include permit fee.]

1. Furnaces

For the installation or relocation of each forced air or gravity type furnace or burner including ducts and vents attached to such appliance, up to and including 100,000 Btu\h	$13.25
For the installation or relocation of each forced air or gravity type furnace or burner including ducts and vents attached to such appliance over 100,000 Btu\h	$16.25
For the installation or relocation of each floor furnace, including vent	$13.25
For the installation or relocation of each suspended heater, recessed wall heater or floor mounted unit heater	$13.25

2. Appliance vents

For the installation, relocation, or replacement of each appliance vent installed and not included in the application permit:	$6.50

3. Repairs and Additions

For the repair of, alteration of, or addition to each hearing appliance, refrigeration unit, cooling unit, absorption or evaporative cooling system, including installation of controls regulated by the Mechanical code:	$12.25

4. Boiler, Compressors and Absorption Systems:

For the installation, relocation of each boiler or compressor to and including three horse power, or each absorption system to and including 100,000 Btu\h [29.3kw]	$13.15
For the installation, relocation of each boiler or compressor over three horsepower [10.6kw] to and including 15 horsepower [52.7kw] or each absorption system over 100,000 Btu\h [29.3kw] to and including 500,000 Btu\h [146.6kw]	$24.25
For the installation or relocation of each boiler or compressor over 15 horsepower [52.7kw] to and including 30 horsepower [105.5kw] or absorption system over 500,000 Btu\h [146.6kw] to and including 1,000,000 Btu\h [293.1kw]	$33.25
For the installation or relocation of each boiler or compressor over 30 horsepower [105.5kw] to and including 50 horsepower [176.6kw], or absorption system over 100,000 Btu\h [293.1kw] to and including 1,750,000 Btu\h [512.9kw]	$49.50
For the installation or relocation of each boiler or compressor over 50 horsepower [176kw], or absorption system over 1,750,000 Btu\h [512.9kw]	$82.75

5. Air Handlers

For each air handling unit to and including 10,000 cubic feet per minute, Including ducts attached thereto:	$9.50

[Note: This fee does not apply to an air handling unit which is a portion of a factory- assemble appliance, cooling unit, evaporative cooler or absorption unit for which a permit is required elsewhere in the Mechanical code.]

6. Evaporative Coolers

For each evaporative cooler other than portable type:	$9.50

7. Ventilation and Exhaust

For each ventilation for connected to a single duct;	$6.50
For each ventilation system which is not a portion of a heating or air-conditioning system authorized by a permit:	$9.50
For the installation of each hood which is served by a mechanical exhaust, including the duct for such hood:	$9.50

8. Incinerators

For the installation or relocation of each domestic type incinerator;	$16.25
For the installation or relocation of each commercial or industrial type incinerator;	$66.20

9. Miscellaneous

For each appliance or piece of equipment regulated by the Mechanical Code but not classed in other appliance categories, or for which no other fee is listed in the code;	$9.50

OTHER INSPECTIONS AND FEES

1. Plan review fees: [estimated fees may be required prior to review]	25% of the mechanical permit fee
2. Inspections outside of normal business hours: per hour* [minimum charge two hours]	$47.00
3. Re-inspection fee under provisions of the code:	$47.00
4. Inspections for which no fee is specifically indicated: per hour* [minimum charge-one half hour]	$47.00
5. Additional plan reviews required by changes, additions or revisions to plans, or to plans for which an initial review has been completed: [minimum charge one half hour]	$47.00
6. A fee collected for the State of Utah for inspector training.	1% of permit fee

*Or the total hourly cost to the jurisdiction, whichever is greatest. This cost shall include supervision, overhead, equipment, hourly Wages and fringe benefits of employees involved.

F. PLUMBING PERMIT FEES

For issuing each permit:	$22.00
For issuing each supplemental permit:	$10.00

NOTE: These fees are not applicable when permit is issued in conjunction with a building permit.

UNIT FEE SCHEDULE
[NOTE: THE FOLLOWING DO NOT INCLUDE PERMIT ISSUING FEES]

1. Fixtures and Vents

For plumbing fixture or trap or set of fixtures on one trap [including water, drainage piping and backflow protection thereof:	$8.75
For the repair or alteration of drainage or vent piping fixtures;	$4.25

2. Sewers, Disposal systems and Interceptors

For each building sewer and each trailer park sewer:	$22.00
For each cesspool:	$33.25
For each private sewage disposal system:	$66.50
For each industrial waste pretreatment interceptor, its traps and vents, except kitchen type grease interceptor functioning as fixture traps:	$17.75
Rainwater systems – per drain [inside building]:	$8.75

3. Water Piping and Water Heaters

For the installation, alteration or repair of water piping or water treating equipment, or both. Each:	$4.25
For each water heater including vents:	$11.00

4. Gas Piping Systems

For each gas piping system of one to five outlets:	$5.50
For each additional outlet over five, each:	$1.00

5. Lawn Sprinklers, Vacuum Breakers and Backflow Prevention Devices

For each lawn sprinkler system on any one meter, including backflow prevention devices therefore:	$13.25
For atmospheric type vacuum breakers or backflow protection devices not included in item # 1:	
1 to 5 devices:	$11.00
Over 5 devices, each:	$2.00
For each backflow prevention device other than atmospheric-type vacuum breakers:	
2 inches [50.8mm] and smaller:	$11.00

Over 2 inches [50.8mm]:	$22.00

6. Swimming Pools

For each swimming pool or spa:

Public pools:	$81.50
Public spa:	$54.25
Private pool:	$54.25
Private spa:	$27.00

7. Miscellaneous

For each appliance or piece of equipment regulated by the Plumbing Code but not classed in any other appliance category, or for which no other fee is listed in this code:	$8.75

OTHER INSPECTIONS AND FEES

1. Plan Review Fees: [estimated fees may be required prior to review]	25 percent of the plumbing permit fee
2. Inspections outside of normal business hours: per hour*[minimum charge two hours]	$47.00
3. Reinspection fees under provisions of the code per hour* [minimum charge one hour]	$47.00
4. Inspections for which no fee is specifically indicated: Per hour* [minimum charge one half hour]	$47.00
5. Additional plan review required by changes, additions, or revisions to approved plans; per hour [minimum charge one half hour]	$47.00
6. A fee collected for the State of Utah for inspector training:	1% of the plumbing permit fee

*Or the total hour cost to the jurisdiction, whichever is greatest. This cost shall include supervision, overhead, equipment, hourly wages and fringe benefits of the employees involved.

3. <u>Business License Fees:</u>

A. General Businesses	$50.00, plus $25.00 for each employee over one ($500.00 maximum)
B. Alcohol Retailer License	$300.00
C. Temporary Licenses: Canvasser, Solicitors, and Other Itinerant Merchants	
1. Pawn Broker, swap meets, secondhand dealers*	$50.00, plus $25.00 for each employee over one ($500.00 maximum)
2. Exhibition or Performances	$100.00 per 24 hour period
3. Carnival or Circus*	$300.00 per day, plus $75.00 per week per ride
4. Dance Hall	$100.00 per year

5. Itinerant (transient)	$100.00 per year, plus $35.00 for each employee over one
6. Junk Dealer*	$100.00 per year
7. Auctioneer*	$100.00 per year or $25.00 per day
8. Arts & Craft exhibits*	$35.00 annual fee, plus $100.00 per exhibit ($400.00 maximum)

* See ordinance for special restrictions.

4. Community Development:

A. Master Development:

1. Master Development Plan Application	$12,000.00
2. Amendment to an Approved Master Development Plan	$2,500.00

B. Rezoning Request:

1. If required with a Master Development Plan Submittal	$200.00 for 1st acre, plus $50.00 per acre or portion thereof
2. All other rezoning requests	$500.00 for 1st acre, plus $50.00 per acre or portion thereof

C. General Plan Amendment	$1000.00
D. Code Amendment	$500.00

E. Conditional Use:

1. Conditional Use-Home Occupation (staff review only)	$250.00
2. Conditional Use-Home Occupation (Planning Commission and City Council review required)	$350.00
3. Conditional Use-All other	$500.00

F. Subdivisions:

1. Subdivision Concept Plan Review	$500.00, plus $50.00 per lot
2. All other Concept Plan Review	$500.00 or $15.00 per unit, whichever is greater
3. Neighborhood Development Plan Review-Single Family	$150.00 plus $25.00 per lot
4. Neighborhood Development Plan Review-Multi-Family	$500.00 or $15.00 per unit, whichever is greater
5. Preliminary Plat	$500.00, plus $100.00 per lot up (Residential) $1000.00, plus $100.00 per lot for (Commercial), $500.00 plus $150.00 per lot (Sensitive lands)
6. Minor Subdivision	$750.00, plus $100.00 per lot
7. Plat Amendment	$500.00, plus $50.00 per lot
8. Final Plat	$400.00 plus $75.00 per lot up to two reviews $200.00, plus $40.00 per lot for subsequent reviews
9. Lot Line Adjustment	$300.00
10. Street/Open Space Dedication Plat	$500.00
11. Plat Vacation/Closure	$500.00
12. Zoning Compliance Letter	$50.00
13. Newspaper Public Notice Fee	$75.00 per advertisement+

14. Recording Fee — Current fee charged by Utah County Recorder

15. Inspection Fees: (Based on Engineer's Calculation of the total bond amount (115%) prior to any bond releases or reductions that may be authorized before the posting of the final bond amount)

a.	$1.00 to $50,000	5%
b.	$50,001 to $250,000	$2500.00, plus 2 ½% of remaining balance greater than $50,000, but not more than $250,000.
c.	$250,001 to $500,000	$7500.00, plus 2% of remaining balance greater than $250,000, but not more than $500,000.
d.	Over $500,001	$11,250.00, plus 1% of remaining balance greater than $500,000

G. Site Plan Review Fees:

1. Residential Site Plan Review Fee — $60.00 per dwelling unit or $5,000.00, whichever is less
2. Non-Residential Site Plan Review Fee — $5,000.00

H. Annexation Application Fee — $500.00 + $50.00 per acre

I. Signs:

1.	Permit Fee (Staff Review Only)	$100.00
2.	Permit Fee (Planning Commission Review Required)	$250.00
3.	Temporary and Special Event Sign Deposit Fee*	$50.00
4.	Development Information Sign	$300.00
5.	Development Information Sign Panel	$50.00
6.	Development Information Sign Renewal	$50.00
7.	Permanent Sign Permit	$150.00 (Staff review), $300.00 (Planning Commission Review)
8.	Model Home/Sales Office Sign	$150.00
9.	Impound Release Fee	$150.00 per sign

* See sign ordinance for definition and regulations

J. Streets- Street dedication or vacation — $2000.00

K. City Council/Planning Commission Appeal — $ 300.00

L. Board of Adjustment:

1. Variance — $500.00
2. Appeal of Interpretations by Zoning Administrator — $500.00

5. New Installations or New Business.

New installations, alterations, plan review with inspections

(A) Automatic Fire Sprinkler:

(1) Inspection of plan(s), one visual inspection and one test for sprinkler or suppression system from 100 up to 10,000 square

feet in area ..... $ 109.00
(2) Reinspection ..... $ 38.00

(B) Automatic Fire Suppression (Hood and Duct System) Per System:
(1) Inspection of plan(s), one visual inspection and one test for a fire suppression system that is installed ..... $ 109.00
(2) Reinspection ..... $ 38.00

(C) Standpipe and Basement Pipe Inlet Systems:
(1) Inspection of plan(s), one visual inspection and one test for a fire standpipe or pipe inlet system that is installed ..... $ 109.00
(2) Reinspection ..... $ 38.00

(D) Fire Alarm System:
(1) Inspection of plan(s), one visual inspection and one test for a fire alarm system from 100 to 10,000 square feet ..... $ 109.00
(2) Reinspection ..... $ 38.00

(E) Carnivals, Fairs, and Temporary Uses:
(1) Inspection of plan(s), one visual inspection with an area of 1 acre or less ..... $ 71.00
(2) Over 1 acre per hour ..... $ 38.00
(3) Reinspection ..... $ 38.00

(F) Combustible Material Storage:
(1) Inspection of the plan(s), one visual inspection of aisles and test sprinkler or suppression system that is installed for storage totaling no more than 2,500 cubic feet ..... $ 71.00
(2) Over 2,500 Cubic feet per hour ..... $ 38.00
(3) Reinspection ..... $ 38.00

(G) Flammable and Combustible Liquid Vessel, Above-Ground and Underground: Outside or Within Structure:
(1) Inspection of plan(s), one visual inspection of electrical systems, clearances, liquid spill protection, galvanic protection, ventilation, explosion control and testing of tightness (per unit) ..... $ 109.00
(2) Reinspection ..... $ 38.00

(H) Liquid Petroleum Gas Vessel, Above-Ground and Underground:
(1) Inspection of plan(s), one visual inspection of clearances, galvanic protection and testing of tightness as per R710-7, Utah State Fire Marshall Laws, rules and Regulations ..... $ 54.00
(2) Reinspection ..... $ 38.00
(3) Each additional tank at same site ..... $ 20.00

(I) Flammable and Combustible Liquid or Gas Dispensing (Except Motor Fuels):
(1) Inspection of plan(s), one visual inspection of electrical systems including grounding, clearances, liquid spill protection, ventilation and explosion control per dispensing area ..... $ 71.00
(2) Reinspection ..... $ 38.00

(J) Motor Fuel Dispensing Station:
(1) Inspection of plan(s), one visual inspections and one test for

tightness of the tank(s) and piping..... $ 109.00
(2) Reinspection..... $ 38.00

(K) Flammable and Combustible Liquid and Solid Mixing or Blending:
(1) Inspection of plan(s), one visual inspection of electrical systems including grounding, clearances, liquid spill protection, ventilation and explosion control per dispensing area..... $ 109.00
(2) Reinspection..... $ 38.00

(L) Repair Garages, Automotive Spray Booths and Aircraft Hangers:
(1) Inspection of plan(s), one visual inspection of electrical systems, clearances, storage practices, storage of flammable and combustible materials..... $ 109.00
(2) Reinspection..... $ 38.00

(M) Site Plan Reviews:
(1) Single family dwelling..... $ 54.00
(2) Duplexes, Multi-family dwelling, Planned unit development and apartments..... $ 71.00
(3) Commercial (minimum) ..... $ 32.00

(N) Salvage, Wrecking and Impound Lots:
(1) Inspection of plan(s), one visual inspection for compliance to adopted fire codes..... $ 109.00
(2) Reinspection..... $ 38.00

(O) Fireworks Displays in Permanent Structures, Temporary Firework Tent Stands and Temporary Firework Stands:
(1) Inspection of plan(s), one visual inspection for compliance to adopted Fire Codes..... $ 54.00
(2) Reinspection..... $ 38.00

2. <u>Inspection of Existing Occupancies, Systems and Permits:</u>

(A) Automatic Fire Sprinkler System(s), Per System(s):
(1) Inspection and one test for sprinkler system from 100 up to 10,000 square feet in area ..... $ 76.00
(2) Over 10,000 Square feet, x $0.02..... $
(3) Each reinspection shall be charged at a rate of 75% of the total cost as calculated above..... $ 57.00

(B) Basic Fire Inspection:
(1) Preschool, home daycare with one reinspection ..... $ 57.00
(2) All other classifications ..... $ 57.00
(3) Each reinspection shall be charged at a rate of 75% of the total cost as calculated above..... $ 42.00

(C) Combustible Material Storage:
(1) Basic fire inspection, visual inspection for compliance to adopted Fire Codes..... $ 57.00
(2) Each reinspection shall be charged at a rate of 75% of the total cost as calculated above..... $ 42.00

(D) Dry-Cleaning Plants:
(1) Basic fire inspection, visual inspection for compliance to adopted Fire Codes..... $ 57.00
(2) Each reinspection shall be charged at a rate of 75% of the total cost as calculated above..... $ 42.00

(E) Dust -Producing Operations (Grain Elevator, Flour Starch Mill or Plant Pulverizing Aluminum, Coal, Magnesium, Spices, Coca, Sugar, or Other Operation Producing Dusts as Defined in the International Fire Code and NFPA):

(1) Basic Fire inspection up to 10,000 square feet in area ..... $ 76.00

(2) Over 10,000 square feet in area, total square feet x $0.02 plus basic fire inspection fee..... $

(3) Each reinspection shall be charged at a rate of 75% of the total cost as calculated above ..... $ 57.00

(F) Fire Hydrants, Test for Residual, Static Pressures and Gallons Per Minute

(1) Per Unit..... $ 95.00

(G) Fire Alarm Systems:

(1) Inspection of plan(s), one visual inspection up to 10,000 square feet ..... $ 71.00

(2) Over 10,000 square feet in area, total square feet x $0.02 plus basic fire inspection fee..... $

(H) Flammable and Combustible Vessel, Above-Ground and Belowground:

(1) Visual inspection of electrical system, clearances, liquid spill protection, galvanic protection, ventilation, explosion control and testing of tightness of piping ..... $ 71.00

(2) Reinspection ..... $ 38.00

(I) Liquid Petroleum Gas Vessel, Above-Ground and Underground:

(1) Visual inspection of clearances, liquid spill protection, galvanic protection and testing of tightness as per R710-7, Utah State Fire Marshall Laws, Rules and Regulations ..... $ 38.00

(2) Reinspection ..... $ 38.00

(J) Flammable and Combustible Liquid Vessel Within a Structure:

(1) Visual inspection of electrical systems, clearances, liquid spill protection, galvanic protection, explosion control, ventilation and testing of piping for compliance to adopted Fire Codes ..... $ 76.00

(2) Reinspection ..... $ 38.00

(K) Flammable and Combustible Liquid Piping Within a Structure, Above-Ground and Underground:

(1) Visual inspection of electrical systems, clearances, galvanic protection, ventilation, explosion control and testing of tightness of piping ..... $ 76.00

(2) Reinspection ..... $ 38.00

(L) Flammable and Combustible Liquid and Gas Dispensing Includes Motor Fuel Dispensing Stations:

(1) Visual inspection of electrical systems, clearances, galvanic protection, ventilation, explosion control and testing of tightness of piping per dispensing area ..... $ 76.00

(2) Reinspection / per dispensing area ..... $ 38.00

(M) Flammable and Combustible Liquid and Solid Mixing or Blending:

(1) Visual inspection of electrical systems, clearances, ventilation, explosion control and liquid spill per area ..... $ 76.00

(2) Reinspection per area ..... $ 38.00

(N) Fumigation or Thermal Insecticidal Fogging:

(1) To operate a business of fumigation or thermal insecticidal fogging and to maintain a room, vault or chamber in which a toxic or flammable fumigant is used ..... $ 76.00

(2) Reinspection per area ..... $ 38.00

(O) Salvage, Wrecking and Impound Lots:

(1) Inspection of plan(s), one visual inspection for compliance to adopted fire codes ..... $ 92.00

(2) Reinspection ..... $ 38.00

(P) Lumber Storage :

(1) Under 100,00 board feet. Visual inspection of electrical systems, fire access roads, ducts, ventilation and explosion control, fire alarms, fire sprinklers and hydrants ..... $ 76.00

(2) Over 100,000 board feet(total board feet x $0.02 plus initial Inspection fee ..... $ 38.00

(Q) Refrigeration System(s):

(1) Visual inspection of electrical systems, clearances, ducts, ventilation and explosion control, testing alarms and equipment, storage of flammable and combustible materials and all compliance records ..... $ 76.00

(2) Reinspection ..... $ 38.00

6. EMS Services

a. Intermediate..... $752.00
b. Paramedic Ground Ambulance $1,100.00
c. Paramedic Reimbursement $234.71
d. Mileage Rate (standard)..... $31.65
1. Diesel-when it exceeds $5.10 ..... $0.25
2. Gasoline-when it exceeds $4.25 ..... $0.25
e. Surcharge-Off road (per mile traveled) $1.50
f. Special Provisions (hourly waiting time) $22.05

7. Police Department:

A. Accident Reports.....$ 6.00
B. Insurance Letter.....$ 10.00
C. Police Clearances.....$ 8.00
D. Fingerprints (2 cards) additional $5.00..... $ 10.00

8. Utility Rates and Fees:

A. Excavation Permits, Asphalt/Concrete Cuts/Unimproved Surface:

1. Minimum fee for cuts in paved surfaces more than 3 years old $200.00
2. Minimum fee for cuts in paved surfaces 3 years old or less $800.00
3. Cutting into City Road or Utility without Permit $1,000.00 per occurrence

B. Grading Permits:

1. Regular Grading Permit Plan Review Fees (less than 1,000 cubic yards) $0.00
2. Engineered Grading Permit Plan Review Fees (greater than 1,000 cubic yards) $500.00, plus $50.00 per acre
3. Inspection Fees: Based on Engineer's Calculation of the total estimated cost of the proposed work or improvements plus contingency (115%)
   a. $1.00 to $50,000 5%
   b. $50,001 to $250,000 $2,500.00, plus 2 ½% of remaining balance greater than $50,000, but not more than $250,000.
   c. $250,001 to $500,000 $7,500.00, plus 2% of remaining balance greater than $250,000, but not more than $500,000.
   d. Over $500,001 $11,250.00, plus 1% of remaining balance greater than $500,000

~~B.~~C. Water Rates Service Fees:

1. Deposit $120.00
2. Minimum Monthly Charge $15.08
3. Monthly Usage Rate $1.55 per 1000 gallons
4. Construction Water Fee $100.00
5. Hydrant Meter Deposit $1500.00

Formatted: Indent: Left: 1", No bullets or numbering

Formatted: Left, Numbered + Level: 2 + Numbering Style: 1, 2, 3, … + Start at: 1 + Alignment: Left + Aligned at: 0.75" + Tab after: 1" + Indent at: 1", Tab stops: 4.5", Left

Formatted: Left, Indent: Left: 1", No bullets or numbering, Tab stops: 4.5", Left

Formatted: Left, Numbered + Level: 2 + Numbering Style: 1, 2, 3, … + Start at: 1 + Alignment: Left + Aligned at: 0.75" + Tab after: 1" + Indent at: 1", Tab stops: 4.5", Left

Formatted: Indent: Left: 1", Numbered + Level: 1 + Numbering Style: a, b, c, … + Start at: 1 + Alignment: Left + Aligned at: 0.6" + Tab after: 1" + Indent at: 1", Tab stops: 1.4", List tab + Not at 1"

Formatted: Indent: First line: 0", Numbered + Level: 1 + Numbering Style: a, b, c, … + Start at: 1 + Alignment: Left + Aligned at: 0.6" + Tab after: 1" + Indent at: 1"

Formatted: Indent: First line: 0", Numbered + Level: 1 + Numbering Style: a, b, c, … + Start at: 1 + Alignment: Left + Aligned at: 0.6" + Tab after: 1" + Indent at: 1"

Formatted: Indent: First line: 0", Numbered + Level: 1 + Numbering Style: a, b, c, … + Start at: 1 + Alignment: Left + Aligned at: 0.6" + Tab after: 1" + Indent at: 1"

Formatted: Indent: First line: 0", Numbered + Level: 1 + Numbering Style: a, b, c, … + Start at: 1 + Alignment: Left + Aligned at: 0.6" + Tab after: 1" + Indent at: 1"

Formatted: Indent: Left: 0.5", No bullets or numbering

6. Hydrant Meter Usage Rate	$1.33 per 1000 gallons
7. Water Theft	$500.00
8. Tampering Fee	$500.00
9. Meter Connection Fees:	
a. Single Family Residential (meter-5/8" or ¾")	$600.00
b. 1" Meter	$700.00
c. 1 ½" Meter	$975.00
d. 2" Meter	$1,875.00

10. All water used for construction or prior to occupancy shall be properly metered. A $500.00 fine for each offense shall be assessed to any person, contractor, developer, company or other party using un-metered water, an unauthorized jumper connection, or who uses municipal water without an approved water meter.

~~C.~~D. Sewer Rate and Fees:

1. Minimum Monthly Charge	$15.99
2. Monthly Usage Rate water used	$2.88 per 1000 gallons culinary
3. Single Family Residential Connection Fee (Impact Fee Additional Where Applicable)	$350.00
4. Commercial, Industrial, or Multi Family Connection Fee	Estimated Cost of Connection
5. (Impact Fee Additional Where Applicable)	plus 15% Administration Fee
6. Timpanogos Special Service District Sewer Fee	$2480.00 per ERU

~~D.~~E. Pressurized Irrigation (Secondary Water) monthly fee is $15.37/per ¼ acre.

~~E.~~F. Storm Drain:

1. Minimum Monthly Charge	$4.45 per ERU
~~F.~~G. Garbage Can Rates	$11.46 for 1st can, $6.50 for each additional
~~G.~~H. Recycle Can Rates	$5.20 for each can
~~H.~~I. Utility Delinquency Fees	$15.00 after 60 days from due date, ~~(shut off)~~ (with a minimum balance of $25)
~~I.~~J. Utility User Reconnect Fee	First - $25.00, Second - 50.00, Subsequent - $100.00 ea

9. Miscellaneous Fees:

a. City Pavilion reservation fee	$25.00
b. City Pavilion booking fee (non refundable portion of reservation fee in the case of cancellation of reservation)	$10.00
c. Non-Resident Marina Annual Pass	$75.00
d. Resident Marina Annual Pass	$50.00
e. Street Light Lockable Fuse Box	$230.00 per box

PAYMENT OF CHARGES, REIMBURSEMENT FOR PROFESSIONAL FEES, AND COLLECTION, OF PAST DUE ACCOUNTS

This section amends, enacts new provisions and restates and consolidates prior resolutions of the Governing Body of the City of Saratoga Springs and clarifies the requirements for collection of facilities,

construction payments, past due accounts and other remedies to collect past due accounts from development applicants and others.

. As additional fees for development review and approval, each development applicant shall be responsible to reimburse the City of Saratoga Springs for all excess fees and charges plus 10% administrative costs incurred by the City of Saratoga Springs in the review and processing of the development applications for subdivision, site-plan review, building permit, master development plan (original or amended) or other development review. Existing application fees stated above payable by applicants include reasonable monetary charges for professional services required to the City to review and process the developers application, however, if the project or development review requires more professional or other third party services than anticipated and provided for in the original application fee, the developer shall be responsible to reimburse the City for the excess reasonable fees and charges incurred in the review, processing and compliance assurance required by the City to complete consideration of the developers application. Such fees and charges shall accrue to, and are payable by, the development entity which executes the development application, or enters into a development agreement with the City of Saratoga Springs as required under the City Development Code.

The City shall bill developers for excess reimbursable fees accruing under paragraph A above and all other charges on a regular basis within forty-five (45) days of the payment of such reimbursable fees and/or accrual of other charges to the developer by the City. The billing by the City shall be in reasonable detail to permit the developer applicant to determine the reason for the expenditure, the project for which the fees or charges were incurred, and the rate or other basis for the reimbursement or other charge. Billings for reimbursable fees are due upon receipt and if the balance due is not paid within thirty (30) days of mailing, the developer applicant account is delinquent and the developer applicant is in default on its reimbursement fee obligations to the City. Every billing statement from the City to a developer shall be deemed correct, accurate, undisputed and due in full unless the City Treasurer is notified in writing of a disputed bill in reasonable detail to ascertain the exact question or matter in dispute within thirty (30) days of the postmarked date on the mailed statement or the date of hand-delivery if the statement is not delivered through the U.S. Mail.

Developer/applicants, or their representatives, may informally confer with City staff to obtain further information, ask questions, and receive clarification of charges included on the billings. An informal conference may result in changes to the invoice from the City to the developer applicant.

If the developer applicant does not dispute the billing, request information and engage in an informal conference with staff concerning the billing, the invoice shall be due thirty (30) days from the date of the invoice. Billed invoices shall be due and payable to the City thirty (30) days from the date of the invoice in the case of undisputed invoices and fifteen (15) days after receipt of a corrected invoice in the case of an invoice corrected after an informal conference or corrected after a decision by the City Council.

Developer/applicants must remain in good standing with all amounts due and payable to the City paid as such amounts become due. Developer/applicants who are delinquent in payment of reimbursable fees and charges to the City, or other charges to the City, are deemed to be in default and the processing of all applications before the City staff, Planning Commission or City Council may be tabled until the developer applicant's default is cured by the timely payment of all fees and charges or the execution of an agreement for the payment of all fees and charges acceptable to the City Treasurer or Administrator. Except as provided below, City staff are specifically instructed to verify that each developer/applicant is in good standing with respect to all fees and charges owed to the City before presenting development applications to the Planning Commission agenda or to the City Council agenda, and specifically before recordation of plats or final signing and approval of site-plans, building permits, or other development approval applications.

Utility customer's accounts are due and payable within thirty (30) days of the date of the utility billing. Utility customers, who do not pay the full amount of the utility billing invoice within thirty (30) days, are in default and are subject to disconnection of utilities and collection of the delinquent amounts. This section describes the process for notice to utility customers of billing delinquency, terminating service, collection of reconnection fees, and provisions for deferred payments schedule contracts.

Each utility invoice not paid when due shall be considered delinquent and the delinquent utility customer shall be provided a delinquent account notice requiring payment in full within seven (7) days of the date of the notice of the full past due amount.

In the event payment in full is not received within the seven (7) day delinquent account notice period, a termination of service/shutoff notice will be issued stating the date service will be discontinued for nonpayment if delinquent payments are not received by the City. Utility customers are invited to contact City staff during the seven (7) day delinquent account notice period to arrange a deferred payment schedule, which may be approved by the City as provided below.

Services terminated for non-payment of delinquent accounts shall not be reinstated until payment of the delinquent account is received or an acceptable deferred payment contract is approved by the City and the initial payment required under the deferred payment schedule is received by the City together with the reconnect fee to reimburse the City for the services necessary to reinstate the utility service.

A deferred payment schedule contract may be entered with a delinquent customer, provided that the deferred payment schedule does not extend for a period of more than one (1) year, provides for a specific amount to be paid each month together with interest as provided below. Utility customers who do not comply with the terms of an executed deferred payment schedule contract, are subject to termination of service after the City provides the delinquent account notice and the shutoff notices provided above. Service terminated after default on a deferred payment contract form shall not be reinstated until the entire past due amount is paid in full and a deposit as collateral for all future service is received by the City in an amount equal to three (3) times the average monthly billing for the service in consideration.

All bills for utility service, invoices for reimbursable fees or other charges owned to the City of every kind and nature except for returned checks, shall bear interest at the rate of 1.5% per month on the unpaid balance due.

Each check or other instrument tendered to the City for payment of an obligation to the City and returned to the City as a dishonored instrument shall accrue the maximum penalty, services charges and other allowable fees for recovery of the amount due allowed by Utah law.

<u>The city will establish a utility deposit of $120.00 for all new utility customers. The deposit will be applied to the account after 12 months of continuous non-delinquent history. In the event of a non-payment shut off, the deposit will be applied to the account and a new deposit will be required before service is reestablished.</u>

9. OTHER FEES

It is not intended by this Resolution to repeal, abrogate, annul, or in any way impair or interfere with existing provisions of other resolutions, ordinances, or laws except to effect modification of the fees reflected above. The fees listed in the Consolidated Fee Schedule supersede present fees for services specified, but all fees not listed remain in effect. Where this Resolution imposes a higher fee than is imposed or required by existing provisions, resolution, ordinance, or law, the provisions of this resolution shall control.

***Updated August 2013**

ORDINANCE NO. 14-17 (6-17-14)

AN ORDINANCE OF THE CITY OF SARATOGA SPRINGS, UTAH, AMENDING THE STANDARD TECHNICAL SPECIFICATIONS AND DRAWINGS MANUAL FOR THE CITY OF SARATOGA SPRINGS AND ESTABLISHING AN EFFECTIVE DATE

WHEREAS, on April 29, 2014, the City Council of the City of Saratoga Springs last adopted updates the Engineering Standards and Specification manual; and,

WHEREAS, the City needs to have current standards and specifications with respect to the development and installation of public improvements; and,

WHEREAS, the City Council has determined that it is in the best interest of the public health, safety, and welfare that the attached modifications and amendments to the City's Standard Technical Specifications and Drawings be adopted.

NOW THEREFORE, the City Council of the City of Saratoga Springs, Utah does hereby ordain as follows:

SECTION I – ENACTMENT

The amendments to City's Standard Technical Specifications and Drawings attached as Exhibit A, incorporated herein by this reference, are hereby enacted.

SECTION II – AMENDMENT OF CONFLICTING ORDINANCES

If any ordinances, resolutions, policies, or zoning maps of the City of Saratoga Springs heretofore adopted are inconsistent herewith they are hereby amended to comply with the provisions hereof. If they cannot be amended to comply with the provisions hereof, they are hereby repealed.

SECTION III – EFFECTIVE DATE

This ordinance shall take effect upon its passage by a majority vote of the Saratoga Springs City Council and following notice and publication as required by the Utah Code.

SECTION IV – SEVERABILITY

If any section, subsection, sentence, clause, phrase, or portion of this ordinance is, for any reason, held invalid or unconstitutional by any court of competent jurisdiction, such provision shall be deemed a separate, distinct, and independent provision, and such holding shall not affect the validity of the remaining portions of this ordinance.

SECTION V – PUBLIC NOTICE

The Saratoga Springs Recorder is hereby ordered, in accordance with the requirements of Utah Code §§ 10-3-710—711, to do as follows:

a. deposit a copy of this ordinance in the office of the City Recorder; and
b. publish notice as follows:
   i. publish a short summary of this ordinance for at least one publication in a newspaper of general circulation in the City; or
   ii. post a complete copy of this ordinance in three public places within the City.

ADOPTED AND PASSED by the City Council of the City of Saratoga Springs, Utah, this __ day of _____, 2014.

Signed: _____
Jim Miller, Mayor

Attest: _____ _____
Lori Yates, City Recorder Date

VOTE

Shellie Baertsch _____
Rebecca Call _____
Michael McOmber _____
Bud Poduska _____
Stephen Willden _____

EXHIBIT A

Code Amendments

* * * * *

8.01.03. All New Developments to Receive Culinary Water Service from City Water System; Providing Water Rights and Facilities for Annexation and Development Applications.

1. All property developed within the corporate limits of the City after the adoption of this ordinance shall receive its culinary water service from the City Water System.

2. All property annexed to the City and all property already within the boundaries of the City for which the owner initiates an application for development approval or subdivision or site plan approval shall provide to the City—for the City Water System—the water rights and culinary water source, necessary treatment facilities and storage capacity ("waterworks"), and culinary water and secondary water or pressurized irrigation transmission and distribution system capacity ("distribution systems") sufficient to satisfy the existing and future uses and occupants to be supplied by the City Water System in accordance with the City of Saratoga Springs Design Standards and Public Improvement Specifications. The Design Standards and Public Improvement Specifications shall require water rights, water sources, and waterworks capacity sufficient to meet the municipal needs that will, in part, be created by the development of the property being annexed or developed in addition to the specific needs of the property being developed or to be developed.

3. For each parcel of property proposed for development under the prevailing zoning ordinance of the City, the owner shall be required to ~~transfer~~ secure water rights in the following quantities to the City of Saratoga Springs:

~~3.~~

a. For each ~~one-half of a~~ net irrigable acre, or portion thereof, irrigation water rights ~~to~~in an equivalent amount of ~~one acre~~3.13 acre-feet ~~foot~~ shall be donated ~~to~~to, or secured from the City, at or prior to the time of recording of said parcel with the Utah County ~~r~~Recorder. For the purposes of this ordinance, a "net irrigable acre" is defined as~~,~~ the total square footage of land remaining within a specific lot or plat after deleting 65 ~~percent~~ % of the area dedicated for rights-of-ways~~s~~, ~~oadway easements and~~ ~~ten~~ 46 ~~percent~~ % of the ~~square footage~~area of the lots, and 90% of the area dedicated for open space.

~~a.~~b. For each parcel of property proposed for development under the prevailing zoning ordinances in the City, where the net irrigable acreage can be determined from landscaping plans, the net irrigable acreage shall be defined as the total square footage of land remaining after deleing all impervious surfaces such as pavement, buildings, and sidewalks.

Formatted: No bullets or numbering, Tab stops: Not at 0.5"

Formatted: Indent: Left: 1", No bullets or numbering, Tab stops: Not at 1"

Formatted: Tab stops: Not at 0.75"

~~b. In cases where the City allows culinary water connections to be purchased in order to meet the adopted secondary water requirements, the required number of water connections per net irrigable acre that must be purchased shall be seven.~~

(Ord. 11-9; Ord. 08-16)

c. For each residential unit to be constructed under the prevailing zoning ordinance of the City within any development, water rights ~~to~~in an amount equal to ~~an equivalent of one-half~~ 0.45 acre-~~-~~f~~oo~~eet of culinary water shall be donated to or secured from the City at or prior to the time of recording of said parcel with the Utah County ~~r~~Recorder.

d. For commercial, institutional, industrial, or other proposed uses of ~~a~~ non-residential development, water shares in an amount equal to 0.45 acre-feet of culinary water shall be donated to or secured from the City according to Subsections (3)(a) and (3)(b) ~~with~~ for each ~~residential~~ equivalent residential ~~units~~ connection ("ERC") or portion thereof rounding up to the nearest whole number. For the purposes of this ordinance, an ERC shall be defined as the equivalent of 40 water supply fixture units ("WSFU") ~~for such commercial, industrial, or similar use being defined by~~based on ~~State and~~ a fixture count that shall be performed at the issuance of the Building Permit. The fixture count shall be based on the International Plumbing Code ("IPC")~~,~~ issued by the International Code Council.

~~d. City regulations.~~

4. For each parcel of property proposed for development under the prevailing zoning ordinance of the City, where the City Engineer has determined ~~unique circumstances exis~~that there is empirical data to indicate that the proposed development~~t which~~ may require water usage above ~~and beyond~~or below that required in (3)(a)–(3)(~~e~~d) above, the owner shall be required to transfer water rights in quantities determined by the City Engineer based on such empirical data.

5. The conveyance of such water rights, water sources, waterworks—including the land on which the waterworks are located—and distribution systems to the City for the City Water System, or arrangement for the future completion and conveyance to the City as accepted by the City in writing, shall be a condition precedent to annexation or development approval.

6. Where an annexation contains property which is being annexed without the consent of the owner, the City may elect to not require the conveyance of water rights, water sources, waterworks, and distribution systems at the time of annexation as long as the annexation resolution or ordinance annexing the property specifically identifies such parcels and provides that the City will require the conveyance of water rights, water sources, waterworks, and distribution systems prior to any approval for the development of those parcels.

Formatted: Tab stops: Not at 1"

Formatted: Font: (Default) Times New Roman, 12 pt

Formatted: Font: (Default) Times New Roman, 12 pt

Formatted: Font: (Default) Times New Roman, 12 pt

Formatted: Font: (Default) Times New Roman, 12 pt

Formatted: Font: (Default) Times New Roman, 12 pt

Formatted: Font: (Default) Times New Roman, 12 pt

Formatted: No bullets or numbering, Tab stops: Not at 1"

7. Prior to acceptance of water rights, the City shall evaluate the rights proposed for conveyance and may refuse to accept any right that it determines to be insufficient in annual quantity or rate of flow or has not been approved for change to municipal purposes within the City or has not been approved for diversion from City-owned waterworks by the State Engineer.
    a. In determining the quantity of water available under the water right requirements, the City will evaluate the priority of the water rights and the historic average quantities of water available to the water rights as determined by the State Engineer.
    b. The City will require an ~~application for~~ approval of the change of use or change of point of diversion, as applicable, ~~with~~from the State Engineer in order to quantify and verify the water rights.
    c. Prior to acceptance of water sources, water works, distribution systems, and associated property and easements, the City shall be satisfied as to the title to all associated property and easements, ~~and~~ may require title insurance or other evidence of title, and shall inspect the water sources, waterworks, and distribution systems to assure that the same have been constructed in accordance with the Engineering ~~Design~~ Standard~~s~~ Technical Specifications and Drawings ~~and Public Improvement Specifications~~ and are in good working order.
    d. Such acceptance shall only be official upon writing notification from the City.

8. The City may assist in the development of water sources, waterworks, and distribution systems for the City Water System of a size and on a scale that will maximize the available water supplies and take advantage of economies of scale.
    a. The City may use resources it has available to the City or it may use its bonding ability to help finance the same, including, where appropriate, the formation of special improvement districts or other appropriate entities; provided, however, that to the extent that the City pays for the development of water sources, waterworks, or distribution capacity, it shall not provide the same to any party without compensation for the same at least equal to the reimbursement of the costs incurred by the City.
    b. Where property owners are required to advance the costs for development of water sources, waterworks, and distribution systems for the City Water System, the City may acquire the same from the developers by provisions for development credits to be used by the developer or sold to others or by any other appropriate means allowed by law.
    c. The City may acquire less than all of a water source, waterworks, or distribution system, provided that the City shall have control of the same and the revenues therefrom shall be divided proportionately to the interests of the parties.

(Ord. 11-9; Ord. 08-12, Ord. 98-0813-001, Ord. 98-0625-1942, Ord. 98-0112-1)

* * * * *

City Council
Staff Report

Author: Jeremy D. Lapin, P.E., City Engineer
Subject: Engineering Standards and Specifications
Date: June 17, 2014
Type of Item: Adoption of Updated Engineering Standards

Description:

A. Topic:

This item is for the approval of the proposed update to the Engineering Standards and Specifications Manual.

B. Background:

The City's engineering technical specifications and drawings manual provides requirements for the use of materials, products and services to be used by developers and contractors in the construction of public infrastructure.

C. Analysis:

Since the current version of the City's Engineering Standards and Specifications was adopted by the City Council in May of 2013, the Engineering Department has compiled recommended updates based on field experience, manufactures recommendations, and experts in various fields of construction. Many of the proposed updates serve to clarify contradictory or unclear aspects in the current version while other revisions are proposed to enhance the quality and reduce the long term maintenance liability of the infrastructure the City inherits through development activities. Overall Staff has made an effort to simplify the text by removing redundant specifications or sections that were no longer necessary.

Recommendation: I recommend that the City Council approve the proposed update to the Engineering Standards and Specifications.

STANDARD
TECHNICAL SPECIFICATIONS
AND DRAWINGS
FOR
CITY OF SARATOGA SPRINGS, UTAH

UPDATED
JUNE 6, 2014

CITY OF SARATOGA SPRINGS ENGINEERING DEPARTMENT
1307 N. Commerce Drive, Suite 200
Saratoga Springs, Utah 84045
Phone: (801) 766-9793
Fax: (801) 766-9794

TABLE O□ CONTENTS

DI□ISION □□ □DESIGN STANDARDS

00500 - DESIGN STANDARDS

DI□ISION □□ □GENERAL RE□UIREMENTS

01300 - ADMINISTRATIVE REQUIREMENTS
01400 - QUALITY REQUIREMENTS
01600 - PRODUCT REQUIREMENTS
01700 - EXECUTION REQUIREMENTS
01780 - CLOSEOUT SUBMITTALS

DI□ISION □□ □SITE CONSTRUCTION

02100 - ROADWAY AND GENERAL EARTHWORK
02112 - TRENCHING FOR PIPE WORK
02115 - STRUCTURAL EXCAVATION
02116 - FILL AND BACKFILL
02235 - SANITARY SEWER SYSTEM
02335 - STORM DRAIN SYSTEM
02340 - MANHOLES AND COVERS
02350 - STORM WATER TREATMENT SYSTEM
02355 - STORM WATER DETENTION PONDS
02410 - WATER DISTRIBUTION SYSTEM
02412 - PRESSURE REDUCING VALVE STATION
02414 - WATER METER VAULT
02415 - DISINFECTION OF WATER DISTRIBUTION SYSTEM
02416 - AIR-VACUUM VALVE STATION
02580 - SECONDARY WATER SYSTEM
02586 - BACKFLOW PREVENTER STATION
02587 - SERVICE WATER BACKFLOW PREVENTOR STATION
02621 - GRAVEL SURFACING AND ROAD BASE
02631 - GEOGRID
02641 - BITUMINOUS PAVING
02651 - BITUMINOUS, TYPE II SEAL COAT
02652 - CONCRETE STREET IMPROVEMENTS
02724 - AUTOMATIC SPRINKLING SYSTEM
02725 - RESTORING WETLANDS AREAS
02726 - LANDSCAPING
02727- RESTORING NATIVE AREA
02821 - FENCES AND GATES
02828 - MISCELLANEOUS EQUIPMENT FOR PLAYGROUNDS AND OTHER AREAS

DI□ISION □□ □CONCRETE

03300 - CAST-IN-PLACE CONCRETE

DI□ISION □□ □□INISHES

04900 - PAINTS AND COATINGS

DI□ISION □□ □ELECTRICAL

05060 - GROUNDING AND BONDING
05070 - HANGERS AND SUPPORTS
05075 - ELECTRICAL IDENTIFICATION

05123 - BUILDING WIRE AND CABLE
05131 - CONDUIT
05138 - BOXES
05139 - CABINETS AND ENCLOSURES
05140 - WIRING DEVICES
05155 - EQUIPMENT WIRING
05210 - ELECTRICAL UTILITY SERVICES
05412 - ENCLOSED SWITCHES
05423 - ENCLOSED MOTOR CONTROLLERS
05425 - VARIABLE FREQUENCY CONTROLLERS
05443 - PANELBOARDS
05510 - INTERIOR LUMINAIRES
05520 - EXTERIOR LUMINAIRES
05530 - STREET LIGHTING
05540 - OUTDOOR LIGHTING

STANDARD SANITARY SE□ ER DETAILS

SS-1 STANDARD SEWER TRENCH
SS-2 SANITARY SEWER MANHOLE
SS-3 SEWER SERVICE CONNECTION

STANDARD STORM DRAIN DETAILS

SD-1 STORM DRAIN TRENCH
SD-2 GUTTER INLET BOX
SD-3 CLEANOUT BOX
SD-4 COMBINATION GUTTER INLET & CLEANOUT BOX
SD-5 INLET/OUTLET TRASH GRATES

STANDARD CULINARY □ ATERLINE DETAILS

CW-1 WATERLINE TRENCH
CW-2 CONCRETE THRUST BLOCKS
CW-3 WATERLINE LOOP
CW-4 FIRE HYDRANT CONNECTION
CW-5 RESIDENTIAL METER CONNECTION- 3/4 X 5/8 INCH OR 1"
CW-6 METER VAULT 2-INCH
CW-7 METER VAULT 4-INCH
CW-8 METER VAULT 6-INCH
CW-9 METER VAULT 8-INCH
CW-10A PRESSURE REDUCING VALVE (PRV) STATION - 1 OF 2
CW-10B PRESSURE REDUCING VALVE (PRV) STATION - 2 OF 2
CW-11 DETECTOR CHECK VALVE
CW-12 AIR/VACUUM RELIEF VALVE
CW-13 2" BLOW OFF VALVE
CW-14 SAMPLING STATION
CW-15 CONCRETE COLLAR

STANDARD PRESSURI□ED IRRIGATION DETAILS

PI-1 TRENCH DETAIL
PI-2 CONCRETE THRUST BLOCKS
PI-3 1" SINGLE AND DUAL LATERALS
PI-4 SECONDARY WATER CONNECTION FOR PARKS & OPEN SPACE
PI-5A 1" IRRIGATION SERVICE BOX
PI-5B DUAL IRRIGATION SERVICE BOX
PI-5C PARTS LIST FOR 1" IRRIGATION SERVICE
PI-6 2" IRRIGATION SERVICE
PI-7 4" METER VAULT

PI-8 AIR/VACUUM RELIEF VALVE
PI-9 2" & 4" DRAIN VALVES
PI-10 RPZ BACKFLOW PREVENTOR FOR LATERALS
PI-11 RPZ BACKFLOW PREVENTOR FOR MAINS
PI-12 2" BLOW OFF VALVE
PI-13 CONCRETE COLLAR

STANDARD STREET IMPRO□EMENT DETAILS

ST-1 SIDEWALK AND CURB & GUTTER STANDARDS
ST-2 CURB & GUTTER DETAILS
ST-3 WATERWAY DETAIL
ST-4 FLARE DRIVE APPROACH
ST-5A HANDICAP ACCESSIBLE RAMP
ST-5B HANDICAP ACCESSIBLE RAMP
ST-5C HANDICAP ACCESSIBLE RAMP
ST-5D HANDICAP ACCESSIBLE RAMP
ST-5E HANDICAP ACCESSIBLE RAMP
ST-6 DEFECTIVE CONCRETE REPLACEMENT CRITERIA
ST-7 STANDARD INTERSECTION & UTILITY DETAIL
ST-8 RESIDENTIAL ROADWAY- 56' RIGHT-OF-WAY
ST-9 COLLECTOR- 77' RIGHT-OF-WAY
ST-10 MINOR ARTERIAL- 95' RIGHT-OF-WAY
ST-11 MAJOR ARTERIAL - 180' RIGHT-OF-WAY
ST-12 PRINCIPAL ARTERIAL - 180' RIGHT-OF-WAY
ST-13 INTERIM ARTERIAL - 180' RIGHT-OF-WAY
ST-14 STANDARD TEMPORARY TURN-AROUND
ST-15A 8' WIDE TRAIL STANDARDS
ST-15B 8' WIDE TRAIL STANDARDS FOR INTERIM ROADS
ST-16 STANDARD CUL-DE-SAC
ST-17 ROUNDABOUT: RESIDENTIAL ROADWAY- 56' RIGHT-OF-WAY
ST-18 ROUNDABOUT: MINOR COLLECTOR- 77' RIGHT-OF-WAY
ST-19 ROUNDABOUT: MAJOR COLLECTOR- 95' RIGHT-OF-WAY
ST-20 ROUNDABOUT: MAJOR ARTERIAL ROADWAY- 180' RIGHT-OF-WAY
ST-21 ROUNDABOUT: TYPICAL CROSS SECTIONS
ST-22 SPEED TABLE DETAIL
ST-23 56' ROW NECKED INTERSECTION DETAIL
ST-24 77' ROW NECKED INTERSECTION DETAIL
ST-25 95' ROW NECKED INTERSECTION DETAIL
ST-26 STANDARD TEE PATCH
ST-27 UTILITY MARKERS DETAIL
ST-28 STREET AND REGULATORY SIGN DETAIL
ST-29 SURVEY MONUMENT DETAIL
ST-30 PRIVATE ROADWAY: W/O PARKSTRIPS – 40’ RIGHT-OF-WAY
ST-31 PRIVATE ROADWAY: W/ PARKSTRIPS – 48’ RIGHT-OF-WAY
ST-32 PRIVATE ROADWAY: RURAL-56’ RIGHT-OF-WAY
ST-33 STANDARD INTERSECTION & UTILITY DETAILS
ST-34 URBAN, RURAL, AND WILDERNESS TRAILS

STANDARD LANDSCAPING DETAILS

LS-1 SPRINKLER SYSTEM MAINLINE ISOLATION VALVE 4" & LARGER
LS-2 SPRINKLER SYSTEM QUICK COUPLER VALVE
LS-3 SPRINKLER SYSTEM REMOTE CONTROL VALVE
LS-4 SPRINKLER SYSTEM STAINLESS STEEL CONTROLLER IN STRONG BOX
LS-5 SATELLITE SPRINKLER SYSTEM STAINLESS STEEL CONTROLLER
LS-6 SPRINKLER SYSTEM LARGE ROTARY HEAD POP-UP SPRINKLER DETAIL
LS-7 SPRINKLER SYSTEM MEDIUM & SMALL POP-UP SPRAY SPRINKLER DETAIL
LS-8 SPRINKLER SYSTEM MANUAL DRAIN DETAIL

LS-9 SPRINKLER SYSTEM SLEEVING DETAIL
LS-10 SPRINKLER SYSTEM PIPE/TRENCH DETAIL
LS-11 PIPE AND WIRE TRENCH DETAIL
LS-12 AUTOMATIC DRAIN DETAIL
LS-13 TREE STAKING/ PLANTING DETAIL
LS-14 VINYL FENCE WITH MOW STRIP

STANDARD STREET LIGHT DETAILS

LP-1 14' RESIDENTIAL STREET LIGHT
LP-1B CONCRETE BASE DETAIL FOR 14' RESIDENTIAL STREET LIGHT
LP-1C RESIDENTIAL STREET LIGHT LUMINARE
LP-2 20' STREET LIGHT COLLECTOR/COMMERCIAL
LP-2A 20' STREET LIGHT COLLECTOR/COMMERCIAL WITH BANNER ARM
LP-2B CONCRETE BASE DETAIL FOR COLLECTOR/COMMERCIAL STREET LIGHT
LP-2C LUMINARE- COLLECTOR/COMMERCIAL
LP-3 28' ARTERIAL STREET LIGHT
LP-3A 28' ARTERIAL STREET LIGHT WITH BANNER ARM
LP-3B CONCRETE BASE DETAIL FOR 28' ARTERIAL STREET LIGHT
LP-3C ARTERIAL STREET LIGHT LUMINARE
LP-4 RESIDENTIAL STREET LIGHT CONNECTION DETAIL
LP-5 COMMERCIAL STREET LIGHT CONNECTION DETAIL
LP-6 LIGHT POLE BELOW GRADE BOXES INSTALLATION DETAILS

SP PLAT NAME AND PHASE

DIVISION 00

DESIGN STANDARDS

SECTION □□□□□

DESIGN STANDARDS

PART □ GENERAL

□□□□ SECTION INCLUDES

A. Codes and Standards

B. Design Standards

C. Construction Drawing Requirements

□□□□ RELATED SECTIONS

A. Section 00620 - Documentation

□□□□ SUBMITTALS

A. Construction Drawings

1. One copy of Construction Drawings shall be submitted to the City Engineer for preliminary review.

2. Two copies of Construction Drawings shall be submitted to the City Engineer for final approval with exhibit illustrating incumbent property.

3. Five full size copies of Construction Drawings shall be submitted to the City Engineer before start of construction. These drawings shall be stamped by the City Engineer and distributed as required.

B. Easements and Land Acquisition

1. All Easements and Land Acquisitions shall be submitted on the City's Standard Easement form and shall be included on the recorded subdivision plat.

2. All Easements shall be accompanied by an exhibit illustrating encumbered property.

3. One copy of all necessary Easement forms shall be submitted to the City Engineer for review.

4. One signed copy of all necessary Easement forms, including exhibits, shall be submitted to the City Engineer for final approval and recordation.

5. All necessary permits shall be submitted to the City Engineer for final approval. Required permits include, but are not limited to: state and county utility line permits, canal crossing permits, Railroad Crossing permits, UPDES permits, Army Corp. of Engineer permits, encroachment and excavation permits, etc.

6. All necessary permits and easements must be submitted prior to final approval being granted by the City.

□□□□ CITY ENGINEER□S AUTHORITY

A. The City Engineer shall review submitted Construction Drawings for compliance to these Design Standards and Construction Specifications.

B. The City Engineer shall note any changes to Construction Drawings, required to bring Construction Drawings into compliance with these Design Standards and Construction Specifications.

C. Required changes shall be made to Construction Drawings and returned to the City Engineer for final approval.

D. The City Engineer shall have additional authority such as is stated in these Design Standards and Construction Specifications.

PART E ECUTION

CODES AND STANDARDS

A. Design shall be based on the following:

1. Sanitary Sewer Systems.
   a. ASCE Manual and Reports on Engineering Practice No. 60, Gravity Sanitary Sewer Design & Construction.
   b. Utah State Department of Health Code of Waste Disposal Regulations.
   c. Utah Division of Water Quality Administrative Rules for Design Requirements for Wastewater Collection, Treatment and Disposal Systems.
   d. Uniform Plumbing Code, Latest Edition.
   e. National Electrical Code

2. Culinary and Secondary Water Systems.
   a. State of Utah Administrative Rules for Public Drinking Water Systems.
   b. Uniform Plumbing Code, Latest Edition.
   c. National Electrical Code

3. Storm Drainage Systems.
   a. Guidelines, procedures and design criteria as defined by the City's Standards & Specification, and Storm Water management Plan.

4. Transportation System
   a. Guidelines, procedures and design criteria as defined by AASHTO, MUTCD, and ADA.

B. All Work not specifically described in these design standards and technical specifications shall conform to the APWA "Manual of STANDARD SPECIFICATIONS" as published by the Utah Chapter of the American Public Works Association. The latest edition at the time of the Work shall be used.

DESIGN STANDARDS

A. Infrastructure designs shall conform to the most recent City of Saratoga Springs current Capital Facilities and Master Plans; and to these design standards and technical specifications.

1. These Design Standards are design guidelines. The City's design standards do not relieve the developer's engineer from being responsible for examining and understanding local project conditions, confirming the correlation of all design standards with the techniques of construction, coordination of the standards with that of all other industry standards, and for the complete and satisfactory design of the project.

B. SANITARY SEWER SYSTEMS:

1. The impact of any proposed sewer system, on the existing sewer system, will be reviewed by the City Engineer. The developer may be required to add additional off-site sewer systems in order to provide adequate sewer service to his development.
   a. Areas that will be serviced through the proposed development will be considered and the method of service to those areas will be determined and approved by the City Engineer. Increased system size may be required for future development, as approved by the City Engineer.

2. The minimum size of sewer main line shall be 8-inch diameter.

3. Sewer lines shall be designed to maintain a velocity of two feet per second (2 fps) during peak flows, unless otherwise accepted and approved by the City Engineer.

4. Unless otherwise accepted and approved by the City Engineer, the minimum sewer slopes shall be as follows:
   a. 8-inch sewer lines – 0.0040 foot/foot
   b. 10-inch sewer lines – 0.0028 foot/foot
   c. 12-inch sewer lines – 0.0022 foot/foot
   d. 15-inch sewer lines – 0.0015 foot/foot
   e. 18-inch sewer lines – 0.0012 foot/foot
   f. 21-inch sewer lines – 0.0010 foot/foot
   g. 24-inch sewer lines – 0.0008 foot/foot
   h. Larger than 24-inch per City Engineer's recommendation

5. The minimum sewer depth shall be 13.0 feet under normal conditions.
   a. In areas of shallower sewer, the following note shall be added to the development plat: "Shallow Sewer Depths! Contractor shall verify sewer depths before excavating for basement. Home(s) with basement may not have sewer service available for basement."
   b. The City Engineer may increase the minimum sewer depth if required to meet overall system requirements.

6. A minimum of four feet of cover shall be required over all sewer lines, where acceptable to the City Engineer.

7. Sewer shall be located on the low side of streets, preferably 5 feet from street centerlines.

8. A minimum of five feet shall be maintained between the edge of manhole collars to edge of the street pavement.

9. Sewer shall be located at 10-foot minimum horizontal distance from culinary waterlines.

10. Where possible, sewer shall be located at 10-foot minimum horizontal distance from all other public utilities, including but not limited to storm drains, and secondary water lines.

11. Sewer main lines shall be extended to property lines as per City Engineer's directions to service future Development and end of manhole.

12. In the locations where the sewer leaves the public right-of-way a twenty-foot wide sanitary sewer easement will be required. This easement shall be centered on the sewer line, unless otherwise approved by the City Engineer. Sewer easements shall extend ten feet beyond dead end manholes. Show easements on the development plat and on the City's Standard Easement forms, which grant the easements to the City. Easements must be executed and returned to the City Office prior to final approval being granted.

13. No plugged ends of sewer main lines will be allowed. Manholes must be constructed at the ends of sewer lines.

14. The minimum size manhole shall be 4-foot diameter.

15. 5-foot diameter manholes shall be used in the following situations:
   a. At all intersections of three or more 8-inch or larger pipe lines.
   b. Where the deflection angle of the pipe line exceeds 90 degrees.
   c. When both items "a" and "b" are designed in the same manhole, a six-foot manhole is required.

16. A 12 foot paved access road shall be constructed to all manholes and shall be capable of supporting H-20 loading.

17. Where new sewer lines are connected to existing sewer lines, a 5-foot diameter manhole shall be constructed over the existing sewer line.

18. The maximum manhole span shall be 400 feet, as measured from center to center of manholes.

19. A 0.2-foot elevation step shall be provided in all junction manholes no more and no less; except where accepted otherwise by the City Engineer.
    a. The maximum allowable drop, between inlet and outlet inverts, through a manhole is two feet.
    b. When the drop in a manhole is between one and two feet, a five-foot manhole is required.
    c. Where incoming slopes at manholes are greater than or equal to 5 percent, the incoming slope shall be carried through the manhole, unless otherwise accepted and approved by the City Engineer.

20. Where pipes of different diameters melding laterals connect into a manhole, the inside top of the smaller pipe shall match the inside top of the larger pipe, unless approved otherwise by the City Engineer.

21. Where incoming slopes at manholes are greater than or equal to 5 percent and the deflection angle within the manhole is greater than or equal to 45 degrees but less than 90 degrees, a five-foot manhole with an extra deep trough is required.
    a. Where incoming slopes at manholes are greater than or equal to 5 percent and the deflection angle within the manhole is greater than 90 degrees, a six-foot manhole with an extra deep trough is required.

22. The minimum lateral size shall be 4-inch for residential connections; and 6-inch for commercial and industrial connections.
    a. Sewer lateral shall have a minimum slope of 2%.

23. Sewer laterals shall tie directly into manholes in cul-de-sacs and at dead end manholes.

24. Sewer laterals may tie directly into manholes wherever possible and practical.

25. Sewer laterals shall conform to the requirements of the Utah State Department of Health Code and the Uniform Plumbing Code; with cleanouts at not more than 100-foot spacing; and no more than two bends in excess of 45 degrees without a cleanout.

26. Each building and/or unit of separate ownership shall require a separate sanitary sewer lateral, unless otherwise approved by the City Engineer.

27. Grease traps shall be required on all commercial development as determined by City Engineer.
    a. Sampling manholes shall be installed downstream of all grease traps as approved by the City Engineer.
    b. Sampling manhole & grease trap shall be constructed as per TSSD Standards & Specifications.

28. Force main discharge manholes shall be epoxy lined or equal as approved by City Engineer.

C□ CULINARY □ ATER SYSTEMS:

1. The State of Utah Administrative Rules for Public Drinking Water Systems, R309-510, provide minimum sizing requirements for drinking water facilities.

2. Water systems shall be sized as described in the City's Capital Facilities & Master Plans and shall be a minimum of 8" in public right-of-way.

3. The minimum fire flow shall be 2000 gpm. The fire flow may be increased as determined by the City Fire Marshal.

4. The minimum residual pressure in all parts of the system during peak day demand is to be 40 psi.

5. The maximum operating pressure is to be 100 psi; unless otherwise approved by the City Engineer.

6 Water systems shall be designed so that pressures conform to the pressure zones shown in the City's Capital Facilities Plan; and as approved by the City Engineer.

7. The construction drawings shall show pipe sizes, types, and classifications.
   a. All water system appurtences shall be labeled

8. The maximum pipe line flow velocities shall be 6 feet per second; unless approved otherwise by the City Engineer.

9. The impact of any proposed water system on the existing water system will be reviewed by the City Engineer. The developer may be required to add additional off-site infrastructure in order to provide adequate water supply to his development.
   a. Areas that will be supplied through the proposed development will be considered and the method of service to those areas will be determined and approved by the City Engineer. Increased system size may be required for future development, as approved by the City Engineer.
   b. The system storage requirements will be considered for each development and approved by the City Engineer.

10. The minimum cover over top of water lines is to be 48-inches.

11. Water lines 12 inches and larger shall be ductile iron Class-53. Water lines 10 inches and smaller shall be PVC AWWA C900 Class 200.

12. Valves 12 inches or larger shall be butterfly valves; Valves smaller than 12 inches shall be gate valves.

13. Water lines shall be placed in the park strips as required by the City Standards.
   a. Location shall be on the east side of north/south streets.
   b. Location shall be on the north side of east/west streets.

14. Valve placement:
   a. Valves shall be placed at the point of curvature of the curb and gutter radius sections.
   b. Valves shall be placed at intervals not to exceed 800 feet, unless approved otherwise by the City Engineer.
   c. At intersections, valves shall be placed on at least three branches of the system, as approved by the City Engineer.
   d. Valves shall be placed within 10 feet of the upstream and downstream ends of casing pipes.
   e. Valve nut elevation shall not exceed 4 feet below finished grade without extension.

15. Blow-offs shall be placed at the ends of water lines, at low points in the system, and at other locations as shown on the City's Standard drawings and as approved by the City Engineer.

16. Fire Hydrants:
   a. Fire hydrants shall have a maximum spacing of 500 feet in residential areas; and a maximum spacing of 300 feet in commercial and industrial areas.
   b. Fire hydrants shall be placed at the end of cul-de-sac pipe lines, the end of dead end streets, and every 1,000 feet on offsite transmission lines. Temporary hydrants may not be considered as fire protection hydrants; but shall be used for flushing and maintaining lines.
   c. Fire hydrant spacing shall be approved by the City Engineer; additional fire hydrants may be required by either the City Fire Chief or City Engineer.

17. Air-Vacuum Valve Stations:
   a. Air-vacuum valve station venting shall be located in a landscaped area near the edge of the right-of-way (ROW) as approved by City Engineer.
   b. Air-vacuum valve stations shall be placed at high points on transmission lines and at other locations as required for proper system operation, and as approved by the City Engineer.
   c. Air-vacuum valve stations shall be constructed as indicated on the drawings.

18. Water Service Connections shall include the corporation stop at the main line, CTS Poly service line to the meter yoke, an angle stop, back-flow angle valve, PVC meter box, and cast iron frame and cover, as shown on the City Standard drawings.

19. In the locations where the water lines leave the public right-of way a ten-foot wide easement will be

required. This easement shall be centered on the water line, unless otherwise approved by the City Engineer. Water easements shall extend ten feet beyond dead ends and hydrants. Show easements on the development plat and on the City's Standard Easement forms, which grant the easements to the City. Easements must be executed and returned to the City Office prior to final approval being granted.

20. Each building and/or unit of separate ownership shall require a separate water service line, unless otherwise approved by the City Engineer.

21. PRESSURE REGULATING STATIONS shall be constructed, where required to provide water supply between pressure zones, as indicated on the City Standard drawings and as approved by the City Engineer.
    a. The station plumbing shall consist of a main line and a by-pass line. The combined capacity of the main line and by-pass plumbing shall equal the capacity of the incoming pipe line. The main line will normally be one pipe size smaller than the incoming line and the by-pass line will be sized as required.
    b. Plumbing will include pressure regulating valves on each line, isolation valves on each side of each regulating valve, and all appurtenant plumbing items, as indicated on the standard drawings and as approved.

D SECONDARY ATER SYSTEMS:

1. The State of Utah Administrative Rules for Public Drinking Water Systems, Part II, R309-200 through R309-211, provide minimum sizing requirements for secondary water facilities.

2. Secondary Water systems shall sized as described in the City's Capital Facilities Plan and shall be a minimum of 6" in public right-of-way.

3. The normal minimum pressure in all parts of the system during peak day demand shall be 30 psi.

4. The maximum operating pressure is to be 90 psi; unless otherwise approved by the City Engineer.

5. The maximum pipe line flow velocities will be 6 feet per second; unless approved otherwise by the City Engineer.

6. The impact of any proposed water system on the existing water system will be reviewed by the City Engineer. The developer may be required to add additional off-site infrastructure in order to provide adequate water supply to his development.

7. Areas that will be supplied through the proposed development will be considered and the method of service to those areas will be determined and approved by the City Engineer. Increased system size may be required for future development, as approved by the City Engineer.

8. The system storage requirements will be considered for each development and approved by the City Engineer.

9. The minimum cover over top of water lines is to be 36-inches.

10. Secondary water lines shall be placed in the park strips as required by the City Standards.
    a. Location shall be on the west side of north/south streets.
    b. Location shall be on the south side of east/west streets.
    c. Location shall be on the opposite side of the street from culinary water lines.

11. Water lines 12 inches and larger shall be ductile iron Class-53. Water lines 10 inches and smaller shall be PVC AWWA C900 Class 200.

12. Valve placement:
    a. Valves shall be placed at the projection of the end of curb and gutter radius sections at the point of curvature.
    b. Valves shall be placed at intervals not to exceed 800 feet, unless approved otherwise by the City

Engineer.

c. At intersections, valves shall be placed on at least three branches of the system, as approved by the Engineer.
d. Valves shall be placed within 10 feet of the upstream and downstream ends of casing pipes.

13. Blow-offs shall be placed at the ends of water lines at the low points in the system, and at other locations as shown on the City's Standard drawings and as approved by the City Engineer.

14. Water Service Connections shall be constructed as shown on the City Standard drawings.

15. In the locations where the water lines leave the public right-of way a ten-foot wide easement will be required. This easement shall be centered on the water line, unless otherwise approved by the City Engineer. Water easements shall extend ten feet beyond dead ends. Show easements on the development plat and on the City's Standard Easement forms, which grant the easements to the City. Easements must be executed and returned to the City Office prior to final approval being granted.

16. Each building and/or unit of separate ownership shall require a separate water service line, unless otherwise approved by the City Engineer.

17. PRESSURE REGULATING STATIONS shall be constructed, where required to provide water supply between pressure zones, as indicated on the City Standard drawings and as approved by the City Engineer.
    a. The station plumbing shall consist of a main line and a by-pass line. The combined capacity of the main line and by-pass plumbing shall equal the capacity of the incoming pipe line. The main line will normally be one pipe size smaller than the incoming line and the by-pass line will be sized as required.
    b. Plumbing will include pressure regulating valves on each line, isolation valves on each side of each regulating valve, and all appurtenant plumbing items, as indicated on the standard drawings and as approved.

18. Air-Vacuum Valve Stations:
    a. Air-vacuum valve station venting shall be located in a landscaped area near the edge of the right-of-way (ROW) as approved by City Engineer.
    b. Air-vacuum valve stations shall be placed at high points on transmission lines and at other locations as required for proper system operation, and as approved by the City Engineer.
    c. Air-vacuum valve stations shall be constructed as indicated on the drawings.

19. Drains shall be installed at all low points on pressure irrigation lines, and at other located as directed by the City Engineer.

E STORM DRAIN SYSTEMS:

1. The impact of any proposed storm drain system on the existing drainage system will be reviewed by the City Engineer. The developer may be required to add additional off-site storm drain systems in order to provide adequate drainage control for his development.

2. Areas that will be drained through the proposed development will be considered and the method of drainage for those areas will be determined and approved by the City Engineer. Increased system size may be required for future development, as approved by the City Engineer.

3. Drainage structures, consisting of drainage channels, bridges, culverts, storm drain pipe lines, and appurtenant structures, shall be designed to convey the anticipated storm water discharge.
    a. Bridges shall be designed to convey a 100-yr storm event.
    b. Culverts shall be designed to convey a 100-yrstorm event.
    c. Storm drain lines shall be designed to convey 25 year storm event.
    d. Drainage channels shall have a minimum of 2' of free board above the 100-year high water elevation.
    e. Drainage Channels shall be designed to convey the 100-year storm event.
    f. Storm drain use shall be designed for a maximum depth to diameter ratio of 80%.
    g. Drainage channels shall be designed for a maximum velocity of 7 fps.

4. Drainage structures shall be constructed as indicated on the City Standard drawings.

5. Cleanout boxes shall be located at every change in alignment or slope and at junctions with other lines, as approved by the City Engineer.

6. Inlet boxes shall be placed as follows:
   a. Spaced at no more than 500 feet apart to collect sheet flow of storm water.
   b. Located at the uphill end of radius sections.

7. Maximum spans between structures shall be 400 feet from center to center of structures.

8. All storm drains in public right-of-way shall be constructed with reinforced concrete pipe; with minimum size of 15-inch diameter unless otherwise approved by City Engineer.

9. Storm drain lines shall be designed to maintain a velocity of two feet per second (2 fps) during peak flows unless otherwise accepted and approved by the City Engineer.

10. Unless otherwise accepted and approved by the City Engineer, the minimum pipe slopes shall be as indicated in the section for sanitary sewer lines.

11. Minimum cover shall be as per manufacturers recommendation over all reinforced concrete drain lines.

12. Storm drains shall be located as indicated on the City's Standard drawings and shall be located in ROW or dedicated open spaces..

13. Where pipes of different diameters connect into a drainage structure, the inside top of the smaller pipe shall match the inside top of the larger pipe, unless approved otherwise by the City Engineer.

14. A 0.2-foot minimum elevation step shall be provided in all junction manholes; except where accepted otherwise by the City Engineer.
    a. The maximum allowable drop, between inlet and outlet inverts, through a manhole is two feet.
    b. When the drop in a manhole is between one and two feet, a five-foot manhole is required.
    c. Where incoming slopes at manholes are greater than or equal to 5 percent, the incoming slope shall be carried through the manhole, unless otherwise accepted and approved by the City Engineer.

15. A 12 foot paved access road shall be constructed to all manholes and shall be capable of supporting H-20 loading.

16. Sump manholes designed to infiltrate water are not permitted.

17. Storm drain lines shall be extended to property lines as per City Engineer's direction to accommodate future development and shall end at a manhole.
    a. No plugged ends of storm drain will be allowed. Manholes must be constructed at ends of storm drain line.

18. In the locations where the storm drain leaves the public right-of way a twenty-foot wide drainage easement will be required. This easement shall be centered on the drain line, unless otherwise approved by the City Engineer. Drainage easements shall extend ten feet beyond dead end structures. Show easements on the development plat and on the City's Standard Easement forms, which grant the easements to the City. Easements must be executed and returned to the City Office prior to final approval being granted.

19. Storm Water Treatment Systems shall be constructed where and as directed by the City Engineer.
    a. Treatment systems shall be designed to treat all of the flow from the areas where storm water needs to be treated, with no bypass into the City storm water system of the treatment design storm parameters.
    b. Systems shall be designed to remove all of the oils and floatables from the storm water and 80% of the total suspended solids (TSS) 110 microns or larger.
    c. Systems shall be sized to treat the first flush and to pass the 100 year peak flow with no washout.

20. Detention Systems.
    a. The capacity of all detention systems shall be sufficient to contain the anticipated runoff volume from a 100-year 24-hour storm event over those portions of the gross aggregate area under design; with a maximum release of 0.2 cfs/acre or the historic flow rate, whichever is less.
    b. Systems shall be constructed as described and as shown in the City's Standards.
    c. Low flows, where applicable, shall be piped through the detention system.
    d. Detention system capacity may not be reduced for infiltration or evaporation rates.
    e. Retention systems are not permitted. All systems must have both an outfall and overflow system.
    f. Ponds are to be landscaped per City's Standards.
    g. Provide access roads to all inlet/outlet structures.
    h. All ponds shall have a minimum of 1' of free board above the 100 year high water elevation.
    i. Maximum interior and exterior slopes shall be 3:1.
    j. Detention areas may not be located within residential lots.
    k. Detention areas shall be a minimum of 10' from property lines.
    l. Underground systems shall have impermeable liners and shall not be permitted to infiltrate.

21. Install fabricated galvanized steel trash grates over the ends of all exposed pipes, 15-inch and larger.

□□ **STREET SYSTEMS**:

1. Streets systems, consisting of curb and gutter, sidewalks, handicap ramps, street pavement, and appurtenant items shall be designed as described below, as shown in Tables 1, 2, and 3 , and as shown in the City Standards.
    a. Table 1 shows the ROADWAY DESIGN STANDARDS; including right-of-way widths, pavement widths, street grades, and appurtenant design criteria.
    b. Table 2 shows the subgrade protection layer required to be placed to protect subgrade soils. Prior to placement of any typical pavement section, a subgrade protection layer must be placed. Directions for this are outlined on Table 2.
    c. Table 3 shows the typical pavement sections required for the different categories of traffic. Different options are provided for some of the sections.
    d. Table 4 shows the Geosynthetic Requirements for Type 1 and 2 geogrids if those options are utilized.

2. Street system designs shall be shown on the construction drawings and shall be acceptable to the City Engineer.

3. Streets shall be constructed with asphaltic concrete, course untreated base, course and granular borrow material for sub-base and/or subgrade protection, and a geotextile as required.
    a. Thickness of each course shall be determined based on the subgrade and pavement classification. Table 1 outlines the standard design standards. Table 2 outlines the required subgrade protection based on the design CBR of the subgrade. Table 3 outlines the required pavement section based on classification of the roadway. All sections must be approved by the City Engineer.
    b. Thickness may be modified by design of a geotechnical engineer, but must be approved by the City Engineer.

4. No new street pavement will be cut into for three years after acceptance of pavement, unless otherwise approved by the City Engineer.

5. Speed tables shall be constructed as indicated on the drawings; where and as directed by the City Engineer.

6. Street light locations shall be at intersections and every 300 feet, placed on alternating sides of streets.

7. Round-about intersections may be constructed where and as accepted by the City Engineer.
    a. Round-about designs shall be as indicated on the standard drawings.

8. Type 2 slurry seal shall be placed on all streets prior to the end of the warranty period.

TABLE □

ROAD□ AY DESIGN STANDARDS				
	RESIDENTIAL □C□□□□ I□	**COLLECTOR** □C□□□□ II□	**MINOR ARTERIAL** □C□□□□ III□	**MA□OR □ PRINCIPLE ARTERIAL** □C□□□□ I□□
ROW Width	56'	77'	95'	180'
Pavement Width	24'	44'	44'	68' – 92'
Number of Lanes	2	2	2	5 – 7
Design Speed	25	30	40	55
20 Year ESAL Requirement	60,000	250,000	700,000	2,000,000
Vehicle Design	Passenger, School Buses, Delivery trucks, dump Trucks	Passenger, School Buses, Delivery trucks, Dump/Concrete Trucks	Passenger, School Buses, Delivery Trucks, Dump/Concrete Trucks	Passenger, School Buses, Delivery Trucks, Dump/Concrete Trucks, Semi Loads
Stopping Sight Distance	200	300	300	425
Horizontal Alignment & Radius	200	300	565	1190
Vertical Curve Min "K" Sag/Crest Requirements	37/20	49/29	64/44	115/114
Grades	0.5 - 10	0.5 - 8	0.5 - 8	0.5 - 8
Intersection Sight Distance	335	445	445	555
Minimum Signalized Intersection Spacing	N/A	1,320'	2640'	2,640'
Minimum Full Movement access Spacing	125'	500'	500'	660'
Corner Curb Radius	25	25	35	40
Access Spacing	See Transportation Master Plan			

TABLE □

□S□□□r□d□ □r□□□□□□□ □□□□r □ □□□□□ □□□□□d □□□r □□□ □□□□r□d□ □□□□□ □r□□r □□ □□□□□□□ □□□□□□□□□ □□□□□□ □□□ □□□□□□□□□ A d□□□□□ CBR □ □□□□□□ d□□□r□ □□□d □□ □ □□□□□□□□□□□□□□□□□□□□r□ B□□□d □□ □□□□ CBR □□□□□□□□□□ □□□r□ □□□□□ □r□□d□□ □□□ □ □□□ Gr□□□□□r B□rr□□ □ □□□□□□ □□□□□d □□ □d□□□□□□□□□ □□□□□□r□□□□ □□□□□□□□□□□□□□ r□□□r□□□□□d □□ T□□□□□ □□ l□□□□ □□□□□□□□ CBR□ □□□□□□ □□□□□r□d□ □r□ □□□□□d □□ □□ □□□□□r □□□□□ □□□ d□□□□□□ □□□□□□□□□□□□□□□□□□□□□d □□ □□□d□□

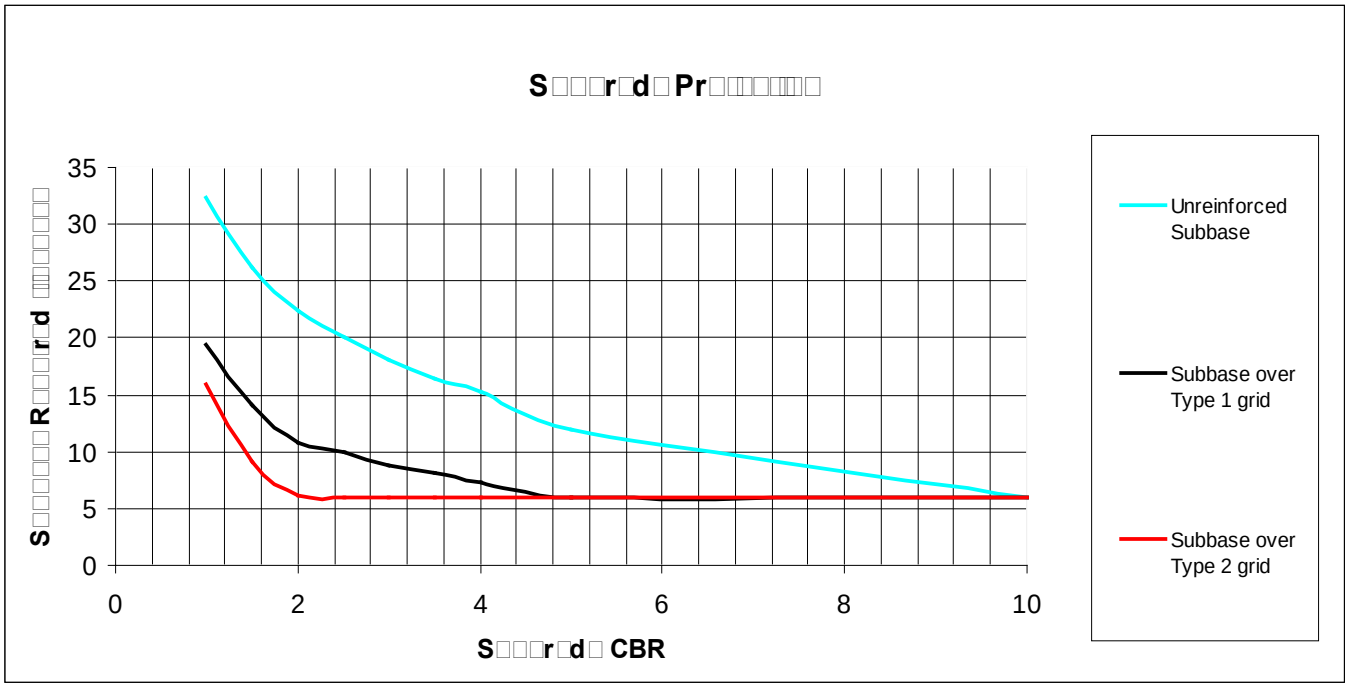

TABLE

Minimum Pavement Sections Based on Classification

(The following section(s) must be placed on top of the subgrade protection layer outlined in Table 2)

Residential Typical Section (Class I)		
3” AC (Asphalt Concrete) 8” UTBC (Untreated Base Course)		
Collector Typical Section Options (Class II)		
4” AC 8” UTBC	3” AC 8” UTBC Type 1 Geogrid	
Minor Arterial Typical Section Options (Class III)		
5” AC 8” UTBC	4” AC 8” UTBC Type 1 Geogrid	
Major & Principle Arterial Road Typical Section Options (Class IV)		
5” AC 6”UTBC 9” GB (Granular Borrow)	5” AC 8” UTBC Type 1 Geogrid	4” AC 6” UTBC Type 1 Geogrid 9” GB

(a) Road classification and structural design must be submitted by a licensed and qualified engineer for review and approval by the City Engineer.

(b) Traffic classifications I & II require a 1/2" mix HMA design

(c) Traffic classifications III & IV require a 3/4" mix HMA design

(d) If collapsible soils are identified in the initial soils investigation or during construction, the subgrade soil shall be over-excavated and re-compacted a minimum of 18-inches or deeper as directed by a licensed and qualified geotechnical engineer.

TABLE

Structural Geogrids for Typical Pavement Sections

Alternate products to Type 1 and Type 2 Geogrids used for subgrade protection will need to provide the full-scale calibration and validation of their methodology, as outlined by Giroud-Han. Alternate products to Type 1 geogrid used within a typical pavement section will need to provide full-scale Accelerated Pavement Testing, as outlined in NCHRP Report 512, validating their design methodology. Testing submitted for Type 1 geogrids must be performed on paved sections with at least 100,000 passes of a dual wheel tandem loading.

Type 1 Geogrid

Biaxial Type 1 Geogrid Quality Control Values

Geogrid Properties	Test Method	MD	CMD
Type of Geogrid		Punched and Drawn	
Rib Shape	Observation	Rectangular or Square	
Rib Thickness	Nominal Dimensions	Minimum 0.05 in	
Nominal Aperture Size	I.D. Callipered	1.0 to 1.5 inches	
Flexural Stiffness	ASTM D-5732-95	Minimum 750,000 mg-cm	NA
Minimum True Initial Modulus in Use	ASTM 6637-01	Minimum 27,420 lb/ft	Minimum 44,550 lb/ft
Junction Efficiency	GRI-GG2-87	93%	
Resistance to Long Term Degradation	EPA 9090 Immersion Testing	100%	

Triaxial Type 1 Geogrid Quality Control Values

Geogrid Properties	Test Method	Longitudinal	Diagonal	Transverse	General
Type of Geogrid					Punched and Drawn
Rib Pitch	Nominal Dimensions	1.6	1.6		
Mid-rib depth	Nominal Dimensions		0.05	0.05	
Mid-rib width	I.D. Callipered		0.04	0.04	
Rib Shape	ASTM D-5732-95				rectangular
Aperture Shape	ASTM 6637-01				triangular
Radial Stiffness	ASTM 6637-01				15,430 lb/ft @ 5% strain
Junction Efficiency	GRI-GG2-87				93%
Resistance to Long Term Degradation	EPA 9090 Immersion Testing				100%

Type 2 Geogrid

Biaxial Type 2 Geogrid Quality Control Values

Geogrid Properties	Test Method	MD	CMD
Type of Geogrid		Punched and Drawn	
Rib Shape	Observation	Rectangular or Square	
Rib Thickness	Nominal Dimensions	Minimum 0.07 in	
Nominal Aperture Size	I.D. Callipered	1.0 to 1.5 inches	
Flexural Stiffness	ASTM D-5732-95	Minimum 2,000,000 mg-cm	NA
Minimum True Initial Modulus in Use	ASTM 6637-01	Minimum 34,000 lb/ft	Minimum 42,000 lb/ft
Junction Efficiency	GRI-GG2-87	93%	
Resistance to Long Term Degradation	EPA 9090 Immersion Testing	100%	

Triaxial type 2 Geogrid Quality Control Values

Geogrid Properties	Test Method	Longitudinal	Diagonal	Transverse	General
Type of Geogrid					Punched and Drawn
Rib Pitch	Nominal Dimensions	1.6	1.6		
Mid-rib depth	Nominal Dimensions		0.07	0.06	
Mid-rib width	I.D. Callipered		0.04	0.05	
Rib Shape	ASTM D-5732-95				rectangular
Aperture Shape	ASTM 6637-01				triangular
Radial Stiffness	ASTM 6637-01				29,500 lb/ft @ 5% strain
Junction Efficiency	GRI-GG2-87				93%
Resistance to Long Term Degradation	EPA 9090 Immersion Testing				100%

H□ SPECIAL SOILS DESIGN:

1. There are many areas within the City where collapsible soils exist. Where these collapsible soils exist within a proposed development, the soil's bearing capacities shall be determined by an approved geotechnical engineer. The foundations for all facilities to be constructed on these soils shall be designed by the geotechnical engineer to support the facilities as required. These facilities shall include utility lines, roadways, structures and appurtenant items.

2. The City Engineer may designate areas where known collapsible soils exists. Soils reports done for a proposed developments shall also be used to define if and where any areas of collapsible soils may exist. Where these areas exists, special care shall be taken with all construction, as described herein.

I□ RESTORATION O□ O□□SITE IMPRO□ED SUR□ACES:

1. Where offsite construction is required, all improved surfaces shall be restored to match original conditions, as acceptable to the City Engineer.

2. Paved surfaces shall be restored to the thickness and types as required to match adjacent paved surfaces; conforming to City standards.

3. Landscaped areas shall be restored to match adjacent areas, conforming to the City Standards and as acceptable to the City Engineer. Landscape materials shall conform to adjacent materials.

4. Cultivated areas shall be restored to match adjacent areas, conforming to the City Standards and as acceptable to the City Engineer. These areas shall be seeded with material conforming to adjacent materials.

5. All disturbed areas shall be restored with native grasses to match adjacent areas, conforming to the City Standards and as acceptable to the City Engineer. These areas shall be seeded with material conforming to adjacent materials, as acceptable. Restored area shall achieve 70% plan coverage prior to acceptance.

□□□□ DRA□ INGS

A. Construction Drawings shall include at a minimum, the following information:

1. Vicinity Map

2. Street names and widths

3. Subdivision lot numbers

4. Street centerline stations and property line stations; plan stations must agree with profile stations

5. Drawing scale

6. North arrow

7. County or City benchmark elevations.

8. Sewer system, to include:
   a. Size of all manholes.
   b. Rim elevation of all manholes.
   c. Invert-in and invert-out elevations at all manholes.
   d. Sewer pipe size, type, and class.
   e. Location and complete details of sewage lift stations.

9. Water systems, to include:
   a. Pipe line sizes, types and class.

b. Locations of all valves and fire hydrants.
c. Locations and types of all pipe line fittings.

10. Storm drain system, to include:
    a. Size and shape of all structures.
    b. Rim elevation of all structures.
    c. Invert-in and invert-out elevations at all structures.
    d. Drain pipe size, type, and class.
    e. Location and complete details of detention basins and appurtenant structures.
    f. Storm water treatment system.

11. Construction Details to include:
    a. Sewer
    b. Water
    c. Storm Drain
    d. Street Lights
    e. Any other relevant details

12. Erosion Control Plan with BMP locations and details to include:
    a. Street system including sidewalks, curbs, and grading.
    b. ADA profiles and intersections
    c. Existing Utilities and plans for relocations as necessary.

13. The following notes:
    a. “Contractor shall field verify locations and invert elevations of existing manholes and other utilities before staking or constructing any new sewer lines.”
    b. “Contractor shall field verify locations and invert elevations of existing storm drain structures and other utilities before staking or constructing any new storm drain lines.”
    c. “All construction shall comply to the Standard Technical Specifications and Drawings for the City Of Saratoga Springs, Utah.”
    d. “Existing Utilities have been noted to the best of Engineers knowledge, it is owners and contractors responsibility to locate utilities in field and notify Engineer and City if discrepancies exist.”
    e. “Post-approval alterations to lighting plans or intended substitutions for approved lighting equipment shall be submitted to the City for review and approval.”
    f. “The City reserves the right to conduct post-installation inspections to verify compliance with the City’s requirements and approved Lighting Plan commitments, and if deemed appropriate by the City, to require remedial action at no expense to the City.”
    g. “All exterior lighting shall meet IESNA full-cutoff criteria unless otherwise approved by the City.”

B. Any conflicts between new pipe lines and other existing utilities, including but not limited to sewer lines, culinary water lines, secondary water lines and/or storm drains shall be noted on the drawings.

C. "Match to Drawing" notes shall refer reader to adjacent drawings.

C. Connecting structures and pipe lines shall be labeled as existing or proposed.

E. Drawings shall be designed, signed and stamped by a professional engineer;

F. Construction Drawings shall include a final grading plan with spot elevations and slope labels..

G. Construction Drawings shall contain plan and profile views of all waterlines, sewer lines, and storm drain lines. Profile views shall show existing and final surface profiles.

H. All submitted preliminary Construction Drawings shall be Standard D-size drawings (24” x 36”).

I. All submitted final Construction Drawings shall be Standard D-size drawings (24" x 36").

J. Asbuilt drawings shall be printed on standard D-size mylar and be accompanied by a CD containing electronic copy and contain all information containing construction drawing with any field changes and modifications, including but not limited to:
   a. Street light alignment, location of conduit, power sources, and street lights.
   b. Location of Fire Hydrants, culinary water, secondary water, and sewer laterals stubbed into each lot with dimensions reference to permanent surface improvements.
   c. Landscaping and Irrigation improvements.
   d. As-Builts shall comply with Section 01780.
   e. As-Builts shall be stamped and signed by a professional engineer.
   f. Pond Certification form stamped and signed by a professional engineer.

END O SECTION

SECTION □□□□□

ADMINISTRATI□E RE□UIREMENTS

PART □ GENERAL

□□□□ SECTION INCLUDES

A. Preconstruction meeting.

B. Progress meetings.

C. Coordination drawings.

D. Submittals for review, information, and project closeout.

E. Number of copies of submittals.

F. Submittal procedures.

□□□□ RELATED SECTIONS

A. Section 01700 - Execution Requirements: Additional coordination requirements.

B. Section 01780 - Closeout Submittals: Project record documents.

□□□□ PRO□ECT COORDINATION

A. Project Coordinator: City Engineer.

B. Cooperate with the Project Coordinator in allocation of mobilization areas of site; for field offices and sheds, for project access, traffic, and parking facilities.

C. During construction, coordinate use of site and facilities through the Project Coordinator.

D. Comply with Project Coordinator's procedures for intra-project communications; submittals, reports and records, schedules, coordination drawings, and recommendations; and resolution of ambiguities and conflicts.

E. Comply with instructions of the Project Coordinator for use of temporary utilities and construction facilities.

F. Coordinate field engineering and layout work under instructions of the Project Coordinator.

G. Make the following types of submittals to the City Engineer:

1. Requests for interpretation.

2. Requests for substitution.

3. Shop drawings, product data, and samples.

4. Test and inspection reports.

5. Design data.

6. Manufacturer's instructions and field reports.

7. Progress schedules.

8. Coordination drawings.

9. Closeout submittals.

PART □ PRODUCTS □NOT USED

PART □ E□ECUTION

□□□□ PRECONSTRUCTION MEETING

A. City Engineer will schedule a meeting after Notice of Award.

B. Attendance Required:

1. Owners/ Representative.

2. City Representative.

3. Contractor.

4. Excavator

C. Agenda:

1. SWPPP and NOI Permit

2. Submission of executed bonds and insurance certificates, prior to meeting.

3. Traffic Control plans

4. Submission of list of Subcontractors, and progress schedule.

5. Designation of personnel representing the parties in Contract, Developer, Contractor, Owner, and the City Engineer.

6. Procedures and processing of field decisions, submittals, substitutions, applications for payments, proposal request, Change Orders, and Contract closeout procedures.

7. Review safety standards and procedures.

8. Scheduling.

9. Scheduling activities of a testing company and Geotechnical Engineer, if required.

10. Construction water availability and procedures.

D. Record minutes and distribute copies within two days after meeting to participants, with one copy to Contractor, City Engineer, Owner, participants, and those affected by decisions made.

□□□□ PROGRESS MEETINGS AND INSPECTIONS

A. Schedule and administer meetings throughout progress of the Work at maximum monthly intervals.

B. Notify the City Inspector in writing at least 2 weeks in advance to request an inspection for the acceptance or rejection of project improvements. Allow at least 2 weeks to process bond reductions for accepted items upon completion of inspection. If site is impeded by winter weather conditions, City inspector shall reschedule inspection as soon as is practicable.

B. Make arrangements for meetings, prepare agenda with copies for participants, preside at meetings.

C. Attendance Required: Job superintendent, major Subcontractors and suppliers, Owner, City Representative, as appropriate to agenda topics for each meeting.

D. Agenda:

1. Review minutes of previous meetings.

2. Review of Work progress.

3. Field observations, problems, and decisions.

4. Identification of problems which impede planned progress.

5. Review of submittals schedule and status of submittals.

6. Review of off-site fabrication and delivery schedules.

7. Maintenance of progress schedule.

8. Corrective measures to regain projected schedules.

9. Planned progress during succeeding work period.

10. Coordination of projected progress.

11. Maintenance of quality and work standards.

12. Effect of proposed changes on progress schedule and coordination.

13. Other business relating to Work.

E. Record minutes and distribute copies within two days after meeting to participants, with one copy to Contractor, City Engineer, Owner, participants, and those affected by decisions made.

□□□□ COORDINATION DRA□ INGS

A. Provide information required by Project Coordinator for preparation of coordination drawings.

B. Review drawings prior to submission to City Engineer.

□□□□ SUBMITTALS □OR RE□IE□

A. When the following are specified in individual sections, submit them for review:

1. Product data.

2. Shop drawings.

3. Samples for selection.

4. Samples for verification.

B. Submit to City Engineer for review for the limited purpose of checking for conformance with information given and the design concept expressed in the contract documents.

C. Samples will be reviewed only for aesthetic, color, or finish selection.

D. After review, provide copies and distribute in accordance with SUBMITTAL PROCEDURES article below and

for record documents purposes described in Section 01780 - CLOSEOUT SUBMITTALS.

SUBMITTALS FOR INFORMATION

A. When the following are specified in individual sections, submit them for information:

1. Design data.

2. Certificates.
3. Test reports.

4. Inspection reports.

5. Manufacturer's instructions.

6. Manufacturer's field reports.

7. Other types indicated.

B. Submit for the City Engineer 's knowledge as contract administrator or for the Owner. No action will be taken.

SUBMITTALS FOR PROJECT CLOSEOUT

A. When the following are specified in individual sections, submit them at project closeout:

1. Project record documents.

2. Operation and maintenance data.

3. Warranties.

4. Bonds.

5. Other types as indicated.

B. Submit for the Owner 's benefit during and after project completion.

NUMBER OF COPIES OF SUBMITTALS

A. Documents for Review:

1. Small size sheets, not larger than 8-1/2 x 11 inches: Submit the number of copies which the Contractor requires, plus two copies which will be retained by the City Engineer.

2. Larger sheets, not larger than 36 x 48 inches: Submit the number of opaque reproductions which Contractor requires, plus two copies which will be retained by City Engineer.

B. Documents for Information: Submit two copies.

C. Documents for Project Closeout: Make one reproduction of submittal originally reviewed. Submit one extra of submittals for information.

D. Samples: Submit the number specified in individual specification sections; one of which will be retained by City Engineer.

1. After review, produce duplicates.

2. Retained samples will not be returned to Contractor unless specifically so stated.

SUBMITTAL PROCEDURES

A. Transmit each submittal electronically or hard copy with transmittal letter.

B. Sequentially number the transmittal letters. Revise submittals with original number and a sequential alphabetic suffix.

C. Identify Project, Contractor, Subcontractor or supplier; pertinent drawing and detail number, and specification section number, as appropriate on each copy.

D. Apply Contractor 's stamp, signed or initialed certifying that review, approval, verification of Products required, field dimensions, adjacent construction Work, and coordination of information is in accordance with the requirements of the Work and Contract Documents.

E. Deliver submittals to City Engineer at business address.

F. Schedule submittals to expedite the Project, and coordinate submission of related items.

G. For each submittal for review, allow 7 days excluding delivery time to and from the Contractor.

H. Identify variations from Contract Documents and Product or system limitations which may be detrimental to successful performance of the completed Work.

I. Provide space for Contractor and City Engineer review stamps.

J. When revised for re-submission, identify all changes made since previous submission.

K. Distribute copies of reviewed submittals as appropriate. Instruct parties to promptly report any inability to comply with requirements.

L. Submittals not requested will not be recognized or processed.

END O SECTION

SECTION □□□□□

□UALITY RE□UIREMENTS

PART □ GENERAL

□□□□ SECTION INCLUDES

A. References and standards.

B. Quality assurance submittals.

C. Control of installation.

D. Tolerances.

E. Testing and inspection services.

F. Manufacturers' field services.

□□□□ RELATED SECTIONS

A. Section 01300 - Administrative Requirements: Submittal procedures.

B. Section 01600 - Product Requirements: Requirements for material and product quality.

□□□□ RE□ERENCES

A. ASTM C 1077 - Standard Practice for Laboratories Testing Concrete and Concrete Aggregates for Use in Construction and Criteria for Laboratory Evaluation.

B. ASTM D 290 - Standard Practice for Bituminous Mixing Plant Inspection.

C. ASTM D 3740 - Standard Practice for Minimum Requirements for Agencies Engaged in the Testing and/or Inspection of Soil and Rock as Used in Engineering Design and Construction.

D. ASTM E 329 - Standard Specification for Agencies Engaged in the Testing and/or Inspection of Materials Used in Construction.

E. ASTM E 543 - Standard Practice for Agencies Performing Nondestructive Testing.

F. ASTM E 548 - Standard Guide for General Criteria used for Evaluating Laboratory Competence.

G. Use the latest issue of the above reference standards as of the date of the Project.

□□□□ SUBMITTALS

A. Testing Agency Qualifications:

1. USE AMRL/CCRL Accredited Laboratory. Comparable accreditations will be accepted at discretion of the City.

2. Prior to start of Work, submit agency name, address, and telephone number, and names of full time registered Engineer and responsible officer.

3. Submit copy of report of laboratory facilities inspection made by Materials Reference Laboratory of National Bureau of Standards during most recent inspection, with memorandum of remedies of any deficiencies reported by the inspection.

4. USE WAQTC/UDOT TTQP Certified Technicians, with certifications in area of testing or inspection being performed. Comparable accreditations will be accepted at discretion of the City.

B. Test Reports: After each test/inspection, promptly submit two copies of report to City Engineer and to Contractor; within maximum of 24 hours.

1. Include:
   a. Date issued.
   b. Project title and number.
   c. Name of inspector.
   d. Date and time of sampling or inspection.
   e. Identification of product and specifications section.
   f. Location in the Project.
   g. Type of test/inspection.
   h. Date of test/inspection.
   i. Results of test/inspection.
   j. Conformance with Contract Documents.
   k. When requested by City Engineer, provide interpretation of results.

2. Test reports are submitted for the City Engineer 's knowledge as contract administrator or for the Owner, for information for the limited purpose of assessing conformance with information given and the design concept expressed in the contract documents.

C. Certificates: When specified in individual specification sections, submit certification by the manufacturer and Contractor to City Engineer, in quantities specified for Product Data.

1. Indicate material or Product conforms to or exceeds specified requirements. Submit supporting reference data, affidavits, and certifications as appropriate.

2. Certificates may be recent or previous test results on material or Product, but must be acceptable to City Engineer.

D. Manufacturer's Instructions: When specified in individual specification sections, submit printed instructions for delivery, storage, assembly, installation, start-up, adjusting, and finishing, for the Owner 's information. Indicate special procedures, perimeter conditions requiring special attention, and special environmental criteria required for application or installation.

E. Manufacturer's Field Reports: Submit reports for the City Engineer 's benefit as contract administrator or for the Owner.

1. Submit for information for the limited purpose of assessing conformance with information given and the design concept expressed in the contract documents.

F. Erection Drawings: Submit drawings for the City Engineer 's benefit as contract administrator or for the Owner.

1. Submit for information for the limited purpose of assessing conformance with information given and the design concept expressed in the contract documents.

2. Data indicating inappropriate or unacceptable Work may be subject to action by the City Engineer or Owner.

RE ERENCES AND STANDARDS

A. For products and workmanship specified by reference to a document or documents not included in the Project Manual, also referred to as reference standards, comply with requirements of the standard, except when more rigid requirements are specified or are required by applicable codes.

B. Conform to reference standard of date of issue current on date of Contract Documents, except where a specific date is established by applicable code or project specification.

C. Obtain copies of standards where required by product specification sections.

D. Maintain copy at project site during submittals, planning, and progress of the specific work, until Substantial Completion.

E. Should specified reference standards conflict with Contract Documents, request clarification from the City Engineer before proceeding.

F. Neither the contractual relationships, duties, or responsibilities of the parties in Contract nor those of the City Engineer shall be altered from the Contract Documents by mention or inference otherwise in any reference document.

TESTING AND INSPECTION AGENCIES

A. Contractor shall employ and pay for services of an acredited testing agency to perform project specified testing and inspection. See Supplemental General Conditions and project specifications for specified testing.

B. Employment of agency or test results in no way relieves Contractor of obligation to perform Work in accordance with requirements of Contract Documents.

C. Contractor Employed Agency:

1. Testing agency: Comply with requirements of ASTM E 329, ASTM E 548, ASTM C 1093, ASTM E 543, ASTM C 1021, ASTM C 1077, ASTM C 1093, ASTM E 1212, and ASTM C 1579.
   a. Use the latest issue of the above reference standards as of the date of the Project.

2. Inspection agency: Comply with requirements of ASTM D290.

3. Laboratory: Authorized to operate in State in which Project is located.

4. Laboratory Staff: Maintain a full time registered Engineer on staff to review services.

5. Testing Equipment: Calibrated at reasonable intervals with devices of an accuracy traceable to either National Bureau of Standards or National Institute of Standards and Technology.

PART PRODUCTS NOT USED

PART EXECUTION

CONTROL OF INSTALLATION

A. Monitor quality control over suppliers, manufacturers, Products, services, site conditions, and workmanship, to produce Work of specified quality.

B. Comply with manufacturers' instructions, including each step in sequence.

C. Should manufacturers' instructions conflict with Contract Documents, request clarification from City Engineer before proceeding.

D. Comply with specified standards as minimum quality for the Work except where more stringent tolerances, codes, or specified requirements indicate higher standards or more precise workmanship.

E. Have Work performed by persons qualified to produce required and specified quality.

F. Verify that field measurements are as indicated on shop drawings or as instructed by the manufacturer.

G. Secure products in place with positive anchorage devices designed and sized to withstand stresses, vibration, physical distortion, and disfigurement.

TOLERANCES

A. Monitor fabrication and installation tolerance control of Products to produce acceptable Work. Do not permit tolerances to accumulate.

B. Comply with manufacturers' tolerances. Should manufacturers' tolerances conflict with Contract Documents, request clarification from City Engineer before proceeding.

C. Adjust Products to appropriate dimensions; position before securing Products in place.

TESTING AND INSPECTION

A. See individual specification sections for testing and inspection required.

B. Testing Agency Duties:

1. Provide qualified personnel at site every day to manage daily activities. Cooperate with City Engineer and Contractor in performance of services.

2. Perform specified sampling and testing of Products in accordance with specified standards.

3. Ascertain compliance of materials and mixes with requirements of Contract Documents.

4. Promptly notify City Engineer and Contractor of observed irregularities or non conformance of Work or Products.

5. Perform additional tests and inspections required by City Engineer.

6. Attend preconstruction meetings and progress meetings, when requested.

7. Submit reports of all tests/inspections specified.

C. Limits on Testing/Inspection Agency Authority:

1. Agency may not release, revoke, alter, or enlarge on requirements of Contract Documents.

2. Agency may not approve or accept any portion of the Work.

3. Agency may not assume any duties of Contractor.

4. Agency has no authority to stop the work without City's authorization.

D. Contractor Responsibilities:

1. Deliver to agency at designated location, adequate samples of materials proposed to be used which require testing, along with proposed mix designs.

2. Cooperate with laboratory personnel, and provide access to the Work.

3. Provide incidental labor and facilities:
   a. To provide access to Work to be tested/inspected.
   b. To obtain and handle samples at the site or at source of Products to be tested/inspected.
   c. To facilitate tests/inspections.

d. To provide storage and curing of test samples.

4. Notify City Engineer and laboratory 24 hours prior to expected time for operations requiring testing/inspection services.

5. Employ services of an independent qualified testing laboratory and pay for additional samples, tests, and inspections required by Contractor beyond specified requirements.

6. Arrange with Owner 's agency and pay for additional samples, tests, and inspections required by Contractor beyond specified requirements.

E. Re-testing required because of non-conformance to specified requirements shall be performed by the same agency on instructions by the City Engineer. Payment for re-testing will be charged to the Contractor by deducting testing charges from the Contract Sum/Price.

□□□□ MANU□ACTURERS□□IELD SER□ICES

A. When specified in individual specification sections, require material or Product suppliers or manufacturers to provide qualified staff personnel to observe site conditions, conditions of surfaces and installation, quality of workmanship, start-up of equipment, test, adjust and balance of equipment as applicable, and to initiate instructions when necessary.

B. Submit qualifications of observer to City Engineer 30 days in advance of required observations.

1. Observer subject to approval of City Engineer.

C. Report observations and site decisions or instructions given to applicators or installers that are supplemental or contrary to manufacturers' written instructions.

□□□□ DE□ECT ASSESSMENT

A. Replace Work or portions of the Work not conforming to specified requirements.

B. If, in the opinion of the City Engineer, it is not practical to remove and replace the Work, the City Engineer will direct an appropriate remedy or adjust payment.

END O□ SECTION

SECTION □□□□□

PRODUCT RE□UIREMENTS

PART □ GENERAL

□□□□ SECTION INCLUDES

A. General product requirements.

B. Transportation, handling, storage and protection.

C. Product option requirements.

D. Substitution limitations and procedures.

E. Spare parts and maintenance materials.

□□□□ RELATED SECTIONS

A. Section 01400 - Quality Requirements: Product quality monitoring.

□□□□ SUBMITTALS

A. Proposed Products List: Submit list of major products proposed for use, with name of manufacturer, trade name, and model number of each product.

   1. Submit within 15 days after date of Agreement.

   2. For products specified only by reference standards, list applicable reference standards.

B. Product Data Submittals: Submit manufacturer's standard published data. Mark each copy to identify applicable products, models, options, and other data. Supplement manufacturers' standard data to provide information specific to this Project.

C. Shop Drawing Submittals: Prepared specifically for this Project.

D. Provide written statement that materials and equipment being furnished are suitable and proper for the intended installations; that suppliers have investigated intended uses; and that items will satisfactorily perform and operate in the installations.

PART □ PRODUCTS

□□□□ PRODUCTS

A. Do not use materials and equipment removed from existing premises, except as specifically permitted by the Contract Documents.

B. Provide interchangeable components of the same manufacture for components being replaced.

□□□□ PRODUCT OPTIONS

A. Products Specified by Reference Standards or by Description Only: Use any product meeting those standards or description.

B. Products Specified by Naming One or More Manufacturers: Use a product of one of the manufacturers named and meeting specifications, no options or substitutions allowed.

C. Products Specified by Naming One or More Manufacturers with a Provision for Substitutions: Submit a request for substitution for any manufacturer not named.

PART □ E□ECUTION

□□□□ SUBSTITUTION PROCEDURES

A. Substitutions may be considered when a product becomes unavailable through no fault of the Contractor.

B. A request for substitution constitutes a representation that the submitter:

1. Has investigated proposed product and determined that it meets or exceeds the quality level of the specified product.

2. Will provide the same warranty for the substitution as for the specified product.

3. Will coordinate installation and make changes to other Work which may be required for the Work to be complete with no additional cost to Owner.

4. Waives claims for additional costs or time extension which may subsequently become apparent.

5. Will reimburse Owner and City Engineer for review or redesign services associated with re-approval by authorities.

C. Substitutions will not be considered when they are indicated or implied on shop drawing or product data submittals, without separate written request, or when acceptance will require revision to the Contract Documents.

D. Substitution Submittal Procedure:

1. Submit three copies of request for substitution for consideration. Limit each request to one proposed substitution.

2. Submit shop drawings, product data, and certified test results attesting to the proposed product equivalence. Burden of proof is on proposer.

3. The City Engineer will notify Contractor in writing of decision to accept or reject request.

□□□□ TRANSPORTATION AND HANDLING

A. Transport and handle products in accordance with manufacturer's instructions.

B. Promptly inspect shipments to ensure that products comply with requirements, quantities are correct, and products are undamaged.

C. Provide equipment and personnel to handle products by methods to prevent soiling, disfigurement, or damage.

□□□□ STORAGE AND PROTECTION

A. Store and protect products in accordance with manufacturers' instructions.

B. Store with seals and labels intact and legible.

C. Store sensitive products in weather tight, climate controlled, enclosures in an environment favorable to product.

D. For exterior storage of fabricated products, place on sloped supports above ground.

E. Cover products subject to deterioration with impervious sheet covering. Provide ventilation to prevent condensation and degradation of products.

F. Store loose granular materials on relatively solid, flat surfaces in a well-drained area. Prevent mixing with foreign matter.

G. Provide equipment and personnel to store products by methods to prevent soiling, disfigurement, or damage.

H. Arrange storage of products to permit access for inspection. Periodically inspect to verify products are undamaged and are maintained in acceptable condition.

END O□ SECTION

SECTION □□□□□

E□ECUTION RE□UIREMENTS

PART □ GENERAL

□□□□ SECTION INCLUDES

A. Examination, preparation, and general installation procedures.

B. Surveying for laying out the work.

C. Cleaning and protection.

D. Closeout procedures, except payment procedures.

□□□□ RELATED SECTIONS

A. Section 01300 - Administrative Requirements: Submittals procedures.

B. Section 01400 - Quality Requirements: Testing and inspection procedures.

C. Section 01780 - Closeout Submittals: Project record documents, operation and maintenance data, warranties and bonds.

□□□□ SUBMITTALS

A. Survey work: Submit name, address, and telephone number of Surveyor before starting survey work.

1. On request, submit documentation verifying accuracy of survey work.

2. Submit a copy of site drawing signed by the Land Surveyor, that the elevations and locations of the work are in conformance with Contract Documents.

3. Submit surveys and survey logs as for the project record.

B. Provide NOI (UPDES) permit prior to commencing work.

□□□□ □UALI□ICATIONS

A. For survey work employ a land surveyor registered in Utah and acceptable to City Engineer. Submit evidence of Surveyor's Errors and Omissions insurance coverage in the form of an Insurance Certificate.

B. For field engineering employ a professional engineer of the discipline required for specific service on Project, licensed in the State in which the Project is located.

□□□□ PRO□ECT CONDITIONS

A. Grade work areas to drain. Maintain excavations free of water. Provide, operate, and maintain pumping equipment.

B. Protect site from puddling or running water. Provide water barriers as required to protect site from soil erosion.

C. Ventilate enclosed areas to assist cure of materials, to dissipate humidity, and to prevent accumulation of dust, fumes, vapors, or gases.

D. Dust Control: Execute work by methods to minimize raising dust from construction operations. Provide positive means to prevent air-borne dust from dispersing into atmosphere.

E. Erosion and Sediment Control: Plan and execute erosion control plan during construction to control surface drainage from cuts and fills, from borrow and waste disposal areas. Prevent erosion and sedimentation.

1. Minimize amount of bare soil exposed at one time.

2. Provide temporary measures such as berms, dikes, and drains, to prevent water flow.

3. Construct fill and waste areas by selective placement to avoid erosive surface silts or clays.

4. Periodically inspect earthwork to detect evidence of erosion and sedimentation; promptly apply corrective measures.

F. Pollution Control: Provide methods, means, and facilities to prevent contamination of soil, water, and atmosphere from discharge of noxious, toxic substances, and pollutants produced by construction operations.

COORDINATION

A. Coordinate scheduling, submittals, and work of the various sections of the Project Manual to ensure efficient and orderly sequence of installation of interdependent construction elements, with provisions for accommodating items installed later.

B. Coordinate completion and clean-up of work of separate sections.

PART PRODUCTS

MATERIALS

A. New Materials: As specified in product sections; match existing products and work for patching and extending work.

B. Type and Quality of Existing Products: Determine by inspecting and testing products where necessary, referring to existing work as a standard.

C. Product Substitution: For any proposed change in materials, submit request for substitution described in Section 01600.

PART E ECUTION

E AMINATION

A. Document existing conditions with video and photographs. Verify that existing site conditions and substrate surfaces are acceptable for subsequent work. Beginning new work means acceptance of existing conditions.

B. Examine and verify specific conditions described in individual specification sections.

C. Prior to Cutting: Examine existing conditions prior to commencing work, including elements subject to damage or movement during cutting and patching. After uncovering existing work, assess conditions affecting performance of work. Beginning of cutting or patching means acceptance of existing conditions.

PREPARATION

A. Cut, move, or remove items as necessary for access to construction area. Replace and restore at completion where necessary.

B. Remove unsuitable material, such as brush, weeds, wood, metals, concrete and rocks. Load and haul

removed materials and dispose of in an acceptable manner.

LAYING OUT THE WORK

A. Verify locations of survey control points prior to starting work.

B. Promptly notify City Engineer of any discrepancies discovered.

C. Contractor shall locate and protect survey control and reference points.

D. Control datum for survey is that established by Owner provided survey.

E. Protect survey control points prior to starting site work; preserve permanent reference points during construction.

F. Promptly report to City Engineer the loss or destruction of any reference point or relocation required because of changes in grades or other reasons.

G. Utilize recognized engineering survey practices.

H. Establish elevations, lines, grades and elevations. Locate and lay out by instrumentation and similar appropriate means:

I. Periodically verify layouts by same means.

J. Maintain a complete and accurate log of control and survey work as it progresses.

GENERAL INSTALLATION REQUIREMENTS

A. Install Products as specified in individual sections.

B. Make neat transitions. Patch work to match adjacent work in texture and appearance. Where new Work abuts or aligns with existing, perform a smooth and even transition.

PROGRESS CLEANING

A. Maintain construction areas free of waste materials, debris, and rubbish. Maintain site in a clean and orderly condition.

B. Remove debris and rubbish from pipes and other closed spaces, prior to enclosing the space.

C. Collect and remove waste materials, debris, and rubbish from site periodically and dispose off-site.

D. Follow UPDES permit and SWPPP. Roads shall be kept free of debris and rubbish and shall be cleaned at the end of each workday as necessary.

PROTECTION OF INSTALLED WORK

A. Protect installed work and provide special protection where specified in individual specification sections.

B. Provide temporary and removable protection for installed Products. Control activity in immediate work area to prevent damage.

C. Prohibit traffic from landscaped areas.

D. Contractor responsible for all damage prior to acceptance.

FINAL CLEANING

A. Execute final cleaning prior to final project assessment.

B. Clean site; sweep paved areas, rake clean landscaped surfaces.

C. Remove waste and surplus materials, rubbish, and construction facilities from the site.

□□□□ CLOSEOUT PROCEDURES

A. Make submittals that are required by governing or other authorities.

1. Provide copies to City Engineer and Owner.

B. City Inspector shall accompany Project Coordinator on preliminary inspection to determine items to be listed for completion or
correction in Contractor's Notice of Substantial Completion.

C. Notify City Engineer when work is considered ready for Substantial Completion.

D. Submit written certification that Contract Documents have been reviewed, work has been inspected, and that work is complete in accordance with Contract Documents and ready for City Engineer's review.

E. Correct items of work listed in executed Certificates of Substantial Completion and comply with requirements for access to Owner-occupied areas.

F. City Inspector shall accompany Project Coordinator on preliminary final inspection.

G. Notify City Engineer when work is considered finally complete.

H. Complete items of work determined by Inspector or City Engineer's final inspection.

END O□ SECTION

SECTION □□□□□

CLOSEOUT SUBMITTALS

PART □ GENERAL

□□□□ SECTION INCLUDES

A. Project Record Documents.

B. Warranties and bonds.

□□□□ RELATED SECTIONS

A. Conditions of the Contract: Performance bond and labor and material payment bonds, warranty, and correction of work.

B. Section 01300 - Administrative Requirements: Submittals procedures, shop drawings, product data, and samples.

C. Section 01700 - Execution Requirements: Contract closeout procedures.

D. Individual Product Sections: Specific requirements for operation and maintenance data.

E. Individual Product Sections: Warranties required for specific products or Work.

F. Section 01785 - Project Evaluation.

□□□□ SUBMITTALS

A. Project Record Documents: Submit documents to City Engineer.

B. Warranties and Bonds:

1. For equipment or component parts of equipment put into service during construction with Owner 's permission, submit documents within ten days after acceptance.

2. Make other submittals within ten days after Date of Substantial Completion, prior to final Application for Payment.

3. For items of Work for which acceptance is delayed beyond Date of Substantial Completion, submit within ten days after acceptance, listing the date of acceptance as the beginning of the warranty period.

PART □ PRODUCTS □NOT USED

PART □ E□ECUTION

□□□□ PRO□ECT RECORD DOCUMENTS

A. Maintain on site one set of the following record documents; record actual revisions to the Work:

1. Drawings.

2. Specifications.

3. Addenda.

4. Change Orders and other modifications to the Contract.

B. Ensure entries are complete and accurate, enabling future reference by Owner.

C. Store record documents separate from documents used for construction.

D. Record information concurrent with construction progress.

E. Specifications: Legibly mark and record at each product section description of actual products installed, including the following:

1. Manufacturer's name and product model and number.

2. Changes made by Addenda and modifications.

F. Record Drawings: Legibly mark each item on approved construction drawings to record actual construction including:

1. Measured depths of foundations in relation to finish main floor datum.

2. Measured depths of manholes in relation to rim elevation.

3. Measured horizontal and vertical locations of underground utilities and appurtenances, referenced to permanent surface improvements.

4. Field changes of dimension and detail.

5. Details not on original Contract drawings.

G. Complete Pond Certification form and deliver to City.

END O□ SECTION

DIVISION 02

SITE CONSTRUCTION

SECTION 02100

ROADWAY AND GENERAL EARTHWORK

PART 1 GENERAL

1.01 SECTION INCLUDES

A. Excavating; filling and grading for street surfacing, concrete street improvements and appurtenances, as indicated on the drawings; removing and disposing of excess and unsuitable material; and compacting as required.

B. Removing vegetation, topsoil material; and stockpiling material on-site.

C. Removing and disposing of existing concrete items as indicated.

D. Backfilling, compacting and grading around and adjacent to new concrete work and paving, as indicated on the drawings.

E. Finish grading.

F. Dust control.

1.02 RELATED SECTIONS

A. Section 02112 - Trenching for Pipe Work: trenching and backfilling for pipe work.

B. Section 02115 - Structural Excavation: Building and foundation excavating.

C. Section 02116 - Fill and Backfill: Backfilling for project pipe lines and at structures.

1.03 SUBMITTALS

A. See Section 01300 - Administrative Requirements, for submittal procedures.

B. Samples, where required by the Engineer: 10 pound sample of each type of fill; submit to testing laboratory as directed by the laboratory.

C. Materials Sources: Submit name of imported materials source.

D. Fill Composition Test Reports: Results of laboratory tests on proposed and actual materials used.

E. Compaction Density Test Reports.

F. Project Record Documents: Accurately record actual locations of utilities remaining by horizontal dimensions, elevations or inverts, and slope gradients.

1.04 QUALITY ASSURANCE

A. Perform work in accordance with City of Saratoga Springs, Standards and Specifications Drawings.

1. Maintain one copy of standards on job site.

1.05 PROJECT CONDITIONS

A. Protect above- and below-grade utilities that remain.

B. Protect landscaping, such as plants, lawns, rock out-croppings, and other features, adjacent to work areas,

from excavating equipment and vehicular traffic.

C. Protect bench marks, survey control points, existing structures, fences, sidewalks, paving, and curbs from excavating equipment and vehicular traffic.

PART 2 PRODUCTS

2.01 FILL MATERIALS

A. See Section 02116 - Fill and Backfill.

PART 3 EXECUTION

3.01 PREPARATION

A. Identify required lines, levels, contours, and datum locations.

B. Locate, identify, and protect utilities that remain and protect from damage.

C. Notify utility company to remove and relocate utilities, where and as required.

D. Verify that survey bench mark and intended elevations for the Work are as indicated.

E. Identify any areas of collapsible soils within the work area, and inform the City Engineer of their locations.

F. Compact and proof roll subgrade as per City Standards & Specification. Verify Existing soil Conditions and the removal of unsuitable materials with City inspector.

3.02 EXCAVATING

A. Remove topsoil from areas to be further excavated, re-landscaped, or re-graded, without mixing with foreign materials.

B. Do not remove topsoil material when wet.

C. Excavate to lines, grades and cross-sections as indicated on the drawings.

D. Notify City Engineer of unexpected subsurface conditions and discontinue affected Work in area until notified to resume work.

E. All excavating shall be done according to OSHA Standards and all other applicable regulations.

F. Excavation and grading operations shall be conducted in such a manner so as to cause minimum inconvenience to adjacent property, including dust control.

G. Surfaces of excavated areas shall be maintained reasonable smooth at all times to ensure proper drainage. If existing drainage is interrupted, provide temporary facilities to re-route and maintain drainage so that adjacent properties are not damaged. Temporary drainage facilities shall be considered incidental to work involved; and shall be removed after work is completed.

H. When unsuitable material is encountered in excavated areas at subgrade elevations, excavate as required to remove unsuitable material and backfill areas with selected backfill material.

I. Remove large rocks and boulders encountered at subgrade elevations to a depth of not less than 6-inches below subgrade, and fill and compact excavation with suitable material.

J. Remove excess and unacceptable excavated material from site and dispose of in an acceptable manner.

K. See Section 02116 for backfilling and filling procedures.

L. Slopes: Slopes greater than 3:1 shall be stabilized with approved erosion control matting or as directed by a geotechnical Engineer.

M. Stability: Replace damaged or displaced subsoil to same requirements as for specified fill.

N. During construction, provide and maintain sufficient means and devices to promptly remove and properly dispose of all water entering excavations or other parts of the work.

1. Dispose of water from work area in an acceptable manner, without damage to adjacent property.

2. No pipe, concrete footings, foundations or floors shall be installed in water.

3. Water shall not be allowed to rise over concrete until it has set for at least 24 hours.

4. Water shall not be allowed to rise against walls and supporting beams for a period of 14 days after completion of walls and beams.

5. Any damage to pipe work or concrete work caused by water shall be repaired by the Contractor, at his expense.

O. The use of explosives will not be allowed; unless use has been specifically reviewed and accepted by the Engineer. All blasting shall be done by a reputable contractor specializing in the use of explosives, and is acceptable to the Engineer.

3.03 REMOVING MISCELLANEOUS CONCRETE ITEMS

A. Remove existing concrete curb and gutter, sidewalk, waterways, and driveway pavement as indicated and as directed by the Engineer.

B. Saw-cut existing concrete items at limit of removal as directed; break up and demolish the concrete item; and load, haul and dispose of concrete debris in an acceptable manner.

3.04 SOIL REMOVAL

A. Segregate excavated material at time of excavation into topsoil material, acceptable material, and unsuitable material, as determined by the City Engineer.

B. Stockpile topsoil to be re-used on site; remove excess material from site and dispose of in an acceptable manner.

C. Stockpile acceptable subsoil to be re-used on site; remove unacceptable and excess material from site and dispose of in an acceptable manner.

D. Stockpile materials separately in areas designated on site, within 200 feet of point of excavation; pile depth not to exceed four feet and protect from erosion.

3.05 BACKFILLING AND FILLING

A. Remove all vegetation, debris, unsuitable soil materials, obstructions and deleterious materials from designated areas prior to placement of backfills or fills.

B. Where existing ground surfaces have density less than that specified for particular area, plow area to required depth, pulverize existing material, moisture-condition to optimum moisture content and compact to required percentage of maximum density.

C. Place backfill and fill material in lifts approved by a Geotechnical Engineer. Moisture-control each layer to provide optimum moisture content of material; but keep moist enough at all times to provide dust control.

D. Compact each layer to required percentage of maximum density for each area classification.

E. Do not place backfill or fill material on surfaces that are soft, unsuitable, frozen or contain frost or ice.

F. See Section 02116 for backfilling and filling procedures.

G. Correct areas that are over-excavated.

1. Use structural fill, flush to required elevation, compacted to minimum 95 percent of maximum dry density.

H. Park strips shall be backfilled 3 inches below TBC.

3.06 COMPACTING

A. Compact backfill and fill material to provide not less than the following percentages of maximum density for each area classification:

1. Roadways: Under paving and similar construction, compact subgrade and each layer of backfill or fill material as specified in Section 02116.

2. Concrete Items: Under curb and gutter, sidewalks, and other concrete items, compact top 6-inches of subgrades and each layer of backfill or fill material as specified in section 02116.

3. Non-Landscaped Unpaved Areas: Compact each layer of backfill or fill material as specified in section 02116.

B. Moisture Control. Before compaction, moisture control subgrades or layers of backfill and fill material, as required, to achieve optimum moisture content of material.

1. For dry material, apply water uniformly to surface of material in a way that will prevent free water from appearing on surface during or after compaction operations.

2. For soil material that is too wet to allow compaction, remove and replace backfill or fill material, or scarify subgrade material and air dry, until desired moisture content is reached.

C. Proof roll as directed by City Inspector.

3.07 FINISH GRADING

A. Grade project areas uniformly to lines and grades, as indicated, including adjacent transition areas.

B. Finish surfaces shall be smooth and compact, with uniform levels or slopes between points where elevations are indicated, or between such points and existing grades, as directed.

C. Place topsoil in areas where seeding, sodding, and planting is indicated and as directed.

1. Place topsoil to the following compacted thicknesses:
   a. Areas to be seeded with grass: 6 inches.
   b. Areas to be sodded: 4 inches.
   c. Areas for shrub beds: 18 inches.
   d. Areas for flower beds: 12 inches.

2. Remove roots, weeds, rocks, and foreign material while spreading.

3. Near plants, spread topsoil manually to prevent damage.

4. Fine grade topsoil to eliminate uneven areas and low spots. Maintain profiles and contour of subgrade.

5. Lightly compact placed topsoil.

3.08 TOLERANCES

A. Top Surface of Subgrade: Plus or minus 1/10 foot from required elevations.

B. Top Surface of Finish Grade: Plus or minus 1/2 inch from required elevations.

3.09 FIELD QUALITY CONTROL

A. See Section 01400 - Quality Requirements, for general requirements for field inspection and testing.

B. See Section 02116 for compaction density and gradation testing.

C. Frequency of density testing: one test for each lift at 150 linear foot spacing for roadways, curb and gutter, sidewalks and other items, and as directed by the City Engineer or Inspector.

D. Frequency of gradation testing: One test prior to first lot and then 25 divided by City Inspector.

E. Proof Roll as directed by City Inspector

3.10 CLEAN-UP

A. Remove unused stockpiled materials, leave area in a clean and neat condition. Grade stockpile area to prevent standing surface water.

B. Leave borrow areas in a clean and neat condition. Grade to prevent standing surface water.

C. All disturbed areas shall be restored with native grasses to match adjacent areas, conforming to the City Standards and as acceptable to the City Engineer. These areas shall be seeded with material conforming to adjacent materials, as acceptable. Restored area shall achieve 70% plant coverage, and be free of erosion and invasive species prior to acceptance.

END OF SECTION

SECTION 02112

TRENCHING FOR PIPE WORK

PART 1 GENERAL

1.01 SECTION INCLUDES

A. Excavating, backfilling and compacting for project pipe lines.

1.02 RELATED SECTIONS

A. Section 02115 - Structural Excavation: Excavating for miscellaneous structures.

B. Section 02116 - Fill and Backfill: Backfilling for project pipe lines and at structures.

1.03 REFERENCES

A. Use latest issue of the reference standards as of the date of the project.

B. AASHTO T 99 - Moisture-Density Relations of Soils Using a 5.5-lb (2.5 kg) Rammer and a 12-inch Drop.

C. AASHTO T 180 - Moisture-Density Relations of Soils Using a 10-lb (4.54 kg) Rammer and an 18-inch Drop.

D. ASTM C 136 - Standard Test Method for Sieve Analysis of Fine and Coarse Aggregates.

E. ASTM D 698 - Test Method for Laboratory Compaction Characteristics of Soil Using Standard Effort (12,400 ft-lbf/ft3 (600 kN-m/m3)).

F. ASTM D 1556 - Standard Test Method for Density and Unit Weight of Soil in Place by the Sand-Cone Method.

G. ASTM D 1557 - Test Method for Laboratory Compaction Characteristics of Soil Using Modified Effort (56,000 ft-lbf/ft3 (2,700 kN m/m3)).

H. ASTM D 2167 - Standard Test Method for Density and Unit Weight of Soil in Place by the Rubber Balloon Method.

I. ASTM D 2487 - Standard Classification of Soils for Engineering Purposes (Unified Soil Classification System).

J. ASTM D 2922 - Standard Test Methods for Density of Soil and Soil-Aggregate in Place by Nuclear Methods (Shallow Depth).

K. ASTM D 3017 - Standard Test Method for Water Content of Soil and Rock in Place by Nuclear Methods (Shallow Depth).

L. ASTM D 4318 - Standard Test Method for Liquid Limit, Plastic Limit, and Plasticity Index of Soils.

M. Specification for Excavating on State Highways.

N. General Safety Orders Covering Utah Industries - Section 69, Trenches.

O. United States Department of Labor OSHA Publication 2085 - "Employer - Employee, Safe Practice for Excavation and Trenching Operations".

P. Utah Occupational Safety and Health Rules and Regulations - General Standard (UOSHA).

1.04 DEFINITIONS

A. Pipe Line Grades and Elevations: Indicated on drawings.

B. Trench Cross Sections: Indicated on standard trench detail drawings.

C. Subgrade Elevations: Bottom of road base in paved areas, as indicated on drawings.

D. Finish Grade Elevations: Top of pavement in paved areas, as indicated on drawings.

E. Ground Elevations: Indicated on the drawings.

1.05 SUBMITTALS

A. See Section 01300 - Administrative Requirements, for submittal procedures.

B. Samples, where required by the Engineer: 10 pound sample of each type of fill; submit to testing laboratory as directed by the laboratory.

C. Materials Sources: Submit name of imported materials source.

D. Fill Composition Test Reports: Results of laboratory tests on proposed and actual materials used.

E. Compaction Density Test Reports.

1.06 PROJECT CONDITIONS

A. Provide sufficient quantities of fill to meet project schedule and requirements. When necessary, store materials on site in advance of need.

B. When fill materials need to be stored on site, locate stockpiles where designated, as acceptable to the Engineer.

1. Separate differing materials with dividers or stockpile separately to prevent intermixing.

2. Prevent contamination.

3. Protect stockpiles from erosion and deterioration of materials.

C. Verify that survey bench marks and intended elevations for the work match design drawings.

D. Protect plants, lawns, and other features to remain.

E. Protect bench marks, survey control points, existing structures, fences, sidewalks, paving, curbs, and other improvements from excavating equipment and vehicular traffic.

PART 2 PRODUCTS

2.01 FILL MATERIALS

A. See Section 02116 - Fill and Backfill.

2.02 SOURCE QUALITY CONTROL

A. See Section 01400 - Quality Requirements, for general requirements for testing and analysis of soil material.

B. Where fill materials are specified by reference to a specific standard, testing of samples for compliance will

be provided before delivery to site.

C. If tests indicate materials do not meet specified requirements, change material and retest.

D. Provide materials of each type from same source throughout the Work.

PART 3 EXECUTION

3.01 EXAMINATION

A. Identify required lines, levels, contours, and datum locations.

B. Locate, identify, and protect utilities that remain and protect from damage.

C. Notify utility company to remove and relocate utilities, where and as required.

D. Identify any areas of collapsible soils within trench areas, and inform the City Engineer of their locations.

3.02 TRENCHING

A. Excavate trenches as required to allow project pipe to be installed to line and grade as indicated on the drawings.

B. Notify City Engineer of unexpected subsurface conditions and discontinue affected Work in area until notified to resume work.

C. All trenching shall be done according to OSHA Standards and other applicable regulations.

D. Do not interfere with 45 degree bearing splay of adjacent foundations.

E. Excavate trenches to width, depth and cross section as indicated on the trench detail drawings.

F. Hand trim excavations. Remove loose matter.

G. Remove large stones over 4 inches in diameter and other hard matter which could damage piping or impede consistent backfilling or compaction.

H. Remove excavated material that is unsuitable for re-use on the project from site and dispose of in an acceptable manner.

I. When unsuitable material is encountered in trenches at subgrade elevations, excavate as required to remove the unsuitable material and backfill areas with selected backfill material as directed by the Engineer.

J. Stockpile excavated material to be re-used in area designated on site.

K. Remove excess excavated material from site and dispose of in an acceptable manner.

L. Excavation beyond or below lines and grades indicated shall be refilled with fill material and compacted, at the Contractor's expense.

M. During construction, provide and maintain sufficient means and devices to promptly remove and properly dispose of all water entering excavations or other parts of the work.

1. Dispose of water from work area in an acceptable manner, without damage to adjacent property.

2. No pipe, concrete footings, foundations or floors shall be installed in water.

3. Water shall not be allowed to rise over concrete until it has set for at least 24 hours.

4. Water shall not be allowed to rise against walls and supporting beams for a period of 14 days after completion of walls and beams.

5. Any damage to pipe work or concrete work caused by water shall be repaired by the Contractor, at his expense.

N. The use of explosives will not be allowed; unless use has been specifically reviewed and accepted by the City Engineer. All blasting shall be done by a reputable contractor specializing in the use of explosives, and is acceptable to the City Engineer.

1. Comply with all laws, ordinances, and applicable safety code requirements and regulations relative to the handling, storage, and use of explosives and protection of life and property.

2. Contractor shall be fully responsible for all damage attributable to his blasting operations.

3. Excessive blasting or over shooting will not be permitted.

4. Remove any material outside of authorized cross-section which may be shattered or loosened by blasting operation.

3.03 PREPARATION FOR PIPE LINE PLACEMENT

A. Cut out soft areas of subgrade not capable of compaction in place. Backfill with bedding material, or stabilization material, or other acceptable material, as per section 02116.

B. Compact subgrade to density equal to or greater than requirements for subsequent fill material.

C. Until ready to backfill, maintain excavations and prevent loose soil from falling into excavation.

3.04 BACKFILLING

A. Backfilling shall conform to the requirements of Section 02116 - Fill and Backfill.

B. Backfill pipe zone with bedding material, or other acceptable material.

C. Backfill above pipe zone, up to subgrade or finish grade elevations, as indicated on the trench detail drawings.

D. Employ a placement method that does not disturb or damage project pipe or other work.

E. Do not backfill with wet or frozen materials.

F. Maintain optimum moisture content of fill materials to attain required compaction density.

G. Granular Fill: Place and compact materials in equal continuous layers not exceeding lifts approved by Geotechnical Engineer.

H. Soil Fill: Place and compact material in equal continuous layers not exceeding lifts approved by Geotechnical Engineer.

I. Where directed by the City Engineer, backfill material may be consolidated by an acceptable method.

J. Correct areas that are over-excavated.

1. Thrust bearing surfaces: Fill with concrete.

2. Use structural fill, flush to required elevation, compacted to minimum 95 percent of maximum dry density.

K. Compaction Density Unless Otherwise Specified or Indicated:

1. Under paving, concrete work, and similar construction: 95 percent of maximum dry density.

2. Within street rights-of-way: 95 percent of maximum dry density.

3. At other locations: 90 percent of maximum dry density.

L. Reshape and re-compact fills subjected to vehicular traffic.

3.05 BEDDING AND FILL AT SPECIFIC LOCATIONS

A. Project Pipe Lines:

1. Pipe Bedding: See Section 02116.

2. Backfill trench to subgrade or finish elevations with granular borrow. See Section 02116.

3. Compact bedding material in lifts approved by a Geotechnical Engineer to 95 percent of maximum dry density.

4. Compact backfill material in maximum lifts approved by a Geotechnical Engineer to 95 percent of maximum dry density.

3.06 TOLERANCES

A. Top Surface of Backfilling in unimproved areas: Plus or minus 1 inch from required elevations.

B. Top Surface of Backfilling in improved areas: Plus or minus 1/2 inch from required elevations.

3.07 FIELD QUALITY CONTROL

A. See Section 01400 - Quality Requirements, for general requirements for field inspection and testing.

B. Testing is to be done as per APWA standars and Specification; test results must be sent to the City Engineer or Inspector within 24 hours after the tests are completed.

C. Perform compaction density testing on compacted fill in accordance with ASTM D1556, ASTM D2167, ASTM D2922, or ASTM D3017.

1. Perform gradation testing in accordance with ASTM C136.

D. Evaluate results in relation to compaction curve determined by testing uncompacted material in accordance with ASTM D 698 ("standard Proctor"), ASTM D 1557 ("modified Proctor"), or AASHTO T 180.

E. If tests indicate work does not meet specified requirements, remove work, replace and retest.

F. Frequency of density tests: one test per lift per 150 linear foot of trench, and as directed by the City Engineer or Inspector.

G. Freqency of Gradation test: one test prior to first lot, then 25 as directed by City Inspector.

3.08 CLEAN-UP

A. Remove unused stockpiled materials, leave area in a clean and neat condition. Grade stockpile area to prevent standing surface water.

B. Leave borrow areas in a clean and neat condition. Grade to prevent standing surface water.

C. All disturbed areas shall be restored with native grasses to match vegetation in adjacent areas, conforming to the City Standards and as acceptable to the City Engineer. These areas shall be seeded with material conforming to adjacent materials, as acceptable. Restored area shall achieve 70% plant coverage, be free of erosions and invasive species prior to acceptance.

END OF SECTION

SECTION 02115

STRUCTURAL EXCAVATION

PART 1 GENERAL

1.01 SECTION INCLUDES

A. Excavating for structure volume below grade, footings, slabs-on-grade, paving, curb and gutter, sidewalks and other concrete work.

1.02 RELATED SECTIONS

A. Section 02112 - Trenching for Pipe Work: Excavating, backfilling and compacting for project pipe lines.

B. Section 02116 - Fill and Backfill: Fill materials, filling, and compacting.

1.03 PROJECT CONDITIONS

A. Verify that survey bench mark and intended elevations for the Work are as indicated.

B. Protect bench marks, survey control points, existing structures, fences, sidewalks, paving, and curbs from excavating equipment and vehicular traffic.

PART 2 PRODUCTS - NOT USED

PART 3 EXECUTION

3.01 PREPARATION

A. Identify required lines, levels, contours, and datum locations.

B. Locate, identify, and protect utilities that remain and protect from damage.

C. Identify any areas of collapsible soils within the work areas, and inform the City Engineer of their locations.

3.02 EXCAVATING

A. Excavate to accommodate new structures and construction operations to lines and elevations indicated.

B. Notify City Engineer of unexpected subsurface conditions and discontinue affected Work in area until notified to resume work.

C. All excavating shall be done according the OSHA Standards and other applicable safety regulations.

D. Do not interfere with 45 degree bearing splay of foundations.

E. Cut excavations wide enough to allow construction of structures as indicated; bottom dimensions shall be sufficient to provide at least 12 inches clear between extreme outside of concrete work and side of excavation. No tunneling or under cutting will be permitted.

F. Hand trim excavations. Remove loose matter.

G. Correct areas that are over-excavated and load-bearing surfaces that are disturbed; see Section 02116.

H. When unsuitable material is encountered in excavations at subgrade elevations, excavate as required to

remove unsuitable material and backfill areas with selected backfill material, as directed by the Engineer.

I. Grade top perimeter of excavation to prevent surface water from draining into excavation.

J. Remove excavated material that is unsuitable for re-use from site and dispose of in an acceptable manner.

K. Stockpile excavated material to be re-used in areas designated on site.

L. Remove excess excavated material from site and dispose of in an acceptable manner.

3.03 BACKFILLING

A. Backfilling shall conform to the requirements of Section 02116 - Fill and Backfill.

B. Backfill under structures with granular borrow, or other material acceptable to the City Engineer, and compact to 95 percent of maximum density.

C. Backfill around structures with granular borrow, or other material acceptable to the City Engineer, up to subgrade or finish grade elevations, as indicated, and compact to 95 percent of maximum density.

D. Employ placement method that will not disturb or damage structure.

E. Backfill shall be brought up uniformly around structures, so as to eliminate any possibility of unbalanced loading on structure which could damage or movement.

F. No backfill shall be placed against new concrete work until concrete has been accepted by the City Inspector; and backfill operation has been authorized.

G. Granular Fill: Place and compact materials in equal continuous layers not exceeding lifts approved by a Geotechnical Engineer.

H. Structural Backfill: Place and compact materials uniformly around structures in equal continuous layers not exceeding lifts approved by a Geotechnical Engineer.

I. Correct areas that are over-excavated with structural backfill material, compacted to minimum 95 percent of maximum dry density; at the Contractor's expense.

3.04 FIELD QUALITY CONTROL

A. See Section 01400 - Quality Requirements, for general requirements for field inspection and testing.

B. Provide for visual inspection of load-bearing excavated surfaces before placement of foundations.

C. Testing is to be done as indicated in Supplemental General Conditions; test results will be sent to the City Engineer within 24 hours after the tests are completed.

D. Perform compaction density testing on compacted backfill in accordance with ASTM D1556, ASTM D2167, ASTM D2922, or ASTM D3017, as listed in Section 02112.

E. Evaluate results in relation to compaction curve determined by testing uncompacted material in accordance with ASTM D 698 ("Standard Proctor"), ASTM D 1557 ("Modified Proctor"), or AASHTO T 180, as indicated in Section 02112.

F. If tests indicate work does not meet specified requirements, remove work, replace and re-test.

G. Frequency of Tests: as required and as directed by the City Engineer or Inspector.

3.05 PROTECTION

A. Prevent displacement of banks and keep loose soil from falling into excavation; maintain soil stability.

B. Protect bottom of excavations and soil adjacent to and beneath foundation from freezing.

3.06 CLEAN-UP

A. Remove unused stockpiled materials, leave area in a clean and neat condition. Grade stockpile area to prevent standing surface water.

B. All disturbed areas shall be restored with native grasses to match adjacent areas, conforming to the City Standards and as acceptable to the City Engineer. These areas shall be seeded with material conforming to adjacent materials, as acceptable. Restored area shall achieve 70% plan coverage prior to acceptance.

END OF SECTION

SECTION 02116

FILL AND BACKFILL

PART 1 GENERAL

1.01 SECTION INCLUDES

A. Backfilling and compacting for project pipe lines.

B. Filling, backfilling, and compacting for miscellaneous structures.

1.02 RELATED SECTIONS

A. Section 02112 - Trenching for Pipe Work: Excavating for project pipe lines.

B. Section 02115 - Structural Excavation: Excavating for structures.

1.03 REFERENCES

A. AASHTO T 99 - Moisture-Density Relations of Soils Using a 5.5-lb (2.5 kg) Rammer and an 12-inch Drop.

B. AASHTO T 180 - Standard Method of Test for Moisture-Density Relations of Soils Using a 10-lb (4.54 kg) Rammer and an 18-in.(457 mm) Drop; American Association of State Highway and Transportation Officials.

C. ASTM C 136 - Standard Test Method for Sieve Analysis of Fine and Coarse Aggregates.

D. ASTM D 698 - Test Method for Laboratory Compaction Characteristics of Soil Using Standard Effort (12,400 ft-lbf/ft3 (600 kN-m/m3)).

E. ASTM D 1556 - Standard Test Method for Density and Unit Weight of Soil in Place by the Sand-Cone Method.

F. ASTM D 1557 - Test Method for Laboratory Compaction Characteristics of Soil Using Modified Effort (56,000 ft-lbf/ft3 (2,700 kN m/m3)).

G. ASTM D 1883 - Standard Test Method for CBR (California Bearing Ratio) of Laboratory-Compacted Soils

H. ASTM D 2167 - Standard Test Method for Density and Unit Weight of Soil in Place by the Rubber Balloon Method.

H. ASTM D 2321 - Standard Practice for Underground Installation of Thermoplastic Pipe for Sewers and Other Gravity-Flow Applications.

I. ASTM D 2487 - Standard Classification of Soils for Engineering Purposes (Unified Soil Classification System).

J. ASTM D 2922 - Standard Test Methods for Density of Soil and Soil-Aggregate in Place by Nuclear Methods (Shallow Depth).

K. ASTM D 3017 - Standard Test Method for Water Content of Soil and Rock in Place by Nuclear Methods (Shallow Depth).

L. ASTM D 4318 - Standard Test Method for Liquid Limit, Plastic Limit, and Plasticity Index of Soils.

M. Use the latest issue of the above reference standards as of the date of the Project.

1.04 DEFINITIONS

A. Finish Grade Elevations: Indicated on drawings.

B. Subgrade Elevations: Indicated on drawings.

C. Pipe Invert Elevations: Indicated on drawings.

1.05 SUBMITTALS

A. See Section 01300 - Administrative Requirements, for submittal procedures.

B. Submit source documentation and mix design as per Article 2.02Materials Sources: Submit name of imported materials source.

C. Aggregate Composition Test Reports: Results of laboratory tests on proposed and actual materials used.

D. Compaction Density Test Reports per Article 1.05.

1.06 QUALITY CONTROL

A. See Section 01400 - Quality Requirements, for general requirements for field inspection and testing.

B. Perform quality control testing as per Table 1 unless otherwise directed by the City.

Table 1: Sampling and Testing Frequencies

	Roadway	Flatwork/Driveways	Backfill
Gradation and Plastic Index; ASTM C136[a], AASHTO T 90	Every 500 Tons	1 per day or Every 500 Tons[c]	
Density, ASTM D 5195[b]	Every 2500 SF	Every 150 LF or 2500 SF[c]	Every 150 LF
a. Report all sieves required for AASHTO Soil Classification and maximum particle size. b. Density target of 95% of Modified Proctor, ASTM D 1557. c. Use whichever frequency is greater.			

C. Submit test and inspection reports to the City in accordance with Section 01400.

D. If tests indicate work does not meet specified requirements, remove work, replace and retest.

1.07 ACCEPTANCE

A. The City will perform acceptance decisions for all projects. At the City's discretion, the City may accept the lot based on results of the quality control test results defined in Article 1.06.

1) A lot is equal to one day's production.
2) The City will reject the lot if the Contractor QC data is outside the limits of Table 1.
3) At the City's discretion, the City may perform acceptance testing in accordance with Table 1.

B. If tests indicate work does not meet specified requirements, remove work, replace and retest.

PART 2 PRODUCTS

2.01 FILL MATERIALS

A. Granular Borrow: Imported borrow or soil excavated on-site conforming to **Type A-1-a** of AASHTO Classification of Soils and Soil-Aggregate Mixtures.

1. Non-plastic (PI = 0), well graded as per Unified Soils Classification System (USCS) standards, 3-inch maximum

2. Free of debris and organic material

3. If geotechnical engineer is present during all phases and concurs, Common Borrow may be substituted for Granular Borrow in non-roadway applications..

4. Do not use material that does not have determinable proctor value.

5. At least 50% of granular borrow material should have fractured faces per ASTM D5821.

6. Use Granular Borrow with a minimum laboratory CBR value of 30%, ASTM D 1883.

B. Common Borrow: Imported borrow or soil excavated on-site conforming to **Type A-1-b** of AASHTO Classification of Soils and Soil-Aggregate Mixtures.

1. Well Graded as per Unified Soils Classification System (USCS) standards.

2. Free of rocks larger than 3 inches, organic matter and debris.

3. Do not use material that does not have determinable proctor value.

C. Concrete for Fill: Lean concrete.

1. Conforming to Flowable Fill, as per APWA Standard and Specifications section 31 05 15 (Cement Treated Flowable Fill).

D. 3/4" Free Draining Gravel: Angular crushed, washed stone; washed, free of shale, clay, friable material and debris.

1. Graded in accordance with ASTM C 136, within the following limits:
   a. 1 inch sieve: 100 percent passing.
   b. 3/4 inch sieve: 90 to 100 percent passing.
   c. 3/8 inch sieve: 30 to 65 percent passing.
   d. No. 4 sieve: 5 to 25 percent passing.
   e. No. 8 sieve: 0 to 10 percent passing.
   f. No. 16: 0 to 5 percent passing.
   g. No. 200 Sieve: 0 to 2 percent passing.

E. 1" Free Draining Gravel: Free draining granular backfill material; natural or crushed aggregate.

1. Graded in accordance with ASTM C-136, within the following limits:

   b. 1 inch sieve: 95 to 100 percent passing.
   c. 1/2 inch sieve: 25 to 60 percent passing.
   d. No. 4 sieve: 0 to 10 percent passing.
   e. No. 200 Sieve: 0 to 2 percent passing.

F. Sand: Non-plastic (PI=0); free of silt, clay, loam, friable or soluble materials, and organic matter.

1. Graded in accordance with ASTM C 136; within the following limits:
   a. No. 4 sieve: 100 percent passing.
   b. No. 16 sieve: 0 to 100 percent passing.
   c. No. 40 sieve: 0 to 100 percent passing.
   d. No. 100 sieve: 4 to 70 percent passing.
   e. No. 200 sieve: 0 to 20 percent passing.

G. Topsoil: Topsoil shall meet APWA standards & specifications (section 31 05 13).

H. On-Site Native Soil: Material excavated during trenching or other excavating operations; free of organic matter and debris.

1. On-site native soil may only be used as fill and backfill material if recommended by the developer's geotechnical engineer of record, and if acceptable to the City Engineer or City Inspector.
   a. Percentage of material passing the #200 sieve may be a maximum of 25 percent; based on the written recommendation of the geotechnical engineer.
   b. Testing frequency shall be as described in the City Standards, unless the testing frequency is increased as recommended by the geotechnical engineer of record.
   c. If backfill material is used with more than 15 percent passing the #200 sieve, the geotechnical engineer of record shall be on site during all backfill and compacting operations to ensure 95% compaction of trench backfill.

2. The geotechnical engineer of record shall define the moisture control, placement and compaction requirements needed for the native material to obtain 95% compaction of the trench backfill.

3. The Developers shall employ and pay for quality control services of the geotechnical engineer of record.

4. The geotechnical engineer shall prepare a letter or report summarizing:
   a. Testing methods, test frequencies and observations.
   b. Any non-conforming conditions and corrective actions taken to remedy the non-conformities.
   c. Compliance of the work to the City Standard Specifications.

5. The geotechnical engineer's letter or report shall be submitted to the City Engineer or City Inspector as described in the City Standards."

2.02 SOURCE QUALITY CONTROL

A. See Section 01400 - Quality Requirements, for general requirements for testing and analysis of soil material.

B. Materials Sources: Submit name of imported materials source and Aggregate Composition Test Reports demonstrating compliance with Article 2.01.

   a. Submit to the City at least 10 working days before placement.

C. If tests indicate materials do not meet specified requirements, change material and retest.

D. Provide materials of each type from same source throughout the Work.

PART 3 EXECUTION

3.01 EXAMINATION

A. Identify required lines, levels, contours, and datum locations.

B. Verify structural ability of unsupported walls to support imposed loads by the fill.

C. Proof roll as directed by City Inspector.

3.02 PREPARATION

A. Scarify subgrade surface to a depth of 6 inches to identify soft spots.

B. Cut out soft areas of subgrade not capable of compaction in place. Backfill with Granular Borrow.

C. Compact subgrade to density equal to or greater than requirements for subsequent fill material.

D. Until ready to fill, maintain excavations and prevent loose soil from falling into excavation.

3.03 FILLING

A. Fill to finish contours and elevations indicated using unfrozen materials.

B. Fill up to subgrade elevations where indicated.

C. Employ a placement method that does not disturb or damage other work.

D. Do not fill over porous, wet, frozen or spongy subgrade surfaces.

E. Maintain optimum moisture content of fill materials to attain required compaction density.

F. Granular Fill: Place and compact materials in equal continuous layers not exceeding 6 inches compacted depth.

G. Soil Fill: Place and compact material in equal continuous layers not exceeding Geotechnical Recommendations.

H. Slope grade away from building minimum 2 inches in 10 ft, unless noted otherwise. Make gradual grade changes. Blend project slopes into existing areas.

I. Correct areas that are over-excavated.

   1. In the ROW load-bearing foundation surfaces: Use granular borrow, flush to required elevation, compacted to 95 percent of maximum dry density.

   2. Other areas: Use common borrow, flush to required elevation, compacted to minimum 95 percent of maximum dry density.

J. Compaction Density Unless Otherwise Specified or Indicated:

   1. Under paving, slabs-on-grade, and similar construction: 95 percent of maximum dry density.

   2. Under structures: 95 percent of maximum dry density.

   3. At other locations: 90 percent of maximum dry density.

K. Reshape and re-compact fills subjected to vehicular traffic.

3.04 FILL AT SPECIFIC LOCATIONS

A. Fill in unimproved areas: (Outside right-of-way)

   1. Use Common Borrow, unless otherwise specified or indicated.

   2. Fill to finish grade elevations

   3. Maximum depth per lift: 12 inches, compacted.

   4. Consolidate to minimum 95 percent of maximum dry density.

B. Granular Borrow around structures and embankments:

   1. Use Granular Borrow as per the Geotechnical Engineer.

   2. Fill up to subgrade elevations.

   3. Maximum depth per lift: 12 inches, compacted.

4. Compact to minimum 95 percent of maximum dry density.

5. Foundation walls and footings, as per geotechnical Engineering Recommendations. Backfill simultaneously on each side of unsupported foundation walls until supports are in place.

C. Bedding and Backfill for Pipe Lines in Trenches:

1. Pipe Bedding: Within pipe zone - use the following:
   a. Around and to one foot over PVC pressure pipe, use bedding sand.
   b. Around and to one foot over ductile iron pressure pipe, use bedding sand.
   c. Around and to one foot over PVC sewer pipe, use ¾" to 1 " free draining gravel as approved by City Engineer.
   d. Around and to the top of concrete drain pipe, use ¾" to 1 " free draining gravel as approved by City Engineer.

D. Trench Backfill: Above pipe zone - use granual borrow.

1. Fill up to subgrade elevation or natural ground level.

2. Compact trench backfill in maximum 12 inch lifts to 95 percent of maximum dry density.

E. At Landscaped Areas:

1. Use Common Borrow or approved material.

2. Fill up to 6 inches below finish grade elevations.

3. Compact to 90 percent of maximum dry density.

3.05 TOLERANCES

A. Top Surface of General Filling: Plus or minus 1 inch from required elevations.

B. Top Surface of Filling Under Paved Areas: Plus or minus 1/2 inch from required elevations.

C. "Red Head" staking and "string test" required for finish grade verification.

3.06 PROJECT CONDITIONS

A. Provide sufficient quantities of fill to meet project schedule and requirements. When necessary, store materials on site in advance of need.

B. When fill materials need to be stored on site, locate stockpiles where designated.

1. Separate differing materials with dividers or stockpile separately to prevent intermixing.

2. Prevent contamination.

3. Protect stockpiles from erosion and deterioration of materials.

C. Verify that survey bench marks and intended elevations for the Work are as indicated.

3.07 CLEAN-UP

A. Remove unused stockpiled materials, leave area in a clean and neat condition. Grade stockpile area to prevent standing surface water.

B. Leave borrow areas in a clean and neat condition, grade to prevent standing surface water.

C. All disturbed areas shall be restored with native grasses to match adjacent areas, conforming to the City Standards and as acceptable to the City Engineer. These areas shall be seeded with material conforming to adjacent materials, as acceptable. Restored area shall achieve 70% plant coverage, free of erosion & invasive species, prior to acceptance.

END OF SECTION

SECTION 02235

SANITARY SEWER SYSTEM

PART 1 GENERAL

1.01 SECTION INCLUDES

A. Sanitary sewer piping, fittings and accessories.

B. Casing pipes and accessories.

C. Connection of project pipe to existing manholes.

D. Sewer Service Connections.

1.02 RELATED SECTIONS

A. Section 02112 - Trenching for Pipe Work: Excavating of trenches.

B. Section 02116 - Fill and Backfill: Pipe bedding and trench backfilling.

C. Section 02340 - Manholes and Covers.

D. Section 03300 - Cast-In-Place Concrete: Concrete for manhole base construction.

1.03 REFERENCES

A. ASTM D 2321 - Standard Practice for Underground Installation of Thermoplastic Pipe for Sewers and Other Gravity-Flow Applications.

B. ASTM D 3034 - Standard Specification for Type PSM Poly(Vinyl Chloride) (PVC) Sewer Pipe and Fittings.

C. ASTM F 477 - Standard Specification for Elastomeric Seals (Gaskets) for Joining Plastic Pipe.

D. ASTM F 679 - Standard Specification for Poly(Vinyl Chloride) (PVC) Large-Diameter Gravity Sewer Pipe and Fittings; 18-inch through 24-inch smooth solid wall sewer pipe.

E. Use the latest issue of the above reference standards as of the date of the Project.

1.04 DEFINITIONS

A. Pipe Bedding: Fill placed within the pipe zone, which is under, beside and directly over pipe, prior to subsequent backfill operations; see standard trench detail drawing.

1.05 SUBMITTALS

A. See Section 01300 - Administrative Requirements, for submittal procedures.

B. Product Data: Provide data indicating pipe, pipe accessories, and fittings.

C. Manufacturer's Installation Instructions: Indicate special procedures required to install Products specified.

D. Manufacturer's Certificate: Certify that products meet or exceed specified requirements.

E. Project Record Documents:

1. Record location of pipe lines, connections, manholes, sewer laterals, and invert elevations.

2. Identify and describe unexpected variations to subsoil conditions or discovery of uncharted utilities.

1.06 REGULATORY REQUIREMENTS

A. Conform to applicable code for materials and installation of the Work of this section.

1.07 PROJECT CONDITIONS

A. Coordinate the Work on sewer lines and connections to existing manholes with the City Engineer or City Inspector.

PART 2 PRODUCTS

2.01 SEWER PIPE MATERIALS

A. Plastic Pipe: ASTM D 3034, Type PSM, Poly(Vinyl Chloride) (PVC) material; inside nominal diameter of 4 inches through 15 inches, bell and spigot joint ends with gaskets.

B. Plastic Pipe: ASTM F 679, Poly(Vinyl Chloride) (PVC) material; inside nominal diameter of 18 inches through 24 inches, bell and spigot joint ends with gaskets.

C. Joint Seals for Plastic Pipe: ASTM C 477 rubber compression gaskets for positive seal.

D. Fittings: Same material as pipe, molded or formed to suit pipe size and end design, in required configurations.
   1. Clean outs shall be cast iron in non-residential applications and as specified by International Pumping Code.

2.02 CASING PIPE MATERIALS

A. Welded Steel Pipe: AWWA C 200, steel water pipe; diameter as indicated.

B. Casing Insulators: fusion coated steel casing insulators with 12-inch wide band and 2-inch wide glass reinforced plastic runners; Model C12G-2, manufactured by Pipeline Seal and Insulator, Inc. or acceptable equal.

C. Casing End Seals: flexible S-shaped seals fabricated on synthetic rubber with stainless steel bands and clamps; Model S Pull-On End Seals, manufactured by Pipeline Seal and Insulator, Inc., or acceptable equal.

2.03 BEDDING AND COVER MATERIALS

A. Pipe Bedding Material: As specified in Section 02116.

B. Trench Backfill Material: As specified in Section 02116.

PART 3 EXECUTION

3.01 TRENCHING

A. See Section 02112 for trenching; Sections 02115 and 02116 for structural excavation and fill and backfill.

B. Hand trim excavation for accurate placement of pipe to elevations indicated.

C. Backfill pipe zone with bedding material, tamp in place and compact; then complete backfilling of trench and compact.

3.02 INSTALLATION - SEWER PIPE

A. Verify that trench cut is ready to receive work and excavations, dimensions, and elevations are as indicated on project plan and profile drawings.

B. Install pipe, fittings, and accessories in accordance with appropriate ASTM standards and manufacturer's instructions. Seal joints watertight.

C. Install pipe to alignment and slope gradients noted on project drawings; with maximum variation from design alignment of 0.25 foot and from design elevations of 0.10 foot. As-built pipe slope shall meet design slope within 10% error of design grade.

3.03 INSTALLATION - CASING PIPES

A. See Sections 02115 and 02116 for structural excavation and fill and backfill; and for additional requirements.

B. Install casing pipes by ramming process where indicated; method to be acceptable to the City Engineer.

C. Install casing pipes at the line and grade as required to allow carrier pipes to be installed within the casing pipes at the design line and grade, as indicated on the drawings.

D. Place casing insulators on carrier pipes to properly center and position carrier pipe inside the casing pipes; space insulators as recommended by the pipe manufacturer.

E. Carrier Pipe inside of casing shall have restrained joints as approved by the City Engineer.

F. Seal each end of casing with appropriate size flexible end seals; install according to manufacturer's instructions and recommendations.

G. Seal bore holes at each end, around periphery of casing, with grout, impervious clay or brick masonry, as acceptable to the City Engineer or City Inspector.

H. Contractor shall be solely responsible for the accuracy, safety and adequacy of construction methods and procedures for installing casing pipes, and for any damage which may result from their failure. All operations of the Contractor for installation of casing pipes shall be subject to approval by the agency having jurisdiction over the item being crossed.

I. Contractor shall enter any agreement with, and furnish any and all indemnity and other bonds that may be required by, the agency listed above, for their protection against injury and interference with flow of water caused by the operations of the Contractor.

J. Contractor shall secure required permission from the agency listed above before commencing with the installation of casing pipes and related work along and across the respective areas.

3.04 CONNECT PROJECT PIPE INTO EXISTING SEWER MANHOLE

A. See Sections 02115 and 02116 for structural excavation and fill and backfill.

B. Connection of project pipe into existing sewer manhole shall include:

1. All excavating required for the connection; and backfilling excavations after the connection is completed, and compacting backfill as required.

2. Removing existing pipes where and if required.
   a. Cleaning existing hole through wall and base of existing manhole; and preparing hole for connection, as required and as directed.

3. Core-cutting hole through wall and base of existing manhole, where required, with appropriate size

coring machine; and preparing hole for connection, as required and as directed.

4. Installing new pipe in place and connecting to manhole wall with appropriate type flexible coupling, as recommended by the coupling manufacturer.

5. Reforming manhole floor and invert channel to provide smooth channel transitions to accommodate new connected pipes.

6. Sealing around new pipe with non shrink grout where it intersects manhole wall; make connection watertight.

7. Perform all other operations necessary to restore existing manhole to condition acceptable to the City Engineer or City Inspector.

C. If existing manhole does not have steps, connection shall also include furnishing and installing new manhole steps. Steps shall be installed as described in Section 02340, Manholes.

D. Provide temporary facilities to divert existing sewer flow around work areas as described in Supplemental General Conditions of these specifications.

3.05 SEWER SERVICE CONNECTIONS

A. Sewer service lines shall extend from a 4-inch or 6-inch wye branch placed in the sewer main, as indicated on the drawings or as directed by the City Engineer or City Inspector.

1. Normally, a 22 1/2 degree or 45 degree bend, rotated so that proper alignment and grade is established, shall be installed in the main line wye branch.

2. In some instances, the bend may be omitted; and in some instances, two bends may be required.

B. Sewer service lines shall extend to a location designated by the City Engineer or City Inspector, which will be near the property line of the property to be served, or at the edge of a permanent easement, as indicated on the drawings and as directed.

C. All pipe and fittings shall be heavy wall PVC sewer pipe conforming to the specifications found elsewhere in this Section.

D. Installation:

1. Pipe and fittings for sewer service lines shall be installed as described herein and as directed by the City Engineer or City Inspector.

2. 4-inch and 6-inch sewer laterals shall be installed at a minimum slope of 1/4-inch per foot, which is about a 2.0 percent grade; unless approved otherwise by the City Engineer.

3. Sewer service lines shall be installed at a uniform grade and alignment; and shall be free of low spots or adverse grades.

E. Cleaning and Testing.

1. Sewer service lines shall be cleaned, flushed and tested in accordance with applicable requirements of this Section.

2. After flushing and testing have been completed, the end of the service line shall be plugged until the home or business is connected.

3.06 CONSTRUCTING COLLARS AROUND EXISTING MANHOLE COVERS

A. Construct collars around existing manhole covers after street pavement has been restored.

B. Collars shall be constructed according to City standards.

3.07 FIELD QUALITY CONTROL

A. Clean and Flush new sewer pipe as follows.

1. Take every precaution to prevent dirt, grease, and all other foreign matter from entering each length of pipe before making connections in field.

2. After each section of piping is installed, it shall be thoroughly cleaned to remove rocks, dirt, and other foreign matter by washing, sweeping, scraping or other methods that will not harm lining of pipe.

3. For safety and to prevent rocks and other foreign matter from entering pipe, all open ends of pipe shall be plugged when workmen are not on the job or in the immediate area.

4. Flushing and testing shall be completed by the Contractor.

5. All temporary water connections for flushing and drainage shall be furnished, installed, and subsequently removed by the Contractor after completion of the operation.

B. Perform field inspection and testing in accordance with Section 01400 and 02112.

C. Pipe installation shall be inspected by the City Engineer or Inspector prior to backfilling of trench; backfilling will be done only after it is authorized by the City Engineer or City Inspector.

D. If tests indicate Work does not meet specified requirements, remove Work, replace and retest at no cost to City.

E. Test for Leakage: Test all pipe, fittings and other items for leakage, in presence of City Engineer or City Inspector, after items have been cleaned. All joints, couplings, fittings shall be watertight.

1. Infiltration Test. Infiltration test required when pipe is below ground water level. Amount of water leaking into pipe shall be measured. Leakage for concrete pipe shall not be more than one gallon per day per inch diameter per mile of pipe; and for PVC sewer pipe shall not be more than one gallon per day per inch diameter per mile of pipe.

2. Exfiltration Test. Exfiltration test required when pipe is above ground water level. The section of pipe being tested, including upstream manhole, shall be filled with water to not less than four feet nor more than eight feet above the lowest point of section being tested Amount of water added during test period to maintain water level shall be measured. Amount of water added for concrete pipe shall not be more than one gallon per day per inch diameter per mile of pipe; and for PVC sewer pipe shall not be more than one gallon per day per inch diameter per mile of pipe..

3. Air Test: Low pressure air test may be performed. Section of pipe being tested shall be sealed; line under test shall be pressurized to approximately 3.5 psi; and pressure allowed to stabilize for a minimum of two minutes. During this period air shall be added if pressure drops below 3.5 psi. After this stabilization period, timing shall begin. The time of test, in minutes, shall be equal to the pipe diameter in inches. The maximum allowable pressure drop during specified time period shall be 1.0 psi.

F. Deflection Test, PVC Sewer Pipe: After PVC sewer pipe has been cleaned, perform deflection test on each section of pipe line between manholes. The maximum allowable pipe deflection, the reduction in vertical inside diameter, shall be 5 percent. Maximum allowable deflection shall be applied to the base inside diameters shown in Table 63, Base Inside Diameters For Deflection Measurements of ASTM D 3034 SDR35 PVC Sewer in the Uni-Bell "Handbook of PVC Pipe", to determine minimum permissible diameter, or other appropriate sources. Testing devices shall include deflectometer, calibrated television or photography, or properly sized mandrel or sewer ball.

G. Televise Sewer Lines. After pipe lines have been tested for leakage and deflection, the main sewer lines shall be televised, along with appropriate narrative, by company specializing in this type work. A copy of the videotape shall be provided to the City Engineer. Video shall be provided on a CD and shall be in color by a camera capable of pan and tilt capabilities. Maximum speed shall be 20' per minute. Video shall be continuous with steady stream of water running in pipe as directed by City Inspector.

3.08 PROTECTION

A. Protect pipe and bedding material from damage or displacement until backfilling operation is in progress.

END OF SECTION

SECTION 02335

STORM DRAIN SYSTEM

PART 1 GENERAL

1.01 SECTION INCLUDES

A. Storm drain pipe, fittings, and accessories.

B. Connection of project storm drain pipe line to existing storm drains.

C. Cleanout boxes, gutter inlet boxes, inlet boxes, diversion boxes, and appurtenant items.

D. Storm water treatment systems.

1.02 RELATED SECTIONS

A. Section 02112 - Trenching for Pipe Work: Excavating, bedding, backfilling and compacting.

B. Section 02115 - Excavation: Excavating for structures and appurtenant items.

C. Section 02116 - Fill and Backfill: Bedding and backfilling.

D. Section 02340 - Manholes and Covers.

E. Section 03300 - Cast-in-Place Concrete: Concrete for miscellaneous construction.

1.03 REFERENCES

A. ASTM C 14 - Standard Specification for Concrete Sewer, Storm Drain, and Culvert Pipe.

B. ASTM C 76 - Standard Specification for Reinforced Concrete Culvert, Storm Drain, and Sewer Pipe.

C. ASTM C 443 - Standard Specification for Joints for Circular Concrete Sewer and Culvert Pipe, Using Rubber Gaskets.

D. Use the latest issue of the above reference standards as of the date of the Project.

1.04 DEFINITIONS

A. Bedding: Fill placed under, beside and directly over pipe, prior to subsequent backfill operations.

1.05 SUBMITTALS

A. See Section 01300 - Administrative Requirements, for submittal procedures.

B. Product Data: Provide data indicating pipe, pipe accessories, and miscellaneous structures.

C. Manufacturer's Installation Instructions: Indicate special procedures required to install Products specified.

D. Manufacturer's Certificate: Certify that products meet or exceed specified requirements.

E. Project Record Documents:

1. Record location of pipe lines, connections, cleanouts, gutter inlet boxes, inlet boxes, miscellaneous structures and invert elevations.

2. Identify and describe unexpected variations to subsoil conditions or discovery of uncharted utilities.

1.06 REGULATORY REQUIREMENTS

A. Conform to applicable code for materials and installation of the Work of this section.

1.07 PROJECT CONDITIONS

A. Coordinate the Work with other contractor working in the area.

PART 2 PRODUCTS

2.01 DRAIN PIPE MATERIALS

A. Concrete Pipe: Nonreinforced, ASTM C 14 (ASTM C 14M), Class 3 minimum; inside nominal diameter as indicated, bell and spigot end joints.

B. Concrete Pipe: Reinforced, ASTM C 76 (ASTM C 76M), Class III minimum with Wall type B; mesh reinforcement; inside nominal diameter as indicated, bell and spigot end joints.

C. Reinforced Concrete Pipe Joint Device: ASTM C 443 (ASTM C 443M), rubber compression gasket joint.

2.02 PIPE ACCESSORIES

A. Fittings: Same material as pipe molded or formed to suit pipe size and end design, in required tee, bends, elbows, cleanouts, reducers, traps and other configurations required.

B. Trash Grates: shall be fabricated galvanized steel grates of design and size required and acceptable to the City Engineer.

2.03 STORM DRAIN STRUCTURES

A. Frames and Covers: Heavy duty cast iron, as indicated or acceptable equal; designed for H-20 highway loading.

1. Gutter Inlet Box:
   a. Lid Design: bicycle proof design grate; size and type as indicated.

2. Cleanout box:
   a. Lid Design: solid, with pick holes; size and type as indicated.

3. Inlet Box:
   a. Lid Design: bicycle proof design grate; size and type as indicated.

4. Manholes: see Section 02340.

B. Precast Box: type and size as indicated; minimum wall thickness of 6-inches, minimum top and bottom slab thickness of 8-inches; design for H-20 highway loading; sleeved to receive storm drain pipe sections. Concrete work shall conform to Section 03300.

C. Cast-in-Place Box: of type and size indicated; concrete work shall conform to Section 03300; sleeved to receive storm drain pipe sections.

D. Joint Filler: flexible, bituminous mastic, gasket type sealant.

2.04 BEDDING AND BACKFILL MATERIALS

A. Bedding: As specified in Sections 02112 and 02116.

B. Backfill: As specified in Sections 02112 and 02116.

PART 3 EXECUTION

3.01 TRENCHING

A. See Section 02112, Trenching for Pipe Work, and Sections 02115 and 02116 for additional requirements.

B. Hand trim excavation for accurate placement of pipe to elevations indicated.

C. Backfill around pipe with bedding material as indicated, tamp in place and compact; then complete backfilling.

3.02 INSTALLATION - PIPE

A. Verify that trench cut is ready to receive work and excavations, dimensions, and elevations are as indicated on drawings.

B. Install concrete pipe, fittings, and accessories in accordance with manufacturer's instructions. Seal Watertight and provide concrete collar on exterior of manhole or junction box. Seal with non-shrink grout on interior of manhole or box.

C. Install pipe to slope gradients noted on drawings; with maximum variation of 10% of the design slope.

D. Connect to existing storm drain boxes as indicated.

E. Install trash grates over the ends of all exposed pipe, 15-inch diameter and larger. Installation shall be acceptable to the City Engineer.

3.03 INSTALLATION - STORM DRAIN STRUCTURES

A. Trim bottom of excavation clean and smooth to correct elevation; place bedding as indicated.

B. Install precast boxes plumb, according to the manufacturer's instructions, at the design elevations as indicated; connect project pipes with appropriate type flexible couplings.

C. Construct cast-in-place concrete boxes, as indicated; connect project pipes with appropriate type flexible couplings.

D. Establish elevations and pipe inverts for inlets and outlets as indicated.

E. Install lid and frame level in top slab of box, as indicated, according to manufacturer's instructions.

F. Fill all joints between box sections, grade rings, and cover frames with joint sealant.

3.04 INSTALLATION - STORM WATER TREATMENT SYSTEMS

A. Storm water treatment systems shall be constructed where and as required applicable regulations and requirements, and as directed by the City Engineer.

3.05 FIELD QUALITY CONTROL

A. Perform field inspection and testing in accordance with Section 01400 and 02112.

B. If tests indicate Work does not meet specified requirements, remove Work, replace and retest at no cost to Owner.

C. Infiltration Test: Infiltration test required when pipe line is below groundwater level. The amount of water leaking into the pipe shall be measured; allowable infiltration shall be one gallon per day per inch diameter of

pipe per mile of pipe.

D. Exfiltration Test: Exfiltration test required when pipe line is above groundwater level. The section of pipe to be tested, including upstream structure, shall be filled with water to not less than four feet nor more than eight feet above lowest point of pipe section being tested. The amount of water added during the test period to maintain water level shall be measured; allowable exfiltration shall be one gallon per day per inch diameter of pipe per mile of pipe. An air test per manufactures recommendation may be permitted in leiu of exfiltration test as accepted to City Inspector.

E. Deflection Test: Check alignment by sighting through pipe or by measurements. Pipe lines shall not vary from horizontal alignment shown on the drawings by more than 0.25 foot.

F. Televise Sewer Lines. After pipe lines have been tested for leakage and deflection, the main sewer lines shall be televised, along with appropriate narrative, by company specializing in this type work. A copy of the videotape shall be provided to the City Engineer. Video shall be provided on a CD and shall be in color by a camera capable of pan and tilt capabilities. Maximum speed shall be 20' per minute. Video shall be continuous with steady stream of water running in pipe as directed by City Inspector.

3.06 PROTECTION

A. Protect pipe and bedding cover from damage or displacement until backfilling operation is in progress.

END OF SECTION

SECTION 02340

MANHOLES AND COVERS

PART 1 GENERAL

1.01 SECTION INCLUDES

A. Monolithic cast-in-place concrete manholes with masonry or precast transition to lid frame, covers, anchorage, and accessories.

B. Modular precast concrete manhole sections with tongue-and-groove joints, precast transition to lid frame, covers, anchorage, and accessories.

1.02 RELATED SECTIONS

A. Section 03300 - Cast-In-Place Concrete.

1.03 REFERENCES

A. ASTM A 48 - Standard Specification for Gray Iron Castings.

B. ASTM C 478 - Standard Specification for Precast Reinforced Concrete Manhole Sections.

C. ASTM C 923 - Standard Specification for Resilient Connectors Between Reinforced Concrete Manholes Structures, Pipes and Laterals.

D. Use the latest issue of the above reference standards as of the date of the Project.

1.04 SUBMITTALS

A. See Section 01300 - Administrative Requirements, for submittal procedures.

B. Shop Drawings: Indicate manhole locations, elevations, piping sizes and elevations of pipe inverts.

C. Product Data: Provide manhole covers, component construction, manhole steps, features, configuration, and dimensions.

1.05 QUALITY ASSURANCE

A. Manufacturer: Company specializing in manufacturing products specified in this section with at least three years of documented experience.

PART 2 PRODUCTS

2.01 MANUFACTURERS

A. Amcor-White, Inc.

B. Geneva Pipe Company.

C. Substitutions: See Section 01600 - Product Requirements.

2.02 MATERIALS

A. Manhole Sections: Reinforced precast concrete in accordance with ASTM C 478 (ASTM C 478M), with gaskets in accordance with ASTM C 923 (ASTM C 923M).

B. Concrete: As specified in Section 03300.

C. Concrete Reinforcement: As specified in Section 03300.

D. Manhole Lining: Epoxy coating or acceptable equal in accordance to manufacture specifications.

2.03 COMPONENTS

A. Manhole Base: precast concrete manhole base of appropriate size.

1. Provide appropriate size flexible sleeves of synthetic rubber, with stainless steel clamps and bolts, for all pipe openings in base section.

2. Construct poured-in-place manhole base where manhole is to be constructed over existing sewer pipe line, as directed by the Engineer. Manhole base shall be constructed as indicated on the drawings.

B. Manhole Rise Sections: precast riser sections of appropriate size and length, extending from top of base section to bottom of top section.

C. Manhole Top Section: precast eccentric cone section of appropriate size, with 30-inch diameter top opening.

1. Flat slab top sections can be used only where indicated on the plan drawings and accepted by the City Engineer or City Inspector; designed for H-20 live loading and one-foot minimum earth cover.

D. Joints: Base section, riser sections, and top section shall have lipped male/female ends, which shall provide uniform and continuous interior wall surface.

1. Joints shall be sealed with pre-lubricated rubber gaskets, conforming to requirements of ASTM C 443 and C 361; Forsheda No. 114 Seal, manufactured by Forsheda Pipe Seal Company, or equal.

E. Grade Rings: precast grade rings, as required, to adjust height of manhole lid and frame.

1. Grade rings shall have key locks and use flexible, bituminous mastic, gasket-type sealer to insure watertight installation.

2. Maximum height of grade rings shall be 12 inches.

F. Lid and Frame: ASTM A 48, Class 30B Cast iron construction, machined flat bearing surface, removable lid with cleated surface and pick holes, solid lockable lids if indicated, vented lid design in improved areas and solid lid design in unimproved areas, H-20 highway load rating; lid molded with identifying name. Provide Model A-1180 manufactured by D & L Supply., or acceptable equal. Lids shall be marked with “SARATOGA SPRINGS” and with either “WATER”, “SEWER”, “PRESSURE IRRIGATION”, or “STORM DRAIN”, as applicable and as directed. Manholes with solid lids shall be epoxy lined as per City Engineer.

G. Manhole Steps: Formed, copolymer polypropylene-encased, steel rungs; 3/4 inch diameter minimum. Cast-in-place or vibrate into green concrete. Model PSI-FF manhole steps, manufactured by M. A. Industries, Inc., or acceptable equal.

H. Collars: constructed of reinforced concrete as indicated on the drawings.

2.04 CONFIGURATION

A. Manholes shall be constructed as indicated on the Standard Manhole Detail drawing.

B. Shaft Construction: Concentric with eccentric cone top section; lipped male/female joints; sleeved to receive pipe sections.

C. Shape: Cylindrical, unless indicated otherwise.

D. Clear Inside Dimensions: 48 inch, 60 inch or 72 inch diameter, as indicated.

E. Design Depth: As indicated.

F. Clear Lid Opening: 30 inch diameter, as indicated.

G. Pipe Entry: Provide openings for all pipes entering manhole, as indicated.

H. Steps: 12 inches on center vertically, set into manhole wall directly under opening.

PART 3 EXECUTION

3.01 EXAMINATION

A. Verify items provided by other sections of Work are properly sized and located.

B. Verify that built-in items are in proper location, and ready for roughing into Work.

C. Verify excavation for manholes is correct.

3.02 PREPARATION

A. Where native material encountered at foundation depth of manhole is considered unsuitable, remove unsuitable material; and place and compact bedding material, to limits directed by the City Engineer or City Inspector.

3.03 MANHOLES

A. Install precast concrete manhole base level on a compacted foundation, according to manufacturer's instructions.

B. Construct cast-in-place manhole base over existing sewer lines, as acceptable to the City Engineer. Manhole base shall be constructed as indicated on the drawing.

1. After new manhole has been completed, saw-cut into top of existing sewer pipe, remove section of pipe as required, and dispose of the removed material; construct watertight grout invert channels through new manhole, between new pipe and existing pipe line, as directed. Invert channel shall be formed to direct sewage flows through the manhole as indicated.

2. Divert existing sewage flows around work area to allow connection to existing pipe line to be made.

C. Forces main discharge manholes shall be epoxy lined or equal as approved by City Engineer

1. Manhole shall be prepared and liner installed as per manufacture recommendation.

2. Additional manholes immediately downstream of the discharge manhole may also need to be epoxy lined as determined by the City Engineer.

D. Place manhole riser sections plumb and level, from the manhole base to the top section, as indicated and according to manufacturer's instructions; anchor to base; align steps perpendicular to sewer line, and seal joints.

E. Place top section, cone section or flat slab, on top riser section, with opening positioned over steps. Top of cone section or flat slab shall be from 10-inches to 18-inches below final surface elevation, as directed by the City Engineer or City Inspector.

F. Install grade rings, as required, to adjust top of lid and frame to match finish elevation.

G. When coring a manhole a minimum of 6” shall be left between outer edge of core and top and bottom of manhole section.

H. Connect pipe to manhole with appropriate type flexible coupling as recommended by manufacturer. Provide pipe joint or flexible coupling on all pipes approximately 18-inches from outside of manhole. Grout around pipe after installation is complete. Make connections watertight.

I. Grout inside of manhole base sections to form channel between connected pipes, as indicated. Trowel smooth. Top of channel shall be a same elevation as top of outlet pipe.

J. Set cast iron frames and covers level without tipping, to correct elevations. After placement, grout around the exterior of frame from top of concrete top section to top of frame, as indicated, to ensure watertight condition. No wood or other unacceptable material shall be used to place frames in final position; only solid materials shall be used as directed by the City Inspector.

K. After manhole base has been completed, furnish and install temporary pipe plugs to seal all interior pipe openings; plugs to be Brent DuoSeal Pipe Plug by Burke Rubber Company, Cherne Pipe Plug by Cherne Manufacturing Company, or acceptable equal. Pipe plugs shall remain in place until final review and acceptance of completed sewer . Plugs shall then be removed; and shall be property of Contractor.

L. In paved areas, collars shall be constructed around covers as indicated. Collars shall be constructed after new pavement has been placed and accepted by the City Engineer or City Inspector.

M. Coordinate with other sections of work to provide correct size, shape, and location.

N. Construct 12’ access road to all manholes; access roads are to meet all city road standards as per section 00500 (Tables 1, 2, and 3)

3.04 FIELD QUALITY CONTROL

A. Manholes shall be tested using vacuum test method to demonstrate integrity of installed materials and construction procedures. Method and material for repair shall be as acceptable to the City Engineer or City Inspector.

1. Each manhole shall be tested immediately after assembly and backfilling.

2. Plug all lift holes with an acceptable non-shrink grout.

3. Plug all pipes entering manhole; securely brace plugs during test.

4. Test head shall be placed at inside top of cast iron frame, or as accepted by the City Engineer or City Inspector; and the seal shall be inflated in accordance with manufacturer's recommendations.

B. Testing shall conform to ASTM C 1244, Standard Test Method for Concrete Sewer Manholes by the Negative Air Pressure (Vacuum) Test.

C. If manhole fails initial test, make necessary repairs with non-shrink grout or chemical injection as directed by City Inspector. Manhole shall be re-tested until satisfactory test is obtained.

END OF SECTION

SECTION 02350

STORM WATER TREATMENT SYSTEM

PART 1 GENERAL

1.01 SECTION INCLUDES

A. Storm water treatment systems.

B. Reinforced concrete structures.

1.02 RELATED SECTIONS

A. Section 02115 - Structural Excavation: Excavating for structures and appurtenant items.

B. Section 02116 - Fill and Backfill: Bedding, backfilling and compacting.

C. Section 02335 - Storm Water System.

D. Section 03300 - Cast-in-Place Concrete: Concrete for structures and appurtenant items.

1.03 SUBMITTALS

A. See Section 01300 - Administrative Requirements, for submittal procedures.

B. Product Data: Provide product data on storm water treatment system and appurtenant items including removal curves and washout testing that validate the unit selection

C. Shop Drawings:

1. Provide dimensional shop drawings; prepared at a scale of not less than 3/16-inches per foot (1:75).

2. Shop drawings shall be annotated to indicate all materials to be used and all applicable standards for materials, required tests of materials, and design assumptions for structural analysis.

3. Submit hard or electronic copies of equipment shop drawings to the Engineer for review and approval.

D. Manufacturer’s Certificate: Certify that products meet or exceed specified requirements.

E. Project Record Documents: Record actual locations structures and appurtenant items. Identify and describe unexpected variations to subsoil conditions or discovery of uncharted utilities.

1.04 QUALITY CONTROL INSPECTION

A. The quality of materials, the process of manufacture, and the finished sections shall be subject to inspection by the City Engineer. Such inspection may be made at the place of manufacture, or on the work site after delivery, or at both places.

1. The sections shall be subject to rejection at any time if material conditions fail to meet any of the specification requirements, even though sample sections may have been accepted as satisfactory at the place of manufacture.

2. Sections rejected after delivery to the site shall be marked for identification and shall be removed from the site at once.

3. All sections which have been damaged beyond repair during delivery will be rejected and, if already installed, shall be repaired to the Engineer's acceptance level, if permitted, or removed and replaced, entirely at the Contractor's expense.

B. All sections shall be inspected for general appearance, dimensions, soundness, and related items. The surface shall be dense, close textured and free of blisters, cracks, roughness and exposure of reinforcement.

C. Imperfections may be repaired, subject to the acceptance of the Engineer, after demonstration by the manufacturer that strong and permanent repairs result.

1. Repairs shall be carefully inspected before final acceptance.

2. Cement mortar used for repairs shall have a minimum compressive strength of 4,000 psi at the end of 7 days and 5,000 psi at the end of 28 days when tested in 3 inch diameter by 6 inch long cylinders stored in the standard manner.

3. Epoxy mortar may be utilized for repairs.

PART 2 PRODUCTS

2.01 STORMWATER HYDRODYNAMIC VORTEX TREATMENT STRUCTURE (HVS)

1. Construct the reinforced concrete structure for the treatment system as indicated on the drawings and as directed by the Engineer.

2. Structure dimensions, wall thicknesses, and slab thicknesses shall be as indicated on the dimensional drawings and as directed by the Engineer.

3. Concrete for structure shall conform to Section 03300; and shall meet the following additional requirements:
   a. All concrete shall be cured by an approved method. Concrete sections shall not be stripped until the concrete has attained a compressive strength of 4,000 psi or 5 days after fabrication and/or repair, whichever is the longer.
   b. Joints shall be as shown on the drawings with a butyl mastic sealant conforming to ASTM C 990.

4. Pipe openings shall be sized to accept pipes of the specified size(s) and material(s), and shall be sealed with a hydraulic cement conforming to ASTM C 595M or Link-Seal.

5. Internal aluminum plate components shall be aluminum alloy 5052-H32 in accordance with ASTM B 209.

6. Brick or masonry used to build the manhole frame to grade shall conform to ASTM C 32 or ASTM C 139 and shall be installed in conformance with Section 02340 and all City requirements.

7. Manhole frames and covers shall be in accordance with Section 02340; with the words "Storm Water Treatment System" cast in covers.

8. A bitumen sealant in conformance with ASTM C 990 shall be utilized in affixing the aluminum swirl chamber to the concrete vault.

9. The cast iron manhole frames and covers shall be sized as per the manufacturer's drawings and shall be in accordance with ASTM A48, CL.35B and AASHTO M105. The masonry fixing bolts shall be Type 304 stainless steel.

B. Treatment System Components and Design.

1. Storm water treatment system shall include a tangential inlet to induce a swirling flow pattern that will accumulate and store settable solids in a manner and a location that will prevent re-suspension of previously captured particulates. Swirl chamber diameter shall be sized for the anticipated storm water

flows.

2. Storm water treatment system shall be of a hydraulic design that includes flow controls designed and certified by a professional engineer, using accepted principles of fluid mechanics, that raise the water surface inside the tank to a pre-determined level in order to prevent the re-entrainment of trapped floating contaminants.

3. Storm water treatment system shall have a design treatment capacity sized for the anticipated storm water flows; and shall not re-suspend trapped sediments or re-entrain floating contaminants at flow rates up to and including the design treatment capacity.

5. Storm water treatment system shall have usable sediment storage capacity of volume designed by the manufacturer for the anticipated storm water flows.

6. The system shall be designed such that the pump-out volume is less than one-half of the total system volume.

7. The system shall be designed to not allow surcharge of the upstream piping network during dry weather Conditions and shall have a sediment sum that is protected from high flows during peak flow events.

8. A water-lock feature shall be incorporated into the design of the storm water treatment system to prevent the introduction of trapped oil and floatable contaminants to the downstream piping during routine maintenance and to ensure that no oil escapes the system during the ensuing rain events.

9. Direct access shall be provided to the sediment and floatable contaminant storage chambers to facilitate maintenance. There shall be no appurtenances or restrictions within these chambers.

10. The manufacturer shall certify that storm water treatment system conforms to the performance requirements described herein for the anticipated storm water flows.

C. Manufacturer.

1. Storm water treatment systems shall be of a type that has been installed and used successfully for a minimum of 5 years. The manufacturer of said systems shall have been regularly engaged in the engineering design and production of systems for physical treatment of storm water runoff during the aforementioned period.

2.02 SEPARATION TYPE STORM WATER TREATMENT SYSTEMS

A. Reinforced Concrete Structures.

1. Construct the reinforced concrete manholes for the treatment system as indicated on the drawings and as directed by the Engineer.

2. Manholes shall be sized by the manufacturer to conform with the performance requirements described herein and as accepted by the City Engineer.

3. Manholes shall be constructed as described in Section 02340.

4. Pipe openings shall be sized to accept pipes of the specified size(s) and material(s), and shall be sealed with a hydraulic cement conforming to ASTM C 595M or Link-Seal.

5. Manhole frames and covers shall be in accordance with Section 02340; with the words” Storm Water Treatment System" cast in covers.

B. Treatment System Components and Design.

1. The storm water treatment system shall include a primary manhole, separator unit, storage manhole,

pipes, fittings, and appurtenant items.

2. The primary manhole will accumulate and store coarse settleable solids; and the storage manhole will accumulate and store fine settable solids, oils and floatable contaminates. Manholes shall be designed to prevent re-suspension of previously captured particulates; and shall be sized for the anticipated storm water flows.

3. The separation unit and piping shall be designed and certified by a professional engineer, to totally treat the anticipated storm water flows; as acceptable to the City Engineer. No overflow of the system will be allowed.

C. Manufacturer.

1. Storm water treatment systems shall be of a type that has been installed and used successfully for a minimum of 2 years. The manufacturer of said systems shall have been regularly engaged in the engineering design and production of systems for physical treatment of storm water runoff during the aforementioned period.

2.03 STORM WATER TREATMENT SYSTEM PERFORMANCE

A. Performance. Storm water treatment systems shall adhere to the following performance specifications at the anticipated design treatment capacities.

1. Treatment standard: 80% TSS based on a particle size with a max 110 µm average (D_{50}) particle size at the water quality flow rate
2. Detained Water Quality Flow Rate: 100-yr peak flow through the orifice during a 24 hr storm
3. Undetailed Water Quality Flow Rate: 5 year peak flow through the system during a 24 hr storm
4. Peak Flow (pass through) rate: 100-yr peak flow through the system during a 24 hr. Storm

B. The design engineer shall determine the following performance requirements:

1. Total treatment capacity.

2. Sediment storage capacity.

C. The design engineer shall submit calculations used to determine anticipated storm water flows.

D. The manufacturer shall design and size the treatment system to treat the total storm water flow through the treatment system to the following requirements:

1. Treatment system shall be capable of removing 80% of the net annual Total Suspended Solids (TSS) load based on a 110-micron particle size.
   a. Annual TSS removal efficiency models shall be based on documented removal efficiency performance from full scale laboratory tests.
   b. Annual TSS removal efficiency models shall only be considered valid if they are corroborated by independent third party field testing. Said field testing shall include influent and effluent composite samples from a minimum of ten storms at one location.

PART 3 EXECUTION

3.01 EXAMINATION

A. Verify that the storm drain pipe line sizes, locations, and invert elevations are as indicated on the drawings.

3.02 PREPARATION

A. Prepare ends of storm drain pipe for connections to treatment system structures, as indicated and as directed.

3.03 EXCAVATION

A. See Sections 02115 and 02116 for additional requirements.

B. Excavate to the limits as described in Section 02116 and as directed by the Engineer.

C. After the concrete structures have been completed and accepted by the Engineer, backfill around and over the structure, tamp in place and compact. See Section 02116 for requirements.

3.04 CONSTRUCTION - CONCRETE STRUCTURE

A. Furnish all labor, materials, equipment and appurtenant items required to construct the reinforced concrete structure for the storm water treatment system, in accordance with the drawings and the specifications.

B. Furnish, place and compact granular base of the thickness indicated; conforming to Section 02116.

C. Construct the reinforced cast-in-place concrete structure as indicated on the drawings and as directed by the Engineer.

1. Precast concrete vaults may be used as acceptable to the Engineer.
   a. Concrete shall conform to the requirements of Section 03300.
   b. Precast concrete vaults shall be designed for HS20-44 loading as determined by a Licensed Professional Engineer.
   c. Precast sections shall have tongue and groove joints with a butyl mastic sealant conforming to ASTM C990
   d. Vaults shall conform to the dimensions indicated for the cast-in-place vault, and to the appropriate required described herein.
   e. Precast sections shall be set in a manner that will result in a watertight joint. In all instances, installation of Stormwater Treatment Systems shall conform to ASTM specification C 891 "Standard Practice for Installation of Underground Precast Utility Structures".
   f. Holes made in the concrete sections for handling or other purposes shall be plugged with a non-shrink grout or by using grout in combination with concrete plugs.
   g. Where holes must be cut in the precast sections to accommodate pipes, do all cutting before setting the sections in place to prevent any subsequent jarring which may loosen the mortar joints. The Contractor shall make all pipe connections; connections shall be watertight.

D. The treatment system shall be installed inside of the vault before the top slab for the vault is constructed or installed.

E. Outlet weirs shall be constructed where and as required and as directed by manufacturer.

F. After constructing the roof section of the vault, set precast concrete manhole riser sections, to the height required to bring the cast iron manhole covers to grade, so that the sections are vertical and in true alignment with a 1/4-inch maximum tolerance allowed.

G. Backfill around vault in a careful manner, bringing the fill up in 6-inch lifts on all sides.

H. If leaks appear, clean the inside joints and caulk with lead wool to the satisfaction of the Engineer.

J. Construct 12’ wide minimum access road to storm water treatment manhole as acceptable to the City Engineer.

3.05 CONSTRUCTION - CONCRETE MANHOLES

A. Furnish all labor, materials, equipment and appurtenant items required to construct reinforced concrete manholes for the separation type storm water treatment system, in accordance with the drawings and the specifications.

B. Furnish, place and compact granular base of the thickness indicated; conforming to Section 02316.

C. Construct the reinforced concrete manholes as indicated on the drawings and as directed by the Engineer; conforming to Section 02640..

3.06 INSTALLATION - TREATMENT SYSTEMS

A HVS Treatment System.

1. Furnish all labor, materials, equipment and appurtenant items required and install storm water treatment systems and appurtenances in accordance with the Drawings and these specifications, and according to manufacturer's written instructions and recommendation.

2. After constructing the base and wall sections, prepare to install the swirl chamber.
   a. Place the 3/4-inch thick by 3/4-inch wide butyl mastic seal vertically on the outside of the swirl chamber starting one inch above the bottom of the swirl chamber and continuing to a height equal to the elevation of the bottom of the upper aperture of the swirl chamber.
   b. The butyl mastic seal should abut the downstream side of the pre-drilled mounting holes that attach the swirl chamber to the long walls of the concrete vault.
   c. Next, install the extruded EPDM seal on the bottom edge of the 180 degree downstream section of the swirl chamber by first applying a bead of Sikaflex-1a polyurethane elastomeric sealant into the extruded slot, then slide the seal onto the swirl chamber. The extruded seal should extend 3-inches upstream of the mounting holes, toward the inlet end of the vault.
   d. Set the swirl chamber into position and keep the seal approximately 1/2-inch above the floor of the concrete vault. Apply a continuous bead of Sikaflex-1 a sealant under the cupped bottom of the seal.
   e. Set and anchor the circular swirl chamber by bolting the swirl chamber to the side walls of the concrete vault at the three (3) tangent points and at the inlet tab using HIL TI brand stainless steel drop-in wedge anchors, or equivalent, 3/8-inch diameter by 2-3/4 inch minimum length at heights of approximately three (3) inches off the floor and at fifteen (15) inch intervals to approximately the same height of the butyl mastic sealant (at locations of pre-drilled holes in aluminum components). Apply a continuous bead of Sikaflex-1 a sealant to the intersection of the inside bottom edge of the extruded seal and the vault floor.

3. Prior to constructing the roof section, bitumen sealant equal to ASTM C 990 shall be placed along the top of the baffle wall, using more than one layer of mastic if necessary, to a thickness at least 1-inch greater than the nominal gap between the top of the baffle and the roof section.
   a. The nominal gap shall be determined either by field measurement or the shop drawings.
   b. After construction of the roof section has compressed the butyl mastic sealant in the gap, finish sealing the gap with an approved non-shrink grout on both sides of the gap using the butyl mastic as a backing material to which to apply the grout.
   c. Also apply non-shrink grout or Sikaflex-1a to the joints at the side edges of the baffle walls.

B. Separation Type Treatment System.

1. Furnish all labor, materials, equipment and appurtenant items required and install storm water treatment systems and appurtenances in accordance with the Drawings and these specifications, and according to manufacturer's written instructions and recommendation.

2. Manholes shall be constructed as described herein, and according to the requirements of the treatment system manufacturer.

3. The separator unit, pipe and fittings, and appurtenant items, shall be installed according to the shop drawings and as recommended by the manufacturer.

3.07 FIELD QUALITY CONTROL

A. Perform field inspection and testing in accordance with Section 01400.

B. If tests indicate that the Work does not meet specified requirements, remove the Work and replace or repair the Work as required; and retest at no cost to the City Engineer.

3.08 PROTECTION

A. Protect the treatment systems from damage or displacement until backfilling operations have been completed.

END OF SECTION

SECTION 02355

STORM WATER DETENTION PONDS

PART 1 GENERAL

1.01 SECTION INCLUDES

A. Storm water detention ponds.

B. Pond pipe lines, structures, and appurtenant items.

1.02 RELATED SECTIONS

A. Section 02100 - General Excavation: General excavating, embankments and compacting.

B. Section 02112 - Trenching for Pipe Work: Excavating, bedding, backfilling and compacting.

C. Section 02115 - Excavation: Excavating for structures and appurtenant items.

D. Section 02116 - Fill and Backfill: Bedding, backfilling and embankment material.

E. Section 02335 - Storm Drain System.

F. Section 02724 - Automatic Sprinkling System.

G. Section 02726 - Landscaping.

H. Section 03300 - Cast-in-Place Concrete: Concrete for structures.

1.03 REFERENCES

A. See Section 02335 for storm water system materials.

1.04 SUBMITTALS

A. See Section 01300 - Administrative Requirements, for submittal procedures.

B. Product Data: Provide data on pipe materials, pipe fittings, valves, accessories and soil and embankment material.

C. Manufacturer's Certificate: Certify that products meet or exceed specified requirements.

D. Project Record Documents: Record actual locations of pipe lines, valves, connections, and invert elevations. Identify and describe unexpected variations to subsoil conditions or discovery of uncharted utilities.

E. Storm water detention ponds, structures and all appurtenant items shall be sized and designed by the developer’s engineer. Ponds shall be designed and constructed according to the City’s standards. The plan drawings shall be submitted to the City Engineer for review; along with all calculations required to show how the various components were sized and how they are intended to operate. No work shall be done until the plan drawings have been accepted by the City Engineer.

F. Geotechnical report and recommendations.

1.05 QUALITY ASSURANCE

A. Perform Work in accordance with City's requirements as described herein.

1.06 DELIVERY, STORAGE, AND HANDLING

A. Deliver and store materials as recommended by the manufacturers.

PART 2 PRODUCTS

2.01 EMBANKMENT AND BACKFILL MATERIALS

A. Embankment and Backfill Materials: As specified in Sections 02112, 02115 and 02116.

2.02 PIPE LINES AND STRUCTURES

A. Pipe lines and structures shall be constructed as specified in Section 02335, and as directed by the City Engineer.

PART 3 EXECUTION

3.01 EXAMINATION

A. Verify that location and elevations are as indicated.

3.02 PREPARATION

A. Clear and grub the pond site, as required; and dispose of cleared material in an acceptable manner.

B. Remove top soil material as described in Section 02100.

3.03 POND CONSTRUCTION

A. See Section 02112 and Sections 02115 and 02116 for additional requirements.

B. See Section 02335 for installation of pipe lines.

1. Construct pipe lines through bottom of detention ponds, as indicated on approved construction drawings and as directed by the City Engineer, to convey low flows of storm water through the ponds.

C. Excavate for ponds and structures to the limits indicated on the drawings and as directed by the City Engineer or City Inspector; conforming to the requirements of Section 02100.

1. Furnish, place and compact gravel base, as indicated on the drawings, for structures.

2. Furnish, place and compact pipe bedding and backfill material for pipe trenches.

D. Compact sub-base as described in Section 02115.

E. Construct embankments as indicated on the drawings and as described in Section 02100.

1. Embankments shall have maximum slopes of 3 horizontal to 1 vertical.

2. Construct 12-foot wide (minimum) access road around perimeter of pond and embankments as well as to the bottom of pond where needed for access to outlet structure. Access road shall be capable of supporting trucks and other heavy vehicles. Access road is to meet all city road standards; see section 00500 (Tables 1, 2, and 3).

3. Embankment shall provide a minimum of 1’ of freeboard.

F. Construct pond structures as indicated on the approved construction drawings and as directed by the City Engineer.

1. Bubble-up type inlet boxes shall be constructed in the pond to discharge high flows of storm water into the pond; and to allow water to drain from the pond at controlled rates, as required. Boxes shall be as indicated on the construction drawings; and shall be constructed with floor of boxes at least 6-inchers below pipe inverts.

2. Construct an overflow box or spillway in the pond as per the approved construction drawings. Overflow box shall have a trash grate of approved design; and spillway shall convey overflows to the public row or to an acceptable location as approved by the City Engineer.

G. Construct automatic sprinkling system for pond area, as indicated on approved construction drawings and as directed by the City Engineer; conforming to Section 02724.

H. Landscape the pond area, as indicated on approved construction drawings and as directed by the City Engineer; conforming to Section 02726.

3.04 FIELD QUALITY CONTROL

A. Perform field inspection and testing in accordance with Section 01400.

B. If tests indicate Work does not meet specified requirements, remove Work, replace and retest at no cost to City.

END OF SECTION

SECTION 02410

WATER DISTRIBUTION SYSTEM

PART 1 GENERAL

1.01 SECTION INCLUDES

A. Pipe and fittings for project water lines, to include domestic water lines, fire water lines, and culinary water lines.

B. Valves, Fire hydrants, and appurtenant items.

1.02 RELATED SECTIONS

A. Section 02112 - Trenching for Pipe Work: Excavating, bedding, backfilling and compacting.

B. Section 02115 - Excavation: Excavating for structures and appurtenant items.

C. Section 02116 - Fill and Backfill: Bedding and backfilling.

D. Section 02415 - Disinfection of Water Distribution Systems: Disinfection of site service utility water piping.

E. Section 03300 - Cast-in-Place Concrete: Concrete for thrust restraints.

1.03 REFERENCES

A. ASME B16.18 - Cast Copper Alloy Solder Joint Pressure Fittings; The American Society of Mechanical Engineers.

B. ASME B16.22 - Wrought Copper and Copper Alloy Solder-Joint Pressure Fittings; The American Society of Mechanical Engineers.

C. ASTM B 88 - Standard Specification for Seamless Copper Water Tube.

D. ASTM D 3139 - Standard Specification for Joints for Plastic Pressure Pipes using Flexible Elastomeric Seals.

E. AWS A5.8 - Specification for Filler Metals for Brazing and Braze Welding; American Welding Society.

F. AWWA C104/A21.4 - Cement-Mortar Lining for Ductile-Iron Pipe and Fittings for Water; American Water Works Association (ANSI/AWWA C104/A21.4).

G. AWWA C105/A21.5 - Polyethylene Encasement for Ductile-Iron Pipe Systems; American Water Works Association (ANSI/AWWA C105/A21.5).

H. AWWA C111/A21.11 - Rubber-Gasket Joints for Ductile-Iron Pressure Pipe and Fittings; American Water Works Association (ANSI/AWWA C111/A21.11).

I. AWWA C151/A21.51 - Ductile-Iron Pipe, Centrifugally Cast, for Water; American Water Works Association; (ANSI/AWWA C151/A21.51).

J. AWWA C500 - Metal-Seated Gate Valves for Water Supply Service; American Water Works Association.

K. AWWA C502 - Dry Barrel Fire Hydrants; American Water Works Association (ANSI/AWWA C502/C502a).

L. AWWA C504 - Rubber Seated Butterfly Valves; American Water Works Association.

M. AWWA C508 - Swing-Check Valves for Waterworks Service, 2 In. (50 mm) Through 24 In. (600 mm) NPS; American Water Works Association; (ANSI/AWWA C508/C508a).

N. AWWA C509 - Resilient-Seated Gate Valves for Water Supply Service; American Water Works Association; (ANSI/AWWA C509/C509a).

O. AWWA C515 - Reduced-Wall, Resilient-Seated Gate Valves for Water Supply Service; American Water Works Association; (ANSI/AWWA C515).

P. AWWA C600 - Installation of Ductile-Iron Water Mains and Their Appurtenances; American Water Works Association; (ANSI/AWWA C600).

Q. ASTM D2774 - Standard Recommended Practice for Underground Installation of Thermoplastic Pressure Piping.

R. AWWA C900 - Polyvinyl Chloride (PVC) Pressure Pipe, 4 In. Through 12 In., for Water Distribution; American Water Works Association; (ANSI/AWWA C900/C900a).

S. AWWA C200 - Steel Water Pipe casings, 6-inches and larger as needed.

T. Use the latest issue of the above reference standards as of the date of the Project.

1.04 SUBMITTALS

A. See Section 01300 - Administrative Requirements, for submittal procedures.

B. Product Data: Provide data on pipe materials, pipe fittings, valves and accessories.

C. Manufacturer's Certificate: Certify that products meet or exceed specified requirements.

D. Project Record Documents: Record actual locations of all improvement including, pipe lines, valves, connections, thrust restraints, services and invert elevations. Identify and describe unexpected variations to subsoil conditions or discovery of uncharted utilities.

1.05 QUALITY ASSURANCE

A. Perform Work in accordance with Owner's requirements as described herein.

1.06 DELIVERY, STORAGE, AND HANDLING

A. Deliver and store valves in shipping containers with labeling in place.

PART 2 PRODUCTS

2.01 WATER PIPE

A. Ductile Iron Pipe: AWWA C151:

1. Fittings: Ductile iron, standard thickness.

2. Joints:
   a. Push-On Joints: AWWA C111, push-on type with rubber gasket.
   b. Mechanical Joints: AWWA C111, mechanical joint type with gasket, bolts, and nuts.
   c. Flange Joints: AWWA C110, flange type with gasket, bolts, and nuts.

3. Jackets: AWWA C105 polyethylene jacket.

B. Copper Tubing: ASTM B 88, Type K, annealed: Not allowed in right-of-ways.

1. Fittings: ASME B16.18, cast copper, or ASME B16.22, wrought copper.

2. Joints: Compression connection or AWS A5.8, BCuP silver braze.

C. PVC Pipe: AWWA C900 DR-14, as indicated:

1. Fittings: AWWA C111, cast iron.

2. Joints: ASTM D 3139 compression gasket ring.

D. Polyethylene Pipe: ASTM D2737, C.T.S., 200 psi, SDR 9.

1. Joints: Mueller compression type couplings.

E. Trace Wire: #14 gauge to be installed on all buried pipe. Provide continuity test to ensure proper installation.

F. Detector Tape: Blue plastic tape imprinted with “CULINARY WATER” in large letters, to be installed on all buried pipes.

2.02 CASING PIPE MATERIALS

A. Welded Steel Pipe: AWWA C 200, steel water pipe; diameter as indicated.

B. Casing Insulators: fusion coated steel casing insulators with 12-inch wide band and 2-inch wide glass reinforced plastic runners; Model C12G-2, manufactured by Pipeline Seal and Insulator, Inc. or acceptable equal.

C. Casing End Seals: flexible S-shaped seals fabricated on synthetic rubber with stainless steel bands and clamps; Model S Pull-On End Seals, manufactured by Pipeline Seal and Insulator, Inc., or acceptable equal.

2.03 VALVES

A. Valves: Manufacturer's name and pressure rating marked on valve body.

B. Gate Valves Up To 3 Inches:

1. Brass or Bronze body, non-rising stem, inside screw, single wedge or disc, IPS ends, and handwheel.

2. Product: Powell U.S. Bronze Gate Valves, or accepted equal.

3. Substitutions: See Section 01600 - Product Requirements.

C. Gate Valves 3 Inches and Over:

1. AWWA C500, iron body, bronze trim, non-rising stem with square nut, single wedge, mechanical joint or flanged ends as indicated, and cast iron valve box.

2. AWWA C509, iron body, bronze trim, non-rising stem with square nut, single wedge, resilient seat, mechanical joint or flanged ends as indicated, and cast iron valve box.

3. AWWA C515, ductile iron, bronze trim, non-rising stem with square operating nut, single ductile iron wedge, mechanical joint or flanged ends as indicated, and cast iron valve box.

4. Product: Mueller Resilient Wedge Gate Valves , or acceptable equal; with appropriate type Pacific States Cast Iron Valve Box, or accepted equal.

D. Butterfly Valves from 2 Inches to 24 Inches:

1. AWWA C504, iron body, bronze disc, resilient replacement seat, mechanical joint or flanged ends as indicated, manual worm gear operator, and cast iron valve box where required.

2. Underground manual operators shall be totally enclosed, factory grease packed and sealed, bronze worm gear operators with self-locking gearing; stops shall be provided to prevent over travel of valve disc.

3. Valve operator shall be geared to close valves slowly. Number of turns to close valve from full open position shall be: 32 turns for 10-inch and smaller valves, 52 turns for 12-inch thru 16-inch valves, and 76 turns for 18-inch thru 24-inch valves. Closing times for larger valves shall be accepted by the Engineer.

4. Product: Mueller "Lineseal III" Butterfly Valve with appropriate type Pacific States Cast Iron Valve Box, or accepted equal.

E. Corporation Stops: shall be type for connecting to copper or polyethylene pipe; Mueller No. H- 15000, or acceptable equal, for up to 2-inch service line.

F. Blow-Off Hydrants: shall be Non-Freeze Blow-Off Assembly.

2.04 HYDRANTS

A. Hydrants: AWWA C502, UL 246, dry barrel type.

1. Inside dimension: 7 inches minimum, with minimum 5 inches diameter valve seat opening.

2. Minimum net water area of barrel not less than 190 percent of valve opening.

3. 6 inch flanged inlet connection with accessories, gland bolts, and gaskets.

4. Product: Mueller "Super Centurion 250" or Waterous “Pacer WB 67-250” Fire Hydrants or equal.

B. Hydrant Extensions: Fabricate with rod and coupling to increase barrel length, 1 extension maximum.

C. Hose and Streamer Connection: Two hose nozzles, 2 1/2-inch size, one pumper nozzle, 4 1/2 inch size.

D. Finish: Buried portion of hydrant shall be painted with two coats of CA50 coal tar enamel. Exposed portion shall be painted with Primer and two coats of enamel in acceptable red color.

2.05 BEDDING AND COVER MATERIALS

A. Bedding: As specified in Sections 02112 and 02116.

B. Backfill: As specified in Sections 02112 and 02116.

2.06 ACCESSORIES

A. Service Saddles: shall be bronze, double-strap type; Mueller No. H-16134, or acceptable equal, for up to 2-inch service lines. B. Concrete for concrete collars, slabs, and thrust restraints: Concrete type specified in Section 03300.

2.07 RESIDENTIAL WATER CONNECTIONS

A. Meter boxes, meter setters, meters, and appurtenant items shall be as indicated on the drawings and as directed by the City Engineer.

PART 3 EXECUTION

3.01 EXAMINATION

A. Verify that water main and main line tee size, location, and invert are as indicated.

B. Verify bedding material and installation.

C. Verify trails lines continuity.

D. Verify thrust block installation and sizing.

3.02 PREPARATION

A. Cut pipe ends square, ream pipe ends to full pipe diameter, remove burrs.

B. Remove scale and dirt on inside and outside before assembly.

C. Prepare pipe connections to equipment with flanges or mechanical joints.

3.03 TRENCHING

A. See Section 02112 and Sections 02115 and 02116 for additional requirements.

B. Hand trim excavation for accurate placement of pipe to elevations indicated.

C. Form and place concrete for pipe thrust restraints at each change of pipe direction. Place concrete to permit full access to pipe and pipe accessories. Provide required square footage of thrust restraint bearing on subsoil as indicated on the drawings.

D. Backfill around sides and to top of pipe with backfill material, tamp in place and compact, then complete backfilling.

3.04 INSTALLATION - PIPE

A. Maintain separation of water main from sewer piping in accordance with State code.

B. Establish elevations of buried piping to ensure not less than four feet of cover over pipe; or as indicated on the drawings and as directed by the City Engineer or Inspector.

C. Install pipe to indicated elevation to within tolerance of one inch.

D. Install ductile iron piping and fittings to AWWA C600.

E. Install PVC pressure pipe and fittings to ASTM D2774.

F. Install pipe lines to line and grade indicated.

G. Install pipe to allow for expansion and contraction without stressing pipe or joints.

H. Install access fittings to permit disinfection of water system performed under Section 02415.

I. Install #14 trace wire and detector tap above all pipe; coordinate with Section 02112.

3.05 INSTALLATION - CASING PIPES

A. See Sections 02315 and 02316 for structural excavation and fill and backfill; and for additional requirements.

B. Install casing pipes by ramming process where indicated; method to be acceptable to the City Engineer.

C. Install casing pipes at the line and grade as required to allow carrier pipes to be installed within the casing pipes at the design line and grade, as indicated on the drawings.

D. Place casing insulators on carrier pipes to properly center and position carrier pipe inside the casing pipes; space insulators as recommended by the pipe manufacturer.

E. Carrier Pipe inside of casing shall have restrain joints per City Engineer.

F. Seal each end of casing with appropriate size flexible end seals; install according to manufacturer's instructions and recommendations.

G. Seal bore holes at each end, around periphery of casing, with grout, impervious clay or brick masonry, as acceptable to the City Engineer or City Inspector.

H. Contractor shall be solely responsible for the accuracy, safety and adequacy of construction methods and procedures for installing casing pipes, and for any damage which may result from their failure. All operations of the Contractor for installation of casing pipes shall be subject to approval by the agency having jurisdiction over the item being crossed.

I. Contractor shall enter any agreement with, and furnish any and all indemnity and other bonds that may be required by, the agency listed above, for their protection against injury and interference with flow of water caused by the operations of the Contractor.

J. Contractor shall secure required permission from the agency listed above before commencing with the installation of casing pipes and related work along and across the respective areas.

3.06 INSTALLATION - VALVES AND HYDRANTS

A. Set valves on concrete block or other acceptable solid bearing.

B. Center and plumb valve box over valve operating nut. Set box cover flush with finished grade. Valve nut not to exceed 4’ in depth without valve nut extension.

C. Set hydrants plumb; locate pumper nozzle perpendicular to and facing roadway.

D. Set hydrants to grade, with bury mark at ground level and with nozzles at least 18 inches above ground level.

E. Locate hydrant control valve as indicated on the drawings and as directed by the Engineer.

F. Provide a drainage pit, 24 inches square by 12 inches deep, filled with 1/2-inch washed gravel. Encase elbow of hydrant in gravel to 6 inches above drain opening

3.07 SERVICE CONNECTIONS

A. Provide water service as indicated in detail with meter box and meter yoke with double check valve.

3.08 CONNECTIONS TO EXISTING WATER LINES

A. Connection to existing water lines shall be made where and as indicated on the drawings and as directed by the Engineer. The sizes of pipe, fittings, valves and appurtenant items required to make connection shall correspond to the sizes of existing pipe and of project pipe.

B. Excavate to existing pipe line at point of connection; determine actual conditions of existing pipe and all fittings and appurtenant items required to make the connection; and have all materials needed on site prior to

any shut down or cutting into existing pipe lines.

C. Connection which involve cutting into existing pipe lines include: cutting and removing sections of existing pipe and fittings as required; cleaning and preparing ends of existing pipe as required for connection; furnishing and installing all new pipe, fittings and valves required to make the connection of project pipe to the existing pipe as indicated; and all appurtenant work required to complete the connection.

D. Connection into existing pipe lines under pressure include: furnishing and installing mechanical joint tapping sleeve of the appropriate size on the existing pipe at point of connection; furnishing and installing tapping valve, with valve box, on sleeve; tapping existing pipe with acceptable type drilling machine and equipment, without interrupting flow in existing pipe line; and all appurtenant work required to complete the connection.

E. Connection to existing pipe line shall be made at such times and within the time limits and according to the directions as agreed to between the Contractor and the Owner.

F. Cut and plug existing pipe lines where indicated and as directed by the Engineer. Excavate as required to locate existing pipe lines to be abandoned in place; cut the existing pipe, as required; and install permanent plug in end of pipe to be abandoned.

G. Follow AWWA C651 guidelines for cutting existing pipes.

3.09 RECONNECT EXISTING WATER SERVICE LINES

A. Reconnect existing water service lines where and as indicated on the drawings and as directed by the Engineer. The sizes of pipe, fittings, saddles, corporation stops, and appurtenant items required to make reconnections shall correspond to the sizes of existing service lines and of project pipe.

B. Excavate as required to locate the existing service line; determine actual conditions of existing service line and all fitting and appurtenant items needed to make the reconnections; and have all materials needed on site prior to any shut down of existing service line.

C. After project pipe line has been thoroughly tested, disinfected and put into operation, dis-connect existing water service lines from the existing water line. Excavate as required to expose the existing service line; cut the existing service line and remove back to main as required and as directed; and remove the existing corporation stop from the existing pipe and install a permanent plug in the tap in the existing water line which is to be abandoned.

D. Tap the project pipe line with the appropriate size tapping machine and install a double strap service saddle, with corporation stop, on the project pipe. New copper tubing sized polyethylene (blue) pipe shall be furnished and installed to make the connection from the end of the existing service line to the new corporation stop. The new CTS sized poly pipe tubing shall be connected to the end of the existing service line with the appropriate type coupling and to the new corporation stop. In all reconnections, at least five feet of new tubing shall be installed, as indicated. Insulating couplings or adapters shall be used to connect pipe of dissimilar material.

E. After the existing water service line has been disconnected from the existing water line, the reconnection work shall be pursued diligently so that the service line is reconnected to the project water line and put back into service in the shortest possible time.

3.10 REMOVING EXISTING FIRE HYDRANTS

A. Existing fire hydrant installations shall be removed and delivered to the Owner as indicated and as directed by the Engineer.

B. Excavate as required to locate the existing hydrant supply line and control valve; determine actual conditions of existing supply line and all fitting required to complete the removal; and have all material needed at the job site prior to any shut down or cutting into existing pipe.

C. After project pipe line has been thoroughly tested, disinfected and put into operation, cut the existing hydrant

supply line and remove back to tee at main. Install a plug in the tee and secure with bolts as per manufacture recommendation. Remove the existing hydrant, control valve and valve box and deliver the material to the Owner as directed.

D. After the hydrant installation has been completely removed and the existing pipe plugged, backfill the excavation to match adjacent ground surfaces; and compact material as described herein.

3.11 WATER METER RELOCATION

A. Contractor shall notify the water customer and the City 48 hours in advance before starting the water service meter relocation. Contractor will be responsible for obtaining all necessary permits from the City. Contractor shall verify size and type of materials required for the water service meter relocation before commencing work. The Contractor shall also be responsible for relocation, reconnection, and replacement of any damaged materials.

1. After existing meter box is moved, the resultant void shall be backfilled, compacted, and the surface restored.

2. The meter box, ring, and lid shall be installed to one inch above final grade.

3. The relocated service shall be located so the meter box is centered in the park strip and the meter shall be rotated from perpendicular to parallel to the street.

4. The water service meter setter shall be installed in the horizontal and up-right position and with the top of the angle stop eighteen (18) to twenty two (22) inches below the finish grade. (See Standard Details wt-6).

5. Length of water service CTS poly pipe extension shall be the minimum length necessary to install the water service meter setter in its new location.

6. Contractor shall replace any water service meter that is damaged or misplaced as a result of the Contractor's operation.

7. Place a compression coupler over the section of CTS poly pipe at the location where the pipe was crimped.

8. Extend the trace wire and splice using a grease nut.

B. Water services may be upgraded to current City Construction Standards at the discretion of the City Engineer.

3.12 FIELD QUALITY CONTROL

A. Perform field inspection and testing in accordance with Section 01400.

B. Pressure test water piping to 200 PSI for 2 hours unless otherwise directed.

C. If tests indicate Work does not meet specified requirements, remove Work, replace and retest at no cost to Owner.

D. Disinfection and bacteria testing per section 02415.

END OF SECTION

SECTION 02412

PRESSURE REDUCING VALVE STATION

PART 1 GENERAL

1.01 SECTION INCLUDES

A. Pressure regulating valve (PRV) station; including reinforced concrete vault, pipe, fittings, valves, and appurtenant items.

1.02 RELATED SECTIONS

A. Section 02115 - Excavation: Excavating for structures and appurtenant items.

B. Section 02116 - Fill and Backfill: Bedding and backfilling.

C. Section 02410 - Water Distribution System: Pipe, fittings, valves and appurtenant items.

D. Section 02415 - Disinfection of Water Distribution Systems: Disinfection of station piping.

E. Section 03300 - Cast-in-Place Concrete: Concrete for concrete vault and thrust restraints.

1.03 REFERENCES

A. ASTM A 53 - Standard Specification for Pipe, Steel, Black and Hot-Dipped, Zinc-Coated, Welded and Seamless.

B. ASTM C 858 - Standard Specification for Underground Precast Concrete Utility Structures.

C. AWWA C504 - Rubber Seated Butterfly Valves; American Water Works Association.

D. AWWA C509 - Resilient-Seated Gate Valves for Water Supply Service; American Water Works Association; (ANSI/AWWA C509/C509a).

E. AWWA C515 - Reduced-Wall, Resilient-Seated Gate Valves for Water Supply Service; American Water Works Association; (ANSI/AWWA C151).

F. Use the latest issue of the above reference standards as of the date of the Project.

1.04 SUBMITTALS

A. See Section 01300 - Administrative Requirements, for submittal procedures.

B. Product Data: Provide data on pipe materials, pipe fittings, valves and accessories.

C. Manufacturer's Certificate: Certify that products meet or exceed specified requirements.

D. Project Record Documents: Record actual locations of pipe lines, valves, connections, thrust restraints, and invert elevations. Identify and describe unexpected variations to subsoil conditions or discovery of uncharted utilities.

1.05 QUALITY ASSURANCE

A. Perform Work in accordance with Owner's requirements as described herein.

1.06 DELIVERY, STORAGE, AND HANDLING

A. Deliver and store valves and appurtenant items in shipping containers with labeling in place.

PART 2 PRODUCTS

2.01 REINFORCED CONCRETE VAULT

A. Reinforced Concrete Vault. The reinforced concrete vault is shown on the drawings as constructed of poured-in-place concrete; but a precast reinforced concrete vault may be provided at the option of the Contractor.

1. The vault shall be sized to adequately accommodate all valves, pipe, fittings and appurtenant items to be enclosed in the vault; and the vault dimensions shall be acceptable to the City Engineer.

2. Poured-in-Place Concrete. A poured-in-place reinforced concrete vault, of the size indicated on the construction drawings, may be constructed; which shall conform to applicable requirements of Section 03300.

3. Precast Concrete. A precast reinforced concrete vault of equal dimensional and strength characteristics, as determined by the City Engineer during shop drawing review, may be provided. Precast vault shall have wall thickness of 9-inch minimum, bottom slab thickness of 6-inch minimum, and top slab thickness of 9-inch minimum; designed for H-20 highway loading.
   a. Precast vault shall conform to ASTM C 858; and shall be as manufactured by Amcor-White, Inc., Dura-Crete, or other manufacturers acceptable to the City Engineer.

4. Reinforcement. Reinforcing steel shall be as specified in Section 03300, using Grade 60 bar of the size(s) shown on the construction drawings.

5. Steps. Plastic encased steel steps shall be installed in station walls; spaced at 12-inches on center and centered under the access opening, as directed by the Engineer. Steps shall be copolymer poly-propylene-encased, 60,000 tensile strength steel, Model PSI-FF manhole steps, as manufactured by M. A. Industries, Inc., or other manufacturers accepted to the City Engineer.
   a. An aluminum ladder may be provided and permanently installed as acceptable to the City Engineer.

B. Access Doors: The access door leaf and channel frame, with strap anchors, shall be constructed of steel with hot-dip galvanized finish (ASTM 123); designed for H-20 highway loading. Doors shall be provided with 316 stainless steel hardware throughout; including all parts of the latch and lifting mechanism assemblies, hold open arms and guides, and all brackets, hinges, pins and fasteners. The doors shall have recessed hasp covered by a hinged lid flush with the surface of the door.
   a. The access doors shall be Type J Access Doors as manufactured by The Bilco Company, or companies acceptable to the City Engineer, of the size indicated on the drawings. The manufacturer shall guarantee the door against defects in material and workmanship for a period of five years.

C. Proprietary Items. Provide proprietary items of the type, size and manufacture noted on the drawings or as required to complete the work, or acceptable equals.

D. Miscellaneous Metal Work. Furnish and erect miscellaneous metal work as required to complete the pressure regulating station, as described herein and as shown on the drawings.

1. Codes. Specifications for the Design, Fabrication and Erection of Structural Steel For Buildings of the American Institute of Steel Construction shall govern the work. Welding shall be done in accordance with applicable American Welding Society Standards.

2. Substitutions. Substitutions of sections or modifications of details, or both, and the reasons therefor shall be submitted for acceptance by the City Engineer.

3. Responsibility for Errors. The Contractor shall be responsible for all errors of detailing, fabrication, erection, and correct fitting of the miscellaneous metal work.

4. Materials. Material shall conform to their respective specifications as follows:
   a. Bolts and Nuts: ASTM Standard A-307
   b. Gray Iron Castings: A-48 Class 40 or Better
   c. Structural Steel: ASTM Standard A-36
   d. Washers: ASTM Standard B-27.2, Type B
   e. Miscellaneous Items: Miscellaneous items shall be as indicated on the drawings or as required.

E. Painting. All exposed pipe, valves, fittings, and metal work inside of the station shall be painted with either: four coats of alkyd paint, Painting System II (Steel Structural Painting Council - Specification No. 2); or four coats of phenolic paint, Painting System III (Steel Structural Painting Council - Specification No. 3). Painting shall include surface preparation, pretreatment, primer coat, inter-mediate coats, and finish coat, as specified; with total dry film thickness not less than 4.0 mils. Aluminum surfaces which will be in contact with concrete after erection shall be coated with bituminous mastic coating, SSPC-Paint 12, prior to erection.

2.02 VALVE STATION PLUMBING

A. Pipe and Fittings.

1. Ductile Iron Pipe: AWWA C151: See Section 02410. Exposed pipe and fittings shall not be coated with coal tar pitch varnish; but shall be painted as specified herein.

2. Copper Tubing: ASTM B 88, Type K, annealed: See Section 02410.

3. Galvanized Steel Pipe: ASTM A 53: Galvanized steel pipe shall be Schedule 80, seamless or welded pipe, with threaded ends. Fittings shall be 150 lb. galvanized malleable iron banded type, with screwed ends. Unions shall be galvanized railroad type with ground brass-to-iron seats.

B. Valves.

1. Manufacturer's name and pressure rating marked on valve body.

2. Gate Valves Up To 3 Inches:
   a. Brass or Bronze body, non-rising stem, inside screw, single wedge or disc, IPS ends, and handwheel.
   b. Product: Powell U.S. Bronze Gate Valves, or accepted equal.
   c. Substitutions: See Section 01600 - Product Requirements.

3. Gate Valves 3 Inches and Over:
   a. AWWA C509, iron body, bronze trim, non-rising stem with square nut, single wedge, resilient seat, flanged ends as indicated, and cast iron valve box.
   b. AWWA C515, ductile iron, bronze trim, non-rising stem with square operating nut, single ductile iron wedge, mechanical joint or flanged ends as indicated, and cast iron valve box.
   c. Product: Mueller Gate Valves or Resilient Seat Gate Valves, or American Flow Control Series 2500 Resilient Seat Gate Valves; with appropriate type Pacific States Cast Iron Valve Box, or accepted equal.

4. Butterfly Valves From 2 Inches to 24 Inches:
   a. AWWA C504, iron body, bronze disc, resilient replacement seat, flanged ends as indicated, and manual worm gear operator.
   b. Valve operator shall be geared to close valves slowly. Number of turns to close valve from full open position shall be: 32 turns for 10-inch and smaller valves, 52 turns for 12-inch thru 16-inch valves, and 76 turns for 18-inch thru 24-inch valves. Closing times for larger valves shall be accepted by the Engineer.
   c. Product: Mueller "Lineseal III" Butterfly Valve with appropriate type manual worm gear operator.

5. Pressure Reducing Valves:
   a. Valves shall have cast iron or stainless steel bodies, with bronze pilot and trim; designed to reduce a higher inlet pressure to a steady lower pressure downstream, regardless of flow rate.
   b. Valves shall be hydraulically operated; capable of holding delivery pressure to within one or two psi of valve setting; and shall be adjustable, with downstream pressure range of 30 to 110 psi.
   c. Pressure reducing valves shall be Clayton Model 90G-01AB Pressure Reducing Valves, as manufactured by Cla-Val Company.
   d. Other type valves may be required for specific applications within the water system, as acceptable to the City Engineer.

6. Strainers:
   a. Strainers shall have cast iron bodies and covers, stainless steel strainer and stainless steel bolts.
   b. End flanges shall be ANSI class 125 standard flanges
   c. Stainless steel strainers shall have an area of two times the nominal inlet pipe opening.
   d. Strainers shall be designed for easy access and in-line servicing of strainer element; and shall have drain plugs for periodic flushing
   e. Strainer screens to be #4 mesh

7. Combination Air-Vacuum Release Valves.
   a. Valves shall be designed to release large quantities of air from pipes during filling, admit large quantities of air into pipes during draining, and release small accumulations of air during normal operation of pipes.
   b. Valves shall be equal in quality to "Heavy-Duty Combination Air Release Valves, No. 143C", as manufactured by Valve and Primer Corp. (APCO); and shall meet the provisions of these specifications.

8. Hose Gate Valves.
   a. Hose gate valves shall be high grade brass with handwheel, inside screw ends, rising stem, screwed bonnet, taper wedge double disc. Valve shall be designed to operate at 200 psi water pressure.
   b. Hose gate valves shall be equal to Powell U.S. Bronze Hose Gate Valve No. 527, or acceptable equal.

9. Pressure Relief Valves.

C. Miscellaneous Items.

1. Flanged Coupling Adapters. The flanged coupling adapters shall be Rockwell Type 912 or Type 913, or other couplings acceptable to the City Engineer, with anchor studs as recommended by the manufacturer; for connecting ductile iron pipe to flanged valves, equipment and fittings.

2. Mechanical Couplings. The mechanical couplings shall be Dresser, Rockwell, or other couplings acceptable to the City Engineer; for connecting the size and type of pipe shown on the drawings. Couplings exposed to soil shall be primed and coated with a 1/4-inch layer of coal tar or approved rust preventing wax compound.

3. Gauges. Gauges shall be as shown on the drawings and of the size and quality equal to or better than United States Gauge "A" Line, Figure No. 5000. Gauges shall have a range of 0 to 350 psi.

4. Gauge Cocks. Gauge cocks shall be of high grade bronze with tee head; designed for 200 psi water pressure, and factory-tested to 300 psi; Crane Nos. 708, 712, 744, or accepted equal.

5. Service Clamps: shall be bronze, double-strap type; Mueller No. H-16134, or acceptable equal, for up to 2 inch service lines.

6. Other Items. Other miscellaneous materials shall be as indicated on the drawings.

D. Hangers, Supports and Blocks.

1. Provide all hangers, supports, clamps, guides, sleeves, inserts, anchors and other such devices required for hanging or supporting pipe, preserving alignment, prevention of movement, passage of pipe through walls and floors, or securing pipe in any manner. The required number, location and detail of such items may or may not be indicated on the drawings; but, in any case, such work shall be provided as work incidental to furnishing and installing any type of pipe, fittings and appurtenances, and no extra payment will be made for this work.
   a. Piping shall be supported or suspended in such manner as to prevent sagging or over stressing of pipe, valves, fittings or connections; and so that no pipe, fittings, valves or other items transfer load or strain to equipment of any kind.

2. Supports.
   a. Concrete supports shall be installed under pipe and valves wherever shown on the drawings. Concrete supports shall be neatly constructed and finished, as indicated on the drawings and as directed by the Engineer. No supports shall be made until all pipe is in its final position.
   b. All other pipe supports shall be of the adjustable type of the style and size recommended by the manufacturer; and shall be located as indicated on the drawings and as directed by the Engineer. Floor flanges shall be of the size required to fit the pipe attached to the saddle support and as recommended by the manufacturer. Adjustable pipe supports shall be used as kick blocks for pipe in open locations.

3. Blocks. Concrete thrust blocks shall be used wherever shown on the drawings or where thrust is great enough, in the Engineer's opinion, to cause movement of the piping.

E. Miscellaneous. Miscellaneous appurtenant items shall be as indicated on the drawings or as required to complete the station.

2.03 BEDDING AND BACKFILL MATERIALS

A. Bedding: As specified in Sections 02115 and 02116.

B. Backfill: As specified in Sections 02115 and 02116.

2.04 ACCESSORIES

A. Concrete for Thrust Restraints: Concrete type specified in Section 03300.

PART 3 EXECUTION

3.01 EXAMINATION

A. Verify that water main size, location, and invert are as indicated.

3.02 PREPARATION

A. Cut pipe ends square, ream pipe ends to full pipe diameter, remove burrs.

B. Remove scale and dirt on inside and outside before assembly.

C. Prepare pipe connections to equipment with flanges or mechanical joints.

3.03 EXCAVATING

A. See Section 02112 and Sections 02115 and 02116 for additional requirements.

B. Hand trim excavation for accurate placement of pipe to elevations indicated.

C. Form and place concrete for pipe thrust restraints at each change of pipe direction. Place concrete to permit full access to pipe and pipe accessories. Provide required square foot of thrust restraint bearing on undisturbed subsoil as indicated on the drawings.

D. Backfill around sides and to top of pipe with backfill material, tamp in place and compact, then complete backfilling.

3.04 CONSTRUCTION - VALVE VAULT

A. Construct the vault for the pressure regulating station at the location indicated on the drawings and as directed by the City Engineer; in accordance with the details shown on the construction drawings and as specified herein.

B. Earthwork shall be done in accordance with applicable requirements of Section 02115.

1. Foundation Material. Where native material encountered at the foundation depth is considered unsuitable by the Engineer, the unsuitable material shall be removed and replaced by the appropriate borrow material.

2. Excess Material. Unsatisfactory and excess excavated materials shall be removed from the work site and legally disposed of.

C. Concrete Work. Comply with requirements of Section 03300, for placement, consolidation, finishing and protection of cast-in-place concrete.

D. Precast Concrete Vault. Precast concrete vault shall be installed level and plumb, in accordance with the manufacturer's written instructions and recommendations.

E. Access Door: Install according to manufacturer’s written instructions and recommendations.

F. Miscellaneous Metal Work.

1. Miscellaneous metal work shall be fabricated and assembled in the shop to the greatest extent possible.

2. Miscellaneous metal work shall be erected in conformity with AISC Code of Standard Practice.

3.05 INSTALLATION - PLUMBING

A. All pipe, fittings, valves, equipment and appurtenant items, together with supports and anchors, shall be installed as specified herein and as indicated on the drawings; in conformity with State plumbing codes.

B. Equipment shall be installed as shown on the drawings, and in accordance with accepted manufacturer's written instructions.

C. Strainers shall be installed upstream of all pressure regulating valves.

D. All material and workmanship shall conform to applicable requirements of the Utah Plumbing Code.

E. Establish elevations of buried piping to ensure not less than four feet of cover over pipe; or as indicated on the drawings and as directed by the City Engineer.

F. Install pipe to indicated elevation to within tolerance of one inches.

G. Install ductile iron piping and fittings to AWWA C600.

H. Install pipe to allow for expansion and contraction without stressing pipe or joints.

I. Install access fittings to permit disinfection of water system performed under Section 02515.

J. Set valves on concrete block or other acceptable solid bearing.

K. After plumbing system has been installed and completed, it shall be tested and disinfected as specified herein; including an operating test for acceptance of the work. Tests shall be performed in the presence of the City Engineer or his authorized representative.

3.06 FIELD QUALITY CONTROL

A. Perform field inspection and testing in accordance with section 01400.

B. Pressure test water piping to 200 PSI for 2 hours unless otherwise directed (see section 02410).

C. If tests indicate Work does not meet specified requirements, remove Work, replace and retest at no cost to Owner.

END OF SECTION

SECTION 02414

WATER METER VAULT

PART 1 GENERAL

1.01 SECTION INCLUDES

A. Water meter stations, complete, including:

1. Reinforced concrete vault.

2. Pipe, fittings, valves, meter, and appurtenant items.

B. Station testing.

1.02 RELATED SECTIONS

A. Section 02115 - Excavation: Excavating for structures and appurtenant items.

B. Section 02116 - Fill and Backfill: Pipe bedding and excavation backfilling.

C. Section 02410 - Water Distribution System: Pipe, fittings, valves and appurtenant items.

D. Section 02415 - Disinfection of Water Distribution Systems: Disinfection of station piping.

E. Section 03300 - Cast-in-Place Concrete: Concrete for structures and thrust blocks.

1.03 REFERENCES

A. ASTM A 53 - Standard Specification for Pipe, Steel, Black and Hot-Dipped, Zinc-Coated, Welded and Seamless.

B. ASTM A 234 - Standard Specification for Piping Fittings of Wrought Carbon Steel and Alloy Steel for Moderate and High Temperature Service.

C. ASTM C 858 - Standard Specification for Underground Precast Concrete Utility Structures.

D. AWWA C104/A21.4 - Cement-Mortar Lining for Ductile-Iron Pipe and Fittings for Water; American Water Works Association; (ANSI/AWWA C104/A21.4).

E. AWWA C105/A21.5 - Polyethylene Encasement for Ductile-Iron Pipe Systems; American Water Works Association; (ANSI/AWWA C105/A21.5).

F. AWWA C111/A21.11 - Rubber-Gasket Joints for Ductile-Iron Pressure Pipe and Fittings; American Water Works Association; (ANSI/AWWA C111/A21.11).

G. AWWA C151/A21.51 - Ductile-Iron Pipe, Centrifugally Cast, for Water; American Water Works Association; (ANSI/AWWA C151/A21.51).

H. AWWA C500 - Metal-Seated Gate Valves for Water Supply Service; American Water Works Association.

I. AWWA C504 - Rubber Seated Butterfly Valves; American Water Works Association.

J. AWWA C508 - Swing-Check Valves for Waterworks Service, 2 In. (50 mm) Through 24 In. (600 mm) NPS; American Water Works Association; (ANSI/AWWA C508/C508a).

K. AWWA C509 - Resilient-Seated Gate Valves for Water Supply Service; American Water Works Association; (ANSI/AWWA C509/C509a).

L. AWWA C515 - Reduced-Wall, Resilient-Seated Gate Valves for Water Supply Service; American Water Works Association; (ANSI/AWWA C515).

M. AWWA C600 - Installation of Ductile-Iron Water Mains and Their Appurtenances; American Water Works Association; (ANSI/AWWA C600).

N. Use the latest issue of the above reference standards as of the date of the Project.

1.04 SUBMITTALS

A. See Section 01300 - Administrative Requirements, for submittal procedures.

B. Product Data: Provide data on pipe materials, pipe fittings, valves, meters, and accessories.

C. Manufacturer's Certificate: Certify that products meet or exceed specified requirements.

D. Project Record Documents: Record actual locations of pipe lines, valves, meters, connections, thrust restraints, and invert elevations. Identify and describe unexpected variations to subsoil conditions or discovery of uncharted utilities.

1.05 QUALITY ASSURANCE

A. Perform Work in accordance with City's requirements as described herein.

1.06 DELIVERY, STORAGE, AND HANDLING

A. Deliver and store valves, valves and appurtenant items in shipping containers with labeling in place.

PART 2 PRODUCTS

2.01 REINFORCED CONCRETE VAULT

A. Reinforced Concrete Vault. The reinforced concrete vault is shown on the drawings as constructed of poured-in-place concrete; but a precast reinforced concrete vault may be provided at the option of the Contractor.

1. Concrete work shall conform to applicable requirements of Section 03300.

2. Poured-in-Place Concrete. A poured-in-place reinforced concrete vault, of the size indicated on the drawings, may be constructed; which shall conform to applicable requirements of Section 03300.
   a. Poured-in-place concrete vault shall have wall thickness of 9-inch minimum, bottom slab thickness of 6-inch minimum, and top slab thickness of 9-inch minimum; designed for H-20 highway loading.
   b. Submit construction drawings of the vault for review by the City Engineer, before any work is begun. The drawings shall be stamped by a structural engineer.

3. Precast Concrete. A precast reinforced concrete vault of equal dimensional and strength characteristics, as determined by the Engineer during shop drawing review, may be provided. Precast vault shall have wall thickness of 9-inch minimum, bottom slab thickness of 6-inch minimum, and top slab thickness of 9-inch minimum; designed for H-20 highway loading.
   a. Precast vault shall conform to ASTM C 858; and shall be as manufactured by Amcor-White, Inc., Dura-Crete, or other manufacturer acceptable to the City Engineer.

4. Reinforcement. Reinforcing steel shall be as specified in Section 03300, using Grade 60 bar of the size(s) shown on the drawings.

5. Steps. Plastic encased steel steps shall be installed in station walls; spaced at 12-inches on center and centered under the access opening, as directed by the Engineer. Steps shall be copolymer poly-

propylene-encased, 60,000 tensile strength steel, Model PSI-FF manhole steps, as manufactured by M. A. Industries, Inc., or steps accepted to the City Engineer.

B. Access Doors: The access door leaf and channel frame, with strap anchors, shall be constructed of steel with hot-dip galvanized finish (ASTM 123); designed for H-20 highway loading. Doors shall be provided with 316 stainless steel hardware throughout; including all parts of the latch and lifting mechanism assemblies, hold open arms and guides, and all brackets, hinges, pins and fasteners. The doors shall have recessed hasp covered by a hinged lid flush with the surface of the door.
   a. The access doors shall be Type J Access Doors as manufactured by The Bilco Company, or other manufacturers acceptable to the City Engineer, of the size indicated on the drawings. The manufacturer shall guarantee the door against defects in material and workmanship for a period of five years.

C. Proprietary Items. Provide proprietary items of the type, size and manufacture noted on the drawings or as required to complete the work, or items acceptable to the City Engineer.

D. Miscellaneous Metal Work. Furnish and erect miscellaneous metal work as required to complete the pressure regulating station, as described herein and as shown on the drawings.

   1. Codes. Specifications for the Design, Fabrication and Erection of Structural Steel for Buildings of the American Institute of Steel Construction shall govern the work. Welding shall be done in accordance with AWS D1.1 of the American Welding Society Standards.

   2. Substitutions. Substitutions of sections or modifications of details, or both, and the reasons therefor shall be submitted for acceptance by the City Engineer.

   3. Responsibility for Errors. The Contractor shall be responsible for all errors of detailing, fabrication, erection, and correct fitting of the miscellaneous metal work.

   4. Materials. Material shall conform to their respective specifications as follows:
      a. Bolts and Nuts: ASTM Standard A-307
      b. Gray Iron Castings: A-48 Class 40 or Better
      c. Structural Steel: ASTM Standard A-36
      d. Washers: ASTM Standard B-27.2, Type B
      e. Miscellaneous Items: Miscellaneous items shall be as indicated on the drawings or as required.

E. Painting. All exposed pipe, valves, fittings, and metal work inside of the station shall be painted with either: four coats of alkyd paint, Painting System II (Steel Structural Painting Council - Specification No. 2); or four coats of phenolic paint, Painting System III (Steel Structural Painting Council - Specification No. 3). Painting shall include surface preparation, pretreatment, primer coat, inter-mediate coats, and finish coat, as specified; with total dry film thickness not less than 4.0 mils. Aluminum surfaces which will be in contact with concrete after erection shall be coated with bituminous mastic coating, SSPC-Paint 12, prior to erection.

2.02 METER STATION PLUMBING

A. Pipe and Fittings.

   1. Ductile Iron Pipe: AWWA C151: See Section 02410. Exposed pipe and fittings shall not be coated with coal tar pitch varnish; but shall be painted as specified herein.

   2. Copper Tubing: ASTM B 88, Type K, annealed: See Section 02410.

   3. Galvanized Steel Pipe: ASTM A 53: Galvanized steel pipe shall be Schedule 80, seamless or welded pipe, with threaded ends. Fittings shall be 150 lb. galvanized malleable iron banded type, with screwed ends. Unions shall be galvanized railroad type with ground brass-to-iron seats.

B. Valves.

   1. Manufacturer's name and pressure rating marked on valve body.

   2. Gate Valves Up To 3 Inches:

a. Brass or Bronze body, non-rising stem, inside screw, single wedge or disc, IPS ends, and handwheel.

b. Product: Powell U.S. Bronze Gate Valves, or other valves acceptable to the City Engineer.
c. Substitutions: See Section 01600 - Product Requirements.

3. Gate Valves 3 Inches and Over:
   a. AWWA C509, iron body, bronze trim, non-rising stem with square nut, single wedge, resilient seat, flanged ends as indicated, and cast iron valve box.
   b. AWWA C515, ductile iron, bronze trim, non-rising stem with square operating nut, single ductile iron wedge, mechanical joint or flanged ends as indicated, and cast iron valve box.
   c. Product: Mueller Gate Valves or Resilient Seat Gate Valves, or American Flow Control Series 2500 Resilient Seat Gate Valves; with appropriate type Pacific States Cast Iron Valve Box, or accepted equal.

4. Butterfly Valves From 2 Inches to 24 Inches:
   a. AWWA C504, iron body, bronze disc, resilient replacement seat, flanged ends as indicated, and manual worm gear operator.
   b. Valve operator shall be geared to close valves slowly. Number of turns to close valve from full open position shall be: 32 turns for 10-inch and smaller valves, 52 turns for 12-inch thru 16-inch valves, and 76 turns for 18-inch thru 24-inch valves. Closing times for larger valves shall be accepted by the Engineer.
   c. Product: Mueller "Lineseal III" Butterfly Valve with appropriate type manual worm gear operator.

5. Combination Air-Vacuum Release Valves.
   a. Valves shall be designed to release large quantities of air from pipes during filling, admit large quantities of air into pipes during draining, and release small accumulations of air during normal operation of pipes.
   b. Valves shall be equal in quality to "Heavy-Duty Combination Air Release Valves, No. 143C", as manufactured by Valve and Primer Corp. (APCO); and shall meet the provisions of these specifications.

6. Strainers:
   a. Strainers shall have cast iron bodies and covers, stainless steel strainer and stainless steel bolts.
   b. End flanges shall be ANSI class 125 standard flanges
   c. Stainless steel strainers shall have an area of two times the nominal inlet pipe opening.
   d. Strainers shall be designed for easy access and in-line servicing of strainer element; and shall have drain plugs for periodic flushing.

C. Meters. Meters shall be of design, type, size and manufacturer as acceptable to the City Engineer.

D. Miscellaneous Items.

1. Flanged Coupling Adapters. The flanged coupling adapters shall be Rockwell Type 912 or Type 913, or other couplings acceptable to the City Engineer, with anchor studs as recommended by the manufacturer; for connecting ductile iron pipe to the flanged valves, equipment and fittings.

2. Mechanical Couplings. The mechanical couplings shall be Dresser, Rockwell, or other couplings acceptable to the City Engineer, for connecting the size and type of pipe shown on the drawings. Couplings exposed to soil shall be primed and coated with a 1/4-inch layer of coal tar or approved rust preventing wax compound.
3. Gauges. Gauges shall be as shown on the drawings and of the size and quality equal to or better than United States Gauge "A" Line, Figure No. 5000. Gauges shall have a range of 0 to 350 psi.

4. Gauge Cocks. Gauge cocks shall be of high grade bronze with tee head; designed for 200 psi water pressure, and factory-tested to 300 psi; Crane Nos. 708, 712, 744, or other valves acceptable to the City Engineer.

5. Service Clamps: shall be bronze, double-strap type; Mueller No. H-16134, or other clamps acceptable

to the City Engineer, for up to 2 inch service lines.

6. Other Items. Other miscellaneous materials shall be as indicated on the drawings.

E. Hangers, Supports and Blocks.

1. Provide all hangers, supports, clamps, guides, sleeves, inserts, anchors and other such devices required for hanging or supporting pipe, preserving alignment, prevention of movement, passage of pipe through walls and floors, or securing pipe in any manner. The required number, location and detail of such items may or may not be indicated on the drawings; but, in any case, such work shall be provided as work incidental to furnishing and installing any type of pipe, fittings and appurtenances, and no extra payment will be made for this work.
   a. Piping shall be supported or suspended in such manner as to prevent sagging or over stressing of pipe, valves, fittings or connections; and so that no pipe, fittings, valves or other items transfer load or strain to equipment of any kind.

2. Supports.
   a. Concrete supports shall be installed under pipe and valves wherever shown on the drawings. Concrete supports shall be neatly constructed and finished, as indicated on the drawings and as directed by the Engineer. No supports shall be made until all pipe is in its final position.
   b. All other pipe supports shall be of the adjustable type of the style and size recommended by the manufacturer; and shall be located as indicated on the drawings and as directed by the City Engineer. Floor flanges shall be of the size required to fit the pipe attached to the saddle support and as recommended by the manufacturer. Adjustable pipe supports shall be used as kick blocks for pipe in open locations.

3. Blocks. Concrete thrust blocks shall be used wherever shown on the drawings or where thrust is great enough, in the City Engineer's opinion, to cause movement of the piping.

F. Miscellaneous. Miscellaneous appurtenant items shall be as indicated on the drawings or as required to complete the station.

2.03 BEDDING AND BACKFILL MATERIALS

A. Bedding: As specified in Sections 02115 and 02116.

B. Backfill: As specified in Sections 02115 and 02116.

2.04 ACCESSORIES

A. Concrete for Thrust Restraints: Concrete type specified in Section 03300.

PART 3 EXECUTION

3.01 GENERAL

A. The Contractor shall furnish all labor, materials and equipment as required to construct the water meter station, complete, as described herein, as shown on the drawings, and as directed by the City Engineer.

B. All work shall be done according to local plumbing codes, and to manufacturer’s written instructions and recommendations.

C. The Contractor shall test the station to assure proper operation.

3.02 EXAMINATION

A. Verify that design drawings conform to project conditions.

B. Verify that water main size, location, and invert are as indicated.

3.03 PREPARATION

A. Cut pipe ends square, ream pipe ends to full pipe diameter, remove burrs.

B. Remove scale and dirt on inside and outside before assembly.

C. Prepare pipe connections to equipment with flanges or mechanical joints.

3.04 EXCAVATING

A. Excavating for the meter station shall be done to ensure proper grades and alignment as shown on the drawings.

B. See Section 02112 and Sections 02115 and 02116 for additional requirements.

C. Hand trim excavation for accurate construction or placement of concrete vault to elevations indicated.

D. Backfill around structure with backfill material, tamp in place and compact to required densities.

3.05 CONSTRUCTION - VALVE VAULT

A. Construct the vault for the meter station at the location indicated on the drawings and as directed by the City Engineer or Inspector; in accordance with the details shown on the drawings and as specified herein.

B. Earthwork shall be done in accordance with applicable requirements of Section 02115.

1. Foundation Material. Where native material encountered at the foundation depth is considered unsuitable by the Engineer, the unsuitable material shall be removed and replaced by the appropriate borrow material.

2. Excess Material. Unsatisfactory and excess excavated materials shall be removed from the work site and legally disposed of.

C. Concrete Work. Comply with requirements of Section 03300, for placement, consolidation, finishing and protection of cast-in-place concrete and reinforcement.

D. Precast Concrete Vault. Precast concrete vault shall be installed level and plumb, in accordance with the manufacturer's written instructions and recommendations.

E. Access Door: Install according to manufacturer’s written instructions and recommendations.

F. Miscellaneous Metal Work.

1. Miscellaneous metal work shall be fabricated and assembled in the shop to the greatest extent possible.

2. Miscellaneous metal work shall be erected in conformity with AISC Code of Standard Practice.

3.06 INSTALLATION - PLUMBING

A. All pipe, fittings, meters, valves, equipment and appurtenant items, together with supports and anchors, shall be installed as specified herein and as indicated on the drawings; in conformity with State plumbing codes.

B. Equipment shall be installed as shown on the drawings, and in accordance with accepted manufacturer's written instructions.

C. Strainers shall be installed upstream of all meters with a No. 4, 100 micron, screen.

D. All material and workmanship shall conform to applicable requirements of the Utah Plumbing Code.

E. Establish elevations of buried piping to ensure not less than four feet of cover over pipe; or as indicated on the drawings and as directed by the City Engineer or City Inspector.

F. Install pipe to indicated elevation to within tolerance of one inches.

G. Install ductile iron piping and fittings to AWWA C600.

H. Install pipe to allow for expansion and contraction without stressing pipe or joints.

I. Install access fittings to permit disinfection of water system performed under Section 02415.

J. Set valves on concrete block or other acceptable solid bearing.

K. After plumbing system has been installed and completed, it shall be tested and disinfected as specified herein; including an operating test for acceptance of the work. Tests shall be performed in the presence of the City Engineer or his authorized representative.

3.07 FIELD QUALITY CONTROL

A. Perform field inspection and testing in accordance with Section 01400.

B. Pressure test water piping to 200 PSI for 2 hours unless otherwise directed (see section 02410).

C. If tests indicate Work does not meet specified requirements, remove Work, replace and retest at no cost to Owner.

3.08 OPERATIONAL TESTING

A. Provide City Engineer with seven days written notice of operational test of backflow preventer.

B. Test shall consist of the operation of the station for propose of checking operation and assuring of absence of leaks.

1. Repair pipe, fittings, valves, or connections which show evidence of leakage.

C. After all repairs or replacements have been made and accepted by the City Engineer, repeat the above required test.

END OF SECTION

SECTION 02415

DISINFECTION OF WATER DISTRIBUTION SYSTEM

PART 1 GENERAL

1.01 SECTION INCLUDES

A. Disinfection of project pipe lines specified in Section 02410.

B. Disinfection of site domestic water lines, site fire water lines, and hydrant supply lines and water service lines specified in Section 02410.

C. Testing and reporting results.

1.02 RELATED SECTIONS

A. Section 02410 - Water Distribution System.

1.03 REFERENCES

A. AWWA B300 - Hypochlorites; American Water Works Association; (ANSI/AWWA B300).

B. AWWA B301 - Liquid Chlorine; American Water Works Association; (ANSI/AWWA B301).

C. AWWA B302 - Ammonium Sulfate; American Water Works Association; (ANSI/AWWA B302).

D. AWWA B303 - Sodium Chlorite; American Water Works Association; (ANSI/AWWA B303).

E. AWWA C651 - Disinfecting Water Mains; American Water Works Association; (ANSI/AWWA C651).

F. Use the latest issue of the above reference standards as of the date of the Project.

1.04 SUBMITTALS

A. See Section 01300 - Administrative Requirements, for submittal procedures.

B. Test Reports: Indicate results comparative to specified requirements.

C. Certificate: Certify that cleanliness of water distribution system meets or exceeds specified requirements.

D. Disinfection report:

1. Type and form of disinfectant used.
2. Date and time of disinfectant injection start and time of completion.
3. Test locations.
4. Initial and 24 hour disinfectant residuals (quantity in treated water) in ppm for each outlet tested.
5. Date and time of flushing start and completion.
6. Disinfectant residual after flushing in ppm for each outlet tested.

E. Bacteriological report:

1. Date issued, project name, and testing laboratory name, address, and telephone number.

2. Time and date of water sample collection.

3. Name of person collecting samples.

4. Test locations.

5. Initial and 24 hour disinfectant residuals in ppm for each outlet tested.

6. Coliform bacteria test results for each outlet tested.

7. Certification that water conforms, or fails to conform, to bacterial standards of State.

1.05 QUALITY ASSURANCE

A. Perform Work in accordance with AWWA C651.

B. Testing Firm: Company specializing in testing potable water systems, certified by governing authorities of Utah.

C. Submit bacteriologist's signature and authority associated with testing.

1.06 REGULATORY REQUIREMENTS

A. Conform to applicable code or regulation for performing the work of this Section.

B. Provide certificate of compliance from authority having jurisdiction indicating approval of water system.

PART 2 PRODUCTS

2.01 DISINFECTION CHEMICALS

A. Chemicals: AWWA B300, Hypochlorite; AWWA B301, Liquid Chlorine; AWWA B302, Ammonium Sulfate; and AWWA B303, Sodium Chlorite.

PART 3 EXECUTION

3.01 EXAMINATION

A. Verify that piping system has been cleaned and inspected.

3.02 EXECUTION

A. Provide and attach required equipment to perform the work of this Section.

B. Introduce treatment into piping system if not already added during installation.

C. Maintain disinfectant in system for 24 hours.

D. Flush, circulate, and clean until required cleanliness is achieved; use municipal domestic water.

E. Replace permanent system devices removed for disinfection.

F. Perform Bacteria test at location directed by City Inspector. After receiving clean bacteria test results, pressure test system to 200 psi for 2 hours. Repair leaks and re-test.

3.03 FIELD QUALITY CONTROL

A. Perform field inspection and testing in accordance with Section 01400.

B. Test samples in accordance with AWWA C651.

END OF SECTION

SECTION 02416

AIR-VACUUM VALVE STATIONS

PART 1 GENERAL

1.01 SECTION INCLUDES

A. Air-Vacuum Valve Stations; including reinforced concrete vault, pipe, fittings, valves, and appurtenant items, as indicated on the drawings and as described herein.

1.02 RELATED SECTIONS

A. Section 02115 - Excavation: Excavating for structures and appurtenant items.

B. Section 02116 - Fill and Backfill: Bedding and backfilling.

C. Section 02410 - Water Distribution System: Pipe, fittings, valves and appurtenant items.

D. Section 02415 - Disinfection of Water Distribution Systems: Disinfection of station piping.

E. Section 03300 - Cast-in-Place Concrete: Concrete for concrete vault and thrust restraints.

1.03 REFERENCES

A. ASTM B 43 - Standard Specifications for Seamless Red Brass Pipe, Standard Sizes.

B. ASTM A 53 - Standard Specification for Pipe, Steel, Black and Hot-Dipped, Zinc-Coated, Welded and Seamless.

C. ASTM C 858 - Standard Specification for Underground Precast Concrete Utility Structures.

D. AWWA C504 - Rubber Seated Butterfly Valves; American Water Works Association.

E. AWWA C509 - Resilient-Seated Gate Valves for Water Supply Service; American Water Works Association; (ANSI/AWWA C509/C509a).

F. AWWA C515 - Reduced-Wall, Resilient-Seated Gate Valves for Water Supply Service; American Water Works Associations; (ANSI/AWWA C515).

G. Use the latest issue of the above reference standards as of the date of the Project.

1.04 SUBMITTALS

A. See Section 01300 - Administrative Requirements, for submittal procedures.

B. Product Data: Provide data on pipe materials, pipe fittings, valves and accessories.

C. Manufacturer's Certificate: Certify that products meet or exceed specified requirements.

D. Project Record Documents: Record actual locations of pipe lines, valves, connections, thrust restraints, and invert elevations. Identify and describe unexpected variations to subsoil conditions or discovery of uncharted utilities.

1.05 QUALITY ASSURANCE

A. Perform Work in accordance with Owner's requirements as described herein.

1.06 DELIVERY, STORAGE, AND HANDLING

A. Deliver and store valves and appurtenant items in shipping containers with labeling in place.

PART 2 PRODUCTS

2.01 GRAVEL BASE. Gravel shall conform to the requirements of Section 02116.

2.02 REINFORCED CONCRETE VAULT

A. Precast Riser Sections. Riser sections shall be reinforced concrete pipe sections, class IV, with tongue and groove joints; meeting the requirements of ASTM C 76. Riser sections shall extend from the top of the base to the bottom of the cover slab.

1. Joints. Joints between precast sections, except grade rings, shall be sealed with pre-lubricated rubber gaskets conforming to requirements of ASTM C443 and C361; and shall be equal to Forsheda No. 114 Seal, as manufactured by Forsheda Pipe Seal Company.

B. Top Sections. Top sections shall be precast flat slab tops, with top opening of 30-inch diameter, minimum. Design shall be based on H-20 live loading and one-foot minimum earth cover.

C. Grade Rings. Precast grade rings shall be provided as required to adjust height of cover slab. The maximum height of the grade rings shall be 12-inches; and shall have key locks and use mastic sealer to insure water-tightness.

D. Concrete. Concrete, poured-in-place, and grout shall conform to applicable requirements of Section 03300.

E. Frames and Covers. Frames and covers shall be cast iron with a 22 3/4-inch diameter clear opening; and shall be gravity, solid, non-rocking, heavy duty type meeting requirements for Salt Lake City Standard Manhole Rings and Covers. Covers shall be vented in improved areas and solid in unimproved areas, as directed; shall have cleated surfaces and pick holes; and shall be marked with “SARATOGA SPRINGS” and either “WATER” or “PRESSURE IRRIGATION”.

1. Castings. Castings shall be of uniform quality free of porosity, hard spots, and shrinkage defects. Exposed surfaces shall be smooth and true to pattern. Iron shall conform to ASTM A48, Gray Iron Castings, Grade B.

F. Proprietary Items. Provide proprietary items of the type, size and manufacture noted on the drawings or as required to complete the work, or other items acceptable to the City Engineer.

2.03 VALVE STATION PLUMBING

A. Pipe and Fittings.

1. Ductile Iron Pipe: AWWA C151: See Section 02510. Exposed pipe and fittings shall not be coated with coal tar pitch varnish; but shall be painted as specified herein.

2. Copper Tubing: ASTM B 88, Type K, annealed: See Section 02410.

3. Red Brass Pipe: ASTM B 53, Red brass pipe shall be Schedule 80, seamless pipe with threaded ends. Fittings shall be Schedule 80 with screwed ends.

B. Valves.

1. Manufacturer's name and pressure rating marked on valve body.

2. Gate Valves Up To 3 Inches:

a. Brass or Bronze body, non-rising stem, inside screw, single wedge or disc, IPS ends, and handwheel operator.
b. Product: Powell U.S. Bronze Gate Valves, or other valves acceptable to the City Engineer.
c. Substitutions: See Section 01600 - Product Requirements.

3. Gate Valves 3 Inches and Over:
   a. AWWA C509, iron body, bronze trim, non-rising stem with square nut, single wedge, resilient seat, flagged ends as indicated and cast iron valve box.
   b. AWWA C515, ductile iron, bronze trim, non-rising stem with square operating nut, single ductile iron wedge, mechanical joint or flanged ends as indicated, and cast iron valve box.
   c. Product: Mueller Gate Valves or Resilient Seat Gate Valves, or American Flow Control Series 2500 Resilient Seat Gate Valves; with appropriate type Pacific States Cast Iron Valve Box, or accepted equal.

4. Combination Air-Vacuum Release Valves.
   a. Valves shall be designed to release large quantities of air from pipes during filling, admit large quantities of air into pipes during draining, and release small accumulations of air during normal operation of pipes.
   b. Valves shall be equal in quality to "Heavy-Duty Combination Air Release Valves", of the appropriate type and size, as manufactured by Valve and Primer Corporation (APCO); and shall meet the provisions of these specifications.

5. Hose Gate Valves.
   a. Hose gate valves shall be high grade brass with handwheel, inside screw ends, rising stem, screwed bonnet, taper wedge double disc. Valve shall be designed to operate at 200 psi water pressure.
   b. Hose gate valves shall be equal to Powell U.S. Bronze Hose Gate Valve No. 527, or other valves acceptable to the City Engineer.

C. Miscellaneous Items.

1. Flanged Coupling Adapters. The flanged coupling adapters shall be Rockwell Type 912 or Type 913, or other couplings acceptable to the City Engineer, with anchor studs as recommended by the manufacturer; for connecting ductile iron pipe to the flanged valves, equipment and fittings.

2. Mechanical Couplings. The mechanical couplings shall be Dresser, Rockwell, or other couplings acceptable to the City Engineer, for connecting the size and type of pipe shown on the drawings. Couplings exposed to soil shall be primed and coated with a 1/4-inch layer of coal tar or approved rust preventing wax compound.

3. Gauges. Gauges shall be as shown on the drawings and of the size and quality equal to or better than United States Gauge "A" Line, Figure No. 5000. Gauges shall have a range of 0 to 350 psi.

4. Gauge Cocks. Gauge cocks shall be of high grade bronze with tee head; designed for 200 psi water pressure, and factory-tested to 300 psi; Crane Nos. 708, 712, 744, or other valves acceptable to the City Engineer.

5. Service Clamps: shall be bronze, double-strap type; Mueller No. H-16134, or other clamps acceptable to the City Engineer, for up to 2 inch service lines.

6. Other Items. Other miscellaneous materials shall be as indicated on the drawings and as required to complete the station.

D. Hangers and Supports. Provide all hangers, supports, clamps, guides, sleeves, inserts, anchors and other such devices required for hanging or supporting pipe, preserving alignment, prevention of movement, passage of pipe through walls and floors, or securing pipe in any manner. The required number, location and detail of such items may or may not be indicated on the drawings; but, in any case, such work shall be provided as work incidental to furnishing and installing any type of pipe, fittings and appurtenances, and no extra payment will be made for this work.

a. Piping shall be supported or suspended in such manner as to prevent sagging or over stressing of pipe, valves, fittings or connections; and so that no pipe, fittings, valves or other items transfer load or strain to equipment of any kind.

2.04 BEDDING AND BACKFILL MATERIALS

A. Bedding: As specified in Sections 02115 and 02116.

B. Backfill: As specified in Sections 02115 and 02116.

2.05 ACCESSORIES

A. Concrete for Thrust Restraints: Concrete type specified in Section 03300.

PART 3 EXECUTIONS

3.01 EXAMINATION

A. Verify that water main size, location, and invert are as indicated.

3.02 PREPARATION

A. Cut pipe ends square, ream pipe ends to full pipe diameter, remove burrs.

B. Remove scale and dirt on inside and outside before assembly.

C. Prepare pipe connections to equipment with flanges or mechanical joints.

3.03 EXCAVATING

A. See Section 02112 and Sections 02115 and 02116 for additional requirements.

B. Hand trim excavation for accurate placement of station to elevations indicated.

C. Backfill around sides and to top of valve vault with backfill material, tamp in place and compact.

3.04 CONSTRUCTION - VALVE VAULT

A. Construct the vault for the air-vacuum valve station at the location indicated on the drawings and as directed by the City Engineer; in accordance with the details shown on the drawings and as specified herein.

B. Earthwork shall be done in accordance with applicable requirements of Section 02115.

1. Foundation Material. Where native material encountered at the foundation depth is considered unsuitable by the City Engineer, the unsuitable material shall be removed and replaced by the appropriate borrow material.

2. Excess Material. Unsatisfactory and excess excavated materials shall be removed from the work site and legally disposed of.

C. Concrete Work. Comply with requirements of Section 03300, for placement, consolidation, finishing and protection of cast-in-place concrete.

D. Precast Items. Precast riser sections shall be installed, from the gravel base to the cover slab, in accordance with the manufacturer's recommendations; and shall be installed to stand plumb. Precast flat slab tops shall be installed on the top riser section; with the opening positioned as directed. The top of concrete flat slab tops shall be approximately 12-inches below final surface elevations, unless otherwise directed by the City Engineer.

E. Placement of Frame and Cover.

1. Placement. After the top slab of the station has been placed, the cast iron frame and cover shall be installed into the opening in the top slab; using precast grade rings to place the cover flush with adjacent finish grade.

2. Grouting. After placement of the frame and cover, grout around the exterior of the frame from the top of concrete top slab to the top of frame, as indicated on the drawing and as directed by the City Engineer, to insure a watertight condition.

F. Flexible Pipe Couplings. A pipe joint or flexible coupling shall be provided on all pipes connected to the stations, located approximately 18-inches from the outside of the station. The joint or coupling shall be of the same size as the pipe, and shall be as recommended by the pipe manufacturer.

G. Miscellaneous Metal Work.

1. Miscellaneous metal work shall be fabricated and assembled in the shop to the greatest extent possible.

2. Miscellaneous metal work shall be erected in conformity with AISC Code of Standard Practice.

3.05 INSTALLATION - PLUMBING

A. All pipe, fittings, valves, equipment and appurtenant items, together with supports and anchors, shall be installed and connected to operate as specified herein and as indicated on the drawings; in conformity with State plumbing codes, and in conformity to good and acceptable plumbing practices.

B. Equipment shall be installed as shown on the drawings, and in accordance with accepted manufacturer's written instructions.

C. All material and workmanship shall conform to applicable requirements of the Utah Plumbing Code.

D. Establish elevations of buried piping to ensure not less than four feet of cover over pipe; or as indicated on the drawings and as directed by the City Engineer or City Inspector.

E. Install pipe as required to indicate elevation to within tolerance of one inches.

F. Install pipe to allow for expansion and contraction without stressing pipe or joints.

G. Install access fittings to permit disinfection of water system performed under Section 02415.

H. Set valves on concrete block or other acceptable solid bearing.

I. Mechanical couplings exposed to soil shall be primed and coated with 1/4-inch layer of coal tar, or accepted rust preventing wax compound.

J. Adjustable pipe supports shall be used to support pipe and valves, as directed by the City Engineer; and shall be equal to Grinnell Company Figure 264.

K. After plumbing system has been installed and completed, it shall be tested to show its functional fitness by operating the station as directed; and shall be tested for water-tightness as specified herein; and disinfected as specified herein. Tests shall be performed in the presence of the City Engineer or his authorized representative.

L. Buried pipe or otherwise inaccessible pipe shall be tested before it is concealed, and again in connection with the final testing.

3.06 FIELD QUALITY CONTROL

A. Perform field inspection and testing in accordance with Section 01400.

B. Pressure test water piping to 200 psi for 2 hours unless otherwise directed.

C. If tests indicate Work does not meet specified requirements, remove Work, replace and retest at no cost to Owner.

END OF SECTION

SECTION 02580

SECONDARY WATER SYSTEM

PART 1 GENERAL

1.01 SECTION INCLUDES

A. Pipe and fittings for project water lines, to include secondary water lines.

B. Valves and appurtenant items.

C. Water Service Connections.

1.02 RELATED SECTIONS

A. Section 02112 - Trenching for Pipe Work: Excavating, bedding, backfilling and compacting.

B. Section 02115 - Excavation: Excavating for structures and appurtenant items.

C. Section 02116 - Fill and Backfill: Bedding and backfilling.

D. Section 02340 - Manholes and Covers.

E. Section 03300 - Cast-in-Place Concrete: Concrete for thrust restraints.

1.03 REFERENCES

A. ASTM D 3139 - Standard Specification for Joints for Plastic Pressure Pipes using Flexible Elastomeric Seals.

B. ASTM D 3035 - Standard Specification for Polyethylene (PE) Plastic Pipe (DR-PR) Based on Controlled Outside Diameter.

C. AWWA C104/A21.4 - Cement-Mortar Lining for Ductile-Iron Pipe and Fittings for Water; American Water Works Association; (ANSI/AWWA C104/A21.4).

D. AWWA C105/A21.5 - Polyethylene Encasement for Ductile-Iron Pipe Systems; American Water Works Association; (ANSI/AWWA C105/A21.5).

E. AWWA C111/A21.11 - Rubber-Gasket Joints for Ductile-Iron Pressure Pipe and Fittings; American Water Works Association; (ANSI/AWWA C111/A21.11).

F. AWWA C151/A21.51 - Ductile-Iron Pipe, Centrifugally Cast, for Water; American Water Works Association; (ANSI/AWWA C151/A21.51).

G. AWWA C500 - Metal-Seated Gate Valves for Water Supply Service; American Water Works Association.

H. AWWA C504 - Rubber Seated Butterfly Valves; American Water Works Association.

I. AWWA C508 - Swing-Check Valves for Waterworks Service, 2 In. (50 mm) Through 24 In. (600 mm) NPS; American Water Works Association; (ANSI/AWWA C508/C508a).

J. AWWA C509 - Resilient-Seated Gate Valves for Water Supply Service; American Water Works Association; (ANSI/AWWA C509/C509a).

K. AWWA C515 - Reduced-Wall, Resilient-Seated Gate Valves for Water Supply Service; American Water Works Association; (ANSI/AWWA C515).

L. AWWA C600 - Installation of Ductile-Iron Water Mains and Their Appurtenances; American Water Works Association; (ANSI/AWWA C600).

M. ASTM D2774 - Standard Recommended Practice for Underground Installation of Thermoplastic Pressure Piping.

N. AWWA C900 - Polyvinyl Chloride (PVC) Pressure Pipe, 4 In. Through 12 In., for Water Distribution; American Water Works Association; (ANSI/AWWA C900/C900a).

O. AWWA C901 - Polyethylene (PE) Pressure Pipe and Tubing, 1/2 inch through 3 inch, for Water Service; American Water Works Association.

P. AWWA C906 - Polyethylene (PE) Pressure Pipe and Fittings, 4 inch through 63 inch, for Water Distribution; American Water Works Association.

Q. AWWA C200 - Steel Water Pipe Casing, 6-inches and larger as needed.

R. Use the latest issue of the above reference standards as of the date of the Project.

1.04 SUBMITTALS

A. See Section 01300 - Administrative Requirements, for submittal procedures.

B. Product Data: Provide data on pipe materials, pipe fittings, valves and accessories.

C. Manufacturer's Certificate: Certify that products meet or exceed specified requirements.

D. Project Record Documents: Record actual locations of pipe lines, valves, connections, thrust restraints, and invert elevations. Identify and describe unexpected variations to subsoil conditions or discovery of uncharted utilities.

1.05 QUALITY ASSURANCE

A. Perform Work in accordance with the City's requirements as described herein.

1.06 DELIVERY, STORAGE, AND HANDLING

A. Deliver and store valves in shipping containers with labeling in place.

PART 2 PRODUCTS

2.01 WATER PIPE

A. Ductile Iron Pipe: AWWA C151:

1. Fittings: Ductile iron, standard thickness.

2. Joints:
   a. Push-On Joints: AWWA C111, push-on type with rubber gasket.
   b. Mechanical Joints: AWWA C111, mechanical joint type with gasket, bolts, and nuts.
   c. Flange Joints: AWWA C110, flange type with gasket, bolts, and nuts.

3. Jackets: AWWA C105 polyethylene jacket; purple color.

B. PVC Pipe: AWWA C900 Class 200, DR-18 as indicated:

1. Fittings: AWWA C111, cast iron.

2. Joints: ASTM D 3139 compression gasket ring.

C. Polyethylene Pipe: ASTM D 3035, for 200 psi pressure rating:

1. Fittings: AWWA C901, molded or fabricated.

2. Joints: Compression.

D. High Density Polyethylene Pipe: AWWA C906:

1. Material: PE 3408 High Density Polyethylene (HDPE) meeting ASTM D3350 cell classification of 345434C.

2. Fittings: AWWA C906, molded or fabricated; or mechanical joint ductile iron fittings.

3. Joints: Butt fusion.

E. Trace Wire: Number 14 gauge detectable conductor. Provide testing for continuity. Placed on all buried pipe.

F. Detector Tape: Purple plastic tape, imprinted with "PRESSURIZED IRRIGATION" in large letters. Placed on all buried pipe.

2.02 CASING PIPE MATERIALS

A. Welded Steel Pipe: AWWA C 200, steel water pipe; diameter as indicated.

B. Casing Insulators: fusion coated steel casing insulators with 12-inch wide band and 2-inch wide glass reinforced plastic runners; Model C12G-2, manufactured by Pipeline Seal and Insulator, Inc. or acceptable equal.

C. Casing End Seals: flexible S-shaped seals fabricated on synthetic rubber with stainless steel bands and clamps; Model S Pull-On End Seals, manufactured by Pipeline Seal and Insulator, Inc., or acceptable equal.

2.03 VALVES

A. Valves: Manufacturer's name and pressure rating marked on valve body.

B. Gate Valves Up To 3 Inches:

1. Brass or Bronze body, non-rising stem, inside screw, single wedge or disc, IPS ends, and handwheel.

2. Product: Powell U.S. Bronze Gate Valves, or other valves acceptable to the City Engineer.

3. Substitutions: See Section 01600 - Product Requirements.

C. Gate Valves 3 Inches and Over:

1. AWWA C500, iron body, bronze trim, non-rising stem with square nut, single wedge, mechanical joint or flanged ends as indicated, and cast iron valve box.

2. AWWA C509, iron body, bronze trim, non-rising stem with square nut, single wedge, resilient seat, mechanical joint or flanged ends as indicated, and cast iron valve box.

3. AWWA C515, ductile iron, bronze trim, non-rising stem with square operating nut, single ductile iron wedge, mechanical joint or flanged ends as indicated, and cast iron valve box.

4. Product: Mueller Gate Valves or Resilient Seat Gate Valves, or American Flow Control Series 2500 Resilient Seat Gate Valves; with appropriate type Pacific States Cast Iron Valve Box, or accepted equal.

D. Ball Valves Up To 2 Inches:

1. Brass body, Teflon coated brass ball, rubber seats and stem seals, Tee stem pre-drilled for control rod, compression inlet end, compression outlet, with control rod, valve key, and extension box.

E. Swing Check Valves From 2 Inches to 24 Inches:

1. AWWA C508, iron body, bronze trim, 45 degree swing disc, renewable disc and seat, flanged ends.

2. Product: Mueller Swing-Type Check Valve, or other valves acceptable to the City Engineer.

F. Butterfly Valves From 2 Inches to 24 Inches:

1. AWWA C504, iron body, bronze disc, resilient replacement seat, mechanical joint or flanged ends as indicated, manual worm gear operator, and cast iron valve box where required.

2. Underground manual operators shall be totally enclosed, factory grease packed and sealed, bronze worm gear operators with self-locking gearing; stops shall be provided to prevent over travel of valve disc.

3. Valve operator shall be geared to close valves slowly. Number of turns to close valve from full open position shall be: 32 turns for 10-inch and smaller valves, 52 turns for 12-inch thru 16-inch valves, and 76 turns for 18-inch thru 24-inch valves. Closing times for larger valves shall be accepted by the Engineer.

4. Product: Mueller "Lineseal III" Butterfly Valve with appropriate type Pacific States Cast Iron Valve Box, or other valves acceptable to the City Engineer.

G. Corporation Stops: shall be type for connecting to copper or polyethylene pipe; Mueller No. H- 15000, or other stops acceptable to the City Engineer, for up to 2-inch service line.

H. Air Release Valves: shall be combination air release valves; APCO Combination Air Release Valves, or other valves acceptable to the City Engineer, of size indicated on the drawings.

I. Blow-Off Hydrant: shall be Non-Freezing Blow-Off Assembly, or other as acceptable to the City Engineer.

2.04 SECONDARY WATER CONNECTIONS

A. Secondary water connections shall be constructed as indicated on the drawings and as directed by the City Engineer.

B. Connections shall include meter boxes, meters, valve boxes, stop & water valves, and all appurtenant items, As indicated on the drawings and as directed.

2.05 BEDDING AND COVER MATERIALS

A. Bedding: As specified in Sections 02112 and 02116.

B. Backfill: As specified in Sections 02112 and 02116.

2.06 ACCESSORIES

A. Service Clamps: shall be bronze, double-strap type; Mueller No. H-16134, or other clamps acceptable to the City Engineer, for up to 2 inch service lines.

B. Concrete for Thrust Restraints: Concrete type specified in Section 03300.

C. Manhole and Cover: Refer to Section 02340.

PART 3 EXECUTION

3.01 EXAMINATION

A. Verify that water main and main line tee size, location, and invert are as indicated.

3.02 PREPARATION

A. Cut pipe ends square, ream pipe ends to full pipe diameter, remove burrs.

B. Remove scale and dirt on inside and outside before assembly.

C. Prepare pipe connections to equipment with flanges or mechanical joints.

3.03 TRENCHING

A. See Section 02112 and Sections 02115 and 02116 for additional requirements.

B. Hand trim excavation for accurate placement of pipe to elevations indicated.

C. Form and place concrete for pipe thrust restraints at each change of pipe direction. Place concrete to permit full access to pipe and pipe accessories. Provide required sq ft of thrust restraint bearing on subsoil as indicated on the drawings.

D. Backfill around sides and to top of pipe with backfill material, tamp in place and compact, then complete backfilling.

3.04 INSTALLATION - PIPE

A. Establish elevations of buried piping to ensure not less than 36 inches of cover over pipe; or as indicated on the drawings and as directed by the City Engineer or Inspector.

B. Install pipe to indicated elevation to within tolerance of one inches.

C. Install ductile iron piping and fittings to AWWA C600.

D. Install PVC pressure pipe and fittings to ASTM D2774.

E. Install pipe lines to line and grade indicated.

F. Install pipe to allow for expansion and contraction without stressing pipe or joints.

G. Slope water pipe and position drains at low points.

H. Install trace wire and detector tape above all pipe; coordinate with Section 02112.

3.05 INSTALLATION - CASING PIPES

A. See Sections 02115 and 02116 for structural excavation and fill and backfill; and for additional requirements.

B. Install casing pipes by ramming process where indicated; method to be acceptable to the City Engineer.

C. Install casing pipes at the line and grade as required to allow carrier pipes to be installed within the casing pipes at the design line and grade, as indicated on the drawings.

D. Place casing insulators on carrier pipes to properly center and position carrier pipe inside the casing pipes; space insulators as recommended by the pipe manufacturer.

E. Carrier Pipe inside of casing shall have restrain joints per City Engineer.

F. Seal each end of casing with appropriate size flexible end seals; install according to manufacturer's instructions and recommendations.

G. Seal bore holes at each end, around periphery of casing, with grout, impervious clay or brick masonry, as acceptable to the City Engineer or City Inspector.

H. Contractor shall be solely responsible for the accuracy, safety and adequacy of construction methods and procedures for installing casing pipes, and for any damage which may result from their failure. All operations of the Contractor for installation of casing pipes shall be subject to approval by the agency having jurisdiction over the item being crossed.

I. Contractor shall enter any agreement with, and furnish any and all indemnity and other bonds that may be required by, the agency listed above, for their protection against injury and interference with flow of water caused by the operations of the Contractor.

J. Contractor shall secure required permission from the agency listed above before commencing with the installation of casing pipes and related work along and across the respective areas.

3.06 INSTALLATION - VALVES

A. Set valves on concrete block or other acceptable solid bearing.

B. Center and plumb valve box over valve operating nut. Set box cover flush with finished grade.

3.07 INSTALLATION - AIR RELEASE STATIONS

A. Locate air release stations as indicated on the construction drawings and as directed by the City Engineer.

B. Set air valve and piping plumb according to manufacturer's written instructions and recommendations; set vault plumb on solid foundation.

C. Set top of valve box to grade, with cover matching finish grade.

3.08 SERVICE CONNECTIONS

A. Provide water service lines, as indicated on the drawings. Residential service lines shall include stop & waste valves with valve boxes; meter boxes, valve and appurtenant items; and valve boxes with ball valve; and all appurtenant work. The Developer is to provide meter(s) for multi-family; institutional; and commercial service connections.

B. Water service lines shall extend to locations designated by the City Engineer, which will be near property lines of property being served and inside side-lot PUE, as indicated.

C. All pipe, fittings and valves shall conform to the specifications found elsewhere in this Section.

D. Pipe, fittings and valves shall be installed as described herein and as directed by the City Engineer.

E. Service lines shall be installed at uniform grades and alignments; and shall be free of low spots or adverse grades.

F. Service lines shall be cleaned, flushed and tested in accordance with applicable requirements of these specifications.

3.09 CONNECTIONS TO EXISTING WATER LINES

A. Connection to existing water lines shall be made where and as indicated on the drawings and as directed by the Engineer. The sizes of pipe, fittings, valves and appurtenant items required to make connection shall correspond to the sizes of existing pipe and of project pipe.

B. Excavate to existing pipe line at point of connection; determine actual conditions of existing pipe and all fittings and appurtenant items required to make the connection; and have all materials needed on site prior to any shut down or cutting into existing pipe lines.

C. Connection which involve cutting into existing pipe lines include: cutting and removing sections of existing pipe and fittings as required; cleaning and preparing ends of existing pipe as required for connection; furnishing and installing all new pipe, fittings and valves required to make the connection of project pipe to the existing pipe as indicated; and all appurtenant work required to complete the connection.

D. Connection into existing pipe lines under pressure include: furnishing and installing mechanical joint tapping sleeve of the appropriate size on the existing pipe at point of connection; furnishing and installing tapping valve, with valve box, on sleeve; tapping existing pipe with acceptable type drilling machine and equipment, without interrupting flow in existing pipe line; and all appurtenant work required to complete the connection.

E. Connection to existing pipe line shall be made at such times and within the time limits and according to the directions as agreed to between the Contractor and the City Engineer or City Inspector.

F. Cut and plug existing pipe lines where indicated and as directed by the Engineer. Excavate as required to locate existing pipe lines to be abandoned in place; cut the existing pipe, as required; and install permanent plug in end of pipe to be abandoned.

3.10 CONNECTIONS TO CULINARY WATER LINES

A. Connections of secondary water systems to culinary water systems shall be done as indicated on the drawings and as described in Section 02586 BACKFLOW PREVENTER STATION.

B. Connections of secondary water services to culinary water systems shall be done as indicated on the drawings and as described in Section 02587 SERVICE WATER BACKFLOW PREVENTER STATION.

3.11 FIELD QUALITY CONTROL

A. Perform field inspection and testing in accordance with Section 01400 and 02112.

B. Pressure test water piping to 200 psi for 2 hours, unless as otherwise directed.

C. If tests indicate Work does not meet specified requirements, remove Work, replace and retest at no cost to City.

END OF SECTION

SECTION 02586

BACKFLOW PREVENTER STATION

PART 1 GENERAL

1.01 SECTION INCLUDES

A. Backflow preventer stations, complete, including:

1. Backflow preventer valves.

2. Pipe, fittings, valves, and appurtenant items.

B. Station testing.

1.02 RELATED SECTIONS

A. Section 02112 - Trenching for Pipe Work: Excavating, pipe bedding, backfilling and compacting.

B. Section 02115 - Excavation: Excavating for structures and appurtenant items.

C. Section 02116 - Fill and Backfill: Pipe bedding and excavation backfilling.

D. Section 03300 - Cast-in-Place Concrete: Concrete for structures and thrust blocks.

1.03 REFERENCES

A. ASTM A 53 - Standard Specification for Pipe, Steel, Black and Hot-Dipped, Zinc-Coated, Welded and Seamless.

B. ASTM A 234 - Standard Specification for Piping Fittings of Wrought Carbon Steel and Alloy Steel for Moderate and High Temperature Service.

C. AWWA C104/A21.4 - Cement-Mortar Lining for Ductile-Iron Pipe and Fittings for Water; American Water Works Association; (ANSI/AWWA C104/A21.4).

D. AWWA C105/A21.5 - Polyethylene Encasement for Ductile-Iron Pipe Systems; American Water Works Association; (ANSI/AWWA C105/A21.5).

E. AWWA C111/A21.11 - Rubber-Gasket Joints for Ductile-Iron Pressure Pipe and Fittings; American Water Works Association; (ANSI/AWWA C111/A21.11).

F. AWWA C151/A21.51 - Ductile-Iron Pipe, Centrifugally Cast, for Water; American Water Works Association; (ANSI/AWWA C151/A21.51).

G. AWWA C500 - Metal-Seated Gate Valves for Water Supply Service; American Water Works Association.

H. AWWA C504 - Rubber Seated Butterfly Valves; American Water Works Association.

I. AWWA C508 - Swing-Check Valves for Waterworks Service, 2 In. (50 mm) Through 24 In. (600 mm) NPS; American Water Works Association; (ANSI/AWWA C508/C508a).

J. AWWA C509 - Resilient-Seated Gate Valves for Water Supply Service; American Water Works Association; (ANSI/AWWA C509/C509a).

K. AWWA C515 - Reduced-Wall, Resilient-Seated Gate Valves for Water Supply Service; American Water Works Association; (ANSI/AWWA C515).

L. AWWA C600 - Installation of Ductile-Iron Water Mains and Their Appurtenances; American Water Works Association; (ANSI/AWWA C600).

M. Use the latest issue of the above reference standards as of the date of the Project.

1.04 SUBMITTALS

A. See Section 01300 - Administrative Requirements, for submittal procedures.

B. Product Data: Provide data on pipe materials, pipe fittings, valves, controllers, sprinkler heads, and accessories.

C. Manufacturer's Certificate: Certify that products meet or exceed specified requirements.

D. Project Record Documents: Record actual locations of pipe lines, valves, controllers, sprinkler heads, connections, thrust restraints, and invert elevations. Identify and describe unexpected variations to subsoil conditions or discovery of uncharted utilities.

1.05 QUALITY ASSURANCE

A. Perform Work in accordance with City's requirements as described herein.

1.06 DELIVERY, STORAGE, AND HANDLING

A. Deliver and store valves and appurtenant items in shipping containers with labeling in place.

1.07 OPERATING AND MAINTENANCE DATA

A. Provide instructions covering full operation, care and maintenance of backflow preventer valves; and manufacturer's parts catalog. Information shall be included in the manual for operation and maintenance of the backflow preventer station.

B. Instruct Owner's designated maintenance personnel in the proper operation of the valves.

C. Submit 3 copies of written instructions recommending procedures to be established by the City Engineer for the maintenance of the valves from year to year.

1. Submit prior to expiration of required one year guarantee period.

2. Provide information in the manuals that include the following:
   a. written index near front of Manual listing location in the Manual of all emergency data regarding the installation;
   b. complete nomenclature of all replaceable parts, their part numbers, current cost, and name and address of the nearest vendor of replacement parts; and
   c. copy of all guarantees and warranties issued on the installation showing all dates of expiration.

PART 2 PRODUCTS

2.01 PIPE AND FITTINGS

A. Ductile Iron Pipe: AWWA C151:

1. Fittings: Ductile iron, standard thickness.

2. Joints:
   a. Push-On Joints: AWWA C111, push-on type with rubber gasket.
   b. Mechanical Joints: AWWA C111, mechanical joint type with gasket, bolts, and nuts.
   c. Flange Joints: AWWA C110, flange type with gasket, bolts, and nuts.

3. Jackets: AWWA C105 polyethylene jacket.

B. Steel Pipe: ASTM A 53:

1. Fittings: ASTM A 47.

2.03 VALVES

A. Valves: Manufacturer's name and pressure rating marked on valve body.

B. Gate Valves Up To 3 Inches:

1. Brass or Bronze body, non-rising stem, inside screw, single wedge or disc, IPS ends, and handwheel.

2. Product: Powell U.S. Bronze Gate Valves, or other valves acceptable to the City Engineer.

3. Substitutions: See Section 01600 - Product Requirements.

C. Gate Valves 3 Inches and Over:

1. AWWA C500, iron body, bronze trim, non-rising stem with square nut, single wedge, mechanical joint or flanged ends as indicated, and cast iron valve box.

2. AWWA C509, iron body, bronze trim, non-rising stem with square nut, single wedge, resilient seat, mechanical joint or flanged ends as indicated, and cast iron valve box.

3. AWWA C515, ductile iron, bronze trim, non-rising stem with square operating nut, single ductile iron wedge, mechanical joint or flanged ends as indicated, and cast iron valve box.

4. Product: Mueller Gate Valves or Resilient Seat Gate Valves, or American Flow Control Series 2500 Resilient Seat Gate Valves; with appropriate type Pacific States Cast Iron Valve Box, or accepted equal.

D. Ball Valves Up To 2 Inches:

1. Brass body, teflon coated brass ball, rubber seats and stem seals, Tee stem pre-drilled for control rod, compression inlet end, compression outlet, with control rod, valve key, and extension box.

E. Swing Check Valves From 2 Inches to 24 Inches:

1. AWWA C508, iron body, bronze trim, 45 degree swing disc, renewable disc and seat, flanged ends.

2. Product: Mueller Swing-Type Check Valve, or other valves acceptable to the City Engineer.

F. Butterfly Valves From 2 Inches to 24 Inches:

1. AWWA C504, iron body, bronze disc, resilient replacement seat, mechanical joint or flanged ends as indicated, manual worm gear operator, and cast iron valve box where required.

2. Underground manual operators shall be totally enclosed, factory grease packed and sealed, bronze worm gear operators with self-locking gearing; stops shall be provided to prevent over travel of valve disc.

3. Valve operator shall be geared to close valves slowly. Number of turns to close valve from full open position shall be: 32 turns for 10-inch and smaller valves, 52 turns for 12-inch thru 16-inch valves, and 76 turns for 18-inch thru 24-inch valves. Closing times for larger valves shall be accepted by the City Engineer.

4. Product: Mueller "Lineseal III" Butterfly Valve with appropriate type Pacific States Cast Iron Valve Box,

or other valves acceptable to the City Engineer.

G. Corporation Stops: shall be type for connecting to copper or polyethylene pipe; Mueller No. H- 15000, or other stops acceptable to the City Engineer, for up to 2-inch service line.

H. Air Release Valves: shall be combination air release valves; APCO Combination Air Release Valves, or other valves acceptable to the City Engineer, of size indicated on the drawings.

2.04 BACKFLOW PREVENTER

A. The backflow preventer shall be a reduced pressure type valve.

1. The backflow preventer shall be bronze for 6-inch and smaller valves, and epoxy coated ductile iron for 8-inch and larger valves.

2. The backflow preventer shall consist of two independently acting, spring-loaded check valves with a differential pressure relief valve located between the check valves.

3. The backflow preventer shall include inlet and outlet shutoff valves; and four test cocks, three on the backflow preventer valve bodies and one on the inlet shutoff valve.

B. The backflow preventers shall be of the appropriate size and type, as manufactured by Febco, Conbraco, or other valves acceptable to the City Engineer

2.05 MISCELLANEOUS METAL WORK

A. Miscellaneous metal work shall be provided as indicated on the drawings, as required to complete the Station.

2.06 PAINTING

A. All exposed pipe, valves, fittings, and metal work for the station shall be painted.

1. Painting shall consist of either:
   a. 4 coats of alkyd paint, Painting System II (Steel Structural Painting Council - Specification No. 2);
   b. 4 coats of phenolic paint, Painting System III (S. S. P. C. - Specification No 3).

2. Painting shall include surface preparation, pretreatment, primer coat, inter-mediate coats, and finish coat, as specified; with total dry film thickness not less than 4.0 mils.

3. Aluminum surfaces which will be in contact with concrete after erection shall be coated with bituminous mastic coating, SSPC-Paint 12, prior to erection.

2.07 MISCELLANEOUS ITEMS

A. Miscellaneous appurtenant items shall be as indicated on the drawings or as required to complete the station.

PART 3 EXECUTION

3.01 GENERAL

A. The Contractor shall furnish all labor, materials and equipment as required to construct the backflow preventer station, complete, as described herein, as shown on the drawings, and as directed by the City Engineer.

B. The backflow preventer station shall be constructed on the supply line to the sprinkling system, as shown, where the supply line is connected to a culinary water line.

C. All work shall be done according to local plumbing codes, and to manufacturer's written instructions and recommendations.

D. The Contractor shall test the station to assure proper operation.

3.02 EXAMINATION

A. Verify that design drawings conform to project conditions.

B. Verify that water line sizes and locations are as indicated on the drawings.

3.03 PREPARATION

A. Cut pipe ends square, ream pipe ends to full pipe diameter, remove burrs.

B. Remove scale and dirt on inside and outside of pipes before assembly.

C. Prepare pipe connections to equipment with flanges, mechanical joints or mechanical couplings.

3.04 EXCAVATING

A. Excavating for the backflow preventer station shall be done to ensure proper grades and alignment as shown on the drawings.

B. See Section 02112 and Sections 02115 and 02116 for additional requirements.

C. Hand trim excavation for accurate placement of pipe to elevations indicated.

D. Form and place concrete for pipe thrust restraints at each change of pipe direction. Place concrete to permit full access to pipe and pipe accessories. Provide required area of thrust restraint bearing on subsoil as indicated on the drawings.

E. Backfill around sides and to top of pipe zone with pipe bedding material, tamp in place and compact to required density.

F. Backfill trench from top of pipe zone to top of trench with trench backfill material, tamp in place and compact to required density.

3.05 INSTALLATION - PIPE

A. Establish elevations of buried piping to ensure not less than 2 feet of cover over secondary water lines and 4 feet over culinary water lines; or as indicated on the drawings and as directed by the City Engineer or City Inspector.

B. Install pipe to indicated elevation to within tolerance of one inches.

C. Install ductile iron piping and fittings to AWWA C600.

D. Install pipe lines to the line and grade indicated.

E. Install pipe to allow for expansion and contraction without stressing pipe or joints.

F. Slope water pipe and position drains at low points.

3.06 INSTALLATION - VALVES

A. Set valves level and plumb, as indicated.

B. Install adjustable pipe supports under each valve, as indicated and as directed.

C. Reduced pressure (RP) backflow preventer assemblies shall be installed as indicated on the drawings and as described herein.

1. The assemblies shall be installed in a horizontal position only.

2. The assemblies shall be maintained as an intact assembly.

3. The bottom of the RP assembly shall be minimum of 12-inches above the ground or floor level; and shall not be closer than 12 inches to any wall, ceiling or other encumbrance. Assemblies shall be readily accessible for testing, repair and maintenance.

4. RPZ assemblies shall NOT be installed in a pit.

5. The relief valve on the RP assembly shall not be directly connected to any waste disposal line, including sanitary sewer, storm drains or vents.

6. RP assemblies shall be protected from freezing and vandalism where applicable and as directed.

3.07 CONCRETE WORK

A. Construct a concrete slab for the station over a compacted gravel base, as shown on the drawing and as directed by the City Engineer or City Inspector.

B. Concrete work and reinforcing shall conform to the requirements of Section 03300 of these specifications.

3.08 MISCELLANEOUS ITEMS

A. Miscellaneous appurtenant items shall be furnished and installed as indicated on the drawings or as required to complete the station.

3.09 FIELD QUALITY CONTROL

A. Perform field inspection and testing in accordance with Section 01400.

B. Pressure test water piping to 200 PSI for 2 hours.

C. If tests indicate Work does not meet specified requirements, remove Work, replace and retest at no cost to City.

3.10 OPERATIONAL TESTING

A. Provide the City Engineer or City Inspector with seven days written notice before operational test of backflow preventer. Test must be completed by a certified backflow technician.

B. Test shall consist of the operation of the station for propose of checking operation and assuring of absence of leaks.

1. Repair pipe, fittings, valves, or connections which show evidence of leakage.

C. After all repairs or replacements have been made and accepted by the City Engineer or City Inspector, repeat the above required test.

END OF SECTION

SECTION 02621

GRAVEL SURFACING AND ROAD BASE

PART 1 GENERAL

1.01 SECTION INCLUDES

A. New gravel road base.

B. Restore gravel road base.

C. New gravel road surfacing.

D. Restore gravel road surfacing.

1.02 RELATED SECTIONS

A. Section 01300 - Administrative Requirements

B. Section 01400 - Quality Requirements

C. Section 02112 - Trenching for Pipe Work.

D. Section 02116 - Fill and Backfill: Compacted fill under base course.

E. Section 02641 - Bituminous Paving: Binder and finish asphalt courses.

1.03 REFERENCES

A. APWA Standard Specifications – 2012 Edition.

B. AASHTO T 11 - Materials Finer than 75-□m (No. 200) Sieve in Mineral Aggregates by Washing

C. AASHTO T 19 - Bulk Density (“Unit Weight”) and Voids in Aggregate

D. AASHTO T 27 - Sieve Analysis of Fine and Coarse Aggregates

E. AASHTO T 89 - Determining the Liquid Limit of Soils

F. AASHTO T 90 - Determining the Plastic Limit and Plasticity Index of Soils

G. AASHTO T 96 - Resistance to Degradation of Small-Sized Coarse Aggregate by Abrasion and Impact in the Los Angeles Machine

H. AASHTO T 193 – The California Bearing Ratio

I. AASHTO T 335 - Determining the Percent of Fracture in Coarse Aggregate

J. ASTM C 117 - Standard Test Method for Materials Finer than 75-µm (No. 200) Sieve in Mineral Aggregates by Washing

K. ASTM C 136 - Standard Test Method for Sieve Analysis of Fine and Coarse Aggregates

L. ASTM D 1557 - Standard Test Methods for Laboratory Compaction Characteristics of Soil Using Modified Effort

M. ASTM D 5195 - Standard Test Method for Density of Soil and Rock In-Place at Depths Below Surface by Nuclear Methods

1.04 SUBMITTALS

A. See Section 01300 - Administrative Requirements, for submittal procedures.

B. Submit source documentation and mix design as per Article 2.02

C. Compaction Density Test Reports per Article 1.05.

1.05 QUALITY CONTROL

A. See Section 01400 - Quality Requirements, for general requirements for field inspection and testing.

B. Perform quality control testing as per Table 1 unless otherwise directed by the City.

Table 1: Sampling and Testing Frequencies			
	Roadway	Flatwork/Driveways	Backfill
Gradation, ASTM C136[a]	Every 500 Tons	1 per day or Every 500 Tons[c]	
Density, ASTM D 5195[b]	Every 2500 SF	Every 150 LF or 2500 SF[c]	Every 150 LF
a. Report all sieves identified in Table 3. b. Density target of 95% of Modified Proctor, ASTM D 1557. c. Use whichever frequency is greater.			

C. Submit test and inspection reports to the City in accordance with Section 01400.

D. If tests indicate work does not meet specified requirements, remove work, replace and retest.

1.06 ACCEPTANCE

A. The City will perform acceptance decisions for all projects. At the City's discretion, the City may accept the lot based on results of the quality control test results defined in Article 1.05.

1) The City will reject the lot if the Contractor QC data is outside the limits of Table 1.
2) At the City's discretion, the City may perform acceptance testing in accordance with Table 1.

B. If tests indicate work does not meet specified requirements, remove work, replace and retest.

PART 2 PRODUCTS

2.01 MATERIALS

A. Untreated Base Course.

1. Material: Angular crushed stone, rock sand, gravel or recycled concrete.

a. Use material free of shale, clay, friable material, petroleum contamination and debris

Table 2. Aggregate Properties		
Dry Rodded Unit Weight	Not less than 75 lb/ft^3	AASHTO T 19
Liquid Limit/Plastic Index	Non-plastic	AASHTO T 89 AASHTO 90
Aggregate Wear	Not to exceed 50 percent	AASHTO T 96
Gradation	Table 3	AASHTO T 11 AASHTO T 27
CBR with a 10 lb surcharge measured at 0.20 inch penetration	70% Minimum	AASHTO T 193
Two Fractured Faces	50% Min	AASHTO T 335

2. Gradation:, Use gradation meeting Table 2, ASTM C 136 on a dry weight and percent passing basis..

Table 3.Target Gradation Limits		
Sieve Size	**Job Mix Gradation Target Band**	**Job Mix Gradation Tolerance**
1½ inch	100	
1 inch	90 - 100	±9.0
¾ inch	70 - 85	±9.0
½ inch	65 - 80	±9.0
⅜ inch	55 - 75	±9.0
No. 4	40 - 65	±7.0
No. 16	25 - 40	±5.0
No. 200	7 - 11	±3.0
NOTES a) It is assumed fine and course aggregate have the same bulk specific gravity. b) Percentage of fines passing No. 200 sieve determined by washing, ASTM C 117		

3. Recycled Asphalt Pavement (RAP)

   a. Limit RAP to 2% binder, by total weight of mix.
   b. Meet requirements of Table 2 with final blend.
   c. Mechanically blend RAP with virgin aggregates.

2.02 SOURCE QUALITY CONTROL

A. See Section 01400 - Quality Requirements, for general requirements for testing and analysis of aggregate materials.

B. If tests indicate materials do not meet specified requirements, change material and retest.

C. Provide materials of each type from same source throughout the Work.

D. Materials Sources: Submit name of imported materials source and Aggregate Composition Test Reports demonstrating compliance with Article 2.01.

   a. Submit to the City at least 10 working days before placement..

PART 3 EXECUTION

3.01 EXAMINATION

A. For new gravel road base and gravel surfacing, verify that sub-base has been compacted and accepted by the City Engineer or City Inspector, that gradients and elevations are correct, and that it is dry.

B. Verify that all areas of collapsible soil have been identified and properly prepared for road base.

   1. Submit report to the City summarizing investigative procedures and results prior to placement of base course.

C. For restoration of gravel road base and gravel surfacing, verify trenches and excavations have been backfilled, compacted and accepted by the City Engineer or City Inspector, that gradients and elevations are correct, and that they are dry.

3.02 PREPARATION

A. Correct irregularities in substrate gradient and elevation by scarifying, reshaping, and re-compacting.

B. Do not place aggregate on soft, muddy, or frozen surfaces.

C. Red head staking required for grade verification.

3.03 INSTALLATION

A. New gravel road base and surfacing.

1. Place gravel road base material over prepared substrate to provide total compacted thickness as indicated on plans or as directed by the City Inspector.

B. Restoration of gravel road base and surfacing.

1. Restore gravel road base, along with temporary gravel surfaces, within one day after trench backfill has been placed, compacted and accepted by the City Inspector.

2. Temporary gravel shall be maintained by blading, sprinkling, rolling, adding additional gravel as required, and appurtenant work to provide a safe, uniform surface over trench area satisfactory to the City Inspector. The temporary surface shall be restored at least every 7 days until the final surfacing is to be placed; and sprinkled with water at least once each day, including weekends and holidays.

3. When final surfacing is to be placed, remove the temporary gravel to the bottom of the surface to be restored. After removing temporary gravel, the sub-base shall be graded and rolled to provide a compact, smooth base for placement of final surfacing.

4. Place gravel road base material over prepared substrate to provide total compacted thickness equal to the adjacent road base, but not less than the thickness as indicated.

C. Place material at near optimum moisture.

D. Level and contour surfaces to elevations and gradients indicated.

E. Add water to assist compaction. If excess water is apparent, remove aggregate and aerate to reduce moisture content.

F. Use mechanical tamping equipment in areas inaccessible to compaction equipment.

G. Provide red head staking and string test for finished grading verification.

H. When aggregate materials need to be stored on site, locate stockpiles where indicated.

1. Separate differing materials with dividers or stockpile separately to prevent intermixing.
2. Prevent contamination.
3. Protect stockpiles from erosion and deterioration of materials.
4. Aggregate stockpiles should be placed so that the aggregate gradation is maintained and segregation of larger and smaller aggregate does not happen.

I. Verify that survey bench marks and intended elevations for the Work are as indicated.

3.04 TOLERANCES

A. Flatness: Maximum variation of 1/4 inch measured with 10 foot straight edge.

B. Scheduled Compacted Thickness: Within 1/4 inch.

C. Variation from Design Elevation: Within 1/2 inch.

3.05 CEASE PRODUCTION

A. Cease production when any two out of three consecutive tests meet one of the following criteria:

1. Gradation does not meet limits of Table 3
2. Density does not meet requirements of Table 1 after reworking and retesting.

B. Submit a corrective action plan to the City Engineer before production continues indicating the changes in production procedures that will be implemented to correct the deficiencies.

3.06 CLEAN-UP

A. Remove unused stockpiled materials; leave area in a clean and neat condition. Grade stockpile area to prevent standing surface water.

B. All disturbed areas shall be restored with native grasses to match adjacent areas, conforming to the City Standards and as acceptable to the City Engineer. These areas shall be seeded with material conforming to adjacent materials, as acceptable. Restored area shall achieve 70% plan coverage prior to acceptance.

END OF SECTION

SECTION 02631
GEOGRID

PART 1 GENERAL

1.1 SECTION INCLUDES

A. Geogrid for use in roadway and roadway embankment applications.

1.2 RELATED SECTIONS (Not Used)

1.3 REFERENCES

A. American Association of State Highway and Transportation Officials (AASHTO)

1. AASHTO Recommended Practice for Geosynthetic Reinforcement of the Aggregate Base Course of Flexible Pavement Structures, AASHTO PP46-01, April 2001 Interim Edition of the AASHTO Provisional Standards.
2. Standard Specification for Highway Bridges (1997 Interim)
3. AASHTO Guide for Design of Pavement Structures (1993)
4. AASHTO Guide for Design of Pavement Structures (1993)

B. American Society for Testing and Materials (ASTM)

1. D5732-95 - Standard Test Method for Stiffness of Fabrics
2. D6637-01- Standard Test Method for Determining Tensile Properties of Geogrids by the Single or Multi-rib Tensile Method
3. D4354-96 - Practice for Sampling of Geosynthetics for Testing
4. D4759-92 - Practice for Determining the Specification Conformance of Geosynthetics
5. D5818-95 - Practice for Obtaining Samples of Geosynthetics from a Test Section for Assessment of Installation Damage

C. Geosynthetic Research Institute (GRI)

1. GRI-GG2-87 - Standard Test Method for Geogrid Junction Strength

D. U.S. Department of Transportation – Federal Aviation Administration (FAA)

1. Specification for Geogrid Reinforced Base Courses, Engineering Brief No. 49 (1994).

E. U.S. Environmental Protection Agency (U.S. EPA)

1. EPA 9090 - Compatibility Test for Wastes and Membrane Liners

F. U.S. Army Corps of Engineers (U.S. COE)

1. Draft specification for Grid Aperture Stability by In-Plane Rotation
2. CW-02215 Determination of Percent Open Area.

G. American Society of Civil Engineers (ASCE)

1. Giroud, J.P., and Han, J. (2004). “Design method for geogrid reinforced unpaved roads. Part I – Development of design method.” Journal of Geotechnical and Geoenvironmental Engineering, 130 (8), 775-786.
2. Giroud, J.P., and Han, J. (2004). “Design method for geogrid reinforced unpaved roads. Part II – Calibration and applications.” Journal of Geotechnical and Geoenvironmental Engineering, 130 (8), 787-797. City Road Repair and Crack Seal Program 2013 02072 - 2 GEOGRID

H. Dr. Thomas C. Kinney, P.E.

1. Determining the Aperture Stability Modulus of a Geogrid (2001).

1.4 DEFINITIONS

A. Geogrid - A biaxial polymeric grid formed by a regular network of integrally connected tensile elements with apertures of sufficient size to allow interlocking with surrounding soil, rock, or earth to function primarily as reinforcement.

B. Multi-Layer Geogrid - A geogrid product consisting of multiple layers of grid which are not integrally connected throughout.

C. Woven Geogrid – A geogrid product formed by weaving discrete strips of polymer into a network.

D. Welded Strip geogrid – A geogrid product formed by heat bonding (welding) discrete strips of polymer into a regular network.

E. Minimum Average Roll Value (MARV) - Value based on testing and determined in accordance with ASTM D4759-92.

F. Traffic Benefit Ratio (TBR) (also known as Traffic Improvement Factor or TIF) - A ratio comparing the performance of a pavement cross-section with a geogrid-reinforced base course to a similar cross-section without geogrid reinforcement, based on the number of cycles to failure, with failure defined as a selected depth of rut.

G. True Initial Modulus in Use - The ratio of tensile strength to corresponding zero strain. The tensile strength is measured via ASTM D6637 at a strain rate of 10 percent per minute. Values shown are MARVs. For multi-layer geogrid products, rib tensile testing shall be performed on the multi-layer configurations, as prescribed by ASTM D6637.

H. Junction Strength - Breaking tensile strength of junctions when tested in accordance with GRI-GG2 as modified by AASHTO Standard Specification for Highway Bridges, 1997 Interim, using a single rib having the greater of 3 junctions or 8 inches and tested at a strain rate of 10 percent per minute based on this gauge length. Values shown are minimum average roll values. For multi-layer geogrid products, junction strength testing shall be performed across junctions from each layer of grid individually, and results shall not be assumed as additive from single layers to multiple layers.

I. Flexural Stiffness (also known as Flexural Rigidity) - Resistance to bending force measured via ASTM D5732- 95, using specimens of width two ribs wide, with transverse ribs cut flush with exterior edges of longitudinal ribs (as a “ladder”), and length sufficiently long to enable measurement of the overhang dimension. The overall Flexural Stiffness is calculated as the square root of the product of the MD and XMD Flexural Stiffness values. For multi-layer geogrid products, flexural stiffness testing shall be performed directly on the multi-layer configuration without using any connecting elements other than those used continuously throughout the actual product, and results shall not be assumed as additive from testing performed on a single layer of the multi- layer product.

J. Aperture Stability Modulus (also known as Torsional Rigidity or Torsional Stiffness) - Resistance to in-plane rotational movement measured by applying a 20 kg-cm (2 m-N) moment to the central junction of a 9-inch by 9-inch specimen restrained at its perimeter. Values shown are MARVs. For multi-layer geogrid products, torsional stiffness testing shall be performed on each layer of grid individually, and results shall not be assumed as additive from single layers to multiple layers. City Road Repair and Crack Seal Program 2013 02072 - 3 GEOGRID

K. Subgrade Improvement – Placement of a geogrid immediately over a soft subgrade soil in order to improve the bearing capacity and mitigate deformation of the subgrade soil. The goal of this application may be to reduce undercut requirements, improve construction efficiency, reduce the amount of aggregate subbase/base material required, provide a stiff working platform for pavement construction, or combination of these.

L. Base Reinforcement - Placement of a geogrid beneath or within the aggregate base course of a flexible pavement system to improve the stiffness of the system. The goal of this application may be to reduce the amount of aggregate base material required (reducing initial cost), increase the life of the pavement (reduce life-cycle cost), or a combination of the two.

1.5 SUBMITTALS

A. Submit geogrid product sample approximately 4 inches by 7 inches or larger. Refer to ASTM D 4354.

B. Submit geogrid product data sheet and certification from the Manufacturer that the geogrid product supplied meets the requirements of this Section.

C. Submit Manufacturer's installation instructions and general recommendations.

D. Submit the following to the Engineer at least 2 days prior to bid letting for alternate geogrid materials that do not meet the requirements of this Section. The Engineer will respond with a written justification to allow or disallow the requested alternate Geogrid.

1. Full-scale laboratory and in-ground testing of pavement structures reinforced with the specific geogrid. Testing must be conducted in full-scale at an Accelerated Pavement Testing Facility in the United States. Testing must quantify the structural benefit of the submitted product. Full scale testing must be included in the submittal. The geogrid submitted must meet or exceed that of the design geogrid.
2. A list of 5 comparable projects that are similar in terms of size and application, are located in the United States, and where the results of using the specific alternate geogrid material can be verified after a minimum of five years of service life.
3. A sample 4 x 7 inches or larger.
4. Recommended installation instructions.
5. Additional information as requested by the Engineer to fully evaluate the product.

1.6 QUALITY ASSURANCE

A. Manufacturer shall have at least five years continuous experience in manufacturing polypropylene geogrid or experience manufacturing at least 10,000,000 square feet of polypropylene geogrid.

B. Geogrid installer shall be manufacturer's representative or trained to install manufacturer's product.

C. Pre-Construction Conference - Prior to the installation of the geogrid, the Contractor shall arrange a meeting at the site with the geogrid material supplier and, where applicable, the geogrid installer. The Owner and the Engineer shall be notified at least 3 days in advance of the time of the meeting. A representative of the geogrid supplier shall be available on an "as needed" basis during construction.

1.7 ACCEPTANCE

A. Owner rejects geogrid at installation if it has defects, rips, holes, flaws, deterioration, or damage incurred during manufacture, transport, handling or storage.

1.8 DELIVERY, STORAGE, AND HANDLING

A. Deliver geogrid to site in roles. Each roll shall have identification tag indicating manufacturer and product type. Ship per manufacturer's recommendations.

B. Storage and Protection

1. Prevent excessive mud, wet concrete, epoxy, or other deleterious materials from coming in contact with and affixing to the geogrid materials.
2. Store at temperatures above -20 degrees F (-29 degrees C).
3. Rolled materials may be laid flat or stood on end.
4. Geogrid materials should not be left directly exposed to sunlight for a period longer than recommended by the manufacturer.

1.9 PROJECT CONDITIONS

A. Place geogrid when ambient temperature is between 40 degrees Fahrenheit and 95 degrees Fahrenheit.

B. Do not place geogrid during any precipitation; in presence of moisture such as fog, rain, dew; or excessive winds.

1.10 WARRANTY

A. Provide one year written warranty for materials and workmanship for geogrid.

PART 2 PRODUCTS

2.1 MATERIALS

A. Geogrid General–

1. Synthetic fiber net at least 85-percent by weight of polypropylene, polyethylene, or polyester.
2. Resistant to chemical attack, rot and mildew.
3. No tears or defects that will adversely alter properties of product.

B. Roadway Aggregate Geogrid - Base Reinforcement

1. Geogrids are a regular network of integrally connected polymer tensile elements constructed in a single layer with aperture geometry sufficient to permit significant mechanical interlock with the surrounding soil or rock. Geogrids must also be dimensionally stable and able to retain their geometry under manufacture, transport and installation.
2. Geogrids shall have the following properties:

BX GEOGRID PROPERTY VALUES

Geogrid Properties	Test Method	Type 1		Type 2	
		Machine Direction MD	Perpendicular to Machine Direction CMD	Machine Direction MD	Perpendicular to Machine Direction CMD
Type of Geogrid		Punched and Drawn	Punched and Drawn	Punched and Drawn	Punched and Drawn
Rib Shape	Observation	Rectangular or Square	Rectangular or Square	Rectangular or Square	Rectangular or Square
Rib Thickness	Nominal Dimensions	Minimum - 0.05 in	Minimum – 0.05 in	Minimum - 0.07 in	Minimum – 0.07 in
Nominal Aperture Size	I.D. Callipered	1.0 in to 1.5 in	1.0 in to 1.5 in	1.0 in to 1.5 in	1.0 in to 1.5 in
Flexural Stiffness	ASTM D-5732-95b	Min. 750,000 mg-cm	NA	Min. 2,000,000 mg-cm	NA
Minimum True Initial Modulus in Use	ASTM 6637-01a	Minimum – 27,420 lb/ft	Minimum – 44,550 lb/ft	Minimum – 27,420 lb/ft	Minimum – 44,550 lb/ft
Junction Efficiency	GRI-GG2-87	93%	93%	93%	93%
Aperture Stability Modulus at 20 cm-kg	Kinney -01	0.65 m-N/deg	NA	0.75 m-N/deg	NA
Resistance to Long Term Degradation	EPA 9090 Immersion Testing	100%	100%	100%	100%

a) Resistance to elongation when initially subjected to load measured via ASTM 6637 without deforming test materials under load before measuring such resistance or employing “secant” or “offset” tangent methods of measurement.

b) Resistance to bending force measured via ASTM D-5732-95, using specimens of width two ribs wide, with transverse ribs cut flush with exterior edges of longitudinal ribs (as a “ladder”), and of length sufficiently long to enable measurement of the overhang dimension. The overall Flexural Stiffness is calculated as the square root of the product of machine-and cross-machine-direction Flexural Stiffness values.

TX GEOGRID PROPERTY VALUES

Geogrid Properties	Test Method	Type 1				Type 2			
		Longitudinal	Diagonal	Transverse	General	Longitudinal	Diagonal	Transverse	General
Type of Geogrid					Punched and Drawn				Punched and Drawn
Rib pitch	Nominal Dimensions	1.6 in	1.6 in			1.6 in	1.6 in		
Mid-rib depth	Nominal Dimensions		0.05 in	0.05 in			0.07 in	0.06 in	
Mid-rib width	Nominal Dimensions		0.04 in	0.04 in			0.04 in	0.05 in	
Rib Shape	Observation				Rectangular				Rectangular
Aperture shape	Observation				Triangular				Triangular
Junction Efficiencya	GRI-GG2-87				93%				93%
Radial Stiffnessb	ASTM 6637-01				15,430 lb/ft @ 0.5% strain				29,500 lb/ft @ 0.5% strain
Resistance to Long Term Degradationc	EPA 9090 Immersion Testing				100%				100%

a) Load transfer capability determined in accordance with GRI-GG2-87 and expressed as a percentage of ultimate tensile strength.
b) Determined from tensile stiffness measured in any in-plane axis from testing in accordance with ASTM D6637-01.
c) Resistance to loss of load capacity or structural integrity when subjected to chemically aggressive environments in accordance with EPA 9090.

3. Using multiple layers of geogrid to meet the requirements set forth in the preceding table will not be accepted.

4. Acceptance Requirements – Base the actual minimum average roll values furnished by the manufacturer on representative test results from the manufacturing plant which produced the geogrid. Meet or exceed each of the specified minimum values. Clearly label all geogrids as being part of the same production run certified as meeting all applicable requirements.

C. Acceptable Manufacturers:
1. Structural Geogrid, TX5 or BX1500, Tensar Earth Technologies, (801) 789-5407 or (800) 836-7271.
2. Or-equal, approved by Engineer prior to bid letting.

2.2 SOURCE QUALITY CONTROL PREPARATION

A. Manufacturer shall conduct sufficient inspections and testing during production to verify product meets material properties specified.

PART 3 EXECUTION

3.1 PREPARATION

A. Subgrade shall be smooth, free of all foreign and organic material, sharp objects, or debris of any kind.

B. Subgrade shall have no sharp changes or abrupt breaks in grade.

C. Subgrade shall not have standing water or excessive moisture.

3.2 INSTALLATION

A. Install geogrid in accordance with manufacturer's instructions.

B. Layout geogrid on prepared subgrade or Granular Borrow. Place temporary anchoring such as Granular Borrow or Untreated Base Course material, pins, or staples, or other acceptable devices on geogrid as necessary to prevent movement.

C. Provide 1-foot minimum overlap at edges and ends of rolls.

D. Place overlap shingle style in direction of fill advancement to ensure stability during installation.

E. Place and compact fill in accordance with manufacturer's recommendations and in accordance with Section 32 11 15 or 32 11 23 as applicable.

3.3 PROTECTION

A. Protect subgrade from damage while unrolling geogrid.

B. Protect geogrid from damage from equipment, tools, and personnel working on geogrid.

C. Protect geogrid from damage during backfill operations.

END OF SECTION

SECTION □□□□□

BITUMINOUS PA□ING

PART □ GENERAL

□□□□ SECTION INCLUDES

A. Bituminous paving for new surfaces.

B. Bituminous paving for restoration of bituminous surfaces.

C. Bituminous paving for overlay.

□□□□ RELATED SECTIONS

A. Section 1300 – Administrative Requirements

B. Section 01400 - Quality Requirements.

C. Section 02100 – Roadway and General Earthwork.

D. Section 02116 - Fill and Backfill: Compacted subgrade for paving.

E. Section 02621-Gravel Road Base Course: Gravel road base course.

□□□□ RE□ERENCES

A. AASHTO M 303 – Lime for Asphalt Mixtures

B. AASHTO R 35 – Superpave Volumetric Design for Hot-Mix Asphalt

C. AASHTO T 19 – Bulk Density (“Unit Weight”) and Voids in Aggregate

D. AASHTO T 89 – Determining the Liquid Limit of Soils

E. AASHTO T 90 – Determining the Plastic Limit and Plasticity Index of Soils

F. AASHTO T 96 – Resistance to Degradation of Small-Size Coarse Aggregate by Abrasion and Impact in the Los Angeles Machine

G. AASHTO T 104 – Soundness of Aggregate by Use of Sodium Sulfate or Magnesium Sulfate

H. AASHTO T 176 – Plastic Fines in Graded Aggregates and Soils by Use of the Sand Equivalent Test

I. AASHTO T 195 – Determining Degree of Particle Coating of Asphalt Mixtures

J. AASHTO T 209 – Theoretical Maximum Specific Gravity and Density Of Bituminous Paving Mixtures

K. AASHTO T 255 – Total Evaporable Moisture Content of Aggregate by Drying

L. AASHTO T 304 – Uncompacted Void Content of Fine Aggregate

M. AASHTO T 324 – Hamburg Wheel-Track Testing of Compacted Hot-Mix Asphalt (HMA)

N. AASHTO T 335 – Determining the Percentage of Fracture in Coarse Aggregate

O. APWA Standard Specifications – 2012 Edition

P. Asphalt Institute Manual SP-2: Superpave Mix Design

Q. ASTM D 4791 – Standard Test Method for Flat Particles, Elongated Particles, or Flat and Elongated Particles in Coarse Aggregate

SUBMITTALS

A. See Section 01300 - Administrative Requirements, for submittal procedures

B. Volumetric Mix Design as per Article 2.02 D.

C. Verification of current HMA Mix Plant certification as per Article 1.05 B.

D. Verification of Laboratory Accreditation and Technician Certification as per Article 1.05 D.

E. Daily Plant Production records and Quality Control Data as per Article 1.05 E and Article 1.06 A.

QUALITY ASSURANCE

A. Perform Mix Design and Quality Control work in accordance with Section 32 12 05 of the APWA Standard Specifications unless otherwise directed within this specification.

B. HMA Mixing Plant: Use UDOT 514 QMP certified Asphalt Mix Plant.

1. Submit plant certification and lab accreditation documentation with mix design.

C. Obtain materials from same source throughout or submit new mix design.

D. Independent Laboratory: Use AMRL certified laboratory and WAQTC/UDOT TTQP certified technicians.

1. Submit lab accreditation documentation with mix design
2. Submit.field technician certification documentation at least 5 working days before paving

E. Submit daily plant production records and Quality Control data within 1 working day after completion of each day of paving.

QUALITY CONTROL AND QUALITY DEMONSTRATION

A. Quality Control is performed by Contractor or his representative. Perform QC sampling and testing of material in accordance with Section 01400 - Quality Requirements, for general requirements for quality control.

1. Submit QC data and plant daily production summary to the City prior to the start of paving subsequent lots.
   a. Include component percentages and totalized quantities for the individual mix run for the following:
      1) Binder
      2) All aggregates
      3) Anti-Strip
      4) Water

B. A lot equals the number of tons of HMA placed during each production day.

C. Gradation and asphalt binder content

1. Gradation and Binder Content samples may be truck samples from the plant or windrow samples.
2. Evaluate a lot on the average of all test results for the lot.
   a. Take one gradation and binder content sample for each 500 tons, or portion thereof.
3. Perform and report gradation and binder content testing
4. Lot is acceptable for Gradation/Asphalt Binder Content when test results for gradation and binder content are within the limits of Table 1.

D. Mix Volumetrics

1. Take one volumetric verification sample per 500 tons of mix, or fraction thereof.
   a. Determine mix maximum specific gravity.
   b. Compact in accordance with mix design parameters.
2. Calculate and report Air Void Content, VMA, VFA and Dust to Binder Ratio for each sample taken.

E. Density and Thickness Quality Demonstration

1. Demonstrate lot density and thickness based on the test results of 4 random density/thickness cores per lot.
   a. Random location is based on use of random number table, generator or other objective measure to establish both station and off-set for each sample.
   b. For lift thicknesses less than 2”,
      1) Density is based on documented summary of results of 10 random nuclear density tests using core-correlated gauge specific to this mix.
      2) Thickness is based on documented summary of 10 random thickness checks with a depth probe during placement and any corrective actions taken.
2. Contractor obtains cores from random locations within two days after the pavement is placed.
   a. Move transversely to a point 1 ft from the edge of the pavement for In-place density if the random location for coring falls within 1 ft of the edge of the overall pavement section (outer part of shoulders).
   c. Fill core holes with HMA or high AC content cold mix and compact.
   d. Begin testing the cores within 24 hours for density acceptance.
3. Lot is acceptable for density when test results are within the limits of Table 1.
4. Lot is acceptable for thickness when:
   a. The average thickness of the lot is not more than ¼ inch less than the total thickness specified.
   b. No individual core shows a deficient thickness of more than ⅜ inch.
5. Deficient Thickness: Place additional material where lots are deficient in thickness.
   a. Use a minimum compacted lift of 3 times the nominal maximum aggregate size.

Table 1

C r A L P r P	
P r r	**A L**
½ inch sieve for ¾ inch HMA ⅜ inch sieve for ½ inch HMA	Lot Average: Target Value ± 3.0% Individual Test: Target Value ± 6.0%
No. 8 sieve	Lot Average: Target Value ± 2.5% Individual Test: Target Value ± 5.0%
No. 50 sieve	Lot Average: Target Value ± 2.0% Individual Test: Target Value ± 3.0%
No. 200 sieve	Lot Average: Target Value ± 1.0% Individual Test: Target Value ± 2.0%
Asphalt Binder Content	Lot Average: Target Value ± 0.2% Individual Test: Target Value ± 0.4%
Dust to Binder Ratio (by weight)	Individual Test < 1.4
Density	Lot Average:

Target Value: 93.5 percent of Mix Design Maximum Specific Gravity (Rice) *(for design overlay thickness < 1.5" target is 92.5% of Rice)*	Target Value ± 2.0% Individual Test: Target Value ± 4.0%

ACCEPTANCE

A. The City will perform acceptance decisions for all projects.

1. Project Definitions
   a. Capital Projects: Projects where City has contracted directly with the General Contractor for construction of the roadway.
   b. Non-Capital Projects: All other projects, including Development, Permit and Utility work.

2. Acceptance Practices
   a. For Capital projects, the City, or its representative, will perform testing for gradation, asphalt binder content, density, thickness and smoothness on samples taken by the contractor in the presence of the City or its representative.
   b. For the Non-Capital projects, at the City's discretion, the city may accept the lot based on results of the quality control test results and plant production records defined in Article 1.06.
      1) The City will reject the lot if the Contractor QC data is outside the limits of Table 1.
      2) At the City's discretion, the City may perform acceptance testing on non-Capital projects in accordance with Articles 1.07B through 1.07E, Article 1.07H, and Article 1.07I. The City will reject the lot if the Acceptance data is outside the limits of Table 1, if calculated PT is less than 80%, or if True-Elevation tolerance of Article 1.07H is not met.

B. A lot equals the number of tons of HMA placed during each production day.

C. Gradation and asphalt binder content

1. The City Engineer will evaluate a lot on the test results of four samples with the following exceptions:
   a. Compute disincentive using the test results from three samples if only three samples can be taken for the production day.
   b. Add the lot to the next day's production if three random samples cannot be taken.
   c. Add the lot to the previous day's production for the final day's production if three random samples cannot be taken.
   d. The lot may be increased to include up to three production days when agreed upon in advance by both the Contractor and City Engineer when less than 900 tons are anticipated per production day.

2. Take samples at locations directed by the City Engineer or their representative. The City Engineer will inform the Contractor of the time and place of sampling not more than 15 minutes before the sampling.
   a. The City takes immediate possession of the sample(s).

D. Mix Volumetrics

1. In conjunction with the gradation and binder content samples, the City will calculate and report Air Void Content, VMA, VFA and Dust to Binder Ratio.
   a. Laboratory compaction in accordance with mix design parameters.
   b. Calculations will be based on sample maximum specific gravity.

E. Density and Thickness

1. Density Sampling and Testing
   a. For paving areas not containing paving Fabric: Contractor obtains cores within two days after the pavement is placed.

      1) The City Engineer will mark coring location for in-place density and joint density cores.
      2) Move transversely to a point 1 foot from the edge of the pavement for In-place density if the random location for coring falls within 1 foot of the edge of the overall pavement section (outer

part of shoulders).
3) Fill core holes with HMA or high AC content cold mix and compact.
4) The City Engineer will witness the coring operation, take possession of the cores immediately, and begin testing the cores within 24 hours for density acceptance.

b. For paving areas with paving Fabric, the owner will perform density testing with a core-correlated nuclear gauge instead of cores.

2. Density Requirements

a. The limits for in-place density are in accordance with Table 3.
b. Use the average of the Maximum Specific Gravity tests for each lot.

3. Thickness Requirements

a. The City will accept a lot for thickness when:
1) The average thickness of all sub-lots is not more than 1/4-inch greater, nor 1/4-inch less than the total thickness specified.
2) No individual sub-lot shows a deficient thickness of more than 3/8-inch.
b. Excess Thickness: The City Engineer may allow excess thickness to remain in place or may order its removal.
1) For excess material left in place on unit price contracts, the City will not pay for any material above the upper thickness tolerance.
c. Deficient Thickness: Place additional material where lots or sub-lots are deficient in thickness.
1) Minimum compacted lift is 3 times the nominal maximum aggregate size.
d. Thickness tolerances established above do not apply to leveling courses. Check final surfaces in stage construction.
e. Thickness acceptance for thin lift projects of 1.5 inches or less consists of checking thickness regularly with a depth probe during placement and taking corrective action as necessary.

F. For Capital Projects, the City will apply Disincentives for Gradation/Asphalt Content and In-Place Density. The City Engineer will compute Disincentive for each lot.

1. Compute disincentive for Gradation/Asphalt Binder and In-place Density according to Table 2.
2. Base the disincentive on Percent within Limit (PT) computation using Tables 3, 4, and 5.
a. Evaluate with the appropriate number of tests “n” in Table 4.
3. Use lowest single value combined for gradation (each of the sieves) and asphalt binder content for calculating the gradation/asphalt binder content disincentive.
4. Use Table 5 to determine PT for in-place density.

Table 2

Disincentive for Gradation, Asphalt Binder Content, and Density	
PT Based on Min. Four Samples	Disincentive (Dollars/Ton)
> 88	0.00
84-87	-0.26
80-83	-0.60
76-79	-0.93
72-75	-1.27
68-71	-1.60
64-67	-1.93
60-63	-2.27
<60	Reject

Table 3

Upper and Lower Limit Determination	
Parameter	UL and LL
½ inch sieve for ¾ inch HMA	Target Value ± 6.0%

⅜ inch sieve for ½ inch HMA	
No. 8 sieve	Target Value ± 5.0%
No.50 sieve	Target Value ± 3.0%
No. 200 sieve	Target Value ± 2.0%
Asphalt Binder Content	Target Value ± 0.35%
Density	Lower Limit: Target Value - 2.0% Upper Limit: Target Value + 3.0%

Table 4

Quality Index Values for Estimating Percent Within Limits										
PU/PL	n=3	n=4	n=5	n=6	n=7	N=8	n=10	n=12	n=15	n=20
100	1.16	1.50	1.75	1.91	2.06	2.15	2.29	2.35	2.47	2.56
99	1.16	1.47	1.68	1.79	1.89	1.95	2.04	2.09	2.14	2.19
98	1.15	1.44	1.61	1.70	1.77	1.80	1.86	1.89	1.93	1.97
97	1.15	1.41	1.55	1.62	1.67	1.69	1.74	1.77	1.80	1.82
96	1.15	1.38	1.49	1.55	1.59	1.61	1.64	1.66	1.69	1.70
95	1.14	1.35	1.45	1.49	1.52	1.54	1.56	1.57	1.59	1.61
94	1.13	1.32	1.40	1.44	1.46	1.47	1.49	1.50	1.51	1.53
93	1.12	1.29	1.36	1.38	1.40	1.41	1.43	1.43	1.44	1.46
92	1.11	1.26	1.31	1.33	1.35	1.36	1.37	1.37	1.38	1.39
91	1.10	1.23	1.27	1.29	1.30	1.31	1.32	1.32	1.32	1.33
90	1.09	1.20	1.23	1.24	1.25	1.25	1.26	1.26	1.27	1.27
89	1.08	1.17	1.20	1.21	1.21	1.21	1.21	1.21	1.22	1.22
88	1.07	1.14	1.16	1.17	1.17	1.17	1.17	1.17	1.17	1.17
87	1.06	1.11	1.12.	1.12	1.12	1.13	1.13	1.13	1.13	1.13
86	1.05	1.08	1.08	1.08	1.08	1.08	1.08	1.08	1.08	1.08
85	1.03	1.05	1.05	1.05	1.05	1.04	1.04	1.04	1.04	1.04
84	1.02	1.02	1.02	1.01	1.01	1.01	1.00	1.00	1.00	1.00
83	1.00	0.99	0.98	0.97	0.97	0.96	0.96	0.96	0.96	0.96
82	0.98	0.96	0.95	0.94	0.94	0.93	0.93	0.92	0.92	0.92
81	0.96	0.93	0.92	0.91	0.90	0.90	0.89	0.89	0.89	0.88
80	0.94	0.90	0.88	0.87	0.86	0.86	0.85	0.85	0.85	0.85
79	0.92	0.87	0.85	0.84	0.83	0.83	0.82	0.82	0.82	0.81
78	0.89	0.84	0.82	0.81	0.80	0.79	0.79	0.78	0.78	0.78
77	0.87	0.81	0.79	.0.78	0.77	0.76	0.76	0.75	0.75	0.75
76	0.84	0.78	0.76	0.75	0.74	0.73	0.72	0.72	0.72	0.72
75	0.82	0.75	0.73	0.72	0.71	0.70	0.69	0.69	0.69	0.68
74	0.79	0.72	0.70	0.68	0.67	0.67	0.66	0.66	0.66	0.65
73	0.77	0.69	0.67	0.65	0.64	0.64	0.62	0.62	0.62	0.62
72	0.74	0.66	0.64	0.62	0.61	0.61	0.60	0.59	0.59	0.59
71	0.71	0.63	0.60	0.59	0.58	0.58	0.57	0.56	0.56	0.56
70	0.68	0.60	0.58	0.56	0.55	0.55	0.54	0.54	0.54	0.53
69	0.65	0.57	0.55	0.54	0.53	0.52	0.51	0.51	0.51	0.50
68	0.62	0.54	0.52	0.51	0.50	0.50	0.48	0.48	0.48	0.48
67	0.59	0.51	0.49	0.48	0.47	0.47	0.46	0.45	0.45	0.45
66	0.56	0.48	0.46	0.45	0.44	0.44	0.43	0.42	0.42	0.42
65	0.53	0.45	0.43	0.42	0.41	0.41	0.40	0.40	0.40	0.39
64	0.49	0.42	0.40	0.39	0.38	0.38	0.37	0.37	0.37	0.37
63	0.46	0.39	0.37	0.36	0.35	0.35	0.35	0.34	0.34	0.34
62	0.43	0.36	0.34	0.33	0.33	0.33	0.32	0.31	0.31	0.31
61	0.39	0.33	0.31	0.30	0.30	0.30	0.29	0.29	0.29	0.28
60	0.36	0.30	0.28	0.27	0.26	0.26	0.25	0.25	0.25	0.25
<60	≤ 0.35	≤ 0.29	≤ 0.27	≤ 0.26	≤ 0.25	≤ 0.25	≤ 0.24	≤ 0.24	≤ 0.24	≤ 0.24

Enter table in the appropriate "number of tests" column and round down to the nearest value.

Table 5

Definitions, Abbreviations, and Formulas for Acceptance	
Term	Explanation
Target Value (TV)	The target values for gradation and asphalt binder content are given in the Contractor's volumetric mix design. See this Section article 1.4 for density target values.
Average (AVE)	The sum of the lot's test results for a measured characteristic divided by the number of test results–the arithmetic mean.
Sample Standard Deviations	The square root of the value formed by summing the squared difference between the individual test results of a measured characteristic and AVE, divided by the number of test results minus one.
Upper Limit (UL)	The value above the TV of each measured characteristic that defines the upper limit of acceptable production. (Table 3)
Lower Limit (LL)	The value below the TV of each measured characteristic that defines the lower limit of acceptable production (Table 3)
Upper Quality Index (QU)	QU = (UL - AVE)/s
Lower Quality Index (QL)	QL = (AVE - LL)/s
Percentage of Lot Within UL (PU)	Determined by entering Table 4 with QU.
Percentage of Lot Within LL (PL)	Determined by entering Table 4 with QL.
Total Percentage of Lot Within UL and LL (PT)	PT = (PU + PL) – 100
Disincentive	Determined by entering Table 2 with PT or PL.

All values for AVE, s, QU, and QL will be calculated to at least four decimal place accuracy, which will be carried through all further calculations. Rounding to lower accuracy is not allowed.

G. The City will reject the lot if the PT for any individual measurement is less than 60 percent.

1. The City Engineer may accept a reject lot based on a City directed Engineering analysis.
   a. A maximum $25 per ton price reduction will be assessed. The City may reduce the price reduction based on the results of the engineering analysis.

H Variation from True Elevation: Construct final riding surface within 1/2 inch of plan elevation.

I. Smoothness

1. Limit all longitudinal and transverse pavement deviations to less than ⅛ inch from the lower edge of a 10-foot straightedge.
2. Meet smoothness requirements of Table 6.

Table 6 – Roughness Tolerances

Speed Mph	Profile Roughness (Inches/Mile), Maximum		Profile Deviation Inches/25 feet Maximum
	IRI	PI	
Residential	–	–	0.4
0 to 30	120	50	0.4
31 to 45	90	35	0.4
45 +	70	21	0.3

NOTES
(a) IRI (International Roughness Index), ASTM E 950. Use a 1/4 car.
(b) PI (Profile Index), ASTM E 1274. Use a zero blanking band.
(c) Profile deviation applies to bump and depression measurements.
(d) As a minimum, trace right wheel path in direction of travel

3. Smoothness is evaluated before the placement of preservation surfacing including: Thin Bonded Polymer Overlay, Microsurfacing, Slurry Seal, Bonded Wearing Course, Stone Matrix Asphalt or Chip Seal Coat.
4. Verify bumps and depressions are removed so profile roughness index in each lot meets tolerance:

a. Lot is 0.1 lane mile (528 feet long one lane wide). Add segments shorter than 250 feet to preceding lot. Treat partial segments longer than 250 feet as a lot.
b. Excluded from the lot are turn lanes, parking lanes, medians, Street Fixtures, crowns of intersecting streets, bridge decks, grades greater than eight (8) percent, and vertical curves less than 1,000 feet radius (including super-elevation transitions).

5. Profile Deviation: Verify “must grind” bumps and depressions are removed from the lot surface:
   a. Lot is area of total placement. No area is excluded.
   b. Begin traces 50 feet before edge of new pavement and end traces 50 feet after edge of new pavement. Areas (including the 50 feet end traces) exceeding profile deviation tolerance are “must grind” areas.

6. Correct all defects at no additional cost to the City.
   a. Correct defects across the entire width of the traffic lane or shoulder either by grinding with a device approved by the Engineer or by surface replacement as approved by the Engineer.
   b. Seal areas in HMA, and SMA that have been ground with a flush coat application.
      1) Use a CSS-1h, CSS-1, CQS-1, or equivalent emulsion, approximately 40 percent residual asphalt.
      2) Apply the emulsion at 0.11 ± 0.01 gal/yd^2.

REGULATORY RE UIREMENTS

A. Conform to applicable City requirements for paving work on City streets.

EN IRONMENTAL RE UIREMENTS

A. Place asphalt mix when base/pavement surface and ambient temperatures are 50°F or higher.

   1. The City determines and provides written approval if it is acceptable to place outside the above limits

B. Do not place when surfaces are wet or frozen.

PART PRODUCTS

MATERIALS

A. Asphalt Binder: Use PG 64-28 conforming to APWA Standard Specifications Section 32 12 05.

B. Aggregate: Crusher processed virgin aggregate material consisting of crushed stone, gravel, or slag meeting table 8.

   1. Coarse aggregates
      a. Retained on No. 4 sieve
   2. Fine aggregates
      a. Clean, hard grained, and angular
      b. Passing the No. 4 sieve

Table 8

A r Pr r HMA			
T M d	**T N**	**Ar r d C r**	**R d S r**
One Fractured Face	AASHTO T 335	95% minimum	90% minimum
Two Fractured Face	AASHTO T 335	90% minimum	80% minimum
Fine Aggregate Angularity	AASHTO T 304	45 minimum	
Flats or Elongates	ASTM D 4791, 3:1 ratio	20% maximum	

L.A. Wear	AASHTO T 96	35% maximum
Sand Equivalent	AASHTO T 176 (Pre-wet method)	45 minimum
Plasticity Index	AASHTO T 89 and T 90	0
Unit Weight	AASHTO T 19	minimum 75 lb/cu ft
Soundness (sodium sulfate)	AASHTO T 104	16% maximum loss with five cycles
Clay Lumps and Friable Particles	AASHTO T 112	2% maximum
Natural Fines	N/A	0%

C. Meet gradation requirements in Table 9. Use ½" gradation unless directed otherwise by the City.

Table 9

A□□r□□□□ Gr□d□□□□□□ □P□r□□□□P□□□□□□ □□ Dr□ □ □□□□□□A□□r□□□□□			
S□□□□ S□□□		¾ □□□□	½ □□□□
C□□r□□ S□□□□□	□ □□□□	100.0	
	□ □□□□	90.0 - 100.0	100.0
	□ □□□□	<90	90.0 – 100.0
	⅜ inch		<90
	N□□□	*Provide for Information Only*	
	N□□□	23.0 - 49.0	28.0 - 58.0
	N□□□□	*Provide for Information Only*	
	N□□□□		
	N□□□□		
	N□□□□□		
	N□□□□□	2.0 - 8.0	2.0 – 10.0

C. Antistrip Agent: Hydrated Lime - AASHTO M 303, Type I in 3:1 slurry (water to lime) format.

D. Tack Coat: Homogeneous, Catonic Emulsified Asphalt, Grade CQS-1 or CQS-1h, conforming to Section 32 12 13.13 of APWA Standard Specifications.

□□□□ ASPHALT PA□ING MI□ES AND MI□ DESIGN

A. Perform Superpave Volumetric Mix Design according to Asphalt Institute Manual SP-2 and the following:

1. Comply with Table 10 and Table 11.
2. Use minimum □□□□□ □□□□□□□□ □□□□□□□□□□**d□r** □□ □□□□□ □ of mix.
3. Incorporate hydrated lime as necessary to meet Hamburg Wheel Tracker Requirements.
4. Do not use mix designs more than 1 year old.

Table 10

□□□□□ □□r□□ D□□□□□ G□r□□□□□□				
P□□□□ □□□ C□□□□□r□	**C□□ □□□□□□ P□r□□ □□□r□**			**□□d□ □□□□d □ □□□ A□□□□□□□□A□ □□ □**
	N□□□□□□ □□ □□G□ □ □	**N$_d$□□□□□ □□ □□G□ □ □**	**N□ □□ □□ □□G□ □ □**	
All Classes	7/ ≤ 90.5	75/ = 96.5	115/ ≤ 98	70 – 80

** G_{mm}: Theoretical maximum specific gravity of mix. Refer to AASHTO T 209.*

Table 11

□□□□□ □□r□□ D□□□□□ R□□□□r□□ □□□□	
HMA design mixing and compaction temperatures	As recommended by Binder Supplier, 325°F Maximum
Dust to Binder Ratio (by weight)	0.6 - 1.40

Voids in Mineral Aggregate (VMA) at N_{design} AASHTO R 35.9.2 using G_{sb} (dry). Equation based on percent of total mix.	13.5% - 14.5% for ¾ inch 14.5% - 15.5% for ½ inch *(report for information only – effective binder content and design air voids are primary design controls)*
Hamburg Wheel Tracker AASHTO T 324, 50°C	Maximum 10 mm impression at 10,000 passes

B. Recycled Asphalt Pavement (RAP): Mix design shall contain 10% or less recycled asphalt binder from RAP by total weight of binder. Do not adjust virgin binder grade when adding RAP.

   1. RAP aggregate is required to meet Table 8 with exception of Sand Equivalent

C. Submit proposed mix design of each class of mix for review at least 10 working days prior to beginning of work. Include the following.

   1. Date of mix design.
   2. Asphalt Binder source, type, chemical composition, and grade.
   3. Effective and total binder target percentages, by weight, and calculated dust to effective binder ratio (by weight).
   4. Compaction density at N_{design}.
   5. Volumetric targets including air voids, voids in the mineral aggregate (VMA), and voids filled with Bituminous Binder (VFA).
   6. Hamburg Wheel Tracker results and lime percentage
   7. Target Grading Curve for aggregate, including all sieves listed in Table 9.
   8. RAP properties including asphalt binder content and grade, and RAP percentage.
   9. Aggregate source and physical properties as identified in Table 8. Test results shall not be older than 455 days from the date of submission.
   10. Aggregate bulk and apparent specific gravities, percent absorption and blend percentage.
   11. Optimum compaction temperature at the project site.

PART 3 EXECUTION

3.1 EXAMINATION

A. Verify that compacted subgrade is dry and ready to support paving and imposed loads; and that subgrade has been accepted by the City Inspector or its representative.

B. Perform redhead and string test, verify gradients and elevations of base are correct and accepted by City.

C. Locate, reference, and protect all utility covers, monuments, curb and gutter and other components affected by the paving operations.

D. Remove all moisture, dirt, sand, leaves, and other objectionable material from the prepared surface.

3.2 PREPARATION 3.2.1 TACK COAT

A. Apply tack coat with 98% coverage.

B. Apply tack coat to contact surfaces of curbs, gutters and existing pavement.

C. Apply tack coat to longitudinal joints and between lifts.

D. Apply tack coat to contact surfaces of manhole frames and other utility structures.

E. Apply tack at the following rate, based on 2:1 dilution of emulsion concentrate (approximately 60% binder/40% water) to water:

Milled Surface 0.08 gal/

Existing HMA Surface 0.05 gal/SY
New HMA Surface (less than 48 hrs since placement) 0.03 gal/SY
Vertical Surfaces Hand spray to 98%

HMA PRODUCTION AND PLACING ASPHALT PAVEMENT

A. Dry aggregate material to an average moisture content of not more than 0.2 percent by weight. Mix uniformly; May be verified by AASHTO T 255. Adjust burners to avoid damage or soot contamination of the aggregate

B. Coat with asphalt binder 100 percent of the particles passing and 98 percent of the particles retained on the No. 4 sieve.

1. May be verified by AASHTO T 195.
2. Discontinue operation and make necessary corrections if material is not properly coated.

C. Maintain temperature of the HMA between identified limits for mixing and compaction as defined on Volumetric Mix Design Submittal.

1. The City Engineer shall reject materials heated over the identified limits.
2. Remove all material rejected by the City Engineer for overheating.

CEASE PRODUCTION

A. Cease production when any two out of three consecutive lots meet one of the following criteria:

1. A net disincentive
2. Air voids at N_{des} averaged for each lot are less than 2.5 or greater than 4.5 percent
3. Effective binder content averaged for each lot is not within Target Value ± 0.5 percent
4. Dust to binder Ratio exceeds Table 11.

B. Submit a corrective action plan to the City Engineer before production continues indicating the changes in production procedures that will be implemented to correct the deficiencies.

PLACING ASPHALT PAVEMENT

A. Provide a compactable sloped edge adjacent to the next lane to be paved when full-width or Echelon paving is impractical and more than one pass is required.
1. Coat edge with tack coat as per Article 3.02.
2. Echelon paving is the preferred method for constructing a longitudinal joint.

B. Adjust the production of the mixing plant and material delivery until a steady paver speed is maintained.

C. Offset longitudinal joints 6 to 12 inches in succeeding courses.
1. Place top course joint within 1 ft of the centerline or lane line.
2. Tack the longitudinal edge before placing the adjacent pass if the previous pass has cooled below 175 degrees F.

D. Offset transverse construction joints at least 6 ft longitudinally.

E. Do not allow construction vehicles, general traffic, or rollers to pass over the uncompacted end or edge of freshly placed mix until the mat temperature drops to a point where damage or differential compaction will not occur.

F. Taper the end of a course subjected to traffic at approximately 50:1 (horizontal to vertical).
1. Remove the portion of the pass that contains the tapered end before placing fresh mix.
2. Tack the contact surfaces before fresh mix is placed against the compacted mix.

G. Use a motor grader, spreader box, or other approved spreading methods for projects under 180 yd^2, irregular areas, or for miscellaneous construction such as detours, sidewalks, and leveling courses.

H. Use a minimum compacted lift is 3 times the nominal maximum aggregate size.

I. Compact pavement by rolling to specified density. Do not displace or extrude pavement from position. Hand compact in areas inaccessible to rolling equipment.

J. Perform rolling with consecutive passes to achieve even and smooth finish, without roller marks.

CONTRACTOR INITIATED CHANGES IN MIX DESIGN

A. Changes in job mix gradation:

1. Submit a written request for a change in a job-mix gradation at least 24 hours prior changing.
2. Do not change until permission from City or its representative is received.

PROTECTION

A. Immediately after placement, protect pavement from mechanical injury until surface temperature is less than 120 degrees F.

END OF SECTION

SECTION □□□□□

BITUMINOUS TYPE II SLURRY SEAL COAT

PART □ GENERAL

□□□□ SECTION INCLUDES

A. Bituminous Type II Slurry Seal coat for overlay.

□□□□ RELATED SECTIONS

A. Section 1300 – Administrative Requirements

B. Section 1400 – Quality Requirements

□□□□ RE□ERENCES

A. AI MS-19 - A Basic Asphalt Emulsion Manual; The Asphalt Institute – Latest Edition.

B. APWA Standards and Specifications - 2012 Edition.

C. ASTM C 88 - Standard Test Method for Soundness of Aggregates by Use of Sodium Sulfate or Magnesium Sulfate

D. ASTM C 131 - Standard Test Method for Resistance to Degradation of Small-Size Coarse Aggregate by Abrasion and Impact in the Los Angeles Machine

E. ASTM D 242 - Standard Specification for Mineral Filler For Bituminous Paving Mixtures

F. ASTM D 2419 - Standard Test Method for Sand Equivalent Value of Soils and Fine Aggregate

G. ASTM D 3319 - Standard Practice for Accelerated Polishing of Aggregates Using the British Wheel

H. ASTM D 3910 - Standard Practices for Design, Testing, and Construction of Slurry Seal

I. ASTM D 5821 - Standard Test Method for Determining the Percentage of Fractured Particles in Coarse Aggregate

□□□□ SUBMITTALS

A. See Section 01300 - Administrative Requirements, for submittal procedures

B. Mix Design as per Article 2.02 D.

□□□□ □UALITY ASSURANCE

A. Perform all Work in accordance with APWA Section 32 01 13.61 except where modified within this specification..

B. Obtain materials from same source throughout.

□□□□ REGULATORY RE□UIREMENTS

A. Conform to applicable City requirements for paving work on City streets, Section 1300 – Administrative Requirements.

□□□□ EN□IRONMENTAL RE□UIREMENTS

A. Place seal coat when ambient air or base surface temperature is 70 degrees F and rising. Pavement surfaces may not be above 120 degrees F.

B. Place bitumen mixture when temperature is not more than 15 F degrees below bitumen supplier's bill of lading and not more than maximum specified temperature.

PART □ PRODUCTS

□□□□ MATERIALS

A. Asphalt Cement: rapid cure emulsified asphalt, LM CRS-2; Conforming to APWA Section 32 12 03..

B. Aggregate: Conforming to Table 2 “Physical Properties” (a copy of the table is contained below) and Table 3 “Master Grading Band Limits” for SS-II (a copy of the table is contained below) APWA Section 32 01 13.61.

1. Material: Stone, slag, or other high quality particle or combination with the following physical properties.

Table 2 – Physical Properties				
Cr□□r□□		**ASTM**	**M□□□ □□**	**M□□□ □□**
Angularity (fractured faces), percent		D 5821	80	--
Wear (hardness or toughness), percent		C 131	--	35
Soundness (weight loss in 5 cycles), percent		C 88	--	10
Clay content (sand equivalent), percent	SS – I	D 2419	45	--
	SS – II	D 2419	55	--
	SS – III	D 2419	60	--
Polishing, BPN		D 3319	28	--
Water absorption, percent		--	--	1.25

NOTES
a. Angularity of aggregate retained on No. 4 sieve with at least one (1) mechanically fractured face or clean angular face. Provide 100 percent (maximum) for thoroughfares with a “heavy” traffic classification (Section 32 12 05).
b. Wear of aggregate retained on No. 12 sieve after 500 revolutions.
c. Soundness for combined coarse and fine aggregate measured using five (5) cycles Na_2SO_4.
d. Clay content before additives.

1. Gradation: Analyzed according to ASTM C 136 on a dry weight and percent passing basis:

a. Material passing any sieve and retained on the next consecutive sieve is 45 percent maximum.

Table 3 – Master Grading Band Limits	
S□□□□	**SS□II**
3/8 in.	□□□
No. 4	□□ □ □□□
No. 8	□□ □ □□
No. 16	□□ □ □□
No. 30	□□ □ □□
No. 50	□□ □ □□
No. 100	□□ □ □□
No. 200	□ □ □□

NOTES
a. Portion retained on the No. 4 sieve clean and free of clay coatings.
b. Portion passing No. 200 sieve includes mineral fill, ASTM C 117.

C. Additives:

1. Mineral Filler: ASTM D 242
2. Portland cement, hydrated lime, limestone dust, fly ash, or aluminum sulfate to regulate setting time and improve workability.
3. Limestone dust, fly ash, or rock dust to alter aggregate gradation.

D. Mix Design:

1. Use AMRL accredited laboratory.
2. Perform mix design in accordance with ASTM D 3910.
3. Set and Cure Time: Select to meet opening to traffic requirements
4. Stripping: Minimum 90% particles retaining coating, ASTM D 1664.

E. Submit proposed mix design for review at least 10 working days prior to beginning of work. Include the following:

1. Date of mix design
2. Emulsion source and grade
3. Total emulsion target percentages.
4. Selected set and cure times for design
5. Stripping test results
6. Target Grading Curve for aggregate, including all sieves listed in Table 3.
7. Aggregate source and physical properties as identified in Table 2. Test results shall not be older than 455 days from the date of submission.
8. Aggregate bulk and apparent specific gravities, percent absorption and blend percentage.

F. Temporary Raised Pavement Markers. Markers shall have polyurethane plastic bodies with reflective tape, clear flexible polyvinyl-chloride protective covers, and solid butyl rubber adhesive on bottom surface. Markers shall be 2-inches high and 4-inches wide; and of the color selected by the Engineer. Pavement markers shall be Temporary Raised Pavement Markers as manufactured by Davidson Plastics Company, or as acceptable to the City Engineer.

SOURCE UALITY CONTROL

A. Test mix design and samples in accordance with APWA.

PART E ECUTION

PREPARATION

A. Clean existing paved surfaces of all dirt, sand, dust and other objectionable material with use of power broom, prior to placing seal coat. Power broom shall be of a type acceptable to the City Engineer or City Inspector.

B. Protect all existing structures from being spattered or marred, including curb and gutter, etc.

PLACING TEMPORARY ROAD MARKERS

A. Prior to placing seal coat, install markers in accordance with APWA Standard and Specifications.

B. Install markers in accordance with the manufacturer's written instructions and recommendations, and as directed by the City Engineer or City Inspector.

C. Remove covers immediately after rolling is complete.

PLACING ASPHALT MATERIAL

A. Asphalt material shall be placed in accordance with APWA Standard and Specifications Section 3201 13.61.

B. Place material with a distributor equipped with a hydrostatic system and full circulating spray bar to spray the emulsion.

   1. Distributors shall be equipped with devices and charts to provide accurate and rapid determination and control of the amount of material being applied per square yard of surface; and with tachometers reading speeds in feet per minute.

   2. Equipment shall be able to control the rate that a uniform application of material may be made, ranging from 0.05 to 0.75 gallons per square yard of surface; to a width of at least 12 feet; and with a range of pressure from 25 to 75 pounds per square inch.

   3. Distributors shall be self-powered and shall have sufficient power to maintain a constant and uniform speed; and shall be equipped with a thermometer well, thermometer, adjustable spray bar and positive shut-off valves.

C. The rate of application shall be 0.25 to 0.35 gallons per square yard, as directed by the Engineer; maintain a tolerance of 0.03 gallons, more or less, per square yard.

D. Take special care to insure that joints between spreads are properly made, by starting and stopping the distributor on paper or by other methods acceptable to the City Inspector.

E. Maintain a distance of not more than 100 feet between the distributor and the chip spreader.

PLACING COVER MATERIAL

A. Cover material shall be spread by means of a spreader box, which can be adjusted to uniformly spread cover material at the required rate per square yard, as required and as directed by the City Engineer or City Inspector. Spreader box shall be of type acceptable to the City Engineer or City Inspector.

B. Rate of application of cover material shall be 12 to 16 pounds per square yard; with a tolerance of plus 1 to a minus 2 pounds per square yard.

C. After applying cover material, hand broom material, as required, to distribute the material uniformly over the surface.

ROLLING SURFACES

A. After the cover material has been uniformly spread over surfaces, surfaces shall be rolled until the cover material is thoroughly embedded in the asphalt material.

B. Use pneumatic-tire rollers in a longitudinal direction to roll surface. Equipment shall have at least two rollers up front and one roller behind; this last roller serves as a finish roller.

CLEAN-UP

A. After seal coat has thoroughly set, within one day, excess cover material shall be broomed from the surface.

B. Sweep surfaces before allowing uncontrolled traffic on the seal coat.

C. On sections of streets where paved gutters are present, excess cover material shall be loaded, hauled and disposed of as required and as directed by the City Engineer or Inspector; which includes removing cover material from the gutters and waterways.

END OF SECTION

SECTION □□□□□

CONCRETE STREET IMPRO□EMENTS

PART □ GENERAL

□□□□ SECTION INCLUDES

A. Cast-in-place concrete curb and gutter and appurtenant items.

B. Cast-in-place concrete waterways and appurtenant items.

C. Cast-in-place concrete sidewalks and appurtenant items.

D. Cast-in-place concrete driveway pavement and appurtenant items.

E. Handicap ramps and appurtenant items.

F. Curb-cut type driveway entrances and appurtenant items.

G. Cast-in-place concrete speed tables.

□□□□ RELATED SECTIONS

A. Section 02100 - Roadway and General Excavation.

B. Section 02115 - Structural Excavation.

C. Section 02116 - Fill and Backfill.

D. Section 02621 - Gravel Road Base.

E. Section 03300 - Cast-In-Place Concrete.

□□□□ SUBMITTALS

A. See Section 01300 - Administrative Requirements, for submittal procedures.

PART □ PRODUCTS

□□□□ MATERIALS

A. Concrete: As specified in Section 03300 - Cast-in-Place Concrete; using 3/4 inch maximum aggregate.

B. Concrete Reinforcement: As specified in Section 03300.

C. Gravel Base: As specified in Section 02621 - Gravel Road Base.

D. Expansion Joint Filler: Shall be 1/2-inch thick; conforming to ASTM D 1751 or AASHTO M 213. Joint filler shall be one-piece; and shall extend full width and depth of concrete section; 1/4-inch below and conforming to finished top surfaces of concrete items.

E. Handicap Ramp Warning Panels.

1. Panels shall be detectable warning systems conforming to ADA, FHWA and other appurtenant regulations; designed for exterior use and surface application.

2. Panels shall be durable panels molded from polyurethane, with truncated domes, meeting both state and federal guidelines for handicap detection.

3. Panels shall be molded from high strength polyurethane.
   a. Submit manufacturer's literature describing products, installation procedures and routine maintenance; and three samples of surface applied mat to be supplied.
   b. Panels shall have slip resistance in wet and dry environments.
   c. Panel color shall be yellow; conforming to Federal Color # 33538. Color shall be homogenous throughout the mat.

4. Panels shall comply with Americans with Disabilities Act, Title 49, Section 4.29 2.

5. Mats shall be installed according to manufacturer's written instructions and recommendations.
   a. Mats shall be applied to concrete surfaces with heavy-duty elastomeric two-part polyurethane ground adhesive, as recommended by the manufacturer.
   b. Edges and seams shall be sealed with cyanoacrylate sealer, as recommended by the manufacturer.
   c. Low profile nylon expansion anchors shall be installed after mats are installed, according to the manufacturer's instructions and recommendations.

6. After mats have been installed, the mats shall be protected from damage as recommended by the manufacturer.

7. Mats shall be cleaned by method specified by manufacturer.

8. Panels shall be Detectable Warning Mats as manufactured by Detectable Warning Systems, Inc., or or acceptable equal.

PART □ E□ECUTION

□□□□ E□AMINATION

A. Verify excavation for concrete items is correct.

B. Verify that sub-base has been compacted and accepted by the City Engineer or City Inspector, and that gradients and elevations are correct.

C. Verify that all areas of collapsible soil have been identified and properly prepared for sub-base.

□□□□ EARTH□ ORK

A. See Section 02100 - General Excavation and Section 02115 - Structural Excavation for requirements for excavating, backfilling and compacting; See Section 02116 - Fill and Backfill for requirements for filling and backfilling; and see Section 02621 - Gravel Road Base for requirements for gravel base.

B. Hand trim excavations for accurate placement of gravel base for concrete items.

C. Furnish, place, grade and compact untreated base course for concrete work, as indicated on the drawings and as directed.

   1. Curb and Gutter: compacted thickness shall be 6 inches.

   2. Waterways: compacted thickness shall be 6 inches.

   3. Sidewalks: compacted thickness shall be 6 inches.

   4. Driveway Pavement: compacted thickness shall be 6 inches.

D. Backfill around completed concrete items to required elevations, tamp in place and compact as required.

CONSTRUCTION

A. Form Work.

1. Forms shall be set to the required grade and lines, as indicated on the drawing; rigidly braced and secured.

2. Install sufficient quantity of forms to allow continuous progress of work; and so that forms can remain in place for at least 24 hours after placement of concrete.

3. Check completed form work for grade and alignment, before placing any concrete. Tolerances for form work shall not exceed 1/8-inch in 10 feet for the top of forms; and 1/4-inch in 10 feet for the vertical face.

4. Clean forms after each use and coat with form release agent as often as required to ensure separation from concrete without damage.

B. Concrete Placement.

1. Comply with applicable requirements of Section 03300 - Concrete for design, mixing and placement of concrete; and with the requirements herein.

2. Do not place concrete until subgrade and forms have been checked for line and grade; and are acceptable to the City Engineer or City Inspector.

3. Moisten subgrade as required to provide a uniform dampened condition at time concrete is placed.

4. Place concrete using methods which will prevent segregation of concrete mix, and with as little re-handling as possible.

5. Deposit and spread concrete in a continuous operation between transverse joints, as far as possible. If interrupted for more than 1/2 hour, place a construction joint.

6. Consolidate concrete along the face of forms with an internal vibrator. Keep vibrator away from joint assemblies or side frames. Consolidate with care to prevent dislocation of reinforcement and joint materials.

7. Use only square-faced shovels for hand spreading and consolidation.

8. Where handicap ramps and curb-cut type driveway entrances are to be constructed, the curb of new curb and gutter shall be eliminated down to the limits and for the width indicated on the drawings and as directed; and the curb shall be sloped on each side of the ramp and driveway entrance as indicated.

C. Expansion/Conmution Joints. Construct joints true-to-line, with face perpendicular to the surface of the concrete item and at right angle to centerline of the concrete item, unless shown otherwise. Joints shall be filled with joint filler material.

1. Curb and Gutter. Provide joints at a spacing not to exceed 100 feet, on center; unless indicated otherwise on the drawings and as directed by the City Engineer. Construct joints by inserting a 1/8-inch thick steel division plate, matching cross-section of curb and gutter, into concrete; plate shall not extend into bottom 4-1/2 inches of the curb and gutter. Set division plate into plastic concrete and carefully remove after concrete has hardened.

2. Sidewalks. Provide joints at a spacing not to exceed 40 feet, on center; unless indicated otherwise on the drawings and as directed by the City Engineer. Construct joints by inserting a 1/8-inch thick steel division plate into concrete; plate shall embedded 1/4 of sidewalk thickness, measured from the top of sidewalk. Set division plate into plastic concrete and carefully remove after concrete has hardened.

3. Driveway Pavement. Provide joints as indicated on the drawings and as directed by the City Inspector;

and where pavement abuts other concrete construction.

4. Speed Tables. Provide joints as indicated on the drawings and as directed by the City Inspector; and where speed tables abut other concrete construction.

5. Cold Joint. Provide expansion joints at all start/stop locations and as directed by City Inspector.

D. Construction Joints. Construct construction joints true-to-line, with face perpendicular to the surface of the concrete item and at right angle to centerline of the concrete item, unless shown otherwise.

1. Provide construction joints where required and as directed by the City Engineer.

2. Curb and Gutter. Provide construction joints at a spacing not to exceed 10 feet, on center; unless indicated otherwise on the drawings and as directed by the City Engineer.

3. Waterways. Provide construction joints to match the width of the sidewalk, on center; unless indicated otherwise on the drawings and as directed by the City Engineer.

4. Sidewalks. Provide construction joints at a spacing not to exceed 5 feet, on center; unless indicated otherwise on the drawings and as directed by the City Engineer.

5. Driveway Pavement. Provide construction joints at a spacing not to exceed 6 feet, on center; unless indicated otherwise on the drawings and as directed by the City Engineer.

6. Speed Tables. Provide construction joints at a spacing not to exceed 10 feet, on center; unless indicated otherwise on the drawings and as directed by the City Engineer.

E. Finishing and Ruling.

1. After striking off and consolidating concrete, smooth exposed surfaces by screeding and floating; adjust floating to compact surfaces and produce uniform texture.

2. After floating, check surfaces for trueness with a 10-foot long straightedge. Distribute concrete as required to remove surface irregularities; and refloat repaired surfaces to provide smooth, continuous surfaces with a tolerance of 1/4-inch when measured by the 10-foot long straightedge.

3. Work edges of gutters, waterways, sidewalks and driveway pavement, transverse joints, and contraction joints with an edging tool; and round to 1/4-inch radius, unless indicated otherwise.

4. Work edges of top back of curbs with an edging tool; and round to 1/2-inch radius, unless indicated otherwise.

5. Finishing:
   a. Curb and Gutter. After completion of floating and when excess moisture and surface sheen has disappeared, trowel finish exposed surfaces smooth, free of trowel marks, and uniform in texture and appearance.
   b. Waterways. After completion of floating and when excess moisture and surface sheen has disappeared, trowel finish exposed surfaces smooth, free of trowel marks, and uniform in texture and appearance. Surfaces shall be warped to match flow lines of gutters at each end of waterway, as indicated on the drawings and as directed by the City Engineer.
   c. Sidewalks. After completion of floating and when excess moisture and surface sheen has disappeared, broom finish exposed surfaces by pulling a fine-hair broom across concrete surfaces, perpendicular to line of traffic, until uniform in texture and appearance, and acceptable to the City Engineer.
   d. Driveway Pavement. Pavement shall be finished as specified for sidewalks; with rough flat finish acceptable to the City Engineer.
   e. Speed Tables. After completion of floating and when excess moisture and surface sheen has disappeared, trowel finish exposed surfaces smooth, free of trowel marks, and uniform in texture and appearance.

F. Form Removal and Repair Work.

1. Forms shall not be removed for at least 24 hours after concrete has been placed, unless otherwise acceptable to the City Engineer.

2. After form removal, clean ends of joints and point-up minor honeycombed areas.

3. Remove and replace areas or sections of concrete with major honeycomb areas, as required and as directed by the City Engineer.

G. Curing Concrete.

1. Protect and cure finished concrete, complying with applicable requirements of Section 03300 - Concrete.
   a. Use white colored cure.

2. Use moist-curing methods for initial curing, whenever possible.

3. A membrane-forming curing compound shall be used, when directed by the City Engineer; applied in accordance with the manufacturer's written instructions.

□□□□ SPECIAL CONSTRUCTION

A. Curb-Cut Type Driveway Entrances. Driveway entrances shall consist of modifying the curb of 30 inch curb and gutter and warping surfaces of 6-inch thick concrete driveway pavement or concrete sidewalk for the width and to the configuration indicated on the drawings, as described herein, and as directed by the City Engineer.

1. Curb of curb and gutter shall be eliminated down to the limits indicated on the drawings, and to the width of the existing driveway, or as directed; and the curb shall be sloped on each side of the driveway as indicated.

2. Where there is a park strip between the sidewalk and back of curb and gutter, driveway pavement, 6-inches thick, shall be constructed between the sidewalk and the back of curb. The surfaces of the driveway pavement shall be shaped to form a smooth entrance from the curb-cut at the curb and gutter to the edges of the sidewalk, as indicated.

3. Where the sidewalk is adjacent to the back of curb and gutter, 6-inches thick sidewalk shall be constructed at the driveway entrance, as indicated. The surfaces of the sidewalk shall be shaped to form a smooth entrance from the curb-cut at the curb and gutter to the edge of the sidewalk adjacent to the property line, as indicated and as directed.

B. Handicap Ramps. Handicap ramps shall be constructed at curb and gutter radius sections at street intersections, as indicated on the drawings. Work shall consist of modifying the curb of 30 inch curb and gutter and warping surfaces of concrete sidewalk for the width and to the configuration indicated on the drawings, as described herein, and as directed by the City Engineer.

1. Excavate as required to establish the proper sub-base for the gravel base for the ramp.

2. Furnish, place, grade and compact gravel base, 6-inches thick. Follow all current ADA requirements.

3. Curb of curb and gutter shall be eliminated down to the limits and to the width indicated on the drawings, or as directed; and the curb shall be sloped on each side of the handicap ramp as indicated.

4. Where there is a park strip between the sidewalk and back of curb and gutter, concrete pavement, 5-inches thick, shall be constructed to match back of curb and gutter radius section and the ends of the sidewalk on each side of the ramp. The surfaces of the concrete pavement shall be shaped to form a smooth ramp from the curb-cut at the curb and gutter to the ends of the sidewalk, as indicated.

5. Where the sidewalk is adjacent to the back of curb and gutter, concrete pavement, □-inches thick shall

be constructed to match back of curb and gutter radius section and the ends of the sidewalk on each side of the ramp, as indicated. The surfaces of the concrete pavement shall be shaped to form the handicap ramp from the curb-cut at the curb and gutter to the ends of the sidewalk, as indicated and as directed.

6. Warning panels shall be installed as indicated on the standard drawings; according to the manufacturer's drawings, written instructions and recommendations.

C. Speed Tables. Speed tables shall be constructed as indicated on the drawings, as described herein, where and as directed by the City Engineer.

REPAIR AND MAINTENANCE

A. Contractor shall repair and maintain project curb and gutter, waterways, sidewalks, driveway pavement, driveway entrances, handicap ramps, and other concrete structures as required, during the guarantee period.

1. All repairs shall be made with materials similar and equal to those described in these specifications.

2. All construction shall be done as described in these specifications.

B. Contractor shall, just before expiration of the guarantee period, make all such repairs as may be necessary to produce concrete items which will:

1. Conform substantially in contour to the concrete item as first constructed.

2. Be free from cracks or depressions showing disintegration of the concrete mixture of the concrete item.

3. Be free from all settlement of the surface of the concrete pavement holding water, or other settlements showing variation of 3/8-inch or more from the edge of a four-foot long straightedge.

4. Not have settled because of incomplete compaction of the subgrade.

C. When repairs, that are necessary to be made during the guarantee period, amount to more than fifty percent of a section between two expansion joints, the entire section shall be removed and disposed of; and that section shall be reconstructed in accordance with these specifications.

PROTECTION O CONSTRUCTED CONCRETE ITEMS

A. Protect concrete items of this section from damage by subsequent construction activities.

B. Replace damaged concrete items which cannot be repaired to the City Engineer's satisfaction.

IELD UALITY CONTROL

A. An independent testing agency will perform field quality control tests, as specified in Section 01400.

B. Provide free access to concrete operations at project site and cooperate with appointed firm.

C. Submit proposed mix design to engineer and testing firm for review prior to commencement of concrete operations.

D. Tests of concrete and concrete materials may be performed at any time to ensure conformance with specified requirements.

E. Compressive Strength Tests: ASTM C 39. For each test, mold and cure three concrete test cylinders. Obtain test samples for every 50 cu yd or less of concrete placed.

F. Take two additional test cylinders during cold weather concreting, cured on job site under same conditions as concrete it represents.

G. Perform one slump test for each load at point of discharge; and perform slump test with each set of test cylinders taken.

1. If maximum slump for the application is exceeded, it will be assumed that the water content is excessive and the load shall be rejected.

2. If slump is less that the minimum for the application, a measured quantity of water may be added to the mix; quantity shall not exceed 1/6 gallon of water per bag of cement.

3. Water shall be added only in the presence of the Engineer and after a slump test has been made.

4. If concrete has been mixed for more than one hour, the loss of slump shall be considered as being caused by setting of concrete; water shall not be added, and the load shall be rejected.

H. Perform test to determine air content in accordance with ASTM C 231; a minimum of one test shall be done each time a slump test is made. Air content shall be within specified limits.

END O SECTION

SECTION □□□□□

AUTOMATIC SPRINKLING SYSTEM

PART □ GENERAL

□□□□ SECTION INCLUDES

A. Complete automatic sprinkling system, including:

1. Pipe and fittings.
2. Valves, valve boxes, and appurtenant items.
3. Automatic controller, control valves, valve boxes, wires and appurtenant items.
4. Sprinkler heads and appurtenant items.
5. Connections to water main lines.

B. System design and testing.

□□□□ RELATED SECTIONS

A. Section 02112 - Trenching for Pipe Work: Excavating, pipe bedding, backfilling and compacting.

B. Section 02115 - Excavation: Excavating for structures and appurtenant items.

C. Section 02116 - Fill and Backfill: Pipe bedding and excavation backfilling.

D. Section 02586 - Backflow Preventer Station.

E. Section 03300 - Cast-in-Place Concrete: Concrete for structures and thrust blocks.

□□□□ RE□ERENCES

A. ASTM A 53 - Standard Specification for Pipe, Steel, Black and Hot-Dipped, Zinc-Coated, Welded and Seamless.

B. ASTM A 234 - Standard Specification for Piping Fittings of Wrought Carbon Steel and Alloy Steel for Moderate and High Temperature Service.

C. ASTM D 1785 - Standard Specification for Poly(Vinyl Chloride)(PVC) Plastic Pipe, Schedules 40, 80, and 120.

D. ASTM D 2239 - Standard Specification for Polyethylene (PE) Plastic Pipe (SIDR-PR) Based on Controlled Inside Diameter.

E. ASTM D 2241 - Standard Specification for Poly(Vinyl Chloride))PVC) Pressure-Rated Pipe (SDR Series).

F. ASTM D 2447 - Standard Specification for Polyethylene (PE) Plastic Pipe, Schedules 40 and 80, Based on Outside Diameter.

G. ASTM D 2466 - Standard Specification for Poly(Vinyl Chloride)(PVC) Plastic Pipe Fittings, Schedules 40.

H. ASTM D 2564 - Standard Specification for Solvent Cement for Poly(Vinyl Chloride)(PVC) Plastic Piping Systems.

I. ASTM D 2609 - Standard Specification for Plastic Insert Fittings for Polyethylene (PE) Plastic Pipe.

J. ASTM D 3139 - Standard Specification for Joints for Plastic Pressure Pipes using Flexible Elastromeric Seals.

K. ASTM D 3035 - Standard Specification for Polyethylene (PE) Plastic Pipe (DR-PR) Based on Controlled Outside Diameter.

L. AWWA C104/A21.4 - Cement-Mortar Lining for Ductile-Iron Pipe and Fittings for Water; American Water Works Association; (ANSI/AWWA C104/A21.4).

M. AWWA C105/A21.5 - Polyethylene Encasement for Ductile-Iron Pipe Systems; American Water Works Association; (ANSI/AWWA C105/A21.5).

N. AWWA C111/A21.11 - Rubber-Gasket Joints for Ductile-Iron Pressure Pipe and Fittings; American Water Works Association; (ANSI/AWWA C111/A21.11).

O. AWWA C151/A21.51 - Ductile-Iron Pipe, Centrifugally Cast, for Water; American Water Works Association; (ANSI/AWWA C151/A21.51).

P. AWWA C500 - Metal-Seated Gate Valves for Water Supply Service; American Water Works Association.

Q. AWWA C504 - Rubber Seated Butterfly Valves; American Water Works Association.

R. AWWA C508 - Swing-Check Valves for Waterworks Service, 2 In. (50 mm) Through 24 In. (600 mm) NPS; American Water Works Association; (ANSI/AWWA C508/C508a).

S. AWWA C509 - Resilient-Seated Gate Valves for Water Supply Service; American Water Works Association; (ANSI/AWWA C509/C509a).

T. AWWA C515 - Reduced-Wall, Resilient-Seated Gate Valves for Water Supply Service; American Water Works Associations: (ANSI/AWWA C515).

U. AWWA C600 - Installation of Ductile-Iron Water Mains and Their Appurtenances; American Water Works Association; (ANSI/AWWA C600).

V. STM D2774 - Standard Recommended Practice for Underground Installation of Thermoplastic Pressure Piping.

W AWWA C900 - Polyvinyl Chloride (PVC) Pressure Pipe, 4 In. Through 12 In., for Water Distribution; American Water Works Association; (ANSI/AWWA C900/C900a).

X AWWA C901 - Polyethylene (PE) Pressure Pipe and Tubing, 4 inch through 63 inch, for Water Distribution; American Water Works Association.

Y Use the latest issue of the above reference standards as of the date of the Project.

SUBMITTALS

A. See Section 01300 - Administrative Requirements, for submittal procedures.

B. Product Data: Provide data on pipe materials, pipe fittings, valves, controllers, sprinkler heads, and accessories.

C. Manufacturer's Certificate: Certify that products meet or exceed specified requirements.

D. Project Record Documents: Record actual locations of pipe lines, valves, controllers, sprinkler heads, connections, thrust restraints, and invert elevations. Identify and describe unexpected variations to subsoil conditions or discovery of uncharted utilities.

SYSTEM DESIGN

A. The sprinkling system shall be designed to provide adequate coverage to all areas to be watered.

B. Project drawings of the system shall be submitted to the City Engineer, showing design and general layout of pipe distribution system and sprinkler heads required to provide adequate coverage.

1. Drawings shall indicate pipe sizes, control valves, quick-coupling valves, automatic controller, control wiring, electrical service line, connections to water mains, backflow preventors, and all appurtenant items.

2. Pipe system for spray heads shall have minimum pipe size of 3/4-inch; for rotor pop-up sprinklers shall have minimum pipe size of 3/4-inch; and for the impact rotor pop-up shall have minimum pipe size of 1-inch.

3. Quick-coupling valves shall be placed in the system where and as directed by the City Engineer.

4. Drawings shall show system design pressures and PVC pipe classifications (either Schedule 40 or Schedule 80). A pipe size over 4” shall utilize class 200 pipe.

C. Design a pipe distribution system to provide water to each of the heads, as required; minimum water pressure at each spray head is to be 50 psi and minimum water pressure at each rotator head is to be 60-90 psi.

D. The Contractor may modify the layout of heads to better fit project conditions; providing that adequate coverage is maintained.

UALITY ASSURANCE

A. Perform Work in accordance with City's requirements as described herein.

B. A third party audit verifying the distribution uniformity (DU) of the system is needed. Minimum requirements are 70% for the rotors and 50% for spray heads.

DELI ERY STORAGE AND HANDLING

A. Deliver and store valves, controllers, heads, and appurtenant items in shipping containers with labeling in place.

OPERATING AND MAINTENANCE DATA

A. Provide complete As-Builts for entire system. Also Provide an 8 ½”x 11” laminated zonemap illustrating each zone by color and zone number.

B. Provide instructions covering full operation, care and maintenance of system and controls; and manufacturer's parts catalog.

C. Instruct City's designated maintenance personnel in the proper operation of the system, including adjustment of sprinkler heads.

D. Submit 3 copies of written instructions recommending procedures to be established by the City Engineer for the maintenance of the system from year to year.

1. Submit prior to expiration of required one year guarantee period.

2. Provide information in the manuals that include the following:
   a. written index near front of Manual listing location in the Manual of all emergency data regarding the installation;
   b. complete nomenclature of all replaceable parts, their part numbers, current cost, and name and

address of the nearest vendor of replacement parts; and

c. copy of all guarantees and warranties issued on the installation showing all dates of expiration.

PART □ PRODUCTS

□□□□ GENERAL

A. All sprinkler heads, control valves, quick-coupling valves, automatic controllers and appurtenant items for the sprinkling system shall be supplied by the same supplier. All materials shall be reviewed and accepted by the City Engineer prior to installation. Materials shall be as manufactured by Rainbird Sprinkling Mfg. Corporation, or acceptable equal.

□□□□ □ ATER SUPPLY AND DISTRIBUTION PIPE

A. Ductile Iron Pipe: AWWA C151:

1. Fittings: Ductile iron, standard thickness.

2. Joints:
   a. Push-On Joints: AWWA C111, push-on type with rubber gasket.
   b. Mechanical Joints: AWWA C111, mechanical joint type with gasket, bolts, and nuts.
   c. Flange Joints: AWWA C110, flange type with gasket, bolts, and nuts.

3. Jackets: AWWA C105 polyethylene jacket.

B. PVC Pipe: AWWA C900 Class 150 or 200, as indicated:

1. Fittings: AWWA C111, cast iron.

2. Joints: ASTM D 3139 compression gasket ring.

C. Polyethylene Pipe: ASTM D 3035, for 160 psig pressure rating:

1. Fittings: AWWA C901, molded or fabricated.

2. Joints: Compression.

D. High Density Polyethylene Pipe: AWWA C906:

1. Material: PE 3408 High Density Polyethylene (HDPE) meeting ASTM D3350 cell classification of 345434C.

2. Fittings: AWWA C906, molded or fabricated; or mechanical joint ductile iron fittings.

3. Joints: Butt fusion.

E. Trace Wire: Magnetic detectable conductor, clear plastic covering, imprinted with "Water Service” in large letters for all plastic pipe.

□□□□ SPRINKLING SYSTEM DISTRIBUTION AND LATERAL PIPE

A. PVC Pipe: ASTM D 1785, Schedule 40 or 80, as required.

1. Fittings: ASTM D 2466, Schedule 40 or 80, as required.

2. Joints: Cemented with Primer and solvent weld, as required.

3. Schedule 80 pipe shall be used between stop & waste valves and master valves; and Schedule 40 pipe shall be used downstream from master valves.

B. Polyethylene Pipe: ASTM D 3035, for 160 psi pressure rating:

1. Fittings: AWWA C901, molded or fabricated.
2. Joints: Compression.

C. The minimum pipe size for distribution and lateral pipes to be 3/4-inch.

□□□□ □AL□ES

A. Valves: Manufacturer's name and pressure rating marked on valve body.

B. Gate Valves Up To 3 Inches:

1. Brass or Bronze body, non-rising stem, inside screw, single wedge or disc, IPS ends, and handwheel.

2. Product: Powell U.S. Bronze Gate Valves, or other valves acceptable to the City Engineer.

3. Substitutions: See Section 01600 - Product Requirements.

C. Gate Valves 3 Inches and Over:

1. AWWA C500, iron body, bronze trim, non-rising stem with square nut, single wedge, mechanical joint or flanged ends as indicated, and cast iron valve box.

2. AWWA C509, iron body, bronze trim, non-rising stem with square nut, single wedge, resilient seat, mechanical joint or flanged ends as indicated, and cast iron valve box.

3. AWWA C515, ductile iron, bronze trim, non-rising stem with square operating nut, single ductile iron wedge, mechanical joint or flanged ends as indicated, and cast iron valve box.

4. Product: Mueller Gate Valves or Resilient Seat Gate Valves, or American Flow Control Series 2500 Resilient Seat Gate Valves; with appropriate type Pacific States Cast Iron Valve Box, or accepted equal.

D. Ball Valves Up To 2 Inches:

1. Brass body, teflon coated brass ball, rubber seats and stem seals, Tee stem pre-drilled for control rod, compression inlet end, compression outlet, with control rod, valve key, and extension box.

2. Treat the Ball Valve and Handle to prevent moisture from metal causing corrosion.

E. Swing Check Valves from 2 Inches to 24 Inches:

1. AWWA C508, iron body, bronze trim, 45 degree swing disc, renewable disc and seat, flanged ends.

2. Product: Mueller Swing-Type Check Valve, or other valves acceptable to the City Engineer.

F. Butterfly Valves from 2 Inches to 24 Inches:

1. AWWA C504, iron body, bronze disc, resilient replacement seat, mechanical joint or flanged ends as indicated, manual worm gear operator, and cast iron valve box where required.

2. Underground manual operators shall be totally enclosed, factory grease packed and sealed, bronze worm gear operators with self-locking gearing; stops shall be provided to prevent over travel of valve disc.

3. Valve operator shall be geared to close valves slowly. Number of turns to close valve from full open

position shall be: 32 turns for 10-inch and smaller valves, 52 turns for 12-inch thru 16-inch valves, and 76 turns for 18-inch thru 24-inch valves. Closing times for larger valves shall be accepted by the City Engineer.

4. Product: Mueller "Lineseal III" Butterfly Valve with appropriate type Pacific States Cast Iron Valve Box, or other valves acceptable to the City Engineer.

G. Corporation Stops: shall be type for connecting to copper or polyethylene pipe; Mueller No. H- 15000, or other stops acceptable to the City Engineer, for up to 2-inch service line.

H. Air Release Valves: shall be combination air release valves; APCO Combination Air Release Valves, or other valves acceptable to the City Engineer, of size indicated on the drawings.

SPRINKLER HEADS

A. Part Circle Rotor Pop-Up Sprinklers.

1. Part circle rotor pop-up sprinklers shall be a single nozzle gear drive type, capable of covering the design radius at the site pressure with a discharge rate as recommended by the manufacturer; and shall have an infinitely adjustable arc of coverage from 40° to 360°.

2. Sprinkler case shall be constructed of rugged ABS plastic. The internal assembly shall include water-lubricated gear drive, pressure-activated wiper seal, SAM check device and heavy duty screen. The rotation of the sprinkler shall be accomplished by a gear drive.

3. The sprinkler nozzle shall have an outlet trajectory of 25° from the horizontal, with adjustment screw.

4. The sprinkler shall have a heavy-duty stainless steel retract spring to ensure positive pop-down. Pop-up height shall be not less than 6 inches; and the inlet shall be one-inch (FNPT).

5. The sprinkler shall be constructed so that all internal parts, including inlet screen, are accessible through the top of the sprinkler case without disturbing the soil around the case. The sprinkler shall have a rubber cover and vandal resistant cover screws.

6. Sprinklers shall be Part Circle Rotor Pop-up Sprinklers, of the appropriate size and type, as manufactured by Rain Bird Sprinkling Mfg. Corporation, Hunter Industries, or other sprinklers acceptable to the City Engineer.

B. Full Circle Rotor Pop-Up Sprinklers.

1. Full circle rotor pop-up sprinklers shall be a single nozzle gear drive type, capable of covering the design radius at the site pressure with a discharge rate as recommended by the manufacturer.

2. Full circle sprinklers shall have the same construction as the part circle sprinklers described above.

3. Sprinklers shall be Full Circle Rotor Pop-up Sprinklers, of the appropriate size and type, as manufactured by Rain Bird Sprinkling Mfg. Corporation or Hunter Industries.

C. Full/Part Circle Rotor Pop-Up Sprinklers.

1. Rotor pop-up sprinklers shall have full or part circle capabilities in one unit; and shall be a single nozzle, water lubricated, turbine drive type with internal impact speed reduction, capable of covering the design radius at the site pressure with a discharge rate as recommended by the manufacturer.

2. Part circle sprinkler shall have an infinitely adjustable arc of coverage from 25° to 350°. The sprinkler shall not reverse direction during continuous operation in the full circle mode. Arc adjustment shall not require any tools.

3. The sprinkler case shall be constructed of rugged ABS plastic. The sprinkler shall include a stainless steel locking set-screw at cap threads to provide vandal resistance and a “Seal-A-Matic” (SAM) device built onto the inlet screen shall hold back 8 feet of elevation change to prevent puddling. The sprinkler

shall have a non-strippable drive mechanism and shall permit manual rotation of the pop-up stem; and shall have a pressure-activated, multi-function, soft elastomer wiper seal that positively seals against the nozzle flange to keep debris out of the rotor and to clean debris from the pop-up stem as it retracts. The sprinkler range nozzle shall have an outlet trajectory of 23° from the horizontal. The sprinkler shall have a screen attached to the drive housing to filter inlet water and prevent the nozzle from clogging.

4. Sprinklers shall have a heavy-duty stainless steel retract spring to ensure positive pop-down. Pop-up height shall be not less than 5 5/8-inch; and the bottom inlet shall be 3/4-inch (FNPT).

5. Sprinklers shall be constructed so that all internal parts, including inlet screen, are accessible through the top of the sprinkler case without disturbing the soil around the case. The sprinkler shall have a rubber cover and vandal resistant cover screws.

6. Sprinklers shall be Full/Part Circle Pop-up Rotor Sprinklers, of the appropriate size and type, as manufactured by Rain Bird Sprinkling Mfg. Corporation, Hunter Industries, or other sprinklers acceptable to the City Engineer.

D. Sprinkler Types and Spacing.

1. Large Area Rotors: Hunter I-40 at 50 foot maximum spacing.

2. Medium Area Rotors: Hunter I-20 at 35 foot maximum spacing.

3. Spray Heads: Rainbird # 1806 for turf areas; # 1812 for shrub beds.
   a. East to west park strips: provide 120 percent coverage; 12 foot spacing typical.
   b. North to south park strips: provide 100 percent coverage; 15 foot spacing typical.
   c. Built in check valves required if elevation changes from one head to next head.
   d. No Adjustable Arc Nozzles, Fixed Arc Nozzles only.
   e. No MP Rotator Nozzles.

4. Drip Systems: Hunter PCN Nozzles, series bubbler nozzles.
   a. Compatible with Pro Spray bodies or 1800 heads.
   b. No fixed risers for bubblers.
   c. Pop-Ups with spray heads

5. Type of landscape areas are to determine flow requirements.
   a. P.R.V. and if needed, use on individual pressure regulating device, such as an accuset.

□□□□ ELECTRIC CONTROL □AL□ES

A. Electric remote control valves shall be normally closed 24 VAC, 60 cycle, solenoid actuated globe pattern design capable of having a flow rate as required with a pressure loss not to exceed 1.5 psi. The valve pressure rating shall not be less than 200 psi.

B. Valve body and bonnet shall be constructed of heavy-duty glass-filled UV resistant nylon and have stainless steel studs and flange nuts; diaphragm shall be of nylon reinforced nitrile rubber.

C. Valve shall have both internal and external manual open/close control, for manually opening and closing the valve without electrically energizing the solenoid. The valve's internal bleed shall prevent flooding of the valve box.

D. Valves shall house a fully-encapsulated, one-piece solenoid. The solenoid shall have a captured plunger with a removable retainer for easy servicing, and a leverage handle for easy turning. The 24 VAC, 60 Hz solenoid shall open with 19.6 VAC minimum at 200 psi. At 24 VAC, average inrush current shall not exceed 0.41 amps.

E. Valves shall have a brass flow control stem for accurate manual regulation and/or shut off of outlet flow. The valve must open or close in less than one minute at 200 psi, and less than 30 seconds at 20 psi.

F. Valves shall have a self-cleaning stainless steel screen designed for use in dirty water applications.

G. Valve construction shall be such as to provide for all internal parts to be removable from the top of the valve without disturbing the valve installation.

H. Control valves shall be Electric Remote Control Plastic Scrubber Valves, of the appropriate size and type, as manufactured by Rain Bird Sprinkling Mfg. Corporation, Hunter ICV Control Valves with Filter Sentry, or other valves acceptable to the City Engineer.

□□□□ □UICK□COUPLING □AL□ES

A. Quick-coupling valves shall be a 1" one piece type; constructed on heavy cast brass. The cover shall be durable, self-closing, locking rubber cover. The valves shall be opened and closed by a brass key of the same manufacturer, having an appropriate outlet. The valve throat shall have a keyway with detent positions for regulating flow.

B. Quick-coupling valves shall be Model 3-RC, as manufactured by Rain Bird Sprinkling Mfg. Corp., or other valves acceptable to the City Engineer.

□□□□ CONTROL □ IRE

A. Control wire shall be UF No. 14 gauge or larger; conforming to the requirement of Section 05123.

□□□□ SPRINKLING SYSTEM CONTROLLER

A. Sprinkling system controller shall be capable of fully automatic or manual operation of the system.

B. The controller shall operate on a 17 VAC, plus or minus 10%, power input; and be capable of operating four 24 VAC electric remote control valves per station. The controller shall have a reset circuit breaker to protect it from power overload.

C. The controller shall be constructed such that all internal parts are accessible through the controller door without disturbing the cabinet installation.

D. The controller shall be an Hunter ACC Clock Controllers, of the appropriate size and type, or other controllers acceptable to the City Engineer. Including IMMS Radio, Com Module, Antenna and Cable with Raised Yagi, or as required by the City Engineer, to be installed per the Radio Gain Test.

E. The enclosure for the controller shall be a combined 120/240 volt commercial meter socket with enclosure, as required.

1. The enclosure unit shall have a compact, double door, front and back design; to provide viewing and programming convenience.
   a. Construction shall be 100 percent stainless steel; finish shall be brushed stainless steel.
   b. The unit shall be weather and vandal resistant, NEMA TYPE 3R rated, with three-point locking system; and shall be UL listed.
   c. The unit shall have a 10-year limited warranty.

2. Meter section:
   a. UL listed, E.U.S.E.R.C. 308 approved commercial meter socket, 100 amp rated, with test block bypass provision.
   b. Hinged viewing window to provide convenient access for metering agency.
   c. Shall include 100 amp load center with 8 positions.

3. The enclosures shall be Strong Box Metered Stainless Steel Combination Enclosure, Model SB-24SS / 120/240 V , as required and as manufactured by V.I.T. Products, Inc.”

MISCELLANEOUS ITEMS

A. Miscellaneous appurtenant items shall be provided as indicated on the drawings or as required to complete the sprinkler system.

PIPE BEDDING AND BACKFILL MATERIALS

A. Bedding: As specified in Sections 02112 and 02116.

B. Backfill: As specified in Sections 02112 and 02116.

ACCESSORIES

A. Service Clamps: shall be bronze, double-strap type; Mueller No. H-16134, or acceptable equal, for up to 2 inch service lines.

B. Concrete for Thrust Restraints: Concrete type specified in Section 03300.

C. Manhole and Cover: Refer to Section 02340.

PART EXECUTION

GENERAL

A. The Contractor shall furnish all labor, materials and equipment as required to construct the complete automatic, underground sprinkling system, as described herein and as shown on the design drawings, as indicated on the submittal drawings, and as acceptable to the City Engineer; and shall furnish and install all supplementary and miscellaneous items, appurtenances, and devices incidental to or necessary for a workable and complete sprinkling system installation.

B. All material shall be installed according to the manufacturer’s written instructions and recommendations.

C. The Contractor shall test the entire sprinkling system to assure proper operation.

EXAMINATION

A. Verify that design drawings conform to project conditions.

B. Verify that existing water main sizes and locations are as indicated on the drawings.

PREPARATION

A. Cut pipe ends square, ream pipe ends to full pipe diameter, remove burrs.

B. Remove scale and dirt on inside and outside before assembly.

C. Prepare pipe connections to equipment with flanges, mechanical joints or mechanical couplings.

TRENCHING

A. Trenching for the sprinkling system shall be done to ensure proper grades, slopes and alignment; and to provide minimum cover over main lines of 24-inches and 12-inches over laterals.

B. See Section 02112 and Sections 02115 and 02116 for additional requirements.

C. Hand trim excavation for accurate placement of pipe to elevations indicated.

D. Form and place concrete for pipe thrust restraints at each change of pipe direction. Place concrete to permit full access to pipe and pipe accessories. Provide required area of thrust restraint bearing on subsoil as indicated on the drawings.

E. Backfill around sides and to top of pipe zone with pipe bedding material, tamp in place and compact to required density.

F. Backfill trench from top of pipe zone to top of trench with trench backfill material, tamp in place and compact to required density.

□□□□ INSTALLATION □PIPE

A. Group piping with other piping work whenever practical.

B. Establish elevations of buried piping to ensure not less than 2 feet of cover over main lines and 12 inches over laterals; or as indicated on the drawings and as directed by the City Engineer.

C. Install pipe to indicated elevation to within tolerance of one inches.

D. Install ductile iron piping and fittings to AWWA C600.

E. Install PVC pressure pipe and fittings to ASTM D2774.

F. Install pipe lines to line and grade indicated.

G. Install pipe to allow for expansion and contraction without stressing pipe or joints.

H. Slope water pipe and position drains at low points.

I. Install trace wire above top of PVC and PE pipe; coordinate with Section 02112.

□□□□ INSTALLATION □□AL□ES

A. Set valves on concrete block or other acceptable solid bearing.

B. Center and plumb valve box over valve operating nut. Set box cover flush with finished grade.

□□□□ INSTALLATION □CONTROL □AL□ES

A. Install control valves where and as shown on the submittal drawings.

1. Each control valve shall have threaded unions installed immediately upstream and downstream of all valves.

2. Each control valve shall have its own isolation valve, immediately upstream of the first union. No “Action” union manifolds or “Action” union ball valves.

3. Install only one control valve per rectangular box.

4. Use of male adapters are prohibited.

B. Set valves on concrete block or other acceptable solid bearing.

C. Center and plumb valve boxes over valves. Set box cover flush, not level, with finished grade as directed by the City Engineer.

□□□□ INSTALLATION □□UICK□COUPLING □AL□ES

A. Quick-coupling valves shall be installed where and as shown on the submittal drawings and as directed by the City Engineer.

B. Quick-coupling valves are to be installed in the system to provide the Owner access so that the system can be winterized by blowing out the system with compressed air; therefore, the valves shall be located as directed by the City Engineer.

□□□□ INSTALLATION □AUTOMATIC CONTROLLER

A. The controller and remote control valves shall be of the same manufacturer, having similar operational and adjustment features.

B. The controller shall have a weatherproof panel enclosure; with the controller mounted on a pedestal, where and as indicated on the drawings and as directed by the City Engineer; in such a manner that all normal adjustments can be conveniently made by the operator.

C. The controller shall be properly grounded in accordance with local codes.

D. Control wire shall be installed from the controller to all control valves and other equipment as required for proper operation of the sprinkling system.

□□□□ □ IRE AND ELECTRICAL □ ORK

A. Electrical control and ground wire shall be suitable for sprinkler control cable of sizes indicated on the drawings and as recommended by the manufacturer or supplier.

B. Use Type "UF", 600 volt, stranded or solid copper, single conductor wire, with PVC insulation and bearing UL approval for direct underground burial, for connecting the automatic remote control valves to the automatic controller.

   1. Use wire with 4/64-inch insulation, minimum covering of ICC-100 compound for positive weatherproofing protection.

   2. For wire sizes 14, 12, 10 and 8 use a single conductor solid copper wire; and for sizes 6 and 4 use stranded copper wire.

   3. Control or "hot" wires shall be red and all common or "ground" wires shall be white.

C. Make all connections with UL approval Pen-tite type seal to make a waterproof connection.

D. Bury wires underneath main line pipe when in the same trench as the pipe.

E. Verify that all wire types and installation procedures conform to NEC and local codes.

□□□□ INSTALLATION □SPRINKLER HEADS

A. Flush the sprinkler system thoroughly to remove all foreign materials prior to the installation of sprinkler heads.

B. Install rotor pop-up heads with a swing joint connection, as indicated on the drawings.

   1. All swing joints shall consist of three 90 degree Schedule 40 PVC street ells and Schedule 80 nipples with a minimum length of 12 inches.

   2. Size of swing joint pipe and fittings shall be as shown on the drawings.

C. Install spray heads as indicated on the drawings.

BACK LO PRE ENTER STATION

A. Provide Reduce Pressure Zone (RPZ) where and as indicated on the drawings; see Section 02586.

CONNECTIONS TO E ISTING ATER LINES

A. Connection to existing water lines shall be made where and as indicated on the drawings and as directed by the Engineer. The sizes of pipe, fittings, valves and appurtenant items required to make connection shall correspond to the sizes of existing pipe and of project pipe.

B. Excavate to existing pipe line at point of connection; determine actual conditions of existing pipe and all fittings and appurtenant items required to make the connection; and have all materials needed on site prior to any shut down or cutting into existing pipe lines.

C. Connection which involve cutting into existing pipe lines include: cutting and removing sections of existing pipe and fittings as required; cleaning and preparing ends of existing pipe as required for connection; furnishing and installing all new pipe, fittings and valves required to make the connection of project pipe to the existing pipe as indicated; and all appurtenant work required to complete the connection.

D. Connection into existing pipe lines under pressure include: furnishing and installing mechanical joint tapping sleeve of the appropriate size on the existing pipe at point of connection; furnishing and installing tapping valve, with valve box, on sleeve; tapping existing pipe with acceptable type drilling machine and equipment, without interrupting flow in existing pipe line; and all appurtenant work required to complete the connection.

E. Connection to existing pipe line shall be made at such times and within the time limits and according to the directions as agreed to between the Contractor and the City Engineer.

IELD UALITY CONTROL

A. Perform field inspection and testing in accordance with Section 01400.

B. Pressure test water piping to 1.25 times pipe line working pressure in psi.

C. If tests indicate Work does not meet specified requirements, remove Work, replace and retest at no cost to City.

OPERATIONAL TESTING

A. Provide the City Engineer or City Inspector with seven days written notice of sprinkling operational system test.

B. Test shall consist of the operation of the entire system through one cycle of controller for propose of checking coverage and assuring of absence of leaks.

   1. Repair water lines, valves, or connections which show evidence of leakage.

C. After all repairs or replacements have been made and accepted by the City Engineer or City Inspector, repeat the above required test.

END O SECTION

SECTION □□□□□

RESTORING □ ETLANDS AREAS

PART □ GENERAL

□□□□ SECTION INCLUDES

A. Restoration of wetlands areas.

□□□□ RELATED SECTIONS

A. Section 02112 - Trenching: Preparation of subsoil and placement of topsoil in preparation for the work of this section.

□□□□ RE□ERENCES

A. Standards of Official Seed Analysis of North America.

□□□□ DE□INITIONS

A. Weeds: Includes Cheatgrass (Bromus Tectorum), Dandelion, Jimsonweed, Quackgrass, Horsetail, Morning Glory, Rush Grass, Mustard, Lambsquarter, Chickweed, Cress, Crabgrass, Canadian Thistle, Nutgrass, Poison Oak, Blackberry, Tansy Ragwort, Johnson Grass, Poison Ivy, Nut Sedge, Nimble Will, Bindweed, Bent Grass, Wild Garlic, Perennial Sorrel and Phragmites.

□□□□ SUBMITTALS

A. See appropriate sections of the Contract Documents for submittal procedures.

B. Certification: Submit certification of grass species and location of seed source.

□□□□ □UALITY ASSURANCE

A. Seed Vendor: Company specializing in seed with minimum five years experience, and certified by the State of Utah.

B. Installer Qualifications: Company approved by the seed vendor.

□□□□ REGULATORY RE□UIREMENTS

A. Comply with the requirements of the U.S. Army Corps of Engineer for work within wetlands areas.

B. Comply with regulatory agencies for fertilizer and herbicide composition.

C. Provide certificate of compliance from authority having jurisdiction indicating approval of fertilizer and herbicide mixture.

PART □ PRODUCTS

□□□□ MATERIALS

A. Wetlands Seed Mix.

1. Seed Mix. Provide fresh, clean, new-crop seed complying with tolerance for purity and germination established by the Association of Seed Analysis of North America. Provide seed of species, mechanically premixed to the specified proportions, with minimum percentages of purity, germination and maximum percentages of weed seed as certified. Seed Mix shall be a blend of the listed seeds, as supplied by Granite Seed Company of Lehi, Utah.

2. Standards. Seed mix shall comply with “Standards of Official Seed Analysis of North America”; for 85% purity, 80% germination and 1% (maximum) weed seed.

3. Submit seed vendor's certified statement for each seed mixture required; stating botanical and common name, percentage by weight, and percent of purity, germination and weed seed for each seed species.

4. Provide Wetland seed mix of the following species and with proportions as approved by the Corps of Engineers:
   a. Nebraska Sedge (Carex nebrascensis)
   b. Baltic Rush (Juncus balticus)
   c. Redtop (Agrostic alba)
   d. Garrison Creeping Foxtail (Alopecurus Arundinaceus)

5. Sow the seed mix in quantities to provide pure, live seed at the coverage rate of 20 pounds per acre.

6. Delivery. Seed shall be delivered to the site in original unopened containers, bearing the dealer’s guaranteed analysis and germination percentage and a certificate or stamp or release by a County agriculture commissioner.

B. Fertilizer: Recommended for seed mix, with fifty percent of the elements derived from organic sources; of proportion necessary to eliminate any deficiencies of topsoil, as indicated by analysis.

C. Water: Clean, fresh and free of substances or matter which could inhibit vigorous growth of grass.

□□□□ TESTS

A. Provide analysis of topsoil fill under provisions of Section 01400.

B. Analyze to ascertain percentage of nitrogen, phosphorus, potash, soluble salt content, organic matter content, and pH value.

C. Testing is not required if recent tests within six months are available for imported topsoil. Submit these test results to the testing laboratory for approval. Indicate, by test results, information necessary to determine suitability.

PART □ E□ECUTION

□□□□ E□AMINATION

A. Verify that prepared soil base is are ready to receive the work of this section.

□□□□ PREPARATION

A. Prepare sub-grade in accordance with Section 02112.

B. Place topsoil, where required, in accordance with Section 02112 and Section 02100.

□□□□ □ERTILI□ING

A. Apply fertilizer in accordance with manufacturer's instructions.

B. Apply after smooth raking of topsoil and prior to seeding.

C. Apply fertilizer no more than 48 hours before installing erosion control mat and seeding.

D. Mix thoroughly into upper 2 inches of topsoil.

E. Lightly water to aid the dissipation of fertilizer.

□□□□ RESTORATION O□ □ ETLANDS AREAS

A. Restore existing wetlands areas which are disturbed or damaged by project trenching operations or structural excavations, as indicated on the drawings and as directed by the City Engineer. Wetlands areas shall be as classified by the U.S. Army Corps of Engineers, following field reconnaissance and testing; and shall be to the limits designated by the Engineer..

1. Restoration shall be done according to the wetlands permit included with the approved project drawings.

2. Remove the top 2 feet of top soil material and store separately from other excavated material, as directed by the Engineer.

3. After the lower portions of trench or excavations are backfilled with acceptable materials and compacted, the stockpiled top soil material shall be placed in the upper portion of the trench or excavations and compacted, as directed by the Engineer.

4. Top of restored top soil shall match adjacent ground surfaces.

5. Restoration of wetlands areas shall include preparation of seedbeds and seeding the areas to be restored.

6. Condition of restored wetlands areas shall match original conditions and shall be acceptable to the City Engineer and the Corps of Engineers.

B. Planting.

1. Preparation.
   a. Till area to be planted to a depth of not less than 4 inches prior to seeding; and to a homogeneous mixture of fine texture, free of lumps and clods.

   b. Grade planting areas to provide smooth, even surfaces with a loose, uniformly fine texture. Roll and rake and remove ridges and fill in depressions as required.

   c. Moisten prepared areas by sprinkling before planting, if soil is dry. Water thoroughly and allow surface to dry off before planting. Do not create muddy soil condition.

2. Seeding.
   a. Seed shall be applied by hydraulic method with a hydro-seeder at the coverage rate recommended by the seed vendor and as accepted by the City Engineer. Seeding may be done using spreader or seeding machine, at the rate indicated and as recommended by the seed vendor, as acceptable to the City Engineer. Do not use wet, moldy or damaged seed.
   b. Distribute seed evenly over entire area by sowing equal quantities in two opposite directions.
   c. Seeding shall not be performed when the wind velocity exceeds 5 miles per hour, or is determined detrimental to the uniform distribution of seed.

3. All materials must be available for inspection prior to application.

4. Restore prepared areas to specified condition if eroded or otherwise disturbed after fine grading and prior to planting.

5. All landscaping will be covered by a warranty for a period of one to two years or until accepted by the City Engineer.

    a. Seeded Areas. At the end of the warranty period, seeded areas shall have 70 percent coverage of full, established growth; free of all noxious weeds.

    b. At end of warranty period, replant areas showing root growth failure, bare or thin spots, and eroded or settled areas within 10-days of written notice. Plant with materials of like kind and size, planted in the next growing season, with a new warranty commencing on the date of planting. All corrective work will be at no additional cost to the Owner.

END O SECTION

SECTION □□□□□

LANDSCAPING

PART □ GENERAL

□□□□ SECTION INCLUDES

A. Preparation of subsoil.

B. Fertilizing.

C. Seeding

D. Maintenance.

□□□□ RELATED SECTIONS

A. Section 02112 - Trenching: Preparation of subsoil and placement of topsoil in preparation for the work of this section.

B. Section 02100- Roadway and General Excavation: Slopes protection and topsoil placement.

□□□□ RE□ERENCES

A. Standards of Official Seed Analysis of North America.

B. ANSI Z60.1, American Standard for Nursery Stock.

□□□□ DE□INITIONS

A. Weeds: Includes Cheatgrass (Bromus Tectorum), Dandelion, Jimsonweed, Quackgrass, Horsetail, Morning Glory, Rush Grass, Mustard, Lambsquarter, Chickweed, Cress, Crabgrass, Canadian Thistle, Nutgrass, Poison Oak, Blackberry, Tansy Ragwort, Johnson Grass, Poison Ivy, Nut Sedge, Nimble Will, Bindweed, Bent Grass, Wild Garlic, Perennial Sorrel, and Phragmites.

□□□□ SUBMITTALS

A. See appropriate sections of the Contract Documents for submittal procedures.

B. Certification: Submit certification of grass species and location of seed source.

C. Maintenance Data: Include maintenance instructions, cutting method and maximum height; types, application frequency and recommended coverage of fertilizer.

D. NOI permit and Erosion Control Plan per section 01700.

□□□□ □UALITY ASSURANCE

A. Seeds.

1. Vendor: Company specializing in supplying seed with a minimum five years experience, and certified by the State of Utah.

2. Installer Qualifications: Company approved by the seed vendor.

B. Trees and Shrubs.

1. Vendor: Company specializing in growing and cultivating trees and shrubs with a minimum five years experience, and certified by the State of Utah.

2. Installer Qualifications: Company specializing in installing and planting trees and approved by tree supplier.

REGULATORY REQUIREMENTS

A. Comply with regulatory agencies for fertilizer and herbicide composition.

B. Provide certificate of compliance from authority having jurisdiction indicating approval of fertilizer and herbicide mixture.

MAINTENANCE SERVICE

A. Furnish service and maintenance of seeded or sodded areas up to the end of warranty and until accepted by the City Engineer.

PART PRODUCTS

MATERIALS

A. Lawn Seed.

1. Lawn Grass Mix. Lawn grass seed shall be fresh, clean, new crop seed; mechanically premixed to the specified proportions. Lawn grass seed shall be a blend of the following seeds: Kentucky Bluegrass, 80% as approved by City Engineer, Rye Grass, 20%; planted at a rate of 3.0 pounds per 1000 square feet.

2. Standards. Grass seeds shall comply with “Standards of Official Seed Analysis of North America”; for 85% purity, 80% germination and 1% (maximum) weed seed (68% PLS).

3. Delivery. Seed shall be delivered to the site in original unopened containers, bearing the dealer’s guaranteed analysis and germination percentage and a certificate or stamp or release by a County agriculture commissioner.

4. Seed to be applied by hydraulic method shall be mixed with wood fiber mulch, fertilizer and polymer at 50 pounds per 100 square feet.

5. Fertilizer: Recommended for grass, with fifty percent of the elements derived from organic sources; of proportion necessary to eliminate any deficiencies of topsoil, as indicated by analysis.

6. Water: Clean, fresh and free of substances or matter which could inhibit vigorous growth of grass.

B. Trees: Shall be Grade A trees of the type acceptable to the City Engineer; withdeciduous 2 ½” caliper, ornamental 1 ½” caliper, and Evergreen 6’ tall. Trees shall be grown in climatic conditions similar to those in locality of the Work; with branching, configuration and cane requirements as indicated in ANSI Z60.1, American Standard for Nursery Stock. Provide trees of normal growth and uniform heights, according to the species, with straight trunks and well developed leaders, laterals and roots. Provide legible labels attached to tree indicating botanical genus, species, and size. The following trees are acceptable to the City of Saratoga Springs for Landscaping Dedicated to the City, other trees may be considered on a case by case basis:

Recommended Tree & Plant Palate

PUBLIC PLANTING						
	SPECIFIC NAME (BOTANICAL)	**TYPE**	**SIZE** (H X SPREAD)	**PATTERN**	**PRODUCE/ COLOR IN BLOOM**	**SPECIAL INSTRUCTIONS**
Large Shade Trees > 50 ft	Bloodgood London Plane Tree *(Platanu Acerifolia 'Bloodgood')*		60' x 60'	Allee Regular Clustered	1/3" berry/ N/A	Tolerates Salt, Yellow fall color
	Bur Oak* *(Quercus Macrocarpa)*		60' x 60'	Allee Regular	Nut/ N/A	Tolerant of Urban conditions, soil adaptable
	Sycamore Maple *(Acer psuedoplatanus)*		60' x 40'	Allee Regular	Samara/ N/A	Tolerates alkaline and salt conditions
	Silver Linden* *(Tilia Tomentosa)*		60' x 40'	Allee Regular Clustered	N/A / Yellow green	Green leaf surface, silver underside. Tolerant of heat/drought.
	Expresso Kentucky Coffee Tree *(Gymnocladus dioica 'Expresso')*		60' x 40'	Allee Regular Clustered	1/3" berry / N/A	Tolerates wide range of conditions/salt
	Cimmaron Green Ash* *(Franxinus pennsylvanica 'Cimmarron')*		60' x 30'	Allee Regular Clustered	Samara / N/A	Tolerant of Urban conditions, soil adaptable
	Emerald Queen Norway Maple* *(Acer platanoides 'Emeral Queen')*		50' x 40'	Allee Regular Clustered	Smara/ N/A	Tolerant of Urban conditions, soil adaptable
	Accolade Hybrid Elm *(Ulmus x "Accolade')*		50' x 40'	Allee Regular	Samara / N/A	Pollution/ Salt/ drought tolerant
	Crimson King Maple *(Acer Platanoides 'Crimson King')*		45' x 40'	Allee Regular Clustered	Samara/ N/A	Well adapted to extremes in soils. Withstands hot, dry condition.
	Magyar Maidenhair Tree* *(Ginko Biloba 'Magyar')* **Male Species Only**		50' x 30'	Regular, Clustered	N/A / N/A	Tolerates high ph, salt, urban conditions. Excellent yellow fall color.
	Catalpa *(catalpa speciosa)* **Podless Only**		50' x 30'	Allee Regular Clustered	White	Attractive flower, withstands dry, alkaline conditions.
	Austrian Pine *(Pinus nigra)*		50' x 30'	Clustered	Cone	Can withstand urban conditions and alkaline soils.
	Scotch Pine *(Pinus sylvestris)*		40' x 30'	Clustered	Cone	Can withstand urban conditions and alkaline soils.
	Cottonwood *(Populus sargentii)* **cottonless variety**		80' x 50'	Regular	N/A / N/A	Great fall color. Tolerant of poor soils/salt/drought
	Globe Willow *(Salix matsudana umbraculifera)*		40' x 40'	Allee Regular Clustered	N/A / N/A	Prefers wet conditions. Salt tolerant.
	English Columnar Oak *(Quercus robur "fastigiata')*		60' x 15'	Allee Regular Clustered	Acorn/ Red	Prefers well drained soil and alkaline conditions.

*-Denotes compatibility for use as a street tree.

PUBLIC PLANTING						
	SPECIFIC NAME (BOTANICAL)	**TYPE**	**SIZE** (H X SPREAD)	**PATTERN**	**PRODUCE/ COLOR IN BLOOM**	**SPECIAL INSTRUCTIONS**
Medium Shade Trees	Queen Elizabeth Hedge Maple (*Acer Campestre 'Queen Elizabeth")*		45' x 45'	Regular Clustered	N/A / N/A	Pollution/salt/ drought tolerant

45 ft to 50 ft	Rocky Mountain Juniper (*Juniperus scopulorum*)		40’ x 15’	Regular Clustered	Cone / N/A	Drought tolerant/native
	Shangri-La Maidenhair Tree* (*Ginko biloba ‘Shangri-la’*)		45’ x 25’	Allee Regular Clustered	Seed / N/A	Males should be planted, excellent yellow fall color
	Armstrong Maple* (*Acer freemanii)*		45’ x 15’	Allee Regular Clustered	Samara / N/A	Distinctly upright, soil adaptable
	Common Hackberry* (*Celtis occidentalis*)		40’ x 30’	Regular Clustered	1/3” Berry / N/A	Tolerates drought/pollution/poor soils/ salt
	Little Leaf Linden* (*Tilia cordata*)		40’ x 25’	Allee Regular Clustered	N/A / Yellow green	Tolerant of urban conditions, soil adaptable
	Sensation Box Elder* (*Acer negundo ‘Sensation’*)		30’ x 30’	Allee Regular Clustered	Samara / N/A	Tolerant of urban conditions/ poor soils/ salt
	Thornless Honeylocust* (*Gleditsia triaacanthos var. inermis*)		30’ x 25’	Regular Clustered	Samara / N/A	Brilliant red fall color
	Gamble Oak (*Quercus gambelii*)		25’ x 20’	Clustered	Acorns / N/A	Native/great red fall color/
	Big Tooth Maple (*Acer grandidentatum*)		30’ x 20’	Clustered	Samara / N/A	Great red fall color/requires well drained soil
	Sky Rocket Juniper (*Juniperus scopulorum ‘Skyrocket’*)		20’ x 3’	Allee Regular Clustered	Cones / N/A	Drought tolerant/withstands alkaline conditions
	Frontier Elm (*Ulmus x ‘frontier’*)		30’ x 25’	Allee Regular Clustered	N/A / N/A	Resistant to Dutch Elm disease

*-Denotes compatibility for use as a street tree.

PUBLIC PLANTING						
	SPECIFIC NAME (BOTANICAL)	**TYPE**	**SIZE** (H X SPREAD)	**PATTERN**	**PRODUCE/ COLOR IN BLOOM**	**SPECIAL INSTRUCTIONS**
Small Shade Trees <25 ft	Service Berry *(Amelanchia sp.)*		25’ x 20’	Regular, Clustered	Nut/ White	Cream white fragrant flower, tolerates poor soils.
	Tatarian Maple * *(Acer Tataricum)*		25’ x 20’	Clustered	Samara / N/A	Tolerates cold, drought, high ph soils. Excellent red fall color.
	Lavalle Hawthorn* *(Crataegus x lavallei)*		25’ x 20’	Clustered	1/2” berry (persistent) white	Bronzy or coppery-red fall color with bright red persistent berries into winter.
	Canada Red Chokecherry *(Prunus virginiana ‘Canada Red’)*		25’ x 20’	Allee, Regulalr, Clustered	1/3” berry white	Soil adaptable, tolerant of urban conditions, very attractive foliage.
	Amur Maackia *(Maackia amurensis)*		20’ x 20’	Allee, Regular, Clustered	1/3” berry / white	Bronzy or coppery-red fall color with bright red persistent berries into winter.
	Flowering Plum *(Prunus cerasifera ‘Thundercloud’)*		20’ x 15’	Allee, Regular, Clustered	N/A / pink flowers	Purple leaf. Tolerant of urban conditions.
	Crabapple (Malus ‘Indian Magic’)		20’ x 20’	Allee, Regular, Clustered	Orange berry/ Deep pink blossoms	Persistent fruit. Tolerates urban conditions.

	Crabapple *(Malus 'prairifire')*		20' x 20'	Allee, Regular, Clustered	Red berry/ Red Blossoms	Persistent fruit. Tolerates urban conditions.

*-Denotes compatibility for use as a street tree.

PUBLIC PLANTING						
	SPECIFIC NAME (BOTANICAL)	**TYPE**	**SIZE** (H X SPREAD)	**PATTERN**	**PRODUCE/ COLOR IN BLOOM**	**SPECIAL INSTRUCTIONS**
Hedge	Karl Foerster Feather Reed Grass (*Calamagrostis x acutiflora 'Karl Foerster'*)		4'	Formal Massing	Seed heads/ White/Gold	Very attractive as a hedge in formal massings
	Blue Mist Spirea (*Caryolteris x clandonenesis*)		3 – 5'	Formal Massing	N/A / Blue/Purple	Flowers in summer/early fall
	Rubber Rabbit Brush (*Chrysothamnus nauseosus)*		4'	Informal Grouping	N/A / Yellow	Yellow fall cover/seeds and cover for birds
	Red Osier Dogwood (*Cornus sericea*)		8 – 15'	Informal Grouping	White berries / White	Attractive winter red twigs
	Hedge Cotoneaster (Cotoneaster lucida)		4 – 6'	Informal Grouping	Black berries / White	Dark green lustrous leaves in summer
	Mormon Tea (*Ephedra nevadensis*)		2 – 4'	Informal Grouping	N/A / N/A	Drought tolerant/evergreen
	Forsythia (*Forsythia*)		4 – 6'	Formal Massing	N/A / Yellow	Early spring flowers are powerful in large massing
	Rose of Sharron (Hibiscus syriacus)		6 – 12'	Formal Massing	N/A / White/Pink/ Purple/Blue	Showy flowers in summer
	Utah Honeysuckle (*Lonicera utahensis*)		3 – 5'	Formal Massing	Small red berries / white	Traditional pioneer plant
	Maiden Hair Grass (*Miscanthus sinensis*)		6'	Formal Massing	Seed heads / Bronze/Purple	Very attractive as a hedge in formal massings.
	Heavy Metal Switch Grass (*Panicum virgatum 'Heavy Metal'*)		5'	Formal Massing	Seed heads / gold	Upright/stiff habit
	Mock Orange (*Philadelphus coronarius*)		8'	Formal Massing	N/A / White	Traditional pioneer plant, fragrant flowers
	Purple Leaf Sand Cherry (*Prunus x cistena*)		8'	Formal Massing	N/A / White	Red/purple leaves
	Squawbush Sumac (*Rhus trilobata*)		4 – 6'	Informal Grouping	Small red pubescent berries / White	Excellent red fall color
	Golden Currant (*Ribes aureum*)		3'	Formal Massing	Yellow spring berries / Yellow	Red fall color/fruit for birds
	Wild Rose (*Rosa woodsii*)		2 – 6'	Informal Grouping	Rosehips / Pink/magenta	Drought tolerant
	Sutherland Gold Elderberry (*Sambucus racemosa 'Sutherland Gold'*)		8'	Formal Massing	Red/Black berries / White	Edible fruit/attractive yellow foliage
	Snow Berry (*Symphoricarpas alba*)		3'	Informal Grouping	White berries / White	Showy white berries
	Amur Maple (*Acer ginnala*)		10' - 20'	Formal Massing	Samara / N/A	Excellent Red Fall Color
	Utah Serviceberry (*Amelanchier utahensis*)		6 – 15'	Informal Grouping	Red/purple/ black pome / White	Important food source for wildlife
	Boxwood (*Buxus sempervirens*)		2 – 4'	Formal Massing	N/A / N/A	Evergreen shrub
	River Birch (*Betula occidentalis 'font clump'*)		15 – 20'	Informal Cluster	Catkin / N/A	Wet conditions/ Attractive red bark
	Hicks Yew (*Taxus x media*)		4 – 10'	Formal Massing	N/A / N/A	Evergreen shrub
	American Cranberry Bush Viburnum (*Viburnum trilobum 'Bailey Compact'*)		4'	Formal Massing	N/A / N/A	Rounded formal habit

PUBLIC PLANTING						
	SPECIFIC NAME (BOTANICAL)	**TYPE**	**SIZE** (H X SPREAD)	**PATTERN**	**PRODUCE/ COLOR IN BLOOM**	**SPECIAL INSTRUCTIONS**
Ground Cover	Bugleweed *(Ajuga)*		4”	Formal Massing	N/A / Blue/purple	Many cultivars are well adapted to region.
	Basket of Gold *(Alyssum)*		8” to 12”	Informal Grouping	N/A / Yellow Flower	Early spring bloomer
	Compinkie Rockcress *(Arabis alpine ‘Compinkie’)*		6”	Informal Grouping	N/A / Deep Rose	Evergreen foliage
	Kinnikinnik *(Arctostaphylos uva ursi)*		6” to 8”	Informal Grouping	Red Berries/ N/A	Evergreen, excellent red fall color.
	Rockcress *(Aubrieta)*		4” to 6”	Formal Massing	N/A / Magenta	Drought tolerant once established.
	Chocolate Flower *(Berlandiera lyrata)*		18”	Informal Grouping	N/A / Yellow	Drought tolerant once established.
	Poppy Mallow *(Callirhoe involucrata)*		2” to 4”	Informal Grouping	N/A / Magenta	Aggressive spreader. Attractive when paired with Berlandiera
	Snow in Summer *(Cerastium arvense)*		4” to 6”	Formal Massing	N/A / White	
	Dwarf Tickseed *(Careopsis ‘nana’)*		6” to 8”	Formal Massing	N/A / Gold	Late spring bloomer.
	Hardy Ice Plant *(Delosperma)*		4” to 6”	Informal Grouping	N/A / Varies	
	Yarrow *(Achillea millefolium)*		2’ x 2’	Informal Massing	N/A / Yellow Flowers	Drought tolerant.
	Sulphur Flowers *(Eriogonum umbrellatum aureun)*		5”	Informal Grouping	N/A / Yellow	Summer bloomer
	Goblin Blanket Flower *(Gaillardia ‘Goblin’)*		12”	Informal Grouping	N/A / Yellow/Red	Heavy reseeder
	Mountain Boxwood *(Pachistima myrsinides)*		8”	Informal Grouping	N/A / N/A	Evergreen
	Sedum *(Sedum)*		4” to 12”	Informal Grouping	N/A / Varies	Many cultivars are well adapted to region
	Scarlet Globemallow *(Sphaeralcea coccinea)*		6” to 12”	Informal Grouping	N/A / N/A	
	Lambs Ear *(Stachys Byzantine “Helen Von Stein’)*		8” to 10 “	Informal Grouping	N/A / Rose-purple	
Small Shrub	Silvermound Sage *(Artemesia schmidtiana)*		10” to 12”	Formal Massing	N/A / N/A	Uniform Mounding shape
	Black Sage *(Artemisia nova)*		18”	Informal Grouping	N/A / N/A	Drought tolerant once established.
	Creeping Potentilla *(Potentilla neumanniana)*		12”	Formal Massing	N/A / Yellow	Slow growing creeping form
	Dwarf Mugo Pine *(Pinus Mugo Mops)*		3’ x 3’	Formal Massing	Cone/ N/A	Evergreen
Perennial	Blue Flax (Linum Lewisii)		15”	Formal Massing	N/A / Blue	Heavy reseeder

TESTS

A. Provide analysis of topsoil fill under provisions of Section 01400.

B. Analyze to ascertain percentage of nitrogen, phosphorus, potash, soluble salt content, organic matter content, and pH value.

C. Testing is not required if recent tests are available for imported topsoil. Submit these test results to the testing laboratory for approval. Indicate, by test results, information necessary to determine suitability.

PART □ E□ECUTION

□□□□ E□AMINATION

A. Verify that prepared soil base is ready to receive the work of this section.

□□□□ PREPARATION

A. Prepare sub-grade in accordance with Section 02116.

B. Place topsoil where required.

C. Top of sod or soil to be one-inch below edge of sidewalks, curb & gutter, ball courts, mow strips and other concrete surfaces.

D. Place topsoil to the following compacted thicknesses:
   a. Areas to be seeded with grass: 6 inches.
   b. Areas to be sodded: 4 inches.
   c. Areas for shrub beds: 18 inches.
   d. Areas for flower beds: 12 inches.

□□□□ □ERTILI□ING

A. Apply fertilizer in accordance with manufacturer's instructions.

B. Apply after smooth raking of topsoil and prior to seeding.

C. Apply fertilizer no more than 48 hours before installing erosion control mat and seeding.

D. Lightly water to aid the dissipation of fertilizer.

□□□□ PLANTING SEED

A. Seeding.

   1. Landscaped Areas. Landscaped areas shall be seeded with grass seed and sod, as required, as described herein, and as directed by the City Engineer.

B. Seeding shall not be performed when the wind velocity exceeds 5 miles per hour, or is determined detrimental to the uniform distribution of seed.

C. Till areas to be planted to a depth of not less than 4-inches prior to seeding.

D. Grade planting areas smooth, even surface with a loose, uniformly fine texture. Roll and rake and remove ridges and fill in depressions as required.

E. Moisten prepared seeding area by sprinkling to a depth of six inches before planting; the area shall be surface dry at the time of application. Do not create a muddy soil condition.

F. Seed shall be applied by hydraulic method with a hydro-seeder at the coverage rate recommended by the seed vendor and as accepted by the Engineer. Seed may be applied by broadcast or drilled method at the recommended coverage and as accepted by the Engineer.

G. Rate of Application.

   1. Lawn Grass seed mix shall be applied at rate of 3 pounds per 1000 square feet.

H. All materials must be available for inspection prior to application.

I. Restore prepared areas to specified condition if eroded or otherwise disturbed after fine grading and prior to planting.

PLANTING TREES

A. Trees. Trees shall be planted where and as accepted by the City Engineer.

B. Trees shall be planted during normal planting season.

1. Excavate only for depth of root ball. The excavated area for tree planting shall be at least two times the diameter of the root ball, or as recommended by the supplier.

2. Place trees for final orientation review by the Engineer prior to backfilling the root ball.

3. Installation of trees shall be done according Drawing No. LS-13; and as recommended by the supplier. Backfill material shall be acceptable to the supplier and City Engineer.

4. After installation, trees shall be pruned as required, complying with ANSI A300, and as directed by the supplier.

5. Trees shall be protected as recommended by the supplier and as directed by the Engineer.

C. Trees will be accepted by the City Engineer at the end of warranty period.

LANDSCAPED AREAS

A. Landscaped areas that are to be covered with landscaping bark, rocks or other materials, shall be treated with herbicide to kill weeds to control weed growth.

B. Landscaped areas shall be watered with an acceptable water saving type sprinkler system.

MAINTENANCE RE UIREMENTS OR LANDSCAPED AREAS DURING ARRANTY PERIODS

A. Turf.

1. General: Maintain seeded areas for the warranty period. Supply additional top soil, where necessary and as directed, including areas affected by erosion or settlement.

2. Watering: Water to ensure uniform seed germination and to keep surfaces of soil damp. Apply water slowly so soil will not puddle or crust.

3. Fertilizing:
   a. Fertilize during planting; and two weeks after planting.
   b. Fertilize formulation to be determined from soil analysis taken yearly.

4. Mowing:
   a. Cut lawn grass for the first time when it reaches a height of 3-inches.
   b. After first mowing, water to moisten soil from 3-inches to 5-inches deep.
   c. After first mowing, mow on a 7-day cycle, preferably on Thursdays or Fridays.
   d. Use string trimmers on all hardscape edging, posts, utilities, etc. on the same day as mowing.
   e. Use metal blade edgers against concrete/turf areas one time per month.

5. Grading: Roll when required to remove minor depressions or irregularities.

6. Control Growth of Weeds: Apply herbicides in accordance with manufacturer's instructions. Remedy damage resulting from improper use of herbicides.

a. Apply 2-4-D chemical for control of broadleaf weeds. Apply when conditions are most beneficial for control of weeds, usually mid-April and mid-September.

7. Reseeding: Immediately replace seed to areas which show deterioration or bare spots.

8. Protection: Protect seeded areas with warning signs during maintenance period. When necessary or as directed, erect temporary fences or barriers to control pedestrians.

B. Trees.

1. General: Maintain trees for the warranty period and until accepted by the City Engineer. Supply additional top soil, where necessary and as directed, including areas affected by erosion or settlement.

2. Maintain tree health immediately after planting. Notify Owner of tree watering practice. Trim only dead or broken branches; remove clippings and dead branches from the site. Control diseases.
   a. Prune dead and broken branches only during first year. For deciduous trees, remove branches less than 5 feet above grade during the second year.

3. Watering:
   a. After planting, keep ground continuously moist until healthy growth is established.
   b. Thereafter, deep root water trees two times per month during first year of establishment.
   c. Deep root watering is required for coniferous trees during winter months.

4. Weeding: Uproot and remove weeds completely. Do not allow growth and germination of weed seeds. Fill in large holes caused by weeding with top soil and rake smooth.
   a. Maintain weed free tree rings with 3-inch mulch depth. Tree rings to have 2 foot radius.

5. Protection: Protect trees against traffic by erecting temporary barriers and warning signs. Replant damaged trees.

6. Maintain wrappings, guys, turnbuckles, and stakes. Adjust turnbuckles to keep wire tight. Repair or replace accessories where required and as directed.

C. Aeration. Aerate turf areas a minimum of two times per year; in the spring and in the fall, as directed by the City Engineer. Core aerate; leave cores and break up if needed and as directed.

D. Irrigation System.

1. Repair all breaks immediately.

2. Perform weekly inspections and make needed adjustments.

3. Make seasonal adjustments to controllers as needed and as directed.

E. Erosion and Settlement. Repair trench settling, ruts, and rivulets caused by mowing equipment, irrigation and/or precipitation immediately, as directed.

ARRANTY

A. All landscaping will be covered by a warranty for a period of one to two years or until accepted by the City Engineer.

B. Seeded Areas. At the end of the warranty period, seeded areas shall have a 100 percent coverage of full, established growth; free of all noxious weeds.

1. At end of warranty period, replant areas showing root growth failure, bare or thin spots, and eroded or settled areas within 10-days of written notice. Plant with materials of like kind and size, planted in the next growing season, with a new warranty commencing on the date of planting. All corrective work will be at no additional cost to the Owner.

C. Trees. Warranty for trees shall include death, unhealthy conditions, or if trees die from poor planting practices. Replace any unsatisfactory or dead tree within 10-days of written notice. Provide replacement trees of same size and species, planted in the next growing season, with a new warranty commencing on the date of planting. All corrective work will be at no additional cost to the Owner.

END O□ SECTION

SECTION □□□□□

RESTORING NATI□E AREA

PART □ GENERAL

□□□□ SECTION INCLUDES

A. Preparation of subsoil.

B. Fertilizing.

C. Seeding

D. Maintenance.

□□□□ RELATED SECTIONS

A. Section 02112 - Trenching: Preparation of subsoil and placement of topsoil in preparation for the work of this section.

□□□□ RE□ERENCES

A. Standards of Official Seed Analysis of North America.

B. ANSI Z60.1, American Standard for Nursery Stock.

□□□□ DE□INITIONS

A. Weeds: Includes Cheatgrass (Bromus Tectorum), Dandelion, Jimsonweed, Quackgrass, Horsetail, Morning Glory, Rush Grass, Mustard, Lambsquarter, Chickweed, Cress, Crabgrass, Canadian Thistle, Nutgrass, Poison Oak, Blackberry, Tansy Ragwort, Johnson Grass, Poison Ivy, Nut Sedge, Nimble Will, Bindweed, Bent Grass, Wild Garlic, Perennial Sorrel, and Phragmites.

□□□□ SUBMITTALS

A. See appropriate sections of the Contract Documents for submittal procedures.

B. Certification: Submit certification of grass species and location of seed source.

C. Maintenance Data: Include maintenance instructions, cutting method and maximum height; types, application frequency, and recommended coverage of fertilizer.

□□□□ □UALITY ASSURANCE

A. Seeds.

1. Vendor: Company specializing in supplying seed with a minimum five years experience, and certified by the State of Utah.

2. Installer Qualifications: Company approved by the seed vendor.

B. Trees and Shrubs.

1. Vendor: Company specializing in growing and cultivating trees and shrubs with a minimum five years experience, and certified by the State of Utah.

2. Installer Qualifications: Company specializing in installing and planting trees and approved by tree supplier.

REGULATORY REQUIREMENTS

A. Comply with regulatory agencies for fertilizer and herbicide composition.

B. Provide certificate of compliance from authority having jurisdiction indicating approval of fertilizer and herbicide mixture.

MAINTENANCE SERVICE

A. Furnish service and maintenance of seeded or sod areas up to the end of warranty and until accepted by the City Engineer.

PART 2 PRODUCTS

MATERIALS

A. Restoring Native Grass Seed.

1. Native Grass Mix. Native grass seed shall be fresh, clean, new crop seed; mechanically premixed to the specified proportions. Native grass seed shall be a blend of the following seeds:

	PLANTING RATE (Pounds of Pure Live Seed / Acre)		
TYPE I: Grass & Wildflower Mix	BROADCAST	DRILLED	PERCENTAGE
Slender Wheat Grass (Agropyron trachucaulum)	2.75	2.06	13.75 %
Bluebunch Wheat Grass (Agropyron spicatum)	2.75	2.06	13.75 %
Sheep Fescue (Festuca ovina)	0.80	0.60	4.00 %
Sandberg Bluegrass (Poa sandbergii)	0.50	0.38	2.50 %
Western Wheat Grass (Agropyron smithii)	2.75	2.06	13.75 %
Green Needlegrass (Stipa viridula)	2.75	2.06	13.75 %
Protrate Summer Cypress (Kochia prostata)	1.50	1.13	7.50 %
Blanket flower (Gaillardia aristata)	2.00	1.50	10.00 %
Blue flax (Linum lewisii)	1.50	1.13	7.50 %
Red Mexican Hat (Ratibida columnaris)	0.25	0.18	1.25 %
Basin Bid Sagebrush (Artemisia tridentata tridentata)	0.15	0.11	0.75 %
Rubber Rabbitbrush (Chrysothamnus nauseosus)	0.30	0.23	1.50 %
Winterfat (Ceratoides lanata)	2.00	1.50	10.00 %
Totals	20.0	15.00	100.00 %

TYPE 2: Grass Mix (Tall)	PLANTING RATE PERCENTAGE
Quick Guard (Sterile tricale hybrid)	21.74%
Crested Wheatgrass (Agropyron cristatum)	15.21%
Slender Wheatgrass (Agropyron trachcaulum)	19.57%
Bluebunch Wheatgrass (Agropyron spicatum)	13.04%
Intermediate Wheatgrass (Agropyron intermedium)	13.05%
Green Needlegrass (Stipa virdula)	5.43%
Western Wheatgrass (Agropyron smithii)	5.44%
Sheep Fescue (Fesctuca Ovina)	3.48%
Sandberg Bluegrass (Poa sandbergii)	2.61%
Sand Dropseed (Sporobolus Crytandrus)	0.43%
Totals	100.00%

TYPE 3: Grass Mix (Short)	PLANTING RATE (Pounds of Pure Live Seed / Acre) BROADCAST	PERCENTAGE
Blue Grama (Bouteloua gracilla)	4.0	30.77%
Sheep fescue (festuca ovina)	5.0	38.46%
Sandberg Bluegrass (Poa sandbergii)	4.0	30.77%
Total:	13.0	100.00%

2. Standards. Grass seeds shall comply with "Standards of Official Seed Analysis of North America"; for 85% purity, 80% germination and 1% (maximum) weed seed (68% PLS).

3. Delivery. Seed shall be delivered to the site in original unopened containers, bearing the dealer's guaranteed analysis and germination percentage and a certificate or stamp or release by a County agriculture commissioner.

4. Seed to be applied by hydraulic method shall be mixed with wood fiber mulch, fertilizer and polimer at 50 pounds per 100 square feet.

PART □ E□ECUTION

□□□□ E□AMINATION

A. Verify that prepared soil base is are ready to receive the work of this section.

□□□□ PREPARATION

A. Prepare sub-grade in accordance with Section 02116.

B. Place topsoil where required.

□□□□ PLANTING SEED

A. Seeding.

1. Off-Site Restoration. All off-site work through areas that are covered with native grasses shall be reseeded with native grass seed, as required, as described herein and as directed by the City Engineer.

B. Seeding shall not be performed when the wind velocity exceeds 5 miles per hour, or is determined detrimental to the uniform distribution of seed.

C. Till areas to be planted to a depth of not less than 4-inches prior to seeding.

D. Grade planting areas smooth, even surface with a loose, uniformly fine texture. Roll and rake and remove ridges and fill in depressions as required.

E. Moisten prepared seeding area by sprinkling to a depth of six inches before planting; the area shall be surface dry at the time of application. Do not create a muddy soil condition.

F. Seed shall be applied by hydraulic method with a hydro-seeder at the coverage rate recommended by the seed vendor and as accepted by the Engineer. Seed may be applied by broadcast or drilled method at the recommended coverage and as accepted by the Engineer.

G. Rate of Application.

1. Native Grass seed mix shall be applied at a supplier acceptable rate to obtain 70% growth and acceptance at end of warranty period.

H. All materials must be available for inspection prior to application.

I. Restore prepared areas to specified condition if eroded or otherwise disturbed after fine grading and prior to planting.

□□□□ MAINTENANCE RE□UIREMENTS □OR NATI□E AREA DURING □ ARRANTY PERIODS

A. Furnish service and maintenance of restored area until 70% coverage is established and accepted by the City Engineer.

B. Area must be free of signs of erosion and evasive species.

C. Area must be kept free of litter and mowed and trimmed as required in the fall of each year.

D. Irrigation System may be required in order to obtain an acceptable level of establishment.

E. Irrigation System

1. Repair all breaks immediately.

2. Perform weekly inspections and make needed adjustments.

3. Make seasonal adjustments to controllers as needed and as directed.

F. Erosion and Settlement. Repair trench settling, ruts, and rivulets caused by mowing equipment, irrigation and/or precipitation immediately, as directed.

□□□□ □ ARRANTY

A. All landscaping will be covered by a warranty for a period of one to two years or until accepted by the City Engineer.

B. Seeded Areas. At the end of the warranty period, seeded areas shall have a 70 percent coverage of full, established growth; free of all noxious weeds.

1. At end of warranty period, replant areas showing root growth failure, bare or thin spots, and eroded or settled areas within 10-days of written notice. Plant with materials of like kind and size, planted in the next growing season, with a new warranty commencing on the date of planting. All corrective work will be at no additional cost to the Owner.

END O□ SECTION

SECTION □□□□□

□ENCES AND GATES

PART □ GENERAL

□□□□ SECTION INCLUDES

A. Fence framework, fabric, and accessories.

B. Excavation for post bases; concrete foundation for posts.

C. Manual swing gates and related hardware.

□□□□ RELATED SECTIONS

A. Section 03300 - Cast-In-Place Concrete: Concrete anchorage for posts.

□□□□ RE□ERENCES

A. ASTM A 116 - Standard Specification for Zinc-Coated (Galvanized) Steel Woven Wire Fence Fabric.

B. ASTM A 123/A 123M - Standard Specification for Zinc (Hot-Dip Galvanized) Coatings on Iron and Steel Products.

C. ASTM A 153/A 153M - Standard Specification for Zinc Coating (Hot-Dip) on Iron and Steel Hardware.

D. ASTM A 392 - Standard Specification for Zinc-Coated Steel Chain-Link Fence Fabric.

E. ASTM A 570/A 570M - Standard Specification for Steel, Sheet and Strip, Carbon, Hot-Rolled, Structural Quality.

F. ASTM C 94 - Standard Specification for Ready-Mixed Concrete.

G. ASTM F 567 - Standard Practice for Installation of Chain-Link Fence.

H. ASTM F 1083 - Standard Specification for Pipe, Steel, Hot-Dipped Zinc-Coated (Galvanized) Welded, for Fence Structures.

I. CLFMI CLF 2445 - Product Manual; Chain Link Fence Manufacturers Institute.

J. Use the latest issue of the above reference standards as of the date of the Project.

□□□□ SUBMITTALS

A. See Section 01300 - Administrative Requirements, for submittal procedures.

B. Product Data: Provide data on fabric, posts, accessories, fittings and hardware.

C. Shop Drawings: Indicate plan layout, spacing of components, post foundation dimensions, hardware anchorage, and schedule of components.

D. Project Record Documents: Accurately record actual locations of property perimeter posts relative to property lines and easements.

□□□□ □UALITY ASSURANCE

A. Manufacturer Qualifications: Company specializing in manufacturing products specified in this section, with not less than three years of documented experience.

PART □ PRODUCTS

□□□□ MATERIALS

A. Posts, Rails, Frames and Extension Arms: ASTM F 1083 Schedule 40 hot-dipped galvanized steel pipe, welded construction, minimum yield strength of 25 ksi.

B. Wire Fabric: ASTM A 392 zinc coated steel chain link fabric; with black or green epoxy coating, as approved by the Engineer.

C. Concrete: ASTM C 94; Normal Portland Cement, 2,500 psi strength at 28 days, 3 inch slump; 3/4 inch nominal sized coarse aggregate.

□□□□ COMPONENTS

A. Line Posts: 1.90 inch outside diameter.

B. Corner and Terminal Posts: 2.38 inch outside diameter.

C. Gate Posts: 3.5 inch outside diameter, or as required for gate size.

D. Top and Brace Rail: 1.66 inch outside diameter, plain end, sleeve coupled.

E. Gate Frame: 1.66 inch diameter for welded fabrication.

F. Fabric: 2 inch diamond mesh interwoven wire, 9 gauge thick, top selvage knuckle end closed, bottom selvage twisted tight.

G. Tension Wire: 7 gauge thick steel, single strand.

H. Tension Bar: 3/16 inch thick steel.

I. Tension Strap: 3/16 inch thick steel.

J. Tie Wire: Aluminum alloy steel wire.

K. Barbed Wire: 11 gauge strand, with 4 point barbs at 3 inch spacing.

□□□□ ACCESSORIES

A. Caps: Cast steel galvanized; sized to post diameter, set screw retainer.

B. Extension Arms: provided for all posts where barbed wire is required; to hold 3 strands of barbed wire and designed to withstand 200 pound weight.

C. Fittings: Sleeves, bands, clips, rail ends, tension bars, fasteners and fittings; steel.

D. Gate Hardware: Fork latch with gravity drop; two 180 degree gate hinges per leaf and hardware for padlock.

□□□□ □INISHES

A. Components (Other than Fabric): Galvanized in accordance with ASTM A 123/A 123M, at 1.7 oz/sq ft.

B. Hardware: Galvanized to ASTM A 153/A 153M, 1.8 oz/sq ft coating.

C. Accessories: Same finish as framing.

PART □ E□ECUTION

□□□□ INSTALLATION

A. Install framework, fabric, accessories and gates in accordance with ASTM F 567.

B. Place fabric on outside of posts and rails.

C. Set intermediate posts plumb, in concrete footings with top of footing 2 inches above finish grade. Slope top of concrete for water runoff.

D. Line Post Footing Depth Below Finish Grade: ASTM F 567.

E. Corner, Gate and Terminal Post Footing Depth Below Finish Grade: ASTM F 567.

F. Brace each gate and corner post to adjacent line post with horizontal center brace rail and diagonal truss rods. Install brace rail one bay from end and gate posts.

G. Provide top rail through line post tops and splice with 6 inch long rail sleeves.

H. Do not stretch fabric until concrete foundation has cured 28 days.

I. Stretch fabric between terminal posts or at intervals of 100 feet maximum, whichever is less.

J. Position bottom of fabric 2 inches above finished grade.

K. Fasten fabric to top rail, line posts, braces, and bottom tension wire with tie wire at maximum 15 inches on centers.

L. Attach fabric to end, corner, and gate posts with tension bars and tension bar clips.

M. Install bottom tension wire stretched taut between terminal posts.

N. Do not attach the hinged side of gate to building wall; provide gate posts.

O. Install gate with fabric to match fence. Install three hinges per leaf, latch, catches, drop bolt.

P. Provide concrete center drop to footing depth and drop rod retainers at center of double gate openings.

Q. Provide extension arms and three strands of barbed wire on 6-foot high chain link fences, where required and as directed by the City Engineer.

R. 6-foot high chain link fence with three strands of barbed wire shall be installed around all public facilities, as directed by the City Engineer.

S. Construct concrete mow strips under all fences. Mow strips are to be 12-inch wide, centered on the fence, and 6-inch thick.

□□□□ ERECTION TOLERANCES

A. Maximum Variation from Plumb: 1/4 inch.

B. Maximum Offset from True Position: 1 inch.

C. Components shall not infringe adjacent property lines.

END O□ SECTION

SECTION □□□□□

MISCELLANEOUS E□UIPMENT □OR PLAYGROUNDS AND OTHER AREAS

PART □ GENERAL

□□□□ SECTION INCLUDES

A. Acceptable equipment and materials for playgrounds, open space areas and miscellaneous other areas.

□□□□ SUBMITTALS

A. See Section 01300 - Administrative Requirements, for submittal procedures.

B. Product Data: Provide data on equipment, materials, and appurtenant items.

C. Manufacturer's Certificate: Certify that products meet or exceed specified requirements.

D. Project Record Documents: Record actual locations of installed equipment, materials and appurtenant items as directed by the City Inspector. Identify and describe unexpected variations to subsoil conditions or discovery of uncharted utilities.

□□□□ □UALITY ASSURANCE

A. Perform Work in accordance with City's requirements as described herein.

□□□□ DELI□ERY□STORAGE□AND HANDLING

A. Deliver and store all equipment, materials and appurtenant items in shipping containers with labeling in place.

□□□□ OPERATING AND MAINTENANCE DATA

A. Provide instructions covering full operation, care and maintenance of system and controls; and manufacturer's parts catalog.

B. Instruct City's designated maintenance personnel in the proper maintenance of all equipment, materials, and appurtenant items.

C. Submit 3 copies of written instructions recommending procedures to be established by the City Engineer for the maintenance of the equipment, materials and appurtenant items from year to year.

1. Submit prior to expiration of required one year guarantee period.

2. Provide information in the manuals that include the following:
   a. written index near front of Manual listing location in the Manual of all emergency data regarding the installations;
   b. complete nomenclature of all replaceable parts, their part numbers, current cost, and name and address of the nearest vendor of replacement parts; and
   c. copy of all guarantees and warranties issued on the installation showing all dates of expiration.

PART □ PRODUCTS

□□□□ GENERAL

A. All equipment, materials, and appurtenant items shall be as manufactured by manufacturers acceptable to the City Engineer.

B. Acceptable equipment and materials for playgrounds, open space areas and miscellaneous other areas shall be as listed in the table on page # 02828-3, as acceptable equals.

C. All equipment, materials and appurtenant items shall be reviewed and accepted by the City Engineer prior to installation.

PART □ E□ECUTION

□□□□ GENERAL

A. The Contractor shall furnish all labor, materials and equipment as required to install the equipment, materials and appurtenant items for playgrounds, open space areas, and other miscellaneous areas, as described herein and as shown on the design drawings, as indicated on the submittal drawings, and as acceptable to the City Engineer; and shall furnish and install all supplementary and miscellaneous items, appurtenances, and devices incidental to or necessary for completion of the installations.

B. All material shall be installed according to the manufacturer's written instructions and recommendations.

C. The Contractor shall test the installations, as required and as directed, to assure proper operation.

D. All playground equipment shall be installed by personnel certified by manufacture.

□□□□ E□AMINATION

A. Verify that design drawings conform to project conditions.

□□□□ ELECTRICAL □ ORK

A. All required electrical work shall be done as specified in Division 5.

□□□□ □IELD □UALITY CONTROL

A. A third party, certified playground safety inspector (CPSI) shall perform afield inspection and testing in accordance with Section 01400.
B. The third party audit shall be submitted to the city in accordance with section 01400.

C. If tests indicate that installations do not meet specified requirements, remove installations, replace and retest at no cost to City.

□□□□ OPERATIONAL TESTING

A. Where required, provide the City Engineer or City Inspector with seven days written notice of operational tests.

B. After all repairs or replacements have been made and accepted by the City Engineer or City Inspector, repeat the required tests.

END O□ SECTION

DIVISION 03

CONCRETE

SECTION □□□□□

CAST□IN□PLACE CONCRETE

PART □ GENERAL

□□□□ SECTION INCLUDES

A. Concrete form work.

B. Floors and slabs on grade.

C. Concrete foundation walls and vaults.

D. Concrete reinforcement.

E. Joint devices associated with concrete work.

F. Miscellaneous concrete elements, including equipment pads, thrust blocks, manholes, and other miscellaneous items.

G. Concrete curing.

□□□□ RE□ERENCES

A. ACI 211.1 - Standard Practice for Selecting Proportions for Normal, Heavyweight, and Mass Concrete; American Concrete Institute International.

B. ACI 301 - Specifications for Structural Concrete for Buildings; American Concrete Institute International.

C. ACI 304R - Guide for Measuring, Mixing, Transporting, and Placing Concrete; American Concrete Institute International.

D. ACI 305R - Hot Weather Concreting; American Concrete Institute International.

E. ACI 306R - Cold Weather Concreting; American Concrete Institute International.

F. ACI 308 - Standard Practice for Curing Concrete; American Concrete Institute International.

G. ACI 309R - Guide for Consolidation of Concrete; American Concrete Institute.

H. ACI 318 - Building Code Requirements for Reinforced Concrete and Commentary; American Concrete Institute International.

I. ACI 347 - Guide to Form work for Concrete; American Concrete Institute.

J. ASTM A 185 - Standard Specification for Steel Welded Wire Fabric, Plain, for Concrete Reinforcement.

K. ASTM A 615/A 615M - Standard Specification for Deformed and Plain Billet-Steel Bars for Concrete Reinforcement.

L. ASTM C 31 - Standard Practice for Making and Curing Concrete Test Specimens in the Field.

M. ASTM C 33 - Standard Specification for Concrete Aggregates.

N. ASTM C 39 - Standard Test Method for Compressive Strength of Cylindrical Concrete Specimens.

O. ASTM C 94 - Standard Specification for Ready-Mixed Concrete.

P. ASTM C 143 - Standard Test Method for Slump of Hydraulic Cement Concrete.

Q. ASTM C 150 - Standard Specification for Portland Cement.

R. ASTM C 171 - Standard Specification for Sheet Materials for Curing Concrete.

S. ASTM C 173 - Standard Test Method for Air Content of Freshly Mixed Concrete by the Volumetric Method.

T. ASTM C 260 - Standard Specification for Air-Entraining Admixtures for Concrete.

U. ASTM C 309 - Standard Specification for Liquid Membrane-Forming Compounds for Curing Concrete.

V. ASTM C 494 - Standard Specification for Chemical Admixtures for Concrete.

W. ASTM C 618 - Standard Specification for Coal Fly Ash and Raw or Calcined Natural Pozzolan for Use as a Mineral Admixture in Concrete.

X. ASTM C 881 - Standard Specification for Epoxy-Resin-Base Bonding Systems for Concrete.

Y. ASTM C 1107 - Standard Specification for Packaged Dry, Hydraulic-Cement Grout (Nonshrink).

Z. ASTM C 1116 - Standard Specification for Fiber-Reinforced Concrete and Shotcrete.

AA. ASTM D 994 - Standard Specification for Preformed Expansion Joint Filler for Concrete (Bituminous Type).

AB. ASTM D 1751 - Standard Specification for Preformed Expansion Joint Filler for Concrete Paving and Structural Construction (Non-extruding and Resilient Bituminous Types).

AC. COE CRD-C 572 - Corps of Engineers Specifications for Polyvinylchloride Waterstop; Corps of Engineers.

AD. Use the latest issue of the above reference standards as of the date of the Project.

SUBMITTALS

A. See Section 01300 - Administrative Requirements, for submittal procedures.

B. Product Data & Mix Designs: Submit manufacturers' data on manufactured products and mixes.

C. Samples: Submit one, four inch long samples of waterstops and construction joint devices, as directed.

D. Manufacturer's Installation Instructions: Indicate installation procedures and interface required with adjacent construction for concrete accessories.

E. Project Record Documents: Accurately record actual locations of embedded utilities and components that will be concealed from view upon completion of concrete work.

UALITY ASSURANCE

A. Perform work of this section in accordance with ACI 301 and ACI 318.

B. Acquire cement from same source and aggregate from same source for entire project.

C. Follow recommendations of ACI 305R when concreting during hot weather.

D. Follow recommendations of ACI 306R when concreting during cold weather.

PART □ PRODUCTS

□□□□ □ORM □ ORK

A. Form Materials: Contractor's choice of standard products with sufficient strength to withstand hydrostatic head without distortion in excess of permitted tolerances.

1. Form Facing for Exposed Finish Concrete: Contractor's choice of materials that will provide smooth, stain-free final appearance.

2. Form Coating: Release agent that will not adversely affect concrete or interfere with application of coatings.

3. Form Ties: Snap-Off type that will leave no metal within 1-1/2 inches of concrete surface. Use of tie wire as form ties will not be permitted.

□□□□ REIN□ORCEMENT

A. Reinforcing Steel: ASTM A 615/A 615M Grade 60 (420).

1. Deformed billet-steel bars.

2. Unfinished.

B. Welded Steel Wire Fabric: ASTM A 185, plain type.

1. Coiled Rolls or flat sheets.

2. Mesh Size and Wire Gage: As indicated on drawings.

C. Reinforcement Accessories:

1. Tie Wire: Annealed, minimum 16 gage.

2. Chairs, Bolsters, Bar Supports, Spacers: Sized and shaped for adequate support of reinforcement during concrete placement.

3. Provide galvanized or plastic coated steel components for placement within 1-1/2 inches of weathering surfaces.

□□□□ CONCRETE MATERIALS

A. Cement: ASTM C 150, Type IIA - Air Entraining Portland type.

B. Cement: ASTM C 150, Type V - Sulfate Resistant Portland type when exposed to sewage.

C. Fine and Coarse Aggregates: ASTM C 33.

D. Fly Ash: ASTM C 618, Class F.

E. Calcined Pozzolan: ASTM C 618, Class N.

F. Water: Clean and not detrimental to concrete.

G. Synthetic Fiber Reinforcement: Comply with ASTM C 1116; 1/2 inch length.

ADMIXTURES

A. Air Entrainment Admixture: ASTM C 260.

B. Chemical Admixtures: ASTM C 494, Type D - Water Reducing and Retarding.

1. Provide products manufactured by Sika Chemical Corporation or acceptable equal.

CONCRETE ACCESSORIES

A. Epoxy Bonding System: ASTM C 881, type as required by project conditions.

B. Non-Shrink Grout: ASTM C 1107; premixed compound consisting of non-metallic aggregate, cement, water reducing and plasticizing agents.

1. Minimum Compressive Strength at 48 Hours: 2,400 psi.

2. Minimum Compressive Strength at 28 Days: 7,000 psi.

C. Moisture-Retaining Cover: ASTM C 171; clear polyethylene or white burlap-polyethylene sheet.

D. Liquid Curing Compound: ASTM C 309, Type 1, with white pigment.

JOINT DEVICES AND MATERIALS

A. Waterstops: PVC type, COE CRD-C 572.

B. Joint Filler: ASTM D 1751; use full depth, Asphalt impregnated fiberboard or felt, 1/2 inch thick; tongue and groove profile.

C. Hydrophilic Waterstops: DuraJoint Expand-Tite EXP 100, as manufactured by Four Seasons Construction Products, Inc., or acceptable equal; of the recommended type and size.

1. Primer: as recommended by the manufacturer.

CONCRETE MIX DESIGN

A. Proportioning Normal Weight Concrete: Comply with ACI 211.1 recommendations.

B. Admixtures: Add acceptable admixtures as recommended in ACI 211.1 and at rates recommended by manufacturer.

C. Fibrous Reinforcement: Where indicated, add to mix at rate of 1.5 pounds per cubic yard, or as recommended by manufacturer for specific project conditions.

D. Normal Weight Concrete:

1. Compressive Strength, per ASTM C 39 at 28 days: 4,000 psi.

2. Fly Ash Content: Maximum 15 percent of cementitious materials by weight.

3. Calcined Pozzolan Content: Maximum 10 percent of cementitious materials by weight.

4. Cement Content: Minimum 592.2 pound per cubic yard; 6.3 bag mix.

5. Water-Cement Ratio: Maximum 48 percent by weight.

6. Total Air Content: 4 to 8 percent for concrete exposed to freezing and thawing; and 2 to 4 percent for other concrete; per ASTM C 173.

7. Maximum Slump: 4 to 2 inches for structures; 3 to 1 1/2 inches for blocks and pavement.

8. Maximum Aggregate Size: one inch.

MI ING

A. Transit Mixers: Comply with ASTM C 94.

B. During hot weather or under other conditions contributing to rapid setting of concrete, mixing times will be reduced as follows:

1. When air temperature is between 85 and 90 degrees (F), reduce mixing time and delivery time from 90 minutes to 75 minutes.

2. When air temperature is above 90 degrees (F), reduce mixing time and delivery time to 60 minutes.

C. Provide batch ticket for each batch used in the work. Ticket shall indicate project identification name and number, date, mix type, mix time, quantity, and amount of water added.

PART E ECUTION

E AMINATION

A. Verify lines, levels, and dimensions before proceeding with work of this section.

PREPARATION

A. Form work: Comply with requirements of ACI 301. Design and fabricate forms to support all applied loads until concrete is cured, and for easy removal without damage to concrete.

B. Forms shall be full depth, mortar tight, properly aligned, as indicated, to produce concrete surfaces meeting the surface requirements specified herein.

C. Forms shall be constructed so they can be removed without hammering on or prying against concrete, and without damaging concrete in any way.

D. Verify that forms are clean before applying release agent.

E. Coordinate placement of joint devices with erection of concrete form work and placement of form accessories.

F. Prepare previously placed concrete by cleaning with steel brush and applying bonding agent in accordance with manufacturer's instructions.

G. In locations where new concrete is doweled to existing work, drill holes in existing concrete, fill holes with epoxy bonding agent, and insert steel dowels.

H. The Engineer's review of form work will not relieve the Contractor from any responsibility as to the adequacy of the form work, shoring and bracing design. All form work installed by the Contractor shall be solely at his risk. The Engineer's review will not lessen or diminish the Contractor's liability.

I. Alignment and Tolerances. Form work shall be designed and constructed so that concrete surfaces of finished structures will comply with the tolerances specified in ACI 347; and will conform to the following:

1. Vertical Alignment: maximum allowable variation, from bottom to top of a wall, is plus or minus 3/8 inch.

2. Plumb: maximum allowable variations as follows:
   a. In plumb and surfaces of columns and walls is plus or minus 1/4 inch in any 10-feet of length; and a

maximum of one-inch for entire length.

b. In plumb for exposed corner, control-joint grooves, or other conspicuous lines is plus or minus 1/4 inch in any 20-feet of length; and a maximum of 1/2-inch for the entire length.

3. Wall Thickness: shall not vary more than minus 1/8 inch or plus 1/2 inch.

4. Level or Grade: maximum variation from level or grade indicated shall not exceed plus or minus 1/4 inch in any 10-feet of length; or plus or minus 3/8-inch in any 20-feet of length.

5. Distance: maximum variation in distance between walls, columns, or other members shall not exceed plus or minus 1/4 inch in any 10-feet of length; and not more than one-inch total variation.

INSTALLING REINFORCEMENT

A. Comply with requirements of ACI 301. Clean reinforcement of loose rust and mill scale, and accurately position, support, and secure in place to achieve not less than minimum concrete coverage required for protection.

B. Install wire fabric in maximum possible lengths, and offset end laps in both directions. Splice laps with tie wire.

C. Verify that anchors, seats, plates, reinforcement and other items to be cast into concrete are accurately placed, positioned securely, and will not interfere with concrete placement.

PLACING CONCRETE

A. Place concrete in accordance with ACI 304R.

B. Place concrete for floor slabs in accordance with ACI 302.1R.

C. Notify City Engineer or Inspector not less than 24 hours prior to commencement of placement operations. No concrete shall be placed until all form work, construction joints, reinforcing steel, and other items have been completed and accepted by the Engineer.

D. Before placing concrete, inspect and complete form work installations, reinforcing steel placement, and items to be embedded or cast-in.

E. Notify other crafts involved in ample time to permit installation of their work; cooperate with other trades in setting such work

F. All dirt, chips, sawdust, debris, mud, water and other foreign matter shall be removed from within forms or within excavated areas adjacent to forms before any concrete is placed.

G. Ensure reinforcement, inserts, waterstops, embedded parts, and formed construction joint devices will not be disturbed during concrete placement.

H. Separate slabs on grade from vertical surfaces with 1/4 inch thick joint filler.

I. Install joint devices in accordance with manufacturer's instructions.

J. Concrete shall be conveyed from mixer to forms as rapidly as possible within specified time limits; and by methods that will prevent segregation of concrete mix.

K. Concrete shall be placed within 15 minutes after it has been discharged from mixer.

L. Provide adequate equipment and labor for conveying concrete to ensure a continuous flow of concrete at delivery point.

M. Concrete shall be deposited as close as possible to its final position in the forms; there shall be no vertical

drop greater than 8 feet, except where suitable equipment is provided to prevent segregation of concrete and where specifically authorized.

N. Deposit concrete so that it will be effectively consolidated in horizontal layers not more than 12 inches thick; except that all slabs shall be placed in single layer.

O. Where placement consists of several layers, place each layer while the preceding layer is still plastic to avoid cold joints, and within 30 minutes after placement of preceding layer.

P. Maintain records of concrete placement. Record date, location, quantity, air temperature, and test samples taken.

Q. Place concrete continuously between predetermined expansion, control, and construction joints.

R. Do not interrupt successive placement; do not permit cold joints to occur.

S. Do not use concrete which becomes non-plastic or unworkable, does not meet the required quality control limits, or which has become contaminated by foreign materials. Do not use re-tempered concrete. Remove rejects concrete from the project site and dispose of in an acceptable manner.

T. Place floor slabs in checkerboard or saw cut pattern indicated.

U. Saw cut joints within 24 hours after placing. Use 3/16 inch thick blade, cut into 1/4 depth of slab thickness.

V. Screed floors and slabs on grade level, maintaining surface flatness of maximum 1/4 inch in 10 ft.

W. Concrete shall not be placed in water; nor shall water be allowed to rise over freshly placed concrete until the concrete has set sufficiently to prevent its being damaged thereby.

CONSOLIDATING

A. Consolidate each layer of concrete immediately after placement with internal vibrators in accordance with ACI 309, except for slabs 4 inches thick or less.

B. Vibrators shall be inserted vertically at uniform spacing over entire area of placement; spacing to be approximately 1-1/2 times radius of action of vibrator. Vibrators shall penetrate rapidly to bottom of layer being placed, and at least 6 inches into the preceding layer.

C. Vibrators shall be supplemented by hand spading adjacent to forms on exposed surfaces. Concrete shall be compacted and well worked into all corners and angles in forms, and around reinforcement and embedded items.

FORM REMOVAL

A. Forms shall be removed in a manner that will prevent damage to concrete and ensure complete safety of the structure.

B. Forms shall not be removed until approval is given by the City Engineer or Inspector.

C. Form work for columns, walls and other members not supporting weight of concrete may be removed when concrete has attained sufficient strength to resist damage from removal operation; but not before at least 48 hours after concrete placement.

D. Form work for columns, walls, roof slabs, and other members supporting weight of concrete may not be removed until concrete has attained sufficient strength to carry imposed loads as determined by compression tests, and when directed by the City Engineer or Inspector.

CONCRETE FINISHING

A. Repair and patch surface defects, including tie holes, on all surfaces immediately after removing form work.

B. Unexposed Form Finish: Rub down or chip off fins or other raised areas 1/4 inch or more in height.

C. Exposed Form Finish: Rub down or chip off and smooth fins or other raised areas 1/4 inch or more in height. Provide finish as follows:

1. Smooth Rubbed Finish: Wet concrete and rub with Carborundum brick or other abrasive, not more than 24 hours after form removal.

2. Grout Cleaned Finish: Wet areas to be cleaned and apply grout mixture by brush or spray; scrub immediately to remove excess grout. After drying, rub vigorously with clean burlap, and keep moist for 36 hours.

D. Concrete Slabs: Finish to requirements of ACI 302.1R, and as follows:

1. Wood float surfaces that will receive trowel finish or other finishes, as indicated.

2. Steel trowel surfaces that will be left exposed.

3. Broom finish exterior concrete to provide non-slip finish.

E. In areas with floor drains, maintain floor elevation at walls; pitch surfaces uniformly to drains at 1:50 nominal.

F. All exposed edges to be chamfered; 3/4 inches minimum.

CURING AND PROTECTION

A. Comply with requirements of ACI 308. Immediately after placement, protect concrete from premature drying, excessively hot or cold temperatures, and mechanical injury.

B. Maintain concrete with minimal moisture loss at relatively constant temperature for period necessary for hydration of cement and hardening of concrete.

1. Normal concrete: Not less than 7 days.

C. Formed Surfaces: Cure by moist curing with forms in place for full curing period.

D. Surfaces Not in Contact with Forms:

1. Start initial curing as soon as free water has disappeared and before surface is dry. Keep continuously moist for not less than three days by water ponding, water-fog spray, or saturated burlap, as acceptable to the Engineer.

2. Begin final curing after initial curing but before surface is dry.
   a. Moisture-retaining cover: Seal in place with waterproof tape or adhesive.
   b. Curing compound: Apply in two coats at right angles, using application rate recommended by manufacturer.

IELD UALITY CONTROL

A. An independent testing agency will perform field quality control tests, as specified in Section 01400.

B. Provide free access to concrete operations at project site and cooperate with appointed firm.

C. Submit proposed mix design to engineer and testing firm for review prior to commencement of concrete operations.

D. Tests of concrete and concrete materials may be performed at any time to ensure conformance with specified requirements.

E. Compressive Strength Tests: ASTM C 39. For each test, mold and cure three concrete test cylinders.

Obtain test samples for every 50 cu yd or less of concrete placed.

F. Take two additional test cylinders during cold weather concreting, cured on job site under same conditions as concrete it represents.

G. Perform one slump test for each load at point of discharge; and perform slump test with each set of test cylinders taken.

1. If maximum slump for the application is exceeded, it will be assumed that the water content is excessive and the load shall be rejected.

2. If slump is less that the minimum for the application, a measured quantity of water may be added to the mix; quantity shall not exceed 1/6 gallon of water per bag of cement.

3. Water shall be added only in the presence of the Engineer and after a slump test has been made.

4. If concrete has been mixed for more than one hour, the loss of slump shall be considered as being caused by setting of concrete; water shall not be added, and the load shall be rejected.

H. Perform test to determine air content in accordance with ASTM C 231; a minimum of one test shall be done each time a slump test is made. Air content shall be within specified limits.

DE□ECTI□E CONCRETE

A. Test Results: The testing agency shall report test results in writing to City Engineer and Contractor within 24 hours of test.

B. Defective Concrete: Concrete not conforming to required lines, details, dimensions, tolerances or specified requirements.

C. Repair or replacement of defective concrete will be determined by the City Engineer or Inspector. The cost of additional testing shall be borne by Contractor when defective concrete is identified.

D. Do not patch, fill, touch-up, repair, or replace exposed concrete except upon express direction of City Engineer or Inspector for each individual area.

SCHEDULE □CONCRETE TYPES AND □INISHES

A. Structure Not Exposed to View: 4,000 psi 28 day concrete; form finish surface, with honeycomb and holes filled and repaired.

B. Exposed Structures: 4,000 psi 28 day concrete; air entrained, smooth rubbed finish.

END O□ SECTION

DIVISION 04

FINISHES

SECTION □□□□□

PAINTS AND COATINGS

PART □ GENERAL

□□□□ SECTION INCLUDES

A. Surface preparation.

B. Field application of paints, stains, varnishes, and other coatings.

C. Painting materials and methods for conduit identification specified in Section 16075.

D. See Schedule - Surfaces to be finished, at end of Section.

□□□□ RE□ERENCES

A. ASTM D 16 - Standard Terminology Relating to Paint, Varnish, Lacquer, and Related Products.

B. ASTM D 4442 - Standard Test Methods for Direct Moisture Content Measurement of Wood and Wood-Base Materials.

C. NPCA (US) - Guide to U.S. Government Paint Specifications; National Paint & Coatings Association.

D. SSPC (PM1) - Steel Structures Painting Manual, Vol. 1, Good Painting Practice; Society for Protective Coatings.

E. SSPC (PM2) - Steel Structures Painting Manual, Vol. 2, Systems and Specifications; Society for Protective Coatings.

F. Use the latest issue of the above reference standards as of the date of the Project.

□□□□ DE□INITIONS

A. Conform to ASTM D 16 for interpretation of terms used in this section.

□□□□ SUBMITTALS

A. See Section 01300 - Administrative Requirements, for submittal procedures.

B. Product Data: Provide data on all finishing products.

C. Samples: Submit one paper chip samples, 2 x 2 inch in size illustrating range of colors and textures available for each surface finishing product scheduled.

D. Manufacturer's Instructions: Indicate special surface preparation procedures.

E. Maintenance Data: Submit data on cleaning, touch-up, and repair of painted and coated surfaces.

□□□□ □UALITY ASSURANCE

A. Manufacturer Qualifications: Company specializing in manufacturing the Products specified in this section with minimum three years documented experience.

B. Applicator Qualifications: Company specializing in performing the work of this section with minimum three years experience.

REGULATORY REQUIREMENTS

A. Conform to applicable code for flame and smoke rating requirements for products and finishes.

DELIVERY STORAGE AND PROTECTION

A. Deliver products to site in sealed and labeled containers; inspect to verify acceptability.

B. Container Label: Include manufacturer's name, type of paint, brand name, lot number, brand code, coverage, surface preparation, drying time, cleanup requirements, color designation, and instructions for mixing and reducing.

C. Paint Materials: Store at minimum ambient temperature of 45 degrees F and a maximum of 90 degrees F, in ventilated area, and as required by manufacturer's instructions.

ENVIRONMENTAL REQUIREMENTS

A. Do not apply materials when surface and ambient temperatures are outside the temperature ranges required by the paint product manufacturer.

B. Do not apply exterior coatings during rain or snow, or when relative humidity is outside the humidity ranges required by the paint product manufacturer.

C. Minimum Application Temperatures for Latex Paints: 45 degrees F for interiors; 50 degrees F for exterior; unless required otherwise by manufacturer's instructions.

D. Provide lighting level of 80 ft candles measured mid-height at substrate surface.

PART 2 PRODUCTS

MANUFACTURERS

A. Paints:

1. Benjamin Moore & Co.

2. Sherwin-Williams Co.

B. Substitutions: See Section 01600 - Product Requirements.

PAINTS AND COATINGS GENERAL

A. Paints and Coatings: Ready mixed, except field-catalyzed coatings. Prepare pigments:

1. To a soft paste consistency, capable of being readily and uniformly dispersed to a homogeneous coating.

2. For good flow and brushing properties.

3. Capable of drying or curing free of streaks or sags.

B. Colors to be selected by the Owner from the manufacturer’s standard colors and shall be approved by the City Planner.

PAINT SYSTEMS EXTERIOR

A. Paint WE-OP-3A - Wood, Opaque, Alkyd, 3 Coat:

1. One coat of alkyd primer sealer.

2. Semi-gloss: Two coats of alkyd enamel.

B. Paint ME-OP-3A - Ferrous Metals, Unprimed, Alkyd, 3 Coat:

1. One coat of alkyd primer.

2. Semi-gloss: Two coats of alkyd enamel.

C. Paint ME-OP-3L - Ferrous Metals, Unprimed, Latex, 3 Coat:

1. One coat of latex primer.

2. Semi-gloss: Two coats of latex enamel.

D. Paint ME-OP-2A - Ferrous Metals, Primed, Alkyd, 2 Coat:

1. Touch-up with zinc chromate primer.

2. Semi-gloss: Two coats of alkyd enamel.

E. Paint ME-OP-2L - Ferrous Metals, Primed, Latex, 2 Coat:

1. Touch-up with zinc chromate primer.

2. Semi-gloss: Two coats of latex enamel.

F. Paint MgE-OP-3A - Galvanized Metals, Alkyd, 3 Coat:

1. One coat galvanize primer.

2. Semi-gloss: Two coats of alkyd enamel.

G. Paint MgE-OP-3L - Galvanized Metals, Latex, 3 Coat:

1. One coat galvanize primer.

2. Semi-gloss: Two coats of latex enamel.

□□□□ PAINT SYSTEMS □INTERIOR

A. Paint WI-OP-3A - Wood, Opaque, Alkyd, 3 Coat:

1. One coat alkyd primer sealer.

2. Semi-gloss: Two coats of alkyd enamel.

B. Paint WI-OP-3L - Wood, Opaque, Latex, 3 Coat:

1. One coat of latex primer sealer.

2. Semi-gloss: Two coats of latex enamel.

C. Paint CI-OP-3A - Concrete/Masonry, Opaque, Alkyd, 3 Coat:

1. One coat of block filler.

2. Semi-gloss: Two coats of alkyd enamel.

D. Paint CI-OP-3L - Concrete/Masonry, Opaque, Latex, 3 Coat:

1. One coat of block filler.

2. Semi-gloss: Two coats of latex enamel.

E. Paint MI-OP-3A - Ferrous Metals, Unprimed, Alkyd, 3 Coat:

1. One coat of alkyd primer.

2. Semi-gloss: Two coats of alkyd enamel.

F. Paint MI-OP-3L - Ferrous Metals, Unprimed, Latex, 3 Coat:

1. One coat of latex primer.

2. Semi-gloss: Two coats of latex enamel.

G. Paint MgI-OP-3A - Galvanized Metals, Alkyd, 3 Coat:

1. One coat galvanize primer.

2. Semi-gloss: Two coats of alkyd enamel.

H. Paint MgI-OP-3L - Galvanized Metals, Latex, 3 Coat:

1. One coat galvanize primer.

2. Semi-gloss: Two coats of latex enamel.

I. Paint CI-OP-3Af - Concrete/Masonry, Alkyd Floor Enamel, 3 Coat:

1. One coat of alkali resistant primer.

2. Gloss: Two coats of alkyd floor enamel.

J. Paint CI-OP-3E - Concrete/Masonry, Epoxy Enamel, 3 Coat:

1. One coat of catalyzed epoxy primer.

2. Gloss: Two coats of catalyzed epoxy enamel.

K. Paint GI-OP-3A - Gypsum Board/Plaster, Alkyd, 3 Coat:

1. One coat of alkyd primer sealer.

2. Semi-gloss: Two coats of alkyd enamel.

L. Paint GI-OP-3L - Gypsum Board/Plaster, Latex, 3 Coat:

1. One coat of alkyd primer sealer.

2. Semi-gloss: Two coats of latex enamel.

M. Paint GI-OP-3LA - Gypsum Board/Plaster, Latex-Acrylic, 3 Coat:

1. One coat of alkyd primer sealer.

2. Semi-gloss: Two coats of latex-acrylic enamel.

ACCESSORY MATERIALS

A. Accessory Materials: Linseed oil, shellac, turpentine, paint thinners and other materials not specifically indicated but required to achieve the finishes specified; commercial quality.

B. Patching Material: Latex filler.

C. Fastener Head Cover Material: Latex filler.

PART EXECUTION

EXAMINATION

A. Verify that surfaces are ready to receive Work as instructed by the product manufacturer.

B. Examine surfaces scheduled to be finished prior to commencement of work. Report any condition that may potentially affect proper application.

C. Test shop-applied primer for compatibility with subsequent cover materials.

D. Measure moisture content of surfaces using an electronic moisture meter. Do not apply finishes unless moisture content of surfaces are below the following maximums:

1. Plaster and Gypsum Wallboard: 12 percent.

2. Masonry, Concrete, and Concrete Unit Masonry: 12 percent.

3. Interior Wood: 15 percent, measured in accordance with ASTM D 4442.

4. Exterior Wood: 15 percent, measured in accordance with ASTM D 4442.

5. Concrete Floors: 8 percent.

PREPARATION

A. Surface Appurtenances: Remove or mask electrical plates, hardware, light fixture trim, escutcheons, and fittings prior to preparing surfaces or finishing.

B. Surfaces: Correct defects and clean surfaces which affect work of this section. Remove or repair existing coatings that exhibit surface defects.

C. Marks: Seal with shellac those which may bleed through surface finishes.

D. Impervious Surfaces: Remove mildew by scrubbing with solution of tetra-sodium phosphate and bleach. Rinse with clean water and allow surface to dry.

E. Concrete and Unit Masonry Surfaces to be Painted: Remove dirt, loose mortar, scale, salt or alkali powder, and other foreign matter. Remove oil and grease with a solution of tri-sodium phosphate; rinse well and allow to dry. Remove stains caused by weathering of corroding metals with a solution of sodium metasilicate after thoroughly wetting with water. Allow to dry.

F. Gypsum Board Surfaces to be Painted: Fill minor defects with filler compound. Spot prime defects after repair.

G. Concrete Floors to be Painted: Remove contamination, acid etch, and rinse floors with clear water. Verify required acid-alkali balance is achieved. Allow to dry.

H. Galvanized Surfaces to be Painted: Remove surface contamination and oils and wash with solvent. Apply coat of etching primer.

I. Uncoated Steel and Iron Surfaces to be Painted: Remove grease, mill scale, weld splatter, dirt, and rust. Where heavy coatings of scale are evident, remove by hand wire brushing or sandblasting; clean by washing with solvent. Apply a treatment of phosphoric acid solution, ensuring weld joints, bolts, and nuts are similarly cleaned. Prime paint entire surface; spot prime after repairs.

J. Shop-Primed Steel Surfaces to be Finish Painted: Sand and scrape to remove loose primer and rust. Feather edges to make touch-up patches inconspicuous. Clean surfaces with solvent. Prime bare steel surfaces. Re-prime entire shop-primed item.

K. Interior Wood Items to Receive Opaque Finish: Wipe off dust and grit prior to priming. Seal knots, pitch streaks, and sappy sections with sealer. Fill nail holes and cracks after primer has dried; sand between coats. Back prime concealed surfaces before installation.

L. Exterior Wood to Receive Opaque Finish: Remove dust, grit, and foreign matter. Seal knots, pitch streaks, and sappy sections. Fill nail holes with tinted exterior caulking compound after prime coat has been applied. Back prime concealed surfaces before installation.

APPLICATION

A. Apply products in accordance with manufacturer's instructions.

B. Where adjacent sealant is to be painted, do not apply finish coats until sealant is applied.

C. Do not apply finishes to surfaces that are not dry. Allow applied coats to dry before next coat is applied.

D. Apply each coat to uniform appearance. Apply each coat of paint slightly darker than preceding coat unless otherwise approved.

E. Sand wood surfaces lightly between coats to achieve required finish.

F. Vacuum clean surfaces of loose particles. Use tack cloth to remove dust and particles just prior to applying next coat.

FINISHING MECHANICAL AND ELECTRICAL EQUIPMENT

A. Refer to Section 15075 and Section 16075 for schedule of color coding of equipment, duct work, piping, and conduit.

B. Paint shop-primed equipment, where indicated.

C. Remove unfinished louvers, grilles, covers, and access panels on mechanical and electrical components and paint separately.

D. Finish equipment, piping, conduit, and exposed duct work in utility areas in colors according to the color coding scheme indicated.

E. Reinstall electrical cover plates, hardware, light fixture trim, escutcheons, and fittings removed prior to finishing.

FIELD QUALITY CONTROL

A. See Section 01400 - Quality Requirements, for general requirements for field inspection.

B. Owner will provide field inspection.

CLEANING

A. Collect waste material which may constitute a fire hazard, place in closed metal containers, and remove daily from site.

□□□□ SCHEDULE □SUR□ACES TO BE □INISHED

A. Do Not Paint or Finish the Following Items:

1. Items fully factory-finished unless specifically noted.

2. Fire rating labels, equipment serial number and capacity labels.

3. Stainless steel items.

B. Paint the surfaces described below under Schedule - Paint Systems.

C. Mechanical and Electrical: Use paint systems defined for the substrates to be finished.

1. Paint all insulated and exposed pipes, conduit, boxes, mechanical equipment, and electrical equipment occurring in finished areas, unless otherwise indicated.

2. Paint shop-primed items occurring in finished areas.

D. Paint both sides and edges of plywood backboards for electrical and telephone equipment before installing equipment.

□□□□ SCHEDULE □PAINT SYSTEMS

A. Concrete, Concrete Block, Brick Masonry: Finish all surfaces exposed to view, as indicated.

1. Interior: CI-OP-3L, semi-gloss.

B. Gypsum Board: Finish all surfaces exposed to view.

1. Interior Ceilings and Bulkheads: GI-OP-3L, flat.

2. Interior Walls: GI-OP-3A, semi-gloss.

C. Wood: Finish all surfaces exposed to view.

1. Exterior trim and frames: WE-OP-3A.

2. Interior trim and frames: WI-OP-3A, semi-gloss.

D. Steel Fabrications: Finish all surfaces exposed to view.

1. Exterior: ME-OP-3A, gloss; finish all surfaces, including concealed surfaces, before installation.

2. Interior: MI-OP-3L, gloss.

E. Galvanized Steel: Finish all surfaces exposed to view, as indicated.

F. Shop-Primed Metal Items: Finish all surfaces exposed to view, as indicated.

1. Finish the following items:
   a. Mechanical equipment.
   b. Electrical equipment.

END O□ SECTION

DIVISION 05

ELECTRICAL

SECTION □□□□□

GROUNDING AND BONDING

PART □ GENERAL

□□□□ SECTION INCLUDES

A. Grounding electrodes and conductors, equipment grounding conductors, and bonding to complete grounding system consisting of:

1. Existing metal underground water pipe.
2. Metal frame of the building.
3. Concrete-encased electrode.
4. Rod electrodes.
5. Plate electrodes.
6. Active electrodes.

□□□□ RE□ERENCES

A. NETA STD ATS - Acceptance Testing Specifications for Electrical Power Distribution Equipment and Systems; International Electrical Testing Association; latest edition.

B. NFPA 70 - National Electrical Code; National Fire Protection Association.

□□□□ PER□ORMANCE RE□UIREMENTS

A. Grounding System Resistance: 5 ohms or less.

□□□□ SUBMITTALS

A. See Section 01300 - Administrative Requirements for submittals procedures.

B. Product Data: Provide for grounding electrodes and connections.

C. Test Reports: Indicate overall resistance to ground and resistance of each electrode.

D. Manufacturer's Instructions: Indicate application conditions and limitations of use stipulated by product testing agency specified under Quality Assurance. Include instructions for storage, handling, protection, examination, preparation, and installation of product.

E. Project Record Documents: Record actual locations of components and grounding electrodes.

F. Certificate of Compliance: Indicate approval of installation by authority having jurisdiction.

□□□□ □UALITY ASSURANCE

A. Conform to requirements of NFPA 70, Article 250.

B. Manufacturer Qualifications: Company specializing in manufacturing the products specified in this section with minimum three years documented experience.

C. Products: Listed and classified by Underwriters Laboratories, Inc. as suitable for the purpose specified and indicated.

PART □ PRODUCTS

□□□□ ELECTRODES

A. Grounding electrode system and grounding electrode conductor. NFPA 70, Article 250, Part III.

□□□□ CONNECTORS AND ACCESSORIES

A. Grounding electrode system and grounding electrode conductor. NFPA 70, Article 250, Part VII.

PART □ E□ECUTION

□□□□ E□AMINATION

A. Verify existing conditions prior to beginning work.

B. Verify that final backfill and compaction has been completed before driving rod electrodes.

□□□□ INSTALLATION

A. Install ground electrodes at locations indicated. Install additional rod electrodes as required to achieve specified resistance to ground.

B. Foundation Electrodes: No. 4.

C. Provide grounding electrode conductor and connect to reinforcing steel in foundation footing where indicated. Bond steel together.

D. Provide bonding to meet requirements described in Quality Assurance.

E. Bond together reinforcing steel and metal accessories in pool and fountain structures; in accordance with NFPA 70, Article 250, Part IV and Article 680.

F. Install transient suppression plate where indicated.

G. Equipment Grounding Conductor: Provide separate, insulated conductor within each feeder and branch circuit raceway. Terminate each end on suitable lug, bus, or bushing. NFPA 70, Part VII.

H. Interface with lightning protection system. NFPA 70, Article 250.106.

□□□□ □IELD □UALITY CONTROL

A. Owner will provide field inspection in accordance with Section 01400.

B. Inspect and test in accordance with NETA STD ATS except Section 4.

C. Perform inspections and tests listed in NETA STD ATS, Section 7.13.

END O□ SECTION

SECTION □□□□□

HANGERS AND SUPPORTS

PART □ GENERAL

□□□□ SECTION INCLUDES

A. Conduit and equipment supports.

B. Anchors and fasteners.

□□□□ RE□ERENCES

A. NECA (INST) - NECA Standard of Installation; National Electrical Contractors Association; latest edition.

B. NFPA 70 - National Electrical Code; National Fire Protection Association.

□□□□ SUBMITTALS

A. See Section 01300 - Administrative Requirements, for submittal procedures.

B. Product Data: Provide manufacturer's catalog data for fastening systems.

C. Manufacturer's Instructions: Indicate application conditions and limitations of use stipulated by product testing agency. Include instructions for storage, handling, protection, examination, preparation, and installation of product.

□□□□ □UALITY ASSURANCE

A. Conform to requirements of NFPA 70.

B. Products: Listed and classified by Underwriters Laboratories, Inc. as suitable for the purpose specified and indicated.

PART □ PRODUCTS

□□□□ MATERIALS

A. Hangers, Supports, Anchors, and Fasteners - General: Corrosion-resistant materials of size and type adequate to carry the loads of equipment and conduit, including weight of wire in conduit.

B. Supports: Fabricated of structural steel or formed steel members; galvanized.

C. Anchors and Fasteners:

1. Concrete Structural Elements: Use precast inserts, expansion anchors, or preset inserts.

2. Steel Structural Elements: Use beam clamps, or welded fasteners.

3. Concrete Surfaces: Expansion anchors.

4. Hollow Masonry, Plaster, and Gypsum Board Partitions: Use toggle bolts or hollow wall fasteners.

5. Sheet Metal: Use sheet metal screws.

6. Wood Elements: Use wood screws.

PART □ E□ECUTION

□□□□ INSTALLATION

A. Locate and install anchors, fasteners, and supports in accordance with NECA "Standard of Installation".

   1. Do not fasten supports to pipes, ducts, mechanical equipment, or conduit.

   2. Obtain permission from City Engineer before drilling or cutting structural members.

B. Rigidly weld support members or use hexagon-head bolts to present neat appearance with adequate strength and rigidity. Use spring lock washers under all nuts.

C. Install surface-mounted cabinets and panel boards with minimum of four anchors.

D. In wet and damp locations use steel channel supports to stand cabinets and panel boards 1 inch off wall.

E. Use sheet metal channel to bridge studs above and below cabinets and panel boards recessed in hollow partitions.

END O□ SECTION

SECTION □□□□□

ELECTRICAL IDENTI□ICATION

PART □ GENERAL

□□□□ SECTION INCLUDES

A. Nameplates and labels.

B. Wire and cable markers.

C. Conduit markers.

D. Field-painted identification of conduit.

□□□□ RELATED SECTIONS

A. Section 04900 - Paints and Coatings.

□□□□ RE□ERENCES

A. NFPA 70 - National Electrical Code; National Fire Protection Association.

□□□□ SUBMITTALS

A. See Section 01300 - Administrative Requirements for submittals procedures.

B. Product Data: Provide catalog data for nameplates, labels, and markers.

C. Manufacturer's Instructions: Indicate application conditions and limitations of use stipulated by product testing agency specified under Quality Assurance. Include instructions for storage, handling, protection, examination, preparation and installation of product.

□□□□ □UALITY ASSURANCE

A. Conform to requirements of NFPA 70.

B. Products: Listed and classified by Underwriters Laboratories, Inc. as suitable for purpose specified and shown.

PART □ PRODUCTS

□□□□ NAMEPLATES AND LABELS

A. Nameplates: Engraved three-layer laminated plastic, white letters on black background.

B. Locations:
   1. Each electrical distribution and control equipment enclosure.

C. Letter Size:

   1. Use 1/8 inch letters for identifying individual equipment and loads.

D. Labels: Embossed adhesive tape, with 3/16 inch white letters on black background. Use only for identification of individual wall switches and receptacles, control device stations, and appurtenant items.

□□□□ □ IRE MARKERS

A. Description: tape type wire markers or heat shrink.

B. Locations: Each conductor at panel board gutters, pull boxes, outlet boxes, and junction boxes and each load connection.

C. Legend:

1. Power and Lighting Circuits: Branch circuit or feeder number indicated on drawings.

2. Control Circuits: Control wire number indicated on schematic and interconnection diagrams on drawings. 120/208-240 vault.

D. Phase ID: Black, red, blue, white, green, 120/208 - 240 volt and brown, orange, yellow, grey, green 277/480 volt.

□□□□ CONDUIT MARKERS

A. Location: Furnish markers for each conduit longer than 6 feet.

B. Spacing: 20 feet on center.

□□□□ UNDERGROUND □ ARNING TAPE

A. Description: 4 inch wide plastic tape, detectable type colored red with suitable warning legend describing buried electrical lines.

PART □ E□ECUTION

□□□□ PREPARATION

A. Degrease and clean surfaces to receive nameplates and labels.

□□□□ INSTALLATION

A. Install nameplates and labels parallel to equipment lines.

B. Secure nameplates to equipment front using screws.

C. Identify underground conduits using underground warning tape. Install one tape per trench at 12 inches below finished grade.

END O□ SECTION

SECTION □□□□□

BUILDING □ IRE AND CABLE

PART □ GENERAL

□□□□ SECTION INCLUDES

A. Wire and cable for 600 volts and less.

B. Wiring connectors and connections.

□□□□ RELATED SECTIONS

A. Section 02112 - Trench Excavation.

B. Section 02115 - Excavation.

C. Section 02116 - Fill and Backfill: Bedding and backfilling.

D. Section 05075 - Electrical Identification.

□□□□ RE□ERENCES

A. NECA (INST) - NECA Standard of Installation; National Electrical Contractors Association; latest edition.

B. NETA STD ATS - Acceptance Testing Specifications for Electrical Power Distribution Equipment and Systems; International Electrical Testing Association; latest edition.

C. NFPA 70 - National Electrical Code; National Fire Protection Association.

□□□□ SUBMITTALS

A. See Section 01300 - Administrative Requirements, for submittal procedures.

B. Product Data: Provide for each wire and cable type.

C. Test Reports: Indicate procedures and values obtained.

D. Manufacturer's Installation Instructions: Indicate application conditions and limitations of use stipulated by product testing agency.

E. Project Record Documents: Record actual locations of components and circuits.

□□□□ □UALITY ASSURANCE

A. Conform to requirements of NFPA 70.

B. Products: Furnish products listed and classified by Underwriters Laboratories Inc. as suitable for the purpose specified and indicated.

PART □ PRODUCTS

□□□□ □ IRING RE□UIREMENTS

A. Concealed Dry Interior Locations: Use only building wire with Type THHN insulation in raceway.

B. Exposed Dry Interior Locations: Use only building wire with Type THHN insulation in raceway.

C. Wet or Damp Interior Locations: Use only building wire with Type XHHW.

D. Exterior Locations: Use only building wire with Type THWN insulation in raceway.

E. Underground Installations: Use only building wire with Type XHHW-2 insulation in raceway.

F. Use stranded copper conductor for feeders and branch circuits.

G. Use stranded copper conductors for control circuits.

H. Use copper conductor not smaller than 12 AWG for power and lighting circuits.

I. Use copper conductor not smaller than 16 AWG for control circuits.

J. Use 10 AWG conductors for 20 ampere, 120 volt branch circuits longer than 75 feet.

K. Use 10 AWG conductors for 20 ampere, 277 volt branch circuits longer than 200 feet.

L. Conductor sizes are based on copper.

□□□□ BUILDING □ IRE

A. Description: Single conductor insulated wire.

B. Conductor: Copper.

C. Insulation Voltage Rating: 600 volts.

D. Insulation: NFPA 70, Type THHN.

□□□□ □ IRING CONNECTORS

A. Solderless Pressure Connectors:

B. Spring Wire Connectors:

C. Compression Connectors:

PART □ E□ECUTION

□□□□ E□AMINATION

A. Verify that interior of building has been protected from weather.

B. Verify that mechanical work likely to damage wire and cable has been completed.

C. Verify that raceway installation is complete and supported.

D. Verify that field measurements are as indicated.

PREPARATION

A. Completely and thoroughly swab raceway before installing wire.

INSTALLATION

A. Route wire and cable as required to meet project conditions.

1. Wire and cable routing indicated is approximate unless dimensioned.

2. Where wire and cable destination is indicated and routing is not shown, determine exact routing and lengths required.

3. Include wire and cable of lengths required to install connected devices within 10 ft of location shown.

B. Install wire and cable in accordance with the NECA "Standard of Installation."

C. Use wiring methods indicated.

D. Pull all conductors into raceway at same time.

E. Use suitable wire pulling lubricant.

F. Protect exposed cable from damage.

G. Use suitable cable fittings and connectors.

H. Neatly train and lace wiring inside boxes, equipment, and panel boards.

I. Clean conductor surfaces before installing lugs and connectors.

J. Make splices, taps, and terminations to carry full ampacity of conductors with no perceptible temperature rise.

K. Use insulated spring wire connectors with plastic caps for copper conductor splices and taps, 10 AWG and smaller.

L. Identify and color code wire and cable under provisions of Section 16075. Identify each conductor with its circuit number or other designation indicated.

IELD UALITY CONTROL

A. Perform field inspection and testing in accordance with Section 01400.

B. Inspect and test in accordance with NETA STD ATS, except Section 4.

C. Perform inspections and tests listed in NETA STD ATS, Section 7.3.1.

END O SECTION

SECTION □□□□□

CONDUIT

PART □ GENERAL

□□□□ SECTION INCLUDES

A. Conduit, fittings and conduit bodies.

□□□□ RELATED SECTIONS

A. Section 05060 - Grounding and Bonding.

B. Section 05070 - Hangers and Supports.

C. Section 05075 - Electrical Identification.

D. Section 05138 - Boxes.

□□□□ RE□ERENCES

A. ANSI C80.1 - American National Standard Specification for Rigid Steel Conduit -- Zinc Coated; latest edition.

B. ANSI C80.3 - American National Standard Specification for Electrical Metallic Tubing -- Zinc Coated; latest edition.

C. NECA (INST) - NECA Standard of Installation; National Electrical Contractors Association; latest edition.

D. NEMA FB 1 - Fittings, Cast Metal Boxes, and Conduit Bodies for Conduit and Cable Assemblies; National Electrical Manufacturers Association; latest edition.

E. NEMA RN 1 - Polyvinyl Chloride (PVC) Externally Coated Galvanized Rigid Steel Conduit and Intermediate Metal Conduit; National Electrical Manufacturers Association; latest edition.

F. NEMA TC 2 - Electrical Plastic Tubing (EPT) and Conduit (EPC-40 and EPC-80); National Electrical Manufacturers Association; latest edition.

G. NEMA TC 3 - PVC Fittings for Use with Rigid PVC Conduit and Tubing; National Electrical Manufacturers Association; latest edition.

H. NFPA 70 - National Electrical Code; National Fire Protection Association.

□□□□ SUBMITTALS

A. See Section 01300 - Administrative Requirements for submittals procedures.

B. Product Data: Provide for metallic conduit, flexible metal conduit, liquid tight flexible metal conduit, metallic tubing, nonmetallic conduit, flexible nonmetallic conduit, nonmetallic tubing, fittings, and conduit bodies.

C. Project Record Documents: Accurately record actual routing of conduits larger than 2 inches.

□□□□ □UALITY ASSURANCE

A. Conform to requirements of NFPA 70.

B. Products: Listed and classified by Underwriters Laboratories, Inc. as suitable for purpose specified and shown.

DELIVERY STORAGE AND HANDLING

A. Accept conduit on site. Inspect for damage.

B. Protect conduit from corrosion and entrance of debris by storing above grade. Provide appropriate covering.

C. Protect PVC conduit from sunlight.

PART PRODUCTS

CONDUIT REQUIREMENTS

A. Conduit Size: Comply with NFPA 70.

1. Minimum Size: 3/4 inch unless otherwise specified.

B. Underground Installations:

1. More than Five Feet from Foundation Wall: Use schedule 40 non-metallic conduit or schedule 80 thickwall non-metallic conduit.

2. Within Five Feet from Foundation Wall: Use plastic coated GRC conduit or thickwall GRC rigid conduit with corrosion tape.

3. In or Under Slab on Grade: Use schedule 40 conduit or schedule 80 thickwall non-metallic conduit.

4. Minimum Size: 1 inch.

C. Outdoor Locations Above Grade: Use rigid steel conduit or electrical metallic tubing.

D. In Slab Above Grade:

1. Use rigid steel conduit.

2. Maximum Size Conduit in Slab: one inch; 3/4 inch for conduits crossing each other.

E. Wet and Damp Locations: GRC, RSC.

F. Dry Locations:

1. Concealed: Use rigid steel conduit or electrical metallic tubing.

2. Exposed: GRC or RSC.

METAL CONDUIT

A. Rigid Steel Conduit: ANSI C80.1.

B. Fittings and Conduit Bodies: NEMA FB 1; material to match conduit.

1. No Aluminum

C. Conduit must be threaded, no thread/OSS fittings.

PVC COATED METAL CONDUIT

A. Description: NEMA RN 1; rigid steel conduit with external PVC coating, 20 mil thick.

B. Fittings and Conduit Bodies: NEMA FB 1; steel fittings with external PVC coating to match conduit.

□□□□ □LE□IBLE METAL CONDUIT

A. Description: Interlocked steel construction.

B. Fittings: NEMA FB 1.

□□□□ LI□UIDTIGHT □LE□IBLE METAL CONDUIT

A. Description: Interlocked steel construction with PVC jacket.

B. Fittings: NEMA FB 1.

□□□□ ELECTRICAL METALLIC TUBING □EMT□

A. Description: ANSI C80.3; galvanized tubing.

B. Fittings and Conduit Bodies: NEMA FB 1; steel or malleable iron compression type.

□□□□ NONMETALLIC CONDUIT

A. Description: NEMA TC 2; Schedule 40 PVC and Schedule 80 PVC.

B. Fittings and Conduit Bodies: NEMA TC 3.

PART □ E□ECUTION

□□□□ E□AMINATION

A. Verify that field measurements are as shown on drawings.

B. Verify routing and termination locations of conduit prior to rough-in.

C. Conduit routing is shown on drawings in approximate locations unless dimensioned. Route as required to complete wiring system.

□□□□ INSTALLATION

A. Install conduit in accordance with NECA Standard of Installation.

B. Install nonmetallic conduit in accordance with manufacturer's instructions.

C. Arrange supports to prevent misalignment during wiring installation.

D. Support conduit using coated steel or malleable iron straps, lay-in adjustable hangers, clevis hangers, and split hangers.

E. Group related conduits; support using conduit rack. Construct rack using steel channel; provide space on each for 25 percent additional conduits.

F. Fasten conduit supports to building structure and surfaces under provisions of Section 05070.

G. Do not support conduit with wire or perforated pipe straps. Remove wire used for temporary supports.

H. Do not attach conduit to ceiling support wires.

I. Arrange conduit to maintain headroom and present neat appearance.

J. Route exposed conduit parallel and perpendicular to walls.

K. Route conduit installed above accessible ceilings parallel and perpendicular to walls.

L. Route conduit in and under slab from point-to-point.

M. Maintain adequate clearance between conduit and piping.

N. Maintain 12 inch clearance between conduit and surfaces with temperatures exceeding 104 degrees F.

O. Cut conduit square using saw or pipe cutter; de-burr cut ends.

P. Bring conduit to shoulder of fittings; fasten securely.

Q. Join nonmetallic conduit using cement as recommended by manufacturer. Wipe nonmetallic conduit dry and clean before joining. Apply full even coat of cement to entire area inserted in fitting. Allow joint to cure for 20 minutes, minimum.

R. Use conduit hubs to fasten conduit to sheet metal boxes in damp and wet locations.

S. Install no more than equivalent of three 90 degree bends between boxes. Use conduit bodies to make sharp changes in direction, as around beams. Use hydraulic one shot bender to fabricate bends in metal conduit larger than 2 inch size.

T. Avoid moisture traps; provide junction box with drain fitting at low points in conduit system.

U. Provide suitable fittings to accommodate expansion and deflection where conduit crosses seismic.

V. Provide suitable pull string, rated for 200 pounds tensile strength, in each empty conduit except sleeves and nipples.

W. Use suitable caps to protect installed conduit against entrance of dirt and moisture.

X. Ground and bond conduit as required.

Y. Identify conduit under provisions of Section 05075.

END O□ SECTION

SECTION □□□□□

BO□ES

PART □ GENERAL

□□□□ SECTION INCLUDES

A. Wall, ceiling, and floor outlet boxes.

B. Pull and junction boxes.

□□□□ RELATED SECTIONS

A. Section 05139 - Cabinets and Enclosures.

B. Section 05140 - Wiring Devices: Wall plates in finished areas.

□□□□ RE□ERENCES

A. NECA (INST) - NECA Standard of Installation; National Electrical Contractors Association; latest edition.

B. NEMA FB 1 - Fittings, Cast Metal Boxes, and Conduit Bodies for Conduit and Cable Assemblies; National Electrical Manufacturers Association; latest edition.

C. NEMA OS 1 - Sheet-Steel Outlet Boxes, Device Boxes, Covers and Box Supports; National Electrical Manufacturers Association; latest edition.

D. NEMA 250 - Enclosures for Electrical Equipment (1000 Volts Maximum); National Electrical Manufacturers Association; latest edition.

E. NFPA 70 - National Electrical Code; National Fire Protection Association.

□□□□ SUBMITTALS

A. See Section 01300 - Administrative Requirements, for submittal procedures.

B. Project Record Documents: Record actual locations and mounting heights of outlet, pull, and junction boxes on project record documents.

□□□□ □UALITY ASSURANCE

A. Conform to requirements of NFPA 70.

B. Products: Provide products listed and classified by Underwriters Laboratories, Inc., as suitable for the purpose specified and indicated.

PART □ PRODUCTS

□□□□ OUTLET BO□ES

A. Sheet Metal Outlet Boxes: NEMA OS 1, galvanized steel.

1. Luminaire and Equipment Supporting Boxes: Rated for weight of equipment supported; include 1/2 inch male fixture studs where required.

B. Cast Boxes: NEMA FB 1, Type FD, Malleable Iron. Provide gasketed cover by box manufacturer. Provide threaded hubs.

C. Wall Plates for Finished Areas: As specified in Section 05140.

PULL AND JUNCTION BOXES

A. Sheet Metal Boxes: NEMA OS 1, galvanized steel.

B. Hinged Enclosures: As specified in Section 16139.

C. Surface Mounted Cast Metal Box: NEMA 250, Type 4; flat-flanged, surface mounted junction box:

1. Material: Galvanized cast iron.

2. Cover: Furnish with ground flange, neoprene gasket, and stainless steel cover and screws.

D. In-Ground Cast Metal Box: NEMA 250, Type 6, outside flanged, recessed cover box for flush mounting:

1. Material: Galvanized cast iron.

2. Cover: Smooth cover with neoprene gasket and stainless steel cover screws.

3. Cover Legend: "ELECTRIC".

PART EXECUTION

EXAMINATION

A. Verify locations of floor boxes and outlets in offices and work areas prior to rough-in.

INSTALLATION

A. Install boxes in accordance with NECA "Standard of Installation."

B. Install in locations as shown on Drawings, and as required for splices, taps, wire pulling, equipment connections, and as required by NFPA 70.

C. Coordinate installation of outlet boxes for equipment connected under Section 05155.

D. Set wall mounted boxes at elevations to accommodate mounting heights specified in section for outlet device.

E. Electrical boxes are shown on Drawings in approximate locations unless dimensioned.

1. Adjust box locations up to 10 feet if required to accommodate intended purpose.

F. Orient boxes to accommodate wiring devices oriented as specified in Section 05140.

G. Maintain headroom and present neat mechanical appearance.

H. Coordinate mounting heights and locations of outlets mounted above counters, benches, and backsplashes.

I. Locate outlet boxes to allow luminaries positioned as shown on reflected ceiling plan.

J. Align adjacent wall mounted outlet boxes for switches, thermostats, and similar devices.

K. Use flush mounting outlet box in finished areas.

L. Locate flush mounting box in masonry wall to require cutting of masonry unit corner only. Coordinate masonry cutting to achieve neat opening.

M. Do not install flush mounting box back-to-back in walls; provide minimum 6 inches separation. Provide minimum 24 inches separation in acoustic rated walls.

N. Secure flush mounting box to interior wall and partition studs. Accurately position to allow for surface finish thickness.

O. Use stamped steel bridges to fasten flush mounting outlet box between studs.

P. Use adjustable steel channel fasteners for hung ceiling outlet box.

Q. Do not fasten boxes to ceiling support wires.

R. Support boxes independently of conduit.

S. Use gang box where more than one device is mounted together. Do not use sectional box.

T. Use cast outlet box in exterior locations exposed to the weather and wet locations.

U. Large Pull Boxes: Use hinged enclosure in interior dry locations, Nema 12 cast metal box in other locations.

AD USTING

A. Adjust flush-mounting outlets to make front flush with finished wall material.

B. Install knockout closures in unused box openings.

CLEANING

A. Clean interior of boxes to remove dust, debris, and other material.

B. Clean exposed surfaces and restore finish.

END O SECTION

SECTION □□□□□

CABINETS AND ENCLOSURES

PART □ GENERAL

□□□□ SECTION INCLUDES

A. Hinged cover enclosures.

B. Cabinets.

C. Terminal blocks.

D. Accessories.

□□□□ RELATED SECTIONS

A. Section 05070 - Hangers and Supports.

□□□□ RE□ERENCES

A. NECA (INST) - NECA Standard of Installation; National Electrical Contractors Association; latest edition.

B. NEMA 250 - Enclosures for Electrical Equipment (1000 Volts Maximum); National Electrical Manufacturers Association; latest edition.

C. NEMA ICS 4 - Industrial Control and Systems: Terminal Blocks; National Electrical Manufacturers Association; latest edition.

D. NFPA 70 - National Electrical Code; National Fire Protection Association.

□□□□ SUBMITTALS

A. See Section 01300 - Administrative Requirements, for submittal procedures.

B. Product Data: Provide manufacturer's standard data for enclosures and cabinets.

C. Manufacturer's Instructions: Indicate application conditions and limitations of use stipulated by product testing agency specified under Quality Assurance. Include instructions for storage, handling, protection, examination, preparation, and installation of product.

□□□□ □UALITY ASSURANCE

A. Conform to requirements of NFPA 70.

B. Products: Listed and classified by Underwriters Laboratories, Inc. as suitable for the purpose specified and indicated.

□□□□ MAINTENANCE MATERIALS

A. Furnish two of each key.

PART □ PRODUCTS

□□□□ HINGED CO□ER ENCLOSURES

A. Construction: NEMA 250, Type 4 steel enclosure.
B. Covers: Continuous hinge, held closed by flush latch operable by screwdriver.

C. Provide interior metal back panel for mounting terminal blocks and electrical components; finish with white enamel.

D. Enclosure Finish: Manufacturer's standard enamel.

CABINETS

A. Boxes: Galvanized steel (NEMA 4).

B. Backpan: Provide metal back pan for mounting terminal blocks. Paint white enamel.

C. Fronts: Steel, flush type with concealed trim clamps, door with concealed hinge, and flush lock keyed to match branch circuit panelboard. Finish with gray baked enamel.

D. Provide metal barriers to form separate compartments wiring of different systems and voltages.

E. Provide accessory feet for free-standing equipment.

TERMINAL BLOCKS

A. Terminal Blocks: NEMA ICS 4.

B. Power Terminals: Unit construction type with closed back and tubular pressure screw connectors, rated 600 volts.

C. Signal and Control Terminals: Modular construction type, suitable for channel mounting, with tubular pressure screw connectors, rated 600 volts.

D. Provide ground bus terminal block, with each connector bonded to enclosure.

ACCESSORIES

A. Plastic Raceway: Plastic channel with hinged or snap-on cover.

PART E ECUTION

INSTALLATION

A. Install in accordance with NECA Standard of Installation.

B. Clearences in accordance to NFPA70E.

C. Install enclosures and boxes plumb. Anchor securely to wall and structural supports at each corner under the provisions of Section 05070.

D. Install cabinet fronts plumb.

CLEANING

A. Clean electrical parts to remove conductive and harmful materials.

B. Remove dirt and debris from enclosure.

C. Clean finishes and touch up damage.

END O SECTION

SECTION □□□□□

□ IRING DE□ICES

PART □ GENERAL

□□□□ SECTION INCLUDES

A. Wall switches.

B. Receptacles.

C. Device plates and decorative box covers.

□□□□ RELATED SECTIONS

A. Section 05138 - Boxes.

□□□□ RE□ERENCES

A. NECA (INST) - NECA Standard of Installation; National Electrical Contractors Association; latest edition.

B. NEMA WD 1 - General Requirements for Wiring Devices; National Electrical Manufacturers Association; latest edition.

C. NEMA WD 6 - Wiring Device -- Dimensional Requirements; National Electrical Manufacturers Association; latest edition.

D. NFPA 70 - National Electrical Code; National Fire Protection Association.

□□□□ SUBMITTALS

A. See Section 01300 - Administrative Requirements, for submittal procedures.

B. Product Data: Provide manufacturer's catalog information showing dimensions, colors, and configurations.

C. Manufacturer's Installation Instructions.

□□□□ □UALITY ASSURANCE

A. Conform to requirements of NFPA 70.

B. Manufacturer Qualifications: Company specializing in manufacturing the products specified in this section with minimum three years documented experience.

C. Products: Provide products listed and classified by Underwriters Laboratories, Inc. as suitable for the purpose specified and indicated.

PART □ PRODUCTS

□□□□ □ ALL S□ ITCHES

A. Wall Switches: NEMA WD 1, Heavy Duty, AC only general-use snap switch.

1. Body and Handle: Ivory plastic with toggle handle.

2. Ratings:
   a. Voltage: 120 volts, AC.
   b. Current: 20 amperes.

RECEPTACLES

A. Receptacles: NEMA WD 1, Heavy duty.

1. Device Body: Ivory plastic.

2. Ratings:
   a. Voltage: 120 volts, AC.
   b. Current: 20 amperes.

3. Configuration: NEMA WD 6, type as specified and indicated.

B. GFCI Receptacles: Convenience receptacle with integral ground fault circuit interrupter to meet regulatory Requirements (20 AMP).

ALL PLATES

A. Decorative Cover Plates: Stainless Steel.

B. Jumbo Cover Plates: Stainless Steel.

C. Weatherproof Cover Plates: Gasketed cast metal hinged.

PART EXECUTION

EXAMINATION

A. Verify that outlet boxes are installed at proper height.

B. Verify that wall openings are neatly cut and will be completely covered by wall plates.

C. Verify that branch circuit wiring installation is completed, tested, and ready for connection to wiring devices.

PREPARATION

A. Provide extension rings to bring outlet boxes flush with finished surface.

B. Clean debris from outlet boxes.

INSTALLATION

A. Install in accordance with NECA "Standard of Installation."

B. Install devices plumb and level.

C. Install switches with OFF position down.

D. Install receptacles with grounding pole on bottom.

E. Connect wiring device grounding terminal to outlet box with bonding jumper.

F. Install decorative plates on switch, receptacle, and blank outlets in finished areas.

G. Connect wiring devices by wrapping conductor around screw terminal.

H. Use jumbo size plates for outlets installed in masonry walls.

I. Install galvanized steel plates on outlet boxes and junction boxes in unfinished areas, above accessible ceilings, on surface mounted outlets and label.

□□□□ □IELD □UALITY CONTROL

A. Perform field inspection, testing, and adjusting in accordance with Section 01400.

B. Inspect each wiring device for defects.

C. Operate each wall switch with circuit energized and verify proper operation.

D. Verify that each receptacle device is energized.

E. Test each receptacle device for proper polarity.

F. Test each GFCI receptacle device for proper operation.

□□□□ AD□USTING

A. Adjust devices and wall plates to be flush and level.

□□□□ CLEANING

A. Clean exposed surfaces to remove splatters and restore finish.

END O□ SECTION

SECTION □□□□□

E□UIPMENT □ IRING

PART □ GENERAL

□□□□ SECTION INCLUDES

A. Electrical connections to equipment.

□□□□ RELATED SECTIONS

A. Section 05131 - Conduit.

B. Section 05123 - Building Wire and Cable.

C. Section 05138 - Boxes.

D. Section 05140 - Wiring Devices.

□□□□ RE□ERENCES

A. NEMA WD 1 - General Requirements for Wiring Devices; National Electrical Manufacturers Association; latest edition.

B. NEMA WD 6 - Wiring Devices - Dimensional Requirements; National Electrical Manufacturers Association; latest edition.

C. NFPA 70 - National Electrical Code; National Fire Protection Association.

□□□□ SUBMITTALS

A. See Section 01300 - Administrative Requirements, for submittal procedures.

B. Product Data: Provide wiring device manufacturer’s catalog information showing dimensions, configurations, and construction.

C. Manufacturer's Instructions: Indicate application conditions and limitations of use stipulated by product testing agency. Include instructions for storage, handling, protection, examination, preparation, and installation of product.

□□□□ □UALITY ASSURANCE

A. Conform to requirements of NFPA 70.

B. Products: Listed and classified by Underwriters Laboratories, Inc. as suitable for the purpose specified and indicated.

□□□□ COORDINATION

A. Obtain and review shop drawings, product data, manufacturer's wiring diagrams, and manufacturer's instructions for equipment furnished under other sections.

B. Determine connection locations and requirements.

C. Sequence rough-in of electrical connections to coordinate with installation of equipment.

D. Sequence electrical connections to coordinate with start-up of equipment.

PART □ PRODUCTS

□□□□ MATERIALS

A. Cords and Caps: NEMA WD 6; match receptacle configuration at outlet provided for equipment.

1. Attachment Plug Construction: Conform to NEMA WD 1.

2. Cord Construction: NFPA 70, Type SO multiconductor flexible cord with identified equipment grounding conductor, suitable for use in damp locations.

3. Size: Suitable for connected load of equipment, length of cord, and rating of branch circuit overcurrent protection.

B. Disconnect Switches: As specified in applicable Sections and in individual equipment sections.

C. Wiring Devices: As specified in Section 05140.

D. Flexible Conduit: As specified in Section 05131.

E. Wire and Cable: As specified in Section 05123.

F. Boxes: As specified in Section 05138.

□□□□ E□UIPMENT CONNECTIONS

A. Electrical equipment shall be connected as indicated, as required and as directed:

1. Electrical Connection: Flexible conduit where required.

2. Electrical Connection: Cord and plug (NEMA 6-20R).

3. Provide field-installed disconnect switch.

PART □ E□ECUTION

□□□□ E□AMINATION

A. Verify that equipment is ready for electrical connection, wiring, and energization.

□□□□ ELECTRICAL CONNECTIONS

A. Make electrical connections in accordance with equipment manufacturer's instructions.

B. Make conduit connections to equipment using flexible conduit. Use liquid tight flexible conduit with watertight connectors in damp or wet locations.

C. Connect heat producing equipment using wire and cable with insulation suitable for temperatures encountered.

D. Provide receptacle outlet to accommodate connection with attachment plug.

E. Provide cord and cap where field-supplied attachment plug is required.

F. Install suitable strain-relief clamps and fittings for cord connections at outlet boxes and equipment connection boxes.

G. Install disconnect switches, controllers, control stations, and control devices to complete equipment wiring

requirements.

H. Install terminal block jumpers to complete equipment wiring requirements.

I. Install interconnecting conduit and wiring between devices and equipment to complete equipment wiring requirements.

END O□ SECTION

SECTION □□□□□

ELECTRICAL UTILITY SER□ICES

PART □ GENERAL

□□□□ SECTION INCLUDES

A. Meter bases.

□□□□ RE□ERENCES

A. NECA (INST) - NECA Standard of Installation; National Electrical Contractors Association; latest edition.

B. NFPA 70 - National Electrical Code; National Fire Protection Association.

C. RMP 6 State ESR.

□□□□ SYSTEM DESCRIPTION

A. Service Entrance: as acceptable to the electrical utility company.

□□□□ SUBMITTALS

A. See Section 01300 - Administrative Requirements, for submittal procedures.

B. Product Data: Provide ratings and dimensions of transformer cabinets and meter bases.

□□□□ □UALITY ASSURANCE

A. Perform work in accordance with utility company written requirements and NFPA 70.

1. Maintain one copy of each document on site.

B. Products: Listed and classified by Underwriters Laboratories, Inc. as suitable for the purpose specified and indicated.

PART □ PRODUCTS

□□□□ COMPONENTS

A. Meter: Furnished by utility company.

B. Utility Transformer Pad: Prefabricated precast concrete transformer pad with cable pit or vault as required by utility company.

C. Other Components: As required by utility company.

PART □ E□ECUTION

□□□□ PREPARATION

A. Arrange with utility company to obtain permanent electric service to the Project.

B. Verify that field measurements are as indicated on utility company drawings.

INSTALLATION

A. Install service rack, weatherhead, transformer pad, metering transformer cabinets, and meter base as required by utility company.

B. Install in accordance with NECA "Standard of Installation" & NFPA 70, RMP 6 State ESR.

END OF SECTION

SECTION □□□□□

ENCLOSED S□ ITCHES

PART □ GENERAL

□□□□ SECTION INCLUDES

A. Fusible switches.

□□□□ RE□ERENCES

A. NECA (INST) - NECA Standard of Installation; National Electrical Contractors Association; latest edition.

B. NEMA FU 1 - Low Voltage Cartridge Fuses; National Electrical Manufacturers Association; latest edition.

C. NEMA KS 1 - Enclosed and Miscellaneous Distribution Equipment Switches (600 Volts Maximum); National Electrical Manufacturers Association; latest edition.

D. NETA STD ATS - Acceptance Testing Specifications for Electrical Power Distribution Equipment and Systems; International Electrical Testing Association; latest edition.

E. NFPA 70 - National Electrical Code; National Fire Protection Association.

□□□□ SUBMITTALS

A. See Section 01300 - Administrative Requirements, for submittal procedures.

B. Product Data: Provide switch ratings and enclosure dimensions.

C. Project Record Documents: Record actual locations of enclosed switches.

□□□□ □UALITY ASSURANCE

A. Conform to requirements of NFPA 70.

B. Manufacturer Qualifications: Company specializing in manufacturing the products specified in this section with minimum three years documented experience and with service facilities within 100 miles of Project.

C. Products: Listed and classified by Underwriters Laboratories, Inc. as suitable for the purpose specified and indicated.

PART □ PRODUCTS

□□□□ COMPONENTS

A. Fusible Switch Assemblies: NEMA KS 1, Type HD enclosed load interrupter knife switch.

1. Externally operable handle interlocked to prevent opening front cover with switch in ON position.

2. Handle lockable in OFF position.

3. Fuse clips: Designed to accommodate NEMA FU1, Class R fuses.

B. Enclosures: NEMA KS 1.

1. Interior Dry Locations: Type 1.

2. Exterior Locations: Type 3R.

3. Booster Pump, Well House, and Vault locations: NEMA Type 4.

PART □ E□ECUTION

□□□□ INSTALLATION

A. Install in accordance with NECA Standard of Installation.

B. Install fuses in fusible disconnect switches.

C. Apply adhesive tag on inside door of each fused switch indicating NEMA fuse class and size installed.

□□□□ □IELD □UALITY CONTROL

A. Perform field inspection in accordance with Section 01400.

B. Inspect and test in accordance with NETA STD ATS, except Section 4.

C. Perform inspections and tests listed in NETA STD ATS, Section 7.5.

END O□ SECTION

SECTION □□□□□

ENCLOSED MOTOR CONTROLLERS

PART □ GENERAL

□□□□ SECTION INCLUDES

A. Manual motor controllers.

B. Magnetic motor controllers.

C. Automatic Controllers

D. Combination magnetic motor controllers and disconnects.

E. Soft Start

F. SPD – Surge Protection Device

□□□□ RELATED SECTIONS

A. Section 05070 - Hangers and Supports.

B. Section 05075 - Electrical Identification: Engraved nameplates.

C. Section 05425-Variable Frequency Controller

D. Section 05491 - Fuses.

□□□□ RE□ERENCES

A. NEMA ICS 7.1 - Safety Standards for Construction and Guide for Selection, Installation, and Operation of Adjustable Speed Drive Systems; National Electrical Manufacturers Association; latest edition.

B. NEMA ICS 7 - Industrial Control and Systems: Adjustable Speed Drives; National Electrical Manufacturers Association; latest edition.

C. NEMA 250 - Enclosures for Electrical Equipment (1000 Volts Maximum); National Electrical Manufacturers Association; latest edition.

D. NECA (INST) - NECA Standard of Installation; National Electrical Contractors Association; latest edition.

E. NEMA AB 1 - Molded Case Circuit Breakers and Molded Case Switches; National Electrical Manufacturers Association; latest edition.

F. NEMA ICS 2 - Industrial Control and Systems: Controllers, Contactors, and Overload Relays, Rated Not More Than 2000 Volts AC or 750 Volts DC; National Electrical Manufacturers Association; latest edition.

G. NEMA ICS 5 - Industrial Control and Systems: Control Circuit and Pilot Devices; National Electrical Manufacturers Association; latest edition.

H. NEMA ICS 6 - Industrial Control and Systems: Enclosures; National Electrical Manufacturers Association; latest edition.

I. NEMA KS 1 - Enclosed and Miscellaneous Distribution Equipment Switches (600 Volts Maximum); National Electrical Manufacturers Association; latest edition.

J. NETA STD ATS - Acceptance Testing Specifications for Electrical Power Distribution Equipment and Systems; International Electrical Testing Association; latest edition.

K. NFPA 70 - National Electrical Code; National Fire Protection Association.

SUBMITTALS

A. See Section 01300 - Administrative Requirements, for submittal procedures.

B. Product Data: Provide catalog sheets showing voltage, controller size, ratings and size of switching and overcurrent protective devices, short circuit ratings, dimensions, and enclosure details.

C. Test Reports: Indicate field test and inspection procedures and test results.

D. Manufacturer's Instructions: Indicate application conditions and limitations of use stipulated by testing agency. Include instructions for storage, handling, protection, examination, preparation, and installation of product.

E. Maintenance Data: Replacement parts list for controllers.

UALITY ASSURANCE

A. Conform to requirements of NFPA 70.

B. Manufacturer Qualifications: Company specializing in manufacturing the products specified in this section with minimum three years documented experience and with service facilities within 100 miles of Project.

C. Products: Listed and classified by Underwriters Laboratories, Inc. as suitable for the purpose specified and indicated.

PART PRODUCTS

MANU ACTURERS

A. Substitutions: See Section 01600 - Product Requirements.

MANUAL CONTROLLERS

A. Manual Motor Controllers: NEMA ICS 2, AC general-purpose, Class A, manually operated, full-voltage controller with overload element, red pilot light, NO auxiliary contact, and push button operator.

B. Fractional Horsepower Manual Controllers: NEMA ICS 2, AC general-purpose, Class A, manually operated, full-voltage controller for fractional horsepower induction motors, with thermal overload unit, red pilot light, and key operator.

C. Motor Starting Switches: NEMA ICS 2, AC general-purpose Class A manually operated, full-voltage controller for fractional horsepower induction motors, without thermal overload unit, with red pilot light and key operator.

D. Enclosures: NEMA ICS 6, NEMA Type4.

AUTOMATIC CONTROLLERS

A. Magnetic Motor Controllers: NEMA ICS 2, AC general-purpose Class A magnetic controller for induction motors rated in horsepower, with motor circuit protector.

B. Reversing Controllers: Include electrical interlock and integral time delay transition between FORWARD and REVERSE rotation.

C. Two-Speed Controllers: Include integral time delay transition between FAST and SLOW speeds.

D. Coil Operating Voltage: 120 volts, 60 Hertz.

E. Overload Relays: NEMA ICS 2; bimetal.

F. Motor Circuit Protector: NEMA AB 1, circuit breakers with integral instantaneous magnetic trip in each pole. All controllers shall include a three phase motor protector; Motor Saver Model 777, or acceptable equal.

G. Enclosures: NEMA ICS 6, NEMA Type 4.

H. SPD

ACCESSORIES

A. Auxiliary Contacts: NEMA ICS 2, 2 normally open contacts in addition to seal-in contact.

B. Cover Mounted Pilot Devices: NEMA ICS 5, standard duty oil-tight type.

C. Pilot Device Contacts: NEMA ICS 5, Form Z, rated A150.

D. Pushbuttons: Unguarded type.

E. Indicating Lights: LED.

F. Selector Switches: Rotary type.

G. Relays: NEMA ICS 2.

H. Control Power Transformers: 120 volt secondary, primary as required, in each motor starter. Provide fused primary, secondary, and bond unfused leg of secondary to enclosure.

COMBINATION CONTROLLERS

A. Combination Controllers: Combine motor controllers with disconnects in common enclosure. Obtain IEC Class 2 coordinated component protection.

B. Thermal Magnetic Circuit Breakers: NEMA AB 1, with integral thermal and instantaneous magnetic trip in each pole.

C. Motor Circuit Protector: NEMA AB 1, circuit breakers with integral instantaneous magnetic trip in each pole. All controllers shall include a three phase motor protector; Motor Saver Model 777, or acceptable equal.

D. Nonfusible Switch Assemblies: NEMA KS 1, enclosed knife switch with externally operable handle.

E. Fusible Switch Assemblies: NEMA KS 1, enclosed knife switch with externally operable handle. Fuse clips: Designed to accommodate Class R fuses.

F. SPD

SOFT START

A. All controllers for pump motors shall include soft start operation. The soft start shall provide adjustable ramp times for starting and stopping pumps to minimize system hammers. Soft starts shall be compatible with the controllers, and shall be acceptable to the City Engineer.

B. SPD

PART □ E□ECUTION

□□□□ INSTALLATION

A. Install enclosed controllers where indicated, in accordance with NECA Standard of Installation, NFPA70.

B. Install enclosed controllers plumb. Provide supports in accordance with Section 05070.

C. Height: 5 feet to operating handle.

D. Provide fuses for fusible switches; refer to Section 05491 for product requirements.

E. Select and install overload heater elements in motor controllers to match installed motor characteristics.

F. Provide engraved plastic nameplates; refer to Section 05075 for product requirements and location.

G. Neatly type label inside each motor controller door identifying motor served, nameplate horsepower, full load amperes, code letter, service factor, and voltage/phase rating. Place label in clear plastic holder.

H. Provide clearances around enclosed controllers according to NECA Standards & NFPA70E.

□□□□ □IELD □UALITY CONTROL

A. Perform field inspection and testing in accordance with Section 01400.

B. Inspect and test in accordance with NETA STD ATS, except Section 4.

C. Perform inspections and tests listed in NETA STD ATS, Section 7.16.2.

END O□ SECTION

SECTION □□□□□

□ARIABLE □RE□UENCY CONTROLLERS

PART □ GENERAL

□□□□ SECTION INCLUDES

A. Variable frequency controllers.

□□□□ RELATED SECTIONS

A. Section 05075 - Electrical Identification: Engraved nameplates.

B. Section 05491 - Fuses.

□□□□ RE□ERENCES

A. NEMA ICS 7.1 - Safety Standards for Construction and Guide for Selection, Installation, and Operation of Adjustable Speed Drive Systems; National Electrical Manufacturers Association; latest edition.

B. NEMA ICS 7 - Industrial Control and Systems: Adjustable Speed Drives; National Electrical Manufacturers Association; latest edition.

C. NEMA 250 - Enclosures for Electrical Equipment (1000 Volts Maximum); National Electrical Manufacturers Association; latest edition.

D. NETA STD ATS - Acceptance Testing Specifications for Electrical Power Distribution Equipment and Systems; International Electrical Testing Association; latest edition.

E. NFPA 70 - National Electrical Code; National Fire Protection Association.

□□□□ SUBMITTALS

A. See Section 01300 - Administrative Requirements, for submittal procedures.

B. Product Data: Provide catalog sheets showing voltage, controller size, ratings and size of switching and overcurrent protective devices, short circuit ratings, dimensions, and enclosure details.

C. Shop Drawings: Indicate front and side views of enclosures with overall dimensions and weights shown; conduit entrance locations and requirements; and nameplate legends.

D. Test Reports: Indicate field test and inspection procedures and test results.

E. Manufacturer's Instructions: Indicate application conditions and limitations of use stipulated by testing agency. Include instructions for storage, handling, protection, examination, preparation, and installation of product.

F. Manufacturer's Field Reports: Indicate start-up inspection findings.

G. Operation Data: NEMA ICS 7.1. Include instructions for starting and operating controllers, and describe operating limits that may result in hazardous or unsafe conditions.

H. Maintenance Data: NEMA ICS 7.1. Include routine preventive maintenance schedule.

□□□□ □UALITY ASSURANCE

A. Conform to requirements of NFPA 70.

B. Manufacturer Qualifications: Company specializing in manufacturing the products specified in this section with minimum three years documented experience and with service facilities within 100 miles of Project.

C. Products: Listed and classified by Underwriters Laboratories, Inc. as suitable for the purpose specified and indicated.

D. Conform to requirements of IEEE 519-1992.

DELIVERY STORAGE AND HANDLING

A. Store in a clean, dry space. Maintain factory wrapping or provide an additional heavy canvas or heavy plastic cover to protect units from dirt, water, construction debris, and traffic.

B. Handle in accordance with manufacturer's written instructions. Lift only with lugs provided for the purpose. Handle carefully to avoid damage to components, enclosure, and finish.

MAINTENANCE SERVICE

A. Provide service and maintenance of controller for one year from Date of Substantial Completion.

PART 2 PRODUCTS

MANUFACTURERS

A. Substitutions: See Section 01600 - Product Requirements.

DESCRIPTION

A. Variable Frequency Controllers: Enclosed controllers suitable for operating the indicated loads, in conformance with requirements of NEMA ICS 7. Select unspecified features and options in accordance with NEMA ICS 3.1.

1. Employ microprocessor-based inverter logic isolated from power circuits.

2. Design for ability to operate controller with motor disconnected from output.

3. Harmonies Filter to meet IEEE 519 Levels

B. Enclosures: NEMA 250, Type 4, suitable for equipment application in places regularly open to the public.

C. Finish: Manufacturer's standard enamel.

OPERATING REQUIREMENTS

A. Displacement Power Factor: Between 1.0 and 0.95, lagging, over entire range of operating speed and load.

B. Operating Ambient: 0 degrees C to 40 degrees C.

C. Minimum Efficiency at Full Load: as per manufacturer’s standard design.

D. Time to Stop: as per manufacturer’s recommendations.

E. Volts Per Hertz Adjustment: Plus or minus 10 percent.

F. Current Limit Adjustment: 60 to 110 percent of rated.

G. Acceleration Rate Adjustment: 0.5 to 30 seconds.

H. Deceleration Rate Adjustment: 1 to 30 seconds.

I. Input Signal: 4 to 20 mA.

□□□□ COMPONENTS

A. Display: Provide integral digital display to indicate output voltage, output frequency, and output current.

B. Status Indicators: Separate indicators for over-current, over-voltage, ground fault, over-temperature, and input power ON.

C. Furnish HAND-OFF-AUTOMATIC selector switch and manual speed control.

D. Include under-voltage release.

E. Control Power Source: Separate circuit.

F. Door Interlocks: Furnish mechanical means to prevent opening of equipment with power connected, or to disconnect power if door is opened; include means for defeating interlock by qualified persons.

G. Safety Interlocks: Furnish terminals for remote contact to inhibit starting under both manual and automatic mode.

H. Control Interlocks: Furnish terminals for remote contact to allow starting in automatic mode.

I. Manual Bypass: Furnish contactor, motor running overload protection, and short circuit protection for full voltage, non-reversing operation of the motor. Include isolation switch to allow maintenance of inverter during bypass operation.

J. Emergency Stop: Use dynamic brakes for emergency stop function.

K. Disconnecting Means: Include integral fused disconnect switch on the line side of each controller.

L. Wiring Terminations: Match conductor materials and sizes indicated.

□□□□ SOURCE □UALITY CONTROL

A. Shop inspect and perform standard productions tests for each controller.

B. Make completed controller available for inspection at manufacturer's factory prior to packaging for shipment. Notify Owner at least 7 days before inspection is allowed.

C. Allow witnessing of factory inspections and tests at manufacturer's test facility. Notify Owner at least 7 days before inspections and tests are scheduled.

PART □ E□ECUTION

□□□□ E□AMINATION

A. Verify that surface is suitable for controller installation.

B. Do not install controller until building environment can be maintained within the service conditions required by the manufacturer.

C. Verify that field measurements are as indicated on shop drawings.

□□□□ INSTALLATION

A. Install in accordance with NEMA ICS 7.1 and manufacturer's instructions.

B. Tighten accessible connections and mechanical fasteners after placing controller.

C. Provide fuses in fusible switches; refer to Section 05491 for product requirements.

D. Select and install overload heater elements in motor controllers to match installed motor characteristics.

E. Provide engraved plastic nameplates; refer to Section 05075 for product requirements and location.

F. Neatly type label inside each motor controller door identifying motor served, nameplate horsepower, full load amperes, code letter, service factor, and voltage/phase rating. Place in clear plastic holder.

□□□□ □IELD □UALITY CONTROL

A. Perform field inspection and testing in accordance with Section 01400.

B. Inspect and test in accordance with NETA STD ATS, except Section 4.

C. Perform inspections and tests listed in NETA STD ATS, Section 7.16.2.

□□□□ MANU□ACTURER□S □IELD SER□ICES

A. Provide the service of the manufacturer's field representative to prepare and start controllers.

□□□□ AD□USTING

A. Make final adjustments to installed controller to assure proper operation of load system. Obtain performance requirements from installer of driven loads.

□□□□ DEMONSTRATION

A. Demonstrate operation of controllers in automatic and manual modes.

END O□ SECTION

SECTION □□□□□

PANELBOARDS

PART □ GENERAL

□□□□ SECTION INCLUDES

A. Distribution panel boards.

B. Branch circuit panel boards.

C. Load centers.

□□□□ RELATED SECTIONS

A. Section 05075 - Electrical Identification.

□□□□ RE□ERENCES

A. NECA (INST) - NECA Standard of Installation; National Electrical Contractors Association; latest edition.

B. NEMA AB 1 - Molded Case Circuit Breakers and Molded Case Switches; National Electrical Manufacturers Association; latest edition.

C. NEMA ICS 2 - Industrial Control and Systems: Controllers, Contactors, and Overload Relays, Rated Not More Than 2000 Volts AC or 750 Volts DC; National Electrical Manufacturers Association; latest edition.

D. NEMA KS 1 - Enclosed and Miscellaneous Distribution Equipment Switches (600 Volts Maximum); National Electrical Manufacturers Association; latest edition.

E. NEMA PB 1 - Panel boards; National Electrical Manufacturers Association; latest edition.

F. NEMA PB 1.1 - General Instructions for Proper Installation, Operation and Maintenance of Panel boards Rated 600 Volts or Less; National Electrical Manufacturers Association; latest edition.

G. NETA STD ATS - Acceptance Testing Specifications for Electrical Power Distribution Equipment and Systems; International Electrical Testing Association; latest edition.

H. NFPA 70 - National Electrical Code; National Fire Protection Association.

□□□□ SUBMITTALS

A. See Section 01300 - Administrative Requirements, for submittal procedures.

B. Shop Drawings: Indicate outline and support point dimensions, voltage, main bus ampacity, integrated short circuit ampere rating, circuit breaker and fusible switch arrangement and sizes.

C. Manufacturer's Installation Instructions: Indicate application conditions and limitations of use stipulated by product testing agency. Include instructions for storage, handling, protection, examination, preparation, and installation of product.

D. Project Record Documents: Record actual locations of panel boards and record actual circuiting arrangements.

E. Maintenance Data: Include spare parts listing; source and current prices of replacement parts and supplies; and recommended maintenance procedures and intervals.

□□□□ □UALITY ASSURANCE

A. Conform to requirements of NFPA 70.

B. Manufacturer Qualifications: Company specializing in manufacturing the products specified in this section with minimum three years documented experience.

C. Products: Listed and classified by Underwriters Laboratories, Inc. as suitable for the purpose specified and indicated.

□□□□ MAINTENANCE MATERIALS

A. See Section 01600 - Product Requirements, for additional provisions.

B. Furnish two of each panel board key.

PART □ PRODUCTS

□□□□ DISTRIBUTION PANELBOARDS

A. Description: NEMA PB 1, circuit breaker type.

B. Panel board Bus: Copper, ratings as indicated. Provide copper ground bus in each panel board.

C. Minimum integrated short circuit rating: 65,000 AIC.

D. Fusible Switch Assemblies: NEMA KS 1, bolt on circuit breakers, quick-make, quick-break, load interrupter with externally operable handle. Provide interlock to prevent opening front cover with switch in ON position. Handle lockable in OFF position. Fuse clips.

E. Molded Case Circuit Breakers: NEMA AB 1, bolt on circuit breakers with integral thermal and instantaneous magnetic trip in each pole. Provide circuit breakers UL listed as Type HACR for air conditioning equipment branch circuits and motors.

F. Current Limiting Molded Case Circuit Breakers: NEMA AB 1, bolt on circuit breakers with integral thermal and instantaneous magnetic trip in each pole, coordinated with automatically resetting current limiting elements in each pole. Interrupting rating 100,000 symmetrical amperes, let-through current and energy level less than permitted for same size Class RK-5 fuse.

G. Controllers: NEMA ICS 2, AC general-purpose Class A magnetic controller for induction motors rated in horsepower, with bimetal overload relay.

   1. Coil operating voltage: 120 volts, 60 Hz.

   2. Size as shown on Drawings.

   3. Provide unit mounted control power transformer, RED indicating light in front cover.

H. Circuit Breaker Accessories: Trip units and auxiliary switches as indicated.

I. Enclosure: NEMA PB 1 cabinet box; type and size as required.

J. Cabinet Front: Surface type, fastened with concealed trim clamps, hinged door with flush lock, metal directory frame, finished in manufacturer's standard gray enamel.

□□□□ BRANCH CIRCUIT PANELBOARDS

A. Description: NEMA PB1, circuit breaker type, lighting and appliance branch circuit panel board.

B. Panel board Bus: Copper, ratings as indicated. Provide copper ground bus in each panel board; provide insulated ground bus where scheduled.

C. Minimum Integrated Short Circuit Rating: As indicated.

D. Molded Case Circuit Breakers: NEMA AB 1, bolt-on type thermal magnetic trip circuit breakers, with common trip handle for all poles.

   1. Type SWD for lighting circuits.

   2. Class A ground fault circuit interrupter breakers where scheduled.

E. Current Limiting Molded Case Circuit Breakers: NEMA AB 1, bolt on circuit breakers with integral thermal and instantaneous magnetic trip in each pole, coordinated with automatically resetting current limiting elements in each pole. Interrupting rating 100,000 symmetrical amperes, let-through current and energy level less than permitted for same size Class RK-5 fuse.

F. Enclosure: NEMA PB 1, Type 1; Indoor, Outdoor-3R, Booster, well and vault-type 4.

G. Cabinet Front: Flush cabinet front with concealed trim clamps, concealed hinge, metal directory frame, and flush lock all keyed alike. Finish in manufacturer's standard gray enamel.

□□□□ LOAD CENTERS

A. Description: Circuit breaker load center, with bus ratings as indicated.

B. Minimum Integrated Short Circuit Rating: 10,000 amperes rms symmetrical.

C. Molded Case Circuit Breakers: NEMA AB 1, bolt-on type thermal magnetic trip circuit breakers, with common trip handle for all poles.

   1. Type SWD for lighting circuits.

   2. Class A ground fault circuit interrupter breakers where indicated.

D. Enclosure: NEMA PB 1, Type 1. Indoor, Outdoor-3R, Booster, well and vault-type 4.

E. Box: Flush type with door, and pull ring and latch on door. Finish in manufacturer's standard gray enamel.

PART □ E□ECUTION

□□□□ INSTALLATION

A. Install panel boards in accordance with NEMA PB 1.1 and the NECA Standard of Installation.

B. Install panel boards plumb. Install recessed panel boards flush with wall finishes.

C. Height: 6 feet to top of panel board; install panel boards taller than 6 feet with bottom no more than 4 inches above floor.

D. Provide filler plates for unused spaces in panel boards.

E. Provide typed circuit directory for each branch circuit panel board. Revise directory to reflect circuiting changes required to balance phase loads.

F. Provide engraved plastic nameplates under the provisions of Section 05075.

G. Provide spare conduits out of each recessed panel board to an accessible location above ceiling. Identify each as SPARE.

H. Ground and bond panel board enclosure as required by NFPA70.

□□□□ □IELD □UALITY CONTROL

A. Perform field inspection and testing in accordance with Section 01400.

B. Inspect and test in accordance with NETA STD ATS, except Section 4.

C. Perform inspections and tests listed in NETA STD ATS, Section 7.4 for switches, Section 7.5 for circuit breakers.

□□□□ AD□USTING

A. Measure steady state load currents at each panel board feeder; rearrange circuits in the panel board to balance the phase loads to within 20 percent of each other. Maintain proper phasing for multi-wire branch circuits.

END O□ SECTION

SECTION □□□□□

INTERIOR LUMINAIRES

PART □ GENERAL

□□□□ SECTION INCLUDES

A. Interior luminaries for buildings to include:

1. Interior luminaires and accessories.

2. Ballasts.

3. Lamps.

4. Luminaire accessories.

□□□□ RE□ERENCES

A. ANSI C78.379 - American National Standard for Electric Lamps -- Reflector Lamps -- Classification of Beam Patterns; latest edition.

B. ANSI C82.1 - American National Standard Specifications for Fluorescent Lamp Ballasts; latest edition.

C. NEMA WD 6 - Wiring Devices - Dimensional Requirements; National Electrical Manufacturers Association; latest edition.

D. NFPA 70 - National Electrical Code; National Fire Protection Association.

E. NFPA 101 - Code for Safety to Life from Fire in Buildings and Structures; National Fire Protection Association.

□□□□ SUBMITTALS

A. See Section 01300 - Administrative Requirements, for submittal procedures.

B. Shop Drawings: Indicate dimensions and components for each luminaire that is not a standard product of the manufacturer.

C. Product Data: Provide dimensions, ratings, and performance data.

D. Manufacturer's Installation Instructions: Indicate application conditions and limitations of use stipulated by product testing agency specified under Quality Assurance. Include instructions for storage, handling, protection, examination, preparation, and installation of product.

E. Operation and Maintenance Data: Instructions for each product.

□□□□ □UALITY ASSURANCE

A. Conform to requirements of NFPA 70 and NFPA 101.

B. Manufacturer Qualifications: Company specializing in manufacturing the products specified in this section with minimum three years documented experience.

C. Products: Listed and classified by Underwriters Laboratories, Inc. as suitable for the purpose specified and indicated.

□□□□ E□TRA MATERIALS

A. See Section 01600 - Product Requirements, for additional provisions.

B. Furnish one replacement lamps for each lamp type.

C. Furnish one of each ballast type.

PART □ PRODUCTS

□□□□ LUMINAIRES

A. Furnish products as indicated in Schedule included on the Drawings.

B. Substitutions: See Section 01600 - Product Requirements.

□□□□ BALLASTS AND CONTROL UNITS

A. Fluorescent Ballasts: ANSI C82.1, high power factor type electronic ballast, suitable for lamps specified.

1. Voltage: 120 volts.

2. Certify fluorescent ballast design and construction by Certified Ballast Manufacturers, Inc.

□□□□ LAMPS

A. Lamp Types: As specified for each luminaire.

PART □ E□ECUTION

□□□□ INSTALLATION

A. Install suspended luminaires using pendants supported from swivel hangers. Provide pendant length required to suspend luminaire at indicated height.

B. Install surface mounted luminaires plumb and adjust to align with building lines and with each other. Secure to prevent movement.

C. Install wall mounted luminaires at height as indicated on Drawings.

D. Install accessories furnished with each luminaire.

E. Connect luminaires to branch circuit outlets provided under Section 05138 using flexible conduit.

F. Make wiring connections to branch circuit using building wire with insulation suitable for temperature conditions within luminaire.

G. Bond products and metal accessories to branch circuit equipment grounding conductor.

H. Install specified lamps in each emergency lighting unit.

□□□□ □IELD □UALITY CONTROL

A. Perform field inspection in accordance with Section 01400.

B. Operate each luminaire after installation and connection. Inspect for proper connection and operation.

AD USTING

A. Aim and adjust luminaires as indicated.

CLEANING

A. Clean electrical parts to remove conductive and deleterious materials.

B. Remove dirt and debris from enclosures.

C. Clean photometric control surfaces as recommended by manufacturer.

D. Clean finishes and touch up damage.

DEMONSTRATION AND INSTRUCTIONS

A. Demonstrate luminaire operation for minimum of two hours.

PROTECTION

A. Re-lamp luminaires that have failed lamps at Substantial Completion.

END O SECTION

SECTION □□□□□

E□TERIOR LUMINAIRES

PART □ GENERAL

□□□□ SECTION INCLUDES

A. Exterior luminaires for buildings, such as pump houses, to include:

1. Exterior luminaires and accessories.

2. Ballasts.

3. Lamps.

4. Luminaire accessories.

□□□□ RE□ERENCES

A. ANSI C78.379 - American National Standard for Electric Lamps -- Reflector Lamps -- Classification of Beam Patterns; latest edition.

B. ANSI C82.1 - American National Standard Specifications for Fluorescent Lamp Ballasts; latest edition.

C. ANSI C82.4 - American National Standard for Ballasts for High-Intensity-Discharge and Low Pressure Sodium Lamps (Multiple-Supply Type); latest edition.

D. NFPA 70 - National Electrical Code; National Fire Protection Association.

□□□□ SUBMITTALS

A. See Section 01300 - Administrative Requirements, for submittal procedures.

B. Shop Drawings: Indicate dimensions and components for each luminaire which is not a standard product of the manufacturer.

C. Product Data: Provide dimensions, ratings, and performance data.

D. Manufacturer's Installation Instructions: Indicate application conditions and limitations of use stipulated by product testing agency. Include instructions for storage, handling, protection, examination, preparation, installation, and starting of product.

E. Maintenance Data: For each luminaire.

□□□□ □UALITY ASSURANCE

A. Conform to requirements of NFPA 70.

B. Manufacturer Qualifications: Company specializing in manufacturing the products specified in this section with minimum three years documented experience.

C. Electrical Components: Listed and classified by Underwriters Laboratories, Inc. as suitable for the purpose specified and indicated.

□□□□ E□TRA MATERIALS

A. See Section 01600 - Product Requirements, for additional provisions.

B. Furnish one of each type and wattage lamp installed.

PART □ PRODUCTS

□□□□ LUMINAIRES

A. Furnish products as indicated in Schedule included on the Drawings.

B. Substitutions: See Section 01600 - Product Requirements.

□□□□ BALLASTS

A. Fluorescent Ballasts: ANSI C82.1, high power factor type electronic ballast, suitable for lamps specified.

1. Provide low-temperature ballast suitable for lamps specified.

2. Voltage: 120 volts.

3. Certify fluorescent ballast design and construction by Certified Ballast Manufacturers, Inc.

4. Substitutions: See Section 01600 - Product Requirements.

B. High Intensity Discharge (HID) Pulse Start Ballasts: ANSI C82.4, mercury vapor lamp ballast, suitable for lamp specified.

1. Voltage: 120 volts.

C. LED

1. Voltage: 120 volts.

□□□□ LAMPS

A. Lamp Types: As specified for each luminaire.

PART □ E□ECUTION

□□□□ INSTALLATION

A. Install luminaires as indicated on the drawings.

B. Install surface mounted luminaires plumb and adjust to align with building lines and with each other. Secure to prevent movement.

C. Install accessories furnished with each luminaire.

D. Connect luminaires to branch circuit outlets provided under Section 05138.

E. Make wiring connections to branch circuit using building wire with insulation suitable for temperature conditions within luminaire.

F. Bond products and metal accessories to branch circuit equipment grounding conductor.

G. Install lamps in each luminaire.

□□□□ □IELD □UALITY CONTROL

A. Perform field inspection, testing, and adjusting in accordance with Section 01400.

B. Operate each luminaire after installation and connection. Inspect for improper connections and operation.

□□□□ AD□USTING

A. Aim and adjust luminaires to provide illumination levels and distribution as recommended by the manufacturer.

□□□□ CLEANING

A. Clean electrical parts to remove conductive and deleterious materials.

B. Remove dirt and debris from enclosures.

C. Clean photometric control surfaces as recommended by the manufacturer.

D. Clean finishes and touch up damage.

□□□□ DEMONSTRATION AND INSTRUCTIONS

A. Demonstrate luminaire operation for minimum of two hours.

□□□□ PROTECTION O□ □INISHED □ ORK

A. Re-lamp luminaires which have failed lamps at Substantial Completion.

END O□ SECTION

SECTION □□□□□

STREET LIGHTING

PART □ GENERAL

□□□□ SECTION INCLUDES

A. Street lighting for City streets.

□□□□ RELATED SECTIONS

A. Section 02112 - Trenching.

B. Section 05131 - Conduit.

C. Section 05123 - Building Wire and Cable.

D. Section 05138 - Boxes.

E. Section 05140 - Wiring Devices.

F. Section 05155 - Equipment Wiring.

□□□□ RE□ERENCES

A. See appropriate sections of these specifications.

□□□□ SUBMITTALS

A. See Section 01300 - Administrative Requirements, for submittal procedures.

B. Product Data: Provide manufacturer’s catalog information showing dimensions, configurations, and construction.

C. Manufacturer's Instructions: Indicate application conditions and limitations of use stipulated by product testing agency. Include instructions for storage, handling, protection, examination, preparation, and installation of product.

□□□□ □UALITY ASSURANCE

A. Conform to requirements of NFPA 70.

B. Products: Listed and classified by Underwriters Laboratories, Inc. as suitable for the purpose specified and indicated.

□□□□ COORDINATION

A. Obtain and review shop drawings, product data, manufacturer's wiring diagrams, and manufacturer's installation instructions for equipment furnished under this and other sections.

B. Determine connection locations and requirements.

C. Coordinate all work on lighting system with Rocky Mountain Power.

D. Sequence electrical connections to coordinate with start-up of equipment.

PART □ PRODUCTS

□□□□ MATERIALS

A. Street lights, including poles and luminaires, shall be as indicated on the drawings.

   1. Manufacturer: HADCO Division of Genlyte Thomas Group L.L.C., or acceptable equal.

B. Disconnect Switches: As specified in applicable Sections and in individual equipment sections.

C. Wiring Devices: As specified in Section 05140.

D. Wire and Cable: As specified in Section 05123.

E. Boxes: As specified in Section 05138. Junction box lids to be marked “Saratoga Springs Electric”.

F. Concrete: As specified in Section 03300.

G. Conduit

PART □ E□ECUTION

□□□□ E□AMINATION

A. Verify location of street light with Project Engineer.

B. Verify location and type of power source with Rocky Mountain Power.

□□□□ INSTALLATION □STREET LIGHTS

A. Construct concrete base for light pole; size and type to be according to manufacturer’s written instructions and recommendations. Anchor bolts shall be installed according to manufacturer’s template.

B. Install light poles and luminaires, with lamps, in accordance with manufacturer’s written instructions and recommendations. Poles shall be plumb and securely attached to the concrete base.

C. Install an electrical junction box near the base of each light pole.

D. Install an Electrical junction/fuse ground box four to ten feet from Rocky Mountain Power source, as indicated on drawings and according to the Rocky Mountain Power Streetlight Point of Disconnect Diagram.

E. Install underground electrical conductors in conduit from electrical junction/fuse ground box (Rocky Mountain Power Street Light point of Disconnect Ground Box) to electrical junction ground box at streetlight pole, as indicated on the drawings and as directed by the City Inspector. Conductors shall be #6, Copper, XHHW-2. Trenching shall be done as described in Section 02112. Conduit to be installed with sand bedding and 24-inches of cover. Trenches shall be backfilled and compacted to required densities, as directed by City Inspector.

F. The neutral conductor shall be bonded (as per NFPA 70, 250.4) at the Rocky Mountain Power Street Light Point of Disconnect Ground Box.

G. Connection to power source will be made by Rocky Mountain Power. The contractor shall leave a 5-foot pig-tail at the Power source to be used for the connection. The contractor shall provide a trench and run the conduit from the electrical junction/fuse ground box (Rocky Mountain Power Street Light point of Disconnect Ground Box) to the source, as required by Rocky Mountain Power.

H. Make electrical connection to light poles in accordance with equipment manufacturer's instructions and as indicated on the drawings.

I. All work shall be done in accordance with all appropriate electrical codes and with the requirements of Rocky Mountain Power.

□□□□ □IELD □UALITY CONTROL

A. Perform field inspection, testing, and adjusting in accordance with Section 01400.

B. Operate each luminaire after installation and connection. Inspect for improper connections and operation.

□□□□ AD□USTING

A. Aim and adjust luminaires to provide illumination levels and distribution as recommended by the manufacturer.

□□□□ CLEANING

A. Clean electrical parts to remove conductive and deleterious materials.

B. Remove dirt and debris from enclosures.

C. Clean finishes and touch up damage.

□□□□ OPERATIONAL DEMONSTRATION

A. Demonstrate luminaire operation for a minimum of 48 hours.

□□□□ PROTECTION O□ □INISHED □ ORK

A. Re-lamp luminaires which have failed lamps at Substantial Completion.

END O□ SECTION

SECTION □□□□□

OUTDOOR LIGHTING

PART □ GENERAL

□□□□ SECTION INCLUDES

A. Outdoor lighting

□□□□ RELATED SECTIONS

A. Section 02112 - Trenching.

B. Section 05131 - Conduit.

C. Section 05123 - Building Wire and Cable.

D. Section 05138 - Boxes.

E. Section 05140 - Wiring Devices.

F. Section 05155 - Equipment Wiring.

□□□□ RE□ERENCES

A. Illuminating Engineering Society of North America (IESNA) Lighting Handbook.

B. See appropriate related sections of these specifications.

□□□□ SUBMITTALS

A. See Section 01300 - Administrative Requirements, for submittal procedures.

B. Product Data: Provide manufacturer’s catalog information showing dimensions, configurations, and construction.

C. Manufacturer's Instructions: Indicate application conditions and limitations of use stipulated by product testing agency. Include instructions for storage, handling, protection, examination, preparation, and installation of product.

□□□□ □UALITY ASSURANCE

A. Conform to requirements of NFPA 70.

B. Products: Listed and classified by Underwriters Laboratories, Inc. as suitable for the purpose specified and indicated.

□□□□ COORDINATION

A. Obtain and review shop drawings, product data, manufacturer's wiring diagrams, and manufacturer's installation instructions for equipment furnished under this and other sections.

B. Determine connection locations and requirements.

C. Coordinate all work on lighting systems with Rocky Mountain Power.

D. Sequence electrical connections to coordinate with start-up of equipment.

LIGHTING REQUIREMENTS AND DESIGN STANDARDS

A. The purpose of lighting requirements is to require and set minimum standards for outdoor lighting to:

1. Provide for and control lighting in outdoor public places where public health, safety and welfare are potential concerns.

2. Protect drivers and pedestrians from the glare of non-vehicular light sources.

3. Protect neighbors and the night sky from nuisance glare and light trespass from improperly selected or poorly placed, aimed, applied, maintained or shielded light sources.

4. Promote energy-efficient lighting design and operation.

5. Protect and retain the intended visual character of the various venues of the City.

B. Applicability.

1. Uses that are proposed to operate during hours of darkness where there is public assembly and traverse, including but not limited to the following: residential, commercial, industrial, parking lots, sales lots, recreational and institutional uses, and sign, billboard, architectural and landscape lighting applications.

2. The City may require lighting be incorporated for other uses, applications and locations, as it deems necessary.

3. The glare-control requirements herein contained apply to lighting in all uses, applications and locations.

C. Definitions.

1. Lighting definitions shall be as described in the IESNA Lighting Handbook.

2. The following definitions are selected from the Handbook for ready reference.
   a. Full Cutoff - attribute of a lighting fixture from which no light is emitted at or above a horizontal plane drawn through the bottom of the fixture, and no more than 10% of the lamp's intensity is emitted at or above an angle 10 degrees below that horizontal plane, at all lateral angles around the fixture.
   b. Cutoff - attribute of a lighting fixture from which no more than 2.5% of the lamp's intensity is emitted at a horizontal plane drawn through the bottom of the fixture or above, and no more than 10% of the lamp's intensity is emitted at or above an angle 10 degrees below that horizontal plane, at all lateral angles around the fixture.
   c. Fully Shielded – attribute of a lighting fixture provided with internal and/or external shields and louvers to prevent brightness from lamps, reflectors, refractors and lenses from causing glare at normal viewing angles.
   d. Glare - excessive brightness in the field of view that causes loss in visual performance or annoyance, so as to jeopardize health, safety or welfare.
   e. Light Trespass – light emitted by a lighting fixture or installation, which is cast beyond the boundaries of the property on which the lighting installation is sited.

D. Design Criteria.

1. Illumination Levels. Outdoor lighting, as allowed by the City, shall have intensities and uniformities and glare control in accordance with the current recommended practices of the IESNA as contained in the IESNA Lighting Handbook and applicable Recommended Practices, except as may otherwise be required by the City.
   a. The design calculations for outdoor lighting installations shall be in accordance with the Lighting Handbook. This is includes, but is not limited to, calculation methods and procedures, photometric classifications, and photometric testing procedures.
   b. Illuminance selection should be based on the usage of the area to be illuminated, the level of activity, and night-time security requirements.

c. Parking Stalls, Sidewalks, footpaths, and grounds around open parking lots should be illuminated to a minimum of 0.5 fc, with a uniformity ratio of 4:1, average to minimum and a ratio of 20:1 maximum to minimum.
d. Trails and walkways in parks and public areas should be illuminated to a minimum of 0.5 fc, with a uniformity ratio of 4:1, average to minimum along the length of the trail and on all sides out to a distance of 10 m (30 ft.).
e. Locations where loitering and graffiti are likely to occur should be uniformly illuminated to a minimum of 1 fc, with a uniformity ratio of 4:1, average to minimum.

2. Lighting Fixture Design.
   a. Fixtures shall be of a type and design appropriate to the lighting application and shall be aesthetically acceptable to the City.
   b. For the lighting of predominantly horizontal surfaces, such as, but not limited to parking areas, roadways, vehicular and pedestrian passage areas, merchandising and storage areas, automotive-fuel dispensing facilities, automotive sales areas, loading docks, cul-de-sacs, active and passive recreation areas, building entrances, sidewalks, bicycle and pedestrian paths, and site entrances, fixtures shall be aimed straight down and shall meet IESNA full-cutoff criteria.
      (1) Fixtures with an aggregate rated lamp lumen output per fixture that does not exceed the rated output of a standard 60-watt incandescent lamp, i.e., 1,000 lumens, are except from the requirements of this paragraph.
   c. For the lighting of predominantly non-horizontal surfaces, such as, but not limited to, facades, landscaping, signs, billboards, fountains, displays and statuary, fixtures shall be fully shielded and shall be installed and aimed so as to not project their output into the windows of neighboring residences, adjacent uses, past the object being illuminated, skyward or onto public roadways.
      (1) Fixtures with an aggregate rated lamp lumen output per fixture that does not exceed the rated output of a standard 60-watt incandescent lamp, i.e., 1,000 lumens, are except from the requirements of this paragraph.
   d. “Barn lights”, aka “dusk-to-dawn lights”, where visible from other properties, shall not be permitted unless fully shielded.

3. Control of Nuisance and Disabling Glare.
   a. All lighting shall be aimed, located, designed, fitted and maintained so as not to present a hazard to drivers and pedestrians by impairing their ability to safely traverse and so as not to create a nuisance by projecting or reflecting objectionable light onto a neighboring use or property.
   b. Floodlights and spotlights, where their use is specifically approved by the City, shall be so shielded, installed and aimed that they do not project their output into the windows of neighboring residences, adjacent uses, past the object being illuminated, skyward or onto a public roadway or pedestrian way.
   c. Parking facility and vehicular and pedestrian way lighting (except for safety and security applications and all-night business operations), for commercial, industrial and institutional uses shall be automatically extinguished no later than one hour after the close of business or facility operation. When safety or security lighting is proposed for after-hours illumination, it shall not be in excess of thirty-three (33) percent of the number of fixtures required or permitted for illumination during regular business hours.
   d. Illumination for signs, billboards, building facades and/or surrounding landscapes for decorative, advertising or aesthetic purposes is prohibited between 11:00 p.m. and dawn, except that such lighting situated on the premises for a commercial establishment may remain illuminated while the establishment is actually open for business, and until one hour after closing.
   e. Vegetation screens shall not be employed to serve as the primary means for controlling glare.
      (1) Glare control shall be achieved primarily through the use of such means as cutoff fixtures, shields and baffles, and appropriate application of fixture mounting height, wattage, aiming angle and fixture placement.
   f. The illumination projected from any property to a residential use shall at no time exceed 0.1 footcandle, measured line-of-sight from any point on the receiving property.
   g. The illumination projected from any property to a non-residential use shall at no time exceed 1.0 footcandle, measured line-of-sight from any point on the receiving property.
   h. Externally illuminated billboards and signs shall be lighted by fixtures mounted at the top of the billboard or sign and aimed downward. The fixtures shall be designed, shielded and aimed to limit the light output onto and not beyond the sign or billboard.
   i. Except for certain recreational lighting, fixtures meeting IESNA full-cutoff criteria shall not be

mounted in excess of twenty (20) feet above finished grade. Fixtures not meeting IESNA full-cutoff criteria shall not be mounted in excess of sixteen (16) feet above finished grade.

j. The United States flag and the state flag shall be permitted to be illuminated from dusk till dawn. All other flags shall not be illuminated past 11:00 p.m. Flag lighting sources shall not exceed 10,000 lumens per flagpole. The light source shall have a beam spread no greater than necessary to illuminate the flag.

k. Under-canopy lighting, for such applications as gas/service stations, hotel/theater marquees, fast-food/bank/drugstore drive-ups, shall be accomplished using flat-lens full-cutoff fixtures aimed straight down and shielded in such a manner that the lowest opaque edge of the fixture shall be below the light sources at all lateral angles.

(1) The average illumination intensity in the area directly below the canopy shall not exceed 20 maintained footcandles and the maximum intensity shall not exceed 40 maintained footcandles.

l. The use of white strobe lighting for tall structures, such as smokestacks, chimneys, and radio/ communications/television towers is prohibited during hours of darkness, except as specifically required by FAA.

OUTDOOR LIGHTING PLAN SUBMISSION

A. For land development applications where site lighting is required and is proposed, lighting plans shall be submitted to the City Engineer for review and approval, with the preliminary and final land development plan applications and conditional use applications; and shall contain the following:

1. A plan or plans of the site, complete, with all structures, parking spaces, building entrances, traffic areas (both vehicular and pedestrian), landscaping that might interfere with lighting, and adjacent uses that might be adversely impacted by the lighting.
   a. The lighting plan shall contain a layout of all proposed fixtures by location, orientation, aiming direction, mounting heights, and types.
   b. The submission shall include, in addition to proposed area lighting, all other exterior lighting, such as, architectural, building-entrance, landscape, flag, signs, etc.

2. A 10 ft x 10 ft illuminance grid (point-by-point) plot of maintained horizontal footcandles overlaid on the site plan, plotted out to 0.0 footcandles, which demonstrates compliance with the light trespass, intensity and uniformity requirements as set forth in the Lighting Handbook.
   a. When the scale of the plan makes a 10 ft x 10 ft grid plot illegible, a larger grid spacing may be used.

3. The lamp lumen ratings and types, maintenance (light-loss) factors and IES file nomenclature used in calculating the illuminance levels.

4. Description of the proposed equipment, including fixture catalog cuts, photometrics, glare reduction devices, lamps, on/off control devices, mounting heights, pole foundation details and mounting methods.

5. Landscaping plans shall contain lighting fixture locations and shall demonstrate that the site lighting and landscaping have been coordinated to minimize conflict between vegetation and intended light distribution, both initially and at vegetation maturity.

6. A visual-impact plan that demonstrates appropriate steps have been taken to mitigate the potential consequences of on-site and off-site glare and to retain the intended character of the City.
   a. This plan may require the inclusion of initial vertical footcandle values at specific off-site venues, such as, bedroom windows of adjacent residential uses.

7. Plan notes. The following notes shall appear on the Lighting Plan:
   a. Post-approval alterations to lighting plans or intended substitutions for approved lighting equipment shall be submitted to the City for review and approval.
   b. The City reserves the right to conduct post-installation inspections to verify compliance with the City's requirements and approved Lighting Plan commitments, and if deemed appropriate by the City, to require remedial action at no expense to the City.
   c. All exterior lighting shall meet IESNA full-cutoff criteria unless otherwise approved by the City.

PART □ PRODUCTS

□□□□ MATERIALS

A. Outdoor lighting, including poles, luminaries and appurtenant items, shall be as indicated on the construction drawings.

1. Outdoor lighting shall conform to all the Lighting Requirement and Design Standards described above.

2. Outdoor lighting shall be acceptable to the City Engineer.

3. Fixtures shall be of the cutoff type, in accordance with the candlepower distribution classification of the Lighting Handbook.
   a. The manufacturer of the fixtures shall provide certification of the cutoff classification based on photometric testing performed in accordance with the Lighting Handbook and the applicable testing procedures referenced therein.
   b. Fixtures which do not meet the strict definition for cutoff fixtures, yet employ advanced or alternative technology which causes the photometric performance to approach that of cutoff fixtures, may be approved by the City Engineer, on a case-by-case basis.
      (1) Such fixtures include, but are not limited to, period-style fixtures with refractive globes and internal cutoff reflectors.

B. Conduit: See Section 05131

C. Wiring Devices: As specified in Section 05140.

D. Wire and Cable: As specified in Section 05123.

E. Boxes: As specified in Section 05138. Junction box lids to be marked “Street Lights” or “Lighting.”

F. Concrete: As specified in Section 03300.

PART □ E□ECUTION

□□□□ E□AMINATION

A. Verify location of outdoor lighting items with the City Engineer.

B. Verify location and type of power source with Rocky Mountain Power.

□□□□ INSTALLATION □OUTDOOR LIGHTING

A. Mounting heights of lighting fixtures shall be as described in Paragraph 1.07 above.

B. Poles supporting outdoor lighting fixtures shall be installed as indicated on the construction drawings that have been reviewed and accepted by the City Engineer.

1. Poles for outdoor lighting fixtures for the illumination of parking areas and located directly behind parking spaces, or where they could be hit by snow plows, shall be placed a minimum of five (5) feet outside paved areas or tire stops, or placed on concrete pedestals at least thirty (30) inches high above the pavement, or suitably protected by other methods approved by the City Engineer.
2. Construct concrete bases for light poles, as indicated on the construction drawings; size and type to be according to manufacturer’s written instructions and recommendations. Anchor bolts shall be installed according to manufacturer’s template.

3.. Install light poles on bases, in accordance with manufacturer’s written instructions and commendations. Poles shall be plumb and securely attached to the concrete base.

C. Install pole mounted cutoff fixtures, with lamps, in accordance with manufacturer's written instructions and recommendations.

1. Fixtures for the illumination of horizontal areas shall be aimed straight down, as described in Paragraph 1.07 above.

2. Cutoff fixtures shall be mounted plumb and level in accordance with the intended application of their design.
   a. The photometric nadir or the fixture (zero degree vertical angle of the candlepower distribution) shall be oriented plumb and the vertical angle of 90 degrees above the nadir (horizontal) shall be oriented level.
   b. Cutoff fixtures shall not be installed in a canted or tilted position which permits candlepower distribution above the horizontal.

D. Install other types of lighting fixtures, with lamps, for other types of installations as indicated on the construction drawings, in accordance with manufacturer's written instructions and recommendations.

E. All electrical feeds for lighting poles shall be run underground. No overhead feeds will be permitted.

1. Electrical feeds shall be installed as indicated on the construction drawings.

2. Install an electrical junction box near the base of light poles, as required.

3. Install underground electrical supply line lighting control panel to junction box at base of light pole, as indicated on the drawings and as directed by the City Inspector. Wire shall be in conduit. Trenching shall be done as described in Section 02112. Conduit to be installed with sand bedding and 24-inch cover. Trenches shall be backfilled and compacted to required densities, as directed by the City Inspector.

4. Make electrical connection to light poles in accordance with equipment manufacturer's instructions and as indicated on the drawings.

5. All work shall be done in accordance with all appropriate electrical codes requirements.

□□□□ □IELD □UALITY CONTROL

A. Perform field inspection, testing, and adjusting in accordance with Section 01400.

B. Operate each lighting fixture after installation and connection. Inspect for improper connections and operation.

□□□□ AD□USTING

A. Aim and adjust lighting fixtures to provide illumination levels and distribution as recommended by the manufacturer and as indicated on the construction plans.

□□□□ CLEANING

A. Clean electrical parts to remove conductive and deleterious materials.

B. Remove dirt and debris from enclosures.

C. Clean finishes and touch up damage.

□□□□ PROTECTION O□ □INISHED □ ORK

A. Re-lamp lighting fixtures which have failed lamps at Substantial Completion.

END O□ SECTION

STANDARD SANITARY SEWER DETAILS

INDEX:

SS-1 STANDARD SEWER TRENCH
SS-2 SANITARY SEWER MANHOLE
SS-3 SEWER SERVICE CONNECTION

NOTE:

REFER TO TIMPANOGOS SPECIAL SERVICE DISTRICT FOR GREASE TRAP DETAIL

SANITARY SEWER DETAILS

DATE:	APRIL 2014
DRAWING NAME:	SS-0
DRAWN BY:	ETL
CHECKED:	APPROVED:

REVISIONS

REV	DATE	BY	COMMENTS

SARATOGA SPRINGS CITY

1307 N. COMMERCE DR.
#200, SARATOGA SPRINGS,
UT 84045
PHONE: 801-766-9793
FAX: 8017669794

STANDARD DETAILS

SANITARY SEWER

SS-0

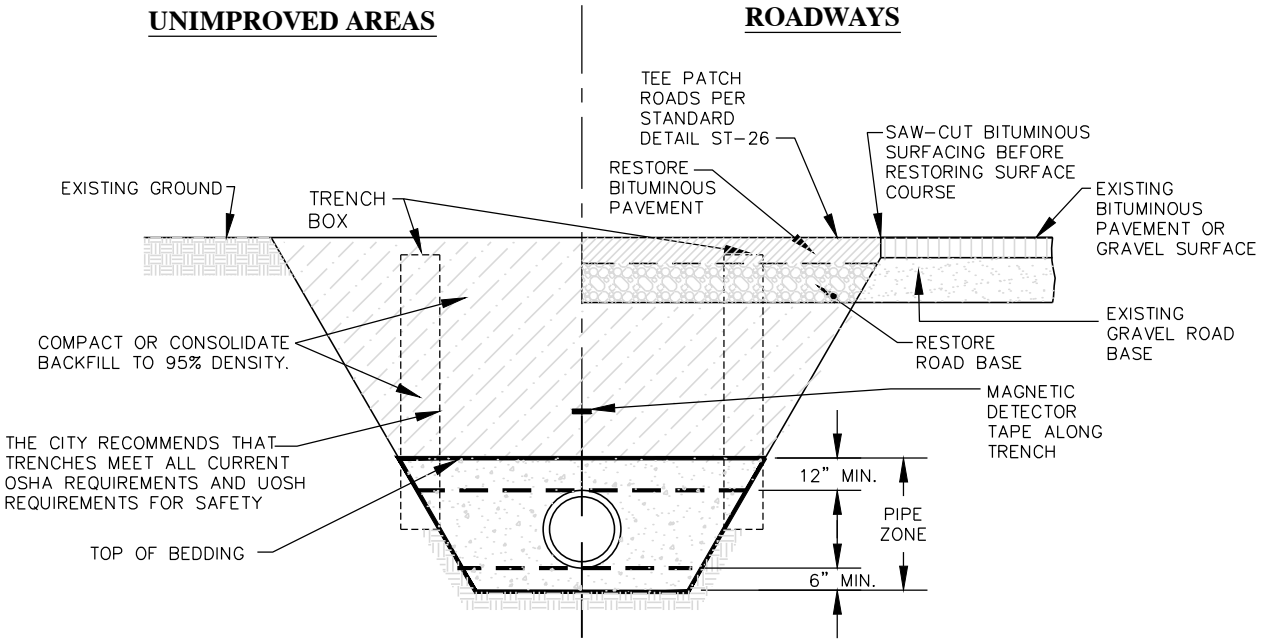

CROSS-SECTION: TYPICAL TRENCH

RECOMMENDED TRENCH QUANTITIES

PIPE DIAMETER (INCHES)		RECOMMENDED MAXIMUM TRENCH WIDTH FOR FILL IN PIPE ZONE		RECOMMENDED MAXIMUM WIDTH FOR FILL & SURFACING ABOVE PIPE ZONE MEASURED AT TOP OF TRENCH CENTERED ON PIPE	
inches	mm	inches	mm	inches	mm
4	101.6	72	1828.8	96	2438.4
6	152.4	72	1828.8	96	2438.4
8	203.2	72	1828.8	96	2438.4
10	254.0	72	1828.8	96	2438.4
12	304.8	72	1828.8	96	2438.4
15	381.0	72	1828.8	96	2438.4
18	457.2	72	1828.8	96	2438.4
21	533.4	72	1828.8	96	2438.4
24	609.6	72	1828.8	96	2438.4
30	762.0	84	2133.6	108	2743.2
36	914.4	84	2133.6	108	2743.2
42	1066.8	96	2438.4	120	3048.0
48	1219.2	96	2438.4	120	3048.0
54	1371.6	108	2743.2	132	3352.8
60	1524.0	120	3048.0	144	3657.6

NOTES:

1. THE CITY RECOMMENDS CONTRACTOR MEET ALL OF THE REQUIREMENTS ESTABLISHED FOR SAFE TRENCHING. (SEE OSHA AND UOSH REQUIREMENTS, LATEST EDITIONS).

2. CONTRACTOR SHALL LOCATE ALL UNDERGROUND UTILITIES BEFORE LAYING PIPE WITHIN 50' OF SAID UTILITIES WHICH MAY BE EXPOSED, DAMAGED OR CROSSED AS SHOWN ON THE DRAWINGS OR AS "BLUE STAKED". THE CONTRACTOR WILL MAKE ARRANGEMENTS WITH THE UTILITY COMPANY TO MOVE THE UTILITY IF NECESSARY OR OBTAIN PERMISSION FROM THE CITY ENGINEER TO MODIFY GRADE OF PIPELINE IN ORDER TO GO AROUND UTILITIES.

3. TESTING: ALL NEW SANITARY SEWERS TO BE "TELEVISED" AND NECESSARY REPAIRS MADE BEFORE ACCEPTANCE. ALL LINES SHALL BE PRESSURE TESTED TO 3.5 psi MIN. FOR 5 MINUTES. A MANDRAL OR BALL CAN BE USED TO VERIFY DEFORMATION OF A PIPE AS DETERMINED FROM THE VIDEO UNLESS SPECIFIED OTHERWISE. MANHOLES SHALL BE TESTED AS PER CITY STANDARDS.

4. ALL SEWER LINES TO BE INSTALLED IN PUBLIC RIGHT-OF-WAY OR RECORDED SEWER EASEMENT UNLESS OTHERWISE APPROVED BY THE CITY ENGINEER.

5. WHERE COLLAPSIBLE SOILS ARE ENCOUNTERED, FURNISH, PLACE AND COMPACT IMPORTED BACKFILL MATERIALS AS REQUIRED AND AS DIRECTED.

6. MIN. DEPTH SHALL BE 4' TO TOP OF PIPE. A 2' SPACING MUST BE MAINTAINED BETWEEN ALL WATER LINE PIPE CROSSINGS AND THE TOP OF THE SEWER PIPE.

7. IF THE SEWER LINE IS NOT 13' DEEP A NOTE MUST BE PLACED ON THE PLAT "SHALLOW SEWER DEPTHS. BEFORE EXCAVATING BASEMENTS, CONTRACTOR MUST VERIFY SEWER DEPTH"

8. MAX. DEPTH SHALL BE 20' TO THE TOP OF PIPE UNLESS APPROVED OTHERWISE BY THE CITY ENGINEER.

9. INSTALL MAGNETIC DETECTOR TAPE 3' ABOVE PIPE.

10. IN ROCKY SUB-GRADES A MINIMUM OF 18" CLEARANCE ON ALL SIDES OF THE PIPE SHALL BE PROVIDED.

STANDARD SEWER TRENCH

DATE: APRIL 2014

DRAWING NAME: SS-1

DRAWN BY: ETL

CHECKED: APPROVED:

REVISIONS

REV	DATE	BY	COMMENTS

SARATOGA SPRINGS CITY

1307 N. COMMERCE DR.
#200, SARATOGA SPRINGS, UT 84045
PHONE: 801-766-9793
FAX: 8017669794

STANDARD DETAILS

SANITARY SEWER

SS-1

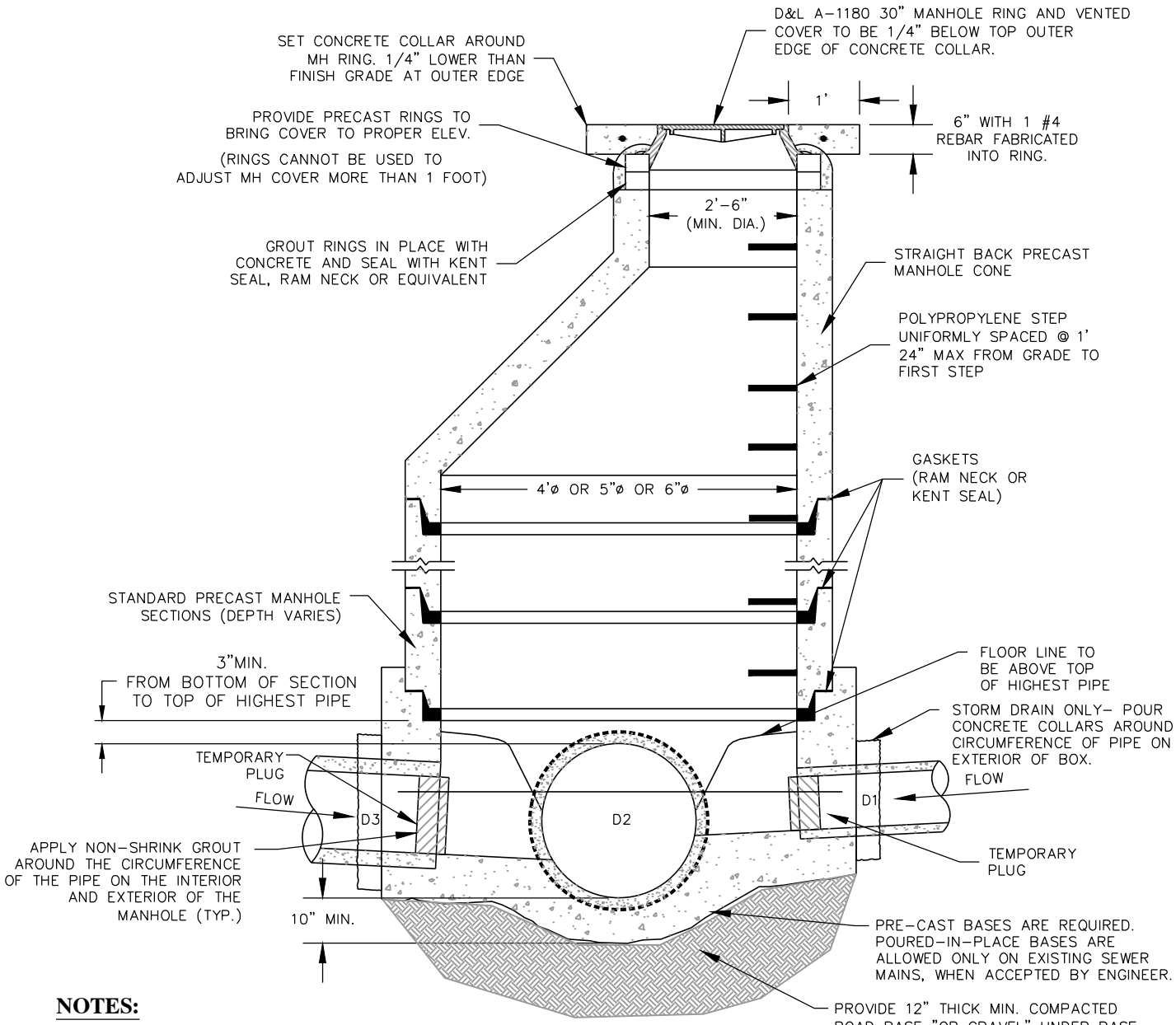

NOTES:

1. IF GRADE ALLOWS. INVERTS OF D1 & D3 SHALL BE REQUIRED TO MATCH TOP OF D2.
2. AFTER ALL GRADING AROUND MANHOLE HAS BEEN COMPLETED AND FINAL SURFACING IS IN PLACE REMOVE TEMPORARY PLUGS, DEBRIS AND PLYWOOD FROM INSIDE OF MANHOLES.
3. IF MANHOLE IS TO BE POURED IN PLACE, FOLLOW SAME PATTERN AS SHOWN EXCEPT USE 10" MIN WALL THICKNESS.
4. MANHOLES DEEPER THAN 20 FEET SHALL HAVE AN 18" THICK CONCRETE BASE.
5. CONE AND WALL SECTIONS SHALL CONFORM WITH ASTM C-478 STANDARD
6. ALL MANHOLES TO BE HS-20 RATED
7. MANHOLES WITH SOLID LIDS MUST BE EPOXY LINED.
8. MANHOLES OUTSIDE OF ROW SHALL HAVE SOLID LOCKING LIDS.
9. FLAT CAST RINGS ARE NOT PERMITTED
10. LID SHALL BE MARKED SS SEWER

SANITARY SEWER MANHOLE

DATE:	APRIL 2014
DRAWING NAME:	SS-2
DRAWN BY:	ETL
CHECKED:	APPROVED:

REVISIONS

REV	DATE	BY	COMMENTS

SARATOGA SPRINGS CITY

1307 N. COMMERCE DR.
#200, SARATOGA SPRINGS, UT 84045
PHONE: 801-766-9793
FAX: 8017669794

STANDARD DETAILS

SANITARY SEWER

SS-2

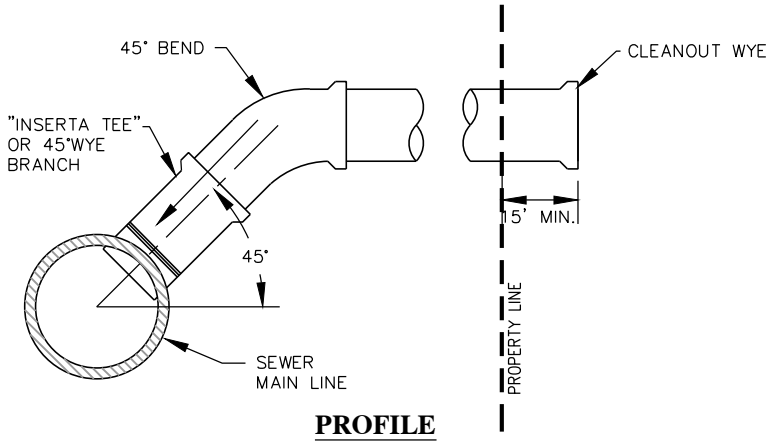

PROFILE

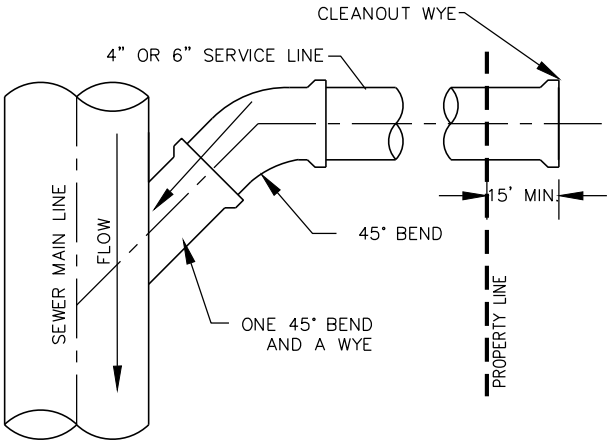

PLAN VIEW- 45° WYE BRANCH

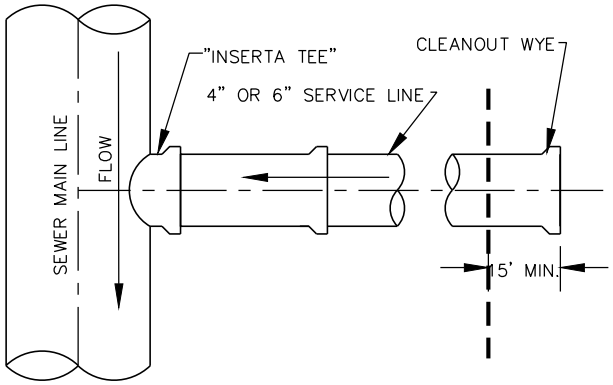

PLAN VIEW- "INSERTA TEE"

NOTES:

1. ALL RESIDENTIAL SERVICES SHALL BE 4" DIAMETER. NON-RESIDENTIAL SHALL BE 6" DIAMETER UNLESS DIRECTED OTHERWISE AND SHALL BE EXTENDED FROM MAIN LINES TO PROPERTY LINES.
2. EVERY RESIDENTIAL UNIT SHALL HAVE A SEPARATE SEWER LATERAL.
3. MINIMUM GRADE SHALL BE 2% FOR SERVICE LINES.
4. ALL 90° BENDS AT CONNECTION TO MAIN MUST BE CONSTRUCTED WITH ONE 45° BEND AND A WYE.
5. DIRECT NOSE ON IS ALLOWED WHEN CONNECTING TO EXISTING MAIN LINE. USE RUBBER BOOT AS PER CITY WITH STAINLESS STEEL STRAPS, IF REQUIRED. CORE CUT EXISTING PIPE, DO NOT BREAK OUT WITH A HAMMER.
6. NOTIFY CITY 24 HOURS IN ADVANCE OF ANY CONNECTION. EVERY CONNECTION TO BE INSPECTED BY CITY.
7. CONNECTION TO USERS TO BE DONE BY OTHERS.
8. CAST IRON WYE'S ARE REQUIRED FOR ALL NON-RESIDENTIAL CONNECTIONS.

SEWER SERVICE CONNECTION

DATE:	APRIL 2014
DRAWING NAME:	SS-3
DRAWN BY:	ETL
CHECKED:	APPROVED:

REVISIONS

REV	DATE	BY	COMMENTS

SARATOGA SPRINGS CITY

1307 N. COMMERCE DR.
#200, SARATOGA SPRINGS,
UT 84045
PHONE: 801-766-9793
FAX: 8017669794

STANDARD DETAILS

SANITARY SEWER

SS-3

STANDARD STORM DRAIN DETAILS

INDEX:

SD-1 STORM DRAIN TRENCH
SD-2 GUTTER INLET BOX
SD-3 CLEANOUT BOX
SD-4 COMBINATION GUTTER INLET & CLEANOUT BOX
SD-5 INLET/OUTLET TRASH GRATES

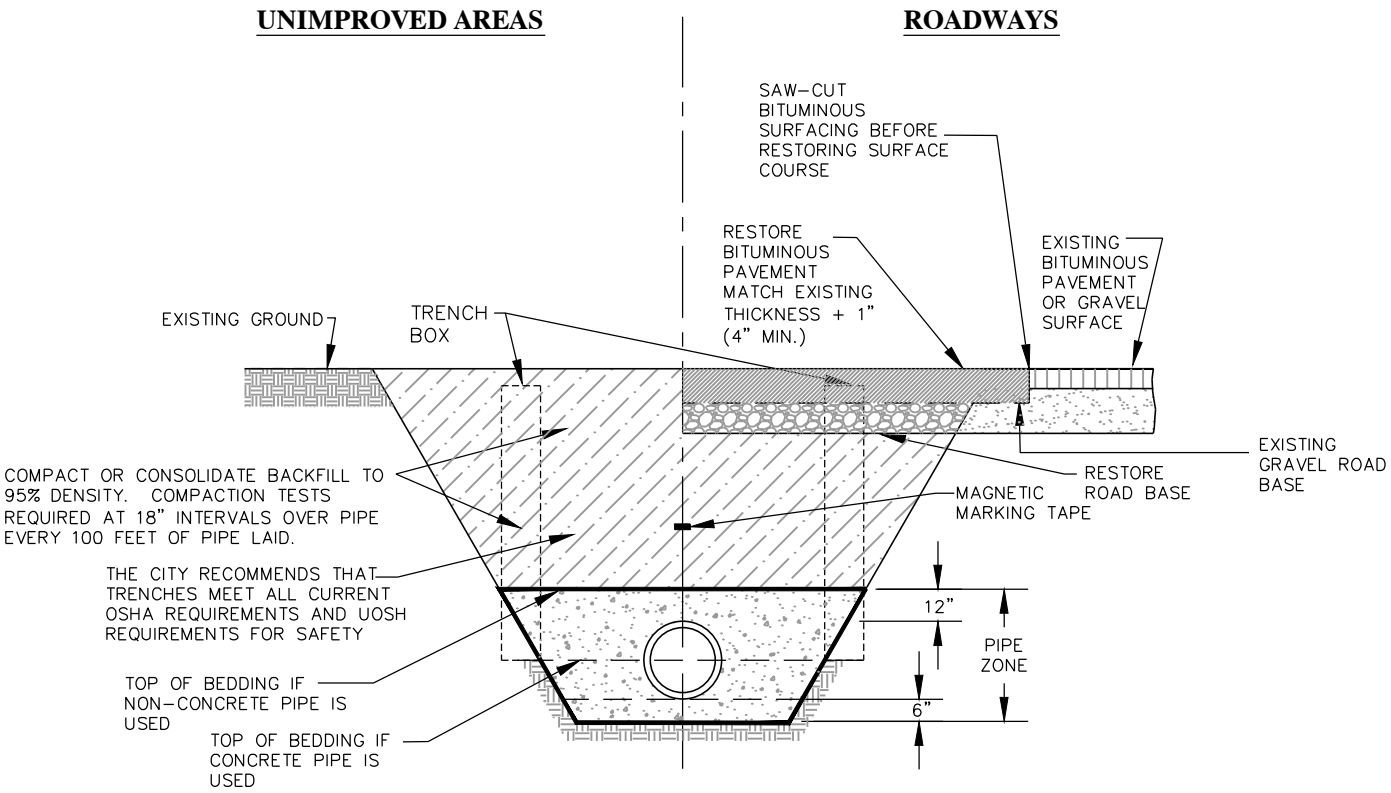

CROSS-SECTION: TYPICAL TRENCH

NOTES:

1. THE CITY RECOMMENDS CONTRACTOR MEET ALL OF THE REQUIREMENTS ESTABLISHED FOR SAFE TRENCHING. (SEE OSHA AND UOSH REQUIREMENTS, LATEST EDITIONS).

2. CONTRACTOR SHALL LOCATE ALL UNDERGROUND UTILITIES BEFORE LAYING PIPE WITHIN 50' OF SAID UTILITIES WHICH MAY BE EXPOSED, DAMAGED OR CROSSED AS SHOWN ON THE DRAWINGS OR AS "BLUE STAKED". THE CONTRACTOR WILL MAKE ARRANGEMENTS WITH THE UTILITY COMPANY TO MOVE THE UTILITY IF NECESSARY OR OBTAIN PERMISSION FROM THE CITY ENGINEER TO MODIFY GRADE OF PIPELINE IN ORDER TO GO AROUND UTILITIES.

3. TESTING: ALL STORM DRAIN LINES TO BE "VIDEOED" AND NECESSARY REPAIRS MADE BEFORE ACCEPTANCE. A MANDRAL OR BALL CAN BE USED TO VERIFY DEFORMATION OF A PIPE AS DETERMINED FROM THE VIDEO UNLESS SPECIFIED OTHERWISE.

4. ALL STORM DRAIN TO BE INSTALLED IN PUBLIC RIGHT-OF-WAY OR RECORDED DRAINAGE EASEMENT UNLESS OTHERWISE APPROVED BY THE CITY ENGINEER.

5. WHERE COLLAPSIBLE SOILS ARE ENCOUNTERED, FURNISH, PLACE AND COMPACT IMPORTED BACKFILL MATERIALS AS REQUIRED AND AS DIRECTED.

6. MIN. DEPTH OF COVER SHALL MEET MANUFACTURERS RECOMMENDATIONS.

7. IN ROCKY SUB-GRADES 18" OF CLEARANCE SHALL BE PROVIDED ON ALL SIDES OF PIPE.

8. INSTALL MAGNETIC DETECTOR TAPE 3' ABOVE PIPE IN TRENCH.

STORM DRAIN TRENCH

DATE:	APRIL 2014
DRAWING NAME:	SD-1
DRAWN BY:	ETL
CHECKED:	APPROVED:

REVISIONS

REV	DATE	BY	COMMENTS

SARATOGA SPRINGS CITY

1307 N. COMMERCE DR.
#200, SARATOGA SPRINGS, UT 84045
PHONE: 801-766-9793
FAX: 8017669794

STANDARD DETAILS

STORM DRAIN

SD-1

NOTES:

1. DESIGNED FOR AASHTO HS-20 LOADING.

2. DESIGNED ACCORDING TO ASTM C857-87 AND ASTM C858-83.

3. ALL SUMPS TO BE GROUTED WITH FLOW CHANNELS FORMED INTO THE BOTTOM OF THE BOX TO MINIMIZE DEBRIS ACCUMULATION

4. BICYCLE SAFE GRATES ONLY. PROVIDE TYPE 13 "A" GRATE, D&L I-3516, OR TYPE 16 "L" GRATE, D&L I-3517.

5. POUR CONCRETE COLLARS AROUND CIRCUMFERENCE OF PIPE ON EXTERIOR OF BOX.

6. USE NON-SHRINK GROUT AROUND CIRCUMFERENCE OF PIPE ON INTERIOR OF BOX

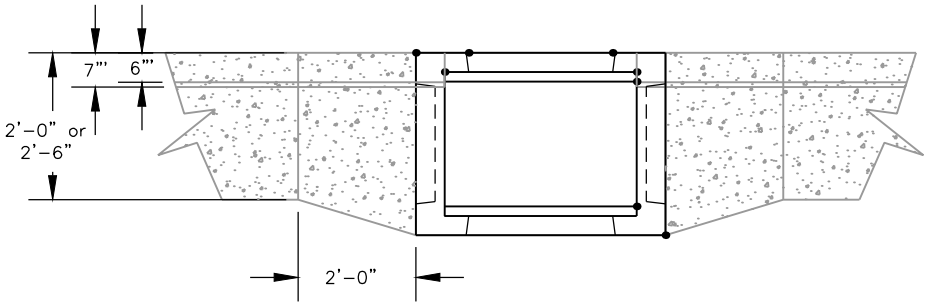

PLAN VIEW

RISER	
HT.	WT.
2'-0"	1,650
3'-0"	2,475
4'-0"	3,300
5'-0"	4,872
6'-0"	5,846

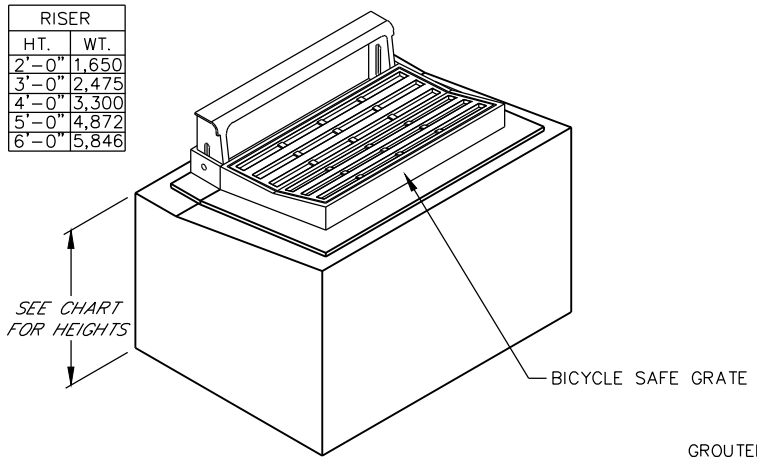

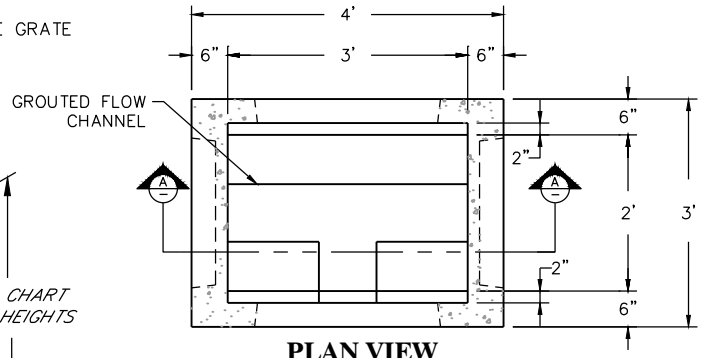

PLAN VIEW

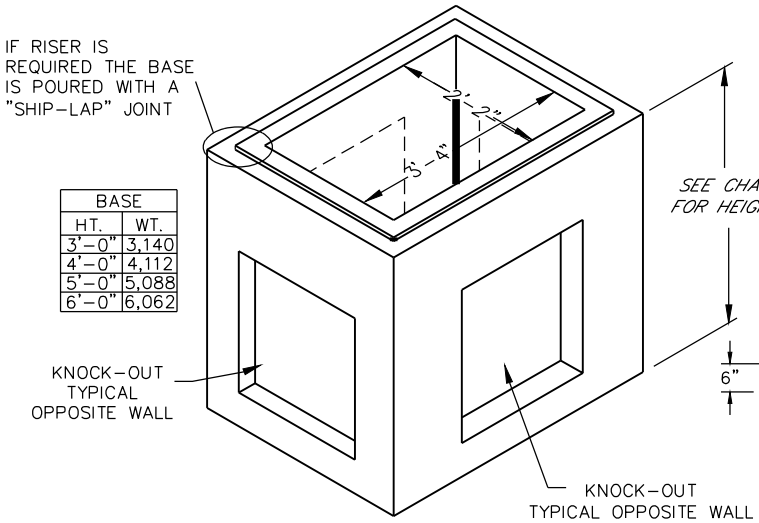

BASE	
HT.	WT.
3'-0"	3,140
4'-0"	4,112
5'-0"	5,088
6'-0"	6,062

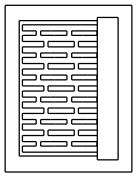

TYPE 16 "L" VALLEY
FRAME AND GRATE
680 lbs.

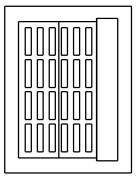

TYPE 13 "A" CURB-COMBO
FRAME AND GRATE
600 lbs.

GRATES

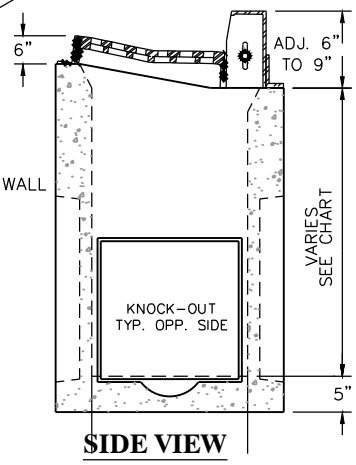

SIDE VIEW

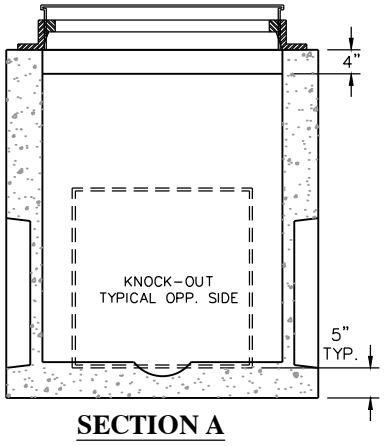

SECTION A

GUTTER INLET BOX

DATE:	APRIL 2014
DRAWING NAME:	SD-2
DRAWN BY:	ETL
CHECKED:	APPROVED:

REVISIONS

REV	DATE	BY	COMMENTS

SARATOGA SPRINGS CITY

1307 N. COMMERCE DR.
#200, SARATOGA SPRINGS,
UT 84045
PHONE: 801-766-9793
FAX: 8017669794

STANDARD DETAILS

STORM DRAIN

SD-2

NOTES:

1. BOTTOM OF BOX SHALL BE GROUTED TO ENSURE FLOW LINE OF PIPE IS FLUSH WITH BOTTOM OF BOX.

2. AMCOR CB110 OR EQUAL BOXES WILL BE ACCEPTED.

3. PRE-CAST MANHOLES ARE ALSO ACCEPTABLE. SEE DETAIL SS-2

4. "FLAT" CASTING RINGS AND COVERS ARE NOT ACCEPTABLE

5. DESIGN FOR AASHTO HS-20 LOADING

5. POUR CONCRETE COLLARS AROUND CIRCUMFERENCE OF PIPE ON EXTERIOR OF BOX.

6. USE NON-SHRINK GROUT AROUND CIRCUMFERENCE OF PIPE ON INTERIOR OF BOX.

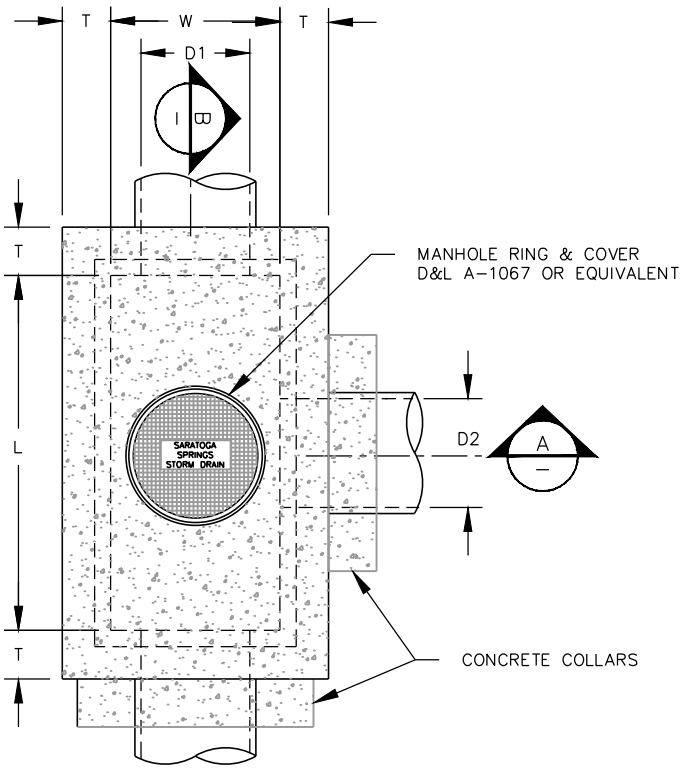

PLAN

DIMENSIONS	
W=	D1 + 12" (24" MIN.)
L=	D2 + 24" (44" MIN.)
T=	6" IF L IS LESS THAN OR EQUAL TO 5'-0"
T=	8" IF L IS GREATER THAN 5'-0"

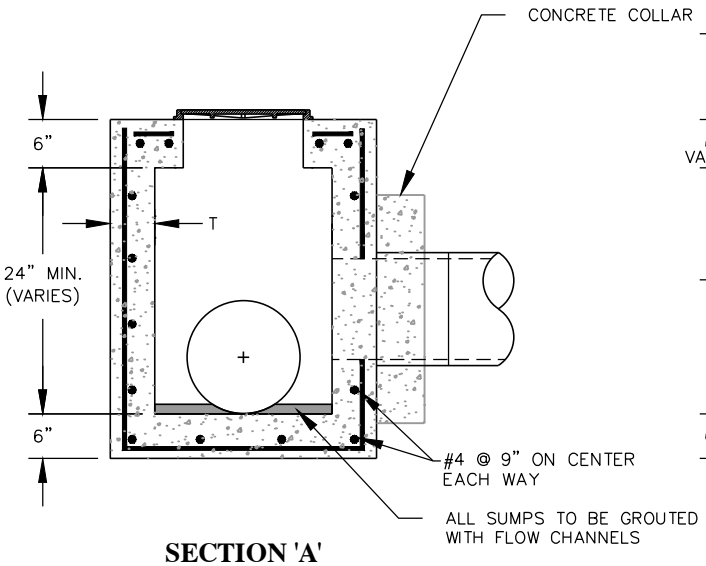

SECTION 'A'

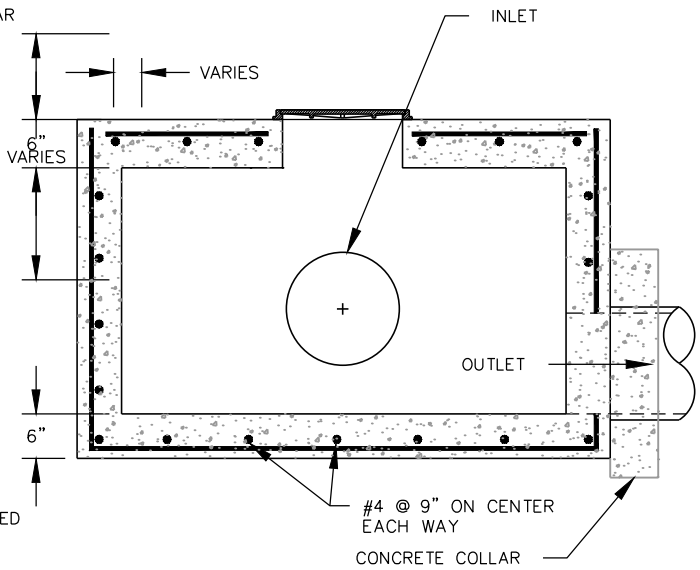

SECTION 'B'

CLEANOUT BOX

DATE:	APRIL 2014
DRAWING NAME:	SD-3
DRAWN BY:	ETL
CHECKED:	APPROVED:

REVISIONS

REV	DATE	BY	COMMENTS

SARATOGA SPRINGS CITY

1307 N. COMMERCE DR.
#200, SARATOGA SPRINGS,
UT 84045
PHONE: 801-766-9793
FAX: 8017669794

STANDARD DETAILS

STORM DRAIN

SD-3

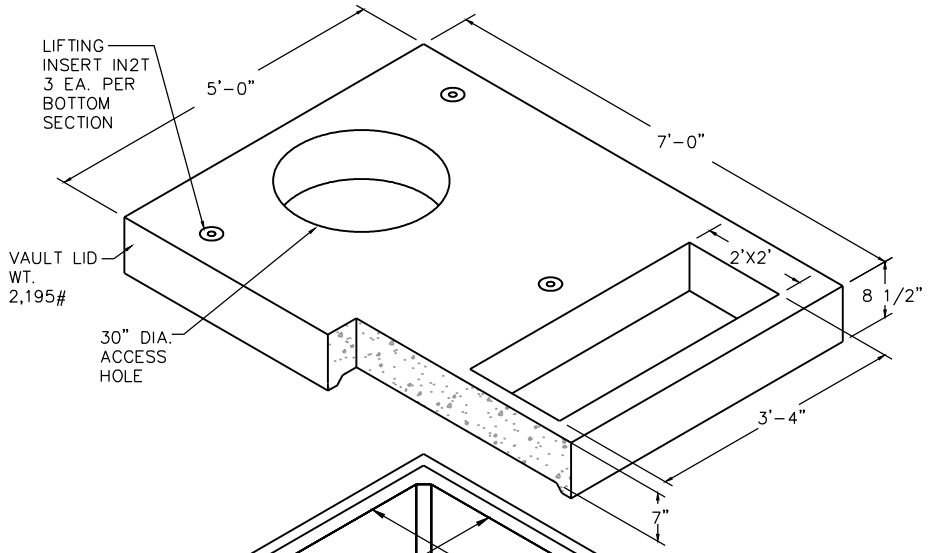

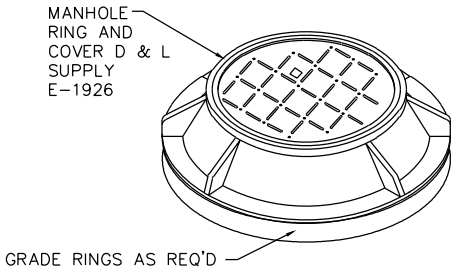

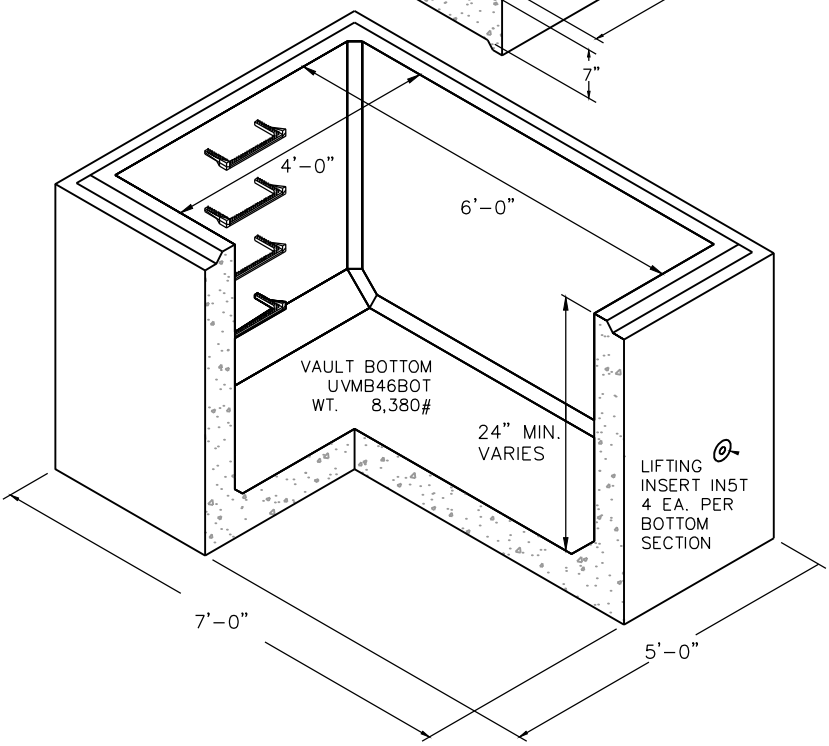

NOTES:

1. VAULTS ARE DESIGNED TO MEET ASTM C858 WITH AASHTO H-20 LOADING.
2. OPENINGS MAY BE SIZED AND LOCATED AS REQUIRED.
3. OPTIONAL HARDWARE MAY BE CAST IN AS REQUIRED.
4. CHECK HARDWARE SECTION FOR OPTIONAL HARDWARE.
5. POUR CONCRETE COLLARS AROUND CIRCUMFERENCE OF PIPE ON EXTERIOR OF BOX.
6. USE NON-SHRINK GROUT AROUND CIRCUMFERENCE OF PIPE ON INTERIOR OF BOX
7. BICYCLE SAFE GRATES ONLY. PROVIDE TYPE 13 "A" GRATE, D&L I-3516, OR TYPE 16 "L" GRATE, D&L I-3517.

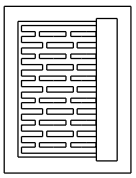

TYPE 16 "L" VALLEY FRAME AND GRATE 680 lbs.

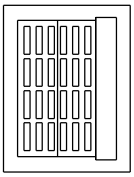

TYPE 13 "A" CURB-COMBO FRAME AND GRATE 600 lbs.

GRATES

COMBINATION GUTTER INLET & CLEANOUT BOX

DATE:	APRIL 2014
DRAWING NAME:	SD-4
DRAWN BY:	ETL
CHECKED:	APPROVED:

REVISIONS

REV	DATE	BY	COMMENTS

SARATOGA SPRINGS CITY

1307 N. COMMERCE DR.
#200, SARATOGA SPRINGS, UT 84045
PHONE: 801-766-9793
FAX: 8017669794

STANDARD DETAILS

STORM DRAIN

SD-4

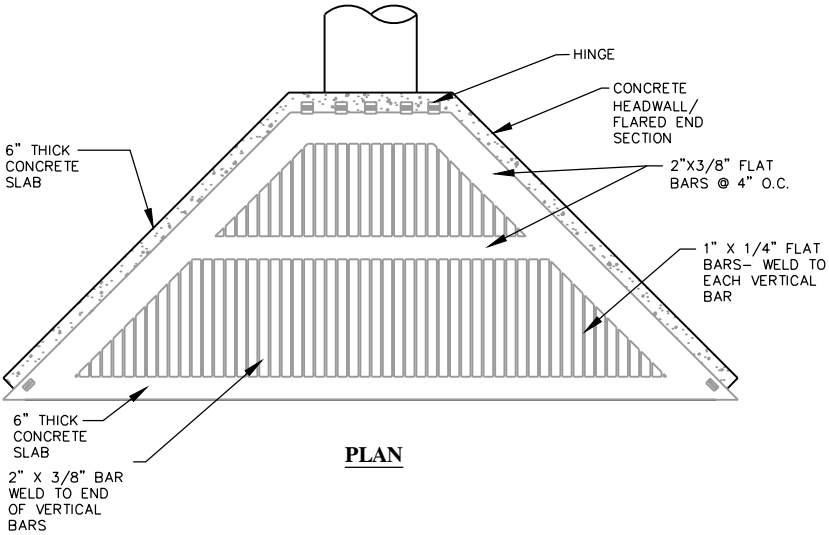

PLAN

NOTES:

1. INSTALL AT INLETS AND OUTLETS OF ALL STORM DRAIN PIPE 15" OR GREATER.

2. CONTRACTOR SHALL PROVIDE SHOP DRAWINGS PRIOR TO FABRICATION.

3. FABRICATION SHALL BE ALL STEEL, FLAT, HOT DIP GALVANIZED AFTER FABRICATION.

4. FLARED END SECTIONS SHALL BE CONCRETE UNLESS OTHERWISE APPROVED BY CITY ENGINEER.

5. REINFORCE ALL CONCRETE WITH #4 BARS AT 9" O..C. EACH WAY MINIMUM.

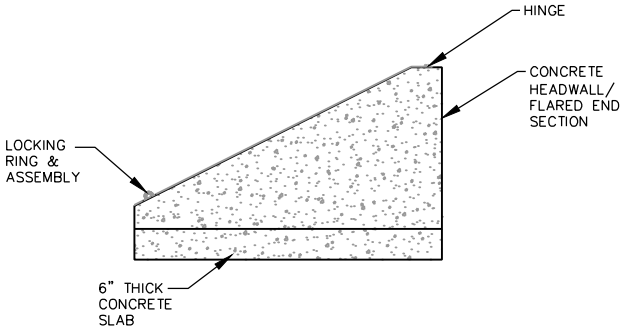

SIDE VIEW

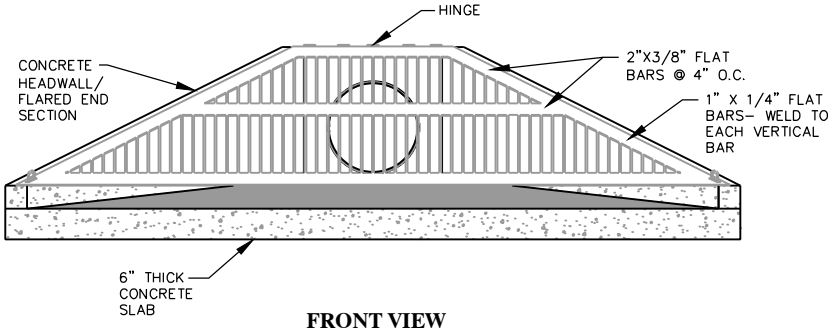

FRONT VIEW

INLET/OUTLET TRASH GRATES

DATE:	APRIL 2014
DRAWING NAME:	SD-5
DRAWN BY:	ETL
CHECKED:	ETL
APPROVED:	

REVISIONS

REV	DATE	BY	COMMENTS

SARATOGA SPRINGS CITY

1307 N. COMMERCE DR.
#200, SARATOGA SPRINGS,
UT 84045
PHONE: 801-766-9793
FAX: 8017669794

STANDARD DETAILS

STORM DRAIN

SD-5

STANDARD CULINARY WATERLINE DETAILS

INDEX

CW-1 WATERLINE TRENCH
CW-2 CONCRETE THRUST BLOCKS
CW-3 WATERLINE LOOP
CW-4 FIRE HYDRANT CONNECTION
CW-5 RESIDENTIAL METER CONNECTION- 3/4 X 5/8 INCH OR 1"
CW-6 METER VAULT 2-INCH
CW-7 METER VAULT 4-INCH
CW-8 METER VAULT 6-INCH
CW-9 METER VAULT 8-INCH
CW-10A PRESSURE REDUCING VALVE (PRV) STATION - 1 OF 2
CW-10B PRESSURE REDUCING VALVE (PRV) STATION - 2 OF 2
CW-11 DETECTOR CHECK VALVE
CW-12 AIR/VACUUM RELIEF VALVE
CW-13 2" BLOW OFF VALVE
CW-14 SAMPLING STATION
CW-15 CONCRETE COLLAR

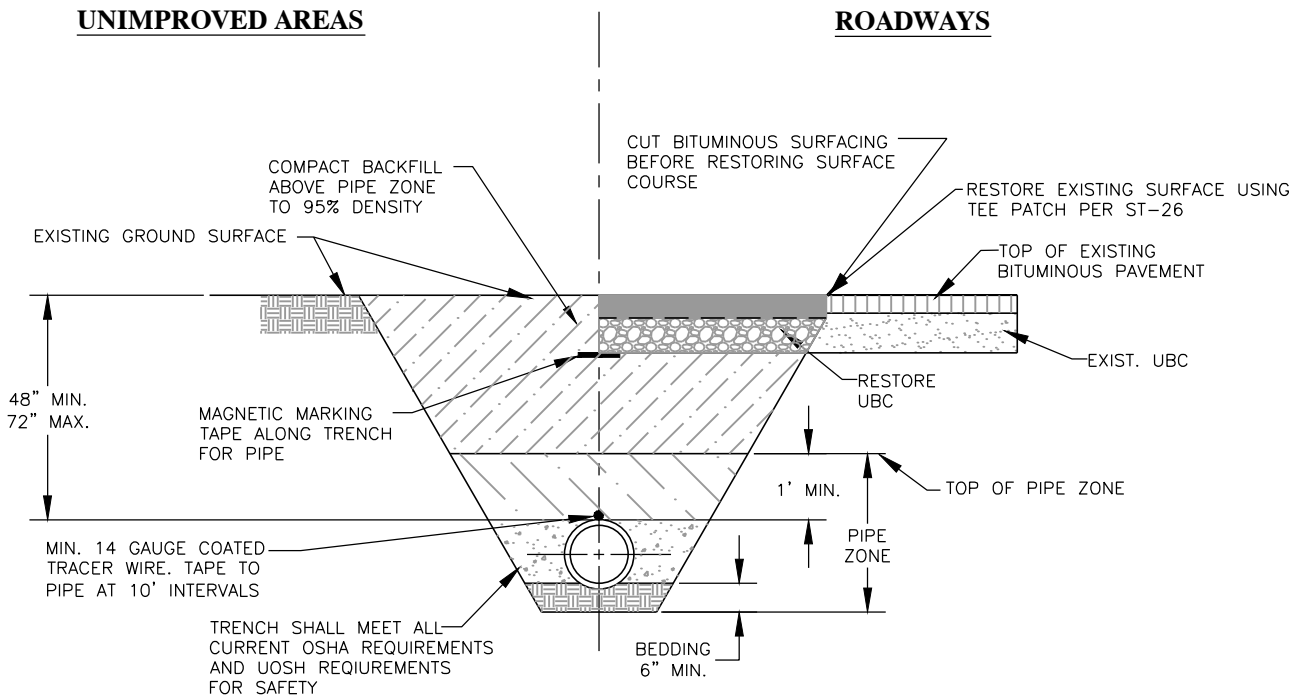

CROSS-SECTION: TYPICAL TRENCH

NOTES:

1. WATER LINES 12 INCHES AND LARGER SHALL BE DUCTILE IRON CLASS-51.

2. WATER LINES 10 INCHES AND SMALLER SHALL BE PVC AWWA C900 CLASS 200.

3. VALVES 12 INCHES AND LARGER SHALL BE BUTTERFLY VALVES.

4. WHENEVER POSSIBLE "HOT TAP" CONNECTIONS REQUIRED. HOT TAP VALVE TO BE SUPPORTED DURING CONNECTION. CONTRACTOR TO NOTIFY CITY 24 HOURS IN ADVANCE OF MAKING CONNECTION.

5. PIPE ZONE SHALL BE BACKFILLED WITH BEDDING MATERIAL, OR OTHER ACCEPTABLE MATERIAL.

6. TRACING WIRE TO BE BROUGHT OUTSIDE OF BOTTOM PORTION OF VALVE BOX AND INSIDE TOP TO SURFACE.

7. FURNISH AND INSTALL POLY-WRAP ON DUCTILE IRON PIPE.

8. WHERE COLLAPSIBLE SOILS ARE ENCOUNTERED, FURNISH, PLACE AND COMPACT IMPORTED BACKFILL MATERIALS AS REQUIRED AND AS DIRECTED.

CONSTRUCTION NOTES:

1. THE CONTRACTOR SHALL BE RESPONSIBLE FOR MEETING ALL OF THE REQUIREMENTS ESTABLISHED FOR SAFE TRENCHING. (SEE OSHA AND UOSH REQUIREMENTS, LATEST EDITIONS).

2. MINIMUM COVER OVER TOP OF PIPE SHALL BE 48-INCHES BELOW THE FINISHED GRADE. THIS DEPTH MAY BE INCREASED AS REQUIRED TO MISS UNDERGROUND UTILITIES, STORM DRAINS, OR OTHER OBSTRUCTIONS, OR WHERE INDICATED ON THE DRAWINGS.

3. CONTRACTOR SHALL LOCATE ALL UNDERGROUND UTILITIES BEFORE LAYING PIPE WITHIN 200 FEET OF UTILITY CROSSINGS SHOWN ON THE DRAWINGS, OR AS "BLUE-STAKED."

4. SEWER MAINS, WATER MAINS, GAS MAINS AND OTHER UTILITIES ARE SHOWN ON THE PLANS IN A GENERAL SCHEMATIC WAY ACCORDING TO INFORMATION RECEIVED FROM OTHERS AND SOMETIMES FROM FIELD MEASUREMENTS. THE ACCURACY OR COMPLETENESS OF THE LOCATIONS SHOWN IS NOT GUARANTEED. THE CONTRACTOR SHALL DETERMINE THE ACTUAL LOCATION OF EXISTING SERVICE CONNECTIONS AND UTILITIES AND TAKE THE NECESSARY STEPS TO AVOID THEM.

5. ANY DAMAGE TO EXISTING UTILITIES SHALL BE REPAIRED AT THE CONTRACTOR'S SOLE EXPENSE.

6. THE CONTRACTOR MAY, AT HIS DISCRETION, USE SLOPING WALLS IN UNIMPROVED TERRAIN.

CULINARY WATERLINE TRENCH

DATE:	APRIL 2014
DRAWING NAME:	CW-1
DRAWN BY:	ETL
CHECKED:	APPROVED:

REVISIONS

REV	DATE	BY	COMMENTS

SARATOGA SPRINGS CITY

1307 N. COMMERCE DR.
#200, SARATOGA SPRINGS, UT 84045
PHONE: 801-766-9793
FAX: 8017669794

STANDARD DETAILS

CULINARY WATER

CW-1

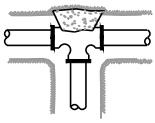

TEE

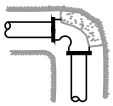

90° ELBOW

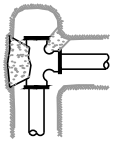

TEE WITH CAP

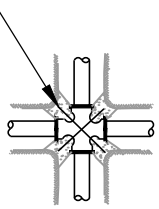

CROSS

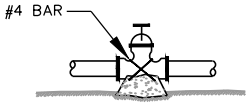

VALVE

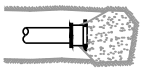

CAP OR PLUG

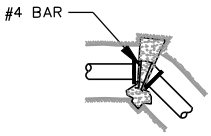

ELBOW

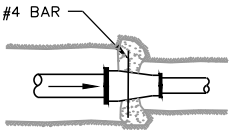

REDUCER

SAFE BEARING LOADS

SOIL TYPE	SAFE BEARING LOAD (lb/ft²)
SAND	1000
SAND & GRAVEL	1500
SAND & GRAVEL CEMENTED WITH CLAY	2000
SHALE	5000

SAFE BEARING LOAD FORMULA

THRUST BLOCK AREA AGAINST TRENCH WALL (SQUARE FEET) = THRUST ON FITTING / SAFE BEARING LOAD OF SOIL

NOTES:

1. REINFORCING BARS SHALL BE EPOXY COATED

2. RESIDENT PROJECT ENGINEER WILL CALCULATE QUANTITIES OF CONCRETE REQ'D AND SPECIFY PLACEMENT METHODS & REQUIREMENTS; WHICH SHALL BE APPROVED BY CITY ENGINEER

3. CONCRETE SHALL BE 4000 PSI MIN.

4. POUR CONCRETE AGAINST UNDISTURBED SOIL

THRUST ON FITTINGS

POUNDS @ 1 POUND PER SQUARE INCH OF WATER PRESSURE*

PIPE SIZE	TEES/ PLUGS	90° BENDS	45° BENDS	22.5° BENDS
4"	18.5	26.1	14.2	7.2
6"	38	53.7	29.1	14.7
8"	65.8	93	50.4	25.5
10"	107.5	152	82.4	41.7
12"	153.1	216.4	117.2	59.4
14"	215.5	304.7	164.9	84
16"	281.5	398.1	215.4	109.8
18"	356.3	503.8	272.6	139
20"	439.8	622	336.6	171.6
24"	633.3	895.6	484.7	247.1

*MULTIPLY THRUST BY MAXIMUM WATER PRESSURE

*PIPE SIZES LARGER THAN 24" SHALL BE THRUST BLOCKED AS PER ENGINEER RECOMMENDATION

THRUST BLOCK AREA AGAINST TRENCH WALL (SQUARE FEET)

ASSUMING SAND AND MAX PRESSURE OF 150 PSI
SIZE MAY BE REDUCED WITH AN ENGINEERED SUBMITTAL AND AS APPROVED BY THE CITY ENGINEER

PIPE SIZE	TEES/ PLUGS	90° BENDS	45° BENDS	22.5° BENDS
4"	2.8	3.9	2.1	1.1
6"	5.7	8.1	4.4	2.2
8"	9.9	14.0	7.6	3.8
10"	16.1	22.8	12.4	6.3
12"	23.0	32.5	17.6	8.9
14"	32.3	45.7	24.7	12.6
16"	42.2	59.7	32.3	16.5
18"	53.4	75.6	40.9	20.9
20"	66.0	93.3	50.5	25.7
24"	95.0	134.3	72.7	37.1

CONCRETE THRUST BLOCKS

DATE: APRIL 2014

DRAWING NAME: CW-2

DRAWN BY: ETL

CHECKED: APPROVED:

REVISIONS

REV	DATE	BY	COMMENTS

SARATOGA SPRINGS CITY

1307 N. COMMERCE DR.
#200, SARATOGA SPRINGS, UT 84045
PHONE: 801-766-9793
FAX: 8017669794

STANDARD DETAILS

CULINARY WATER

CW-2

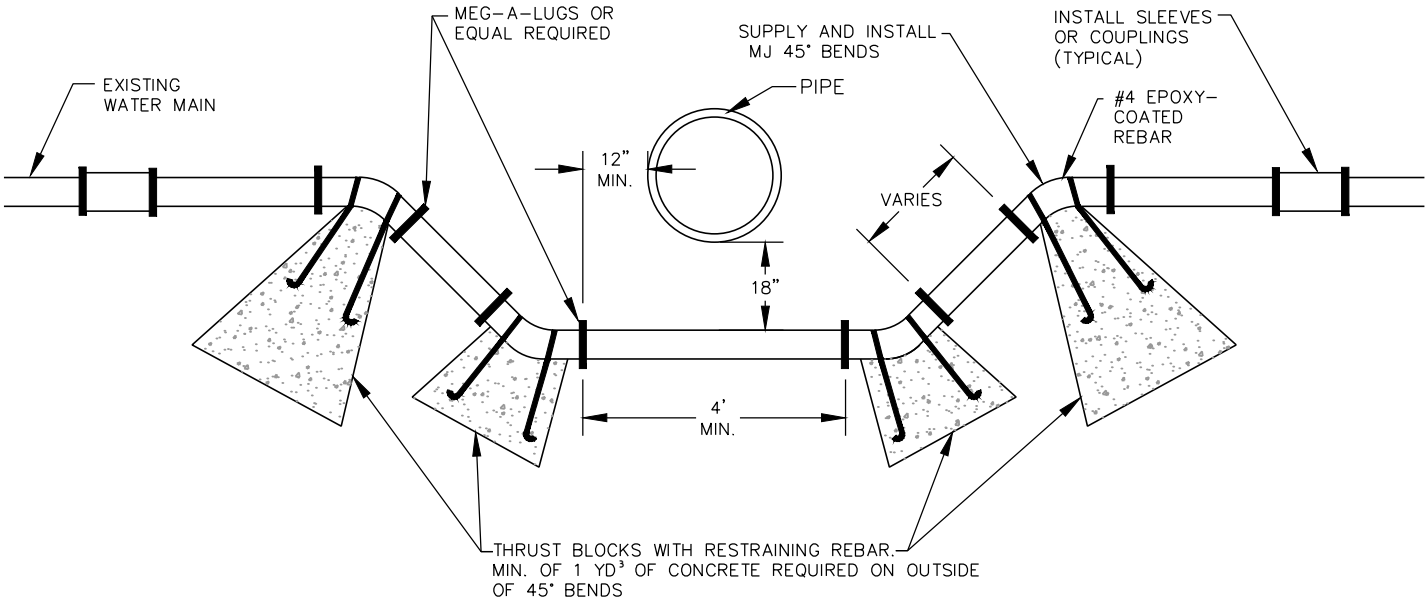

NOTES:

1. CITY TO BE GIVEN 72 HOUR NOTICE BEFORE LOOPING ANY WATERLINE WHEN SHUT OFF IS REQUIRED
2. A CASE OR SLEEVE IS REQUIRED WHEN CROSSING CULINARY WATER UNDER SANITARY AND STORM SEWER.
3. ENGINEER SHALL DETERMINE # AND LOCATION OF RESTRAINTS.

CULINARY WATERLINE LOOP

DATE: **APRIL 2014**

DRAWING NAME: **CW-3**

DRAWN BY: **ETL**

CHECKED: APPROVED:

REVISIONS

REV	DATE	BY	COMMENTS

SARATOGA SPRINGS CITY

1307 N. COMMERCE DR.
#200, SARATOGA SPRINGS,
UT 84045
PHONE: 801-766-9793
FAX: 8017669794

STANDARD DETAILS

CULINARY WATER

CW-3

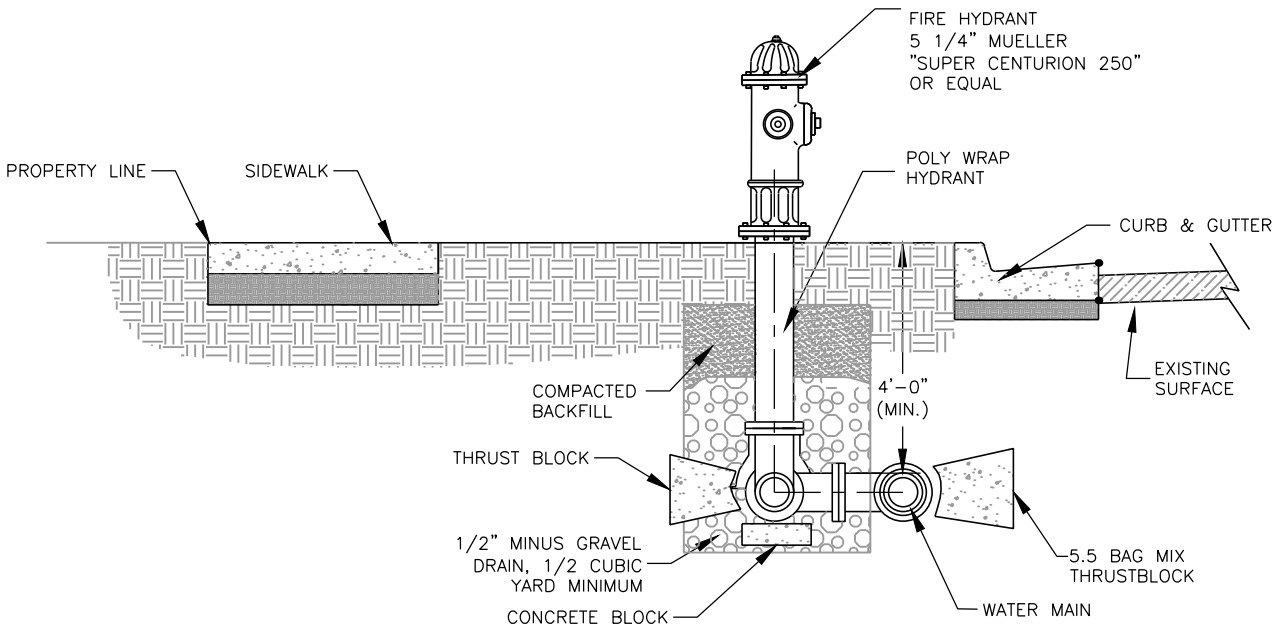

SECTION VIEW

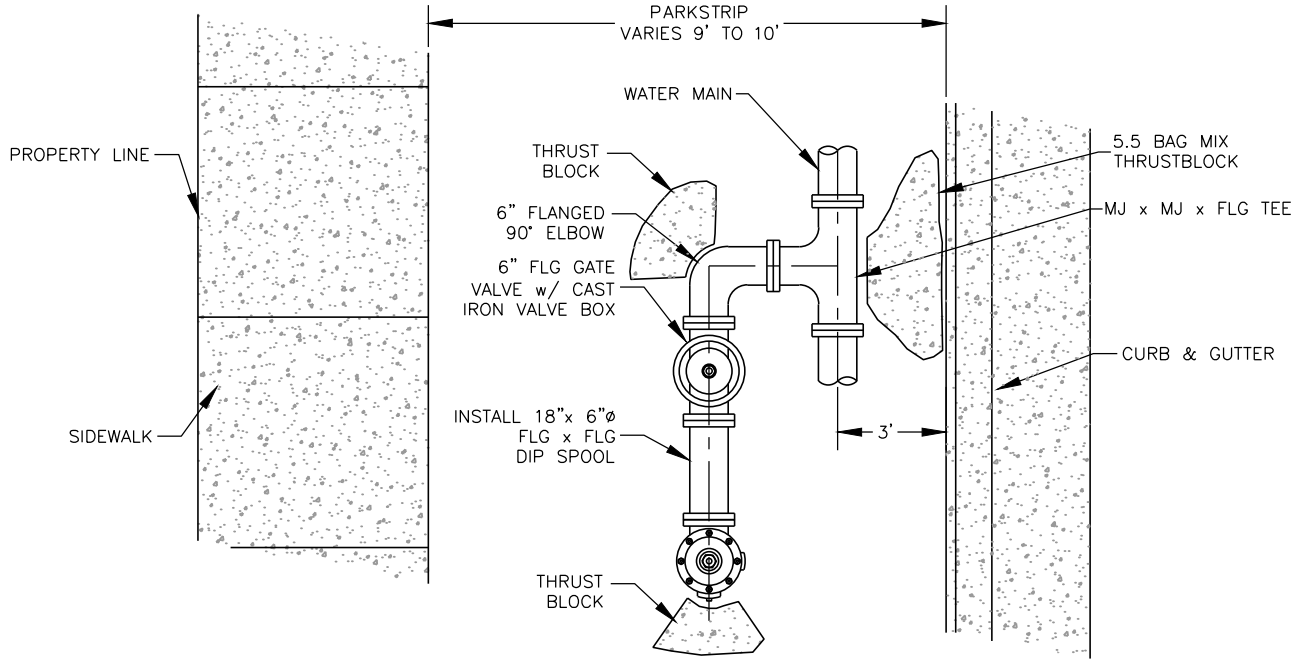

PLAN VIEW

NOTES:

1. HYDRANT SHALL BE "TRAFFIC" TYPE WITH A REPLACEABLE BREAK-AWAY UNIT IMMEDIATELY ABOVE GROUND.
2. HYDRANT SHALL BE CENTERED IN A CONCRETE PAD.

FIRE HYDRANT CONNECTION

DATE:	APRIL 2014
DRAWING NAME:	CW-4
DRAWN BY:	ETL
CHECKED:	APPROVED:

REVISIONS

REV	DATE	BY	COMMENTS

SARATOGA SPRINGS CITY

1307 N. COMMERCE DR.
#200, SARATOGA SPRINGS,
UT 84045
PHONE: 801-766-9793
FAX: 8017669794

STANDARD DETAILS

CUILINARY WATER

CW-4

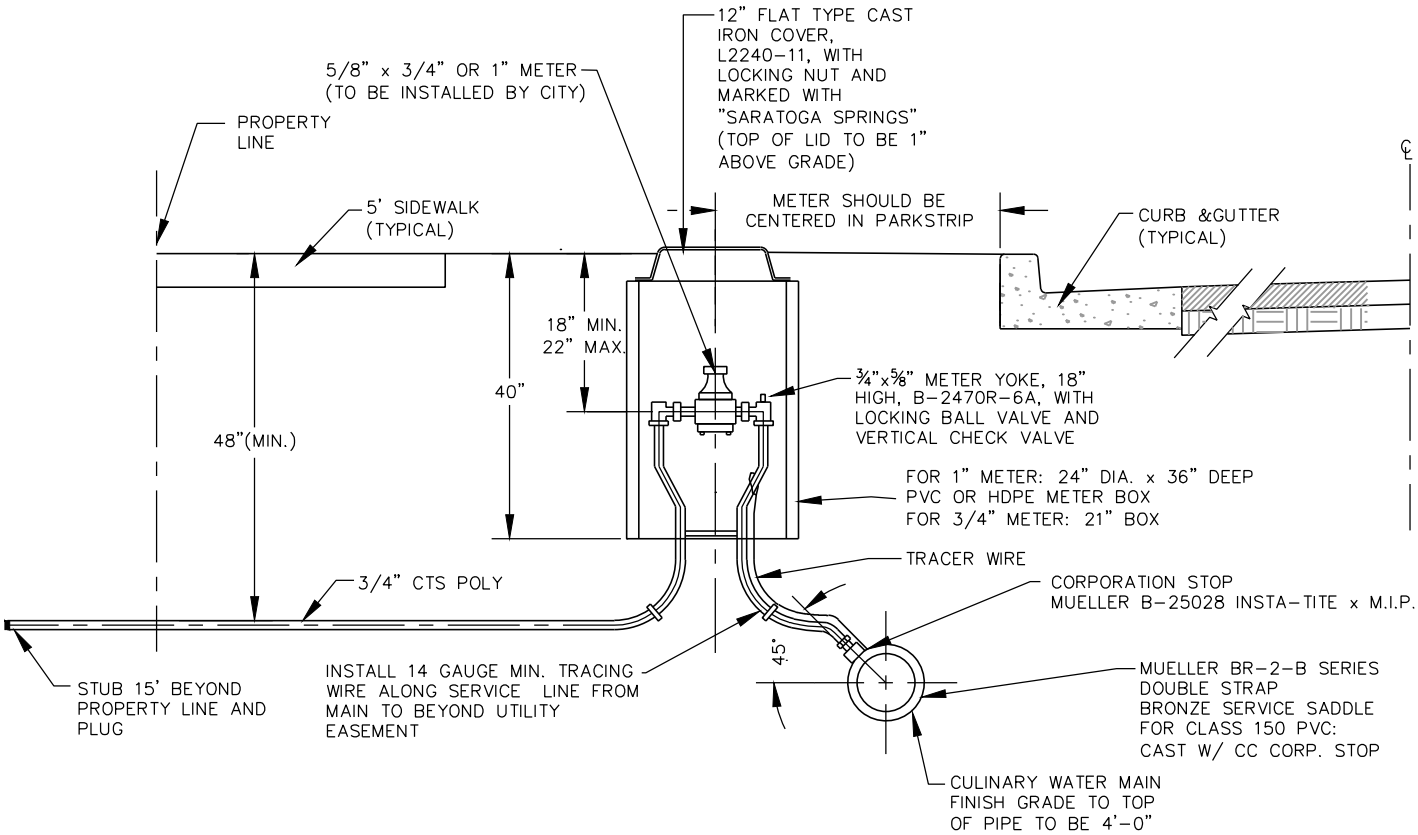

NOTES:

1. INSPECTION: METER BOX AND SERVICE LINE SHALL BE INSPECTED BY CITY PRIOR TO BACKFILLING.
2. BACKFILL: INSTALL BACKFILL IN LIFTS NOT EXCEEDING 8" AFTER COMPACTION. COMPACT EACH LIFT TO AN AVERAGE DRY DENSITY OF 95% WITH NO DENSITY TEST RESULT LESS THAN 92%.
3. CONTRACTOR TO SUPPLY ALL MATERIALS EXCLUDING METER
4. METER BOXES SHOULD BE PVC OR HDPE.
5. PIPE: INSTALL MINIMUM 3/4" CTS POLY PIPE (SDR-9) FROM MAIN TO METER AND FROM METER TO BUILDING. MINIMUM 1" POLYETHYLENE PIPE TO BE USED IN COMMERCIAL AREAS. INSTALL TRACING WIRE FROM MAIN LINE TO METER.
6. PLACEMENT: ALL METERS ARE TO BE INSTALLED IN THE PARK STRIP, MUST BE PLACED NEAR MIDPOINT OF THE LOT, AND MUST NOT BE LOCATED IN A DRIVEWAY OR IN A SIDEWALK.
7. METER YOKE TO BE MUELLER B-2470R-6A, OR ACCEPTABLE EQUAL
9. SERVICE SADDLES SHALL BE MUELLER BR-2-B SERIES, OR EQUAL
11. METER LID TO BE 1" ABOVE LINE GRADE OF WALK/CURB
12. STAINLESS STEEL LINER INSERTS WILL BE REQUIRED INSIDE OF TUBING AT COMPRESSION FITTINGS.
13. WATER SERVICES SHALL BE STUBBED TO A POINT APPROXIMATELY 1' BEYOND UTILITY EASEMENT (PUE).
14. 1" METER INSTALLATION TO BE SIMILAR USING 1" METER, PIPE, AND FITTINGS.

RESIDENTIAL METER CONNECTION 3/4" x 5/8" OR 1"

DATE:	APRIL 2014
DRAWING NAME:	CW-5
DRAWN BY:	ETL
CHECKED:	APPROVED:

REVISIONS

REV	DATE	BY	COMMENTS

SARATOGA SPRINGS CITY

1307 N. COMMERCE DR.
#200, SARATOGA SPRINGS, UT 84045
PHONE: 801-766-9793
FAX: 8017669794

STANDARD DETAILS

CULINARY WATER

CW-5

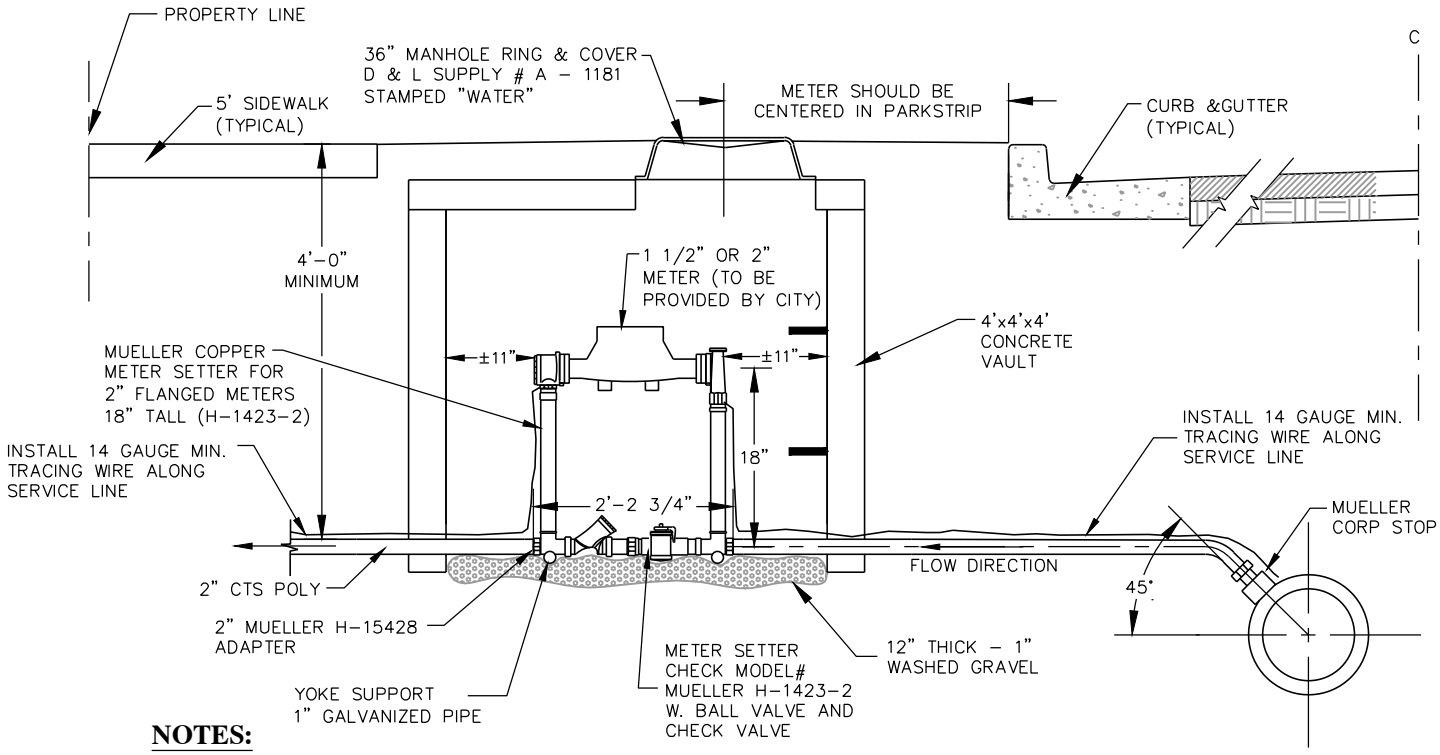

NOTES:

1. INSPECTION: METER BOX AND SERVICE LINE SHALL BE INSPECTED BY CITY PRIOR TO BACKFILLING.
2. BACKFILL: INSTALL BACKFILL IN LIFTS NOT EXCEEDING 8" AFTER COMPACTION. COMPACT EACH LIFT TO AN AVERAGE DRY DENSITY OF 97% WITH NO DENSITY TEST RESULT LESS THAN 95%.
3. CONTRACTOR TO SUPPLY ALL MATERIALS EXCLUDING METER.
4. METER BOXES SHALL BE A 4'x4'x4' CONCRETE VAULT.
5. PIPE: INSTALL MINIMUM 2" CTS POLY PIPE FROM MAIN TO METER AND FROM METER TO BUILDING. INSTALL TRACING WIRE FROM MAIN LINE TO METER
6. PLACEMENT: ALL METERS ARE TO BE INSTALLED IN THE PARK STRIP, MUST BE PLACED NEAR THE MIDPOINT OF THE LOT, AND MUST NOT BE LOCATED IN A DRIVEWAY OR IN A SIDEWALK.
7. METER SETTER TO BE MUELLER H–1423–2, OR ACCEPTABLE EQUAL. INSTALL CORRECT SIZE METAL PIPE TO STABILIZE SETTER.
8. PIPE SPLICES SHALL BE MADE USING A COMPRESSION FITTING; MUELLER 110 COMPRESSION CONNECTION (MUELLER H–15403) W/ STAINLESS STEEL INSERTS
9. WATER SERVICES SHALL BE STUBBED TO A POINT APPROXIMATELY 1 (ONE) FOOT BEYOND UTILITY EASEMENT.
10. IN TRAFFIC AREAS, BOXES SHOULD BE ABLE TO SUPPORT H–20 LOADING.
(NOTE: TYPICALLY WATER METERS ARE NOT ALLOWED IN TRAFFIC AREAS.)
11. METER LID TO BE 1" ABOVE THE LINE GRADE OF WALK/CURB.
12. 1 1/2–INCH METER INSTALLATION TO BE SIMILAR; USING 1 1/2–INCH METER, PIPE, FITTINGS AND SETTER.

NON-RESIDENTIAL METER CONNECTION 2 " OR 1 1/2"

DATE: APRIL 2014

DRAWING NAME: CW-6

DRAWN BY: ETL

CHECKED: APPROVED:

REVISIONS

REV	DATE	BY	COMMENTS
1	10/17/2013	EL	CONCRETE BOX WITH CORP STOP

SARATOGA SPRINGS CITY

1307 N. COMMERCE DR.
#200, SARATOGA SPRINGS,
UT 84045
PHONE: 801-766-9793
FAX: 8017669794

STANDARD DETAILS

CULINARY WATER

CW-6

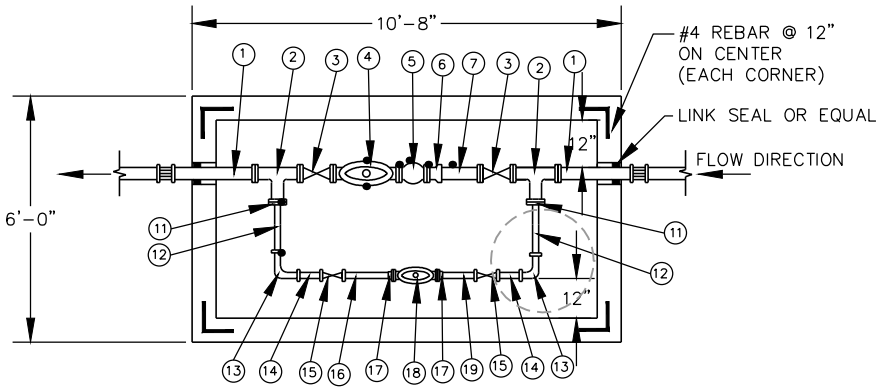

PLAN VIEW

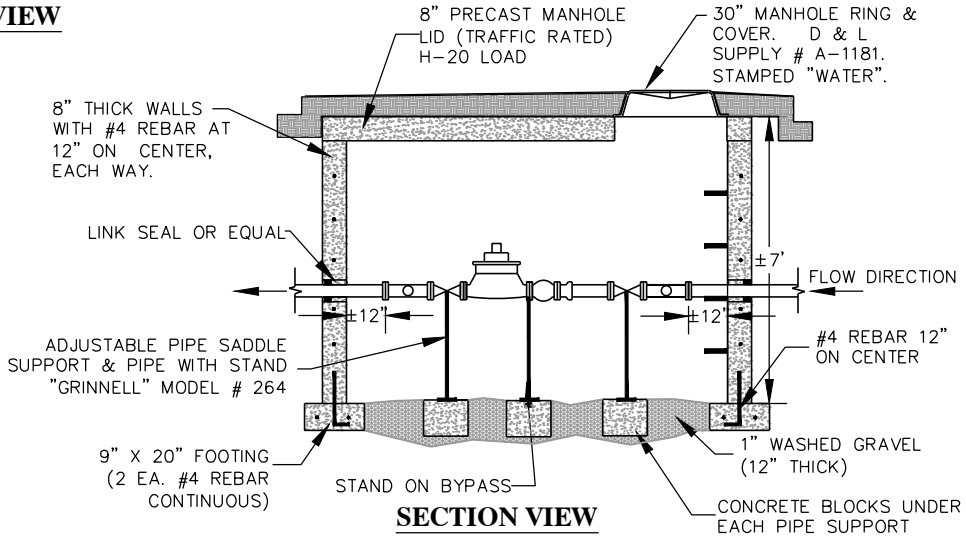

SECTION VIEW

NOTES:

1. INSPECTION: METER BOX AND SERVICE LINE SHALL BE INSPECTED BY CITY PRIOR TO BACKFILLING.

2. BACKFILL: INSTALL BACKFILL IN LIFTS NOT EXCEEDING 8" AFTER COMPACTION. COMPACT EACH LIFT TO AN AVERAGE DRY DENSITY OF 97% WITH NO DENSITY TEST RESULT LESS THAN 92%.

3. ALL 4" INTERIOR FITTINGS TO BE FLANGED AND ALL 2" INTERIOR FITTINGS TO BE BRASS, SCHEDULE 40 (THREADED).

4. WATER METERS SHALL BE PROVIDED BY CITY.

5. PLACEMENT: ALL METERS ARE TO BE INSTALLED IN THE PARK STRIP AND MUST BE PLACED NEAR MIDPOINT OF THE LOT AND MUST NOT BE LOCATED IN A DRIVEWAY, OR IN A SIDEWALK.

6. CONTRACTOR SHALL SUPPLY ALL MATERIALS AND LABOR, EXCLUDING THE WATER METER.

4" PIPE SCHEDULE

#	QTY	DESCRIPTION
1	1	FLxPE D.I. SPOOL LENGTH = ±48"
2	1	4"x4"x4" FLGD. TEE
3	1	4" FLxFL GATE VALVE (MUELLER)**
4	1	4" FLxFL METER*
5	1	FLANGED METER STRAINER
6	1	4" FLANGED COUPLING ADAPTER
7	1	FLxPE D.I. SPOOL (LENGTH AS NEEDED)

2" PIPE SCHEDULE

#	QTY	DESCRIPTION
11	2	4" BLIND FLANGE W\2" TAP
12	2	±23" NIPPLE
13	2	2" 90° ELBOW
14	2	2"x6" NIPPLE
15	2	2" GATE VALVE (MUELLER) #2380-8**
16	1	2"x ±21.5" NIPPLE
17	2	2" SCREW-ON FLANGE
18	1	2" METER*
19	1	2" NIPPLE, LENGTH AS NEEDED

*SUPPLIED BY CITY
** GATE VALVE SHALL BE FURNISHED WITH A HANDWHEEL.

4 INCH METER AND VAULT WITH 2" BYPASS FOR 4" LATERAL

DATE: APRIL 2014
DRAWING NAME: CW-7
DRAWN BY: ETL
CHECKED: APPROVED:

REVISIONS

REV	DATE	BY	COMMENTS

SARATOGA SPRINGS CITY

1307 N. COMMERCE DR.
#200, SARATOGA SPRINGS, UT 84045
PHONE: 801-766-9793
FAX: 8017669794

STANDARD DETAILS

CULINARY WATER

CW-7

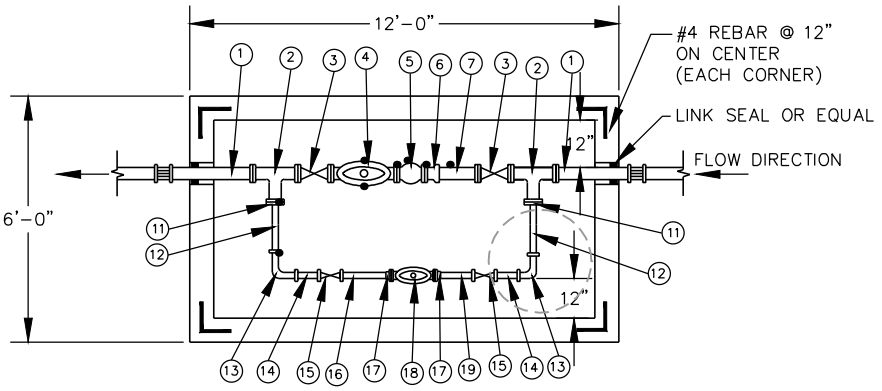

PLAN VIEW

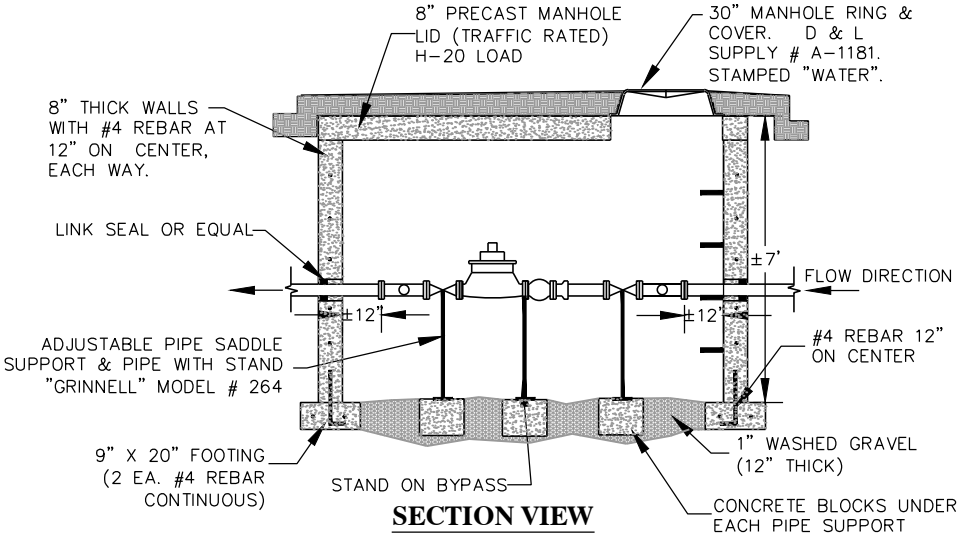

SECTION VIEW

NOTES:

1. INSPECTION: METER BOX AND SERVICE LINE SHALL BE INSPECTED BY CITY PRIOR TO BACKFILLING.
2. BACKFILL: INSTALL BACKFILL IN LIFTS NOT EXCEEDING 8" AFTER COMPACTION. COMPACT EACH LIFT TO AN AVERAGE DRY DENSITY OF 97% WITH NO DENSITY TEST RESULT LESS THAN 92%.
3. ALL 4" INTERIOR FITTINGS TO BE FLANGED AND ALL 2" INTERIOR FITTINGS TO BE BRASS, SCHEDULE 40 (THREADED).
4. PLACEMENT: ALL METERS ARE TO BE INSTALLED IN THE PARK STRIP, MUST BE PLACED NEAR MIDPOINT OF THE LOT AND MUST NOT BE LOCATED IN A DRIVEWAY OR IN A SIDEWALK.
6. CONTRACTOR SHALL SUPPLY ALL MATERIALS AND LABOR EXCLUDING METER

6" PIPE SCHEDULE

#	QTY	DESCRIPTION
1	1	FLxPE D.I. SPOOL LENGTH = ±48"
2	1	6"x6"x2" FLGD. TEE
3	1	6" FLxFL GATE VALVE (MUELLER)*
4	1	6" FLxFL METER**
5	1	FLANGED METER STRAINER
6	1	6" FLANGED COUPLING ADAPTER
7	1	FLXPE DI SPOOL, LENGTH AS NEEDED

2" PIPE SCHEDULE

#	QTY	DESCRIPTION
11	2	4" BLIND FLANGE W\2" TAP
12	2	±23" NIPPLE
13	2	2" 90° ELBOW
14	2	2"x6" NIPPLE
15	2	2" GATE VALVE (MUELLER) #2380-8*
16	1	2"x ±21.5" NIPPLE
17	2	2" SCREW-ON FLANGE
18	1	METER**
19	1	2" NIPPLE (LENGTH AS NEEDED)

* GATE VALVE SHALL BE FURNISHED WITH A HANDWHEEL.
** SUPPLIED BY CITY

6 INCH METER AND VAULT WITH 2" BYPASS FOR 6" LATERALS

DATE: APRIL 2014
DRAWING NAME: CW-8
DRAWN BY: ETL
CHECKED: APPROVED:

REVISIONS

REV	DATE	BY	COMMENTS

SARATOGA SPRINGS CITY

1307 N. COMMERCE DR.
#200, SARATOGA SPRINGS,
UT 84045
PHONE: 801-766-9793
FAX: 8017669794

STANDARD DETAILS

CULINARY WATER

CW-8

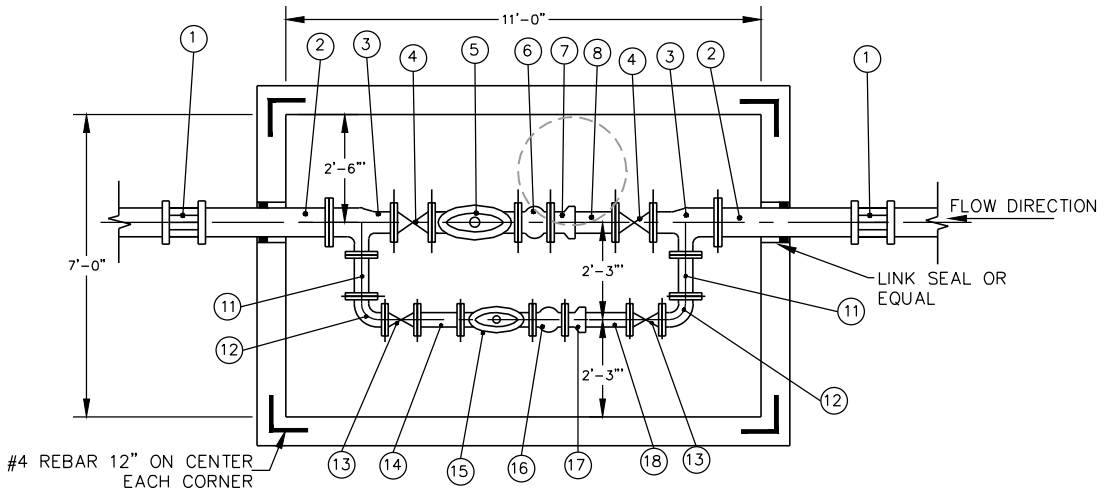

PLAN VIEW

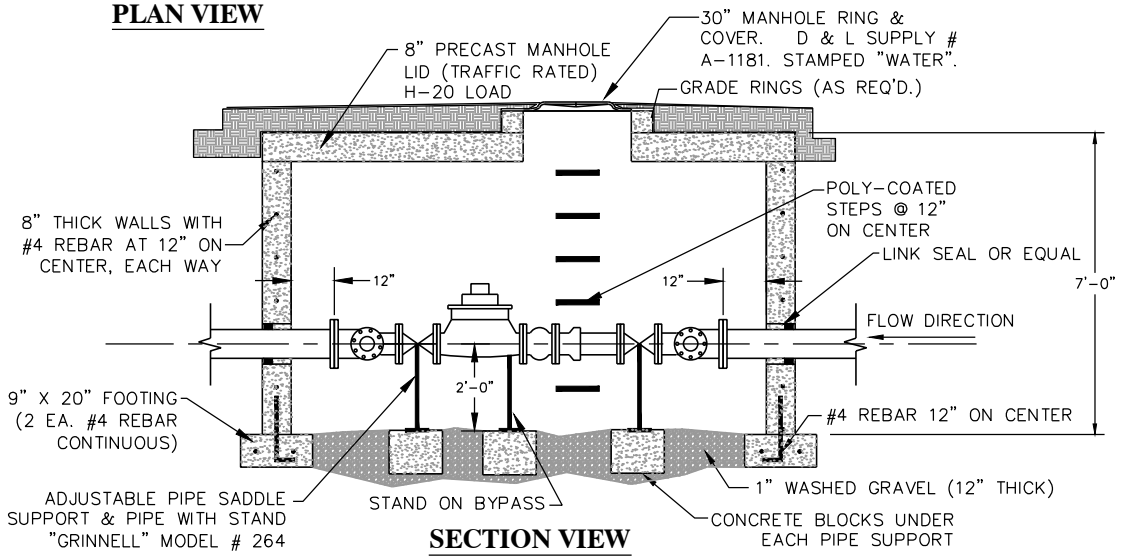

SECTION VIEW

8" & 6" PIPE SCHEDULE		
#	QTY	DESCRIPTION
1	2	8" MECHANICAL COUPLINGS
2	2	8" FLxPE D.I. SPOOL (LENGTH AS NEEDED)
3	2	8"x6"x4" FLxFLxFL TEE
4	2	6" FLxFL GATE VALVE (MUELLER)*
5	1	6" FLxFL METER**
6	1	6" FLANGED METER STRAINER
7	1	6" FLANGED COUPLING ADAPTER
8	1	6" FLxPE D.I. SPOOL (LENGTH AS NEEDED)

4" PIPE SCHEDULE		
#	QTY	DESCRIPTION
11	2	4" FLxFL D.I. SPOOL (LG = ±11.5")
12	2	4" FLxFL 90° BEND
13	2	4" GATE VALVE (MUELLER)*
14	1	4" FLxFL D.I. SPOOL (LG = ±12")
15	1	4" METER**
16	1	4" FLxFL METER STRAINER
17	1	4" FLANGED COUPLING ADAPTER
18	1	4" FLxPE D.I. SPOOL (LENGTH AS NEEDED)

* GATE VALVE SHALL BE FURNISHED WITH A HANDWHEEL.

** SUPPLIED BY CITY

NOTES:

1. INSPECTION: METER BOX AND SERVICE LINE SHALL BE INSPECTED BY CITY PRIOR TO BACKFILLING.
2. BACKFILL: INSTALL BACKFILL IN LIFTS NOT EXCEEDING 8" AFTER COMPACTION. COMPACT EACH LIFT TO AN AVERAGE DRY DENSITY OF 97% WITH NO DENSITY TEST RESULT LESS THAN 92%.
3. ALL INTERIOR FITTINGS TO BE FLANGED, UNLESS OTHERWISE INDICATED.
4. PLACEMENT: ALL METERS ARE TO BE INSTALLED IN THE PARK STRIP, MUST BE PLACED NEAR MIDPOINT OF THE LOT AND MUST NOT BE LOCATED IN A DRIVEWAY OR IN A SIDEWALK.
6. CONTRACTOR SHALL SUPPLY ALL MATERIALS AND LABOR EXCLUDING METER

6 INCH METER AND VAULT WITH 4" BYPASS FOR 8" LATERALS

DATE: APRIL 2014

DRAWING NAME: CW-9

DRAWN BY: ETL

CHECKED: APPROVED:

REVISIONS

REV	DATE	BY	COMMENTS

SARATOGA SPRINGS CITY

1307 N. COMMERCE DR.
#200, SARATOGA SPRINGS, UT 84045
PHONE: 801-766-9793
FAX: 8017669794

STANDARD DETAILS

CULINARY WATER

CW-9

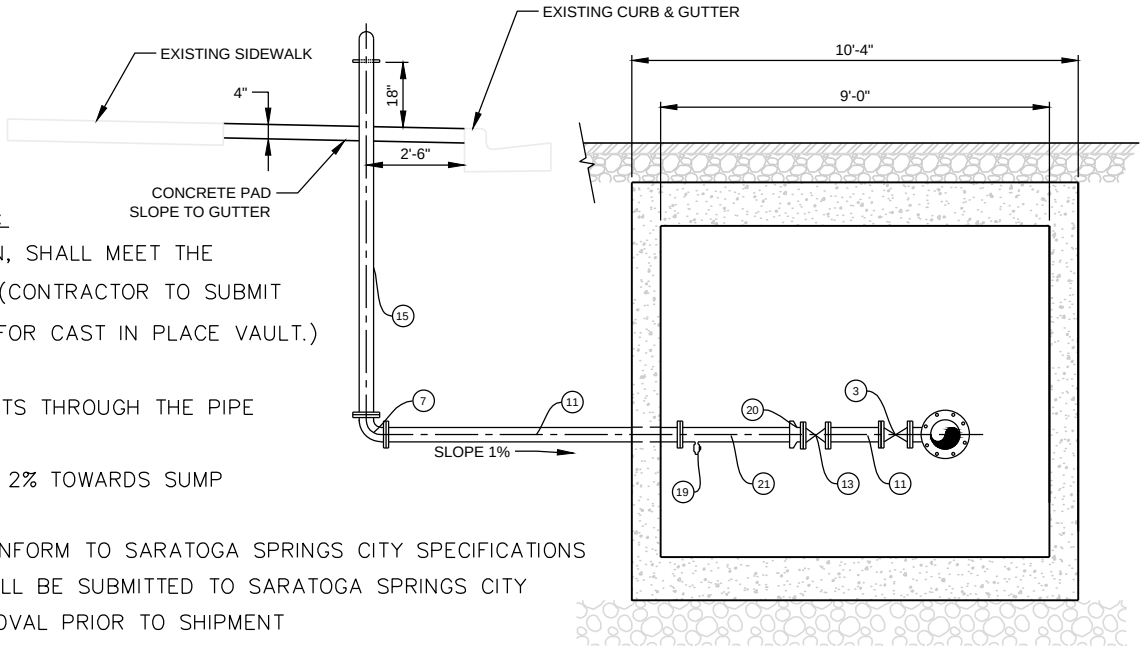

C - SECTION VIEW
SCALE: NTS

CONCRETE VAULT NOTES:

PRECAST BOX AS SHOWN, SHALL MEET THE FOLLOWING CONDITIONS. (CONTRACTOR TO SUBMIT STRUCTURAL DRAWINGS FOR CAST IN PLACE VAULT.)

1. H-20 LOADING
2. NO HORIZONTAL JOINTS THROUGH THE PIPE OPENINGS.
3. FLOOR SHALL SLOPE 2% TOWARDS SUMP

GENERAL NOTES:

1. ALL WORK SHALL CONFORM TO SARATOGA SPRINGS CITY SPECIFICATIONS
2. SHOP DRAWINGS SHALL BE SUBMITTED TO SARATOGA SPRINGS CITY ENGINEER FOR APPROVAL PRIOR TO SHIPMENT
3. THE PRV ASSEMBLY DETAIL SHALL BE VERIFIED PER MANUFACTURE RECOMMENDATIONS
4. ALL VALVES SHALL HAVE 150 LB FLG'S, DUCTILE IRON BODY, BRONZE INTERNAL TRIM, EPOXY COATED, AND STAINLESS STEEL TUBES AND FITTINGS
5. PROVIDE DESIGN SUBMITTAL FOR WATERMAIN SIZES ABOVE 12"
6. PROVIDE BOLLARDS OR OTHER PROTECTION IF AND AS DIRECTED BY CITY INSPECTOR.
7. INSTALL AIR-VACUUM RELEIF VALVES WHERE REQUIRED AND AS DIRECTED.

PIPE SCHEDULE FOR 10" AND 12" WATERMAINS

#	DESCRIPTION
1.	12" X 10" MJ x FL REDUCER (NOT USED ON 10" MAINS)
2.	10" X 6" FL TEE
3.	6" FL GATE VALVE WITH HANDWHEEL
4.	10" FL GATE VALVE WITH HANDWHEEL
5.	6" CLA-VAL PRV
6.	10" CLA-VAL PRV
7.	6" 90 DEGREE FL ELBOW
8.	10" FL STRAINER
9.	4" LIQUID FILLED PRESSURE GAUGE UP TO 250 PSI W/ 3/4" BALL VALVE & HOSE BIB (NON-THREADED)
10.	THRUST RESTRAINT W/ WELDED SEEP RING & THRUST BLOCK
11.	FL SPOOL
12.	POLYPROPYLENE M.H. STEPS @ 12" O.C.
13.	6" CLA-VAL PRESSURE RELIEF VALVE (MODEL 50G-01B, SEE NOTE 4) ON LOW PRESSURE SIDE
14.	PIPE SUPPORT
15.	FL STAND PIPE W/ FL GOOSE NECK POINTING DOWNWARD. THE OPEN END OF GOOSE NECK SHALL BE 18" ABOVE GRADE AND PROVIDED WITH A SCREEN (#14 MESH NON-CORRODIBLE).
16.	6" FL STRAINER
17.	12" X 12" RECESSED SUMP WITH REMOVABLE ALUM. GRATE
18.	MJ COUPLING OR MECHANIC COUPLING
19.	3/4" B 25008 MUELLER CORP ON BOTTOM OF SPOOL
20.	FL COUPLING ADAPTER
21.	FL X PE D.I. PIPE

PIPE SCHEDULE FOR 6" AND 8" WATERMAINS

#	DESCRIPTION
1.	8" X 6" MJ x FL REDUCER (NOT USED ON 6" MAINS)
2.	6" X 3" FL TEE
3.	3" FL GATE VALVE WITH HANDWHEEL
4.	6" FL GATE VALVE WITH HANDWHEEL
5.	3" CLA-VAL PRV
6.	6" CLA-VAL PRV
7.	3" 90 DEGREE FL ELBOW
8.	6" FL STRAINER
9.	4" LIQUID FILLED PRESSURE GAUGE UP TO 250 PSI W/ 3/4" BALL VALVE & HOSE BIB (NON-THREADED)
10.	THRUST RESTRAINT W/ WELDED SEEP RING & THRUST BLOCK
11.	FL SPOOL
12.	POLYPROPYLENE M.H. STEPS @ 12" O.C.
13.	3" CLA-VAL PRESSURE RELIEF VALVE (MODEL 50G-01B, SEE NOTE 4) ON LOW PRESSURE SIDE
14.	PIPE SUPPORT
15.	FL STAND PIPE W/ FL GOOSE NECK POINTING DOWNWARD. THE OPEN END OF GOOSE NECK SHALL BE 18" ABOVE GRADE AND PROVIDED WITH A SCREEN (#14 MESH NON-CORRODIBLE).
16.	3" FL STRAINER
17.	12" X 12" RECESSED SUMP WITH REMOVABLE GRATE
18.	MJ OR MECHANICAL COUPLING
19.	3/4" B 25008 MUELLER CORP ON BOTTOM OF SPOOL
20.	FL COUPLING ADAPTER
21.	FL X PE D.I. PIPE

PRESSURE REDUCING VALVE STATION

DATE: APRIL 2014
DRAWING NAME: CW-10B
DRAWN BY: ETL
CHECKED: APPROVED:

REVISIONS

REV	DATE	BY	COMMENTS

SARATOGA SPRINGS CITY

1307 N. COMMERCE DR.
#200, SARATOGA SPRINGS,
UT 84045
PHONE: 801-766-9793
FAX: 8017669794

STANDARD DETAILS

CULINARY WATER

CW-10B

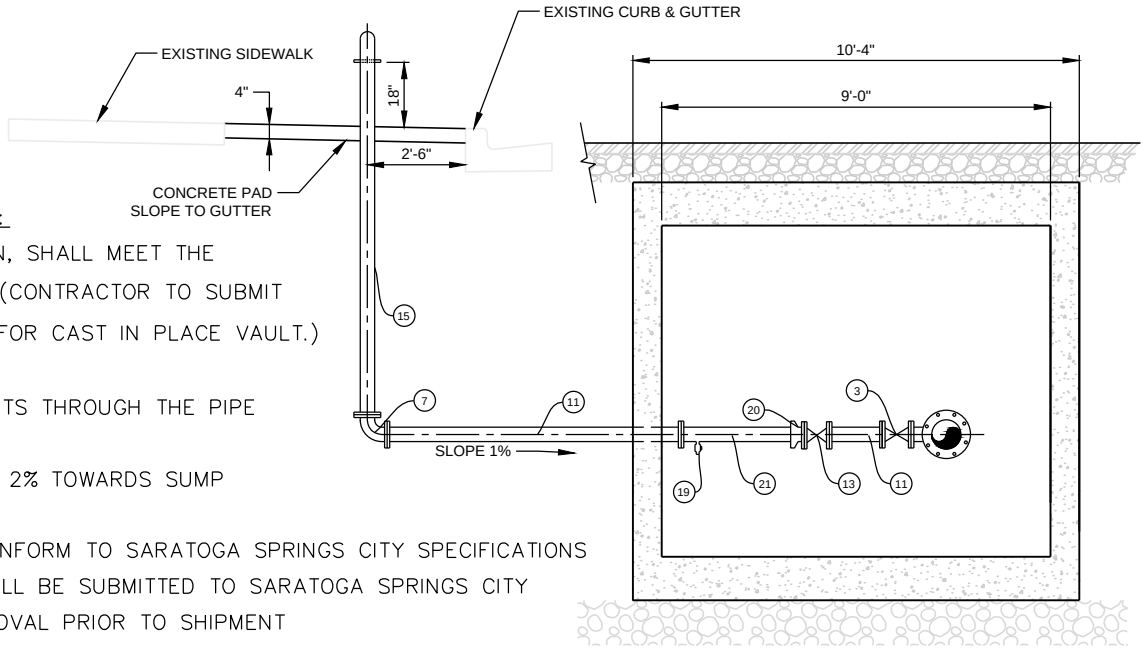

C
-
SECTION VIEW
SCALE: NTS

CONCRETE VAULT NOTES:

PRECAST BOX AS SHOWN, SHALL MEET THE FOLLOWING CONDITIONS. (CONTRACTOR TO SUBMIT STRUCTURAL DRAWINGS FOR CAST IN PLACE VAULT.)

1. H-20 LOADING
2. NO HORIZONTAL JOINTS THROUGH THE PIPE OPENINGS.
3. FLOOR SHALL SLOPE 2% TOWARDS SUMP

GENERAL NOTES:

1. ALL WORK SHALL CONFORM TO SARATOGA SPRINGS CITY SPECIFICATIONS
2. SHOP DRAWINGS SHALL BE SUBMITTED TO SARATOGA SPRINGS CITY ENGINEER FOR APPROVAL PRIOR TO SHIPMENT
3. THE PRV ASSEMBLY DETAIL SHALL BE VERIFIED PER MANUFACTURE RECOMMENDATIONS
4. ALL VALVES SHALL HAVE 150 LB FLG'S, DUCTILE IRON BODY, BRONZE INTERNAL TRIM, EPOXY COATED, AND STAINLESS STEEL TUBES AND FITTINGS
5. PROVIDE DESIGN SUBMITTAL FOR WATERMAIN SIZES ABOVE 12"
6. PROVIDE BOLLARDS OR OTHER PROTECTION IF AND AS DIRECTED BY CITY INSPECTOR.
7. INSTALL AIR-VACUUM RELEIF VALVES WHERE REQUIRED AND AS DIRECTED.

PIPE SCHEDULE FOR 10" AND 12" WATERMAINS

#	DESCRIPTION
1.	12" X 10" MJ x FL REDUCER (NOT USED ON 10" MAINS)
2.	10" X 6" FL TEE
3.	6" FL GATE VALVE WITH HANDWHEEL
4.	10" FL GATE VALVE WITH HANDWHEEL
5.	6" CLA-VAL PRV
6.	10" CLA-VAL PRV
7.	6" 90 DEGREE FL ELBOW
8.	10" FL STRAINER
9.	4" LIQUID FILLED PRESSURE GAUGE UP TO 250 PSI W/ 3/4" BALL VALVE & HOSE BIB (NON-THREADED)
10.	THRUST RESTRAINT W/ WELDED SEEP RING & THRUST BLOCK
11.	FL SPOOL
12.	POLYPROPYLENE M.H. STEPS @ 12" O.C.
13.	6" CLA-VAL PRESSURE RELIEF VALVE (MODEL 50G-01B, SEE NOTE 4) ON LOW PRESSURE SIDE
14.	PIPE SUPPORT
15.	FL STAND PIPE W/ FL GOOSE NECK POINTING DOWNWARD. THE OPEN END OF GOOSE NECK SHALL BE 18" ABOVE GRADE AND PROVIDED WITH A SCREEN (#14 MESH NON-CORRODIBLE).
16.	6" FL STRAINER
17.	12" X 12" RECESSED SUMP WITH REMOVABLE ALUM. GRATE
18.	MJ COUPLING OR MECHANIC COUPLING
19.	3/4" B 25008 MUELLER CORP ON BOTTOM OF SPOOL
20.	FL COUPLING ADAPTER
21.	FL X PE D.I. PIPE

PIPE SCHEDULE FOR 6" AND 8" WATERMAINS

#	DESCRIPTION
1.	8" X 6" MJ x FL REDUCER (NOT USED ON 6" MAINS)
2.	6" X 3" FL TEE
3.	3" FL GATE VALVE WITH HANDWHEEL
4.	6" FL GATE VALVE WITH HANDWHEEL
5.	3" CLA-VAL PRV
6.	6" CLA-VAL PRV
7.	3" 90 DEGREE FL ELBOW
8.	6" FL STRAINER
9.	4" LIQUID FILLED PRESSURE GAUGE UP TO 250 PSI W/ 3/4" BALL VALVE & HOSE BIB (NON-THREADED)
10.	THRUST RESTRAINT W/ WELDED SEEP RING & THRUST BLOCK
11.	FL SPOOL
12.	POLYPROPYLENE M.H. STEPS @ 12" O.C.
13.	3" CLA-VAL PRESSURE RELIEF VALVE (MODEL 50G-01B, SEE NOTE 4) ON LOW PRESSURE SIDE
14.	PIPE SUPPORT
15.	FL STAND PIPE W/ FL GOOSE NECK POINTING DOWNWARD. THE OPEN END OF GOOSE NECK SHALL BE 18" ABOVE GRADE AND PROVIDED WITH A SCREEN (#14 MESH NON-CORRODIBLE).
16.	3" FL STRAINER
17.	12" X 12" RECESSED SUMP WITH REMOVABLE GRATE
18.	MJ OR MECHANICAL COUPLING
19.	3/4" B 25008 MUELLER CORP ON BOTTOM OF SPOOL
20.	FL COUPLING ADAPTER
21.	FL X PE D.I. PIPE

PRESSURE REDUCING VALVE STATION

DATE: APRIL 2014
DRAWING NAME: CW-10B
DRAWN BY: CJG
CHECKED: APPROVED:

REVISIONS

REV	DATE	BY	COMMENTS

SARATOGA SPRINGS CITY

1307 N. COMMERCE DR.
#200, SARATOGA SPRINGS,
UT 84045
PHONE: 801-766-9793
FAX: 8017669794

STANDARD DETAILS

CULINARY WATER

CW-10B

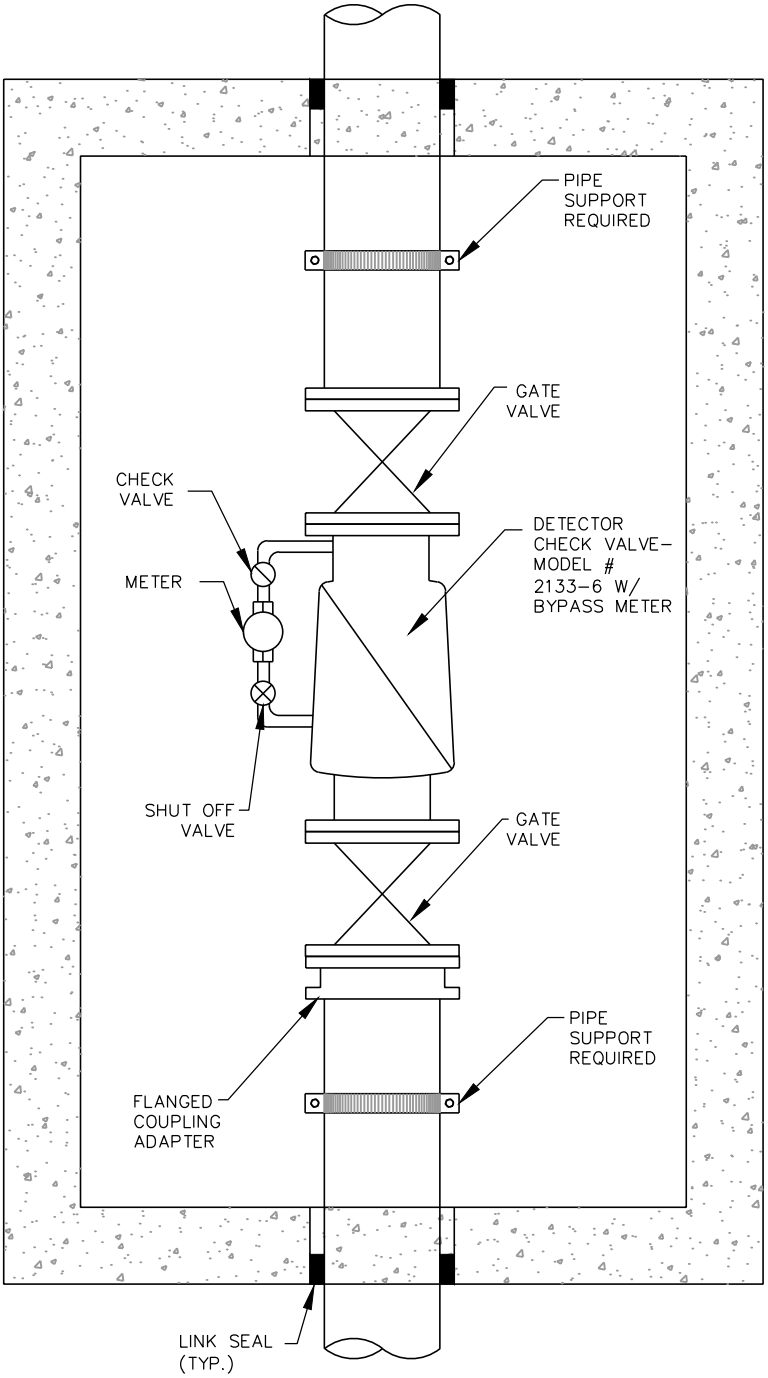

DETECTOR CHECK VALVE

DATE:	APRIL 2014
DRAWING NAME:	CW-11
DRAWN BY:	ETL
CHECKED:	APPROVED:

REVISIONS

REV	DATE	BY	COMMENTS

SARATOGA SPRINGS CITY

1307 N. COMMERCE DR.
#200, SARATOGA SPRINGS,
UT 84045
PHONE: 801-766-9793
FAX: 8017669794

STANDARD DETAILS

CULINARY WATER

CW-11

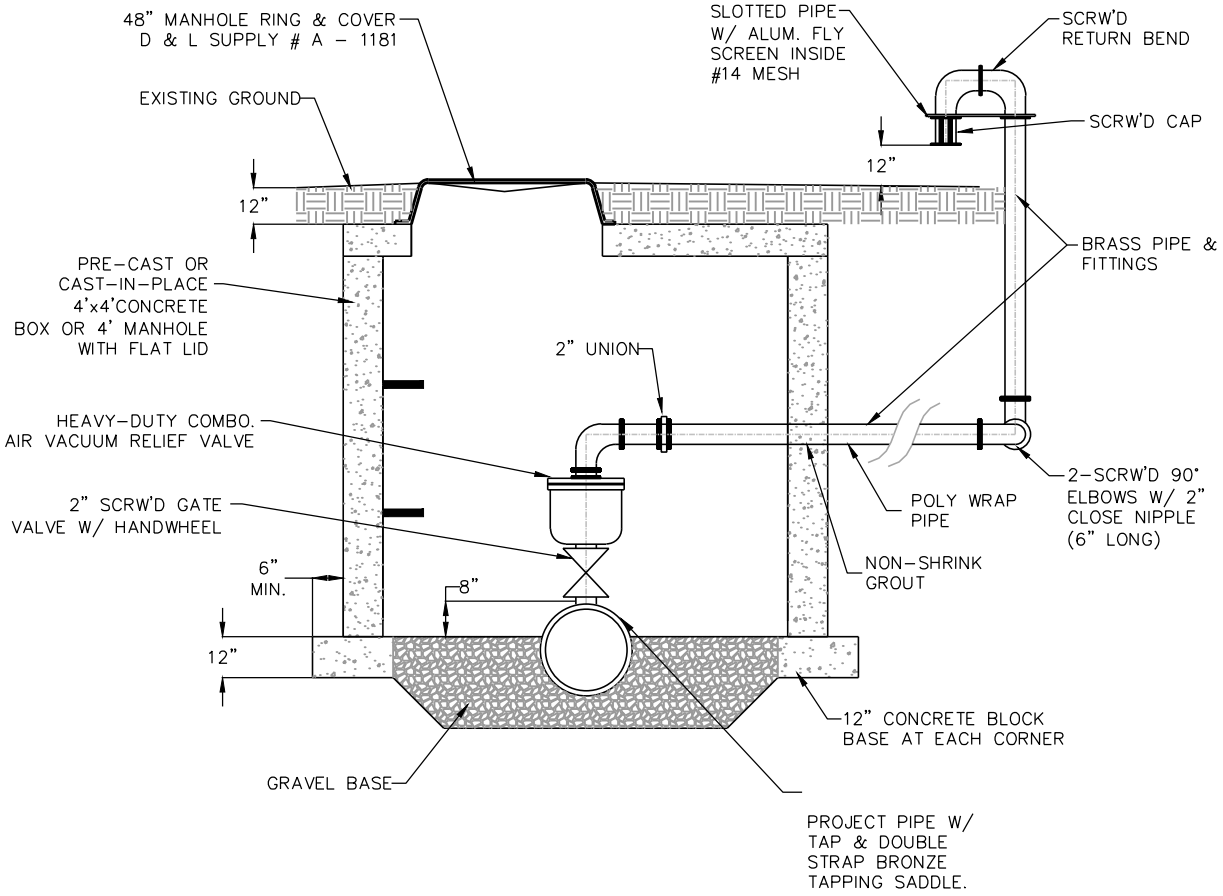

NOTE:

1. SIZE OF AIR-VACUUM RELIEF VALVE & PIPING SHALL BE AS DETERMINED BY PROJECT ENGINEER; AND APPROVED BY CITY ENGINEER.
2. LOCATE RISER IN LANDSCAPED AREA BEHIND CURB & GUTTER OR APPROX. 2 FT. FROM R/W LINE, AS DIRECTED BY CITY ENGINEER.
3. PROVIDE BOLLARDS OR OTHER PROTECTION FOR RISER IF AND AS DIRECTED BY CITY INSPECTOR.

AIR VACUUM RELIEF VALVE

DATE:	APRIL 2014
DRAWING NAME:	CW-12
DRAWN BY:	ETL
CHECKED:	APPROVED:

REVISIONS

REV	DATE	BY	COMMENTS

SARATOGA SPRINGS CITY

1307 N. COMMERCE DR.
#200, SARATOGA SPRINGS,
UT 84045
PHONE: 801-766-9793
FAX: 8017669794

STANDARD DETAILS

CULINARY WATER

CW-12

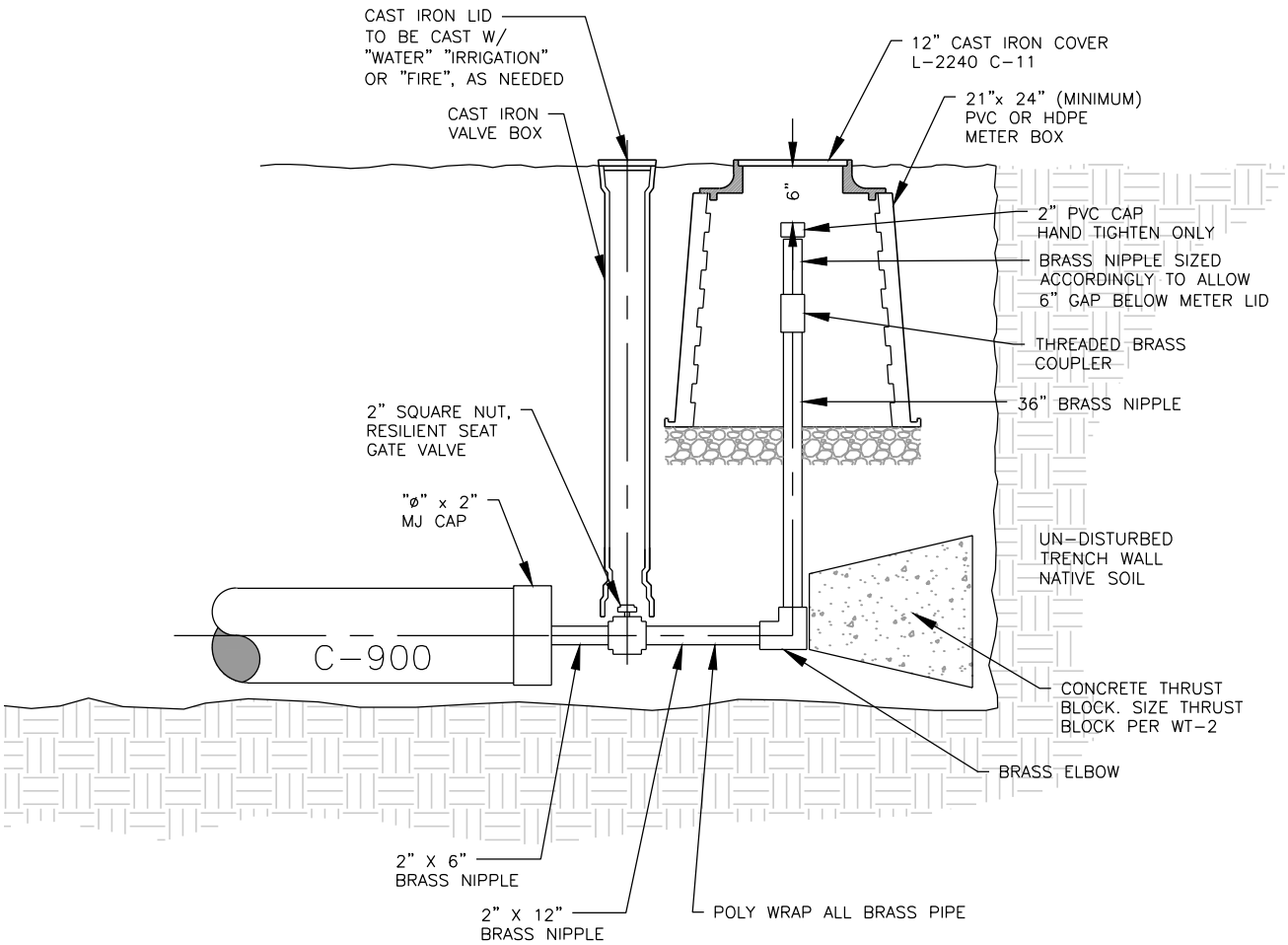

2 INCH BLOW-OFF VALVE

DATE:	APRIL 2014
DRAWING NAME:	CW-13
DRAWN BY:	ETL
CHECKED:	APPROVED:

REVISIONS

REV	DATE	BY	COMMENTS

SARATOGA SPRINGS CITY

1307 N. COMMERCE DR.
#200, SARATOGA SPRINGS,
UT 84045
PHONE: 801-766-9793
FAX: 8017669794

STANDARD DETAILS

CULINARY WATER

CW-13

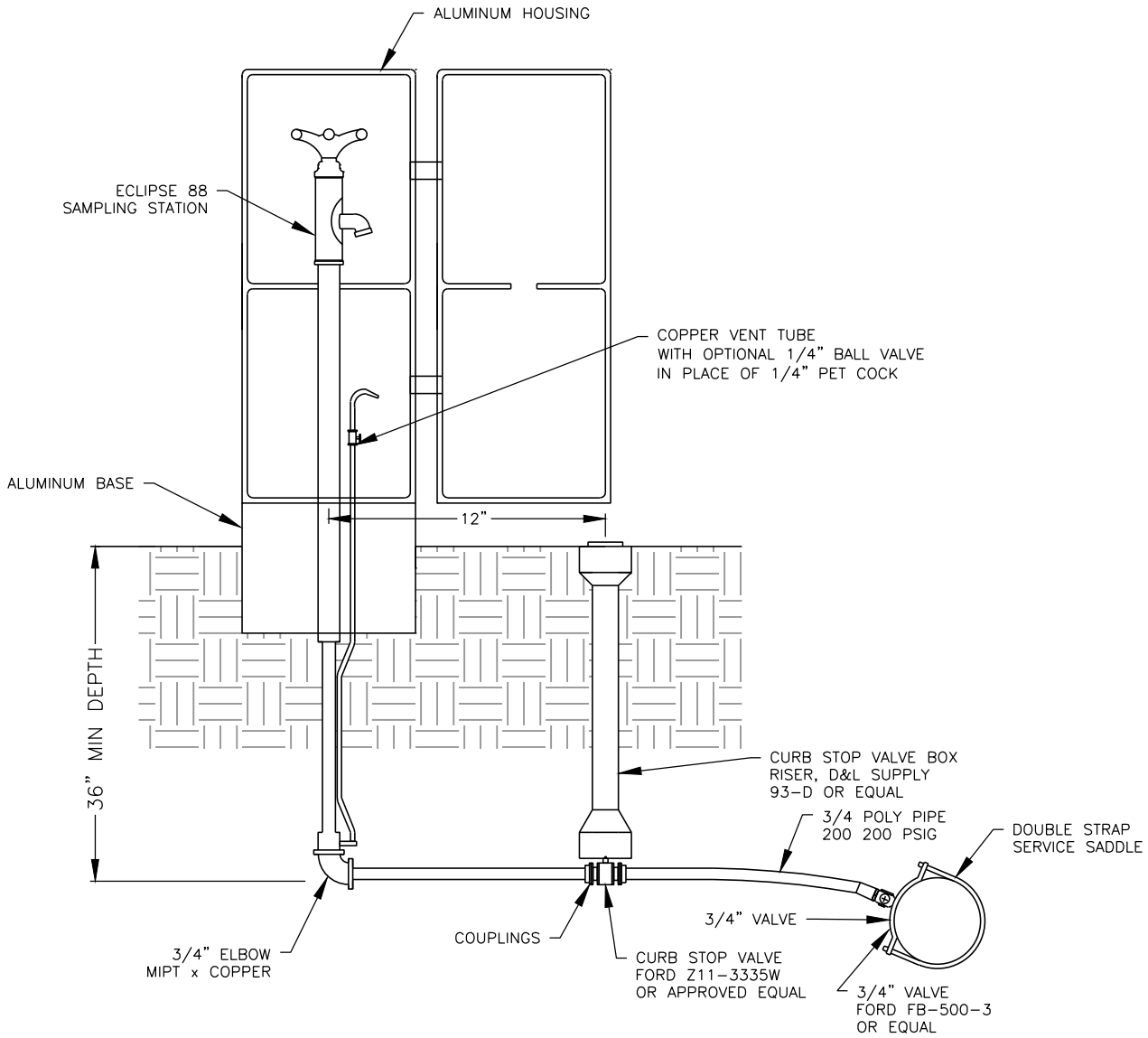

NOTES:

1. ONE SAMPLING STATION REQUIRED IN EACH RESIDENTIAL DEVELOPMENT AND A MINIMUM OF ONE SAMPLING STATION PER 100 LOTS.
2. SAMPLE STATIONS TO BE LOCATED ON A LOT LINE, BEHIND SIDEWALK.
3. PRIOR TO BACKFILLING AROUND THE ASSEMBLY, SECURE INSPECTION OF INSTALLATION BY ENGINEER.
4. PROVIDE BRASS FITTINGS AND NIPPLES IF NOT SPECIFIED OTHERWISE.

SAMPLING STATION

DATE: **APRIL 2014**

DRAWING NAME: **CW-14**

DRAWN BY: **ETL**

CHECKED: APPROVED:

REVISIONS

REV	DATE	BY	COMMENTS

SARATOGA SPRINGS CITY

1307 N. COMMERCE DR.
#200, SARATOGA SPRINGS,
UT 84045
PHONE: 801-766-9793
FAX: 8017669794

STANDARD DETAILS

CULINARY WATER

CW-14

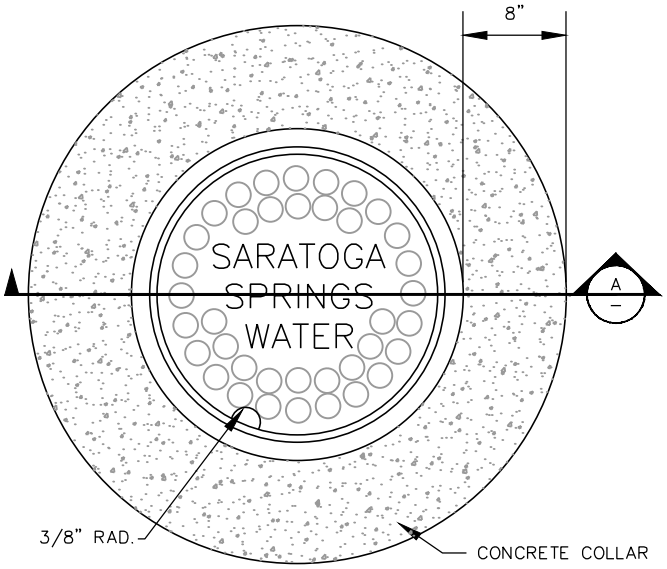

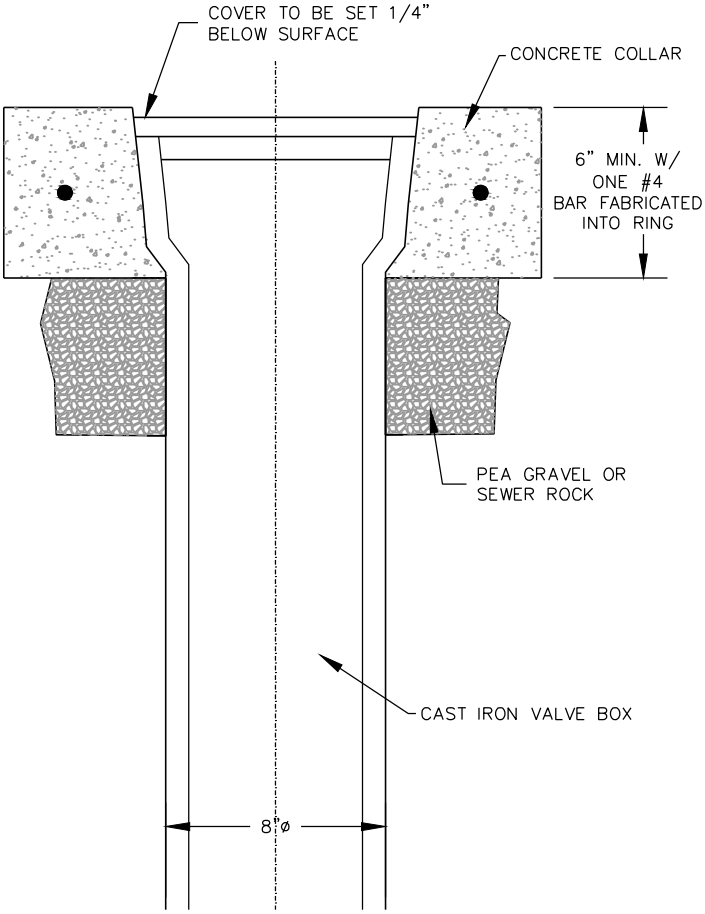

NOTES:

1. ALL WORK SHALL CONFORM TO APWA STANDARDS UNLESS OTHERWISE APPROVED BY CITY ENGINEER

CONCRETE COLLAR

DATE:	APRIL 2014
DRAWING NAME:	CW-15
DRAWN BY:	ETL
CHECKED:	APPROVED:

REVISIONS

REV	DATE	BY	COMMENTS

SARATOGA SPRINGS CITY

1307 N. COMMERCE DR.
#200, SARATOGA SPRINGS,
UT 84045
PHONE: 801-766-9793
FAX: 8017669794

STANDARD DETAILS

STREET STANDARDS

CW-15

STANDARD SECONDARY WATERLINE DETAILS

INDEX:

PI-1 TRENCH DETAIL
PI-2 CONCRETE THRUST BLOCKS
PI-3 1" SINGLE AND DUAL LATERALS
PI-4 SECONDARY WATER CONNECTION FOR PARKS & OPEN SPACE
PI-5A 1" IRRIGATION SERVICE
PI-5B SINGLE 1" PRESSURE IRRIGATION SERVICE BOX
PI-5C PARTS LIST FOR 1" IRRIGATION SERVICE
PI-6 2" IRRIGATION SERVICE
PI-7 4" METER VAULT
PI-8 AIR/VACUUM RELIEF VALVE
PI-9 2" & 4" DRAIN VALVES
PI-10 RPZ BACKFLOW PREVENTOR FOR LATERALS
PI-11 RPZ BACKFLOW PREVENTOR FOR MAINS
PI-12 2" BLOW OFF VALVE
PI-13 CONCRETE COLLAR

SECONDARY WATER DETAILS

DATE: APRIL 2014
DRAWING NAME: PI-0
DRAWN BY: ETL
CHECKED:
APPROVED:

REVISIONS

REV	DATE	BY	COMMENTS

SARATOGA SPRINGS CITY

1307 N. COMMERCE DR.
#200, SARATOGA SPRINGS,
UT 84045
PHONE: 801-766-9793
FAX: 8017669794

STANDARD DETAILS

SECONDARY WATER

PI-0

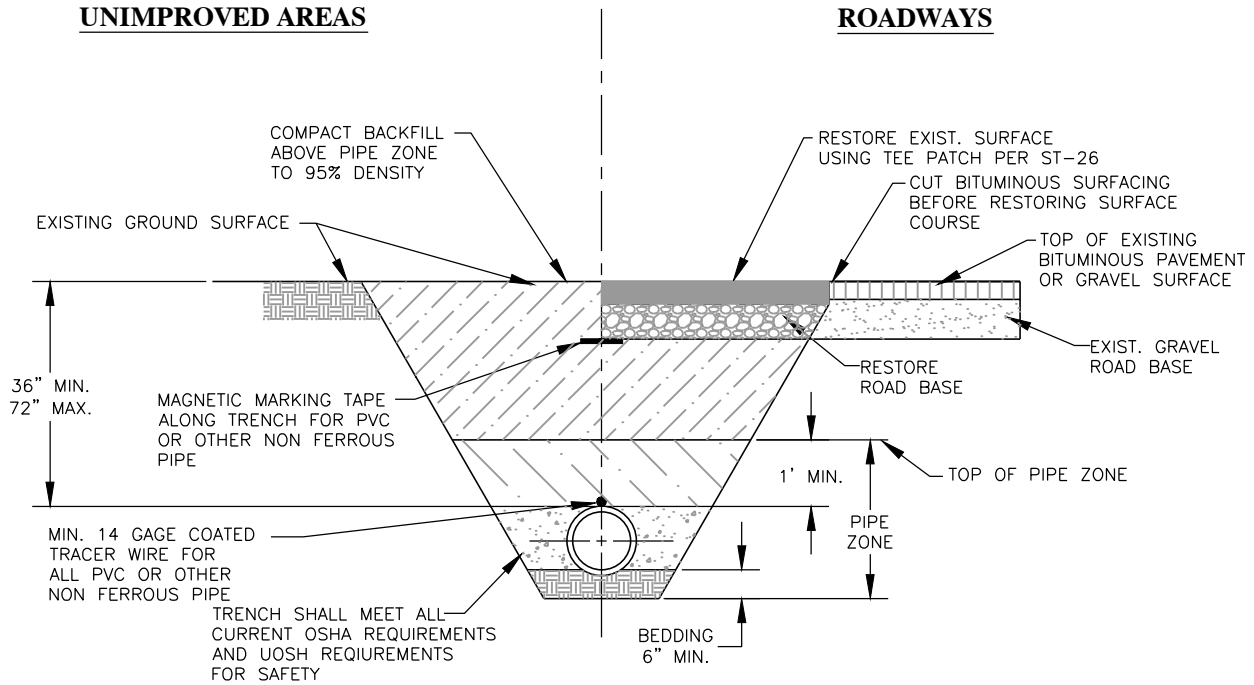

CROSS-SECTION: TYPICAL TRENCH

NOTES:

1. WATER LINES 12 INCHES AND LARGER SHALL BE DUCTILE IRON CLASS-51.

2. WATER LINES 10 INCHES AND SMALLER SHALL BE PVC AWWA C900 CLASS 200.

3. VALVES 12 INCHES AND LARGER SHALL BE BUTTERFLY VALVES.

4. WHENEVER POSSIBLE "HOT TAP" CONNECTIONS REQUIRED. HOT TAP VALVE TO BE SUPPORTED DURING CONNECTION. CONTRACTOR TO NOTIFY CITY 24 HOURS IN ADVANCE OF MAKING CONNECTION.

5. PIPE ZONE SHALL BE BACKFILLED WITH BEDDING MATERIAL, OR OTHER ACCEPTABLE MATERIAL.

6. TRACING WIRE TO BE BROUGHT OUTSIDE OF BOTTOM PORTION OF VALVE BOX AND INSIDE TOP TO SURFACE.

7. FURNISH AND INSTALL POLY-WRAP ON DUCTILE IRON PIPE. POLY-WRAP MAY BE DELETED WHERE DIRECTED BY CITY ENGINEER.

8. WHERE COLLAPSIBLE SOILS ARE ENCOUNTERED, FURNISH, PLACE AND COMPACT IMPORTED BACKFILL MATERIALS AS REQUIRED AND AS DIRECTED.

CONSTRUCTION NOTES:

1. THE CONTRACTOR SHALL BE RESPONSIBLE FOR MEETING ALL OF THE REQUIREMENTS ESTABLISHED FOR SAFE TRENCHING. (SEE OSHA AND UOSH REQUIREMENTS, LATEST EDITIONS).

2. MINIMUM COVER OVER TOP OF PIPE SHALL BE 36-INCHES BELOW THE FINISHED GRADE. THIS DEPTH MAY BE INCREASED AS REQUIRED TO MISS UNDERGROUND UTILITIES, STORM DRAINS, OR OTHER OBSTRUCTIONS, OR WHERE INDICATED ON THE DRAWINGS.

3. CONTRACTOR SHALL LOCATE ALL UNDERGROUND UTILITIES BEFORE LAYING PIPE WITHIN 200 FEET OF UTILITY CROSSINGS SHOWN ON THE DRAWINGS, OR AS "BLUE-STAKED."

4. SEWER MAINS, WATER MAINS, GAS MAINS AND OTHER UTILITIES ARE SHOWN ON THE PLANS IN A GENERAL SCHEMATIC WAY ACCORDING TO INFORMATION RECEIVED FROM OTHERS AND SOMETIMES FROM FIELD MEASUREMENTS. THE ACCURACY OR COMPLETENESS OF THE LOCATIONS SHOWN IS NOT GUARANTEED. THE CONTRACTOR SHALL DETERMINE THE ACTUAL LOCATION OF EXISTING SERVICE CONNECTIONS AND UTILITIES AND TAKE THE NECESSARY STEPS TO AVOID THEM.

5. ANY DAMAGE TO EXISTING UTILITIES SHALL BE REPAIRED AT THE CONTRACTOR'S SOLE EXPENSE.

6. THE CONTRACTOR MAY, AT HIS DISCRETION, USE SLOPING WALLS IN UNIMPROVED TERRAIN.

SECONDARY WATERLINE TRENCH

DATE: **APRIL 2014**

DRAWING NAME: **PI-1**

DRAWN BY: **ETL**

CHECKED: APPROVED:

REVISIONS

REV	DATE	BY	COMMENTS

SARATOGA SPRINGS CITY

1307 N. COMMERCE DR.
#200, SARATOGA SPRINGS, UT 84045
PHONE: 801-766-9793
FAX: 8017669794

STANDARD DETAILS

SECONDARY WATER

PI-1

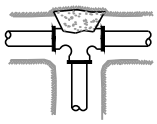

TEE

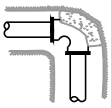

90° ELBOW

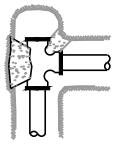

TEE WITH CAP

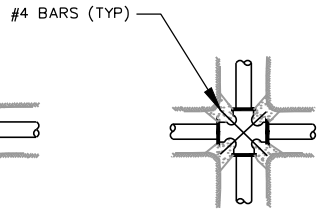

CROSS

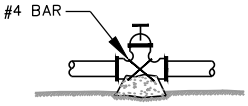

VALVE

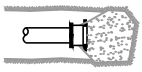

CAP OR PLUG

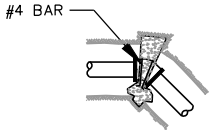

ELBOW

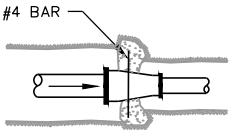

REDUCER

SAFE BEARING LOADS

SOIL TYPE	SAFE BEARING LOAD (lb/ft²)
SAND	1000
SAND & GRAVEL	1500
SAND & GRAVEL CEMENTED WITH CLAY	2000
SHALE	5000

SAFE BEARING LOAD FORMULA

THRUST BLOCK AREA AGAINST TRENCH WALL (SQUARE FEET) = THRUST ON FITTING / SAFE BEARING LOAD OF SOIL

NOTES:

1. REINFORCING BARS SHALL BE EPOXY COATED
2. RESIDENT PROJECT ENGINEER WILL CALCULATE QUANTITIES OF CONCRETE REQ'D AND SPECIFY PLACEMENT METHODS & REQUIREMENTS; WHICH SHALL BE APPROVED BY CITY ENGINEER
3. CONCRETE SHALL BE 4000 PSI MIN.
4. POUR CONCRETE AGAINST UNDISTURBED SOIL

THRUST ON FITTINGS

POUNDS @ 1 POUND PER SQUARE INCH OF WATER PRESSURE*

PIPE SIZE	TEES/ PLUGS	90° BENDS	45° BENDS	22.5° BENDS
4"	18.5	26.1	14.2	7.2
6"	38	53.7	29.1	14.7
8"	65.8	93	50.4	25.5
10"	107.5	152	82.4	41.7
12"	153.1	216.4	117.2	59.4
14"	215.5	304.7	164.9	84
16"	281.5	398.1	215.4	109.8
18"	356.3	503.8	272.6	139
20"	439.8	622	336.6	171.6
24"	633.3	895.6	484.7	247.1

*MULTIPLY THRUST BY MAXIMUM WATER PRESSURE

*PIPE SIZES LARGER THAN 24" SHALL BE THRUST BLOCKED AS PER ENGINEER RECOMMENDATION

THRUST BLOCK AREA AGAINST TRENCH WALL (SQUARE FEET)

ASSUMING SAND AND MAX PRESSURE OF 150 PSI SIZE MAY BE REDUCED WITH AN ENGINEERED SUBMITTAL AND AS APPROVED BY THE CITY ENGINEER

PIPE SIZE	TEES/ PLUGS	90° BENDS	45° BENDS	22.5° BENDS
4"	2.8	3.9	2.1	1.1
6"	5.7	8.1	4.4	2.2
8"	9.9	14.0	7.6	3.8
10"	16.1	22.8	12.4	6.3
12"	23.0	32.5	17.6	8.9
14"	32.3	45.7	24.7	12.6
16"	42.2	59.7	32.3	16.5
18"	53.4	75.6	40.9	20.9
20"	66.0	93.3	50.5	25.7
24"	95.0	134.3	72.7	37.1

CONCRETE THRUST BLOCKS

DATE: APRIL 2014

DRAWING NAME: PI-2

DRAWN BY: ELT

CHECKED: APPROVED:

REVISIONS

REV	DATE	BY	COMMENTS

SARATOGA SPRINGS CITY

1307 N. COMMERCE DR.
#200, SARATOGA SPRINGS, UT 84045
PHONE: 801-766-9793
FAX: 8017669794

STANDARD DETAILS

SECONDARY WATER

PI-2

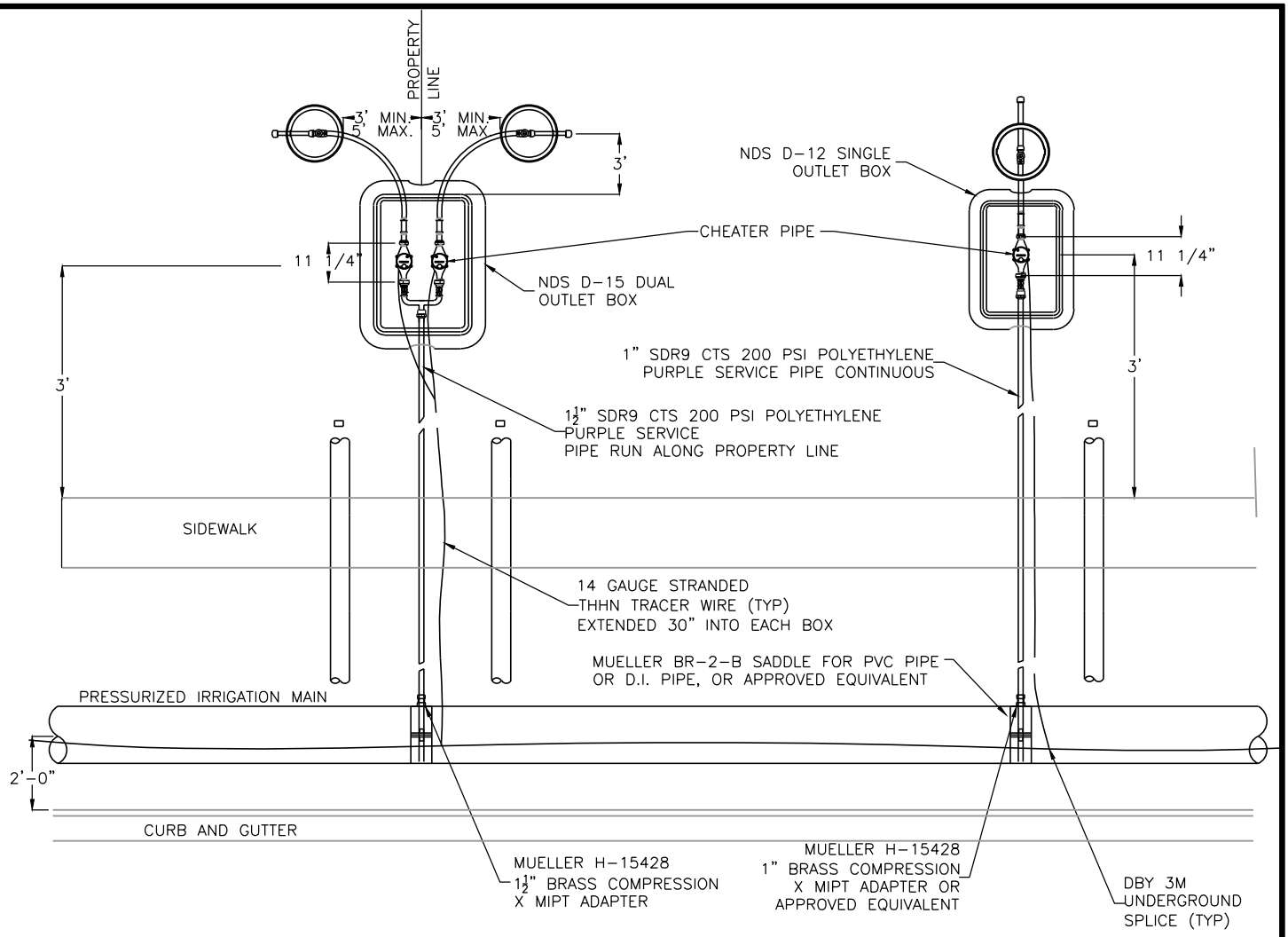

PLAN

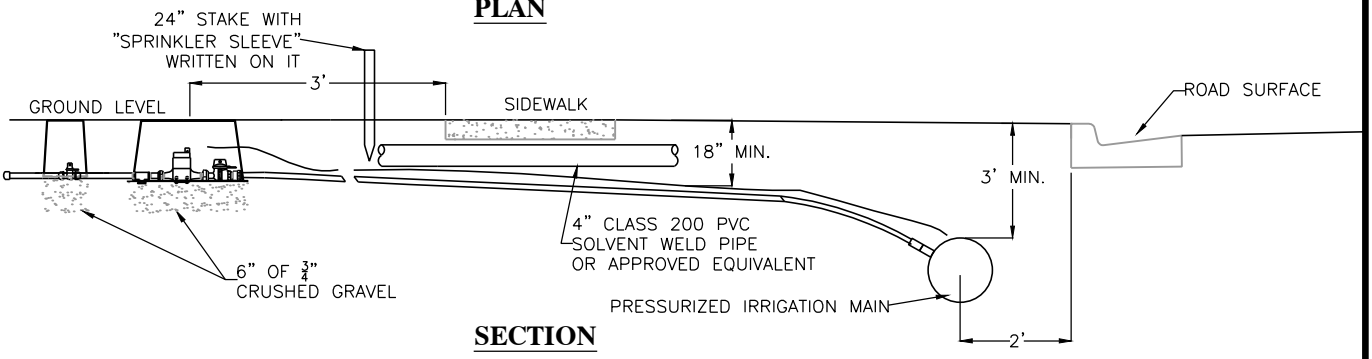

SECTION

NOTES:

1. STANDARD SERVICE SIZE SHALL BE 1½" FOR DUAL SERVICES AND 1" FOR SINGLE SERVICES. SEE DETAIL PI-5A AND PI-5B FOR SERVICE BOX AND METER DETAILS
2. STAINLESS STEEL LINER INSERTS WILL BE REQUIRED INSIDE OF TUBING AT COMPRESSION FITTINGS.
3. ALL FITTINGS SHALL BE COMPATIBLE WITH SERVICE SIZE.
4. SERVICE LATERAL SHALL SLOPE TOWARDS PRESSURIZED IRRIGATION MAIN.
5. SPRINKLER SLEEVE SHALL NOT BE IN LINE WITH ANY UTILITY BOXES.
6. 4" SLEEVE SHALL BE BURIED 1' BELOW GRADE.
7. CHEATER PIPE TO BE EXACTLY 11 1/4" FROM FACE TO FACE.

1" SINGLE & DUAL PRESSURIZED IRRIGATION SERVICE LATERAL

DATE: APRIL 2014

DRAWING NAME: PI-3

DRAWN BY:

CHECKED: APPROVED:

REVISIONS

REV	DATE	BY	COMMENTS
B	1/21/05	jmc	update notes
C	4-6-06	MH	WR WHITE REDLINES

SARATOGA SPRINGS CITY

1307 N. COMMERCE DR.
#200, SARATOGA SPRINGS,
UT 84045
PHONE: 801-766-9793
FAX: 8017669794

STANDARD DETAILS

PRESSURIZED IRR.

PI-3

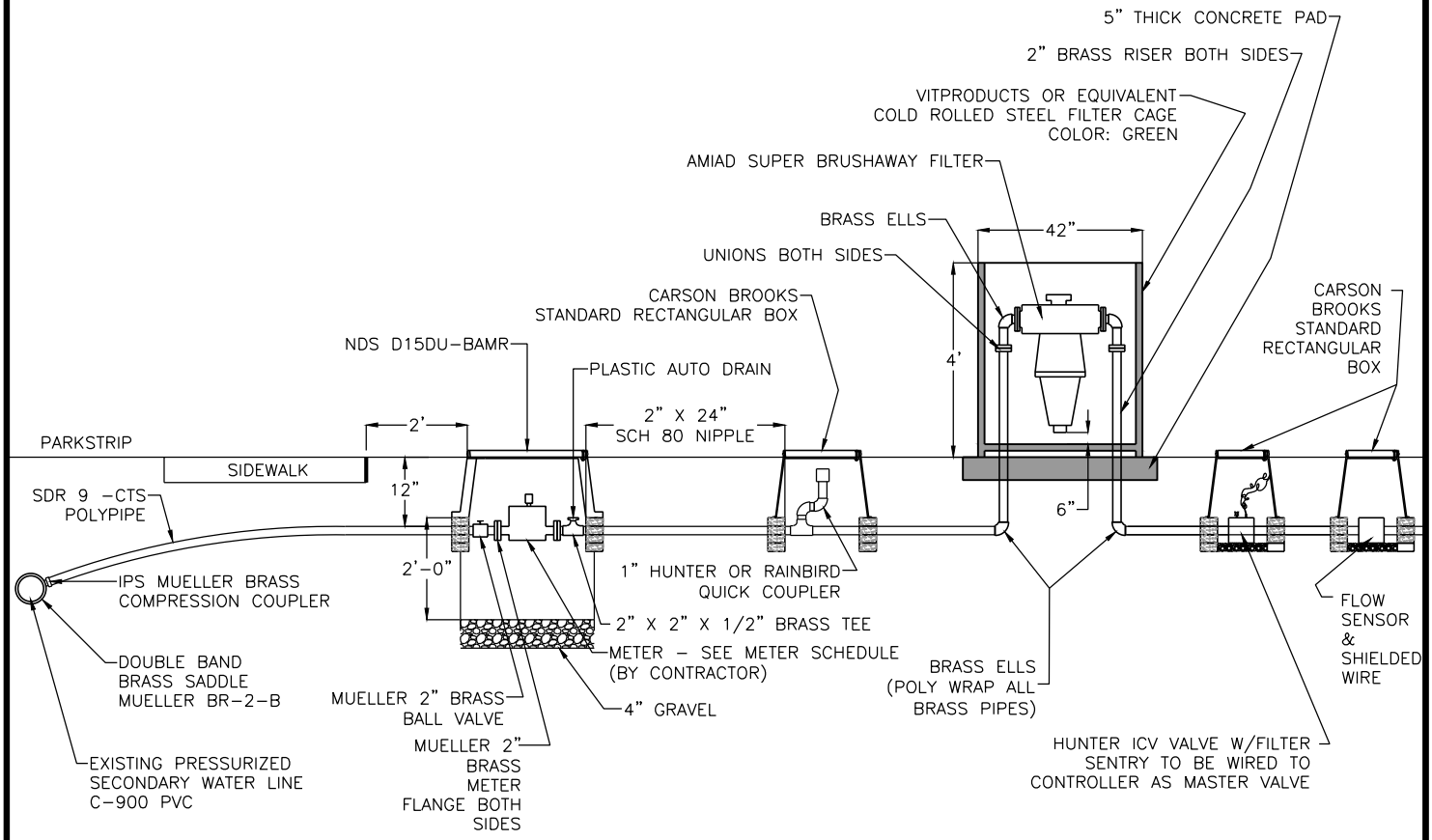

PUBLIC PARKS & OPEN SPACE SECONDARY WATER CONNECTION (2" & SMALLER P.O.C.)

NOTES:

1. MINIMUM SURFACE RESTORATION SHALL BE 3" BITUMINOUS OVER 8" ROADBASE COMPACTED TO 95%. AT MAJOR STREETS, CITY ENGINEER WILL PROVIDE PAVEMENT DESIGN.

2. SERVICES MAY BE TUNNELED OR JETTED UNDER CURB AND GUTTER, DRIVEWAYS, OR SIDEWALKS. OTHER STRUCTURES SHALL BE OPEN CUT WITH SURFACE RESTORATION AT THE ENGINEERS DIRECTION.

3. IF TAPPING SADDLES ARE USED, METHOD OF SAWING/DRILLING TAP HOLES, TYPE OF SADDLE, PROCEDURES MUST BE APPROVED BY THE ENGINEER PRIOR TO INSTALLATION.

4. ALL PIPE AND FITTINGS UPSTREAM OF FILTER TO BE SCH 80 UNLESS SPECIFIED AS BRASS.

5. SCH 40 PIE AND FITTINGS ALLOWED DOWNSTREAM OF FILTER.

6. NO MALE ADAPTERS.

7. 18" BURY TO TOP OF PIPE.

8. CONTRACTOR SHALL BE RESPONSIBLE FOR MEETING ALL OF THE REQUIREMENTS ESTABLISHED FOR SAFE TRENCHING. (SEE OSHA REQUIREMENTS)

9. ALL CONSTRUCTION SHALL MEET CURRENT SARATOGA SPRINGS CITY STANDARDS, SPECIFICATIONS, & ORDINANCES.

10. STAINLESS STEEL LINER INSERTS WILL BE REQUIRED INSIDE OF TUBING AT COMPRESSION FITTINGS.

11. ALL FITTINGS SHALL BE COMPATIBLE WITH SERVICE SIZE.

12. SEE STANDARD FOR PRESSURIZED IRRIGATION SERVICE BOX, 2" PRESSURIZED IRRIGATION SERVICE, AND 4" PRESSURIZED IRRIGATION SERVICE.

13. SERVICE LATERAL SHALL SLOPE TOWARDS PRESSURIZED IRRIGATION MAIN.

14. SPRINKLER SLEEVE SHALL NOT BE IN LINE WITH ANY UTILITY BOXES.

15. SEE SERVICE DETAILS FOR BOX DESCRIPTIONS & TYPES

16. ALL PIPES TO BE BURIED WITH 14 GAUGE STRANDED THHN TRACE WIRE AND MARKING TAPE.

SECONDARY WATER CONNECTION FOR PUBLIC PARKS & OPEN SPACES

DATE:	APRIL 2014
DRAWING NAME:	PI-4
DRAWN BY:	ETL
CHECKED:	APPROVED:

REVISIONS

REV	DATE	BY	COMMENTS

SARATOGA SPRINGS CITY

1307 N. COMMERCE DR.
#200, SARATOGA SPRINGS,
UT 84045
PHONE: 801-766-9793
FAX: 8017669794

STANDARD DETAILS

SECONDARY WATER

PI-4

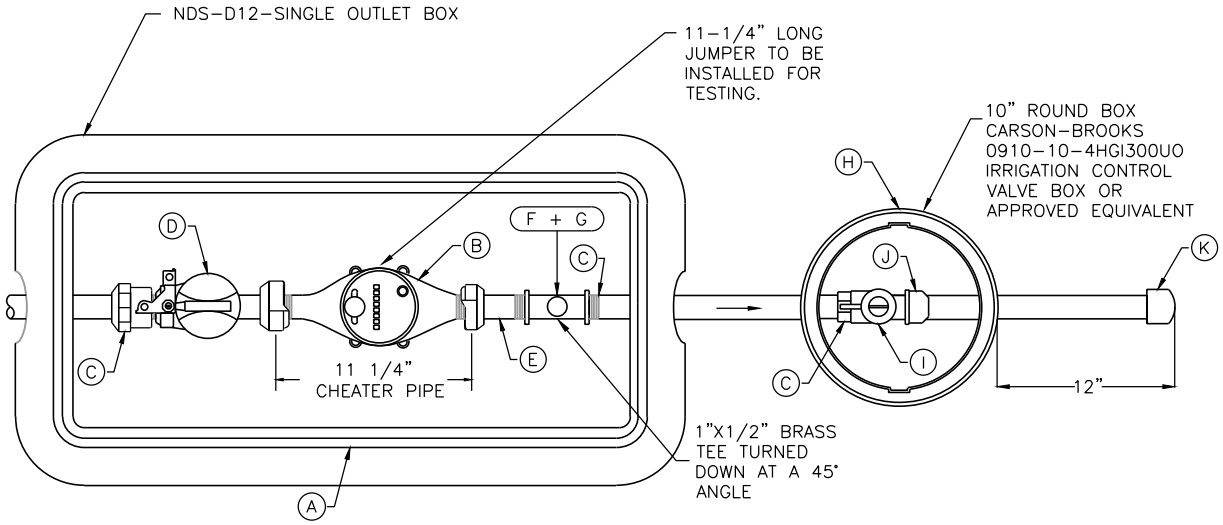

PLAN

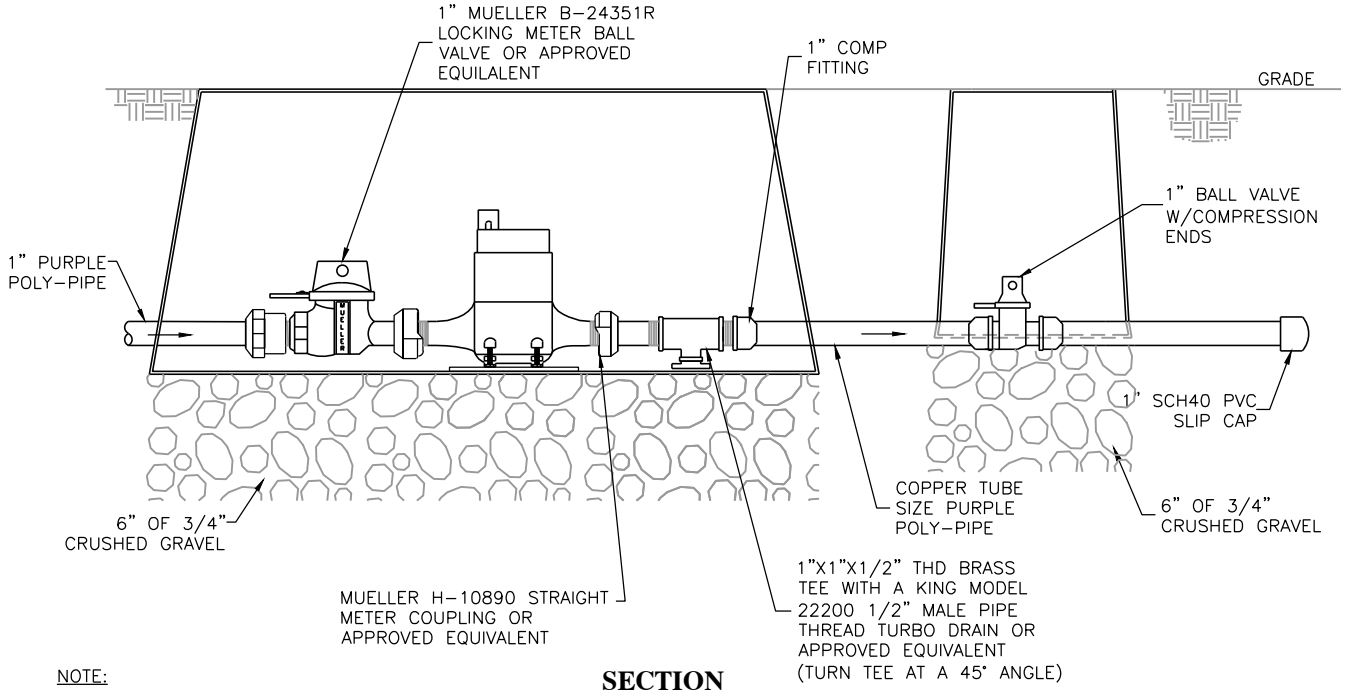

SECTION

NOTE:

1. 1" METERS PROVIDED BY CITY
2. ALL PIPES SHALL BE BURIED WITH 14 GAUGE STRANDED THHN TRACE WIRE
3. CHEATER PIPE TO BE EXACTLY 11' 1/4" FROM FACE TO FACE

SINGLE 1" PRESSURE IRRIGATION SERVICE BOX

DATE:	APRIL 2014
DRAWING NAME:	PI-5A
DRAWN BY:	ETL
CHECKED:	APPROVED:

REVISIONS

REV	DATE	BY	COMMENTS

SARATOGA SPRINGS CITY

1307 N. COMMERCE DR.
#200, SARATOGA SPRINGS,
UT 84045
PHONE: 801-766-9793
FAX: 8017669794

STANDARD DETAILS

SECONDARY WATER

PI-5A

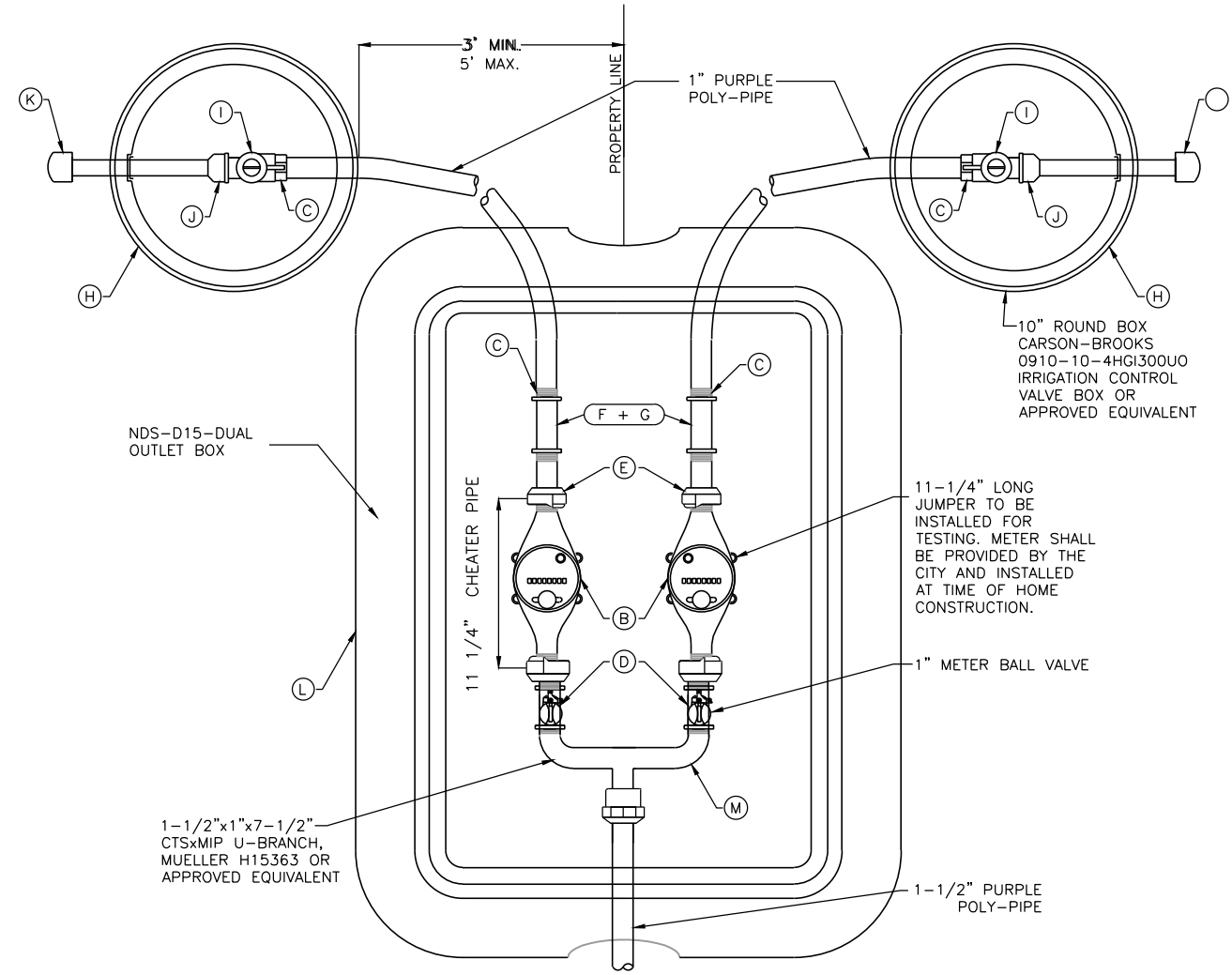

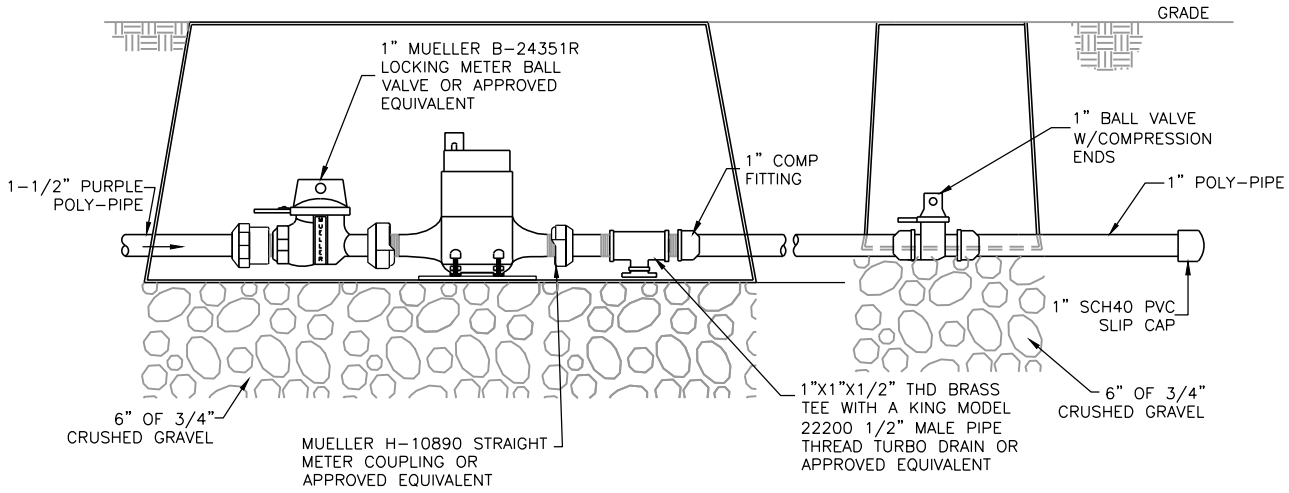

Note:
1. CHEATER PIPE TO BE EXACTLY 11' 1/4" FROM FACE TO FACE.

DUAL SERVICE 1 1/2" PRESSURE IRRIGATION SERVICE BOX

DATE: APRIL 2014

DRAWING NAME: PI-5B

DRAWN BY:

CHECKED: APPROVED:

REVISIONS

REV	DATE	BY	COMMENTS
B	1/21/05	jmc	Concrete Block
C	4-6-06	MH	WR WHITE REDLINES

SARATOGA SPRINGS CITY

1307 N. COMMERCE DR.
#200, SARATOGA SPRINGS,
UT 84045
PHONE: 801-766-9793
FAX: 8017669794

C
STANDARD DETAILS

PI-5B

SCHEDULE OF PLUMBING MATERIAL FOR WATER METER BOXES

1" SINGLE SERVICE CONNECTION

ITEM	QUANTITY	DESCRIPTION
A	1ea	14"x19"x12" METER BOX W/ SINGLE OUTLET
B	1ea	1" METER (SUPPLIED AND INSTALLED BY CITY)
C	3ea	1" COUPLER CCT/MIPT H15428
D	1ea	1" STR BALL METER VALVE B24351R
E	1ea	1" STR METER COUPLER H10890
F	1ea	1"X1/2" BRASS TEE
G	1ea	1/2" MALE PIPE THREAD AUTO DRAIN
H	1ea	10" IRRIGATION VALVE BOX
I	1ea	1" BRASS BALL VALVE 600 WOG
J	1ea	1" MALE ADAPT SXM1PT SCH 40
K	1ea	1" SLIP CAP SHC 40

1 1/2" TO DUAL 1" SERVICE CONNECTION

ITEM	QUANTITY	DESCRIPTION
L	1ea	13"x20"x12" JUMBO METER BOX W/ DOUBLE OUTLET
B	2ea	1" METER (SUPPLIED AND INSTALLED BY CITY)
M	1ea	1.5"X7.5" CTSxMIP U-BRANCH H15363
D	2ea	1" STR BALL METER VALVE B24351R
E	2ea	1" STR METER COUPLER H10890
F	2ea	1"X1/2" BRASS TEE
G	2ea	1/2" MALE PIPE THREAD AUTO DRAIN
C	4ea	1" COUPLER CCT/MIPT H15428
I	2ea	1" BRASS BALL VALVE 600 WOG
H	2ea	10" IRRIGATION VALVE BOX
J	2ea	1" MALE ADAPT SXM1PT SCH 40
K	2ea	1" SLIP CAP SHC 40

PARTS LIST FOR 1" SINGLE SERVICE METER BOX & 1-1/2" TO DUAL 1" SERVICE

DATE: APRIL 2014
DRAWING NAME: PI-5C
DRAWN BY: ETL
CHECKED: APPROVED:

REVISIONS

REV	DATE	BY	COMMENTS

SARATOGA SPRINGS CITY

1307 N. COMMERCE DR.
#200, SARATOGA SPRINGS, UT 84045
PHONE: 801-766-9793
FAX: 8017669794

STANDARD DETAILS

SECONDARY WATER

PI-5C

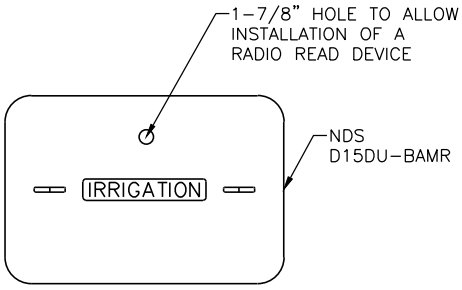

IRRIGATION BOX

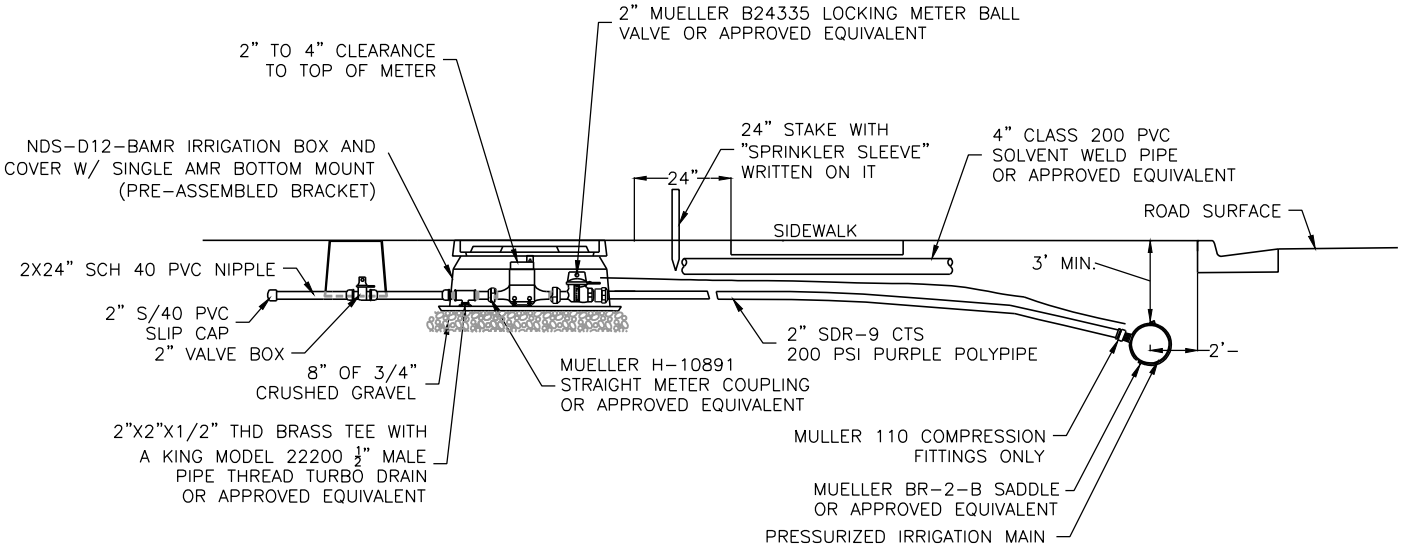

SECTION

NOTES:

1. ADJUST ALL APPURTENCES TO AN EQUIVALENT $1\frac{1}{2}$" SIZE FOR $1\frac{1}{2}$" SERVICES.

2. SPRINKLER SLEEVE SHALL NOT BE IN LINE WITH ANY UTILITY BOXES.

3. ALL PIPES SHALL BE BURIED WITH 14 GAUGE STRANDED THHN TRACE WIRE AND MAGNETIC MARKING TAPE.

IRRIGATION SERVICE 2" PRESSURIZED

DATE:	APRIL 2014
DRAWING NAME:	PI-6
DRAWN BY:	ETL
CHECKED:	APPROVED:

REVISIONS

REV	DATE	BY	COMMENTS

SARATOGA SPRINGS CITY

1307 N. COMMERCE DR.
#200, SARATOGA SPRINGS,
UT 84045
PHONE: 801-766-9793
FAX: 8017669794

STANDARD DETAILS

SECONDARY WATER

PI-6

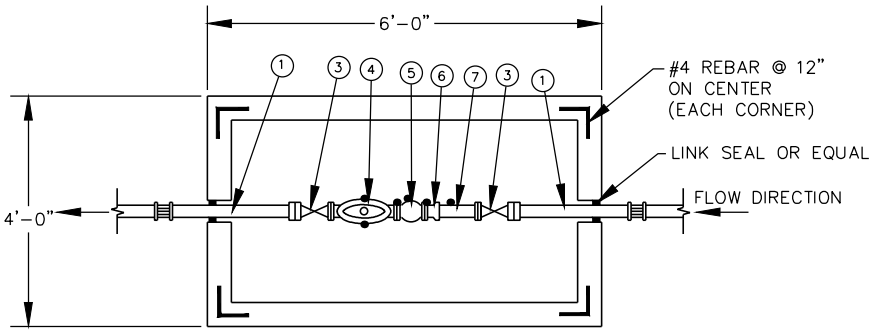

PLAN VIEW

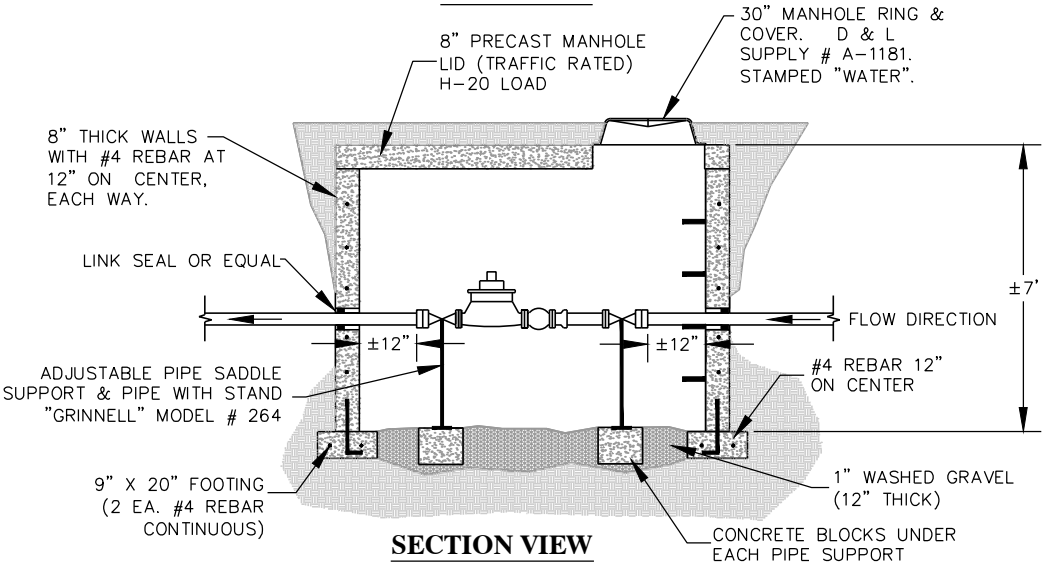

SECTION VIEW

NOTES:

1. INSPECTION: METER BOX AND SERVICE LINE SHALL BE INSPECTED BY CITY PRIOR TO BACKFILLING.

2. BACKFILL: INSTALL BACKFILL IN LIFTS NOT EXCEEDING 8" AFTER COMPACTION. COMPACT EACH LIFT TO AN AVERAGE DRY DENSITY OF 97% WITH NO DENSITY TEST RESULT LESS THAN 92%.

3. ALL 4" INTERIOR FITTINGS TO BE FLANGED.

4. WATER METERS SHALL BE PROVIDED BY CONTRACTOR.

5. PLACEMENT: ALL METERS ARE TO BE INSTALLED IN THE PARK STRIP OR WITHIN 7 FEET OF THE PROPERTY LINE (STREET SIDE) AND MUST BE PLACED NEAR MIDPOINT OF THE LOT AND MUST NOT BE LOCATED IN A DRIVEWAY, OR IN A SIDEWALK.

6. CONTRACTOR SHALL SUPPLY ALL MATERIALS AND LABOR.

7. ALL PIPES SHALL BE BURIED WITH 14 GUAGE STRANDED THHN TRACE WIRE AND MARKING TAPE.

4" PIPE SCHEDULE

#	QTY	DESCRIPTION
1	1	FLxPE D.I. SPOOL LENGTH = ±48"
3	1	4" FLxFL GATE VALVE (MUELLER)*
4	1	4" FLxFL METER
5	1	FLANGED METER STRAINER
6	1	4" FLANGED COUPLING ADAPTER
7	1	FLxPE D.I. SPOOL (LENGTH AS NEEDED)

* GATE VALVE SHALL BE FURNISHED WITH A HANDWHEEL.

SECONDARY WATER 4 INCH METER VAULT

DATE: APRIL 2014
DRAWING NAME: PI-7
DRAWN BY: ETL
CHECKED: APPROVED:

REVISIONS

REV	DATE	BY	COMMENTS

SARATOGA SPRINGS CITY

1307 N. COMMERCE DR.
#200, SARATOGA SPRINGS, UT 84045
PHONE: 801-766-9793
FAX: 8017669794

STANDARD DETAILS

SECONDARY WATER

PI-7

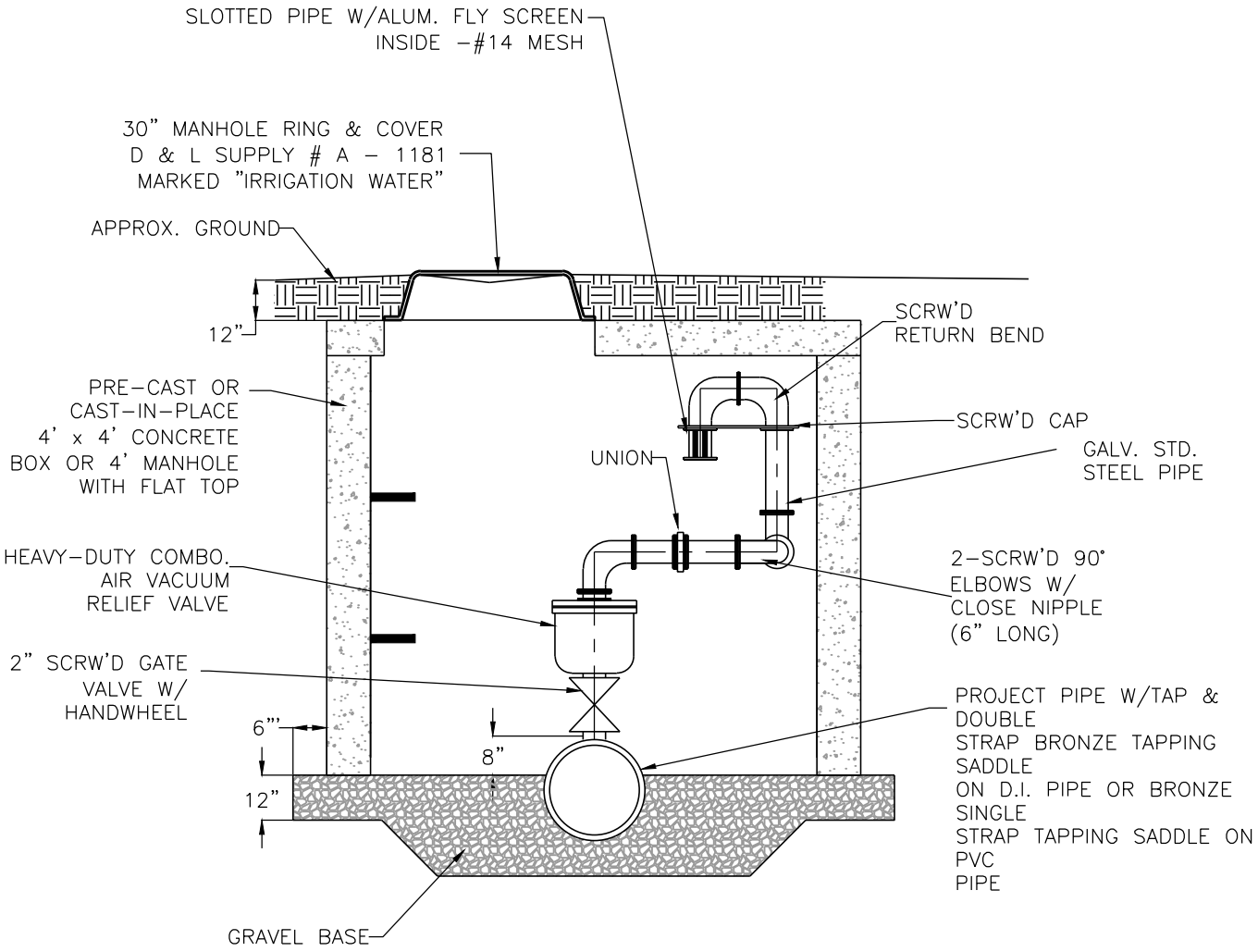

NOTE:

1. SIZE OF AIR–VACUUM RELIEF VALVE & PIPING SHALL BE AS DETERMINED BY PROJECT ENGINEER; AND APPROVED BY CITY ENGINEER.
2. LOCATE RISER IN LANDSCAPED AREA BEHIND CURB & GUTTER OR APPROX. 2 FT. FROM R/W LINE, AS DIRECTED BY CITY ENGINEER.
3. PROVIDE BOLLARDS OR OTHER PROTECTION FOR RISER IF AND AS DIRECTED BY CITY INSPECTOR.

AIR VACUUM RELIEF VALVE

DATE:	APRIL 2014
DRAWING NAME:	PI-8
DRAWN BY:	ETL
CHECKED:	APPROVED:

REVISIONS

REV	DATE	BY	COMMENTS

SARATOGA SPRINGS CITY

1307 N. COMMERCE DR.
#200, SARATOGA SPRINGS, UT 84045
PHONE: 801-766-9793
FAX: 8017669794

STANDARD DETAILS

SECONDARY WATER

PI-8

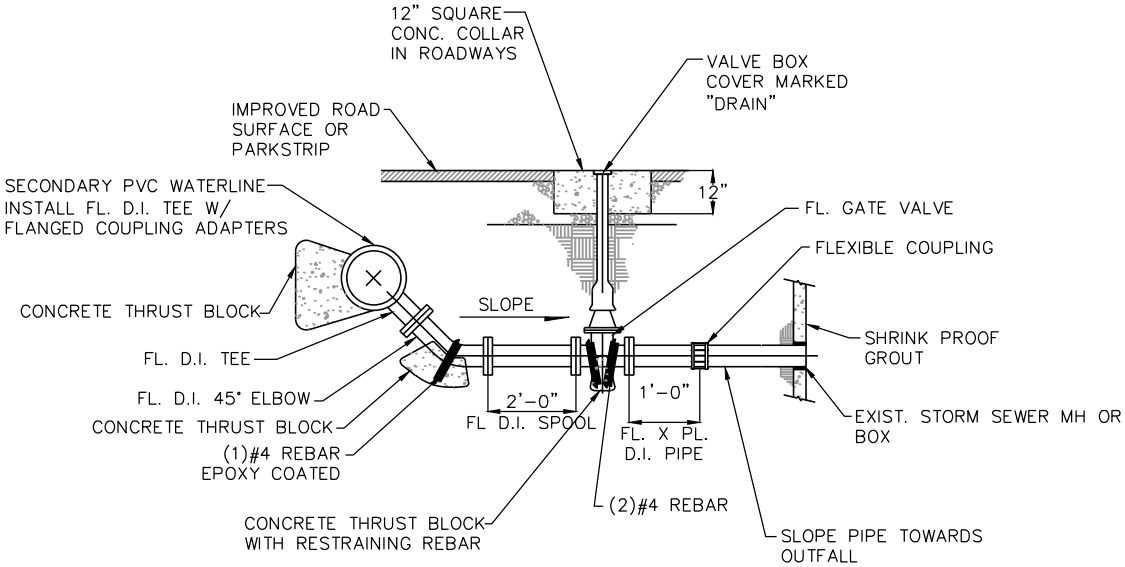

4" DRAIN VALVE DETAIL

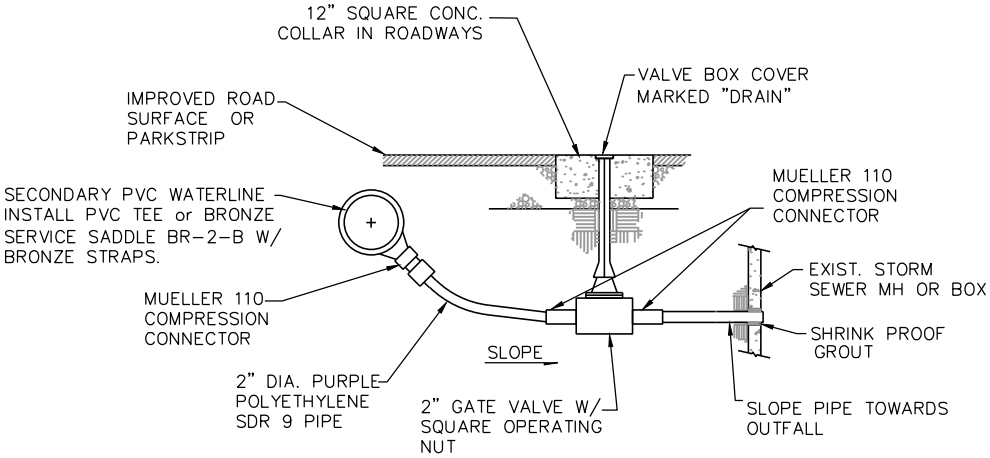

2" DRAIN VALVE DETAIL

NOTES:

1. USE 2" DRAINS ON 6" AND SMALLER PIPE LINES
2. USE 4" DRAINS ON 8" AND LARGER PIPE LINES
3. MARK "D" FOR DRAIN IN CONCRETE CURB

2" & 4" DRAIN VALVE	DATE: **APRIL 2014**	REVISIONS	STANDARD DETAILS
	DRAWING NAME: **PI-9**	REV / DATE / BY / COMMENTS	**SECONDARY WATER**
	DRAWN BY: **ETL**	SARATOGA SPRINGS CITY	**PI-9**
	CHECKED: / APPROVED:	1307 N. COMMERCE DR. #200, SARATOGA SPRINGS, UT 84045 PHONE: 801-766-9793 FAX: 8017669794	

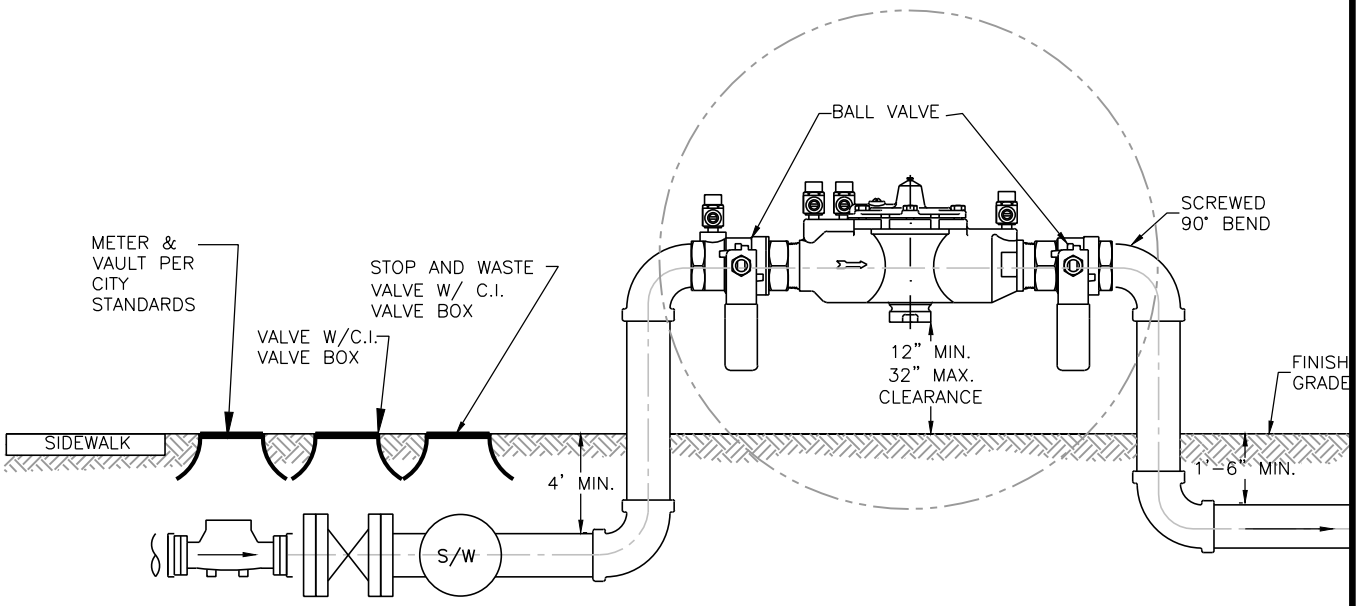

NOTES:

1. TO BE USED WHEN SECONDARY SERVICE IS CONNECTED TO THE CULINARY SYSTEM.
2. RPZ VALVE ASSEMBLY & PIPES TO MATCH SECONDARY LATERAL SIZE.
3. ABOVE GROUND FITTINGS TO BE EPOXY PAINTED.
   BLUE ON CULINARY SIDE, PURPLE ON SECONDARY SIDE
4. SHOP DRAWINGS TO BE SUBMITTED TO SARATOGA SPRINGS CITY ENGINEER FOR APPROVAL PRIOR TO SHIPMENT.
5. THE RPZ ASSEMBLY DETAIL SHALL BE VERIFIED PER MANUFACTURER RECOMMENDATIONS
6. PROVIDE BOLLARDS OR OTHER PROTECTION IF AND AS DIRECTED BY CITY INSPECTOR.

BACKFLOW PREVENTER FOR SERVICE LATERALS

DATE:	APRIL 2014
DRAWING NAME:	PI-10
DRAWN BY:	ETL
CHECKED:	APPROVED:

REVISIONS

REV	DATE	BY	COMMENTS

SARATOGA SPRINGS CITY

1307 N. COMMERCE DR.
#200, SARATOGA SPRINGS,
UT 84045
PHONE: 801-766-9793
FAX: 8017669794

STANDARD DETAILS

SECONDARY WATER

PI-10

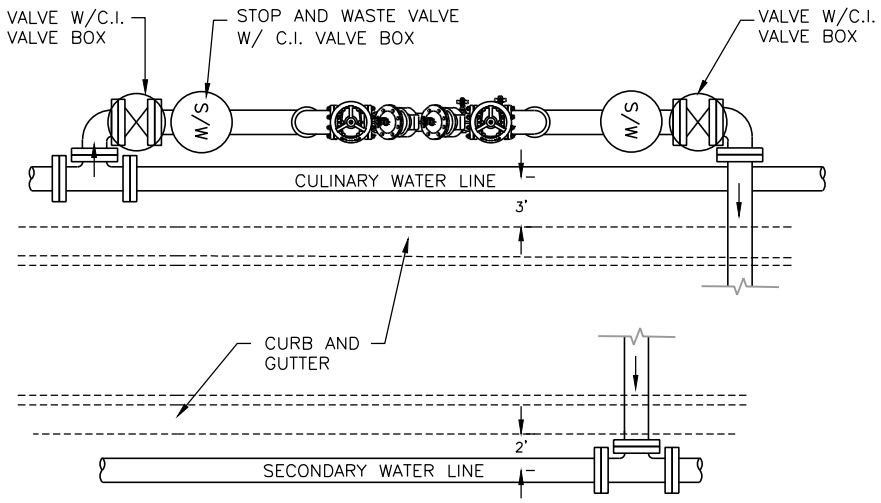

PLAN VIEW

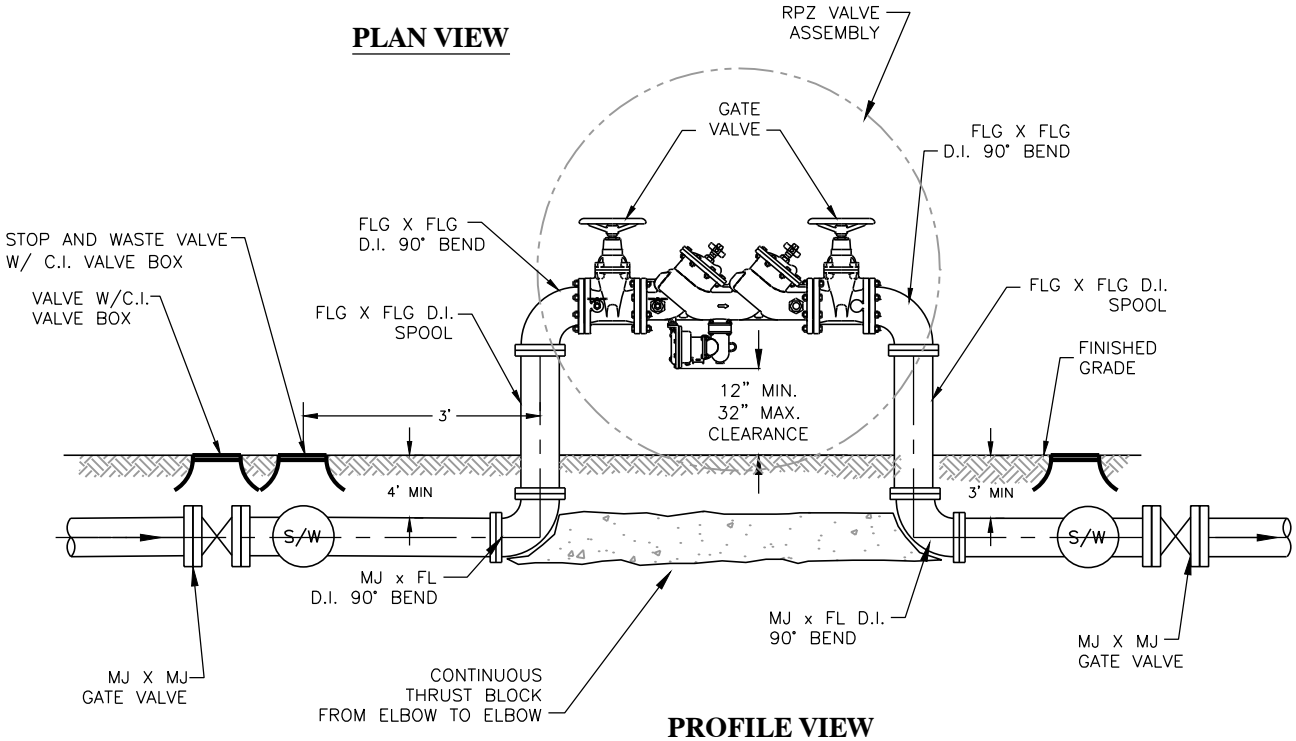

PROFILE VIEW

NOTES:

1. TO BE USED WHEN CHARGING THE SECONDARY SYSTEM WITH CULINARY WATER.
2. RPZ VALVE ASSEMBLY & PIPES TO MATCH SECONDARY MAIN SIZE.
3. ABOVE GROUND FITTINGS TO BE EPOXY PAINTED. BLUE ON CULINARY SIDE, PURPLE ON SECONDARY SIDE
4. SHOP DRAWINGS TO BE SUBMITTED TO SARATOGA SPRINGS CITY ENGINEER FOR APPROVAL PRIOR TO SHIPMENT.
5. THE RPZ ASSEMBLY SHALL BE VERIFIED PER MANUFACTURERS RECOMMENDATIONS.
6. PROVIDE BOLLARDS OR OTHER PROTECTION IF AND AS DIRECTED BY CITY INSPECTOR.

RPZ BACKFLOW PREVENTER FOR WATER MAINS

DATE:	APRIL 2014
DRAWING NAME:	PI-11
DRAWN BY:	ETL
CHECKED:	APPROVED:

REVISIONS

REV	DATE	BY	COMMENTS

SARATOGA SPRINGS CITY

1307 N. COMMERCE DR.
#200, SARATOGA SPRINGS,
UT 84045
PHONE: 801-766-9793
FAX: 8017669794

STANDARD DETAILS

SECONDARY WATER

PI-11

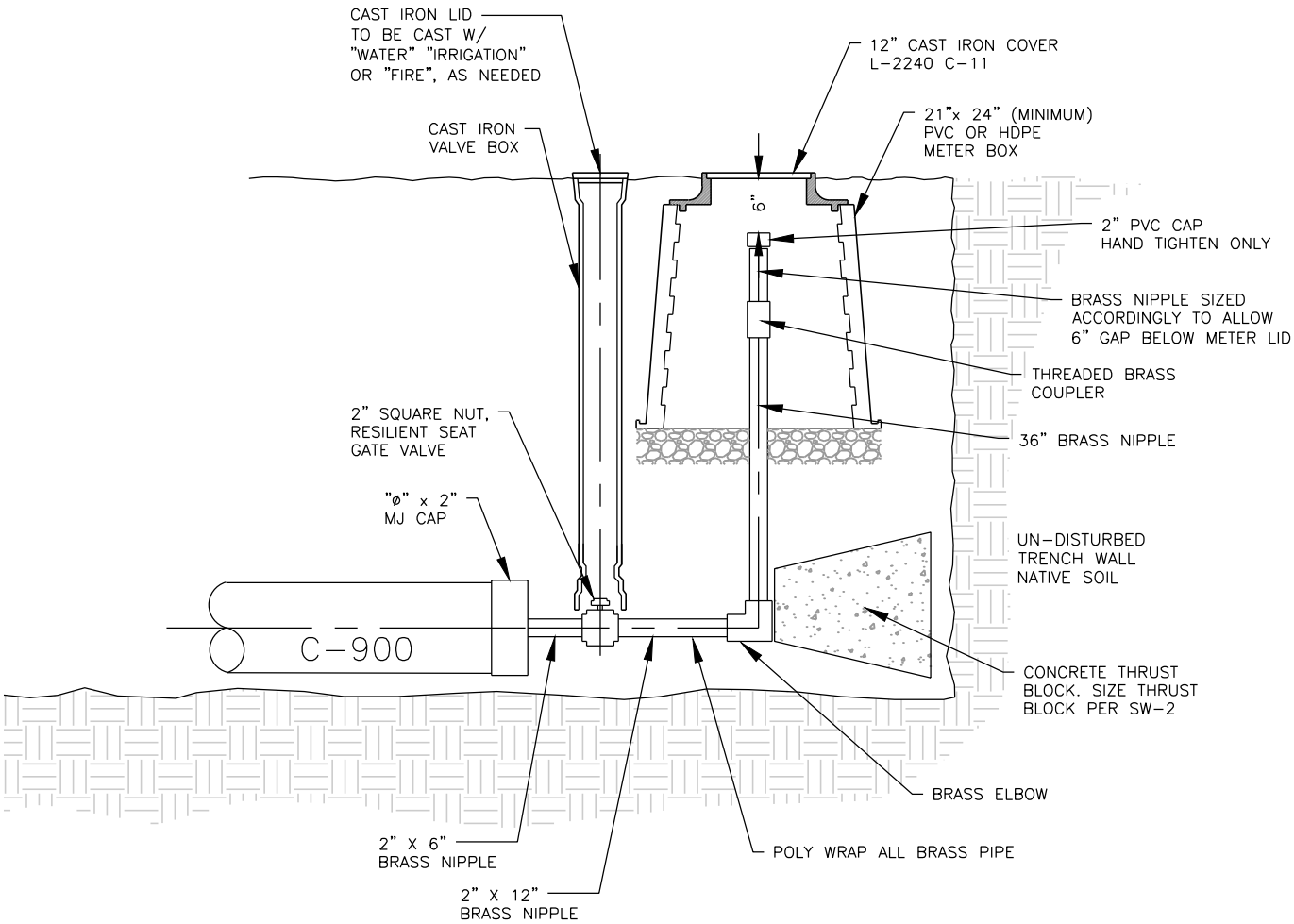

2 INCH BLOW-OFF VALVE

DATE:	APRIL 2014
DRAWING NAME:	PI-12
DRAWN BY:	ETL
CHECKED:	APPROVED:

REVISIONS

REV	DATE	BY	COMMENTS

SARATOGA SPRINGS CITY

1307 N. COMMERCE DR.
#200, SARATOGA SPRINGS,
UT 84045
PHONE: 801-766-9793
FAX: 8017669794

STANDARD DETAILS

SECONDARY WATER

PI-12

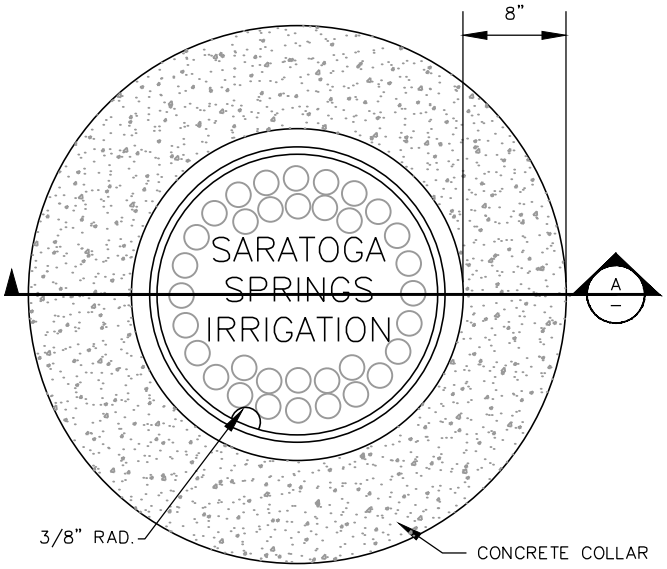

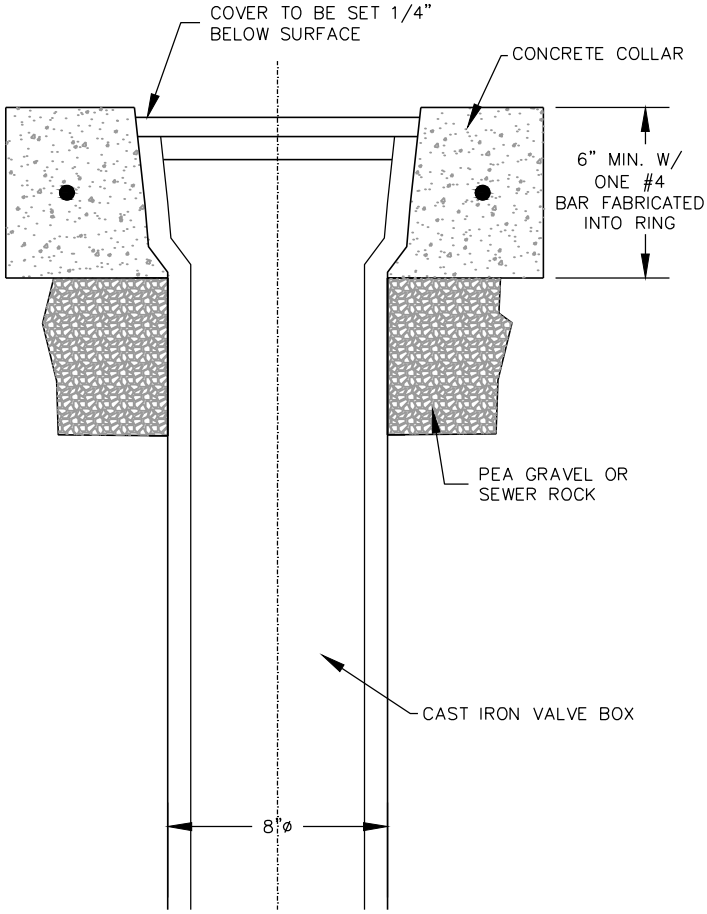

NOTES:

1. ALL WORK SHALL CONFORM TO APWA STANDARDS UNLESS OTHERWISE APPROVED BY CITY ENGINEER

CONCRETE COLLAR

DATE:	APRIL 2014
DRAWING NAME:	CW-15
DRAWN BY:	ETL
CHECKED:	APPROVED:

REVISIONS

REV	DATE	BY	COMMENTS

SARATOGA SPRINGS CITY

1307 N. COMMERCE DR.
#200, SARATOGA SPRINGS,
UT 84045
PHONE: 801-766-9793
FAX: 8017669794

STANDARD DETAILS

STREET STANDARDS

CW-15

STANDARD STREET IMPROVEMENT DETAILS

INDEX:

ST-1 SIDEWALK AND CURB & GUTTER STANDARDS
ST-2 CURB & GUTTER DETAILS
ST-3 WATERWAY DETAIL
ST-4 FLARE DRIVE APPROACH
ST-5A-E HANDICAP ACCESSIBLE RAMP
ST-6 DEFECTIVE CONCRETE REPLACEMENT CRITERIA
ST-7 STANDARD INTERSECTION & UTILITY DETAIL
ST-8 RESIDENTIAL ROADWAY- 56' RIGHT-OF-WAY
ST-9 COLLECTOR- 77' RIGHT-OF-WAY
ST-10 MINOR ARTERIAL- 95' RIGHT-OF-WAY
ST-11 MAJOR ARTERIAL - 180' RIGHT-OF-WAY
ST-12 PRINCIPAL ARTERIAL - 180' RIGHT-OF-WAY
ST-13 INTERIM ARTERIAL - 180' RIGHT-OF-WAY
ST-14 STANDARD TEMPORARY TURN-AROUND
ST-15A 8' WIDE TRAIL STANDARDS
ST-15B 8' WIDE TRAIL STANDARDS FOR INTERIM ROADS
ST-16 STANDARD CUL-DE-SAC
ST-17 ROUNDABOUT: RESIDENTIAL ROADWAY- 56' RIGHT-OF-WAY
ST-18 ROUNDABOUT: MINOR COLLECTOR- 77' RIGHT-OF-WAY
ST-19 ROUNDABOUT: MAJOR COLLECTOR- 95' RIGHT-OF-WAY
ST-20 ROUNDABOUT: MAJOR ARTERIAL ROADWAY- 180' RIGHT-OF-WAY
ST-21 ROUNDABOUT: TYPICAL CROSS SECTIONS
ST-22 SPEED TABLE DETAIL
ST-23 56' ROW NECKED INTERSECTION DETAIL
ST-24 77' ROW NECKED INTERSECTION DETAIL
ST-25 95' ROW NECKED INTERSECTION DETAIL
ST-26 STANDARD TEE PATCH
ST-27 UTILITY MARKERS DETAIL
ST-28 STREET AND REGULATORY SIGN DETAIL
ST-29 SURVEY MONUMENT DETAIL
ST-30 PRIVATE ROADWAY: W/O PARK STRIP-40' RIGHT-OF-WAY
ST-31 PRIVATE ROADWAY: W/ PARK STRIP-48' RIGHT-OF-WAY
ST-32 PRIVATE ROADWAY: RURAL-56' RIGHT-OF-WAY
ST-33 STANDARD INTERSECTION & UTILITY DETAILS
ST-34 URBAN, RURAL, AND WILDERNESS TRAILS

STREET IMPROVEMENT DETAILS

DATE: APRIL 2014
DRAWING NAME: ST-0
DRAWN BY: ETL
CHECKED: APPROVED:

REVISIONS

REV	DATE	BY	COMMENTS

SARATOGA SPRINGS CITY

1307 N. COMMERCE DR.
#200, SARATOGA SPRINGS,
UT 84045
PHONE: 801-766-9793
FAX: 8017669794

STANDARD DETAILS

STREET STANDARDS

ST-0

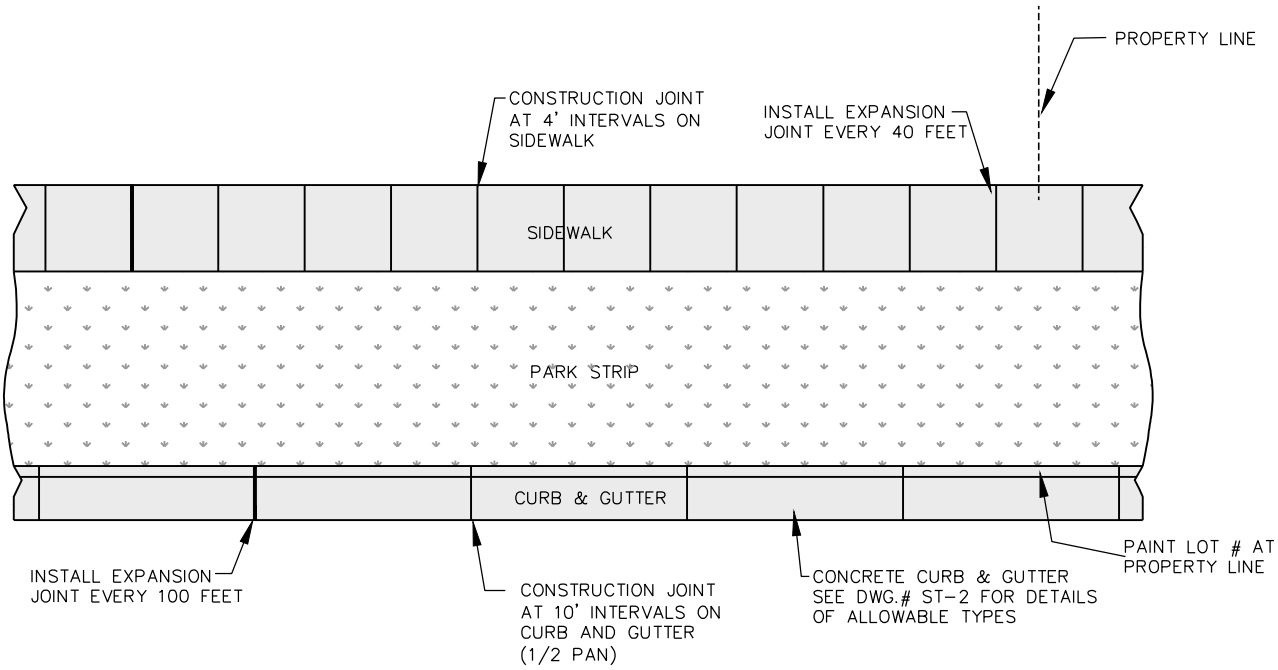

PLAN VIEW

NOTES:

1. A MINIMUM 6" DEPTH OF ROADBASE MATERIAL SHALL BE PLACED TO GRADE AND COMPACTED TO 95% OF MAXIMUM DRY DENSITY UNDER DRIVEWAY, WATERWAY, AND CURB & GUTTER PRIOR TO PLACEMENT OF CONCRETE.

2. A MINIMUM 6" DEPTH OF ROADBASE MATERIAL SHALL BE PLACED TO GRADE AND COMPACTED TO 95% OF MAXIMUM DRY DENSITY UNDER SIDEWALK AT ALL OTHER LOCATIONS PRIOR TO PLACEMENT OF CONCRETE.

3. WHERE CONSTRUCTION IS ADJACENT TO STATE HIGHWAY FRONTAGE, STATE HIGHWAY DEPARTMENT REQUIREMENTS SHALL GOVERN.

4. CONCRETE SHALL BE 3/4 INCH MAXIMUM AGGREGATE, 6.3 BAGS PER YARD OF TYPE 2 CEMENT WITH A MINIMUM COMMPRESSIVE STRENGTH OF 4,000 PSI AT 28 DAYS.

5. EXPANSION JOINTS FOR CURB & GUTTER ARE TO BE SPACED NO MORE THAN 100 FT. AND SIDEWALKS SHALL BE SPACED NO MORE THAN EVERY 40 FT. EXPANSION JOINTS SHALL BE CONSTRUCTED BY PLACING AN APPROVED MATERIAL, (TYPICALLY BITUMINOUS IMPREGNATED FIBERBOARD), THE FULL DEPTH OF THE CONCRETE. EXPANSION MATERIAL SHALL BE SET 1/2" BELOW THE FINISH LEVEL OF THE SIDEWALK.

6. CONSTRUCTION JOINT IS MADE BY SCORING THE CONCRETE WITH 1/2" RADIUS EDGING TOOL OR OTHER METHOD APPROVED BY ENGINEER.

7. SLOPE SIDEWALK TO ROADWAY AT 2% GRADE.

8. LOCATE ALL INLET GRATES 2' MINIMUM AWAY FROM THE PEDESTRIAN CROSSWALK, WITH ALL DRAINAGE INTERCEPTED BEFORE IT GETS TO THE CROSSWALK AREA.

9. THE SIDEWALK SHALL BE A MIN. 5" THICK CONCRETE.

10. IN ROCKY SUB-GRADES 18" OF BOTTOM OF TRENCH TO BOTTOM OF PIPE. MIN. OF 2' OF OUTSIDE DIAMETER.

11. INSTALL MAGNETIC DETECTOR TAPE WITH A MIN. OF 14 GAUGE COATED TRACER WIRE FOR ALL PVC OR OTHER PIPE.

12. PAINT LOT NUMBER AT PROPERTY LINE.

13. SEWER LATERAL LOCATIONS TO BE MARKED ON TOP OF CURB WITH AN S

14. CULINARY WATER LATERAL LOCATIONS TO BE MARKED ON TOP OF CURB WITH A W

15. SECONDARY WATER LATERAL LOCATIONS TO BE MARKED ON TOP OF CURB WITH AN I

16. WATER VALVE LOCATIONS TO BE MARKED ON TOP OF CURB WITH A V

SIDEWALK, CURB & GUTTER STANDARDS

DATE:	APRIL 2014
DRAWING NAME:	ST-1
DRAWN BY:	ETL
CHECKED:	APPROVED:

REVISIONS

REV	DATE	BY	COMMENTS

SARATOGA SPRINGS CITY

1307 N. COMMERCE DR.
#200, SARATOGA SPRINGS,
UT 84045
PHONE: 801-766-9793
FAX: 8017669794

STANDARD DETAILS

STREET STANDARDS

ST-1

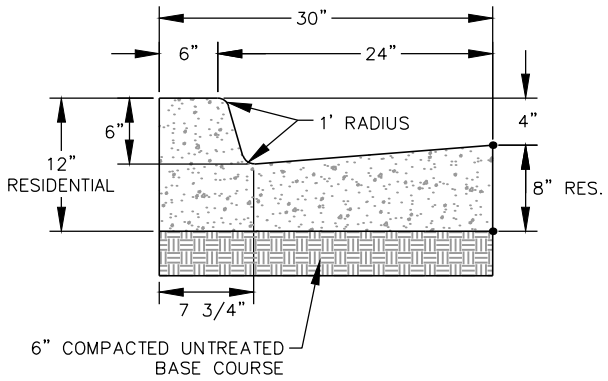

RESIDENTIAL
30" HIGH BACK CURB AND GUTTER
FOR USE ON ARTERIALS & COLLECTORS

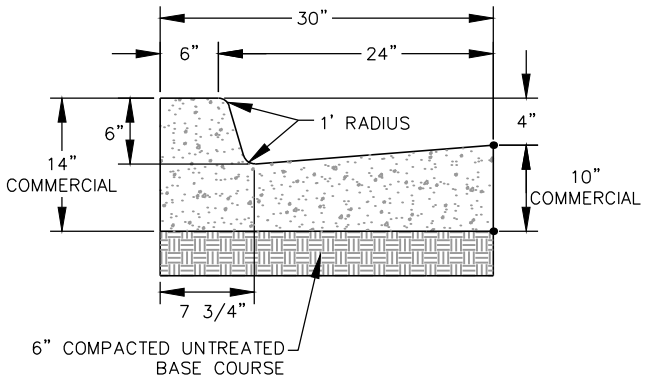

COMMERCIAL
30" HIGH BACK CURB AND GUTTER
FOR USE ON ARTERIALS & COLLECTORS

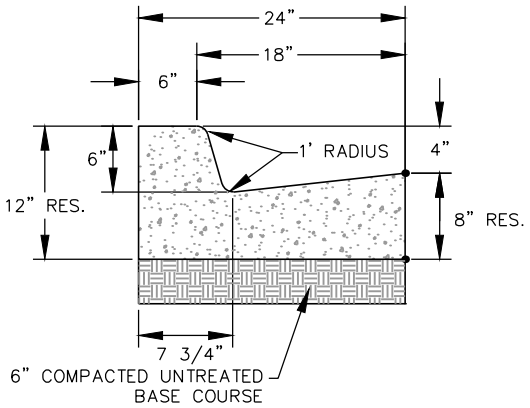

RESIDENTIAL
24" HIGH BACK CURB AND GUTTER
FOR USE IN LOCAL & MINOR COLLECTORS

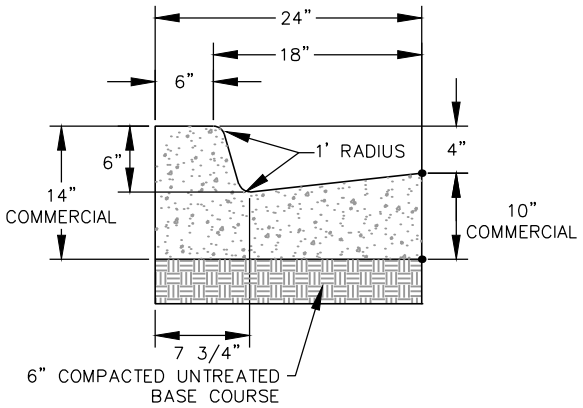

COMMERCIAL
24" HIGH BACK CURB AND GUTTER
FOR USE IN LOCAL & MINOR COLLECTORS

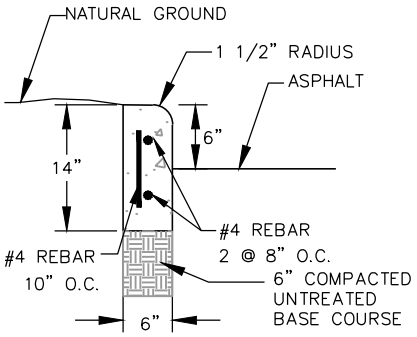

6" CURB WALL

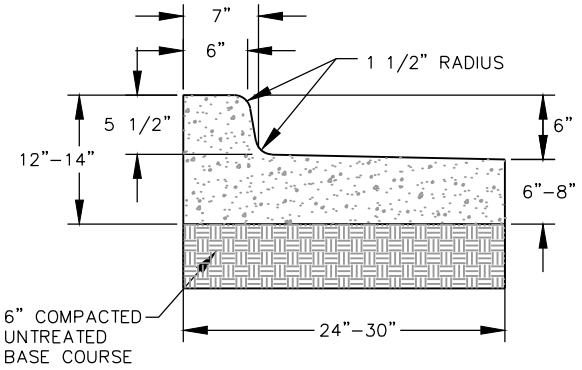

FALL-OUT CURB AND GUTTER

CURB & GUTTER DETAILS

DATE:	APRIL 2014
DRAWING NAME:	ST-2
DRAWN BY:	ELT
CHECKED:	APPROVED:

REVISIONS

REV	DATE	BY	COMMENTS

SARATOGA SPRINGS CITY

1307 N. COMMERCE DR.
#200, SARATOGA SPRINGS,
UT 84045
PHONE: 801-766-9793
FAX: 8017669794

STANDARD DETAILS

STREET STANDARDS

ST-2

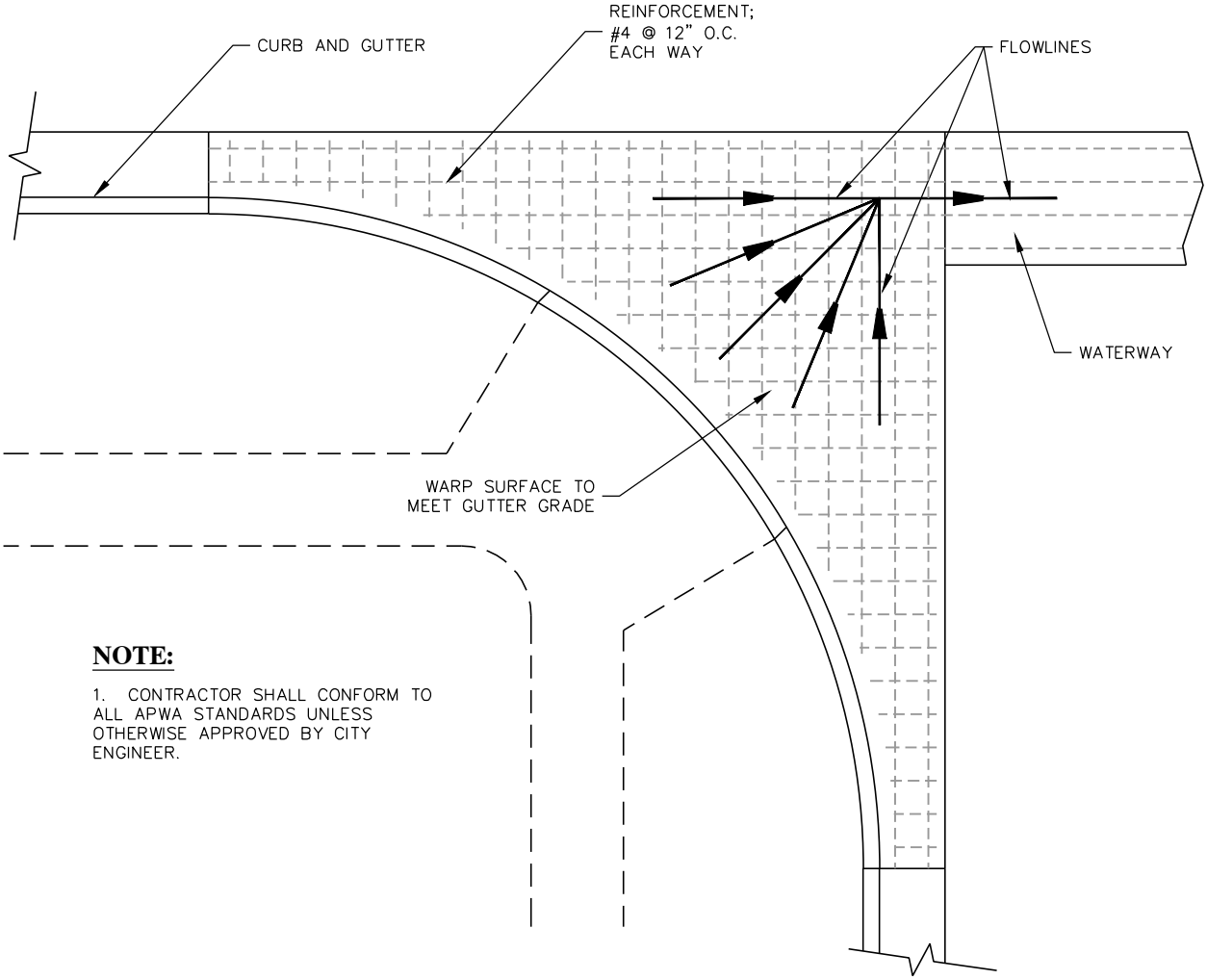

NOTE:

1. CONTRACTOR SHALL CONFORM TO ALL APWA STANDARDS UNLESS OTHERWISE APPROVED BY CITY ENGINEER.

PLAN VIEW

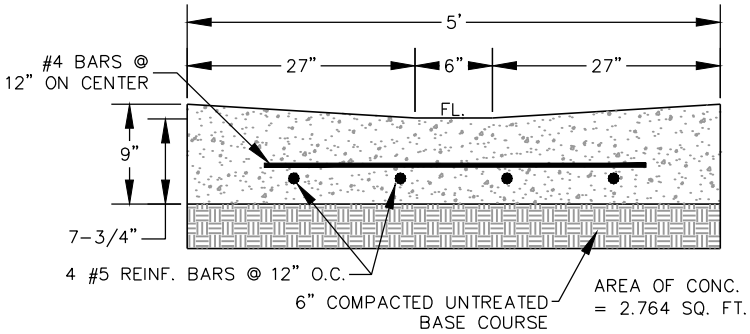

WATERWAY

WATERWAY DETAIL

DATE:	FEBRUARY 2013
DRAWING NAME:	ST-3
DRAWN BY:	ETL
CHECKED:	APPROVED:

REVISIONS

REV	DATE	BY	COMMENTS

SARATOGA SPRINGS CITY

1307 N. COMMERCE DR.
#200, SARATOGA SPRINGS,
UT 84045
PHONE: 801-766-9793
FAX: 8017669794

STANDARD DETAILS

STREET STANDARDS

ST-3

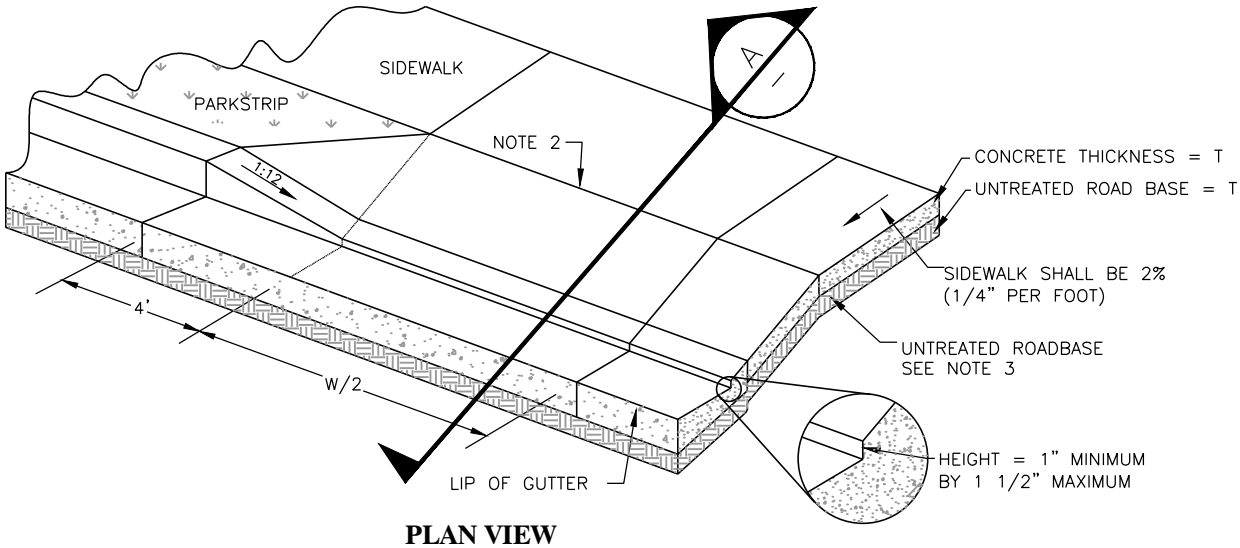

PLAN VIEW

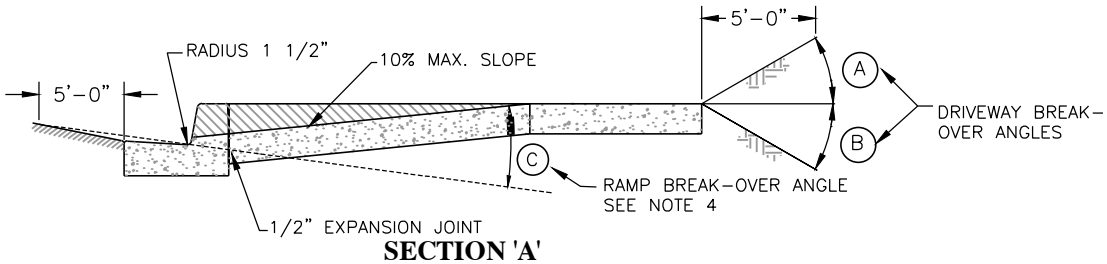

SECTION 'A'

NOTES:

1. EDGE CONCRETE WITH 1/2" RADIUS EDGING TOOL.

2. PLACE 1/2" EXPANSION JOINT BETWEEN DRIVEWAY APRON AND CURB AND IN THE DRIVEWAY CENTERLINE IF "W" IS GREATER THAN 20'. FILLER MATERIAL SHALL BE FULL DEPTH OF CONCRETE PLUS 1", WITH TOP SET FLUSH WITH TOP OF CONCRETE.

3. USE UNTREATED ROADBASE UNDER CURB, GUTTER AND SIDEWALK. COMPACT TO 95% OF THE MAXIMUM DRY DENISTY.

4. DIFFERENCE IN SLOPE OF DRIVEWAY RAMP AND THE SLOPE OF A LINE BETWEEN THE GUTTER AND A POINT ON THE ROADWAY 5' FROM THE FRONT EDGE OF THE GUTTER SHALL NOT EXCEED 15%. REDUCE DRIVEWAY RAMP SLOPE, NOT GUTTER SLOPE, WHERE REQUIRED.

5. ALL CONCRETE SLABS WITH A LENGTH/WIDTH RATIO GREATER THAN 2:1 SHALL HAVE CONTRACTION JOINTS INSTALLED AS REQUIRED TO STAY WITHIN 2:1 RATIO.

6. BACK EDGE OF SIDEWALK TO BE SET AT AN ELEVATION 2% HIGHER THAN THE TOP BACK OF CURB.

7. SIDEWALK TO BE A MINIMUM OF 5 FEET WIDE UNLESS OTHERWISE SPECIFIED.

8. MATERIALS, CONSTRUCTION, AND WORKMANSHIP SHALL BE IN ACCORDANCE WITH CITY'S STANDARD SPECIFICATIONS.

DRIVE APPROACH DIMENSIONS

DIMENSION	LEGNTH ACCORDING TO ZONE
W	10'-0" MIN. RESIDENTIAL ZONES 20'-0" MAX. RESIDENTIAL ZONES 30'-0" MAX. COMMERCIAL/INDUSTRIAL ZONES
T	0'-6" RESIDENTIAL ZONES 0'-8" INDUSTUSTRIAL/COMMERCIAL ZONES

SLOPE TABLE

DIMENSION	ZONE
(A) 12% MAX. 6% MAX.	RESIDENTIAL ZONE INDUST. AND COMM. ZONE
(B) 13% MAX. 6% MAX.	RESIDENTIAL ZONE INDUST. AND COMM. ZONE
(C) 15% MAX. 6% MAX.	RESIDENTIAL ZONE INDUST. AND COMM. ZONE

FLARE DRIVE APPROACH

DATE:	APRIL 2014
DRAWING NAME:	ST-4
DRAWN BY:	ETL
CHECKED:	APPROVED:

REVISIONS

REV	DATE	BY	COMMENTS

SARATOGA SPRINGS CITY

1307 N. COMMERCE DR.
#200, SARATOGA SPRINGS,
UT 84045
PHONE: 801-766-9793
FAX: 8017669794

STANDARD DETAILS

STREET STANDARDS

ST-4

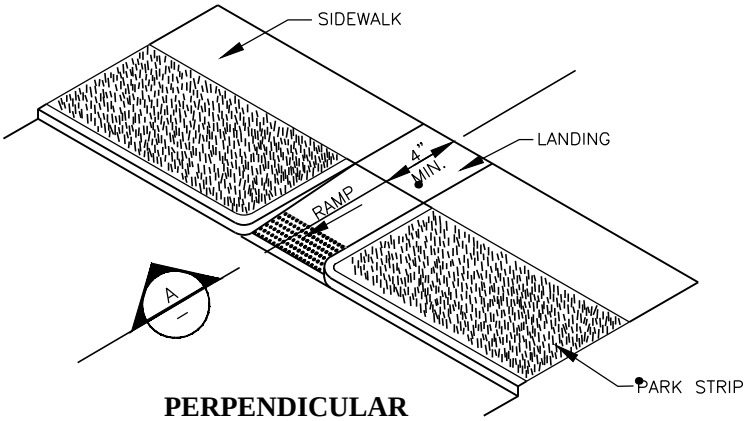

NOTE:

SIDEWALK SLOPES STEEPER THAN 8.3% SHOULD BE GIVEN CONSIDERATION FOR THE GRADE CHANGE TO BE COMPLIANT WITH ADA STANDARDS

PERPENDICULAR PEDESTRIAN RAMP

FLARE IS ACCEPTABLE IN LIEU OF FULL HEIGHT CURB SEE LOCAL AGENCY REQUIREMENTS

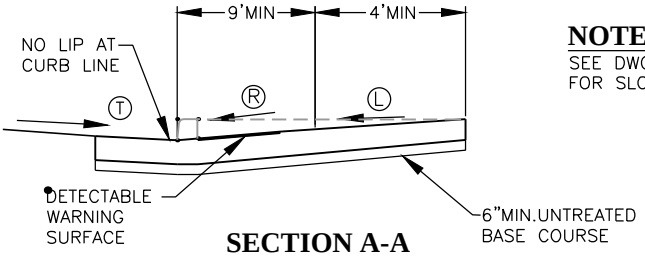

NOTE:

SEE DWG ST-5A FOR SLOPE DETAIL

SECTION A-A

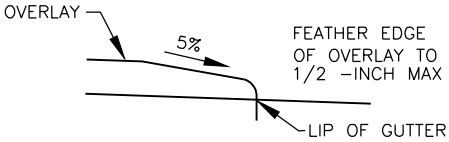

TRANSITION DETAIL

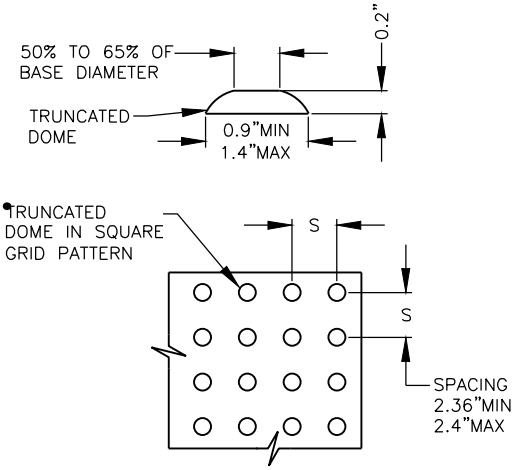

DETECTABLE WARNING SURFACE DETAIL A

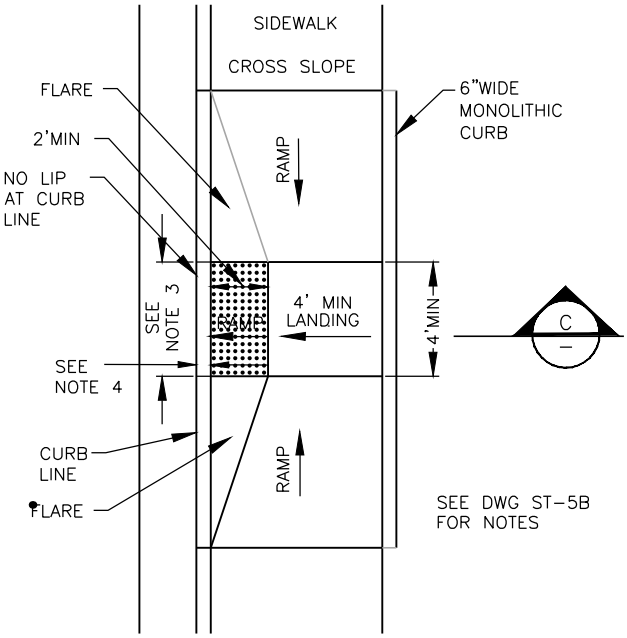

PEDESTRIAN ACCESS RAMP DETAIL

HANDICAP ACCESSILE RAMP

DATE:	APRIL 2014
DRAWING NAME:	ST-5A
DRAWN BY:	ETL
CHECKED:	APPROVED:

REVISIONS

REV	DATE	BY	COMMENTS

SARATOGA SPRINGS CITY

1307 N. COMMERCE DR. #200, SARATOGA SPRINGS, UT 84045
PHONE: 801-766-9793
FAX: 8017669794

STANDARD DETAILS

STREET STANDARDS

ST-5A

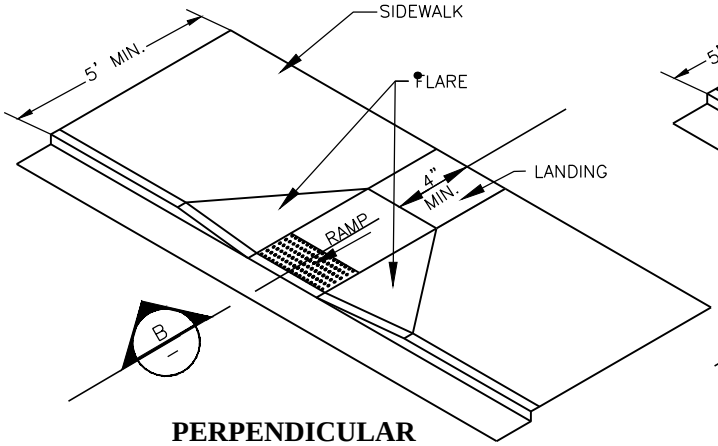

PERPENDICULAR PEDESTRIAN RAMP

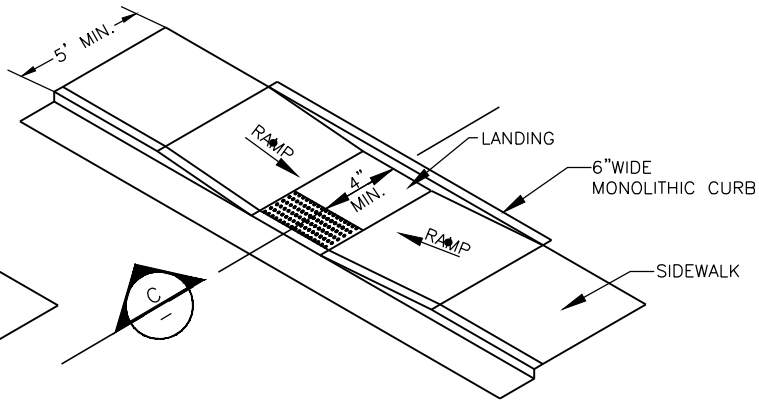

PARALLEL PEDESTRIAN RAMP

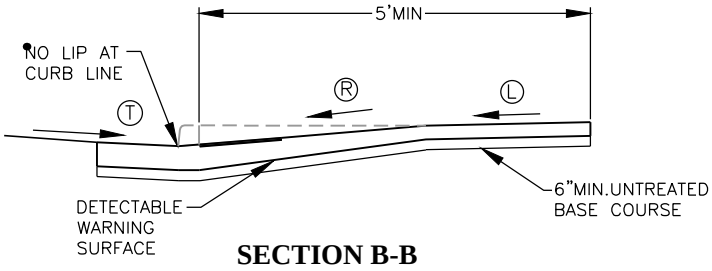

SECTION B-B

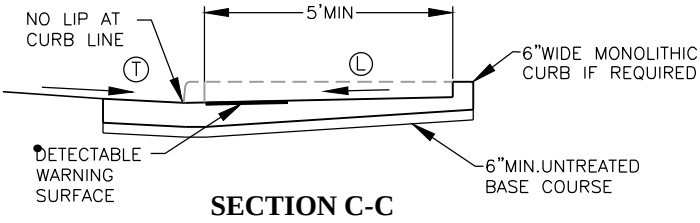

SECTION C-C

SLOPE TABLE

	ITEM	MAX. RUNNING SLOPE *	MAX. CROSS SLOPE *
L	LANDING	2% (1V:48H) (b)	2% (1V:48H) (b)
R	RAMP	8.33% (1V:12H) (c)	2% (1V:48H) (d)
T	TRANSITION	5% (1V:20H) (a)	2% (1V:48H) (d)
	SIDEWALK	--	2% (1V:48H)
	FLARE	10% (1V:10H)	--

* RUNNING SLOPE IS IN THE DIRECTION OF PEDESTRIAN TRAVEL, WHILE CROSS SLOPE IS PERPENDICULAR TO PEDESTRIAN TRAVEL.

(a) TRANSITION RUNNING SLOPE NEEDS TO BE CONSTANT ACROSS ENTIRE CURB CUT. WARP GUTTER PAN TO MEET REQUIRED TRANSITION SLOPE AT CURB CUT.

EXCEPTION:
(b) SLOPE REQUIREMENTS DO NOT APPLY AT MID-BLOCK CROSSINGS.

(c) PARALLEL RAMPS ARE NOT REQUIRED TO EXCEED 15-FEET IN LENGTH.

(d) CROSS SLOPE REQUIREMENT DOES NOT APPLY AT PERPENDICULAR RAMP MID-BLOCK CROSSING.

NOTES:

1. CONFIGURATION OF RAMPS AND LANDINGS MAY BE CHANGED BUT MUST MEET PEDESTRIAN RAMP DIMENSION AND SLOPE REQUIREMENTS. SPECIFIC SITE CONDITIONS WILL VARY. THE USE OF FLARES, CURBWALLS, ETC. ARE AT THE DISCRETION OF THE ENGINEER.
2. PERPENDICULAR AND PARALLEL PEDESTRIAN RAMPS SHOWN ON THIS DRAWING ARE ACCEPTABLE FOR USE AT MID BLOCK OR CORNER INSTALLATIONS. REFER TO STD DWG ST 5C, 5D AND ST 5C FOR EXAMPLES OF CORNER INSTALLATIONS.
3. PROVIDE DETECTABLE WARNING SURFACE FOR FULL WIDTH OF RAMP, LANDING, OR CURB CUT. SEE DETAIL A, DWG 5A, FOR DETECTABLE WARNING SURFACE DIMENSIONS.
4. LOCATE DETECTABLE WARNING SURFACE SO THAT THE EDGE NEAREST THE STREET IS 6" TO 8" FROM THE CURB LINE.
5. PROVIDE DETECTABLE WARNING SURFACE THAT CONTRASTS WITH ADJACENT WALKING SURFACE, EITHER LIGHT-ON-DARK OR DARK-ON-LIGHT. ACCEPTABLE COLORS INCLUDE: YELLOW.
6. USE CLASS AA(AE) CONCRETE.
7. USE UNTREATED BASE COURSE UNDER ALL CONCRETE FLATWORK.

HANDICAP ACCESSIBLE RAMP

DATE: APRIL 2014
DRAWING NAME: ST-5B
DRAWN BY: ETL
CHECKED:
APPROVED:

REVISIONS

REV	DATE	BY	COMMENTS

SARATOGA SPRINGS CITY

1307 N. COMMERCE DR.
#200, SARATOGA SPRINGS, UT 84045
PHONE: 801-766-9793
FAX: 8017669794

STANDARD DETAILS

STREET STANDARDS

ST-5B

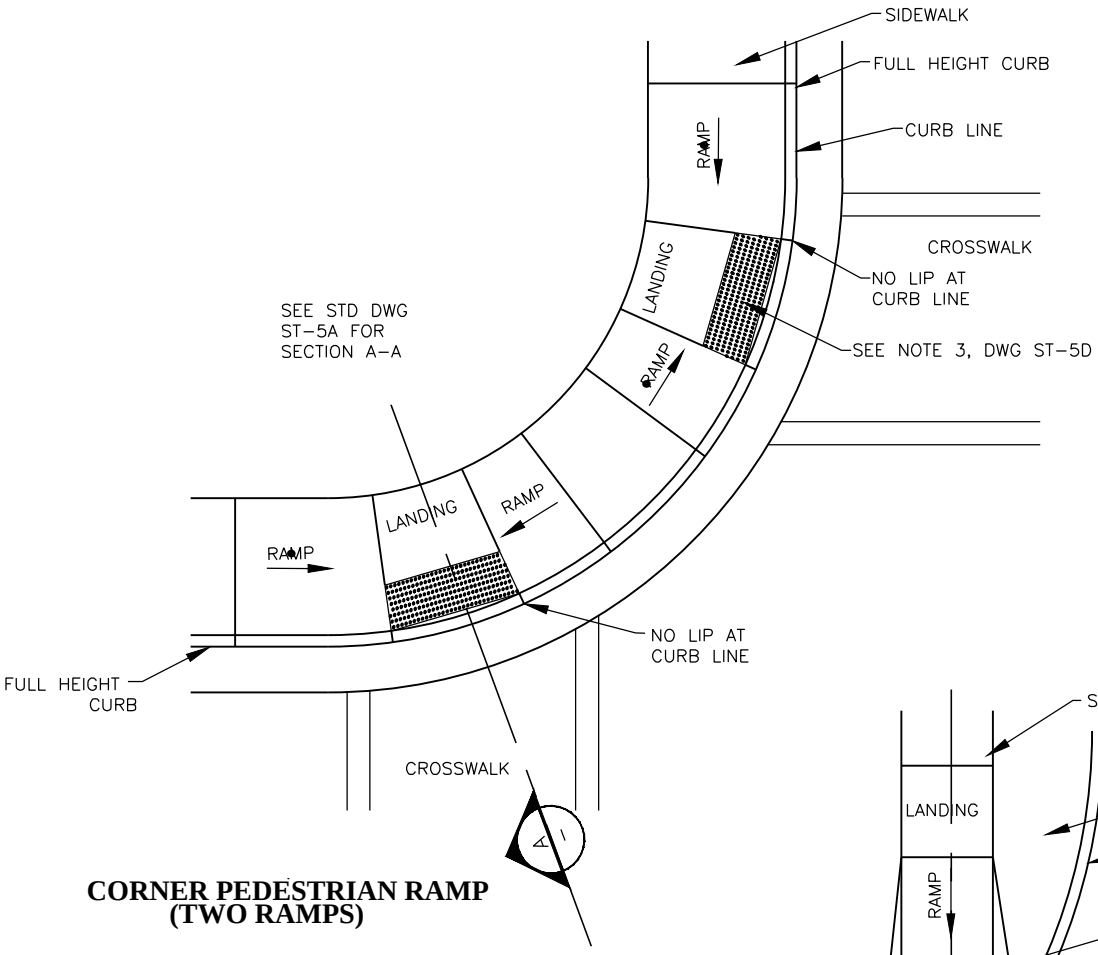

CORNER PEDESTRIAN RAMP (TWO RAMPS)

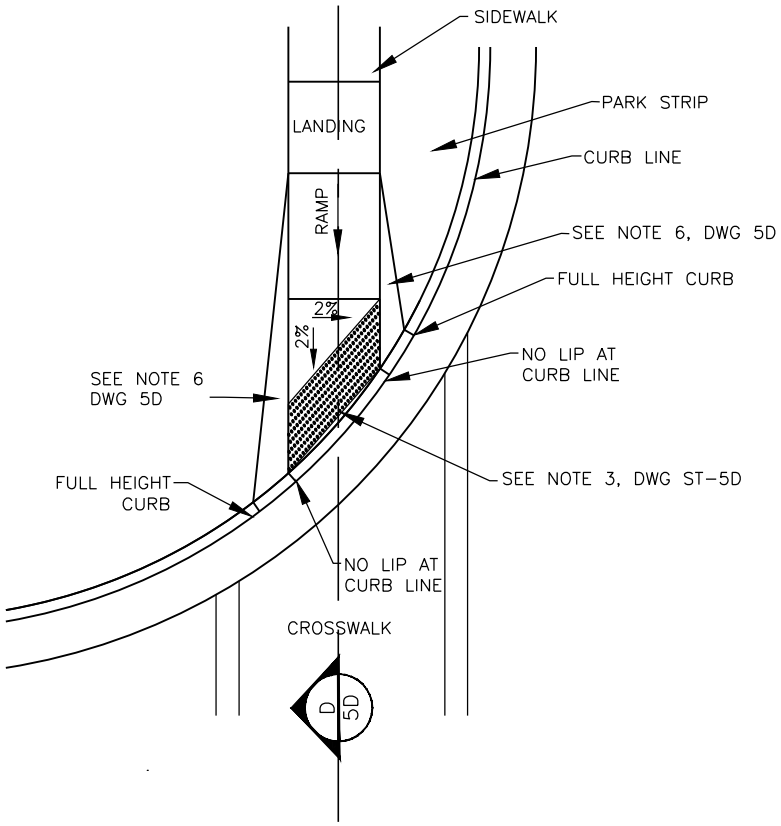

CORNER PEDESTRIAN RAMP

HANDICAP ACCESSIBLE RAMP

DATE:	APRIL 2014
DRAWING NAME:	ST-5C
DRAWN BY:	ETL
CHECKED:	APPROVED:

REVISIONS

REV	DATE	BY	COMMENTS

SARATOGA SPRINGS CITY

1307 N. COMMERCE DR.
#200, SARATOGA SPRINGS,
UT 84045
PHONE: 801-766-9793
FAX: 8017669794

STANDARD DETAILS

STREET STANDARDS

ST-5C

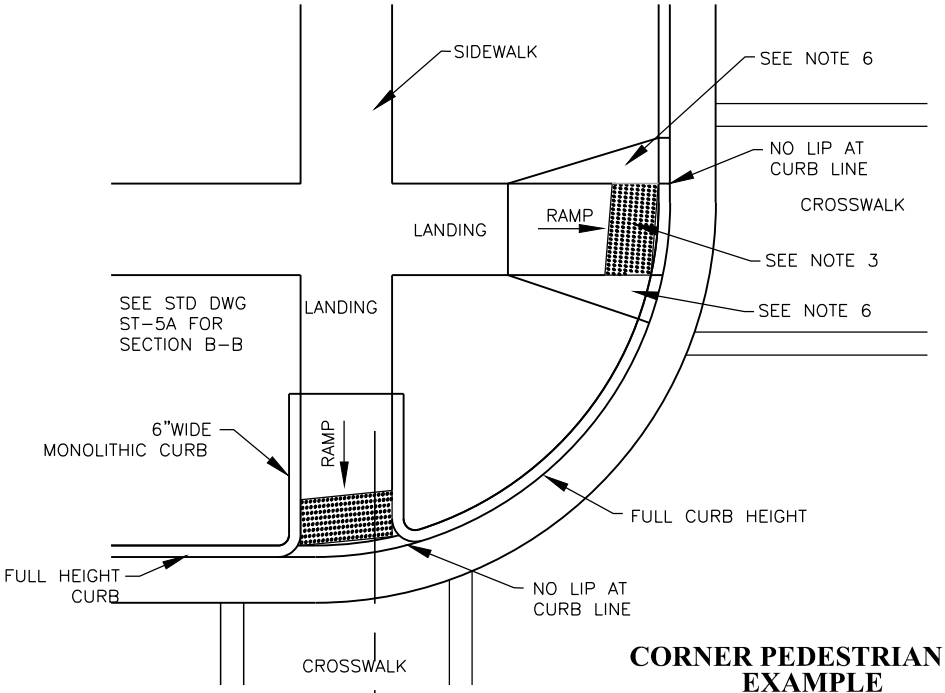

CORNER PEDESTRIAN RAMP EXAMPLE (TWO RAMPS)

FLARE IS ACCEPTABLE IN
LIEU OF FULL HEIGHT CURB
SEE LOCAL AGENCY REQUIREMENTS

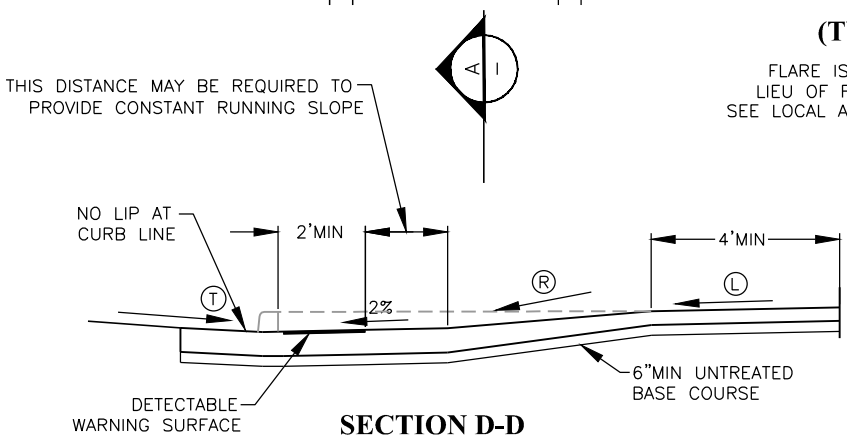

SECTION D-D

NOTES:

1. REFER TO STD DWG ST-5A FOR PEDESTRIAN ACCESS RAMP DETAIL AND SLOPE REQUIREMENTS.
2. PROVIDE DETECTABLE WARNING SURFACE FOR FULL WIDTH OF RAMP, LANDING, OR CURB CUT. SEE DETAIL A ON STD DWG ST-5A FOR DETECTABLE WARNING SURFACE DIMENSIONS.
3. LOCATE DETECTABLE WARNING SURFACE SO THAT THE EDGE NEAREST THE STREET IS 6" TO 8" FROM THE CURB LINE.
4. WHEN DETECTABLE WARNING SURFACE IS CUT, GRIND REMAINING PORTION OF ANY CUT DOMES. SEAL ALL CUT PANEL EDGES TO PREVENT WATER DAMAGE.
5. LOCATE CURB CUT WITHIN CROSSWALK.
6. WARP FLATWORK TO MATCH TOP OF CURB AND SIDEWALK.

HANDICAP ACCESSIBLE RAMP

DATE:	APRIL 2014
DRAWING NAME:	ST-5D
DRAWN BY:	ELT
CHECKED:	APPROVED:

REVISIONS

REV	DATE	BY	COMMENTS

SARATOGA SPRINGS CITY

1307 N. COMMERCE DR.
#200, SARATOGA SPRINGS,
UT 84045
PHONE: 801-766-9793
FAX: 8017669794

STANDARD DETAILS

STREET STANDARDS

ST-5D

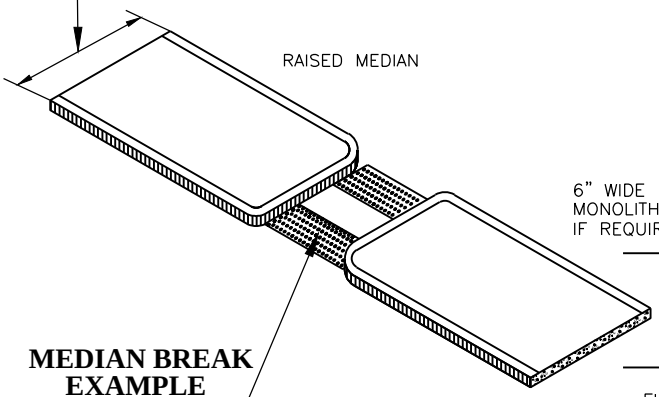

MEDIAN BREAK EXAMPLE

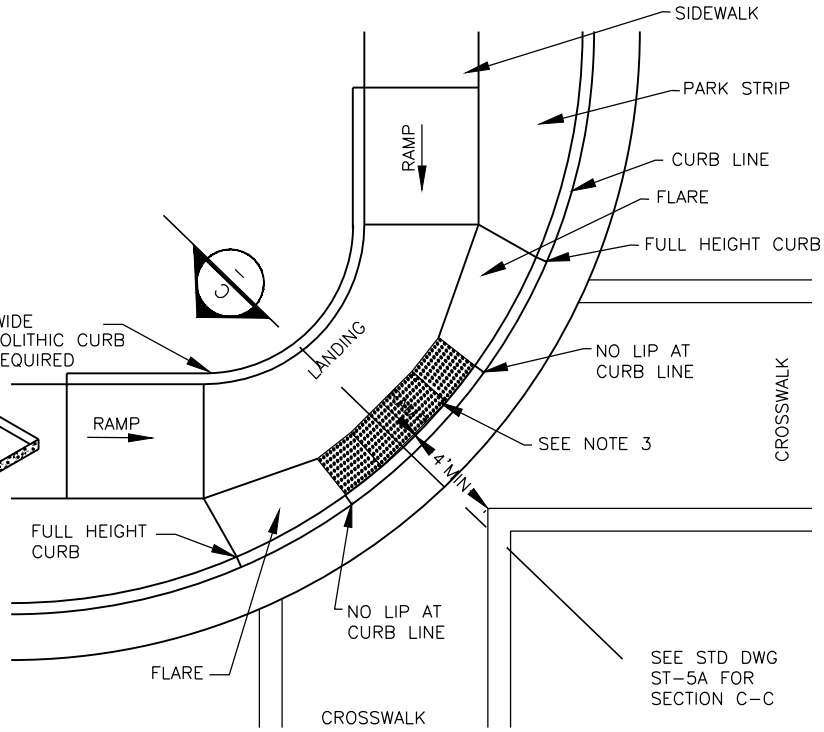

CORNER PEDESTRIAN RAMP EXAMPLE

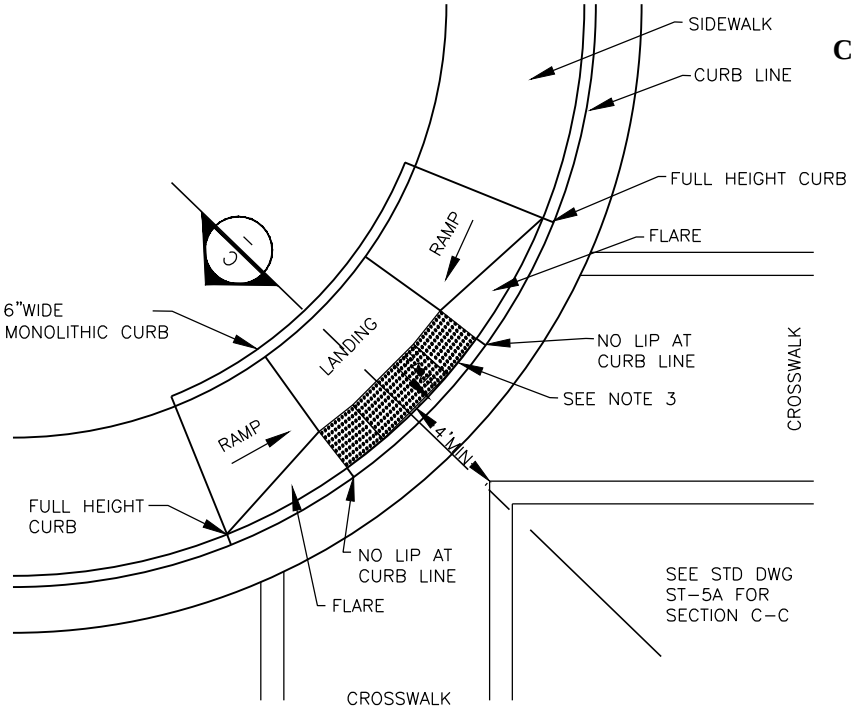

CORNER PEDESTRIAN RAMP EXAMPLE

NOTES:

1. REFER TO STD DWG ST 5A FOR PEDESTRIAN ACCESS RAMP DETAIL AND SLOPE REQUIREMENTS.

2. PROVIDE DETECTABLE WARNING SURFACE FOR FULL WIDTH OF RAMP, LANDING, OR CURB CUT. SEE DETAIL A ON STD DWG ST 5A FOR DETECTABLE WARNING SURFACE DIMENSIONS.

3. LOCATE DETECTABLE WARNING SURFACE SO THAT THE EDGE NEAREST THE STREET IS 6" TO 8" FROM THE CURB LINE.

4. WHEN DETECTABLE WARNING SURFACE IS CUT, GRIND REMAINING PORTION OF ANY CUT DOMES. SEAL ALL CUT PANEL EDGES TO PREVENT WATER DAMAGE.

5. LOCATE CURB CUT WITHIN CROSSWALK.

HANDICAP ACCESSIBLE RAMP

DATE:	APRIL 2014
DRAWING NAME:	ST-5E
DRAWN BY:	ELT
CHECKED:	APPROVED:

REVISIONS

REV	DATE	BY	COMMENTS

SARATOGA SPRINGS CITY

1307 N. COMMERCE DR.
#200, SARATOGA SPRINGS,
UT 84045
PHONE: 801-766-9793
FAX: 8017669794

STANDARD DETAILS

STREET STANDARDS

ST-5E

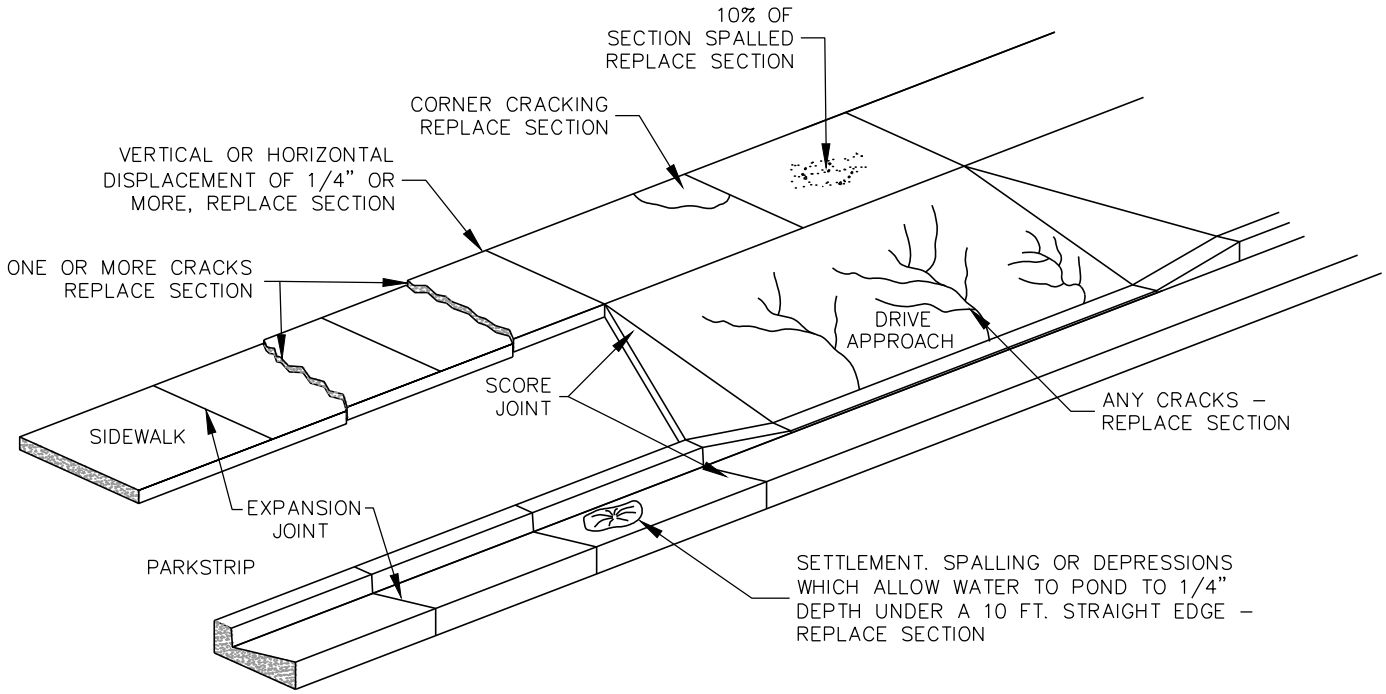

NOTES:

REPLACEMENT IS REQUIRED IF ANY COMPONENT HAS ONE OR MORE OF THE CONDITIONS NOTED ABOVE. OTHERWISE REPAIR SECTION UNDER THE DIRECTION OF THE CITY ENGINEER.

DEFECTIVE CONCRETE REPLACEMENT CRITERIA

DATE:	APRIL 2014
DRAWING NAME:	ST-6
DRAWN BY:	ETL
CHECKED:	APPROVED:

REVISIONS

REV	DATE	BY	COMMENTS

SARATOGA SPRINGS CITY
1307 N. COMMERCE DR.
#200, SARATOGA SPRINGS,
UT 84045
PHONE: 801-766-9793
FAX: 8017669794

STANDARD DETAILS

STREET STANDARDS

ST-6

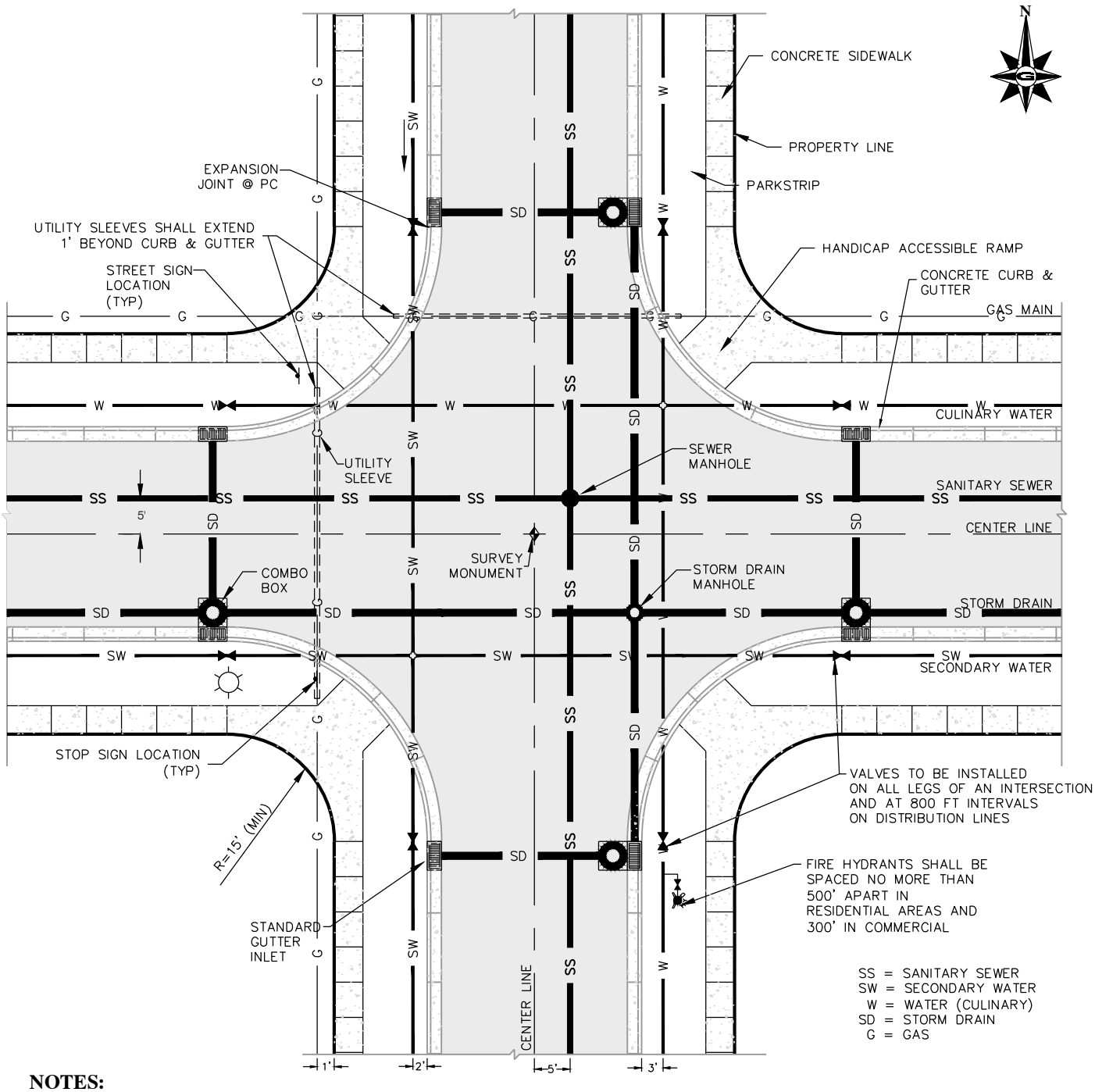

NOTES:

1. LAND DRAINS ARE UNACCEPTABLE UNLESS EXPLICITLY ALLOWED BY CITY ENGINEER. WHEN ALLOWED, PIPES SHALL NOT BE PERFORATED OR DESIGNED TO ACCEPT WATER WITHIN THE STREET RIGHT-OF-WAY.

2. CURB RADIUS ON LOCAL AND COLLECTOR RIGHT-OF-WAYS SHALL BE 25', ON MINOR ARTERIALS IT SHALL BE 35', AND ON MAJOR AND PRINCIPAL ARTERIALS SHALL BE 40' AS MEASURED FROM FACE OF CURB.

3. CHECK ALL CITY STANDARDS FOR UTILITY LOCATIONS.

4. STREET LIGHTS ARE TO BE CENTERED IN PARK STRIPS.

5. STREET LIGHTS ARE TO BE PLACED AT INTERSECTIONS AND EVERY 300 FEET, ALTERNATING SIDES OF STREET.

STANDARD INTERSECTION & UTILITY DETAILS

DATE:	APRIL 2014
DRAWING NAME:	ST-7
DRAWN BY:	ETL
CHECKED:	APPROVED:

REVISIONS

REV	DATE	BY	COMMENTS

SARATOGA SPRINGS CITY

1307 N. COMMERCE DR.
#200, SARATOGA SPRINGS, UT 84045
PHONE: 801-766-9793
FAX: 8017669794

STANDARD DETAILS

STREET STANDARDS

ST-7

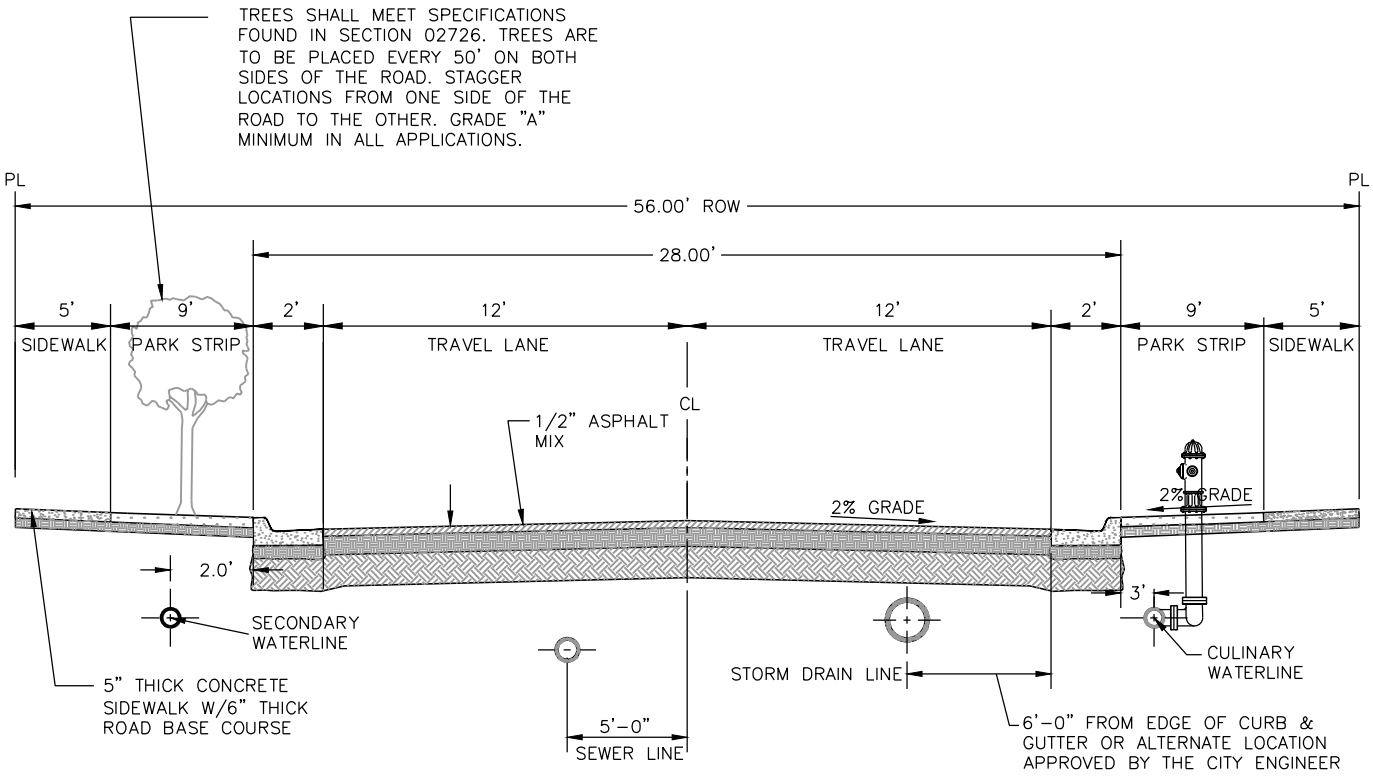

NOTES:

1. MAXIMUM DIFFERENCE IN ELEVATION BETWEEN CURB ON OPPOSITE SIDES OF STREET SHALL NOT EXCEED 1'-0"

2. PAVEMENT DESIGN MAY BE AS RECOMMENDED BY A SOILS REPORT AND A GEOTECHNICAL ENGINEER, AND AS APPROVED BY CITY ENGINEER. LOCATION OF SIDEWALK AND CURB & GUTTER MAY VARY ON INDIVIDUAL ARTERIAL STREETS PER DIRECTION OF CITY ENGINEER.

3. ALL RESIDENTIAL STREETS SHALL CONFORM TO THE CROSS-SECTION DRAWING ABOVE UNLESS APPROVED OTHERWISE BY THE CITY ENGINEER.

4. PROVIDE A MINIMUM 6" THICKNESS OF 3/4" OR 1" CRUSHED GRAVEL BASE COURSE UNDER SIDEWALKS, DRIVEWAY APPROACHES, AND CURB & GUTTER.

5. INSTALL TYPE 2 SLURRY SEAL.

6. HOUSES MAY FRONT ON THESE STREETS.

7. THIS ROW CROSS SECTION SHALL BE PERMITTED FOR PRIVATE ROAD CROSS SECTIONS IN THE FOLLOWING ZONES: R-2, R-3 AND R-4.

DESIGN CRITERIA

DESIGN SPEED: 25 M.P.H.

MIN CENTERLINE RADIUS: 200' MIN. UNLESS APPROVED OTHERWISE BY CITY ENGINEER.

VERTICAL CURVE REQUIREMENTS: SAG K VALUE = 37

CREST K VALUE = 20

RESIDENTIAL ROADWAY 56' RIGHT-OF-WAY

DATE:	APRIL 2014
DRAWING NAME:	ST-8
DRAWN BY:	ETL
CHECKED:	APPROVED:

REVISIONS

REV	DATE	BY	COMMENTS

SARATOGA SPRINGS CITY

1307 N. COMMERCE DR.
#200, SARATOGA SPRINGS, UT 84045
PHONE: 801-766-9793
FAX: 8017669794

STANDARD DETAILS

STREET STANDARDS

ST-8

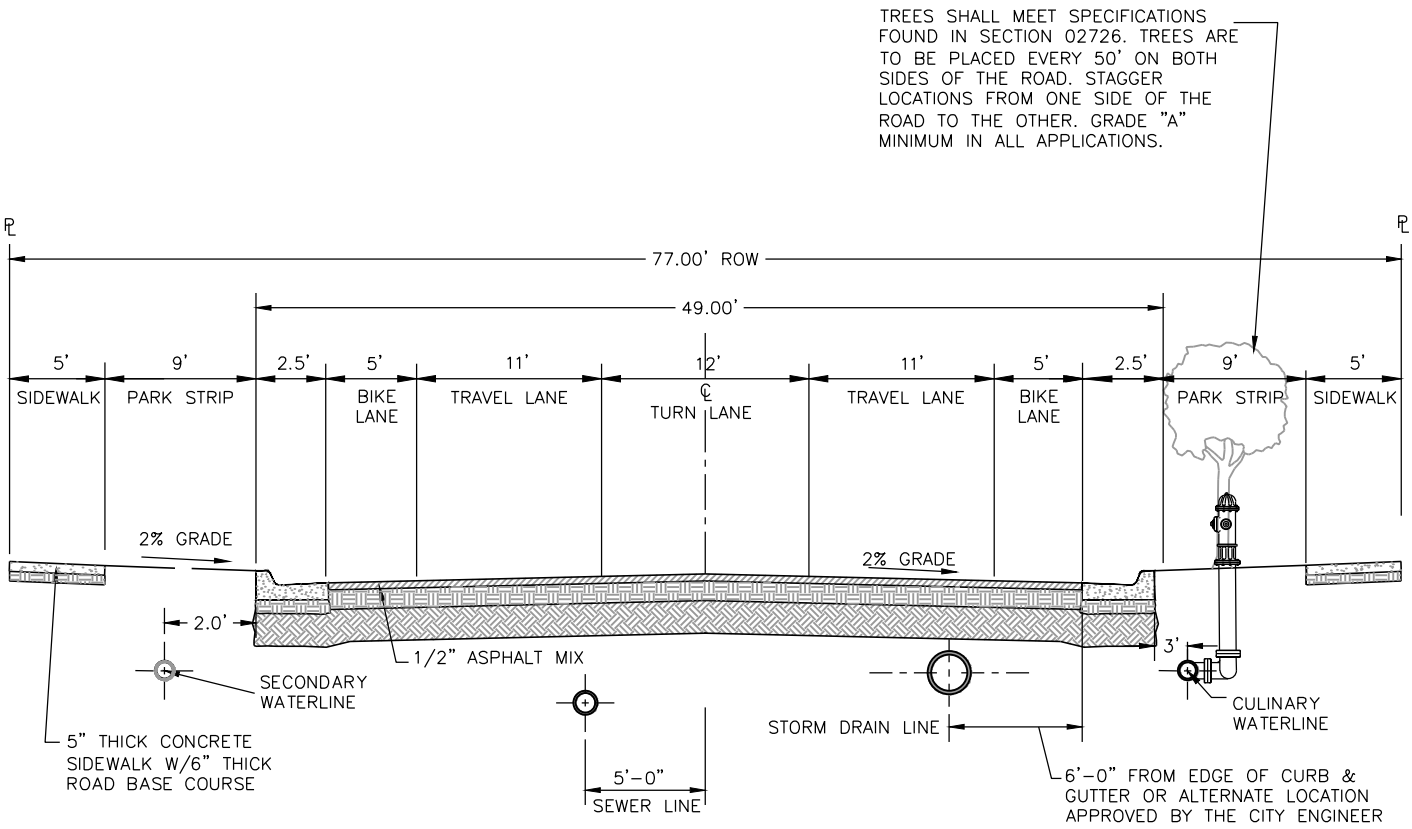

NOTES:

1. MAXIMUM DIFFERENCE IN ELEVATION BETWEEN CURB ON OPPOSITE SIDES OF STREET SHALL NOT EXCEED 1'-0"

2. PAVEMENT DESIGN SHALL BE AS RECOMMENDED BY A SOILS REPORT AND A GEOTECHNICAL ENGINEER, AND AS APPROVED BY CITY ENGINEER.

3. ALL COLLECTORS SHALL CONFORM TO THE CROSS-SECTION DRAWING ABOVE UNLESS APPROVED OTHERWISE BY THE CITY ENGINEER.

4. PROVIDE A MINIMUM 6" THICKNESS OF 3/4" OR 1" CRUSHED GRAVEL BASE COURSE UNDER SIDEWALKS, DRIVEWAY APPROACHES, AND CURB & GUTTER.

5. INSTALL TYPE 2 SLURRY SEAL.

6. HOUSES ARE DISCOURAGED FROM FRONTING ON THESE STREETS.

DESIGN CRITERIA

DESIGN SPEED: 30 M.P.H.

MIN CENTERLINE RADIUS: 300' MIN. UNLESS APPROVED OTHERWISE BY CITY ENGINEER.

VERTICAL CURVE REQUIREMENTS: SAG K VALUE = 49

CREST K VALUE = 29

COLLECTOR 77' RIGHT OF WAY

DATE:	APRIL 2014
DRAWING NAME:	ST-9
DRAWN BY:	ETL
CHECKED:	APPROVED:

REVISIONS

REV	DATE	BY	COMMENTS

SARATOGA SPRINGS CITY

1307 N. COMMERCE DR.
#200, SARATOGA SPRINGS, UT 84045
PHONE: 801-766-9793
FAX: 8017669794

STANDARD DETAILS

STREET STANDARDS

ST-9

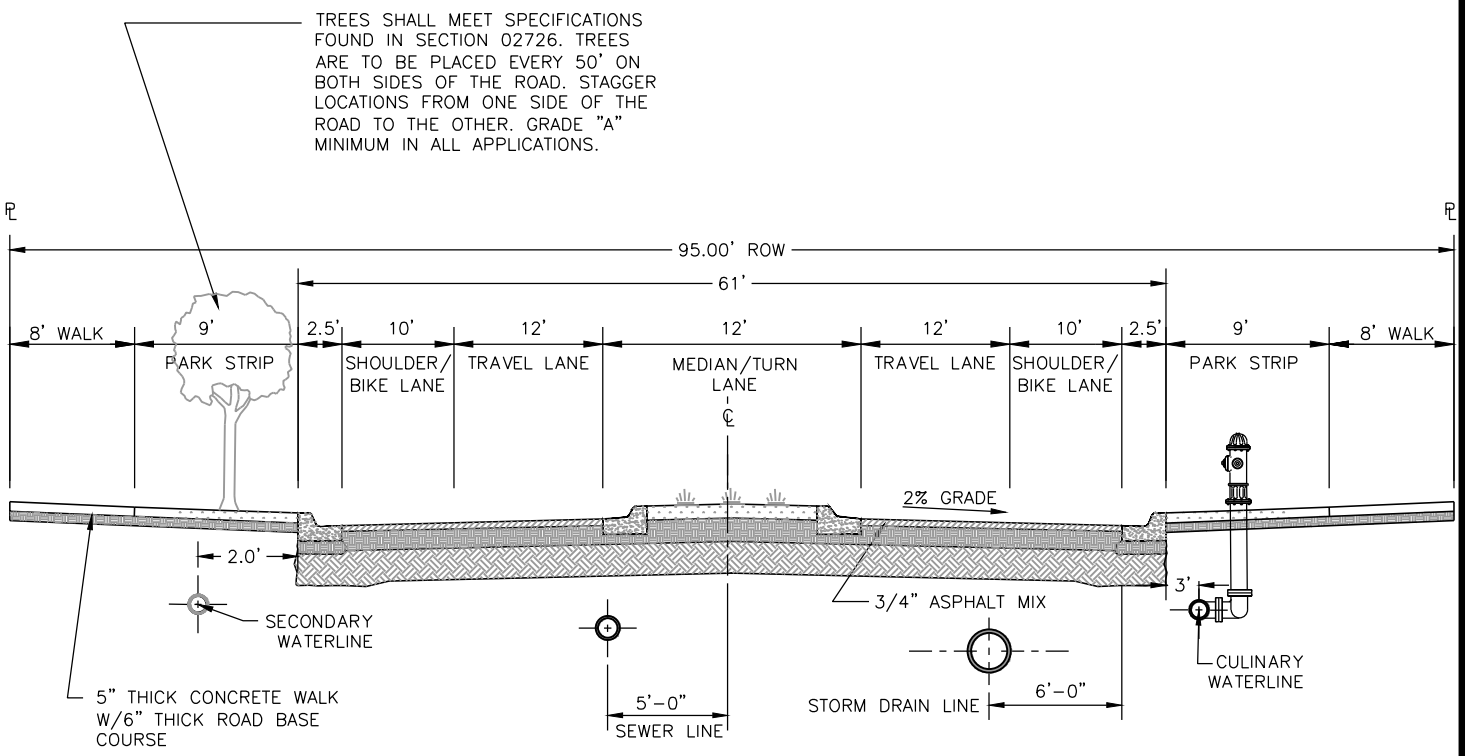

NOTES:

1. MAXIMUM DIFFERENCE IN ELEVATION BETWEEN CURB ON OPPOSITE SIDES OF STREET SHALL NOT EXCEED 1'-0"

2. PAVEMENT DESIGN SHALL BE AS RECOMMENDED BY A SOILS REPORT AND A GEOTECHNICAL ENGINEER, AND AS APPROVED BY CITY ENGINEER.

3. ALL MINOR ARTERIALS SHALL CONFORM TO THE CROSS-SECTION DRAWING ABOVE UNLESS APPROVED OTHERWISE BY THE CITY ENGINEER.

4. PROVIDE A MINIMUM 6" THICKNESS OF 3/4" OR 1" CRUSHED GRAVEL BASE COURSE UNDER SIDEWALKS, DRIVEWAY APPROACHES, AND CURB & GUTTER.

5. INSTALL TYPE 2 SLURRY SEAL.

6. COMMERCIAL OR INDUSTRIAL DRIVEWAYS CAN ENTER THIS ROADWAY, BUT ARE TO BE MINIMIZED.

7. HOUSES ARE NOT PERMITTED TO FRONT ON THESE STREETS.

8. PAVEMENT SECTION SHALL BE ADEQUATE FOR CONSTRUCTION TRAFFIC OR AN ALTERNATE ROUTE SHALL BE PROVIDED.

DESIGN CRITERIA

DESIGN SPEED: 40 M.P.H.

MIN CENTERLINE RADIUS: 565' MIN. UNLESS APPROVED OTHERWISE BY CITY ENGINEER.

VERTICAL CURVE REQUIREMENTS: SAG K VALUE = 64

CREST K VALUE = 44

MINOR ARTERIAL
95' RIGHT-OF-WAY

DATE: APRIL 2014	
DRAWING NAME: ST-10	
DRAWN BY: ETL	
CHECKED:	APPROVED:

REVISIONS

REV	DATE	BY	COMMENTS

SARATOGA SPRINGS CITY

1307 N. COMMERCE DR.
#200, SARATOGA SPRINGS, UT 84045
PHONE: 801-766-9793
FAX: 8017669794

STANDARD DETAILS

STREET STANDARDS

ST-10

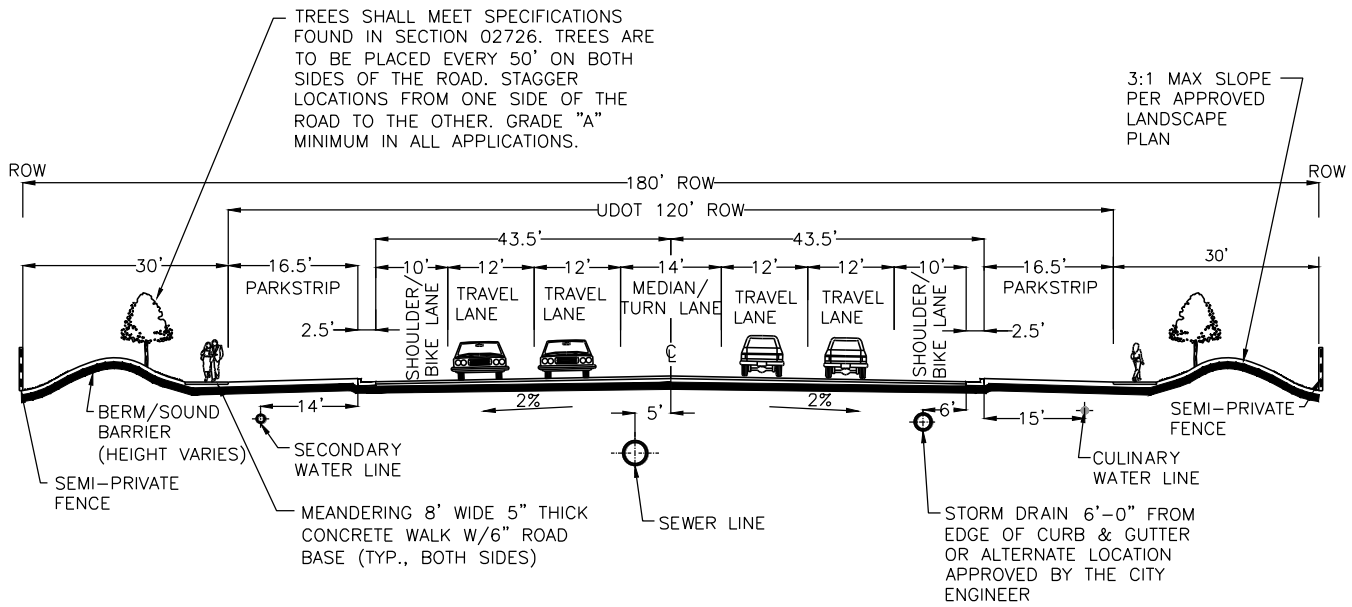

NOTES:

1. MAXIMUM DIFFERENCE IN ELEVATION BETWEEN CURB ON OPPOSITE SIDES OF STREET SHALL NOT EXCEED 1'-0"

2. PAVEMENT DESIGN SHALL BE AS RECOMMENDED BY A SOILS REPORT AND A GEOTECHNICAL ENGINEER, AND AS APPROVED BY CITY ENGINEER.

3. ALL MAJOR ARTERIAL ROADWAYS SHALL CONFORM TO THE CROSS-SECTION DRAWING ABOVE UNLESS APPROVED OTHERWISE BY THE CITY ENGINEER.

4. PROVIDE A MINIMUM 6" THICKNESS OF 3/4" OR 1" CRUSHED GRAVEL BASE COURSE UNDER SIDEWALKS, DRIVEWAY APPROACHES, AND CURB & GUTTER.

5. INSTALL TYPE 2 SLURRY SEAL.

6. HOUSES ARE NOT PERMITTED TO FRONT ON THESE STREETS.

7. ALL COMMERCIAL OR INDUSTRIAL ACCESSES ARE TO BE MINIMIZED.

DESIGN CRITERIA

DESIGN SPEED: 55 M.P.H.

MIN CENTERLINE RADIUS: 1190' MIN. UNLESS APPROVED OTHERWISE BY CITY ENGINEER.

VERTICAL CURVE REQUIREMENTS: SAG K VALUE = 115

CREST K VALUE = 114

MAJOR ARTERIAL ROADWAY 180' RIGHT-OF-WAY

DATE:	APRIL 2014
DRAWING NAME:	ST-11
DRAWN BY:	ETL
CHECKED:	APPROVED:

REVISIONS

REV	DATE	BY	COMMENTS

SARATOGA SPRINGS CITY

1307 N. COMMERCE DR.
#200, SARATOGA SPRINGS, UT 84045
PHONE: 801-766-9793
FAX: 8017669794

STANDARD DETAILS

STREET STANDARDS

ST-11

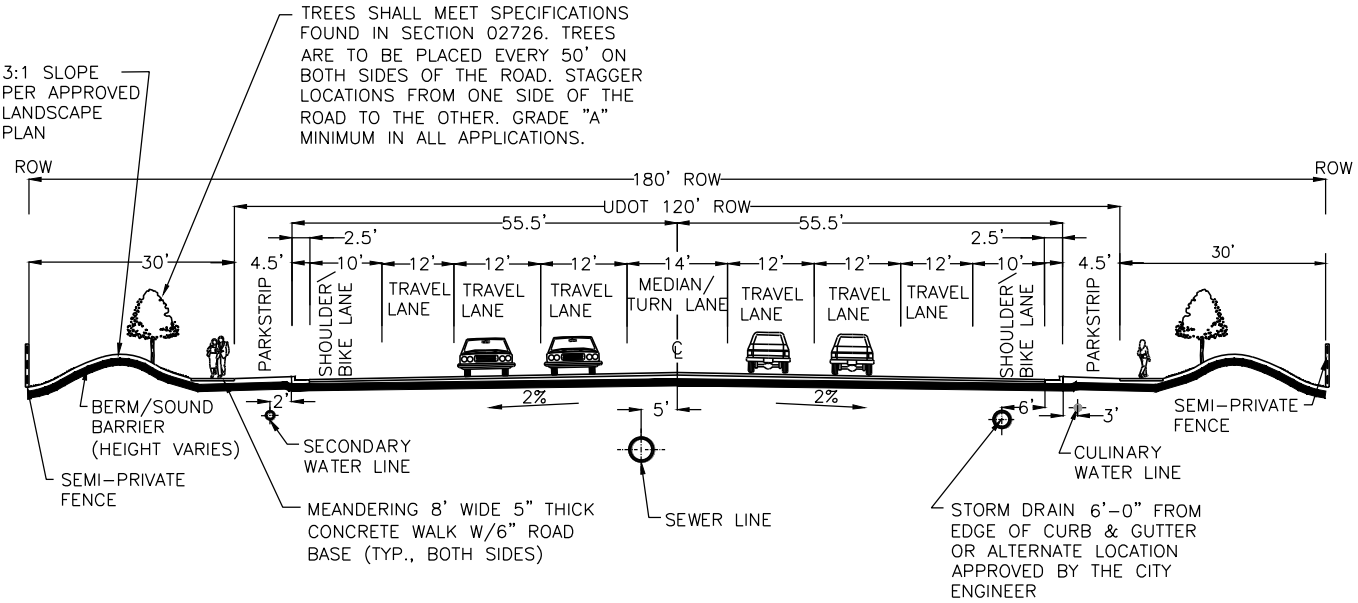

NOTES:

1. MAXIMUM DIFFERENCE IN ELEVATION BETWEEN CURB ON OPPOSITE SIDES OF STREET SHALL NOT EXCEED 1'-0"

2. PAVEMENT DESIGN SHALL BE AS RECOMMENDED BY A SOILS REPORT AND A GEOTECHNICAL ENGINEER, AND AS APPROVED BY CITY ENGINEER.

3. ALL PRINCIPAL ARTERIAL ROADWAYS SHALL CONFORM TO THE CROSS-SECTION DRAWING ABOVE UNLESS APPROVED OTHERWISE BY THE CITY ENGINEER.

4. PROVIDE A MINIMUM 6" THICKNESS OF 3/4" OR 1" CRUSHED GRAVEL BASE COURSE UNDER SIDEWALKS, DRIVEWAY APPROACHES, AND CURB & GUTTER.

5. INSTALL TYPE 2 SLURRY SEAL.

6. HOUSES ARE NOT PERMITTED TO FRONT ON THESE STREETS.

7. ALL COMMERCIAL OR INDUSTRIAL DRIVEWAY ARE TO BE MINIMIZED.

DESIGN CRITERIA

DESIGN SPEED: 55 M.P.H.

MIN CENTERLINE RADIUS: 1190' MIN. UNLESS APPROVED OTHERWISE BY CITY ENGINEER.

VERTICAL CURVE REQUIREMENTS: SAG K VALUE = 115

CREST K VALUE = 114

PRINCIPAL ARTERIAL ROADWAY 180' RIGHT-OF-WAY

DATE: APRIL 2014	
DRAWING NAME: ST-12	
DRAWN BY: ETL	
CHECKED:	APPROVED:

REVISIONS

REV	DATE	BY	COMMENTS

SARATOGA SPRINGS CITY

1307 N. COMMERCE DR.
#200, SARATOGA SPRINGS, UT 84045
PHONE: 801-766-9793
FAX: 8017669794

STANDARD DETAILS

STREET STANDARDS

ST-12

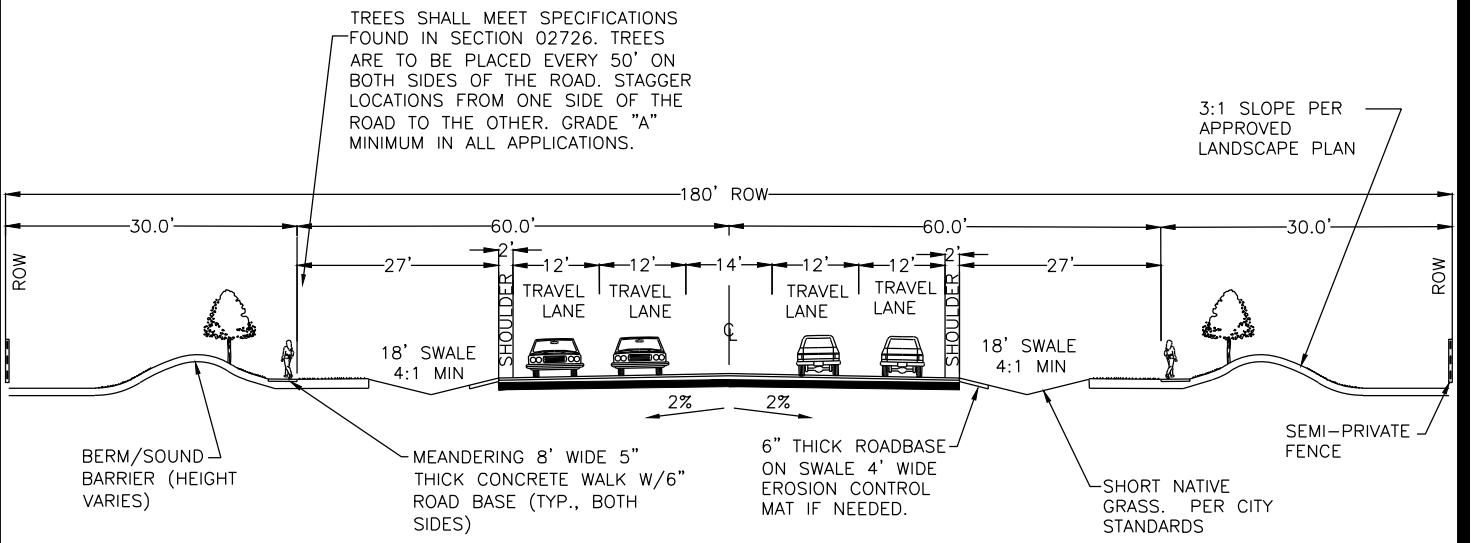

NOTES:

1. MAXIMUM DIFFERENCE IN ELEVATION BETWEEN CURB ON OPPOSITE SIDES OF STREET SHALL NOT EXCEED 1'-0"

2. PAVEMENT DESIGN SHALL BE AS RECOMMENDED BY A SOILS REPORT AND A GEOTECHNICAL ENGINEER, AND AS APPROVED BY CITY ENGINEER.

3. ARTERIAL ROADWAYS SHALL CONFORM TO THE CROSS-SECTION DRAWING ABOVE WHEN EXISTING ROADWAY IS 3 LANES OR LESS.

4. PROVIDE A MINIMUM 6" THICKNESS OF 3/4" OR 1" CRUSHED GRAVEL BASE COURSE UNDER SIDEWALKS, DRIVEWAY APPROACHES, AND CURB & GUTTER.

5. INSTALL TYPE 2 SLURRY SEAL.

6. HOUSES ARE NOT PERMITTED TO FRONT ON THESE STREETS.

7. ALL COMMERCIAL OR INDUSTRIAL DRIVEWAY ARE TO BE MINIMIZED.

DESIGN CRITERIA

DESIGN SPEED: 55 M.P.H.

MIN CENTERLINE RADIUS: 1190' MIN. UNLESS APPROVED OTHERWISE BY CITY ENGINEER.

VERTICAL CURVE REQUIREMENTS: SAG K VALUE = 115

CREST K VALUE = 114

INTERIM 180' RIGHT-OF-WAY ARTERIAL STANDARD

DATE:	APRIL 2014
DRAWING NAME:	ST-13
DRAWN BY:	ETL
CHECKED:	APPROVED:

REVISIONS

REV	DATE	BY	COMMENTS

SARATOGA SPRINGS CITY
1307 N. COMMERCE DR. #200, SARATOGA SPRINGS, UT 84045
PHONE: 801-766-9793
FAX: 8017669794

STANDARD DETAILS

STREET STANDARDS

ST-13

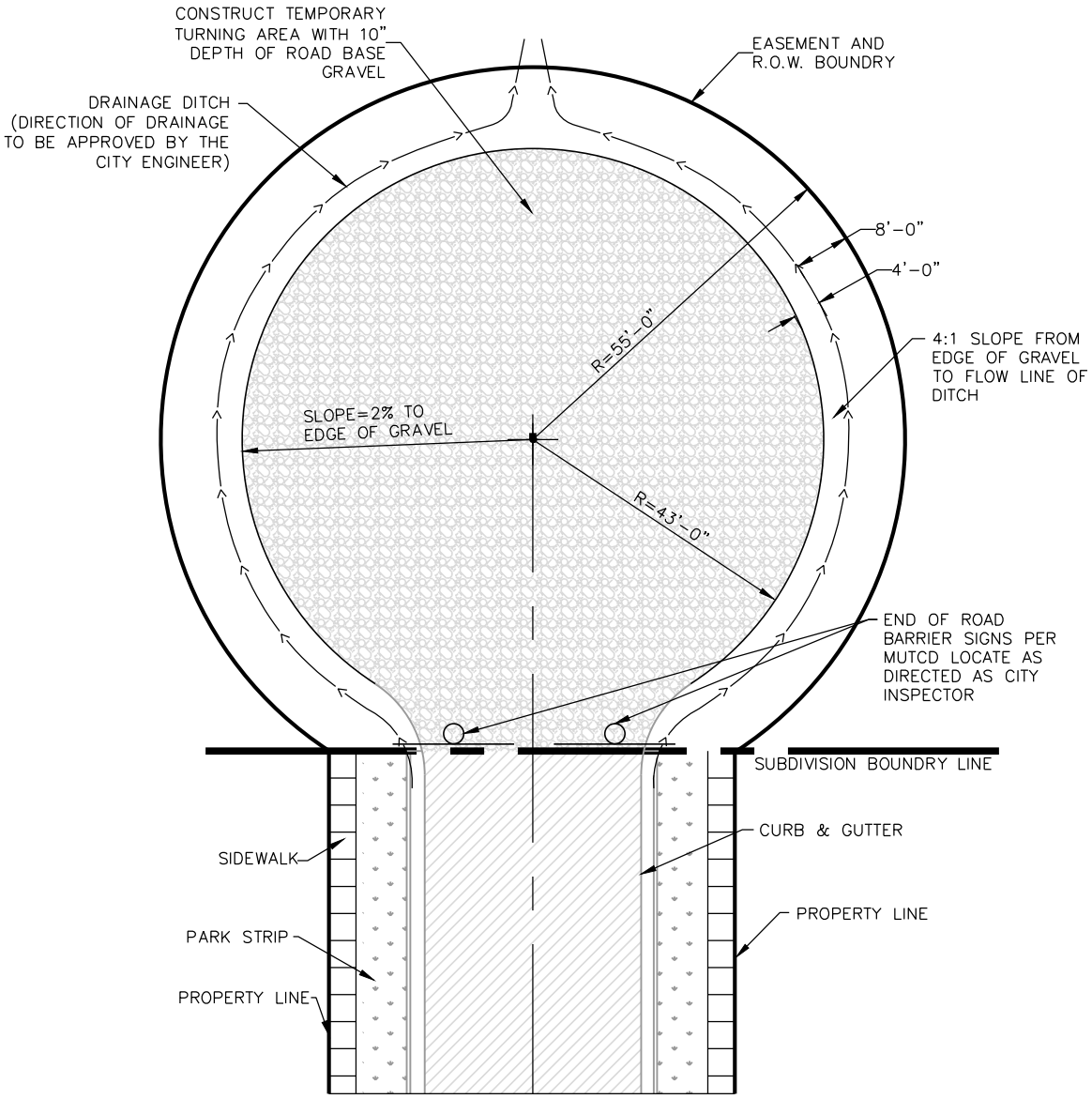

STANDARD TEMPORARY TURN AROUND

DATE:	APRIL 2014
DRAWING NAME:	ST-14
DRAWN BY:	ETL
CHECKED:	APPROVED:

REVISIONS

REV	DATE	BY	COMMENTS

SARATOGA SPRINGS CITY

1307 N. COMMERCE DR.
#200, SARATOGA SPRINGS,
UT 84045
PHONE: 801-766-9793
FAX: 8017669794

STANDARD DETAILS

STREET STANDARDS

ST-14

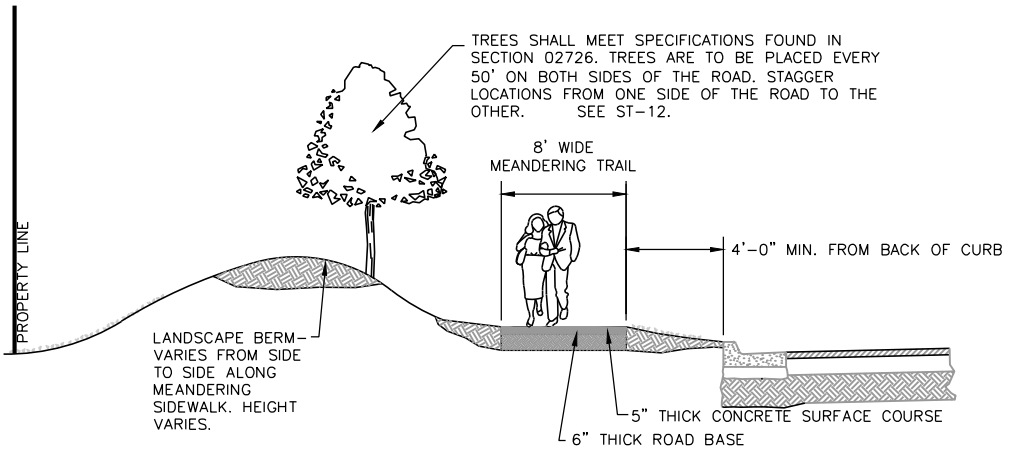

SECTION VIEW

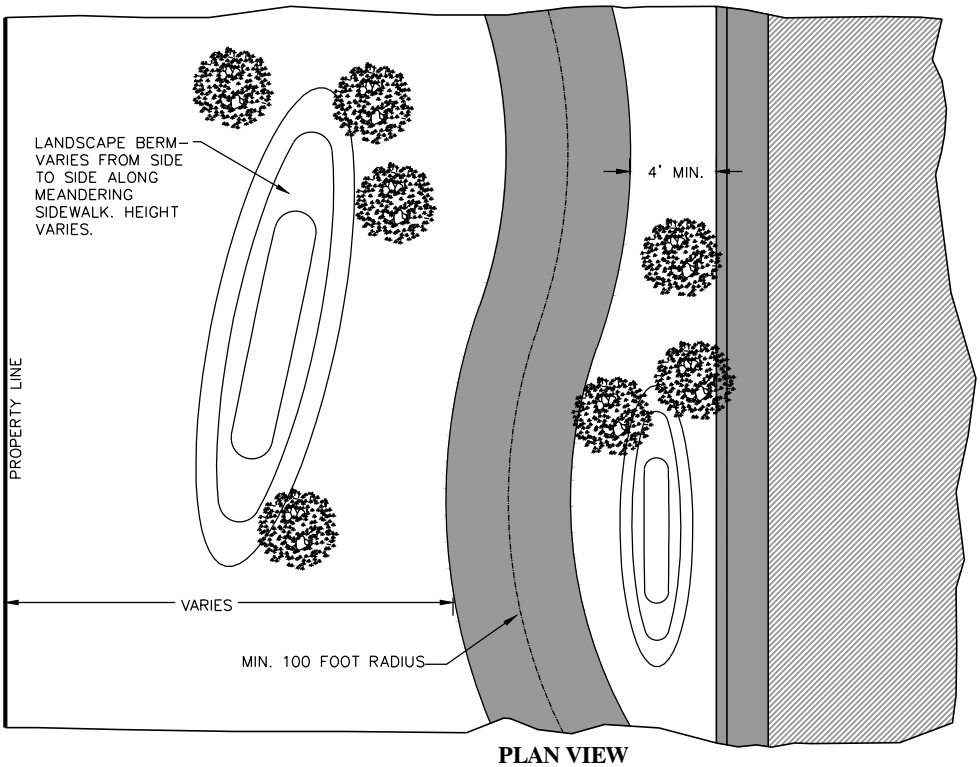

PLAN VIEW

NOTES:

1. MEANDERING SIDEWALKS/TRAILS SHALL BE PERMITTED ON ARTERIAL STREETS ONLY, UNLESS APPROVED BY CITY ENGINEER.

2. CENTER LINE RADIUS OF MEANDERING SIDEWALKS/TRAILS SHALL BE APPROVED BY CITY ENGINEER.

3. CONSTRUCTION JOINTS @ 8' INTERVALS EXPANSION JOINTS @ 40' INTERVALS

8' WIDE TRAIL STANDARDS

DATE:	APRIL 2014
DRAWING NAME:	ST-15A
DRAWN BY:	ETL
CHECKED:	APPROVED:

REVISIONS

REV	DATE	BY	COMMENTS

SARATOGA SPRINGS CITY

1307 N. COMMERCE DR.
#200, SARATOGA SPRINGS,
UT 84045
PHONE: 801-766-9793
FAX: 8017669794

STANDARD DETAILS

STREET STANDARDS

ST-15A

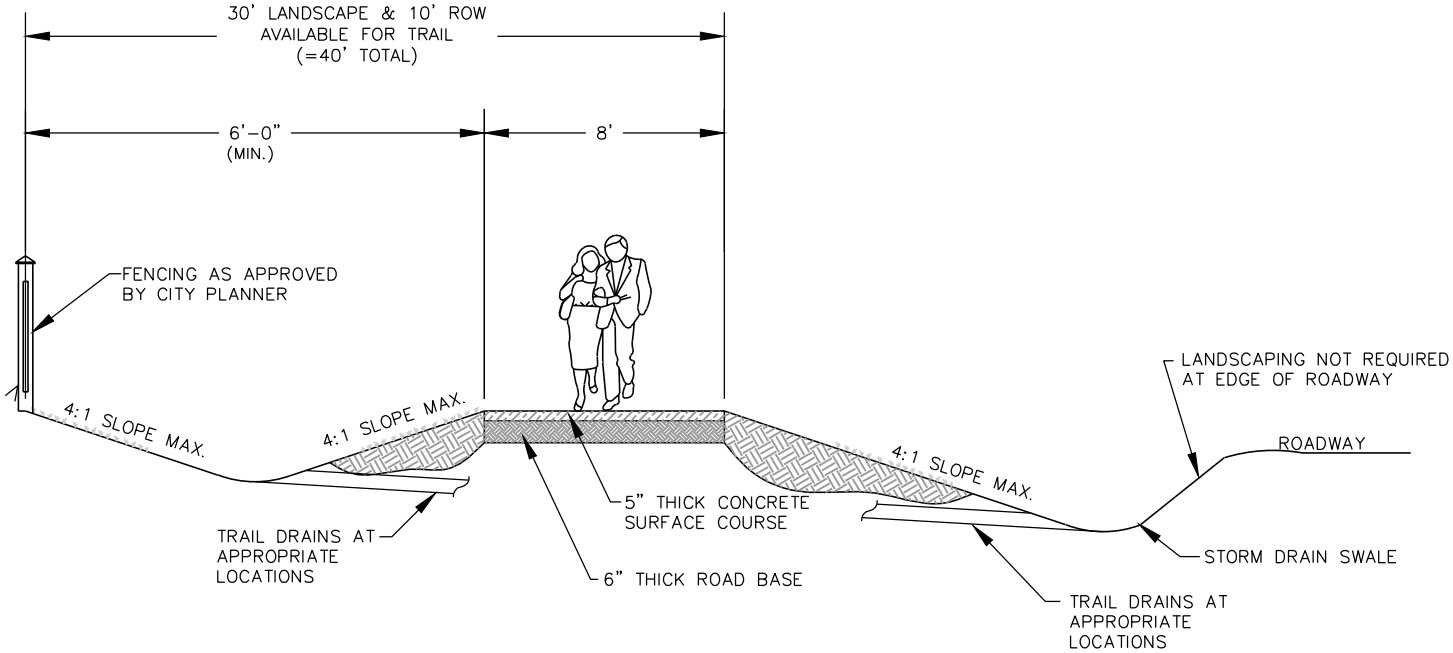

NOTES:

1. MEANDERING SIDEWALKS/TRAILS SHALL BE PERMITTED ONLY, APPROVED BY CITY ENGINEER AND CITY PLANNER

2. CENTER LINE RADIUS OF MEANDERING SIDEWALKS/TRAILS SHALL BE APPROVED BY CITY ENGINEER

3. CONSTRUCTION JOINTS @ 8' INTERVALS EXPANSION JOINTS @ 40 ' INTERVALS

8' WIDE TRAIL STANDARDS FOR INTERIM ROADS

DATE: APRIL 2014

DRAWING NAME: ST-15B

DRAWN BY: ETL

CHECKED: APPROVED:

REVISIONS

REV	DATE	BY	COMMENTS

SARATOGA SPRINGS CITY

1307 N. COMMERCE DR.
#200, SARATOGA SPRINGS,
UT 84045
PHONE: 801-766-9793
FAX: 8017669794

STANDARD DETAILS

STREET STANDARDS

ST-15B

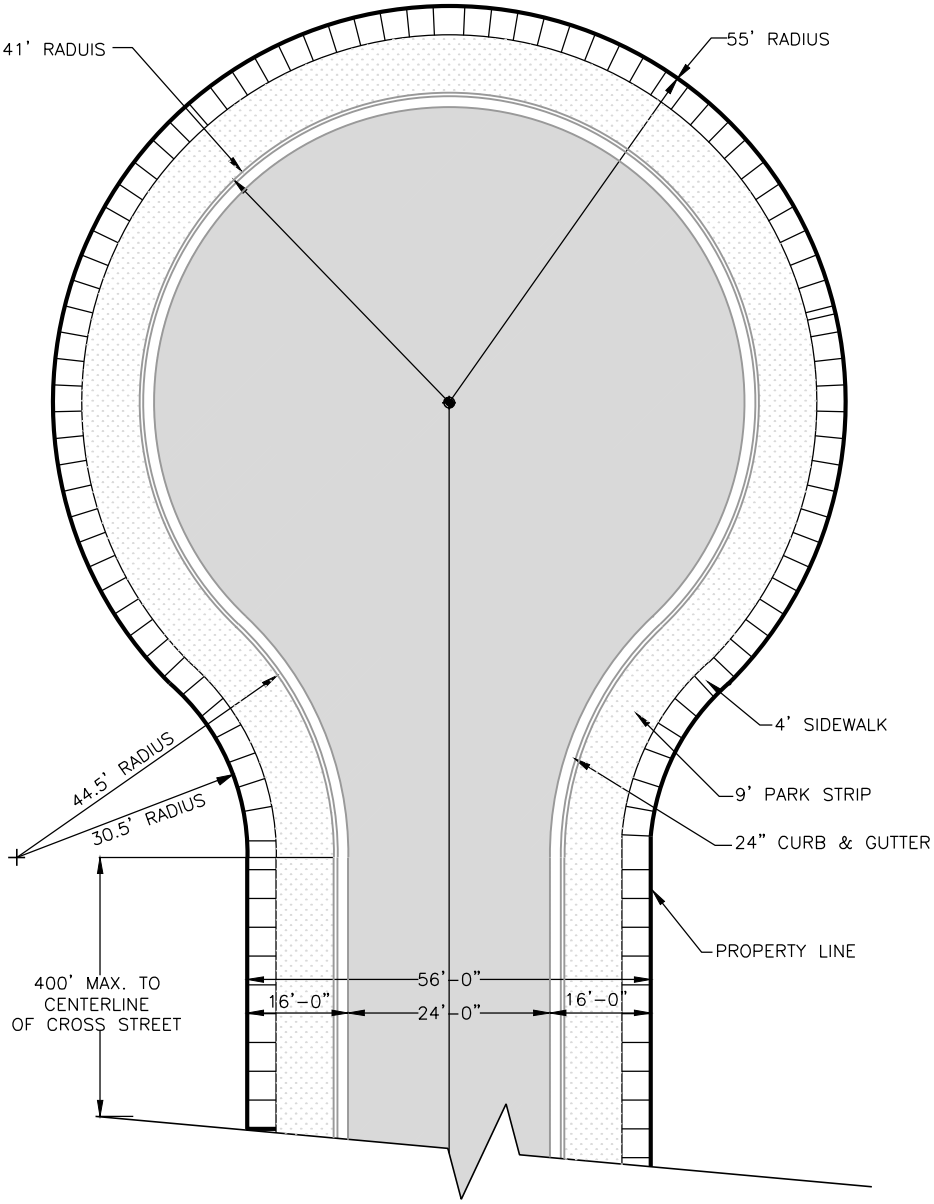

NOTE:

MAXIMUM 4.0% SLOPE IN CUL-DE-SAC IN ANY DIRECTION

STANDARD CUL-DE-SAC

DATE:	APRIL 2014
DRAWING NAME:	ST-16
DRAWN BY:	ETL
CHECKED:	APPROVED:

REVISIONS

REV	DATE	BY	COMMENTS

SARATOGA SPRINGS CITY

1307 N. COMMERCE DR.
#200, SARATOGA SPRINGS,
UT 84045
PHONE: 801-766-9793
FAX: 8017669794

STANDARD DETAILS

STREET STANDARDS

ST-16

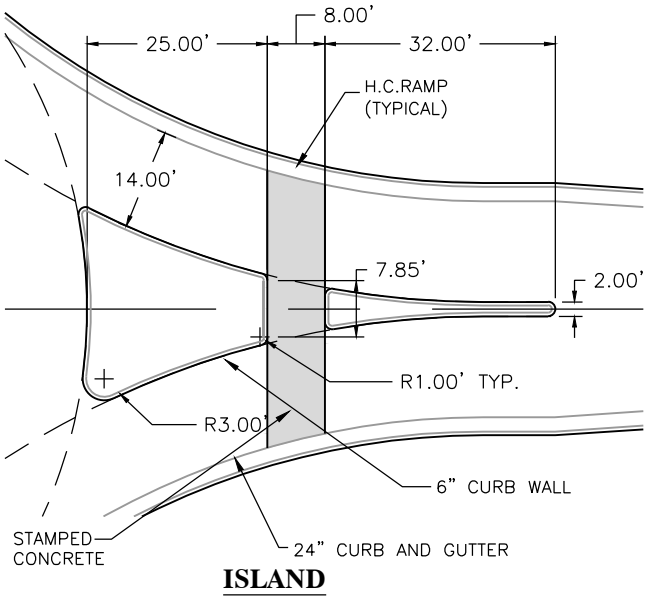

ISLAND

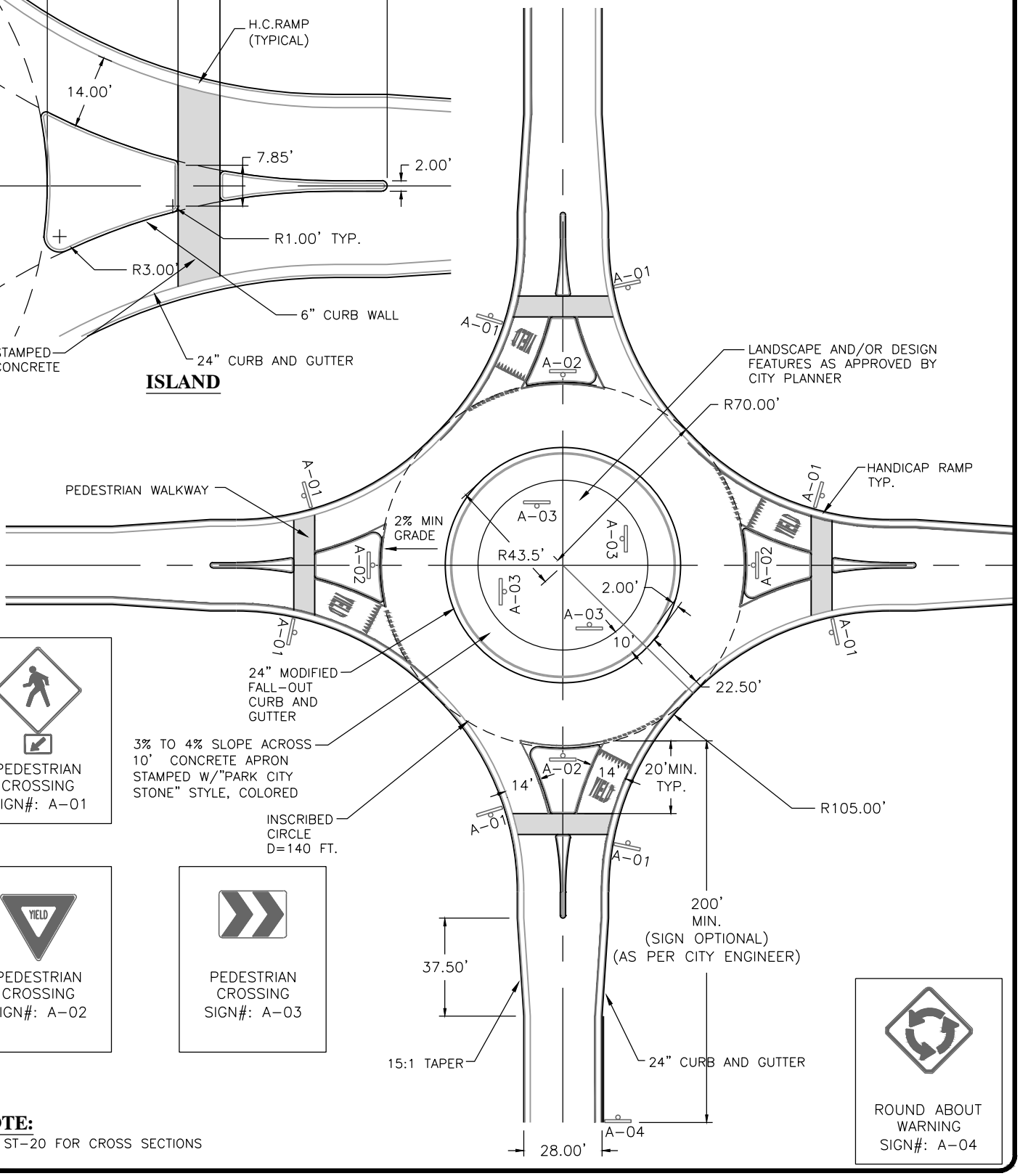

NOTE:
SEE ST-20 FOR CROSS SECTIONS

ROUND-ABOUT RESIDENTIAL 56' RIGHT-OF-WAY

DATE:	APRIL 2014
DRAWING NAME:	ST-17
DRAWN BY:	ETL
CHECKED:	APPROVED:

REVISIONS

REV	DATE	BY	COMMENTS

SARATOGA SPRINGS CITY

1307 N. COMMERCE DR.
#200, SARATOGA SPRINGS,
UT 84045
PHONE: 801-766-9793
FAX: 8017669794

STANDARD DETAILS

STREET STANDARDS

ST-17

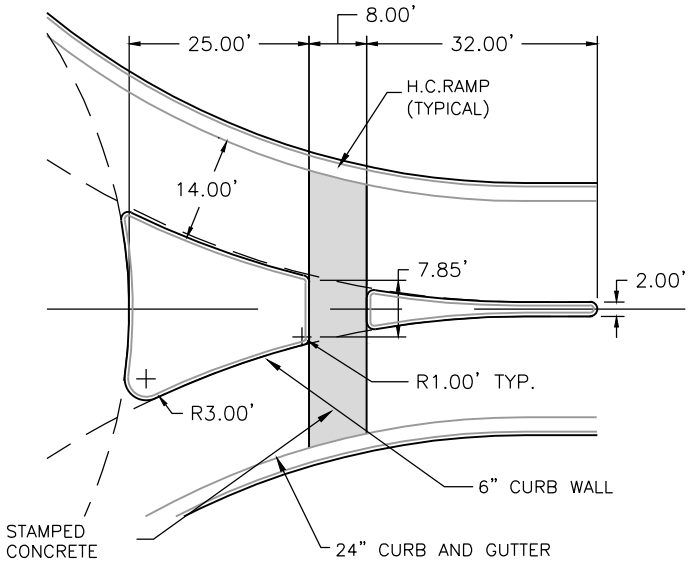

ISLAND

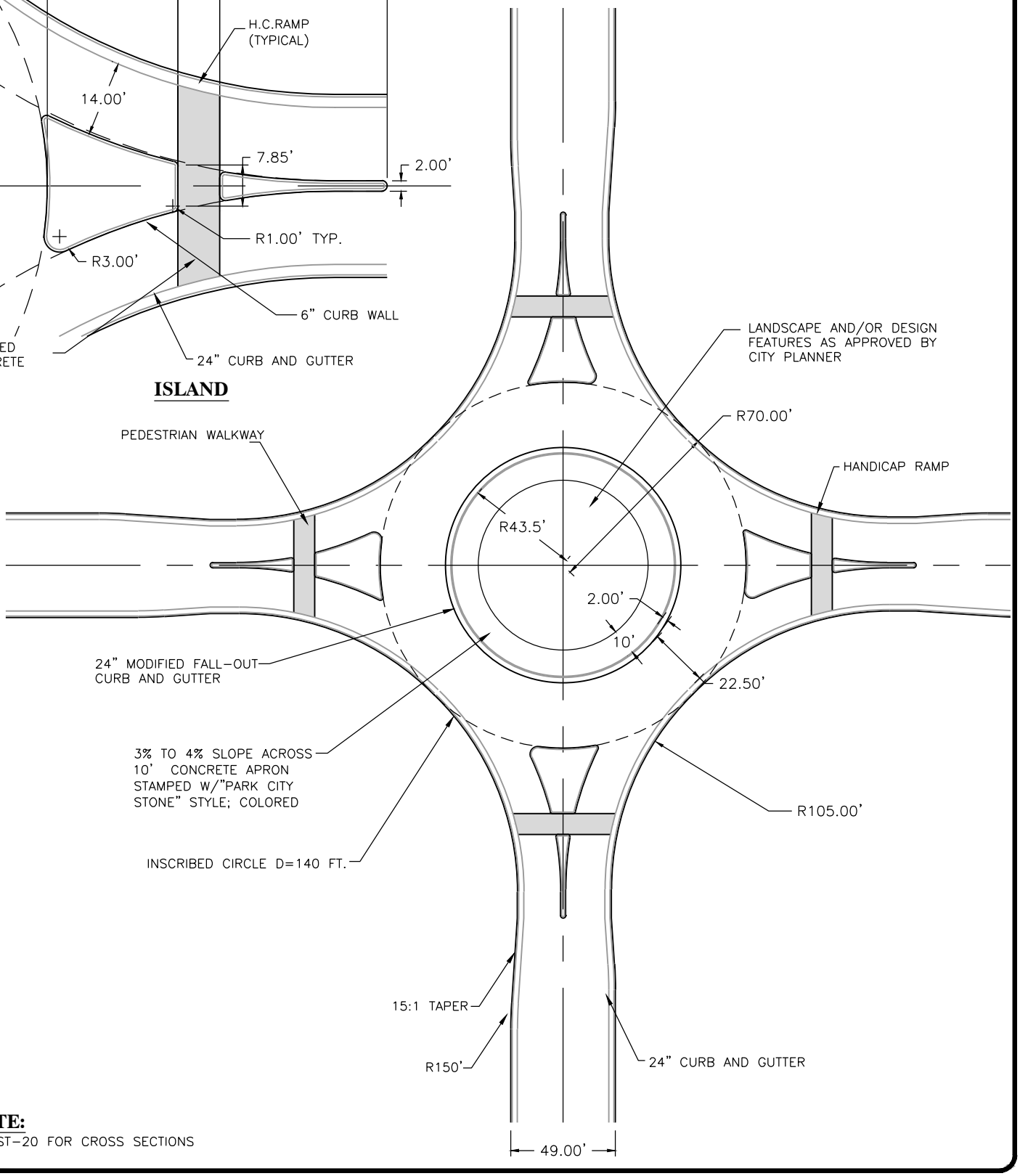

NOTE:
SEE ST-20 FOR CROSS SECTIONS

ROUND-ABOUT MINOR COLLECTOR- 77' CROSS SECTION

DATE:	APRIL 2014
DRAWING NAME:	ST-18
DRAWN BY:	ETL
CHECKED:	APPROVED:

REVISIONS

REV	DATE	BY	COMMENTS

SARATOGA SPRINGS CITY

1307 N. COMMERCE DR.
#200, SARATOGA SPRINGS,
UT 84045
PHONE: 801-766-9793
FAX: 8017669794

STANDARD DETAILS

STREET STANDARDS

ST-18

NOTE:
SEE ST-20 FOR CROSS SECTIONS

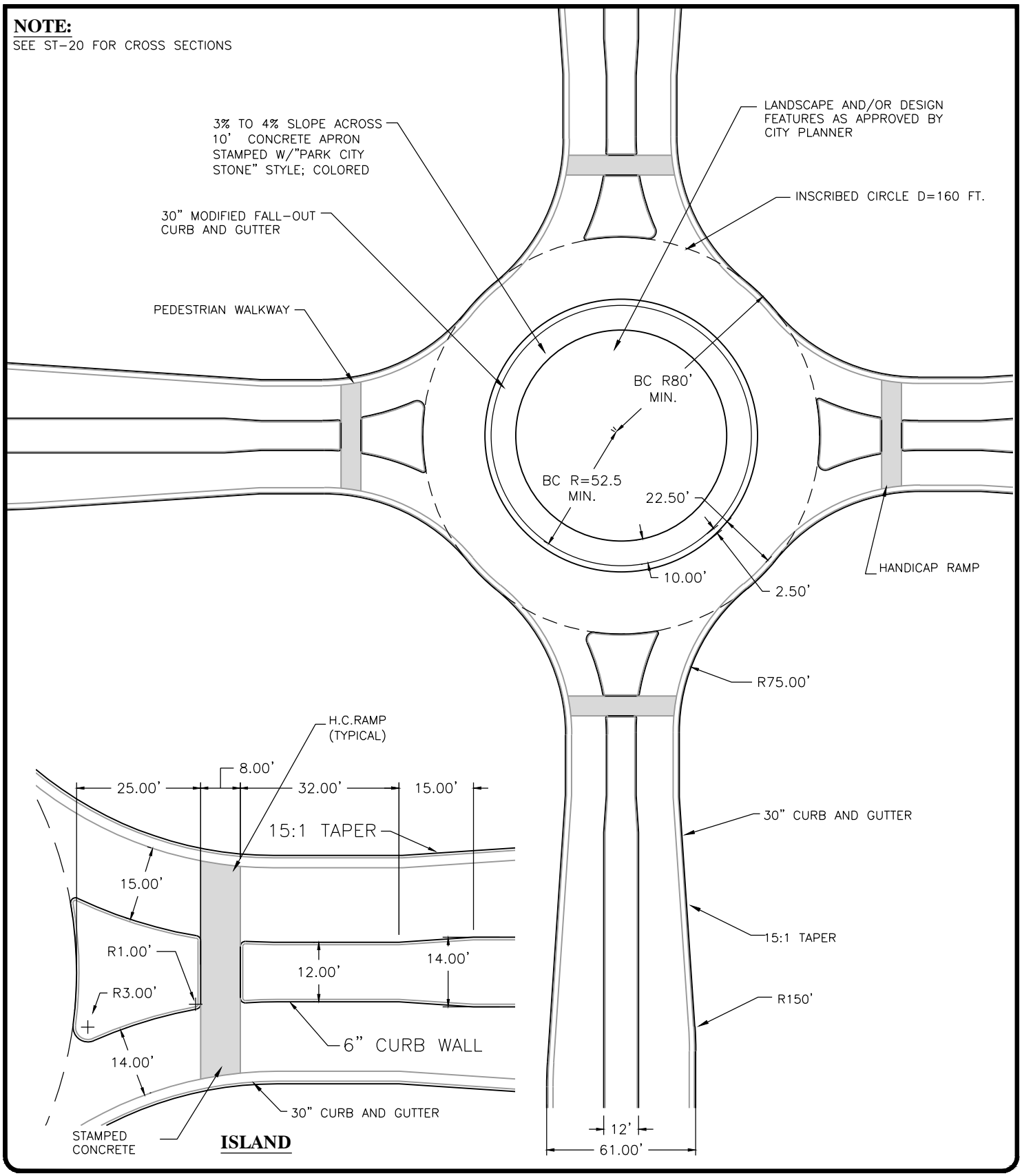

ROUND-ABOUT
95' MINOR ARTERIAL
RIGHT- OF - WAY

DATE:	APRIL 2014
DRAWING NAME:	ST-19
DRAWN BY:	ETL
CHECKED:	APPROVED:

REVISIONS

REV	DATE	BY	COMMENTS

SARATOGA SPRINGS CITY

1307 N. COMMERCE DR.
#200, SARATOGA SPRINGS,
UT 84045
PHONE: 801-766-9793
FAX: 8017669794

STANDARD DETAILS

STREET STANDARDS

ST-19

NOTE:
SEE ST-20 FOR CROSS SECTIONS

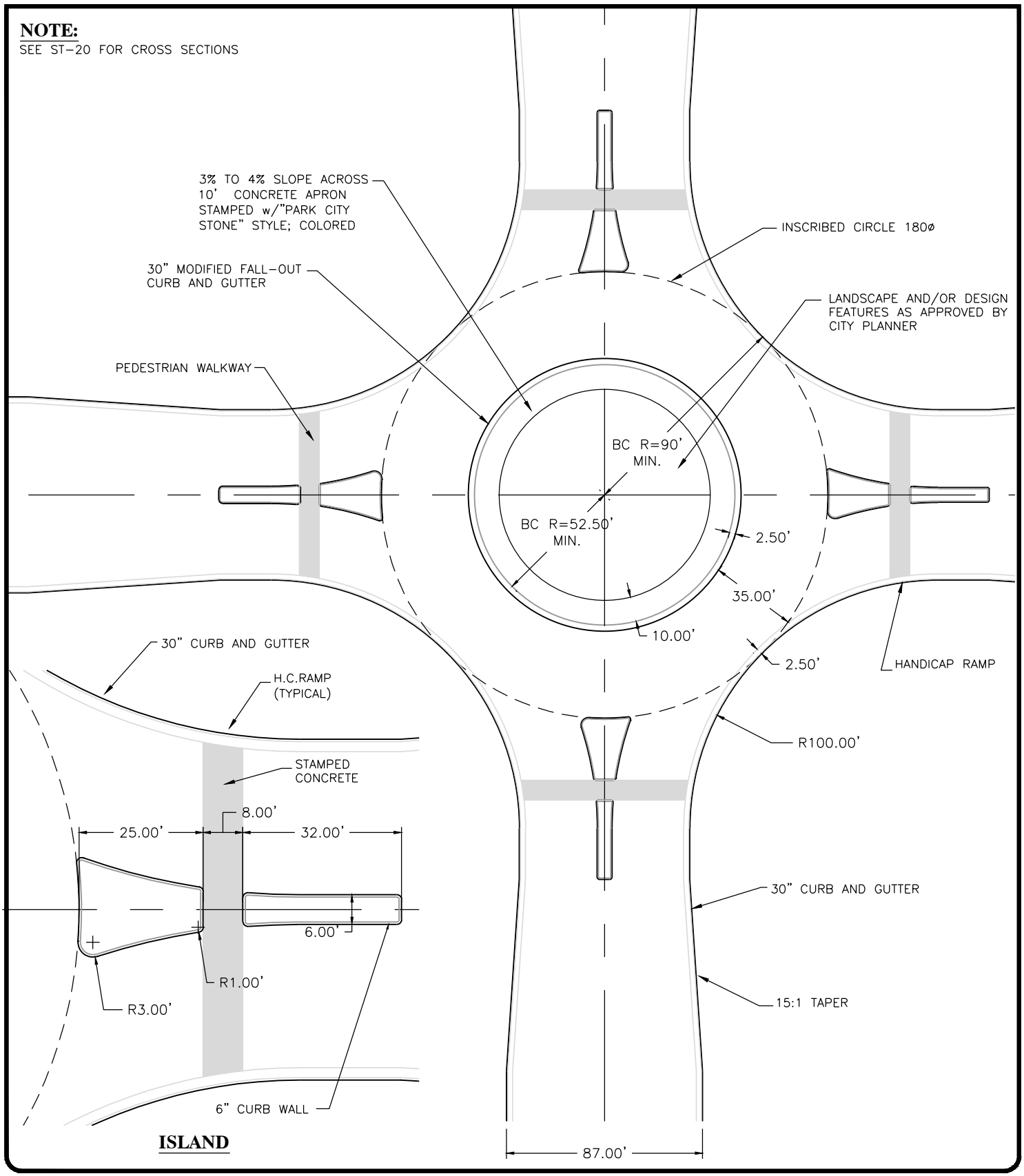

ISLAND

ROUND-ABOUT MAJOR ARTERIAL COLLECTOR 180' RIGHT-OF-WAY

DATE:	APRIL 2014
DRAWING NAME:	ST-20
DRAWN BY:	ETL
CHECKED:	APPROVED:

REVISIONS

REV	DATE	BY	COMMENTS

SARATOGA SPRINGS CITY

1307 N. COMMERCE DR.
#200, SARATOGA SPRINGS,
UT 84045
PHONE: 801-766-9793
FAX: 8017669794

STANDARD DETAILS

STREET STANDARDS

ST-20

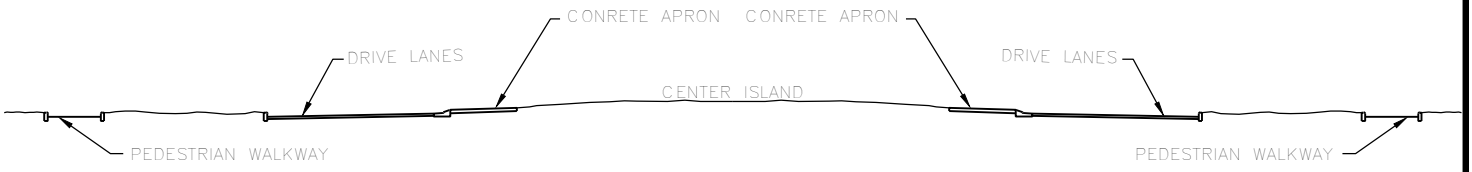

FULL CROSS SECTION

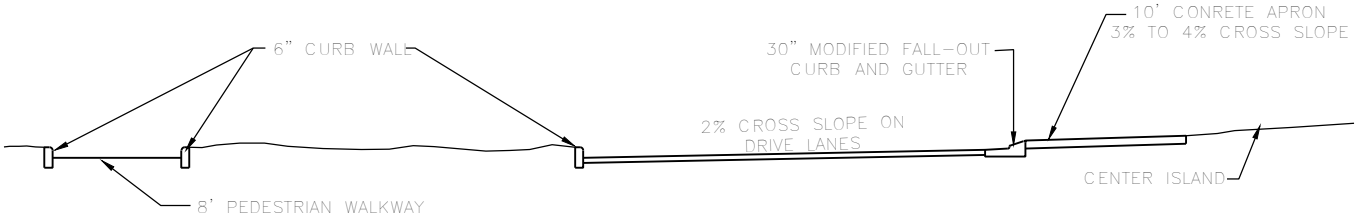

HALF WIDTH CROSS SECTION

ROUND-ABOUT TYPICAL CROSS SECTION

DATE:	APRIL 2014
DRAWING NAME:	ST-21
DRAWN BY:	ETL
CHECKED:	APPROVED:

REVISIONS

REV	DATE	BY	COMMENTS

SARATOGA SPRINGS CITY

1307 N. COMMERCE DR.
#200, SARATOGA SPRINGS,
UT 84045
PHONE: 801-766-9793
FAX: 8017669794

STANDARD DETAILS

STREET STANDARDS

ST-21

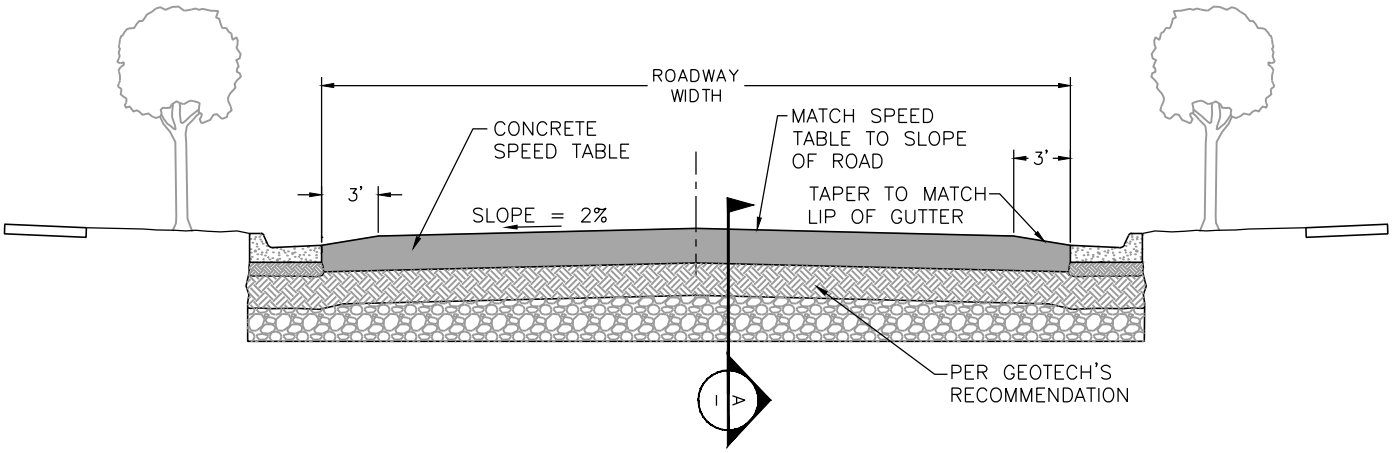

TYPICAL - CROSS SECTION

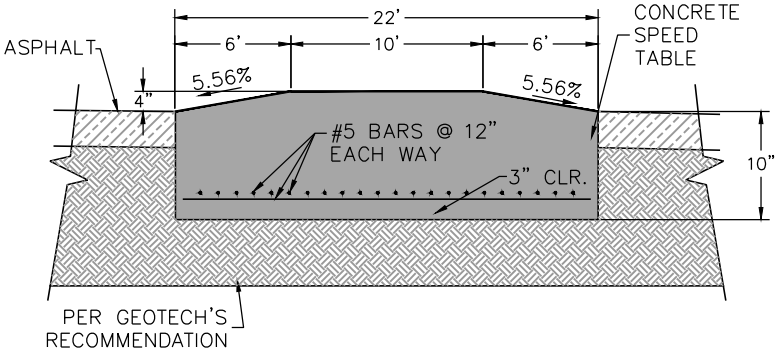

SECTION A

NTS

SPEED TABLE DETAIL

DATE:	APRIL 2014
DRAWING NAME:	ST-22
DRAWN BY:	ETL
CHECKED:	APPROVED:

REVISIONS

REV	DATE	BY	COMMENTS

SARATOGA SPRINGS CITY

1307 N. COMMERCE DR.
#200, SARATOGA SPRINGS,
UT 84045
PHONE: 801-766-9793
FAX: 8017669794

STANDARD DETAILS

STREET STANDARDS

ST-22

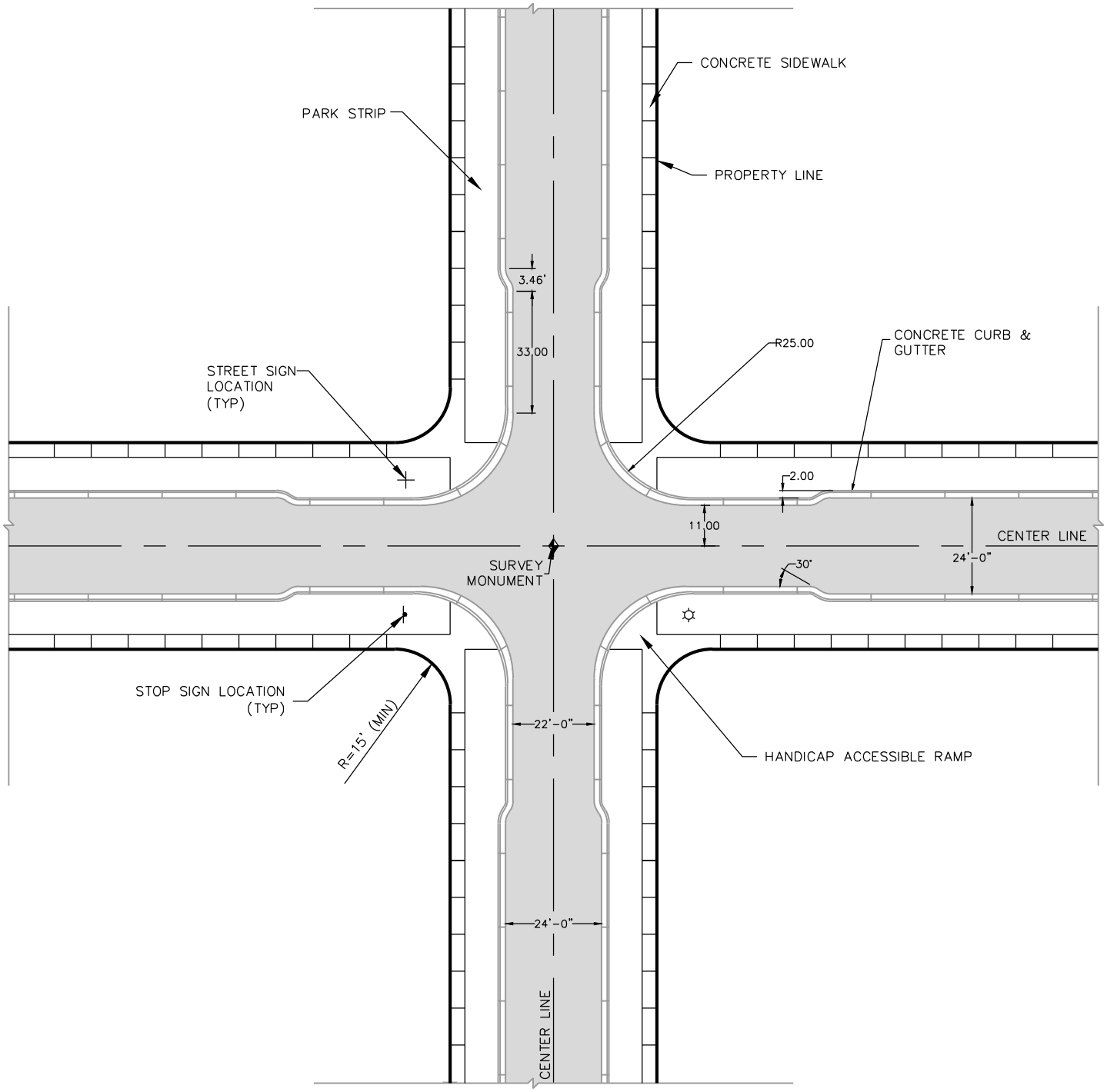

NOTES:

1. LAND DRAINS ARE UNACCEPTABLE UNLESS EXPLICITLY ALLOWED BY CITY ENGINEER. WHEN ALLOWED, PIPES SHALL NOT BE PERFORATED OR DESIGNED TO ACCEPT WATER WITHIN THE STREET RIGHT-OF-WAY.

2. CHECK ALL CITY STANDARDS FOR UTILITY LOCATIONS.

56' ROW NECKED INTERSECTION DETAIL

DATE: APRIL 2014

DRAWING NAME: ST-23

DRAWN BY:

CHECKED: APPROVED:

REVISIONS

REV	DATE	BY	COMMENTS

SARATOGA SPRINGS CITY

1307 N. COMMERCE DR.
#200, SARATOGA SPRINGS,
UT 84045
PHONE: 801-766-9793
FAX: 8017669794

STANDARD DETAILS

STREET STANDARDS

ST-23

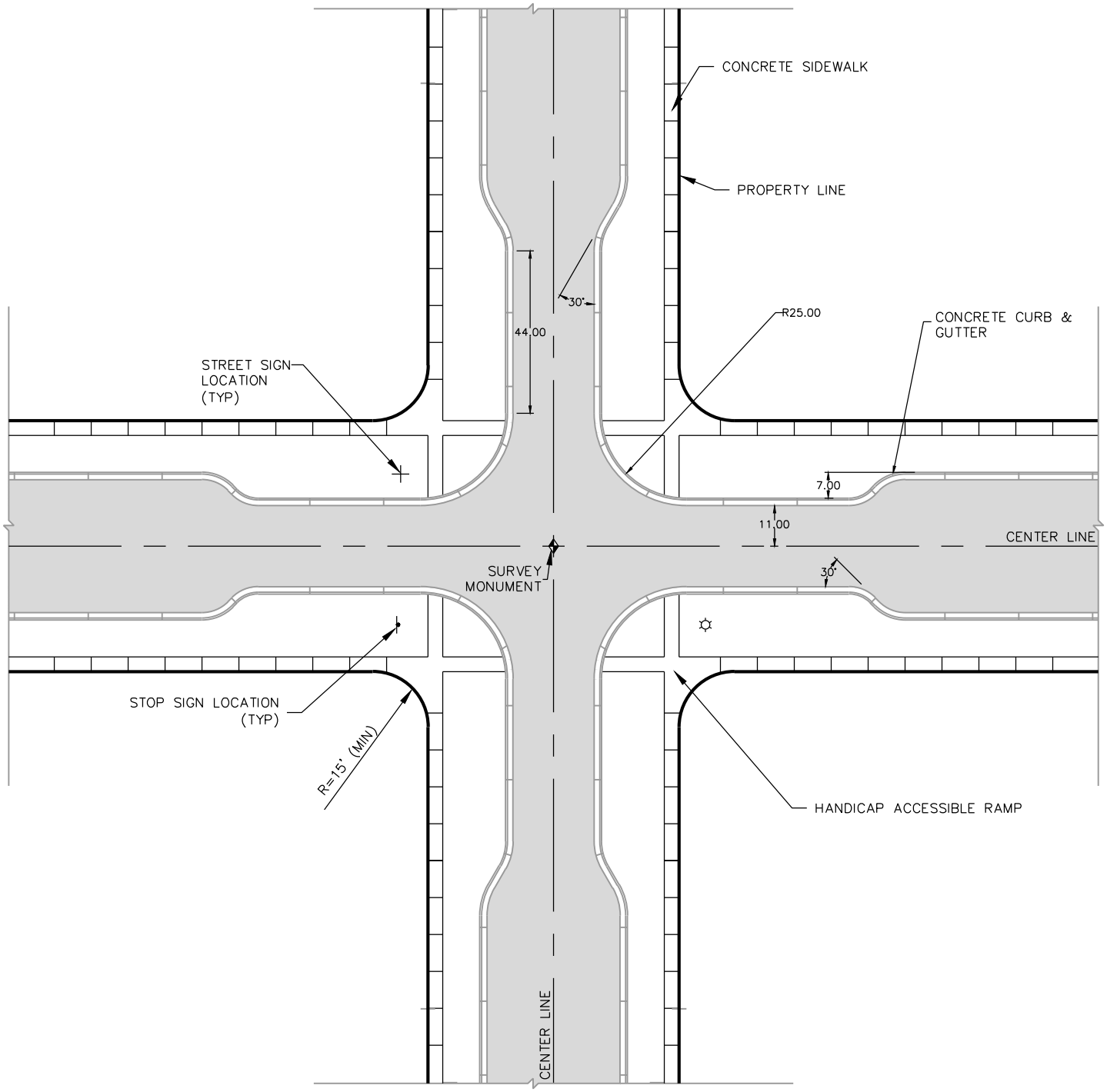

NOTES:

1. LAND DRAINS ARE UNACCEPTABLE UNLESS EXPLICITLY ALLOWED BY CITY ENGINEER. WHEN ALLOWED, PIPES SHALL NOT BE PERFORATED OR DESIGNED TO ACCEPT WATER WITHIN THE STREET RIGHT-OF-WAY.

2. CHECK ALL CITY STANDARDS FOR UTILITY LOCATIONS.

77' ROW NECKED INTERSECTION DETAIL

DATE: APRIL 2014

DRAWING NAME: ST-24

DRAWN BY: ETL

CHECKED: APPROVED:

REVISIONS

REV	DATE	BY	COMMENTS

SARATOGA SPRINGS CITY

1307 N. COMMERCE DR.
#200, SARATOGA SPRINGS,
UT 84045
PHONE: 801-766-9793
FAX: 8017669794

STANDARD DETAILS

STREET STANDARDS

ST-24

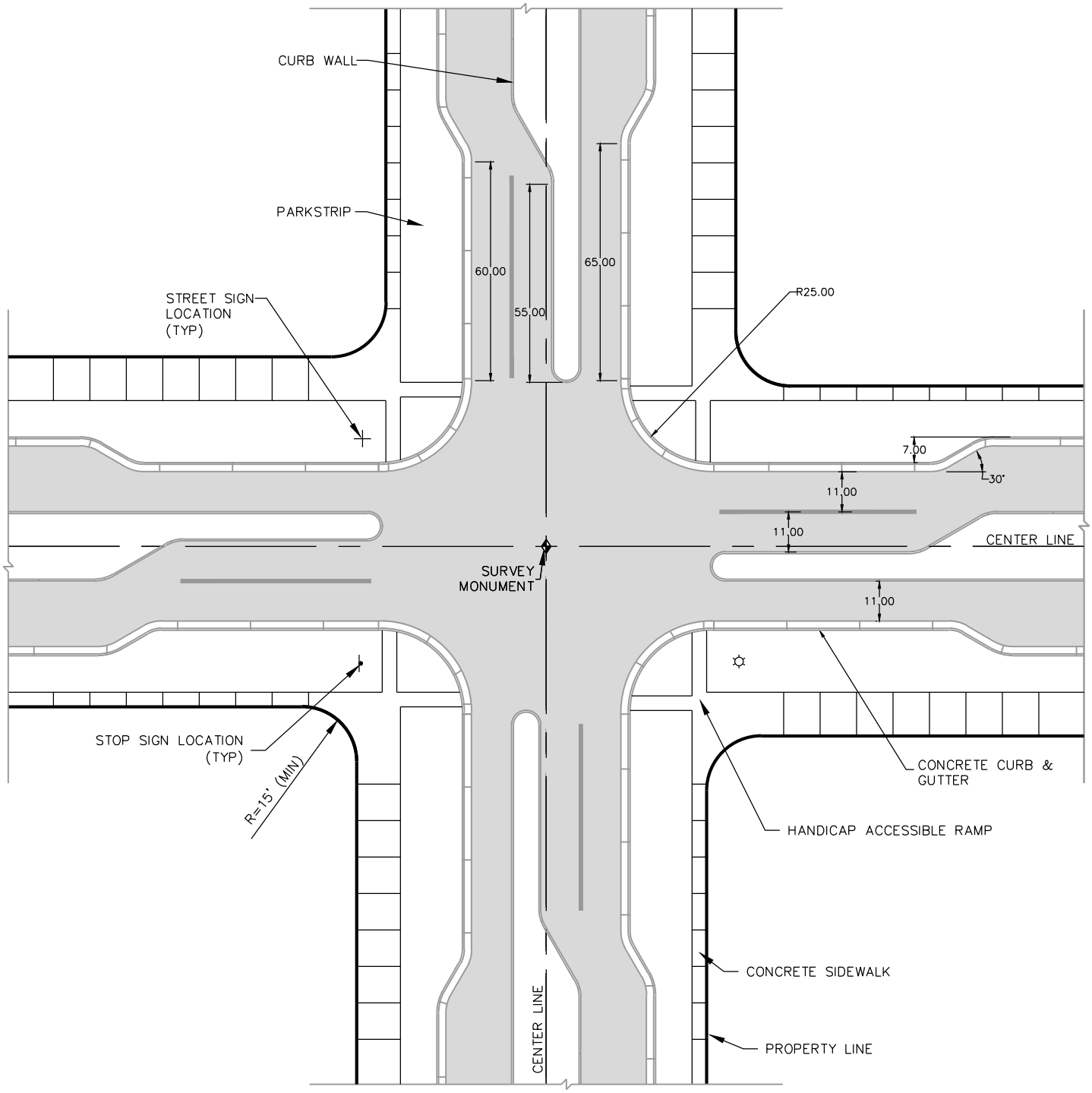

NOTES:

1. LAND DRAINS ARE UNACCEPTABLE UNLESS EXPLICITLY ALLOWED BY CITY ENGINEER. WHEN ALLOWED, PIPES SHALL NOT BE PERFORATED OR DESIGNED TO ACCEPT WATER WITHIN THE STREET RIGHT-OF-WAY.

2. CHECK ALL CITY STANDARDS FOR UTILITY LOCATIONS.

95' ROW NECKED INTERSECTION DETAIL

DATE: APRIL 2014

DRAWING NAME: ST-25

DRAWN BY:

CHECKED: APPROVED:

REVISIONS

REV	DATE	BY	COMMENTS

SARATOGA SPRINGS CITY

1307 N. COMMERCE DR.
#200, SARATOGA SPRINGS,
UT 84045
PHONE: 801-766-9793
FAX: 8017669794

STANDARD DETAILS

STREET STANDARDS

ST-25

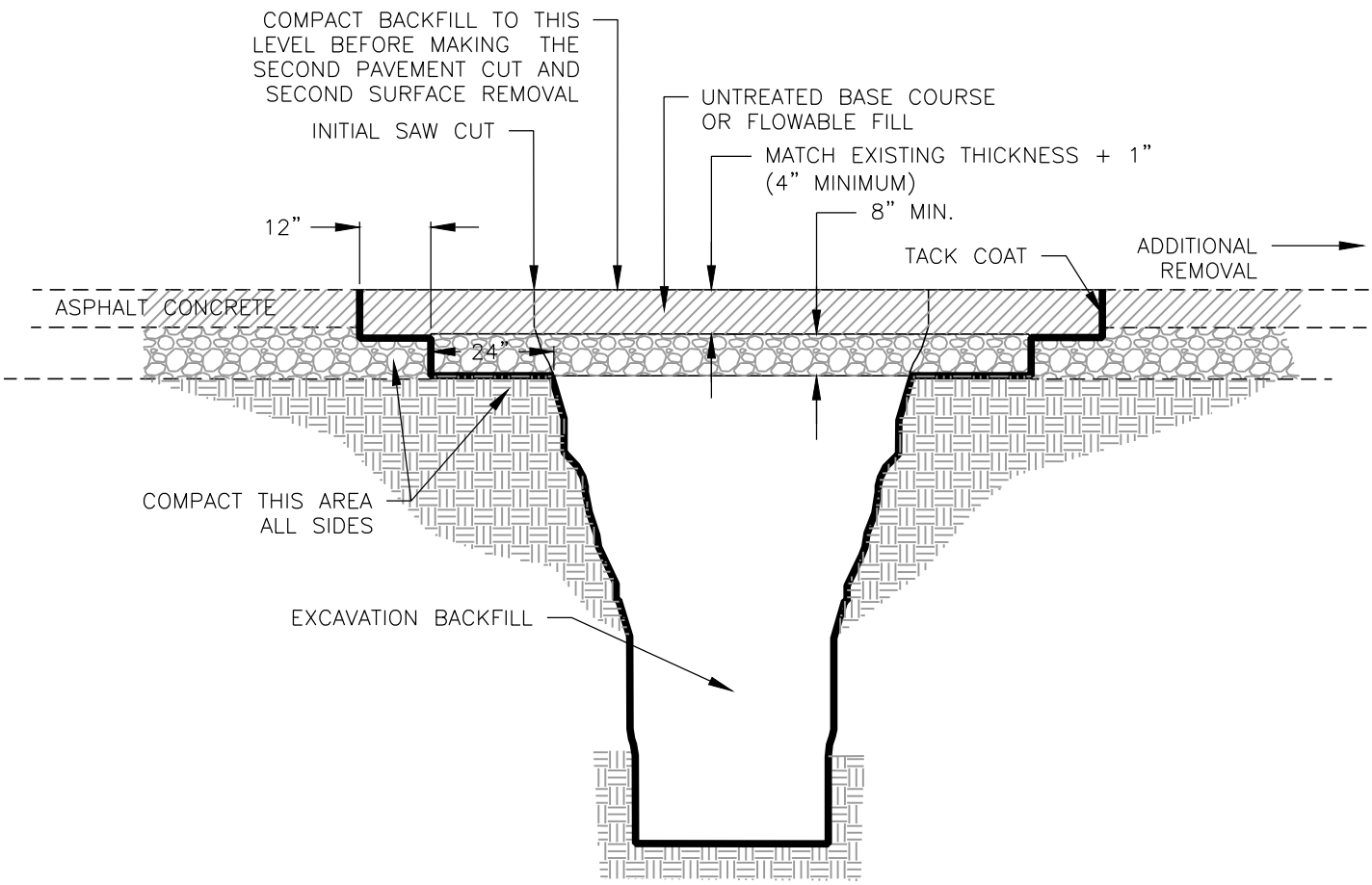

NOTES

1. ADDITIONAL PAVEMENT REMOVAL: REMOVE ADDITIONAL PAVEMENT TO A PAINTED LANE STRIPE, A LIP OF GUTTER, A CURB, AN EXISTING PAVEMENT PATCH OR AN EDGE OF THE PAVEMENT IF SUCH STREET FEATURE IS WITHIN 2 FEET OF THE SECOND SAW-CUT.

2. FLOWABLE FILL: PROVIDE 28 DAYS 60 PSI CONTROLLED LOW STRENGTH MATERIAL AS SPECIFIED IN APWA SECTION 31 05 15. USE FILL MATERIAL WHICH FLOWS EASILY AND VIBRATION IS NOT REQUIRED. CURE TO INITIAL SET BEFORE PLACING AGGREGATE BASE OR ASPHALT PAVEMENT. USE FLOWABLE FILL IN EXCAVATIONS THAT ARE TOO NARROW TO RECEIVE COMPACTION EQUIPMENT.

3. JOINT REPAIR: IF A CRACK OCCURS AT THE "T" PATCH CONNECTION TO EXISTING PAVEMENT OR AT ANY STREET FIXTURE, SEAL THE CRACK.

4. PATCH REPAIR: REPAIR THE ASPHALT PAVEMENT PATCH IF ANY OF THE FOLLOWING CONDITIONS OCCUR WITHIN THE PATCH

   A. PAVEMENT SURFACE DISTORTION EXCEEDS ¼" DEVIATION IN 10 FEET. REPAIR OPTION: PLANE OFF SURFACE DISTORTIONS. COAT PLANED SURFACES WITH CATIONIC OR ANIONIC EMULSION AND PROVIDE SAND BLOTTER.
   B. CRACK AT LEAST 1-FOOT LON AND ¼ INCH WIDE OCCUR MORE OFTEN THAN 1 IN 10 SQUARE FEET.
   C. REPAIR OPTION: CRACK SEAL.
   D. ASPHALT RAVELING IS GREATER THAN 1 SQUARE FOOT PER 100 SQUARE FEET. REPAIR OPTION: MILL AND INLAY

STANDARD TEE PATCH

DATE:	APRIL 2014
DRAWING NAME:	ST-26
DRAWN BY:	ETL
CHECKED:	APPROVED:

REVISIONS

REV	DATE	BY	COMMENTS

SARATOGA SPRINGS CITY

1307 N. COMMERCE DR.
#200, SARATOGA SPRINGS,
UT 84045
PHONE: 801-766-9793
FAX: 8017669794

STANDARD DETAILS

STREET STANDARDS

ST-26

NOTES:

1. MARKERS MUST BE PLACED AT ALL "OFFSITE" UTILITIES. PLACE AT MANHOLES AND EVERY 500' ON ALL UNDERGROUND UTILITIES.

2. MANHOLE MARKERS: MARKERS SHALL BE MANUFACTURED OF FIBER REINFORCED COMPOSITE MATERIAL. THAT REINFORCEMENT SHALL BE COMPRISED OF BOTH LINEAL STRANDS AND HORIZONTAL MESH MATS. MARKERS HALL BE FLAT WITH ROUNDED RIB DOWN THE CENTER AND RAILS ON EACH SIDE; SHALL BE AT LEAST 3-3/4" WIDE AND AT LEAST 66" TALL.

3. MARKERS SHALL BE CAPABLE OF WITHSTANDING A MINIMUM OF 10 VEHICLE IMPACTS AT 55 MPH WITH A CAR BUMPER.

4. MARKERS SHALL BE COATED WITH A COLORED COATING THAT WILL TOTALLY PREVENT ULTRA-VIOLET LIGHT FROM REACHING THE RESIN PORTION OF THE MARKER. COATING SHALL NOT FADE, PEEL, OR BLISTER AFTER A MINIMUM OF 2000 HOURS IN A QUV WEATHEROMETER.

5. STANDARD SIZE, HIGH VISIBILITY DECALS SHALL BE PLACED ON EACH SIDE OF THE MARKER. THE DECALS SHALL INCLUDE: THE INTERNATIONAL "NO-DIG" SYMBOL; FEDERAL LAW WARNING TO DETER VANDALS; THE WARNING MESSAGE, TO INCLUDE "WARNING", THE TYPE OF UTILITY AND "SARATOGA SPRINGS, CALL 776-9793.

6. COLORS SHALL BE AS FOLLOWS PER APWA SPECIFICATIONS:

RED: ELECTRIC POWER LINES, CABLES, CONDUIT AND LIGHTING CABLES

YELLOW: GAS, OIL, STEAM, PETROLEUM OR GASEOUS MATERIALS

ORANGE: COMMUNICATIONS, ALARM, SIGNAL, CABLES OR CONDUITS

BLUE: POTABLE WATER

PURPLE: RECLAIMED WATER, IRRIGATION AND SLURRY LINES

GREEN: SEWER AND STORM DRAIN LINES

UTILITY MARKERS

DATE: **APRIL 2014**

DRAWING NAME: **ST-27**

DRAWN BY: **ETL**

CHECKED: APPROVED:

REVISIONS

REV	DATE	BY	COMMENTS

SARATOGA SPRINGS CITY

1307 N. COMMERCE DR.
#200, SARATOGA SPRINGS,
UT 84045
PHONE: 801-766-9793
FAX: 8017669794

STANDARD DETAILS

STREET STANDARDS

ST-27

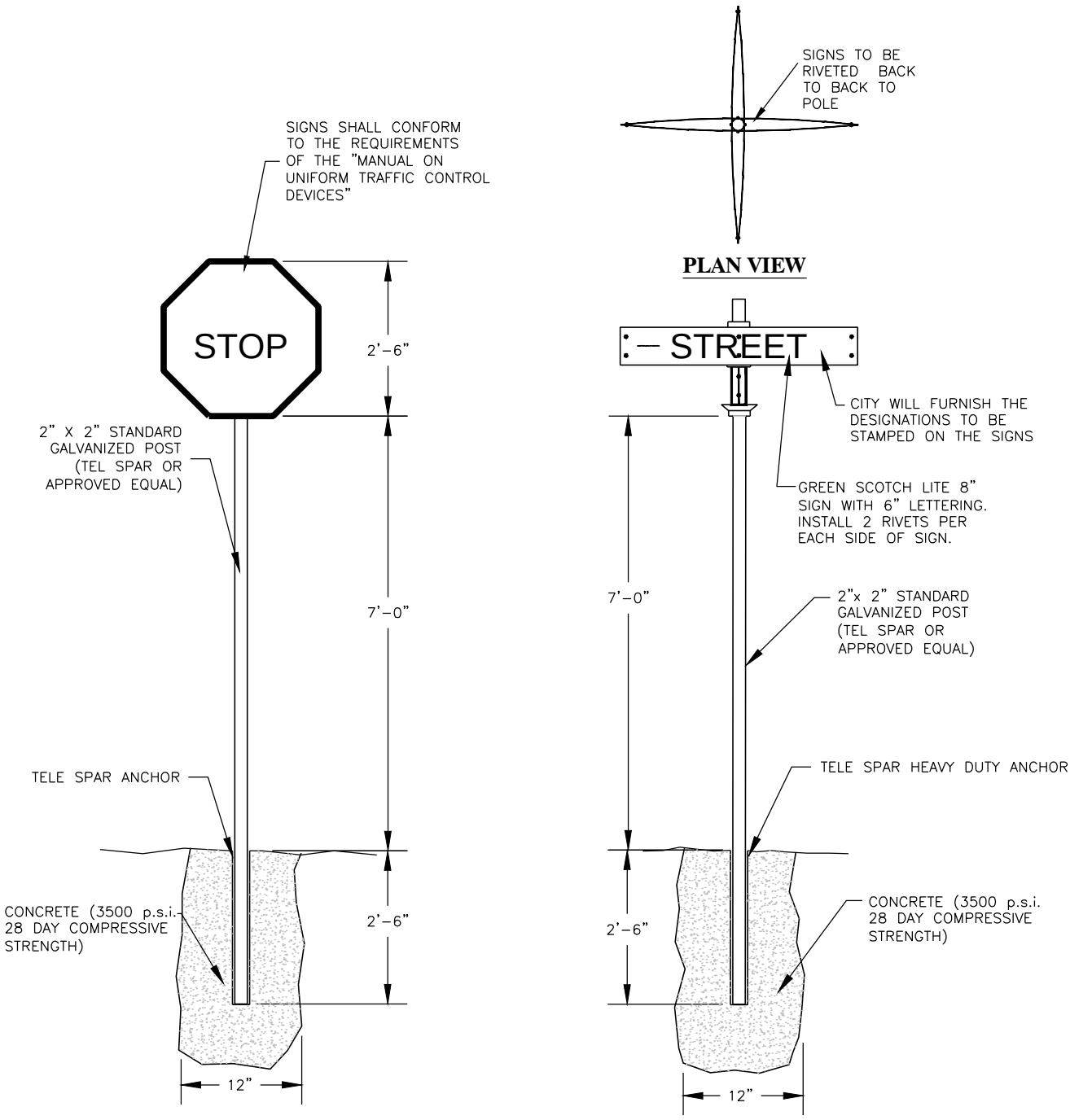

NOTES:

1. SECURE CITY'S APPROVAL OF SIGN FORMAT AND INSTALLATION.

2. INSTALL THE EDGE OF THE SIGN TWO FEET FROM THE VERTICAL EXTENSION OF THE BACK OF CURB AS NEAR AS POSSIBLE TO THE APPROACH CURB POINT OF CURVATURE. SIGNS SHOULD NOT OVERHANG SIDEWALK OR CURB & GUTTER.

3. ALL STREET SIGNS (STOP, SPEED, ETC.) SHALL BE 7' MINIMUM FROM GROUND TO BOTTOM OF SIGN.

4. ALL STREET SIGNS TO BE COATED WITH 3M-HIGH INTENSITY SHEETING, OR ACCEPTABLE EQUAL.

STREET AND REGULATORY SIGNS

DATE:	APRIL 2014
DRAWING NAME:	ST-28
DRAWN BY:	ETL
CHECKED:	APPROVED:

REVISIONS

REV	DATE	BY	COMMENTS

SARATOGA SPRINGS CITY

1307 N. COMMERCE DR.
#200, SARATOGA SPRINGS,
UT 84045
PHONE: 801-766-9793
FAX: 8017669794

STANDARD DETAILS

STREET STANDARDS

ST-28

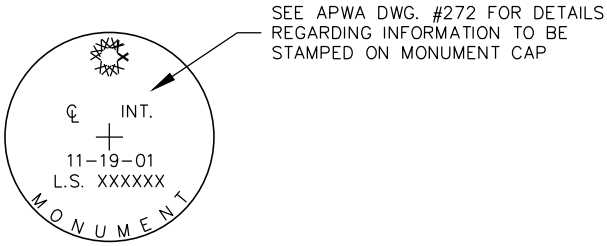

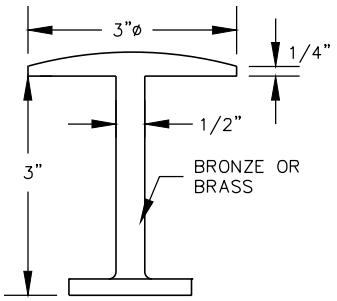

DETAIL 'B'

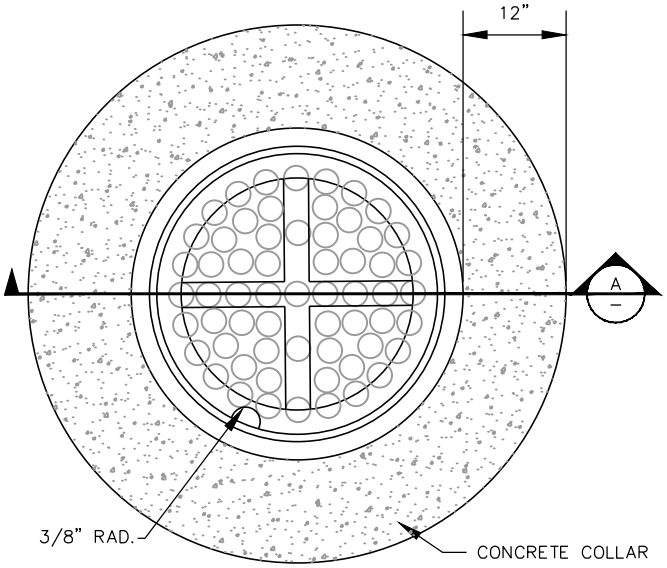

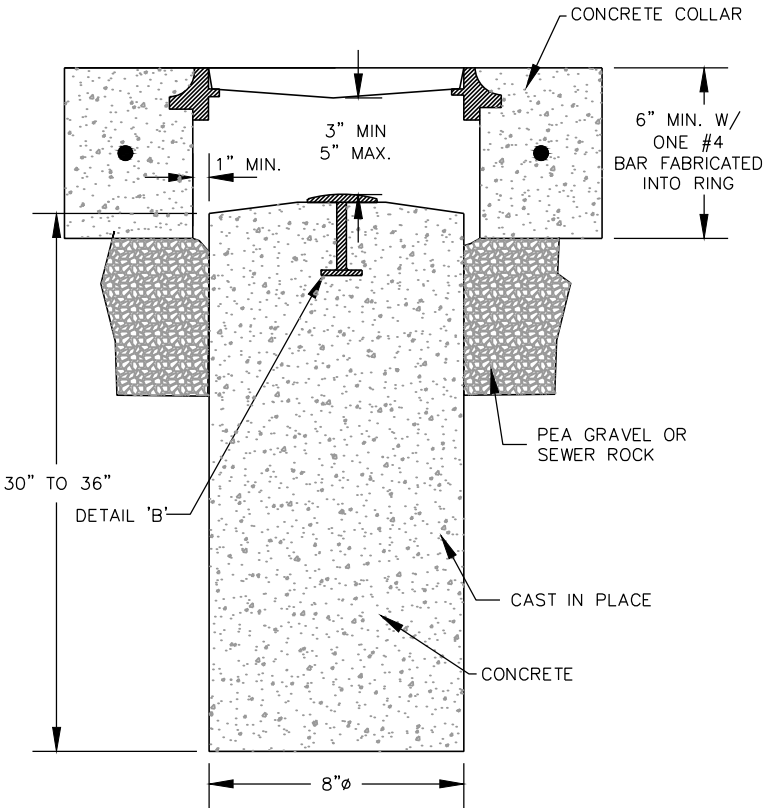

SECTION 'A'

NOTES:

ALL WORK SHALL CONFORM TO APWA STANDARDS UNLESS OTHERWISE APPROVED BY CITY ENGINEER

SURVEY MONUMENT TYPE 1

DATE:	APRIL 2014
DRAWING NAME:	ST-29
DRAWN BY:	ETL
CHECKED:	APPROVED:

REVISIONS

REV	DATE	BY	COMMENTS

SARATOGA SPRINGS CITY

1307 N. COMMERCE DR.
#200, SARATOGA SPRINGS,
UT 84045
PHONE: 801-766-9793
FAX: 8017669794

STANDARD DETAILS

STREET STANDARDS

ST-29

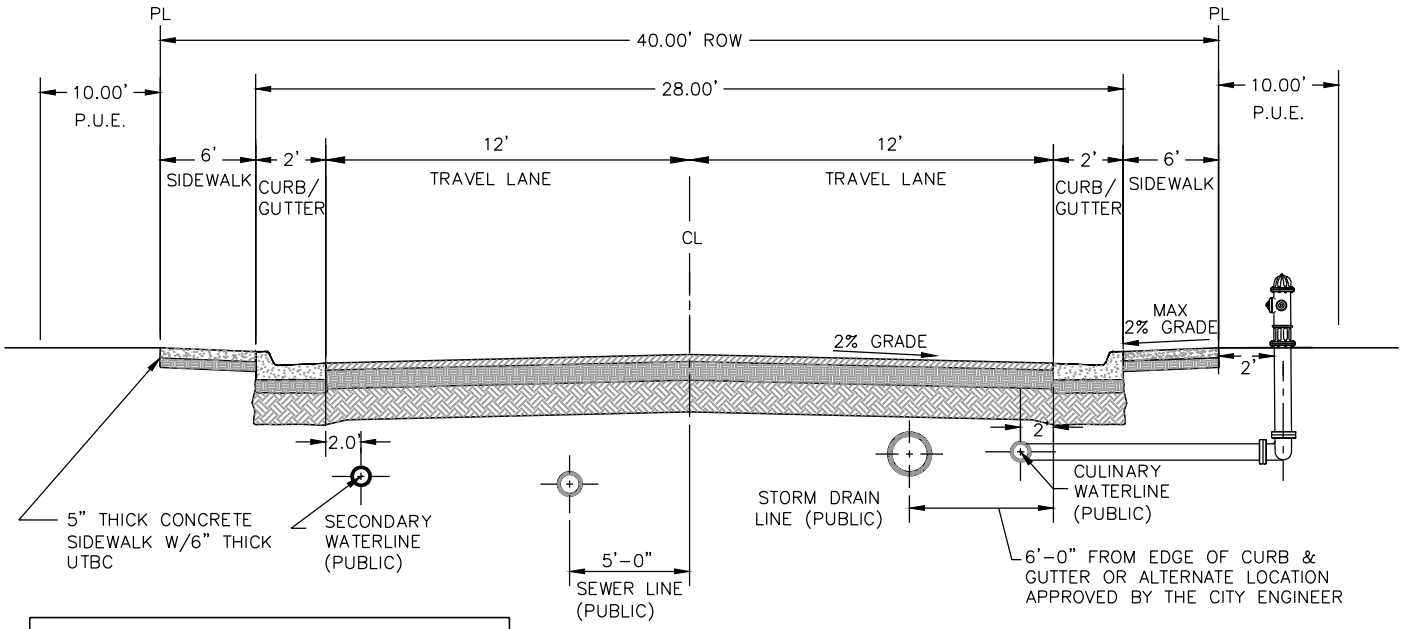

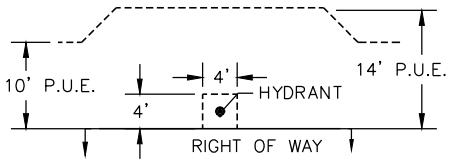

P.U.E FIRE HYDRANT DETAIL

NOTES:

1. THIS ROW CROSS SECTION SHALL BE PERMITTED FOR PRIVATE ROAD CROSS SECTIONS IN THE FOLLOWING ZONES: R-10, R-14, R-18, NC, MU, RC, OW, I, ML, BP, PC, AND IC.

2. MAXIMUM DIFFERENCE IN ELEVATION BETWEEN CURB ON OPPOSITE SIDES OF STREET SHALL NOT EXCEED 1'-0"

3. PAVEMENT DESIGN SHALL BE BASED ON BY A SOILS REPORT AS PER CITY STANDARDS.

4. PROVIDE A MINIMUM 6" THICKNESS UTBC UNDER SIDEWALKS, DRIVEWAY APPROACHES, AND CURB & GUTTER.

5. INSTALL TYPE 2 SLURRY SEAL ON ALL HMA UPON COMPLETION OF PAVING AND PRIOR TO ACCEPTANCE OF ROADS.

6. HOUSES MAY FRONT ON THESE STREETS.

7. MODIFIED CURB AND GUTTER MAY BE PERMITTED ONLY WHEN THE SPACING BETWEEN DRIVEWAYS IS LESS THAN 50 FEET AS MEASURED FROM EDGE TO EDGE. IF MODIFIED CURB AND GUTTER IS PERMITTED, THE TRAVEL LANES SHALL BE REDUCED TO 11.5' TO ACCOMMODATE LONGER CURB AND GUTTER CROSS SECTION.

8. P.U.E. SHALL JOG AROUND ALL HYDRANT LOCATIONS.

DESIGN CRITERIA

DESIGN SPEED: 25 M.P.H.

MIN CENTERLINE RADIUS: 200' MIN.

VERTICAL CURVE REQUIREMENTS: SAG K VALUE = 37

CREST K VALUE = 20

MODIFIED
FALL-OUT CURB AND GUTTER

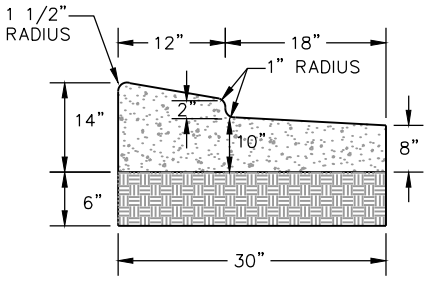

MODIFIED
CATCH CURB AND GUTTER

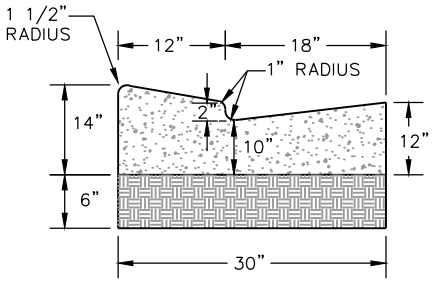

PRIVATE ROADWAY W/O PARK STRIP 40' RIGHT-OF-WAY

DATE: APRIL 2014	
DRAWING NAME: ST-30	
DRAWN BY: ETL	
CHECKED:	APPROVED:

REVISIONS

REV	DATE	BY	COMMENTS

SARATOGA SPRINGS CITY

1307 N. COMMERCE DR.
#200, SARATOGA SPRINGS,
UT 84045
PHONE: 801-766-9793
FAX: 8017669794

STANDARD DETAILS

STREET STANDARDS

ST-30

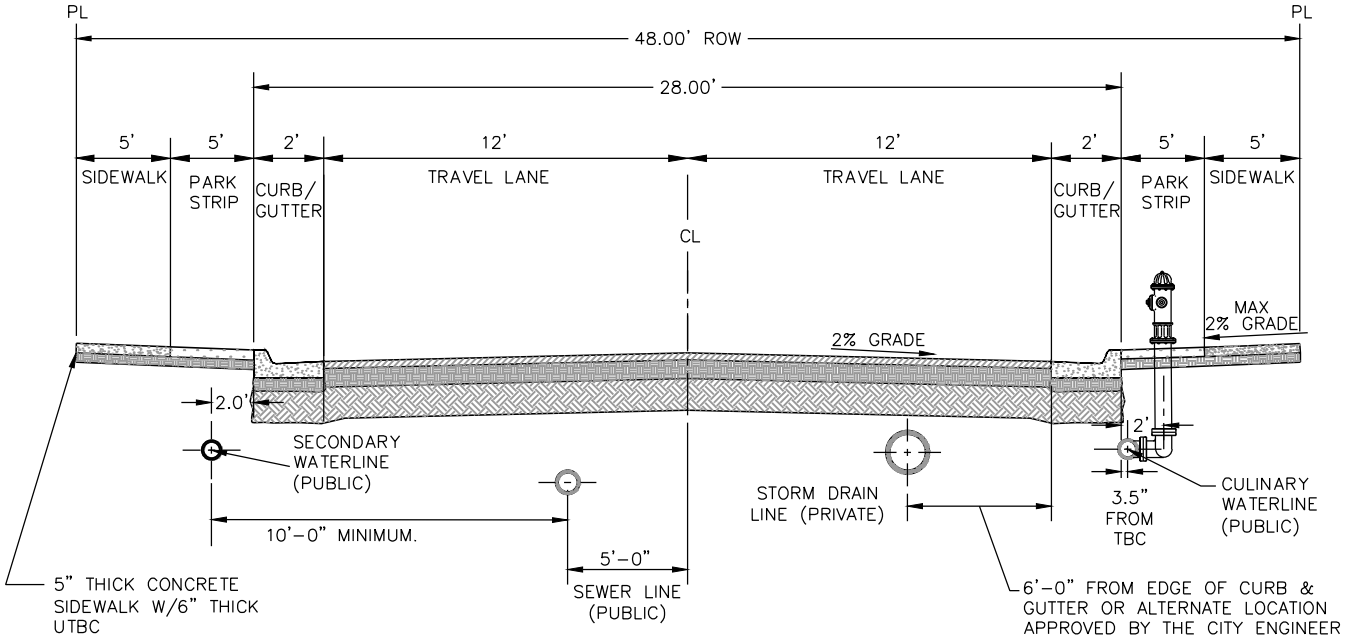

NOTES:

1. THIS ROW CROSS SECTION SHALL BE PERMITTED FOR PRIVATE ROAD CROSS SECTIONS IN THE FOLLOWING ZONES: R-5, R-6, R-10, R-14, R-18, NC, MU, RC, OW, I, ML, BP, PC AND IC.
2. MAXIMUM DIFFERENCE IN ELEVATION BETWEEN CURB ON OPPOSITE SIDES OF STREET SHALL NOT EXCEED 1'-0"
3. PAVEMENT DESIGN SHALL BE BASED ON A SOILS REPORT AS PER CITY STANDARDS.
4. PROVIDE A MINIMUM 6" THICKNESS UTBC UNDER SIDEWALKS, DRIVEWAY APPROACHES, AND CURB & GUTTER.
5. INSTALL TYPE 2 SLURRY SEAL ON ALL HMA UPON COMPLETION OF PAVING AND PRIOR TO ACCEPTANCE OF ROADS.
6. HOUSES MAY FRONT ON THESE STREETS.

DESIGN CRITERIA

DESIGN SPEED: 25 M.P.H.

MIN CENTERLINE RADIUS: 200' MIN.

VERTICAL CURVE REQUIREMENTS: SAG K VALUE = 37

CREST K VALUE = 20

PRIVATE ROADWAY W/ PARK STRIP 48' RIGHT-OF-WAY

DATE: APRIL 2014

DRAWING NAME: ST-31

DRAWN BY: ETL

CHECKED: APPROVED:

REVISIONS

REV	DATE	BY	COMMENTS

SARATOGA SPRINGS CITY

1307 N. COMMERCE DR. #200, SARATOGA SPRINGS, UT 84045
PHONE: 801-766-9793
FAX: 8017669794

STANDARD DETAILS

STREET STANDARDS

ST-31

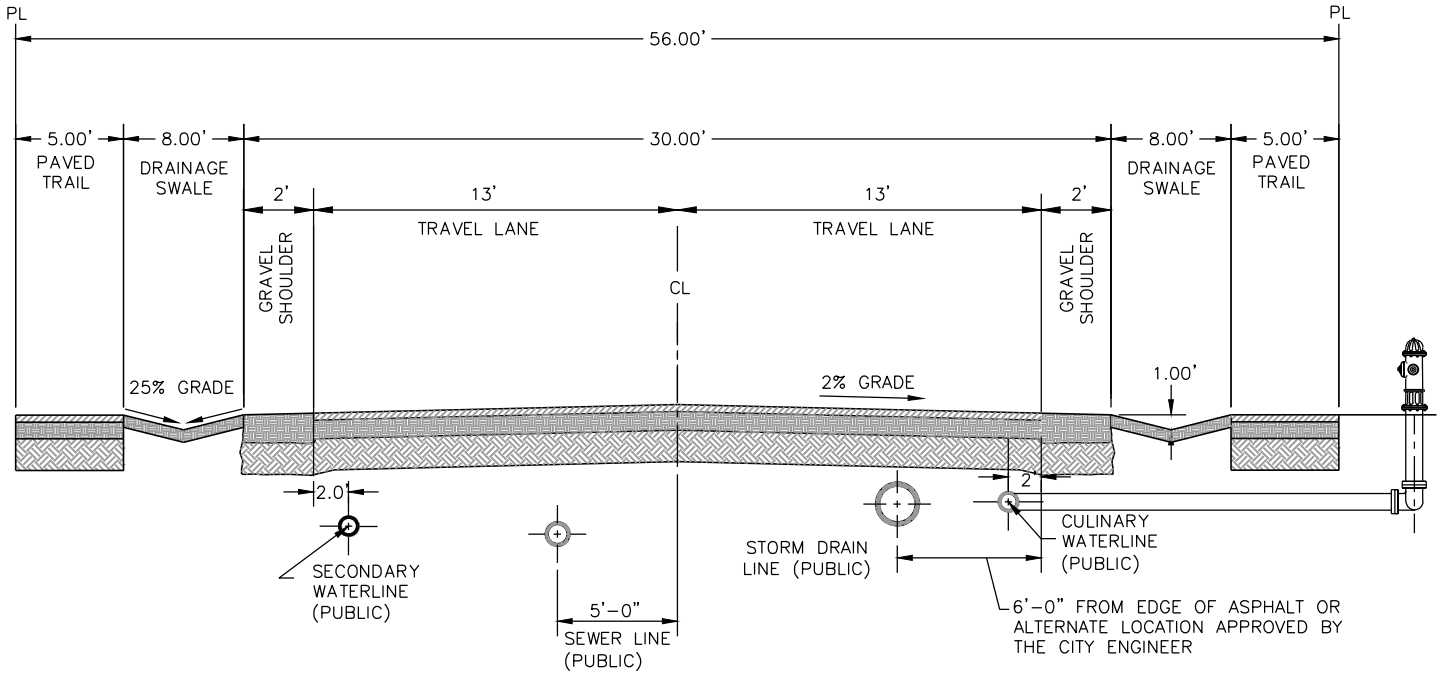

NOTES:

1. THIS ROW CROSS SECTION SHALL BE PERMITTED FOR PRIVATE ROAD CROSS SECTIONS IN THE FOLLOWING ZONES: A, RA-5, R-1, AND RR.

2. MAXIMUM DIFFERENCE IN ELEVATION BETWEEN SWALE ON OPPOSITE SIDES OF STREET SHALL NOT EXCEED 1'-0"

3. PAVEMENT DESIGN SHALL BE BASED ON A SOILS REPORT AND AS PER CITY STANDARDS.

4. INSTALL TYPE 2 SLURRY SEAL ON ALL HMA UPON COMPLETION OF PAVING AND PRIOR TO ACCEPTANCE OF ROADS.

5. HOUSES MAY FRONT ON THESE STREETS.

6. A FIVE FOOT ASPHALT OR CONCRETE TRAIL MUST BE PROVIDED BOTH SIDE OF THE STREET. TRAILS ARE NOT REQUIRED IN DEVELOPMENTS WITH 5 ACRE LOTS OR LARGER

DRIVE APPROACH SWALE CROSS SECTION

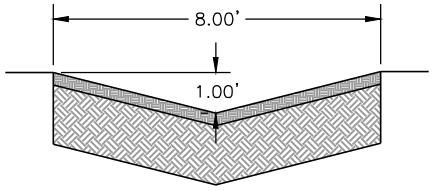

DRIVE APPROACHES SHALL HAVE BASE COURSE AND GRANULAR BORROW CONSISTENT WITH PAVEMENT DESIGN

DESIGN CRITERIA

DESIGN SPEED: 25 M.P.H.

MIN CENTERLINE RADIUS: 200' MIN.

VERTICAL CURVE REQUIREMENTS: SAG K VALUE = 37

CREST K VALUE = 20

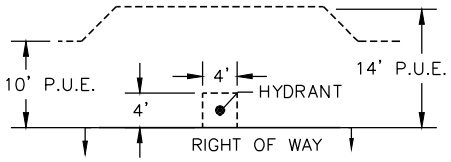

P.U.E FIRE HYDRANT DETAIL

PRIVATE ROADWAY RURAL 56' RIGHT-OF-WAY

DATE: APRIL 2014	
DRAWING NAME: ST-32	
DRAWN BY: ETL	
CHECKED:	APPROVED:

REVISIONS

REV	DATE	BY	COMMENTS

SARATOGA SPRINGS CITY

1307 N. COMMERCE DR.
#200, SARATOGA SPRINGS,
UT 84045
PHONE: 801-766-9793
FAX: 8017669794

STANDARD DETAILS

STREET STANDARDS

ST-32

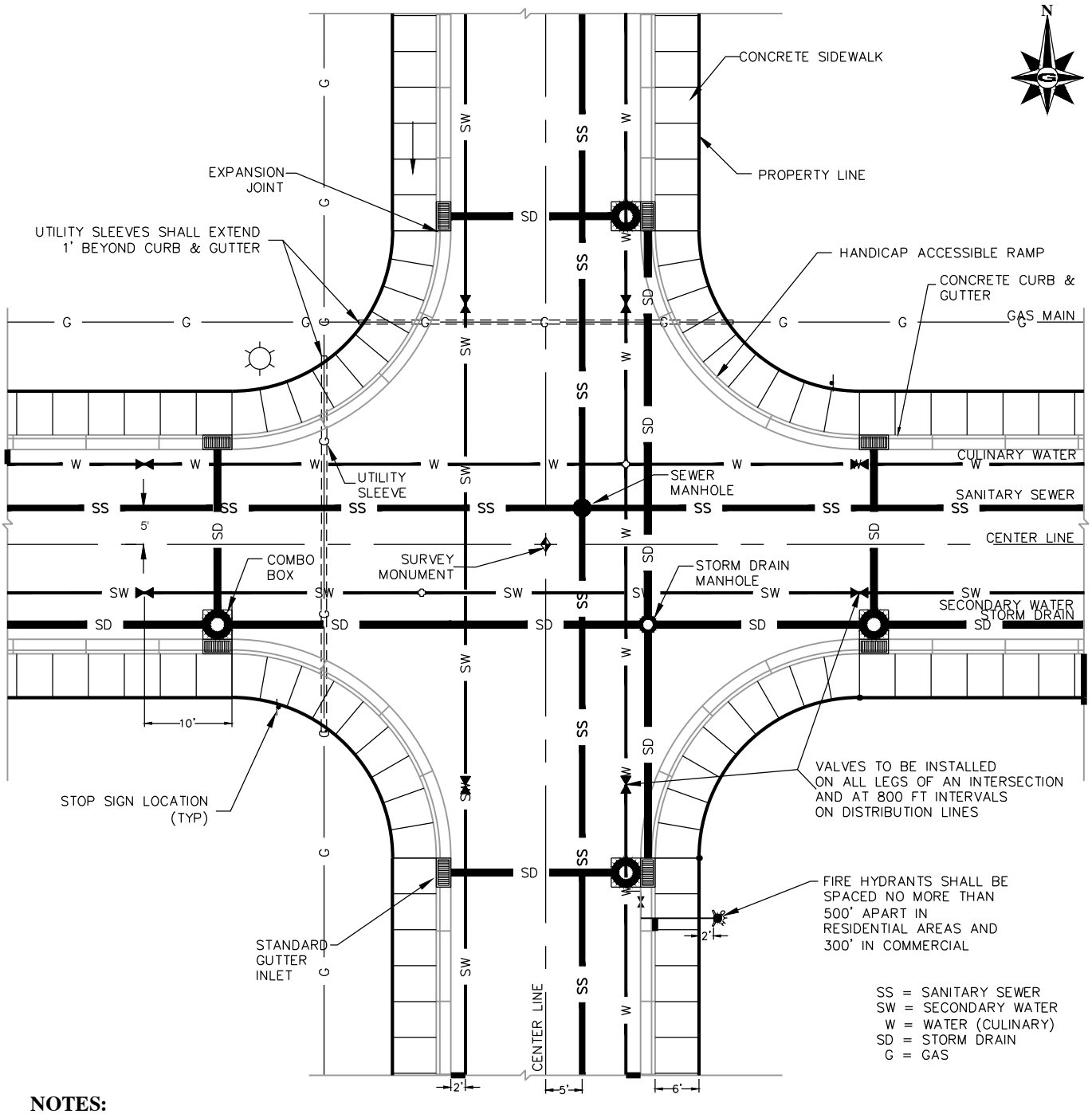

NOTES:

1. LAND DRAINS ARE UNACCEPTABLE UNLESS EXPLICITLY ALLOWED BY CITY ENGINEER. WHEN ALLOWED, PIPES SHALL NOT BE PERFORATED OR DESIGNED TO ACCEPT WATER WITHIN THE STREET RIGHT-OF-WAY.

2. CURB RADIUS ON LOCAL AND COLLECTOR RIGHT-OF-WAYS SHALL BE 25', ON MINOR ARTERIALS IT SHALL BE 35', AND ON MAJOR AND PRINCIPAL ARTERIALS SHALL BE 40' AS MEASURED FROM FACE OF CURB.

3. CHECK ALL CITY STANDARDS FOR UTILITY LOCATIONS.

4. STREET LIGHTS ARE TO BE PLACED AT INTERSECTIONS AND EVERY 300 FEET, ALTERNATING SIDES OF STREET.

5. WHERE INLET CONFLICTS WITH VALVE LOCATION, PLACE VALVE 10' BACK FROM POINT OF CURVATURE.

PRIVATE INTERSECTION & UTILITY DETAILS

DATE: APRIL 2014

DRAWING NAME: ST-33

DRAWN BY: ETL

CHECKED: APPROVED:

REVISIONS

REV	DATE	BY	COMMENTS

SARATOGA SPRINGS CITY

1307 N. COMMERCE DR.
#200, SARATOGA SPRINGS,
UT 84045
PHONE: 801-766-9793
FAX: 8017669794

STANDARD DETAILS

STREET STANDARDS

ST-33

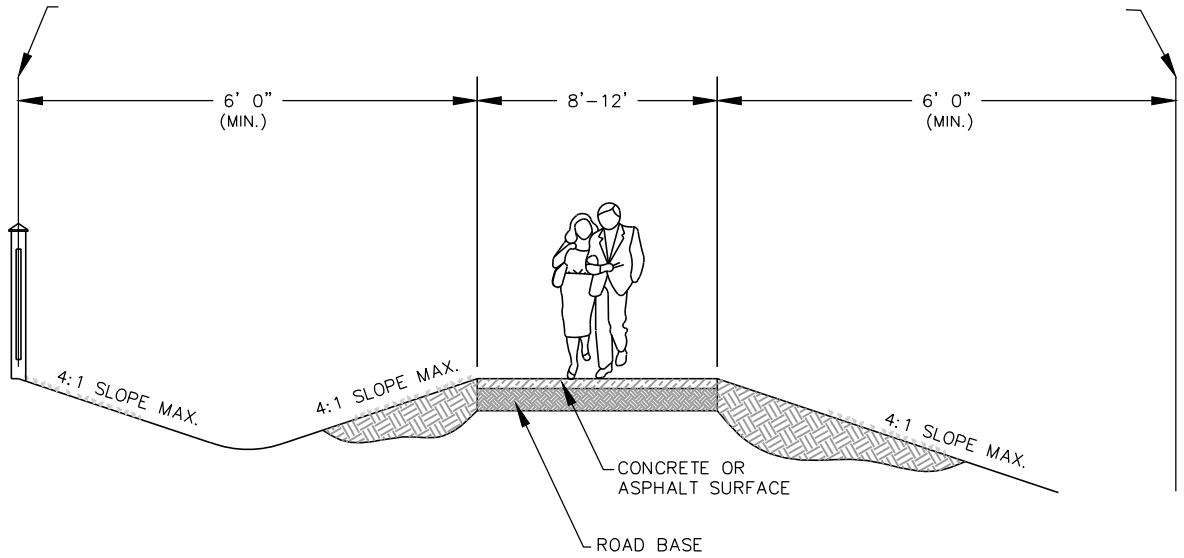

NOTES:

1. TRAILS ALONG ARTERIAL ROADWAYS, AND CANAL PARKWAYS SHALL BE 12' WIDE MEANDERING CONCRETE TRAILS.

2. TRAILS FOR LAKESIDE AND RIVERSIDE ACCESS MUST USE CONCRETE AND BE 12' WIDE.

3. IN RIPARIAN AREAS PROVIDE 8' CONCRETE TRAILS.

4. IN UPLAND AREAS PROVIDE 12' ASPHALT TRAILS.

5. FOR POWER LINE CORRIDORS, MOUNTAIN TRAILS, ATV TRAILS, AND EQUESTRIAN USE, PROVIDE 12' WIDE TRAILS WITH 8" OF ROAD BASE OR APPROVED SOFT-SURFACE MATERIAL.

6. FOR WILDERNESS TRAILS IN DEVELOPED AREAS PROVIDE 12' WIDE ASPHALT TRAILS.

6. FOR WILDERNESS TRAILS IN UNDEVELOPED AREAS PROVIDE 8'-10' WIDE TRAILS WITH 8" OF ROAD BASE OR APPROVED SOFT-SURFACE MATERIAL.

7. ALL TRAILS MUST BE ADA ACCESSIBLE AND PROVIDE MAINTENANCE ACCESS.

8. CENTER LINE RADIUS OF MEANDERING SIDEWALKS/TRAILS SHALL BE 100' MIN.

9. FOR CONCRETE TRAILS, PROVIDE CONSTRUCTION JOINTS @ 8' INTERVALS EXPANSION JOINTS @ 40 ' INTERVALS

10. CONCRETE TRAILS MUST HAVE 5" OF CONCRETE OVER 6" OF ROAD BASE.

11. ASPHALT TRAILS MUST HAVE 3" OF ASPHALT OVER 8" OF ROAD BASE.

TRAILS

DATE: **APRIL 2014**

DRAWING NAME: **ST-34**

DRAWN BY: **JMT**

CHECKED: APPROVED:

REVISIONS

REV	DATE	BY	COMMENTS

SARATOGA SPRINGS CITY

1307 N. COMMERCE DR.
#200, SARATOGA SPRINGS,
UT 84045
PHONE: 801-766-9793
FAX: 8017669794

STANDARD DETAILS

STREET STANDARDS

ST-34

STANDARD
LANDSCAPING DETAILS

INDEX:

LS-1 SPRINKLER SYSTEM MAINLINE ISOLATION VALVE 4" & LARGER
LS-2 SPRINKLER SYSTEM QUICK COUPLER VALVE
LS-3 SPRINKLER SYSTEM REMOTE CONTROL VALVE
LS-4 SPRINKLER SYSTEM STAINLESS STEEL CONTROLLER IN STRONG BOX
LS-5 SATELLITE SPRINKLER SYSTEM STAINLESS STEEL CONTROLLER
LS-6 SPRINKLER SYSTEM LARGE ROTARY HEAD POP-UP SPRINKLER DETAIL
LS-7 SPRINKLER SYSTEM MEDIUM & SMALL POP-UP SPRAY SPRINKLER DETAIL
LS-8 SPRINKLER SYSTEM MANUAL DRAIN DETAIL
LS-9 SPRINKLER SYSTEM SLEEVING DETAIL
LS-10 SPRINKLER SYSTEM PIPE/TRENCH DETAIL
LS-11 PIPE AND WIRE TRENCH DETAIL
LS-12 AUTOMATIC DRAIN DETAIL
LS-13 TREE STAKING/ PLANTING DETAIL
LS-14 VINYL FENCE WITH MOW STRIP

LANDSCAPING DETAILS

DATE: APRIL 2014
DRAWING NAME: LS-0
DRAWN BY: ETL
CHECKED:
APPROVED:

REVISIONS

REV	DATE	BY	COMMENTS

SARATOGA SPRINGS CITY

1307 N. COMMERCE DR.
#200, SARATOGA SPRINGS,
UT 84045
PHONE: 801-766-9793
FAX: 8017669794

STANDARD DETAILS

LANDSCAPING

LS-0

NOTE:

1. GATE VALVE SHALL MATCH NOMINAL SIZE OF MAINLINE PIPE.

2. NO MALE ADAPTORS

3. VALVES SMALLER THAN 4 INCHES SHALL BE BRASS FULL THROAT GATE VALVES

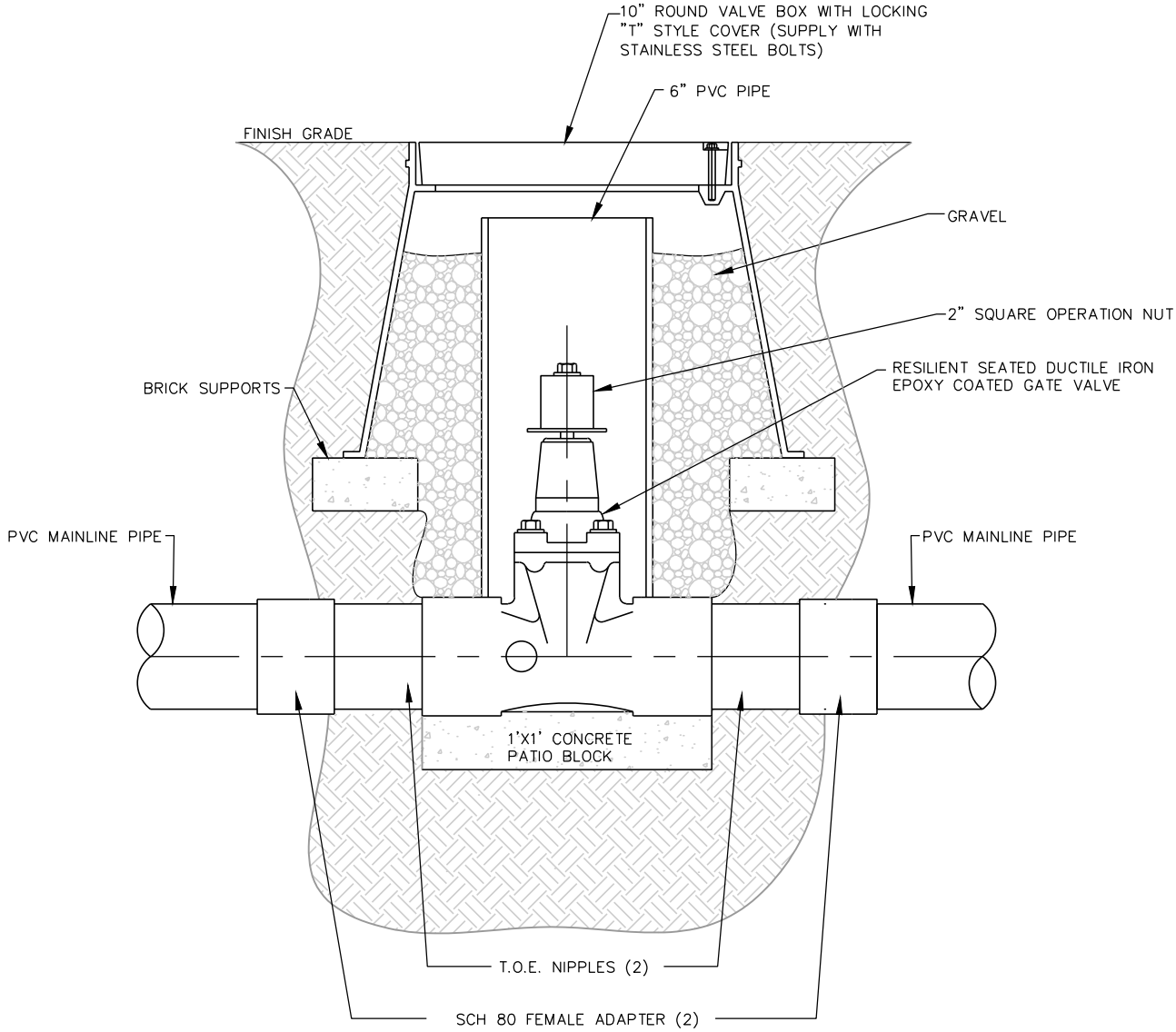

MAINLINE ISOLATION VALVE

SPRINKLER SYSTEM MAINLINE ISOLATION VALVE 4" AND LARGER

DATE:	APRIL 2014
DRAWING NAME:	LS-1
DRAWN BY:	ETL
CHECKED:	APPROVED:

REVISIONS

REV	DATE	BY	COMMENTS

SARATOGA SPRINGS CITY

1307 N. COMMERCE DR.
#200, SARATOGA SPRINGS, UT 84045
PHONE: 801-766-9793
FAX: 8017669794

STANDARD DETAILS

LANDSCAPING

LS-1

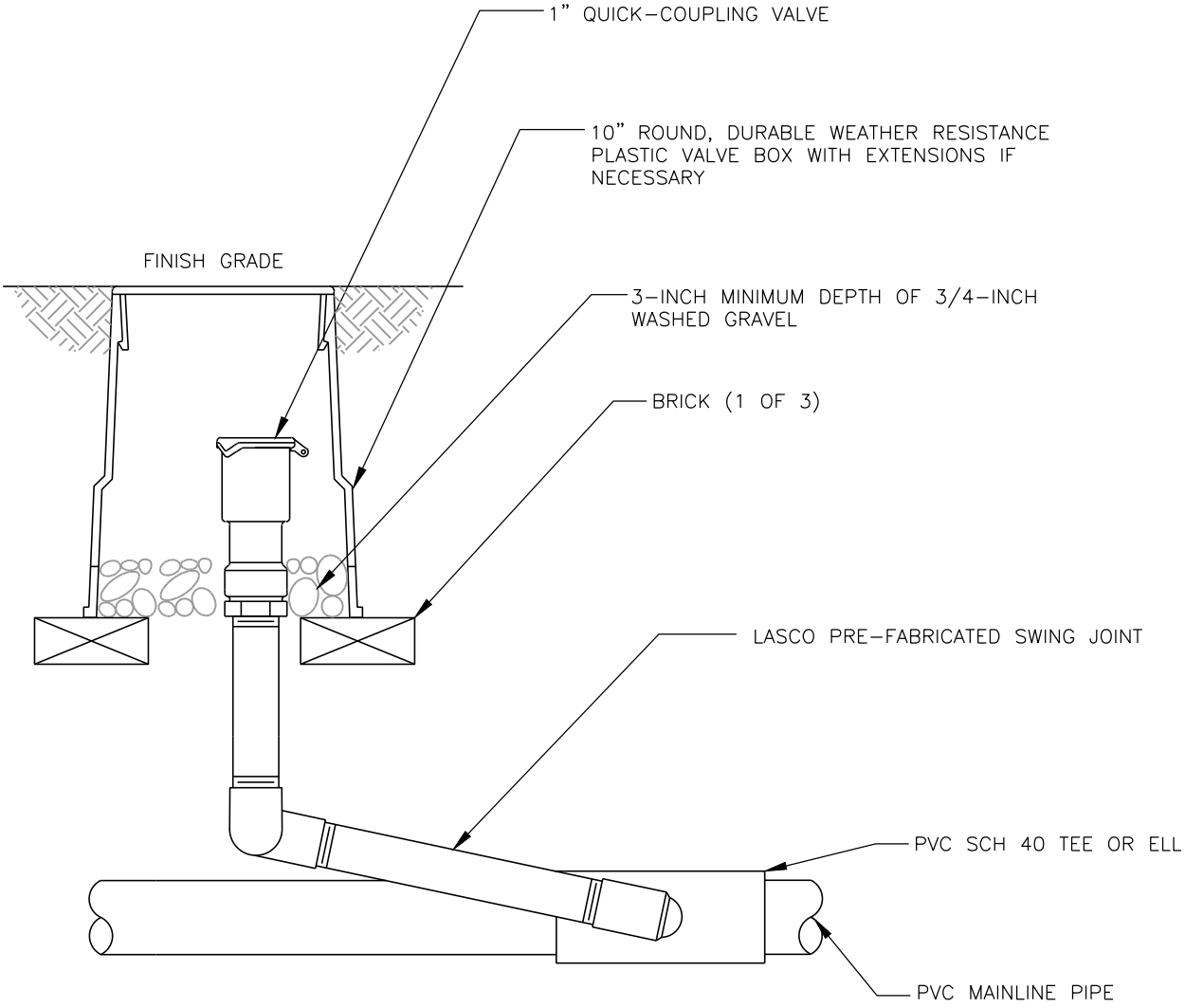

SPRINKLER SYSTEM QUICK COUPLER VALVE

DATE:	APRIL 2014
DRAWING NAME:	LS-2
DRAWN BY:	ETL
CHECKED:	APPROVED:

REVISIONS

REV	DATE	BY	COMMENTS

SARATOGA SPRINGS CITY

1307 N. COMMERCE DR.
#200, SARATOGA SPRINGS,
UT 84045
PHONE: 801-766-9793
FAX: 8017669794

STANDARD DETAILS

LANDSCAPING

LS-2

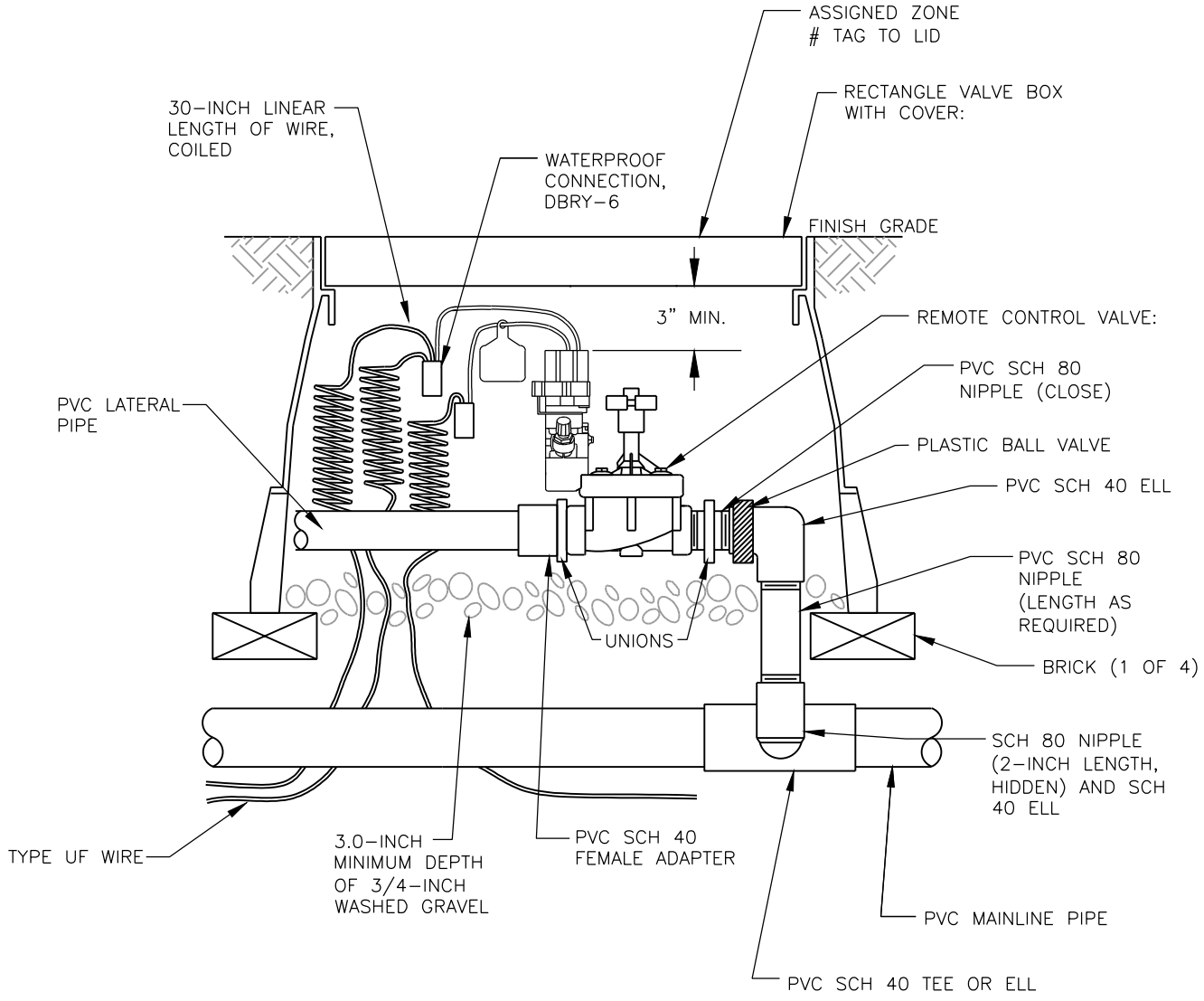

NOTES:

1. NO MALE ADAPTORS.
2. 1 VALVE PER BOX
3. NO ACTION MANUFACTURE FITTING

SPRINKLER SYSTEM REMOTE CONTROL VALVE

DATE:	APRIL 2014
DRAWING NAME:	LS-3
DRAWN BY:	ETL
CHECKED:	APPROVED:

REVISIONS

REV	DATE	BY	COMMENTS

SARATOGA SPRINGS CITY

1307 N. COMMERCE DR.
#200, SARATOGA SPRINGS,
UT 84045
PHONE: 801-766-9793
FAX: 8017669794

STANDARD DETAILS

LANDSCAPING

LS-3

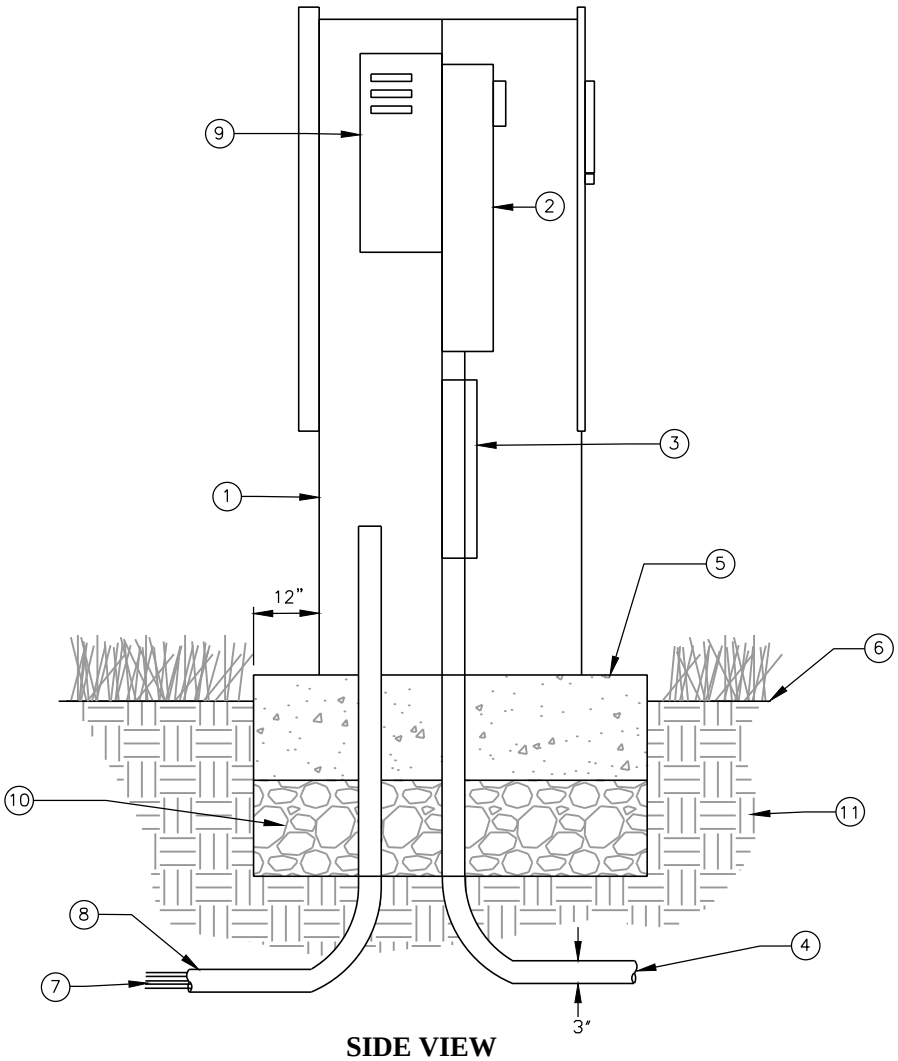

SIDE VIEW

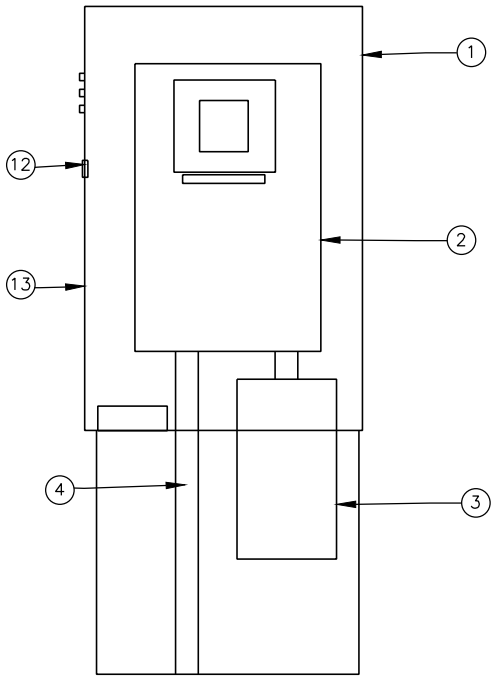

FRONT VIEW

NOTE:

GROUND LOW VOLTAGE WITH 3 GROUND ROD GRID 8 FEET APART

1. METERED CONTROLLER ENCLOSURE, MUST BE RMP APPROVED
2. METER SOCKET WITH TEST BLOCKS
3. LOAD CENTER
4. CONDUIT (NOT SUPPLIED) FOR LINE FEED INTO METER; 3" (MIN) SCH 40 GREY
5. POURED CONCRETE BASE 4" MIN. THICKNESS, EXTEND 12" BEYOND OUTSIDE DIMENSIONS OF ENCLOSURE WITH 0.5% MIN. SLOPE FOR DRAINAGE
6. FINISH GRADE
7. DIRECT BURIAL CONTROL WIRES TO CONTROL VALVES
8. PVC LONG SWEEP ELL – USE ONE SWEEP 3" ELL PER CONTROLLER INSTALL ONE EXTRA 3" ELL FOR FUTURE USE
9. AUTOMATIC CONTROLLERS – REMOVE FRONT DOORS OF CONTROLLERS AND PLACE SIDE BY SIDE; HUNTER ACC W/ ALL IMMS RADIO CONTROL AND COMMUNICATION DEVICES
10. 6" MIN. ROAD BASE
11. SUBGRADE COMPACTED TO 95%
12. INSTALL SMART PORT THROUGH WALL OF STRONG BOX.
13. ENCLOSURE TO BE STAINLESS STEEL STRONG BOX, OR ACCEPTABLE EQUAL

METER & CONTROLLER STAINLESS STEEL ENCLOSURE

DATE:	APRIL 2014
DRAWING NAME:	LS-4
DRAWN BY:	ETL
CHECKED:	APPROVED:

REVISIONS

REV	DATE	BY	COMMENTS

SARATOGA SPRINGS CITY

1307 N. COMMERCE DR.
#200, SARATOGA SPRINGS,
UT 84045
PHONE: 801-766-9793
FAX: 8017669794

STANDARD DETAILS

LANDSCAPING

LS-4

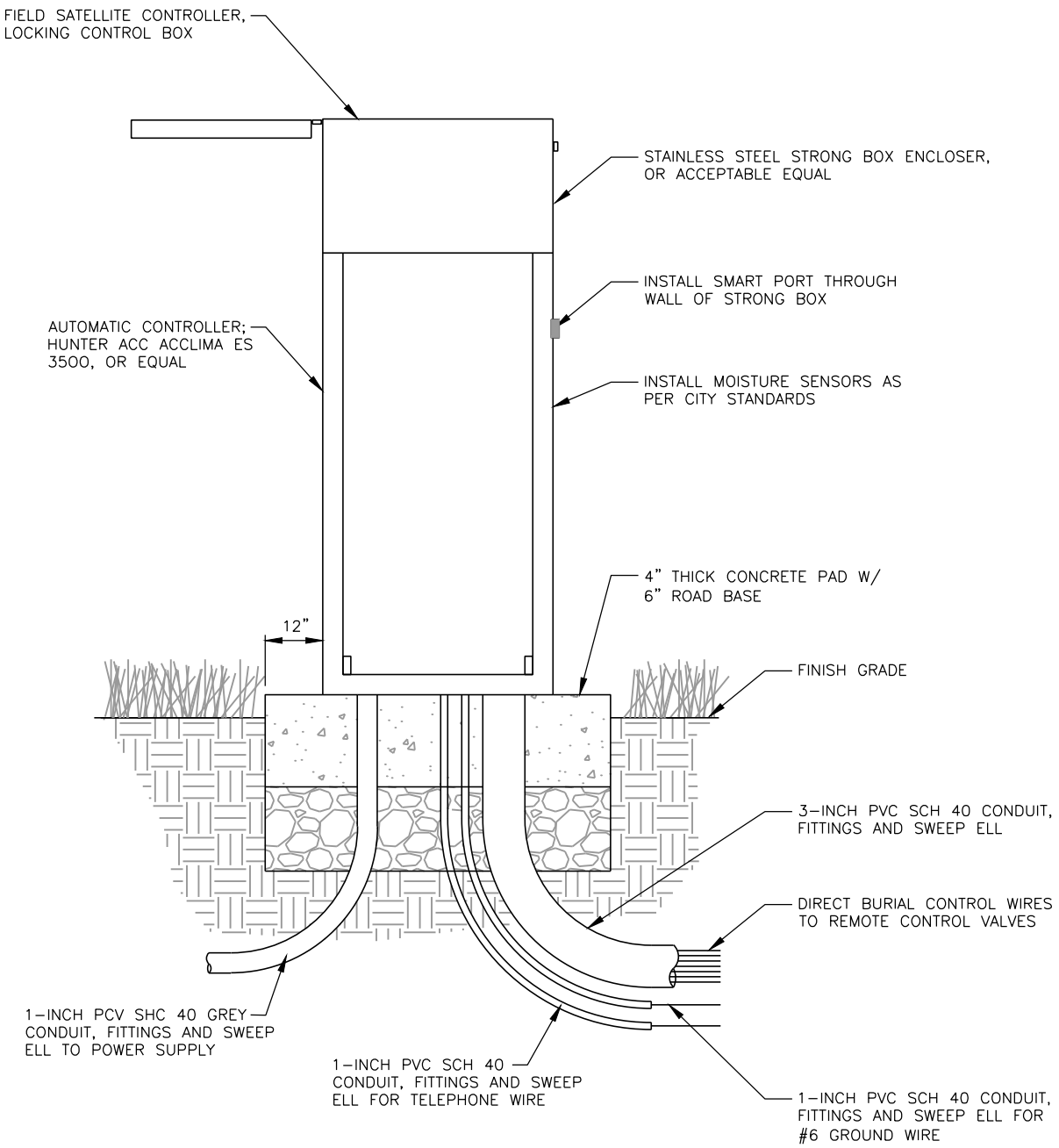

NOTE:

INSTALL HUNTER ACC WITH ALL IMMS RADIO CONTROL AND COMMUNICATION DEVICES

SATELLITE STAINLESS STEEL CONTROLLER ENCLOSURE

DATE:	APRIL 2014
DRAWING NAME:	LS-5
DRAWN BY:	ETL
CHECKED:	APPROVED:

REVISIONS

REV	DATE	BY	COMMENTS

SARATOGA SPRINGS CITY

1307 N. COMMERCE DR.
#200, SARATOGA SPRINGS,
UT 84045
PHONE: 801-766-9793
FAX: 8017669794

STANDARD DETAILS

LANDSCAPING

LS-5

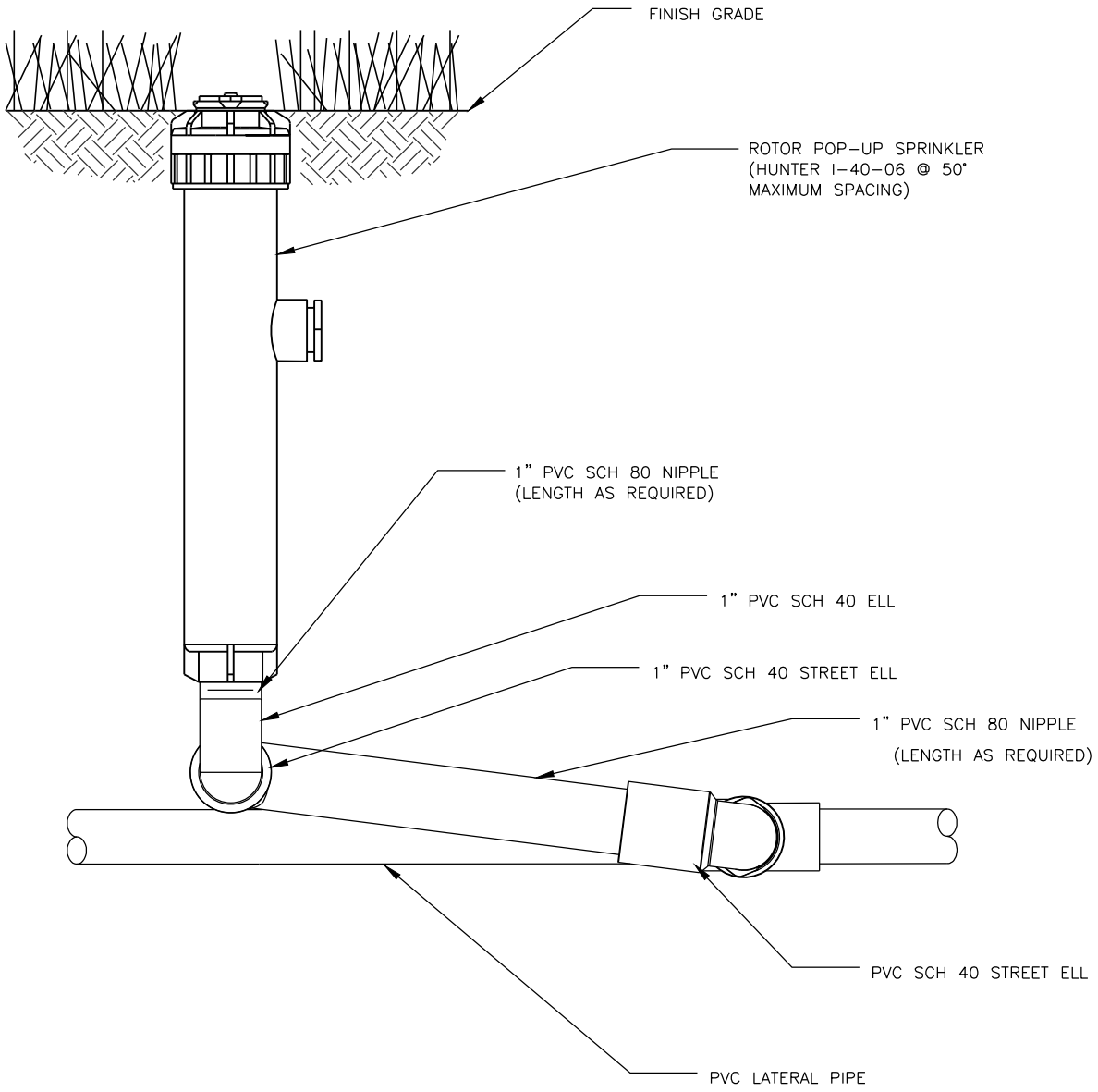

NOTE:

STREET ELLS TO BE
MARLEX, OR EQUAL

SPRINKLER SYSTEM LARGE AREA ROTARY HEAD DETAIL

DATE:	APRIL 2014
DRAWING NAME:	LS-6
DRAWN BY:	ETL
CHECKED:	APPROVED:

REVISIONS

REV	DATE	BY	COMMENTS

SARATOGA SPRINGS CITY

1307 N. COMMERCE DR.
#200, SARATOGA SPRINGS,
UT 84045
PHONE: 801-766-9793
FAX: 8017669794

STANDARD DETAILS

LANDSCAPING

LS-6

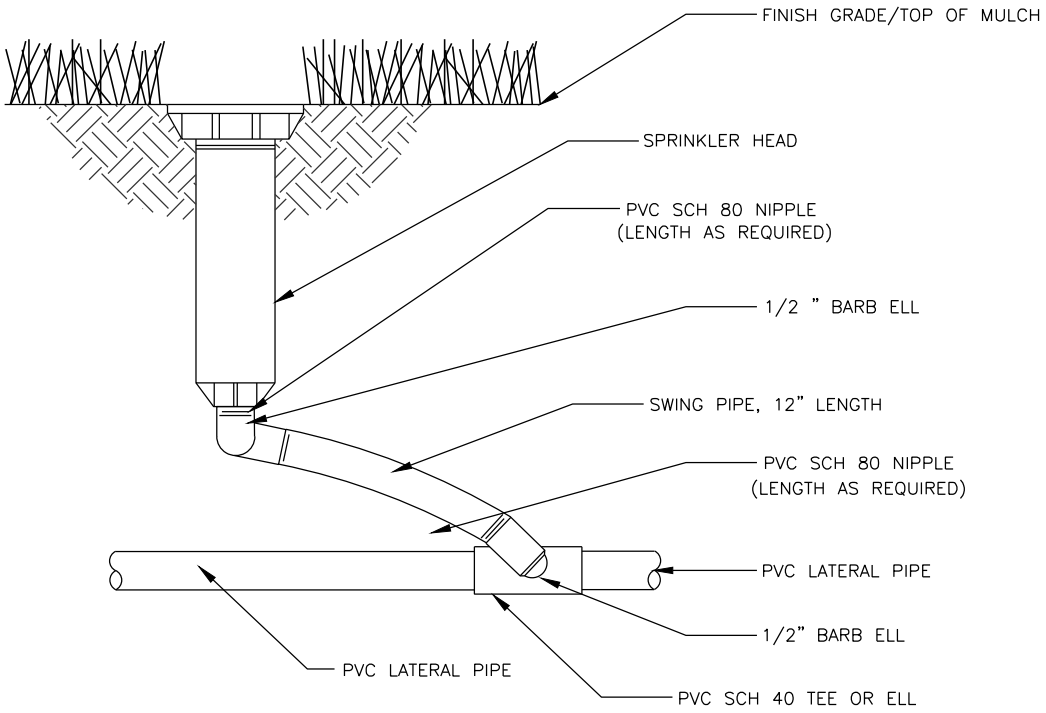

ROTORS FOR MEDIUM AND SMALL AREAS:

HUNTER I-20-06 @ 35' MAXIMUM SPACING

SPRAY HEADS FOR SMALL AREAS:

RAINBIRD #1806 FOR TURF AREAS, #1812 FOR SHRUB BEDS

HUNTER 6" PRO-SPRAY FOR TURF AREAS, 12" PRO-SPRAY FOR SHRUB BEDS

MEDIUM AND SMALL AREA SPRINKLER HEAD DETAIL

DATE: **APRIL 2014**

DRAWING NAME: **LS-7**

DRAWN BY: **ETL**

CHECKED: APPROVED:

REVISIONS

REV	DATE	BY	COMMENTS

SARATOGA SPRINGS CITY

1307 N. COMMERCE DR.
#200, SARATOGA SPRINGS,
UT 84045
PHONE: 801-766-9793
FAX: 8017669794

STANDARD DETAILS

LANDSCAPING

LS-7

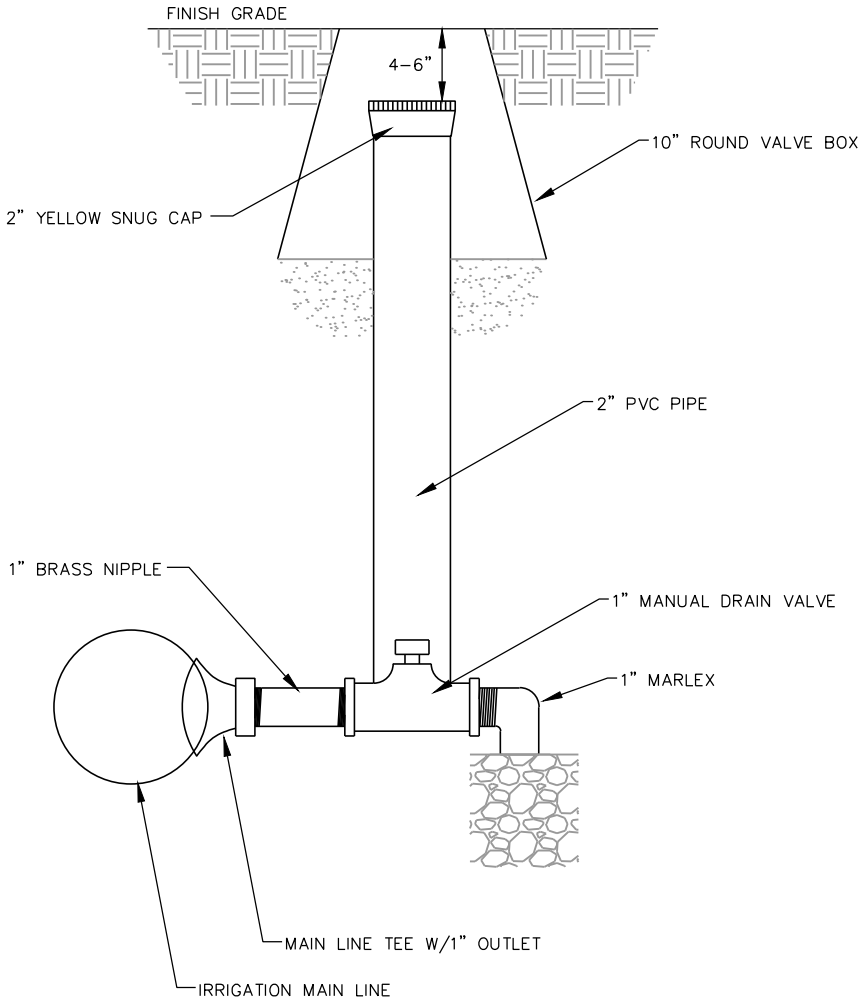

SPRINKLER SYSTEM MANUAL DRAIN DETAIL

DATE:	APRIL 2014
DRAWING NAME:	LS-8
DRAWN BY:	ETL
CHECKED:	APPROVED:

REVISIONS

REV	DATE	BY	COMMENTS

SARATOGA SPRINGS CITY

1307 N. COMMERCE DR.
#200, SARATOGA SPRINGS,
UT 84045
PHONE: 801-766-9793
FAX: 8017669794

STANDARD DETAILS

LANDSCAPING

LS-8

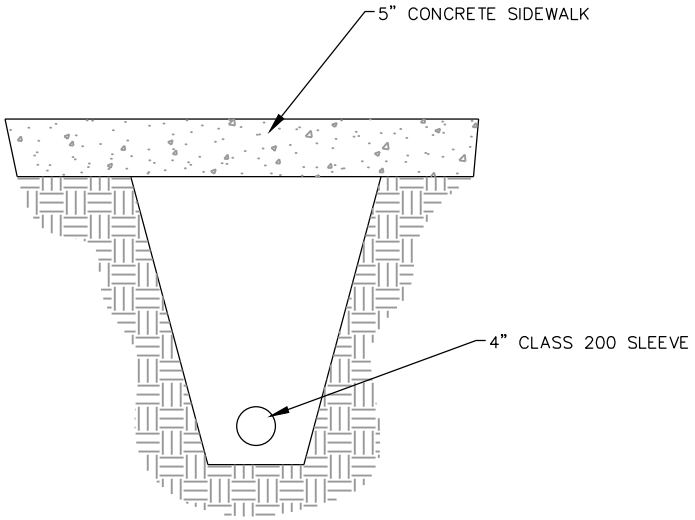

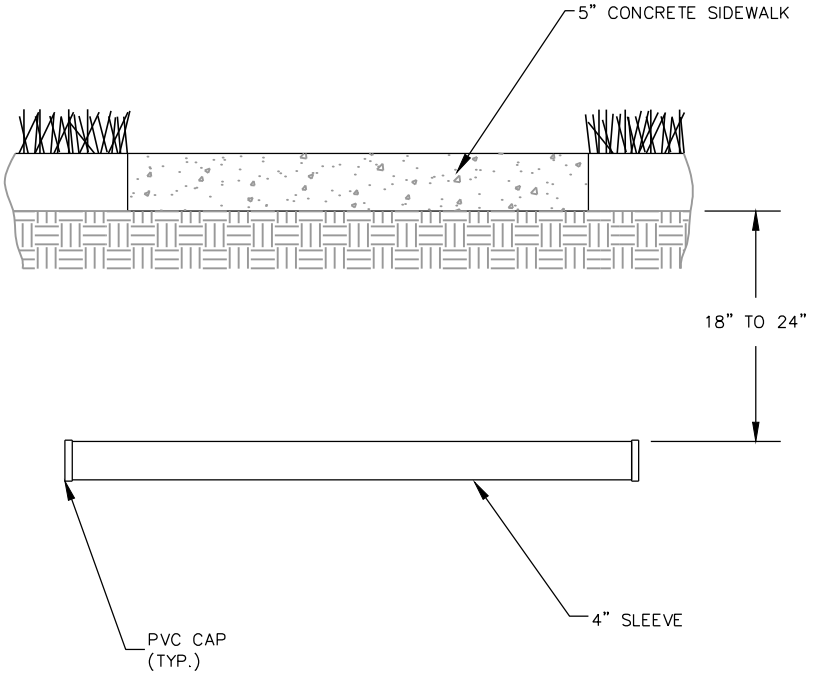

NOTES:

1. ONE WATER LINE PER SLEEVE.
2. ELECTRICITY AND WATER NOT TO SHARE SLEEVES.

SPRINKLER SYSTEM SLEEVING DETAIL

DATE:	APRIL 2014
DRAWING NAME:	LS-9
DRAWN BY:	ETL
CHECKED:	APPROVED:

REVISIONS

REV	DATE	BY	COMMENTS

SARATOGA SPRINGS CITY

1307 N. COMMERCE DR.
#200, SARATOGA SPRINGS,
UT 84045
PHONE: 801-766-9793
FAX: 8017669794

STANDARD DETAILS

LANDSCAPING

LS-9

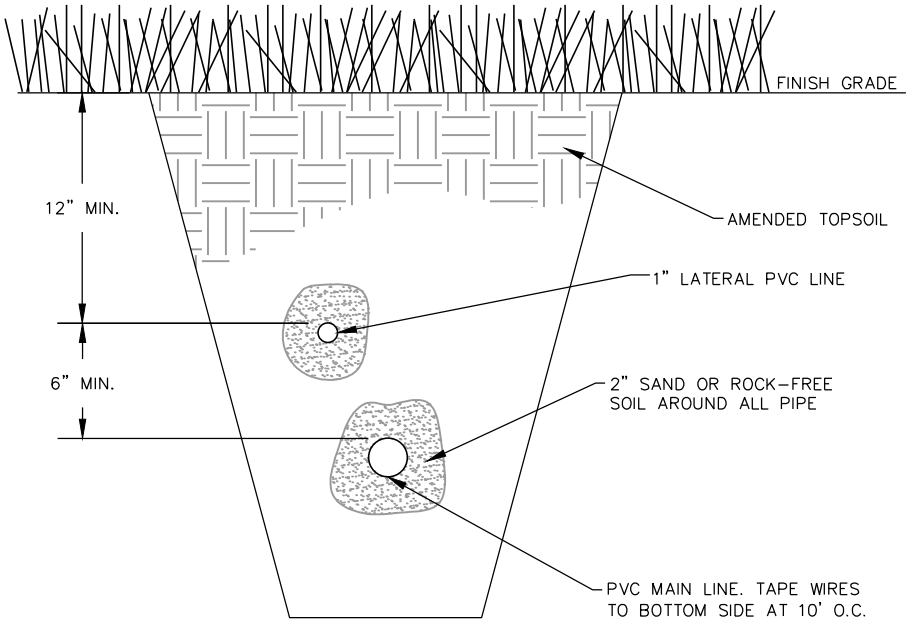

SPRINKLER SYSTEM PIPE/TRENCH DETAIL

DATE:	APRIL 2014
DRAWING NAME:	LS-10
DRAWN BY:	ETL
CHECKED:	APPROVED:

REVISIONS

REV	DATE	BY	COMMENTS

SARATOGA SPRINGS CITY

1307 N. COMMERCE DR.
#200, SARATOGA SPRINGS,
UT 84045
PHONE: 801-766-9793
FAX: 8017669794

STANDARD DETAILS

LANDSCAPING

LS-10

SECTION VIEW

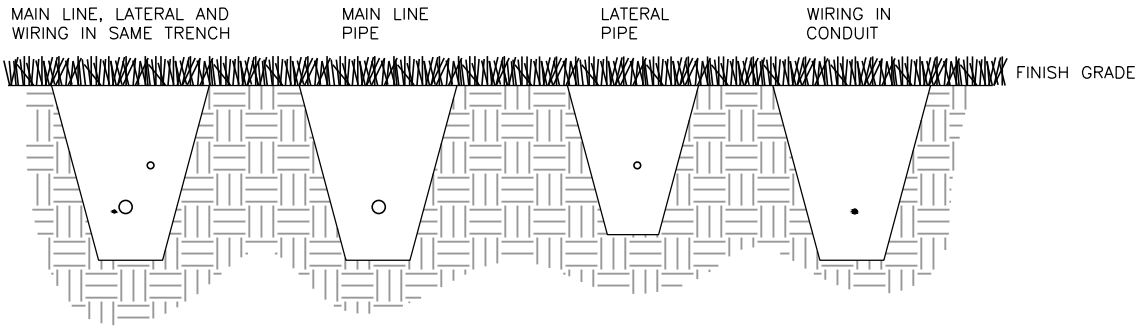

PLAN VIEW

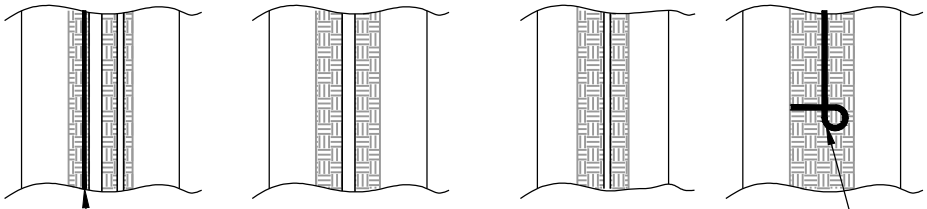

RUN WIRING BENEATH AND BESIDE MAIN LINE. TAPE AND BUNDLE AT 10' INTERVALS.

TIE A 24" LOOP IN ALL WIRING AT CHANGES OF DIRECTION OF 30°OR GREATER. UNTIE AFTER ALL CONNECTIONS HAVE BEEN MADE.

NOTES:

1. SLEEVE BELOW ALL HARDSCAPE ELEMENTS WITH CLASS 200 PVC TWICE THE DIAMETER OF THE PIPE OR WIRE BUNDLE WITHIN.
2. FOR PIPE AND WIRE BURIAL DEPTHS DETAILS. SEE SPECS.
3. ELECTRIC AND WATER NOT TO SHARE SLEEVES.

SPRINKLER SYSTEM PIPE AND WIRE TRENCH DETAIL

DATE: **APRIL 2014**

DRAWING NAME: **LS-11**

DRAWN BY: **ETL**

CHECKED: APPROVED:

REVISIONS

REV	DATE	BY	COMMENTS

SARATOGA SPRINGS CITY

1307 N. COMMERCE DR.
#200, SARATOGA SPRINGS,
UT 84045
PHONE: 801-766-9793
FAX: 8017669794

STANDARD DETAILS

LANDSCAPING

LS-11

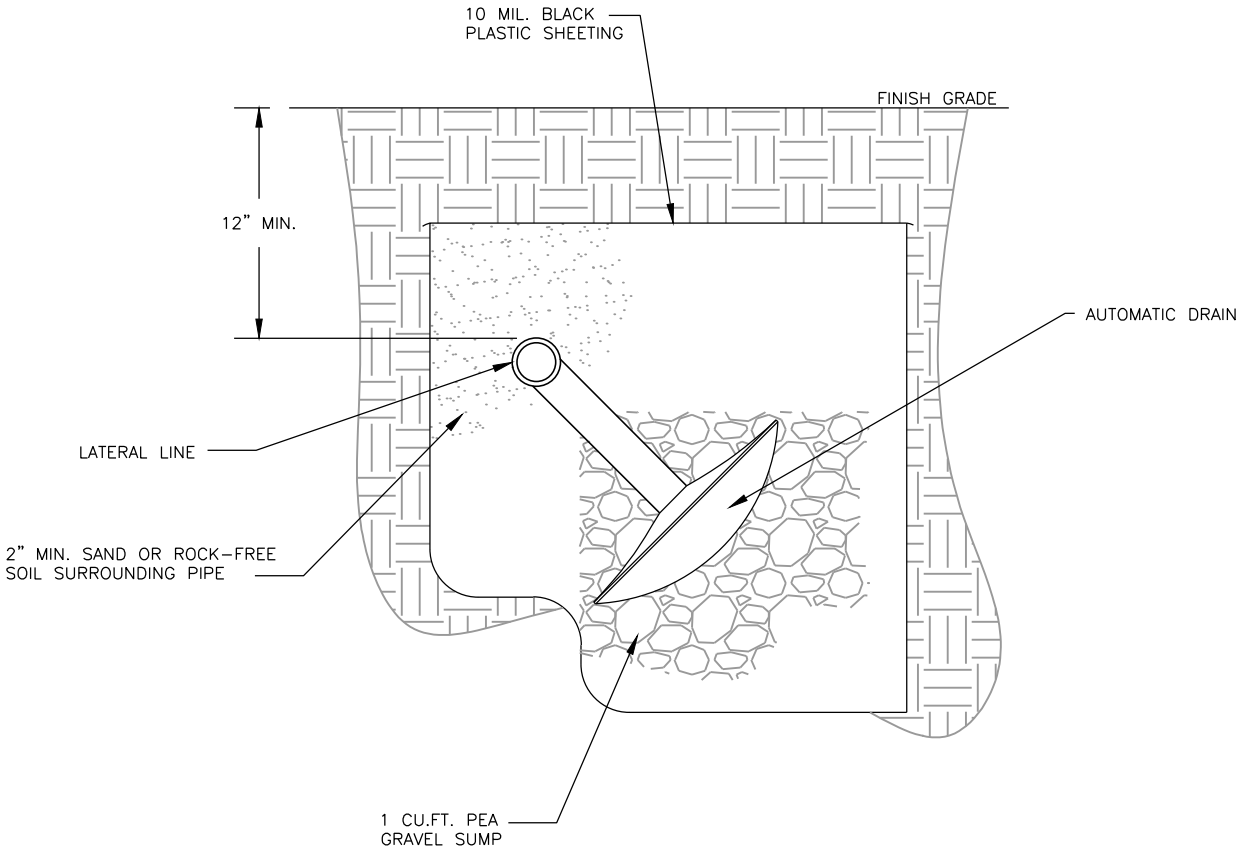

NOTE:

1. USE ONLY AT LOW POINTS OF LATERAL LINES. DO NOT USE IN VALVE BOXES.

2. DO NOT USE ON MAIN LINE

SPRINKLER SYSTEM AUTOMATIC DRAIN

DATE: **APRIL 2014**

DRAWING NAME: **LS-12**

DRAWN BY: **ETL**

CHECKED: APPROVED:

REVISIONS

REV	DATE	BY	COMMENTS

SARATOGA SPRINGS CITY

1307 N. COMMERCE DR.
#200, SARATOGA SPRINGS,
UT 84045
PHONE: 801-766-9793
FAX: 8017669794

STANDARD DETAILS

LANDSCAPING

LS-12

NOTES:

1. INSTALLATION INCLUDES REMOVAL OF STAKES AND WATERING RING ONE YEAR AFTER INSTALLATION.

2. SHAPE SOIL SURFACE TO PROVIDE 3' DIAMETER WATERING RING.

3. MULCH TREE PIT MIN 5'-0" LENGTH x FULL PLANTING STRIP WIDTH BETWEEN CURB AND SIDEWALK (FOR PLANTING STRIPS LESS THAN 6'-0"WIDE.) PROVIDE 5'-0"ø MULCH RING FOR PLANTING STRIPS WIDER THAN 6'-0".

4. TREE PIT DEPTH = ROOTBALL DEPTH (MEASURE BEFORE DIGGING TO AVOID OVER EXCAVATION).

5. GRANULAR FERTILIZER PLACE AFTER PLANT HOLE IS BACKFILLED. QUANTITY BASED ON TREE GROWERS RECOMMENDATIONS.

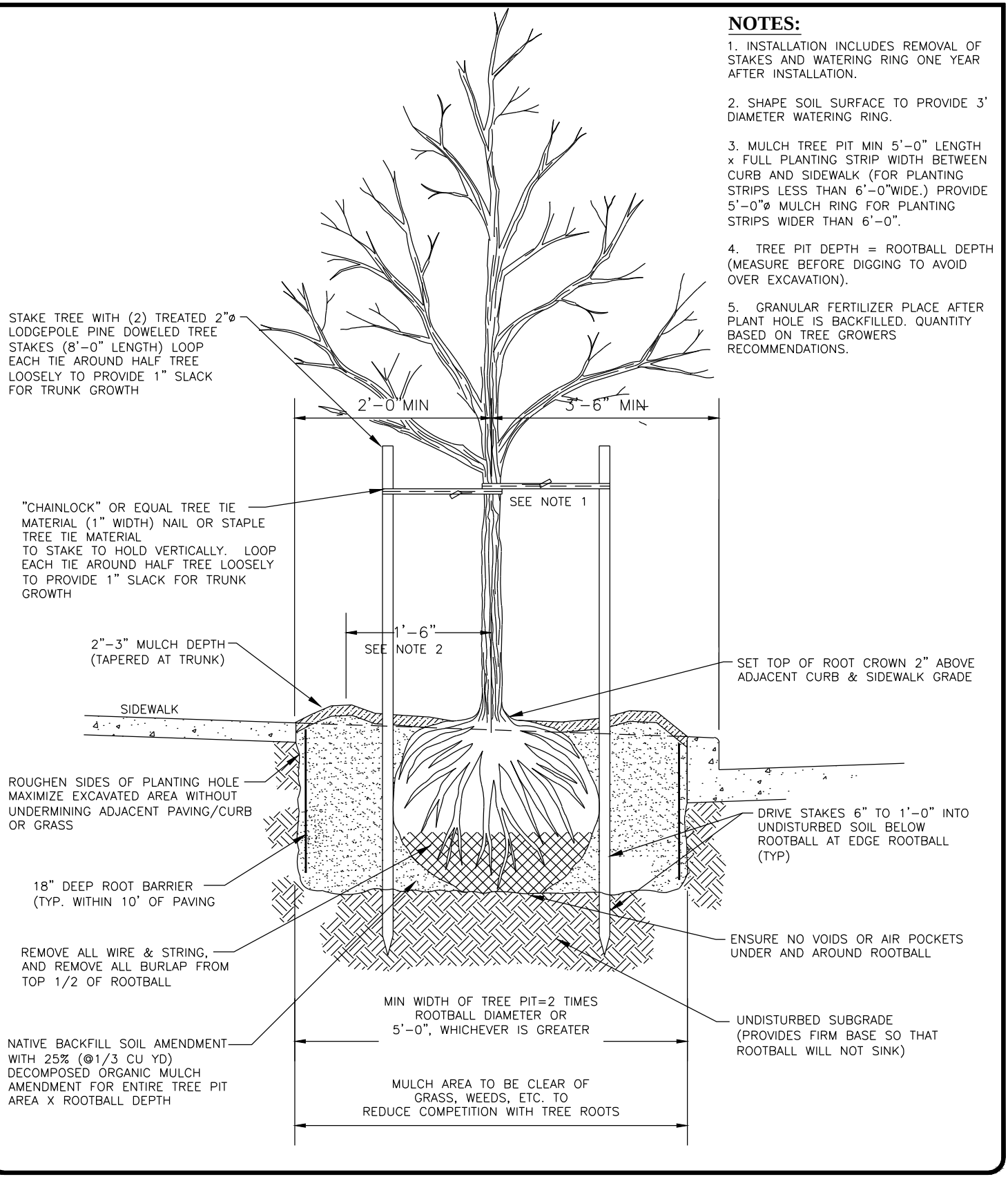

TREE STAKING AND PLANTING

DATE:	APRIL 2014
DRAWING NAME:	LS-13
DRAWN BY:	ETL
CHECKED:	APPROVED:

REVISIONS

REV	DATE	BY	COMMENTS

SARATOGA SPRINGS CITY

1307 N. COMMERCE DR.
#200, SARATOGA SPRINGS,
UT 84045
PHONE: 801-766-9793
FAX: 8017669794

STANDARD DETAILS

LANDSCAPING

LS-13

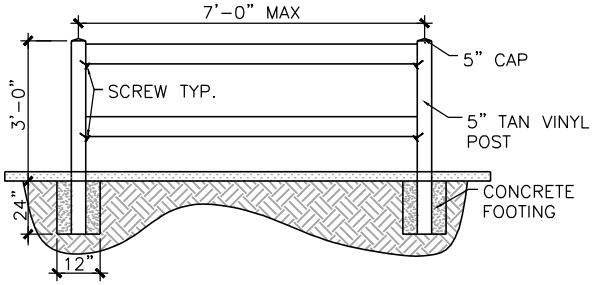

2-RAIL FRONT VIEW

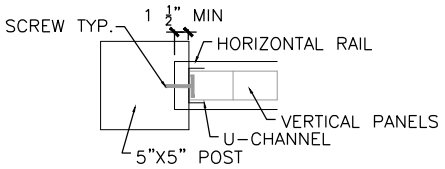

POST TOP VIEW

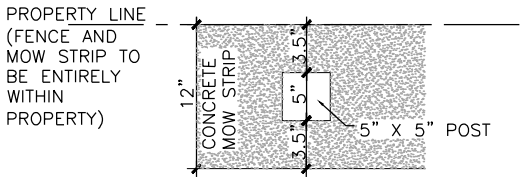

MOW STRIP TOP VIEW

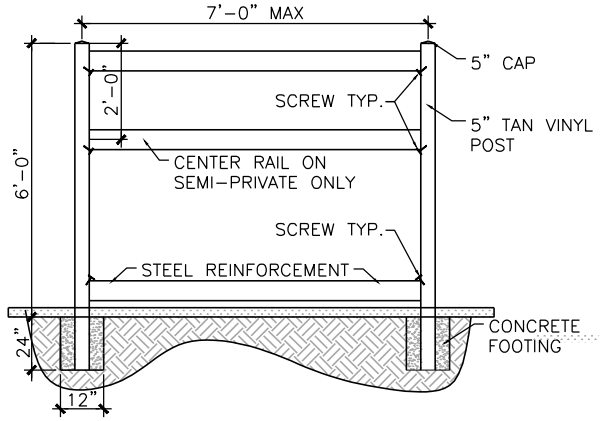

PRIVATE/SEMI-PRIVATE FRONT VIEW

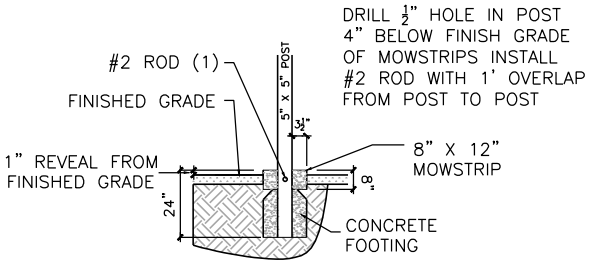

MOW STRIP TYP. CROSS SECTION

NOTES:

1. ALL ATTACHMENT SCREWS TO BE ZINC PLATED

2. FENCING SUB-CONTRACTOR TO PROVIDE SHOP DRAWINGS FOR ALL FENCING

3. GLUE ON CAPS WITH CLEAR PVC CEMENT

4. EXTEND RAIL AND STIFFENER INTO EACH POST 1 1/2" MINIMUM.

5. MAXIMUM DISTANCE FROM CENTER OF POST TO CENTER OF POST IS 7'.

6. PROVIDE 12" MINIMUM CIRCUMFERENCE HOLE FOR POST WITH A MINIMUM BURY DEPTH OF 24".

7. USE WET MIX CONCRETE ONLY. ALLOW TO SET FOR 5 DAYS BEFORE SETTING RAILS. MINIMUM 3,000 PSI MIX.

8. USE VERTICAL U-CHANNEL ON ALL PRIVACY FENCING POSTS TO SUPPORT FENCE PANELS. ON SEMI PRIVATE FENCING USE WHERE PANELS ARE ADJACENT TO POSTS. SCREW SPACING ON U-CHANNLES TO BE 18" MAX. WITH A MINIMUM OF 2 SCREWS PER SEGMENT.

9. ATTACH ALL RAILS TO POSTS WITH FULL SHANK THREADED, ZINC PLATED, WOOD SCREWS (2"). "CRIMPED ENDS" ON RAILS NOT ACCEPTABLE. SECURE SCREW THROUGH POST AND INTO RAIL FROM UNDERNEATH THE HORIZONTAL RAIL EXCEPT ON BOTTOM RAIL WHERE SCREW CAN BE INSTLLED FROM THE TOP.

10. MATERIALS, CONSTRUCTION, AND WORKMANSHIP SHALL BE IN ACCORDANCE WITH CITY'S STANDARD SPECIFICATIONS.

11. COMPACT NATIVE SOIL BELOW MOW STRIP TO 90%

Privacy Fence			
	Post	Horizontal Rail	Vertical Planks
Wall thickness	0.15"	0.09"	0.06"
Dimension	5"x5", 6' tall above grade	1 1/2" X 5 1/2"	7/8" X 6"
Reinforcement Steel/Alum.	NO	Bottom Rail only	NO
Type	Square	rectangular	T & G rectangular
Spacing	7' on Center	N/A	0"
Semi-Private			
	Post	Horizontal Rail	Vertical Planks
Wall thickness	0.15"	0.09"	0.06"
Dimension	5"x5", 6' tall above grade	1 1/2" X 3 1/2"	7/8" X 3"
Reinforcement Steel/Alum.	NO	Bottom rail only	NO
Type	square	Rectangular	Rectangular
Spacing	7' on center	Approx. 2' from top of post	4" on center
Two Rail Fence			
	Post	Horizontal Rail	Vertical Planks
Wall thickness	0.15"	0.125"	N/A
Dimension	5"x5", 3' tall above grade	2" X 6"	N/A
Reinforcement Steel/Alum.	NO	NO	NO
Type	square	rectangular	rectangular
Spacing	7' on center	aprox. 16" apart	N/A

VINYL FENCE WITH MOW STRIP

DATE: APRIL 2014

DRAWING NAME: LS-14

DRAWN BY: ETL

CHECKED: APPROVED:

REVISIONS

REV	DATE	BY	COMMENTS

SARATOGA SPRINGS CITY

1307 N. COMMERCE DR.
#200, SARATOGA SPRINGS, UT 84045
PHONE: 801-766-9793
FAX: 8017669794

STANDARD DETAILS

LANDSCAPING

LS-14

STANDARD STREET LIGHT DETAILS

INDEX:

LP-1	14' RESIDENTIAL STREET LIGHT
LP-1A	CONCRETE BASE DETAIL FOR 14' RESIDENTIAL STREET LIGHT
LP-1B	RESIDENTIAL STREET LIGHT LUMINARE
LP-2	20' STREET LIGHT COLLECTOR/COMMERCIAL
LP-2A	20' STREET LIGHT COLLECTOR/COMMERCIAL WITH BANNER ARM
LP-2B	CONCRETE BASE DETAIL FOR COLLECTOR/COMMERCIAL STREET LIGHT
LP-2C	LUMINARE- COLLECTOR/COMMERCIAL
LP-3	28' ARTERIAL STREET LIGHT
LP-3A	28' ARTERIAL STREET LIGHT WITH BANNER ARM
LP-3B	CONCRETE BASE DETAIL FOR 28' ARTERIAL STREET LIGHT
LP-3C	ARTERIAL STREET LIGHT LUMINARE
LP-4	RESIDENTIAL STREET LIGHT CONNECTION DETAIL
LP-5	COLLECTOR AND ARTERIAL STREET LIGHT CONNECTION DETAIL
LP-6	LIGHT POLE BELOW GRADE BOXES INTALLATION DETAILS

STREET LIGHT STANDARDS

DATE: APRIL 2014

DRAWING NAME: LP-0

DRAWN BY: CJG

CHECKED: APPROVED:

REVISIONS

REV	DATE	BY	COMMENTS

SARATOGA SPRINGS CITY

1307 N. COMMERCE DR.
#200, SARATOGA SPRINGS,
UT 84045
PHONE: 801-766-9793
FAX: 8017669794

STANDARD DETAILS

STREET LIGHTS

LP-0

ORDERING GUIDE:

COMPLETE ASSEMBLY PART: LP-1
POLE: 14EFA-5.0-TT-3X3-AB
LIGHT FIXTURE: SS-CL52T4-44LED
DECORATIVE BASE: 16"VIRG(NAME)-BK

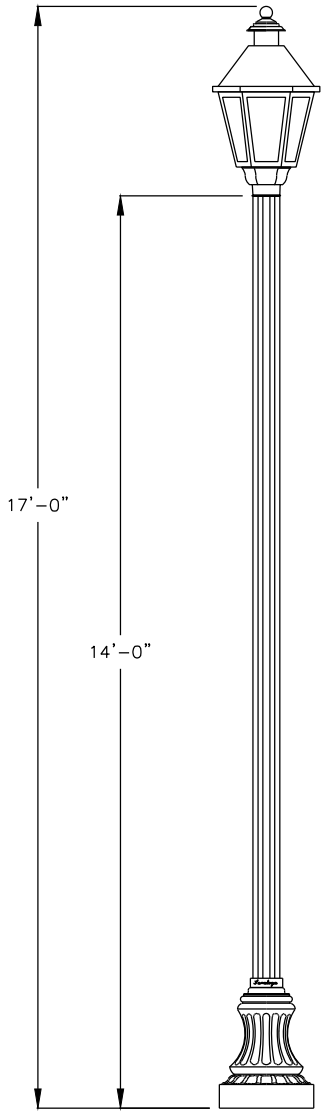

FINISH; BLACK

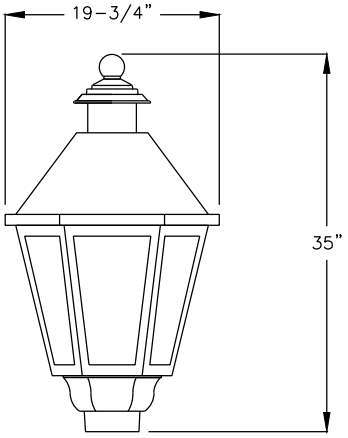

ENLARGED FIXTURE DETAIL

POLE SPECIFICATIONS:

POLE HEIGHT: 14' EXTRUDED ALUMINUM TOTAL
POLE: 5" O.D. THICKNESS: .250"
EPA: MIN 20 IN 80 MPH ZONE (1.3 GUST FACTOR)
BASE = 16" DECORATIVE ELASTOMER TWO-PIECE - AVERAGE 3/4" THICK (50 lbs)
ANCHOR PLATE: 12" BOLT CIRCLE WITH 3/4" x 18" BOLTS

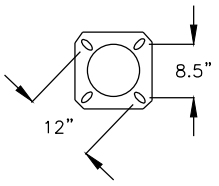

ANCHOR BASE DETAIL
12" BOLT CIRCLE
ANCHOR BOLTS: 3/4" x 18"

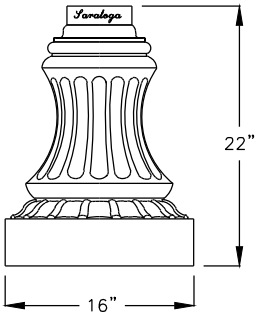

ENLARGED DECORATIVE BASE DETAIL

14' RESIDENTIAL STREET LIGHT

DATE:	APRIL 2014
DRAWING NAME:	LP-1
DRAWN BY:	CJG
CHECKED:	APPROVED:

REVISIONS

REV	DATE	BY	COMMENTS

SARATOGA SPRINGS CITY

1307 N. COMMERCE DR.
#200, SARATOGA SPRINGS,
UT 84045
PHONE: 801-766-9793
FAX: 8017669794

STANDARD DETAILS

STREET LIGHTS

LP-1

NOTE!
IF DEPTH CANNOT BE MET
MASS MUST BE EQUIVALENT
TO MASS SHOWN

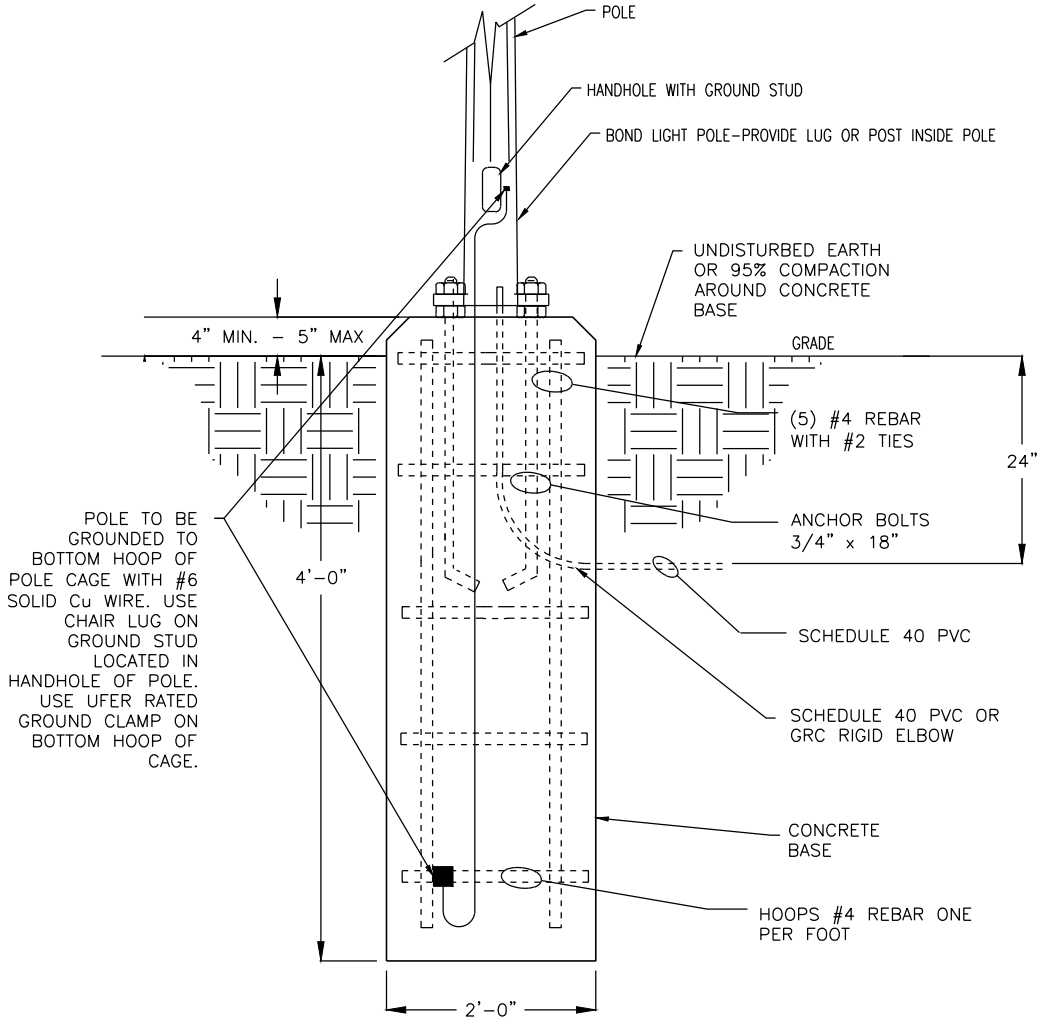

CONCRETE BASE DETAIL FOR 14' RESIDENTIAL STREET LIGHT

DATE:	APRIL 2014
DRAWING NAME:	LP-1A
DRAWN BY:	CJG
CHECKED:	APPROVED:

REVISIONS

REV	DATE	BY	COMMENTS

SARATOGA SPRINGS CITY

1307 N. COMMERCE DR.
#200, SARATOGA SPRINGS,
UT 84045
PHONE: 801-766-9793
FAX: 8017669794

STANDARD DETAILS

STREET LIGHTS

LP-1A

ORDERING GUIDE:

LIGHT FIXTURES: SS-CL52T4-44LED
PHOTOCELL: 6390TF-BK

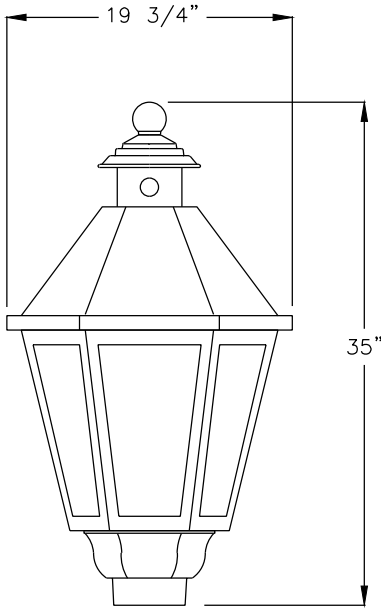

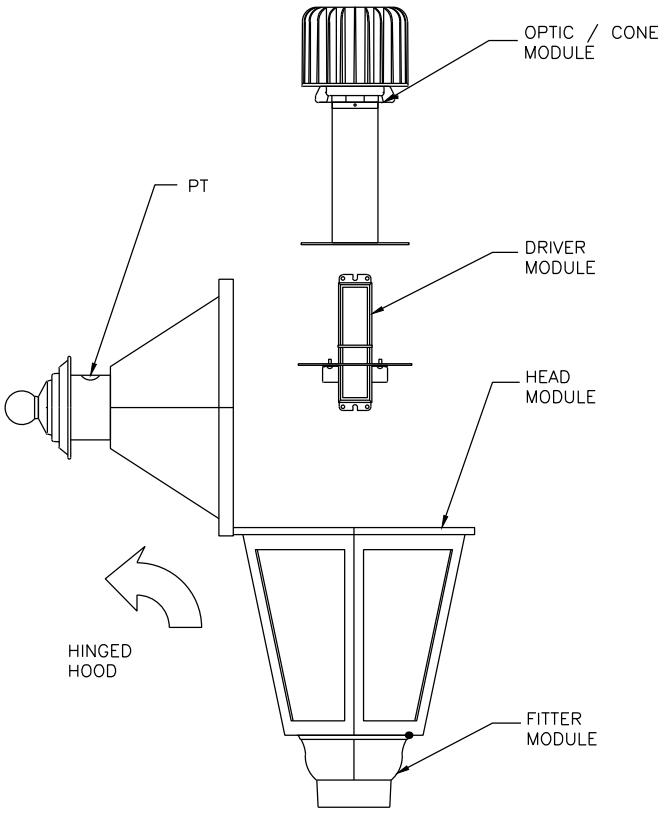

CATALOG NO: CL62T4-FLAF-3L-44W-4K-120-EK1-DEP-F3AP-PT-RAL9005TX
LUMINAIRE: HEXAGONAL SHAPE
IES CLASSIFICATION: FROSTED ACRYLIC LENS
WATTAGE: 44 WATTS
LIGHT SOURCE: BOARD LED - 4000K
LINE VOLTAGE: 120 VOLTS
DRIVER: MOUNTED ON TRAY WITH QUICK RELEASE CONNECTORS
IP66 WEATHERPROOF LUMINAIRE WITH "V" GROOVE SILICONE GASKET
OPTION: TWIST LOCK PHOTOCELL PRE-INSTALLED IN DECORATIVE CUPOLA.

ALL NON ELECTRICAL HARDWARE SHALL BE STAINLESS STEEL

COLOR & FINISH: BLACK (RAL9005TX) TEXTURED POWDER COAT
PAINT WARRANTY: 5 YEARS

RESIDENTIAL STREET LIGHT LUMINARE

DATE: **APRIL 2014**
DRAWING NAME: **LP-1B**
DRAWN BY: **CJG**
CHECKED: APPROVED:

REVISIONS

REV	DATE	BY	COMMENTS

SARATOGA SPRINGS CITY

1307 N. COMMERCE DR.
#200, SARATOGA SPRINGS,
UT 84045
PHONE: 801-766-9793
FAX: 8017669794

STANDARD DETAILS

STREET LIGHTS

LP-1B

ORDERING GUIDE:

COMPLETE ASSEMBLY PART: LP-2
POLE: 20TFS-4.5/7-SA-USA18"
LIGHT FIXTURE: C12750-64LED-120
DECORATIVE BASE: 20"VIRG(NAME)-BK

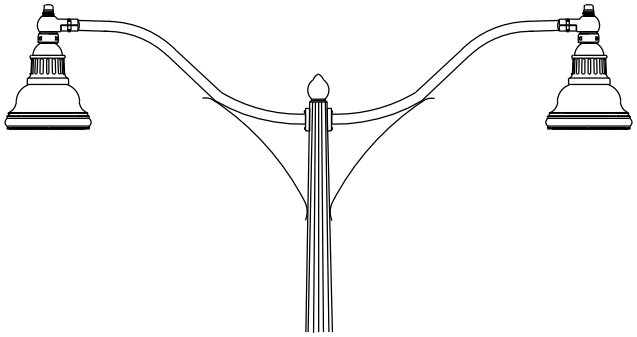

SHOWN WITH DOUBLE FIXTURE

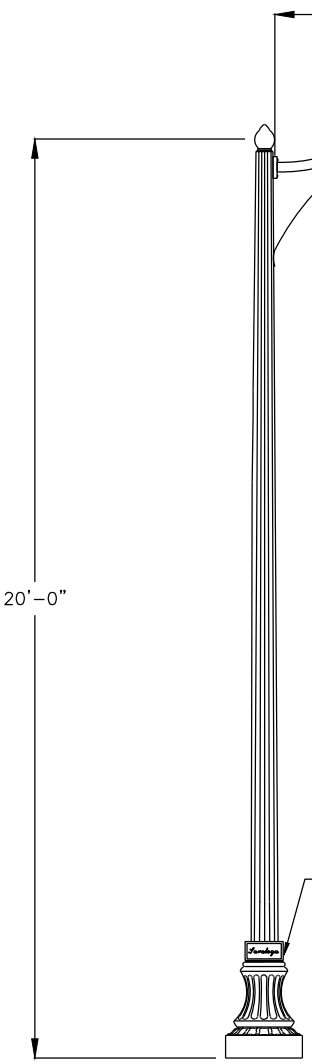

MSL PLUMBIZER WITH PHOTOCELL: RIPLEY #6390TF-1.0-BK

FIXTURE BY MOUNTAIN STATES LIGHTING HADCO WESTBROOKE C12750 FIXTURE. 64 LED 120 VOLT SEE DETAILS ON SEPARATE DRAWING.

POLE BY MOUNTAIN STATES LIGHTING PART # 20TFS-4.5/7-SA-USR18"-20"VIRG(NAME)-BK 20' TAPERED FLUTED STEEL STEEL PAINTED WITH FIRST 16" OF POLE AND BASE PLATE TO BE COATED WITH INDUSTRIAL ZINC COATING MIN EPA OF 12 IN 100 MPH ZONE (1.3 GUST FACTOR)

BASE BY MOUNTAIN STATES LIGHTING HIGH DENSITY ELASTOMER DECORATIVE BASE, DENSITY OF 71 LBS PER CUBIC FOOT. PAINTED BLACK HANDHOLE BEHIND TWO-PIECE BASE

FINISH: BLACK

4 BOLTS AT 90 DEGREES 3/4" DIA x 18" LONG x 3" HOOK BOLTS TO HAVE A 3.5" PROJECTION OUT OF THE CONCRETE. BOLTS TO GE GALVANIZED

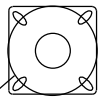

ANCHOR BASE DETAIL 12" BOLT CIRCLE 7/8" x 1" HOLES TO ACCOMMODATE UP TO 3/4" DIA BOLT

ANCHOR BASE

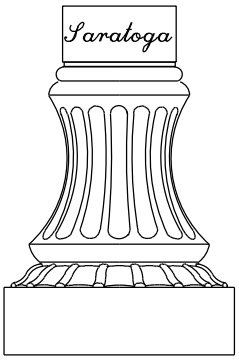

ENLARGED DECORATIVE BASE DETAIL

20' STREET LIGHT COLLECTOR / COMMERCIAL

DATE:	APRIL 2014
DRAWING NAME:	LP-2
DRAWN BY:	CJG
CHECKED:	APPROVED:

REVISIONS

REV	DATE	BY	COMMENTS

SARATOGA SPRINGS CITY

1307 N. COMMERCE DR.
#200, SARATOGA SPRINGS,
UT 84045
PHONE: 801-766-9793
FAX: 8017669794

STANDARD DETAILS

STREET LIGHTS

LP-2

ORDERING GUIDE:

COMPLETE ASSEMBLY PART: LP-2A
POLE: 20TFS-4.5/7-SA-USA18"W ACC
LIGHT FIXTURE: C12750-64LED-120
DECORATIVE BASE: 20"VIRG(NAME)-BK

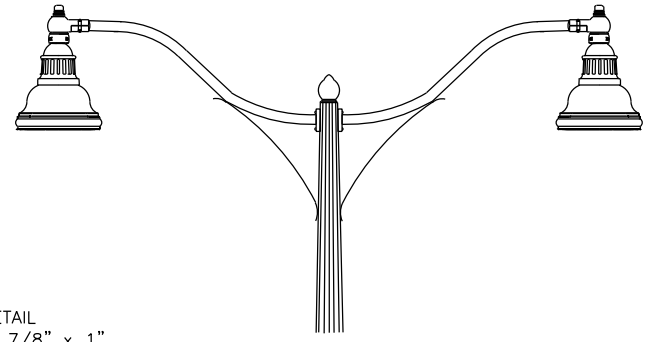

SHOWN WITH DOUBLE FIXTURE

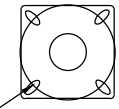

4 BOLTS AT 90 DEGREES 3/4" DIA x 18" LONG x 3" HOOK BOLTS TO HAVE A 3.5" PROJECTION OUT OF THE CONCRETE. BOLTS TO GE GALVANIZED

ANCHOR BASE DETAIL
12" BOLT CIRCLE 7/8" x 1" HOLES TO ACCOMMODATE UP TO 3/4" DIA BOLT

ANCHOR BASE

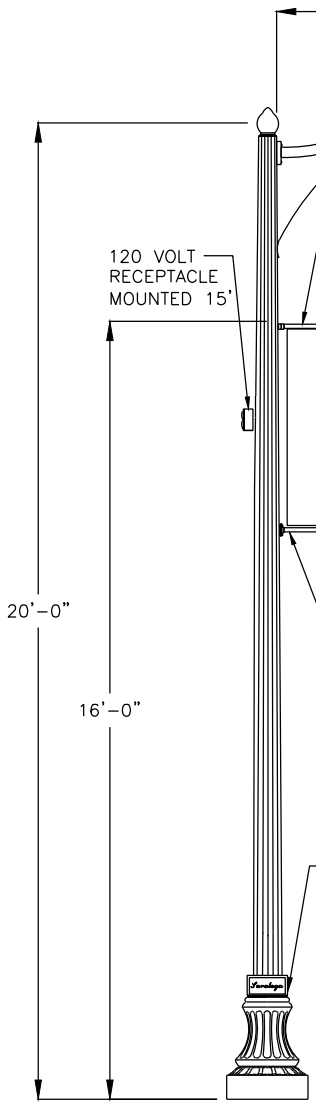

FINISH: BLACK

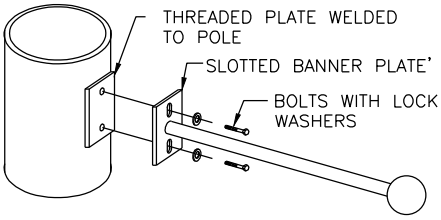

ADJUSTABLE BANNER ARM DETAIL

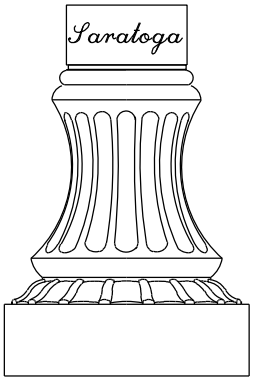

DECORATIVE BASE DETAIL

NOTE:
BANNER ARMS WILL BE REQUIRED FOR PROJECTS LOCATED WITHIN A REGIONAL COMMERCIAL (RC) OR MIXED USE (MU) ZONE, AS WELL AS THE COMMERCE DRIVE LOOP AND ADJACENT TO THE HIGH SCHOOL AND JUNIOR HIGH FACILITIES WITHIN THE CITY. ADDITIONAL LOCATIONS THAT MAY MERIT THE USE OF BANNER ARMS WILL BE DETERMINED ON A CASE BY CASE BASIS.

20' STREET LIGHT COLLECTOR / COMMERCIAL WITH BANNER ARM

DATE:	APRIL 2014
DRAWING NAME:	LP-2A
DRAWN BY:	CJG
CHECKED:	APPROVED:

REVISIONS

REV	DATE	BY	COMMENTS

SARATOGA SPRINGS CITY

1307 N. COMMERCE DR.
#200, SARATOGA SPRINGS, UT 84045
PHONE: 801-766-9793
FAX: 8017669794

STANDARD DETAILS

STREET LIGHTS

LP- 2A

NOTE!
IF DEPTH CANNOT BE MET
MASS MUST BE EQUIVALENT
TO MASS SHOWN

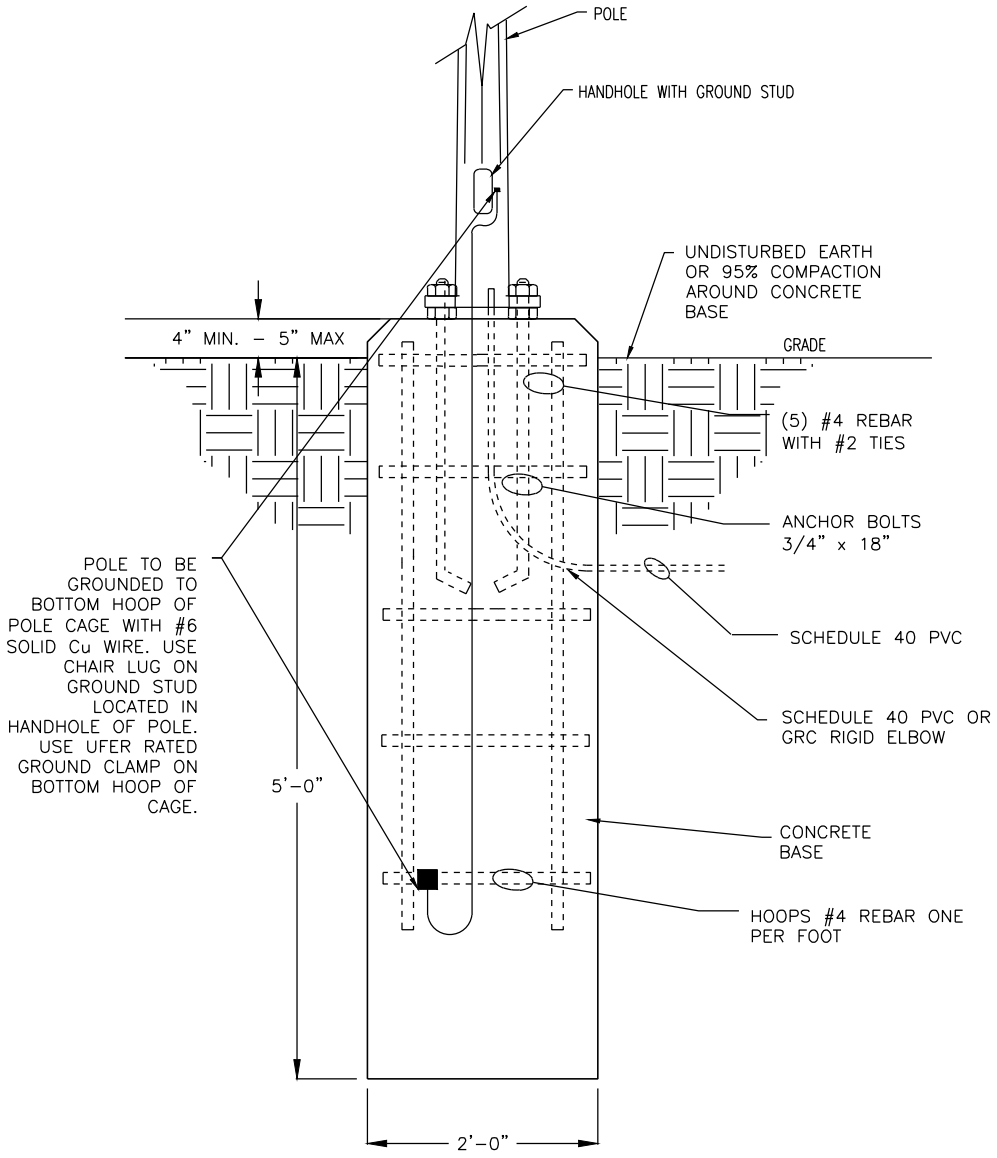

CONCRETE BASE DETAIL 20' STREET LIGHT COLLECTOR / COMMERCIAL

DATE:	APRIL 2014
DRAWING NAME:	LP-2B
DRAWN BY:	CJG
CHECKED:	APPROVED:

REVISIONS

REV	DATE	BY	COMMENTS

SARATOGA SPRINGS CITY
1307 N. COMMERCE DR.
#200, SARATOGA SPRINGS,
UT 84045
PHONE: 801-766-9793
FAX: 8017669794

STANDARD DETAILS

STREET LIGHTS

LP-2B

MSL ORDERING GUIDE

LIGHT FIXTURE: C12750A-64LED-120
PHOTOCELL: 6390TF-BK

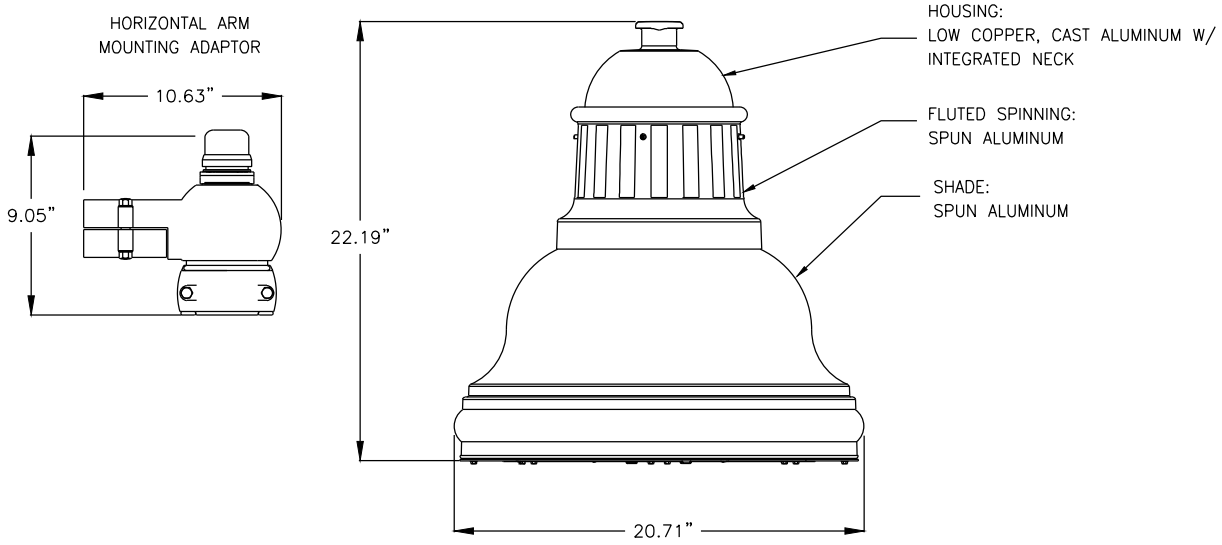

Philips LEDgine Specifications:

- 64, 4000K (NEUTRAL) PHILIPS LUMILEDs LUXEON R LEDs, TYPICAL 75 COLOR RENDERING INDEX (CRI), >65,000 HOURS OF OPERATIONAL LIFE (AT 25°C AMBIENT TEMPERATURE & 70% LUMEN MAINTENANCE), INJECTION MOLDED TYPE III OPTICAL PLATES.
- INTEGRAL PHILIPS ADVANCE XITANIUM LED DRIVER, CLASS 1, IP66 RATED, 350mA, INTELLIVOLT 120 VAC, 50-60 Hz, RoHS COMPLIANT, STANDARD BUILD IN >3kV SURGE SUPPRESSION.
- UL8750 & UL1598 COMPLIANT, ETL/cETL LISTED TO U.S. & CANADIAN SAFETY STANDARDS FOR WET LOCATIONS, MANUFACTURED TO ISO 9001:2008 STANDARDS, VIBRATION TESTED TO ANSI C136.31 FOR BRIDGE APPLICATIONS.

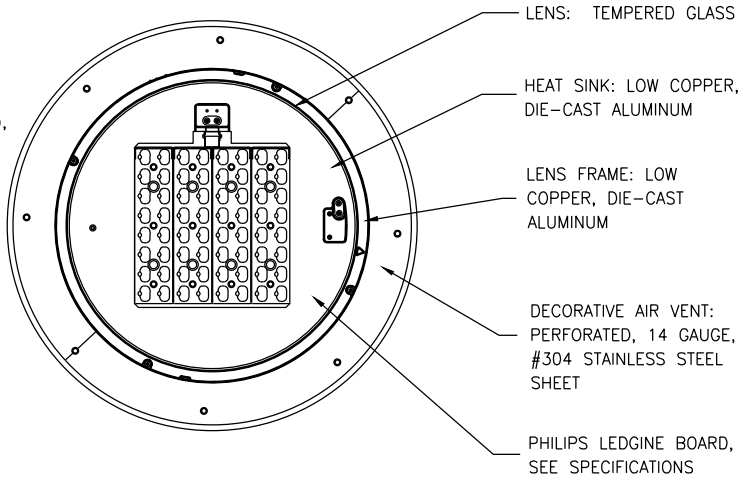

LUMINARE COLLECTOR/ COMMERCIAL STREET LIGHT

DATE:	APRIL 2014
DRAWING NAME:	LP-2C
DRAWN BY:	CJG
CHECKED:	APPROVED:

REVISIONS

REV	DATE	BY	COMMENTS

SARATOGA SPRINGS CITY

1307 N. COMMERCE DR.
#200, SARATOGA SPRINGS,
UT 84045
PHONE: 801-766-9793
FAX: 8017669794

STANDARD DETAILS

STREET LIGHTS

LP-2C

ORDERING GUIDE:

COMPLETE ASSEMBLY PART: LP-3
POLE: 28TFS-4.5/7-SA-SA TRUSS
LIGHT FIXTURE: C12750-80LED-120
DECORATIVE BASE: 22"MAD(NAME)-BK

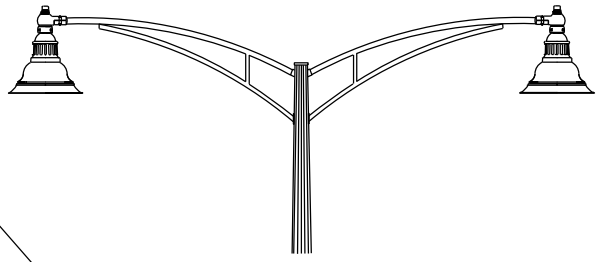

SHOWN WITH DOUBLE FIXTURE

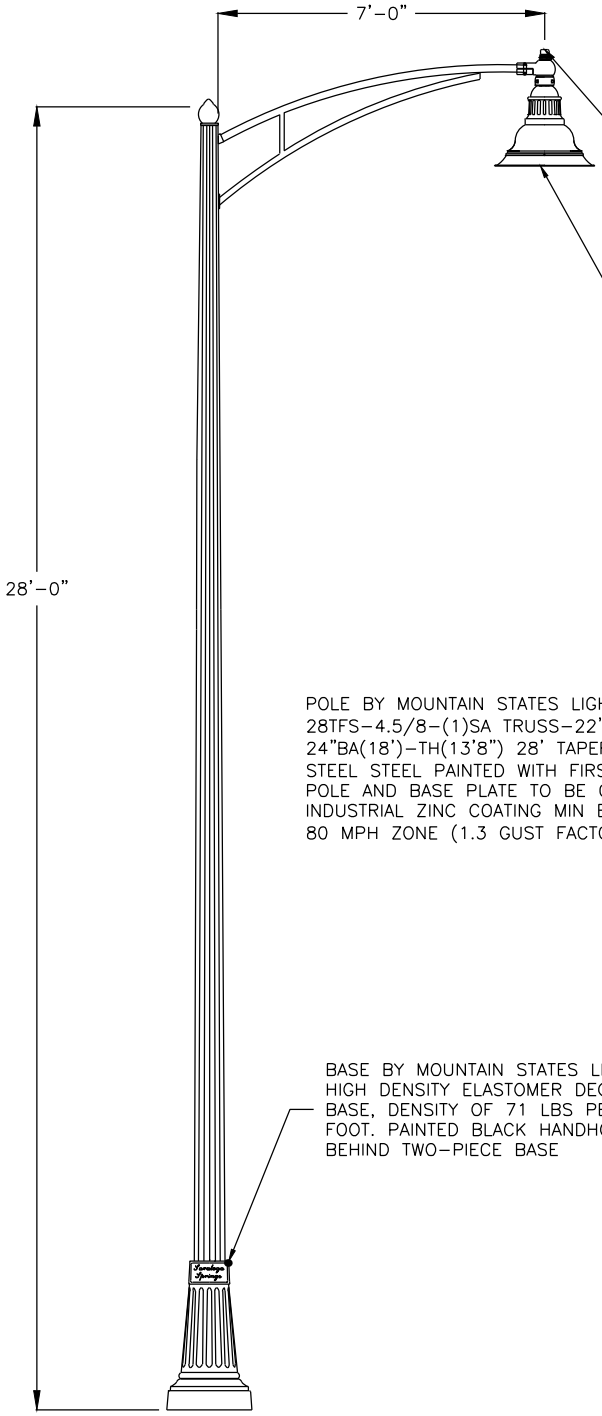

MSL PLUMBIZER WITH PHOTOCELL:
RIPLEY #6390TF-1.0-BK

FIXTURE BY MOUNTAIN STATES LIGHTING
HADCO WESTBROOKE FIXTURE.
C12750A 80 LED 120 VOLT SEE
DETAILS ON SEPARATE DRAWING.

POLE BY MOUNTAIN STATES LIGHTING PART#
28TFS-4.5/8-(1)SA TRUSS-22"MAD(NAME)-BK
24"BA(18')-TH(13'8") 28' TAPERED FLUTED
STEEL STEEL PAINTED WITH FIRST 16" OF
POLE AND BASE PLATE TO BE COATED WITH
INDUSTRIAL ZINC COATING MIN EPA OF 12 IN
80 MPH ZONE (1.3 GUST FACTOR)

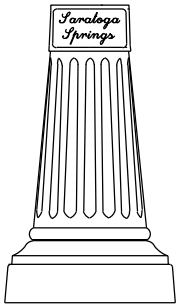

ENLARGED DECORATIVE BASE DETAIL

BASE BY MOUNTAIN STATES LIGHTING
HIGH DENSITY ELASTOMER DECORATIVE
BASE, DENSITY OF 71 LBS PER CUBIC
FOOT. PAINTED BLACK HANDHOLE
BEHIND TWO-PIECE BASE

4 BOLTS AT 90 DEGREES
1" DIA x 36" LONG x 3"
HOOK BOLTS TO HAVE A 4"
PROJECTION OUT OF THE
CONCRETE. BOLTS TO GE
GALVANIZED

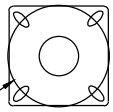

ANCHOR BASE DETAIL 12" BOLT
CIRCLE 1 1/8" x 2" HOLES TO
ACCOMMODATE UP TO 1" DIA
BOLT

FINISH: BLACK

28' ARTERIAL STREET LIGHT

DATE:	APRIL 2014
DRAWING NAME:	LP-3
DRAWN BY:	CJG
CHECKED:	APPROVED:

REVISIONS

REV	DATE	BY	COMMENTS

SARATOGA SPRINGS CITY

1307 N. COMMERCE DR.
#200, SARATOGA SPRINGS,
UT 84045
PHONE: 801-766-9793
FAX: 8017669794

STANDARD DETAILS

STREET LIGHTS

LP-3

ORDERING GUIDE:

COMPLETE ASSEMBLY PART: LP-3A
POLE: 28TFS-4.5/7-SA-SA TRUSS/W ACC
LIGHT FIXTURE: C12750-80LED-120
DECORATIVE BASE: 22"MAD(NAME)-BK

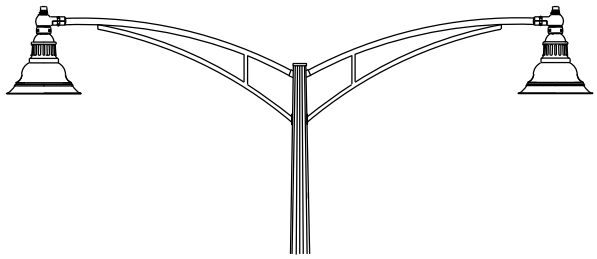

SHOWN WITH DOUBLE FIXTURE

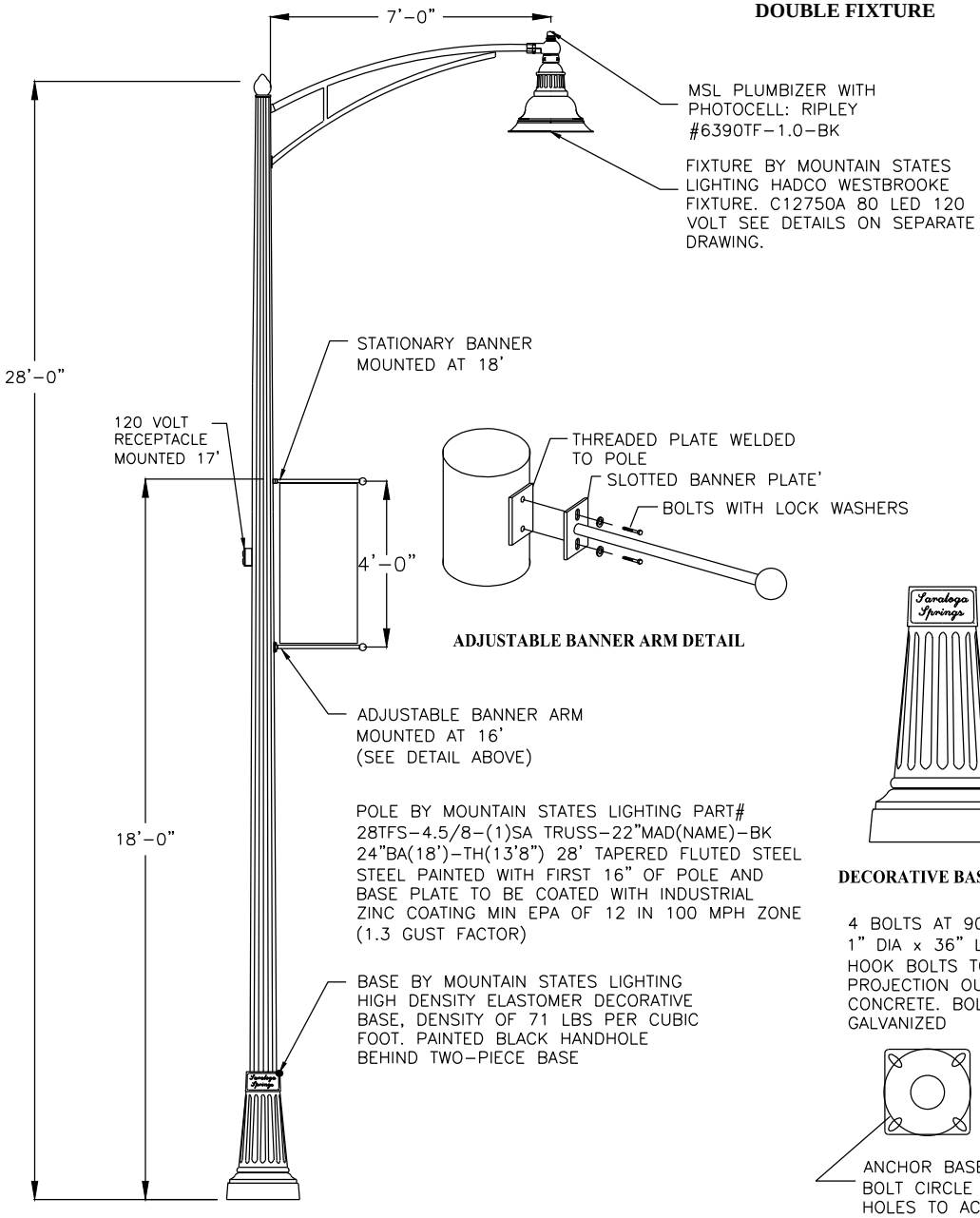

FINISH: BLACK

ADJUSTABLE BANNER ARM DETAIL

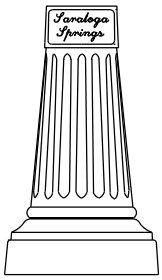

DECORATIVE BASE DETAIL

4 BOLTS AT 90 DEGREES 1" DIA x 36" LONG x 3" HOOK BOLTS TO HAVE A 4" PROJECTION OUT OF THE CONCRETE. BOLTS TO GE GALVANIZED

ANCHOR BASE DETAIL 12" BOLT CIRCLE 1 1/8" x 2" HOLES TO ACCOMODATE UP TO 1" DIA BOLT

28' ARTERIAL STREET LIGHT WITH BANNER ARM

DATE:	APRIL 2014
DRAWING NAME:	LP-3A
DRAWN BY:	CJG
CHECKED:	APPROVED:

REVISIONS

REV	DATE	BY	COMMENTS

SARATOGA SPRINGS CITY

1307 N. COMMERCE DR.
#200, SARATOGA SPRINGS,
UT 84045
PHONE: 801-766-9793
FAX: 8017669794

STANDARD DETAILS

STREET LIGHTS

LP-3A

NOTE!
IF DEPTH CANNOT BE MET
MASS MUST BE EQUIVALENT
TO MASS SHOWN

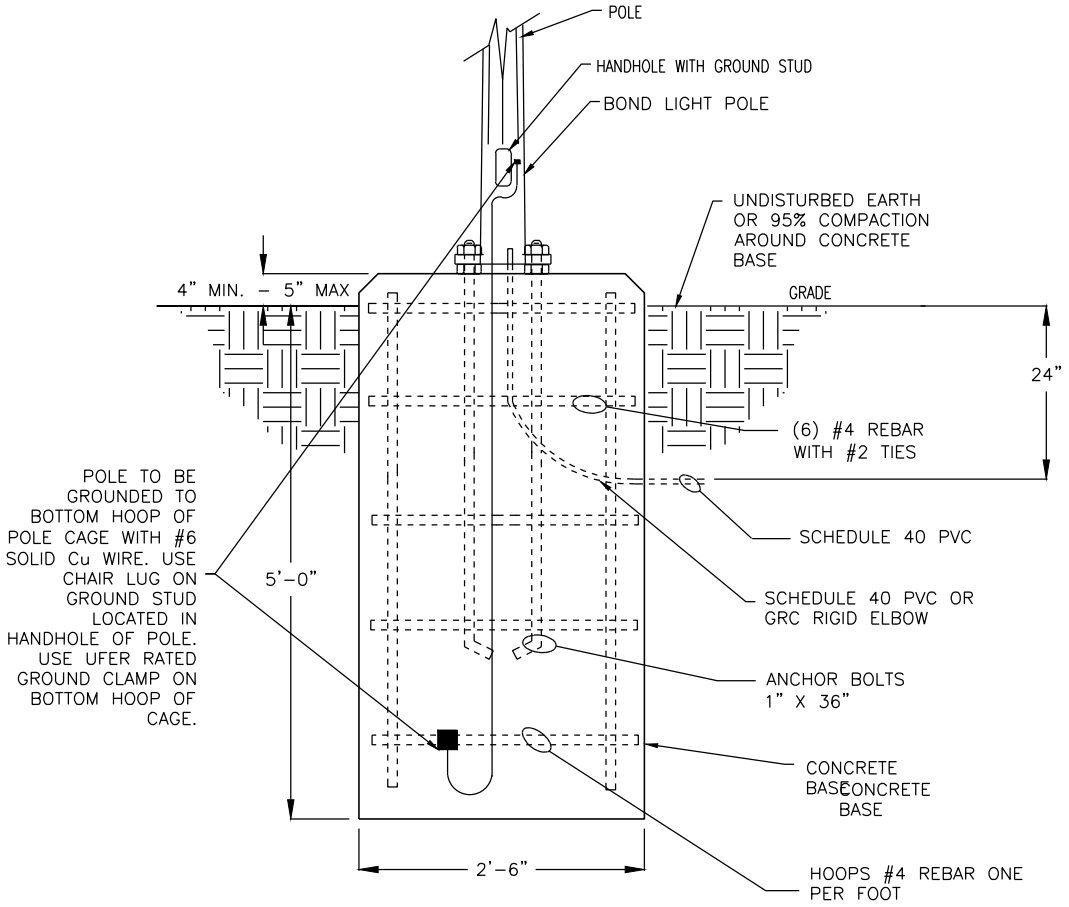

CONCRETE BASE DETAIL FOR 28' ARTERIAL

DATE:	APRIL 2014
DRAWING NAME:	LP-3B
DRAWN BY:	CJG
CHECKED:	APPROVED:

REVISIONS

REV	DATE	BY	COMMENTS

SARATOGA SPRINGS CITY

1307 N. COMMERCE DR.
#200, SARATOGA SPRINGS,
UT 84045
PHONE: 801-766-9793
FAX: 8017669794

STANDARD DETAILS

STREET LIGHTS

LP-3B

MSL ORDERING GUIDE

LIGHT FIXTURE: C12750A-80LED-120
PHOTOCELL: 6390TF-BK

Horizontal Arm
Mounting Adaptor

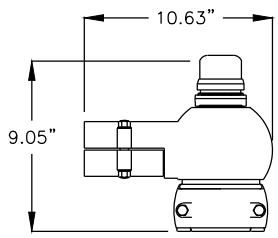

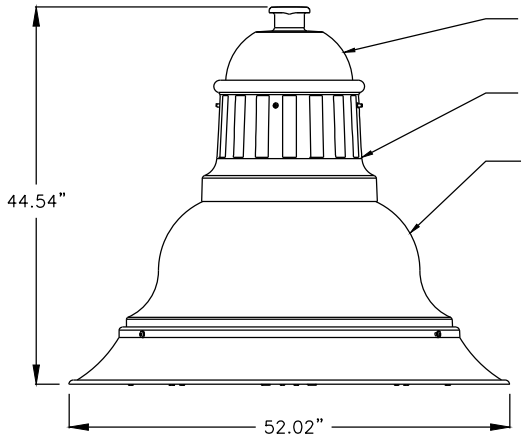

HOUSING:
LOW COPPER, CAST ALUMINUM
W/ INTEGRATED NECK

FLUTED SPINNING:
SPUN ALUMINUM

SHADE:
SPUN ALUMINUM

Philips LEDgine Specifications:

- 64, 4000K (NEUTRAL) PHILIPS LUMILEDs LUXEON R LEDs, TYPICAL 75 COLOR RENDERING INDEX (CRI), >65,000 HOURS OF OPERATIONAL LIFE (AT 25°C AMBIENT TEMPERATURE & 70% LUMEN MAINTENANCE), INJECTION MOLDED TYPE III OPTICAL PLATES.
- INTEGRAL PHILIPS ADVANCE XITANIUM LED DRIVER, CLASS 1, IP66 RATED, 350mA, INTELLIVOLT 120 VAC, 50-60 Hz, RoHS COMPLIANT, STANDARD BUILD IN >3kV SURGE SUPPRESSION.
- UL8750 & UL1598 COMPLIANT, ETL/cETL LISTED TO U.S. & CANADIAN SAFETY STANDARDS FOR WET LOCATIONS, MANUFACTURED TO ISO 9001:2008 STANDARDS, VIBRATION TESTED TO ANSI C136.31 FOR BRIDGE APPLICATIONS.

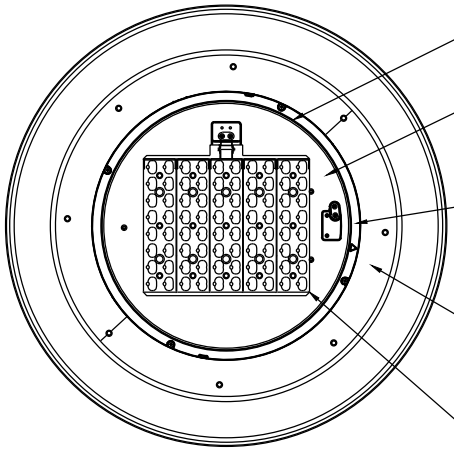

LENS: TEMPERED GLASS

HEAT SINK: LOW COPPER, DIE-CAST ALUMINUM

LENS FRAME: LOW COPPER, DIE-CAST ALUMINUM

DECORATIVE AIR VENT: PERFORATED, 14 GAUGE, #304 STAINLESS STEEL SHEET

PHILIPS LEDGINE BOARD, SEE SPECIFICATIONS

ARTERIAL STREET LIGHT LUMINARE

DATE: APRIL 2014

DRAWING NAME: LP-3C

DRAWN BY: CJG

CHECKED: APPROVED:

REVISIONS

REV	DATE	BY	COMMENTS

SARATOGA SPRINGS CITY

1307 N. COMMERCE DR.
#200, SARATOGA SPRINGS,
UT 84045
PHONE: 801-766-9793
FAX: 8017669794

STANDARD DETAILS

STREET LIGHTS

LP-3C

NOTES:

1. STREET LIGHTS POLES SHALL BE LOCATED AT ROADWAY INTERSECTIONS (NEAR FIRE HYDRANTS WHERE POSSIBLE) AND AT OTHER REQUIRED LOCATIONS PER CITY STANDARDS.

2. POLES ON COLLECTOR STREETS SHALL HAVE FLUTED SHAFTS.

3. POLES IN SUBDIVISIONS SHALL HAVE FLUTED SHAFTS.

4. MARK JUNCTION BOX LIDS "STREET LIGHTS".

5. INSTALL 1" PVC SCH 40 CONDUIT WITH 24" COVER AND SAND BEDDING.

6. WIRES FROM RMP SOURCE TO BE SINGLE CONDUCTOR (NOT DUPLEX) #6 AWG XHHW-2 COPPER WIRE IN COLORS NOTED ON DETAIL.

7. FUSE LIVE CONDUCTOR IN JUNCTION BOX.

8. CONTRACTOR TO INSTALL JUNCTION BOX WITH FUSE. BOX TO BE LOCATED 4' MIN AND 10' MAX FEET FROM RMP SOURCE. PROVIDE 1' SCH 40 PVC CONDUIT TO RMP SOURCE. PROVIDE CONDUCTORS LONG ENOUGH TO REACH RMP POWER SOURCE PLUS 5'. CONTRACTOR SHALL SUPPLY PULL STRING IN CONDUIT.

9. CONNECT GROUND WIRE TO METAL SHELL OF LIGHT POLE.

10. FUSE ASSEMBLY SHALL BE (1) BUSSMAN HEB-JJ, WITH (2) BUSSMAN 2A0660. NO SUBSTITUTIONS.

11. FUSE AT POLE SHALL BE BUSSMAN KTK OR EQUAL 5 AMPS PER FIXTURE HEAD, FUSE AT MAIN FUSE BOX SHALL BE 5 AMPS PER FIXTURE HEAD SERVED.

12. SQUID ASSEMBLY SHALL BE BLACKBURN USB335. NO SUBSTITUTIONS.

13. STREET LIGHTS ARE TO BE CENTERED IN PARK STRIPS

14. STREET LIGHTS ARE TO BE PLACED EVERY 300' ALTERNATING SIDES OF THE STREET AND AT ALL INTERSECTIONS

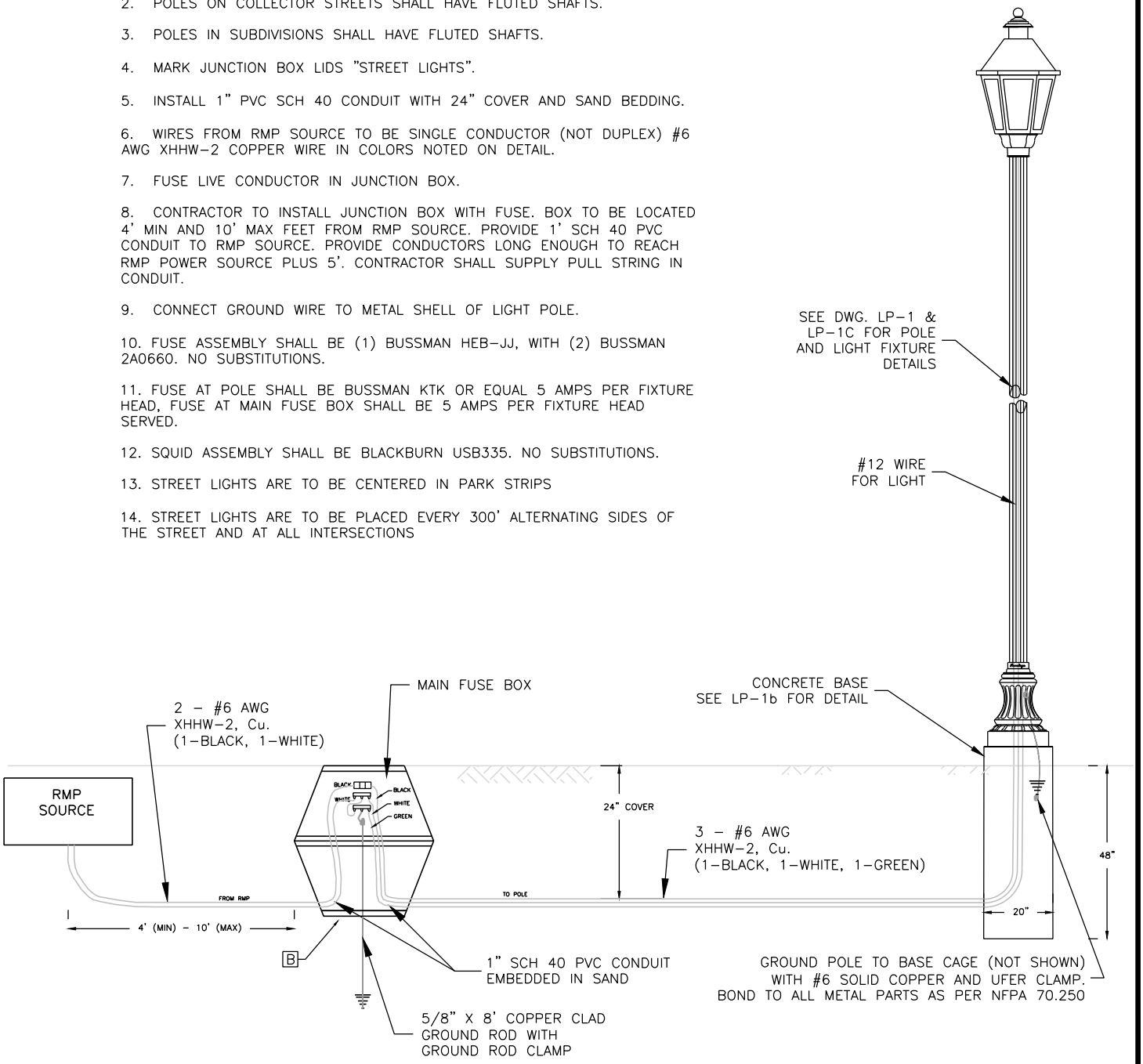

RESIDENTIAL STREET LIGHT CONNECTION DETAIL

DATE:	APRIL 2014
DRAWING NAME:	LP-4
DRAWN BY:	ETL
CHECKED:	APPROVED:

REVISIONS

REV	DATE	BY	COMMENTS

SARATOGA SPRINGS CITY

1307 N. COMMERCE DR.
#200, SARATOGA SPRINGS,
UT 84045
PHONE: 801-766-9793
FAX: 8017669794

STANDARD DETAILS

STREET LIGHTS

LP-4

COLLECTOR & ARTERIAL STREET LIGHT CONNECTION DETAIL

NOTES:

1. COMMERCIAL LIGHT POLES SHALL BE LOCATED AS INDICATED ON THE APPROVED LIGHTING SITE PLAN; AND AS DESCRIBED IN SECTION 05540 OF THE CITY STANDARDS.

2. LIGHT POLES AND LIGHT FIXTURES SHALL CONFORM TO THE REQUIREMENTS OF SECTION 05540 OF THE CITY STANDARDS; AND SHALL BE ACCEPTABLE TO THE CITY ENGINEER.

3. EACH LIGHT SHALL HAVE A JUNCTION BOX WITH A FUSE.

4. FUSE LIVE CONDUCTOR IN JUNCTION BOXES.

5. MARK JUNCTION BOX COVERS WITH "STREET LIGHTING".

6. INSTALL 1" SCH 40 PVC CONDUITS WITH 24" COVER AND SAND BEDDING.

7. WIRES FROM RMP POWER SOURCE TO JUNCTION BOXES TO BE SINGLE CONDUCTOR (NOT DUPLEX) # 6 AWG XHHW-2 Cu. IN COLORS NOTED ON DETAIL.

8. CONTRACTOR TO INSTALL JUNCTION BOX WITH FUSE, BOX TO BE LOCATED 4' MIN AND 10' MAX FROM RMP SOURCE. PROVIDE 1" SCH 40 CONDUIT TO RMP SOURCE. PROVIDE CONDUCTORS LONG ENOUGH TO REACH RMP POWER SOURCE PLUS 5'. CONTRACTOR SHALL SUPPLY PULL STRING IN CONDUIT.

9. CONNECT GROUND WIRE TO METAL SHELL OF LIGHT POLE.

10. FUSE ASSEMBLY SHALL BE (1) BUSSMAN HEB-JJ, WITH (2) BUSSMAN 2A0660. NO SUBSTITUTIONS.

11. FUSE AT POLE SHALL BE BUSSMAN KTK OR EQUAL 5 AMPS PER FIXTURE HEAD SERVED. FUSE AT MAIN FUSE BOX SHALL BE 5 AMPS PER FIXTURE HEAD SERVED.

12. SQUID ASSEMBLY SHALL BE BLACKBURN USB335. NO SUBSTITUTIONS

13. STREET LIGHTS ARE TO BE CENTERED IN PARK STRIPS

14. STREET LIGHTS ARE TO BE PLACED EVERY 300' ALTERNATING SIDES OF THE STREET AND AT ALL INTERSECTIONS

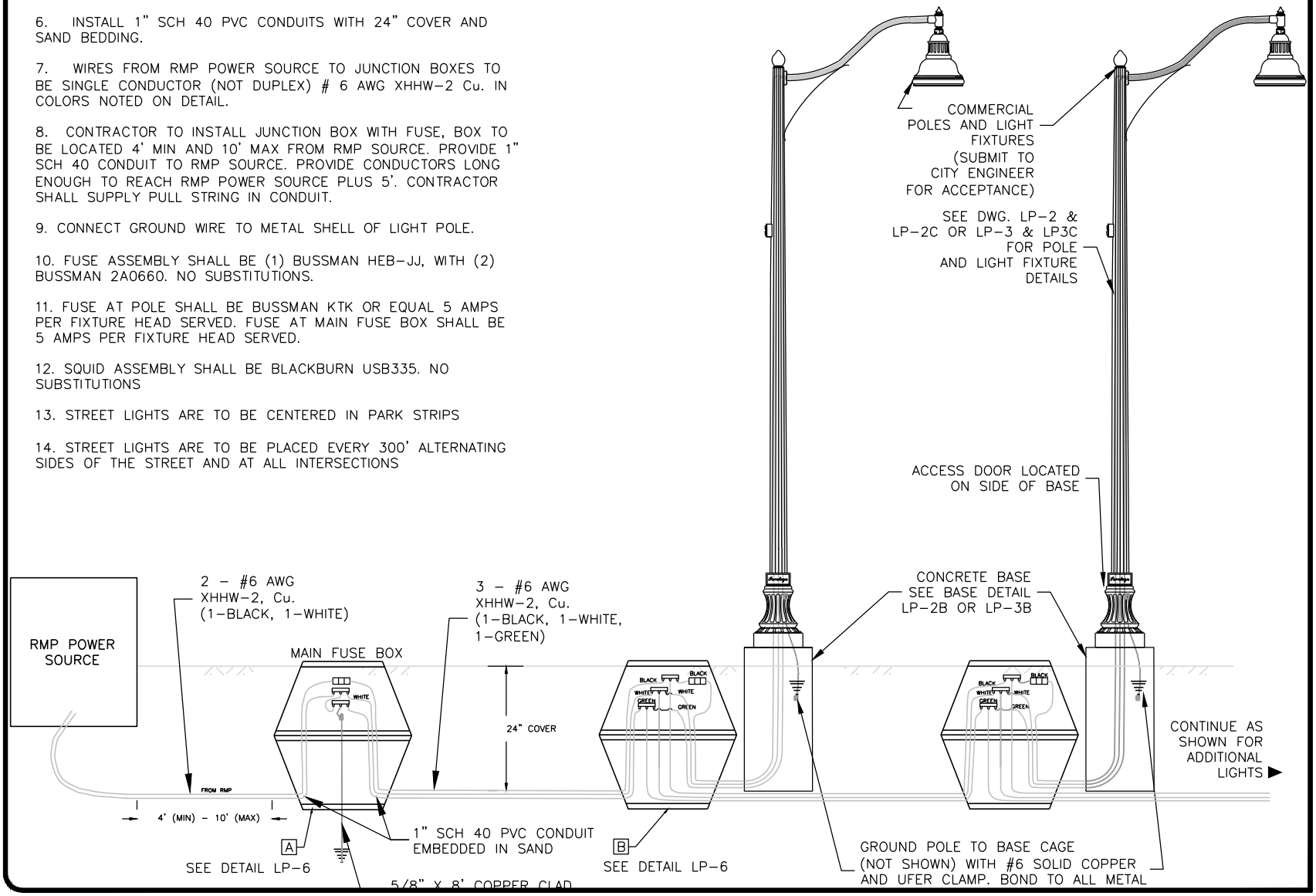

DATE: APRIL 2014
DRAWING NAME: LP-5
DRAWN BY: ETL
CHECKED:
APPROVED:

REV	DATE	BY	COMMENTS

REVISIONS

SARATOGA SPRINGS CITY

1307 N. COMMERCE DR.
#200 SARATOGA SPRINGS, UT 84045
PHONE: 801-766-9793
FAX: 8017669794

STANDARD DETAILS

STREET LIGHTS

LP-5

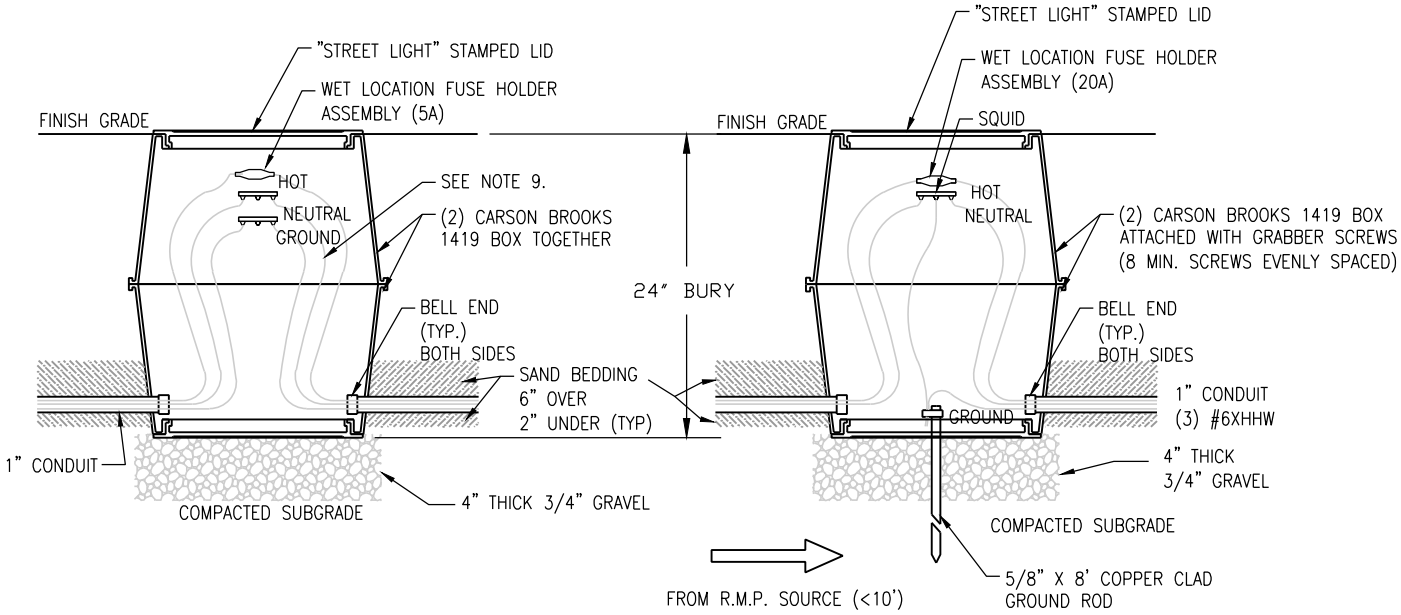

A **LIGHT POLE FUSE BOX DETAIL**

B **SERVICE CONNECTION FUSE BOX DETAIL**

NOTES:

1. FUSE BOX / SLICE BOX ASSEMBLY SHALL BE (2) CARSON BROOKS 1419 BOLTED TOGETHER 'CLAMSHELL' STYLE. DRILL 1/4" HOLES IN EVERY CELL OF LID ON BOTTOM BOX TO ALLOW DRAINAGE. INSTALL BOX ASSEMBLY ON 4" OF 3/4" GRAVEL. NO SUBSTITUTES.
2. FUSE ASSEMBLY SHALL BE (1) BUSSMAN HEB-JJ PN. 44229 WITH (2) BUSSMAN 2A0660. NO SUBSTITUTES.
3. WIRE CONNECTOR SHALL BE BLACKBURN USB33S SQUID PN. 2136122. NO SUBSTITUTES.
4. TERMINATE CONDUIT IN BOXES WITH BELL ENDS ATTACHED TO END OF CONDUITS.
5. ALL WIRE SHALL BE #6 CU XHHW UNLESS NOTED OTHERWISE.
6. 5/8" X 8' GROUND ROD REQUIRED AT SERVICE CONNECTION FUSE BOX.
7. LIGHT POLE FUSE BOX SHALL BE WITHIN 4' DOWNSTREAM OF POLE.
8. SERVICE CONNECTION FUSE BOX SHALL BE WITHIN 10' OF ROCKY MOUNTAIN POWER (RMP) SOURCE. CONFIRM INSTALLATION REQUIREMENTS WITH ROCKY MOUNTAIN POWER REPRESENTATIVE AND PACIFICORP'S LATEST SIX STATES ELECTRICAL SERVICE REQUIREMENTS DOCUMENT.
9. IF FIXTURE IS NOT INDICATED FOR INSTALLATION WITH CURRENT CONTRACT ONLY CONDUIT IS REQUIRED. SOME CONDUCTORS INDICATED MAY BE INSTALLED WITH FIXTURE UPGRADES.
10. SERVICE FUSE TO BE BUSSMAN KTK AND SIZED 5 AMPS PER FIXTURE. POLE FUSE TO BE BUSSMAN KTK 5 AMP PER FIXTURE.

LIGHT POLE BELOW GRADE BOXES INSTALLATION DETAILS

DATE:	APRIL 2014
DRAWING NAME:	LP-6
DRAWN BY:	ETL
CHECKED:	APPROVED:

REVISIONS

REV	DATE	BY	COMMENTS

SARATOGA SPRINGS CITY

1307 N. COMMERCE DR.
#200, SARATOGA SPRINGS,
UT 84045
PHONE: 801-766-9793
FAX: 8017669794

STANDARD DETAILS

LANDSCAPING

LP-6

PLAT NAME AND PHASE

LOCATED IN A PORTION OF THE _____ QUARTER OF SECTION__,
TOWNSHIP __ SOUTH, RANGE __ WEST,
SALT LAKE BASE AND MERIDIAN
SARATOGA SPRINGS CITY, UTAH COUNTY, UTAH

N

100 0 100 200

SCALE IN FEET

TYPICAL:1" = 30' MAX:1" = 100'

LEGEND

DATE OF PREPARATION

- EXISTING SECTION CORNER (FOUND) (AS DESCRIBED)
- PHASE 1 BOUNDARY LINE
- STREET CENTERLINE
- PROPOSED STREET MONUMENT
- MONUMENT TO MONUMENT TIE
- PROPOSED FIRE HYDRANT
- PROPOSED STREET LIGHT
- PARCEL DEDICATION TO SARATOGA SPRINGS
- EXISTING RIGHT-OF-WAY OVER THE WEST 33.00 FEET OF THE PROPERTY IN SECTION 2
- BUILDING SETBACK LINE
- PUBLIC UTILITY EASEMENTS

VICINITY MAP

VICINITY MAP

CENTERLINE CURVE TABLE

CURVE	RADIUS	LENGTH	DELTA	TANGENT	CHORD	CHORD BEARING
CL1	200.00	202.46	57°59'57"	110.86	193.92	N29°16'01"E
CL2	200.00	111.64	31°58'58"	57.32	110.20	S15°43'26"E
CL3	345.00	191.93	31°52'30"	98.52	189.47	S15°47'45"E

CURVE TABLE

CURVE	RADIUS	LENGTH	DELTA	TANGENT	CHORD	CHORD BEARING
C6	225.00	59.81	15°13'53"	30.08	59.64	N50°39'03"E
C7	15.00	13.62	52°01'12"	7.32	13.16	S32°15'24"W
C8	50.00	5.12	05°51'42"	2.56	5.11	N09°10'38"E

TYPICAL SETBACK & P.U.E. DETAILS

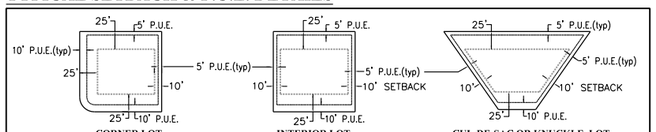

EXAMPLE ONLY: CHECK CITY ZONING ORDINANCES FOR SETBACK AND P.U.E STANDARDS

BY SIGNING THIS PLAT, THE FOLLOWING UTILITY COMPANIES ARE APPROVING THE: (A) BOARD COURSE, DIMENSIONS, AND INTENDED USE OF THE RIGHT-OF-WAY AND EASEMENT GRANTS OF RECORD; (B) LOCATION OF EXISTING UNDERGROUND AND UTILITY FACILITIES; (C) CONDITIONS OR RESTRICTIONS GOVERNING THE LOCATION OF THE FACILITIES WITHIN THE RIGHT-OF-WAY, AND EASEMENT GRANTS OF RECORD, AND UTILITY FACILITES WITHIN THE SUBDIVISION. "APPROVING" SHALL HAVE THE MEANING IN UTAH CODE SECTION 10-9A-603(4)(c)(ii).

QUESTAR GAS COMPANY	ROCKY MOUNTAIN POWER
Approved this ___ day of _____, A.D. 20____	Approved this ___ day of _____, A.D. 20____
QUESTAR GAS COMPANY	ROCKY MOUNTAIN POWER
COMCAST CABLE TELEVISION	**CENTURY LINK**
Approved this ___ day of _____, A.D. 20____	Approved this ___ day of _____, A.D. 20____
COMCAST CABLE TELEVISION	QWEST

REQUIRED PLAT NOTES

1–PLAT MUST BE RECORDED WITHIN 24 MONTHS OF FINAL PLAT APPROVAL BY CITY COUNCIL. FINAL PLAT APPROVAL WAS GRANTED ON THE __ DAY OF _____,20__.
2–THE INSTALLATION OF IMPROVEMENTS SHALL CONFORM TO ALL CITY RULES, ORDINANCES, REQUIREMENTS, STANDARDS, AND POLICIES REGARDING THE DEVELOPMENT OF THIS PROPERTY.
3–PRIOR TO BUILDING PERMITS BEING ISSUED, SOIL TESTING STUDIES MAY BE REQUIRED ON EACH LOT AS DETERMINED BY THE CITY BUILDING OFFICIAL.
4–PLAT MAY BE SUBJECT TO A MASTER DEVELOPMENT AGREEMENT, DEVELOPMENT AGREEMENT, SUBDIVISION AGREEMENT, OR SITE PLAN AGREEMENT. SEE CITY RECORDER FOR MORE INFORMATION.
5–BUILDING PERMITS WILL NOT BE ISSUED UNTIL ALL IMPROVEMENTS HAVE BEEN INSTALLED AND ACCEPTED BY THE CITY IN WRITING; ALL IMPROVEMENTS CURRENTLY MEET CITY STANDARDS; AND BONDS ARE POSTED BY THE CURRENT OWNER OF THE PROJECT PURSUANT TO CITY CODE.
6–ALL BONDS AND BOND AGREEMENTS ARE BETWEEN THE CITY, DEVELOPER/OWNER AND FINANCIAL INSTITUTION. NO OTHER PARTY, INCLUDING UNIT OR LOT OWNERS, SHALL BE DEEMED A THIRD–PARTY BENEFICIARY OR HAVE ANY RIGHTS INCLUDING THE RIGHT TO BRING ANY ACTION UNDER ANY BOND OR BOND AGREEMENT.
7–THE OWNER OF THIS SUBDIVISION AND ANY SUCCESSORS AND ASSIGNS ARE RESPONSIBLE FOR ENSURING THAT IMPACT AND CONNECTION FEES ARE PAID AND WATER RIGHTS ARE SECURED FOR EACH INDIVIDUAL LOT. NO BUILDING PERMITS SHALL BE ISSUED FOR ANY LOT IN THIS SUBDIVISION UNTIL ALL IMPACT AND CONNECTION FEES, AT THE RATES IN EFFECT WHEN APPLYING FOR BUILDING PERMIT, ARE PAID IN FULL AND WATER RIGHTS SECURED AS SPECIFIED BY CURRENT CITY ORDINANCES AND FEE SCHEDULES.
8–ALL OPEN SPACE AND TRAIL IMPROVEMENTS LOCATED HEREIN ARE TO BE INSTALLED BY OWNER AND MAINTAINED BY A HOMEOWNERS ASSOCIATION UNLESS SPECIFIES OTHERWISE ON EACH IMPROVEMENT
9–ANY REFERENCE HEREIN TO OWNERS, DEVELOPERS, OR CONTRACTORS SHALL APPLY TO SUCCESSORS, AGENTS, AND ASSIGNS.
10–IF SUBDIVISION HAS PRIVATE STREETS, PLAT MUST DESIGNATE STREET AS "PRIVATE" AND INCLUDE STATEMENT "NO CITY MAINTENANCE IS PROVIDED ON PRIVATE STREETS"
11–IF CONDO OR HOA ASSOCIATION IS INVOLVED PLAT MUST INCLUDE STATEMENT "LOTS/UNITS ARE SUBJECT TO ASSOCIATION BYLAWS, ARTICLES OF INCORPORATION AND CC&R'S"

PLAT REQUIREMENTS

–FINAL PLAT SHALL BE PREPARED ON A SHEET OF APPROVED REPRODUCIBLE D–SIZE MYLAR AND MADE WITH TEXT NOT LESS THAN ONE–TENTH INCH IN SIZE, SHALL BE SO DRAWN THAT THE TOP OF THE SHEET FACES EITHER NORTH OR EAST, WHICHEVER ACCOMMODATES THE DRAWING BEST.
–ACCURATE LINES MUST BE DRAWN FOR ALL LINES, ANGLES AND CURVES USED TO DESCRIBE BOUNDARIES, BLOCKS, LOTS, STREETS, ALLEYS, EASEMENTS, AREAS TO BE RESERVED FOR PUBLIC USE AND OTHER IMPORTANT FEATURES.
–BOUNDARY LINES SHALL BE DRAWN HEAVIER THAN STREET AND LOT LINES.
–MONUMENTS SHALL BE INSTALLED BY THE SUBDIVIDER'S ENGINEER OR LAND SURVEYOR AT SUCH POINTS DESIGNATED ON THE FINAL PLAT AS ARE APPROVED BY THE COMMUNITY DEVELOPMENT DEPARTMENT.
–MONUMENTS MUST BE PLACED PRIOR TO FINAL BOND RELEASE.
–THE UTAH COUNTY RECORDER'S OFFICE MAY HAVE ADDITIONAL REQUIREMENTS FOR THIS PLAT

ITEMS REQUIRED FOR PRELIMINARY PLAT:

–SECTION INFORMATION – TWO OR MORE CORNERS IF POSSIBLE
–BASIS OF BEARING CLEARLY LABELED
–BOUNDARY CLEARLY SHOWN AND DIMENSIONED WITH LEGAL DESCRIPTION
–POINT OF BEGINNING CLEARLY LABELED
–BENCHMARK FOR PROJECT HORIZONTAL AND VERTICAL CONTROLS
–BOUNDARY LINES OF ADJACENT TRACTS OF UN–SUBSIDIZED LAND
–EXISTING FIRE HYDRANTS WITHIN 500 FT
–EXISTING AND PROPOSED OPEN WATERWAYS
–EXISTING STREETS AND STREET LIGHTS SHOWN AND LABELED
–EXISTING FENCES ON OR ADJACENT TO PROPERTY
–EXISTING RIGHT–OF–WAY FOR UNDERGROUND FACILITIES
–EXISTING STREET LIGHTS
–THE 100–YR FLOOD LEVEL OF ALL WATERCOURSES INDICATED WITH VERTICAL DATUM
–SURROUNDING PROPERTY OWNERSHIP
–ALL PROPERTY UNDER THE CONTROL OF THE SUBDIVIDER MUST BE SHOWN EVEN THOUGH ONLY A PORTION IS BEING SUBDIVIDED.
–SKETCH OF THE PROSPECTIVE STREET SYSTEM OF THE UNPLATTED PARTS OF THE SUBDIVIDER'S LAND SHALL BE SUBMITTED
–LOCATION OF AND DIMENSIONS TO THE NEAREST BENCH MARK OR MONUMENT ON TWO OPPOSITE SIDES OF THE PLAT
–PROPERTIES LOCATED IN THE SENSITIVE LANDS OVERLAY ZONE
–TENTATIVE PLAN TO HANDLE STORM WATER DRAINAGE FOR SUBDIVISION
–LOT SIZE CLEARLY LABELED IN SQ. FT. & ACRES WITH LENGTH & WIDTH
–NORTH ARROW
–DRAWING SCALE CLEARLY MARKED AND NOT LESS THAN 1" = 100'
–AREAS WITH SLOPES LESS THAN 30%, 30–40%, 40–50% AND > 50%
–IDENTIFIED NATURAL HAZARDS, INCLUDING AREAS SUBJECT TO AVALANCHE, LIQUEFACTION, DEBRIS FLOWS, AND SURFACE FAULT RUPTURE
–WATER COURSES, NATURAL DRAINAGE CHANNELS, STORM WATER RUNOFF CHANNELS, GULLIES, STREAM BEDS, WETLANDS SHALL BE SHOWN

ITEMS REQUIRED FOR FINAL PLAT:

–INCLUDE ALL ITEMS REQUIRED ON PRELIMINARY PLAT (EXCEPT CONTOURS)
–STREET MONUMENTS
–BUILDING SETBACKS
–PUBLIC UTILITY EASEMENTS & ACCESS EASEMENTS
–PROPOSED STREET NAMES
–INTERSECTION ADDRESSES
–EXISTING & PROPOSED FIRE HYDRANTS
–LOT ADDRESSES
–EXISTING & PROPOSED STREET LIGHTS
–TYPICAL LOT DETAILS SHOWING BOTH CORNER AND INTERIOR LOTS
–VICINITY MAP
–PLAT NOTES
–PHYSICAL MARKERS SHALL BE PLACED AT EACH LOT CORNER
–IF PROPERTY CONTROLLED BY PUBLIC AGENT OR UTILITY COMPANY, APPROVAL FOR LOCATION, IMPROVEMENT, AND MAINTENANCE MUST BE SHOWN
–ELECTRONIC COPY THAT IS COMPATIBLE WITH CITY'S AUTOCAD MAPPING SYSTEM SHALL BE SUBMITTED

SURVEYOR'S CERTIFICATE

I, _____, do hereby certify that I am a registered Land Surveyor and that I hold a license, Certificate No. _____, in accordance with the Professional Engineers and Land Surveyors Licensing Act found in Title 58, Chapter 22 of the Utah Code. I further certify that by authority of the owners, I have made a survey of the tract of land shown on this plat and described below, have subdivided said tract of land into lots, streets, and easements, have completed a survey of the property described on this plat in accordance with Utah Code Section 17-23-17, have verified all measurements, and have placed monuments as represented on the plat. I further certify that every existing right-of-way and easement grant of record for underground facilities, as defined in Utah Code Section 54-8a-2, and for other utility facilities, is accurately described on this plat, and that this plat is true and correct. I also certify that I have filed, or will file within 90 days of the recordation of this plat, a map of the survey I have completed with the Utah County Surveyor.

BOUNDARY DESCRIPTION

A parcel of land situated in the ____ Quarter of Section ___, Township ___ South, Range ___ East, Salt Lake Base and Meridian, said parcel being more particularly described as follows:

Beginning at a point...

Acres: ____ # of lots _____

Date

Surveyor's Name
License no._____

OWNER'S DEDICATION

Know all men by these presents that _____, the _____ undersigned owner(s) of the above described tract of land having caused same to be subdivided into lots and streets to be hereafter known as

XXXXX

do hereby dedicate for the perpetual use of the public and/or City all parcels of land, easements, right-of-way, and public amenities shown on this plat as intended for public and/or City use. The owner(s) voluntarily defend, indemnify, and save harmless the City against any easements or other encumbrance on a dedicated street which will interfere with the City's use, maintenance, and operation of the street. The owner(s) voluntarily defend, indemnify, and hold harmless the City from any damage claimed by persons within or without this subdivision to have been caused by alterations of the ground surface, vegetation, drainage, or surface or sub-surface water flows within this subdivision or by establishment or construction of the roads within this subdivision.
In witness whereof ___ have hereunto set ___this _____ day of _____, A.D. 20_____.

OWNER'S ACKNOWLEDGMENT

STATE OF UTAH } S.S.
County of Utah

On the__day of____, A.D. 20__, personally appeared before me, the undersigned Notary Public, in and for the County of Utah in said State of Utah, the signer( ) of the above Owner's dedication, ___ in number, who duly acknowledged to me that _____ signed it freely and voluntarily and for the uses and purposes therein mentioned.

My commission expires:

Notary Public residing at

CORPORATE ACKNOWLEDGMENT

STATE OF UTAH } S.S.
County of UTAH

On the__day of ___, A.D., 20_, personally appeared before me __and, who being by me duly sworn did say each for himself, that he, the said __ is the President and he the said ____ is the Secretary of ___Corporation, and that the within and foregoing instrument was signed in behalf of said Corporation by authority of a resolution of its board of directors and said ____ and ____ each duly acknowledge to me that said Corporation executed the same and that the seal affixed is the seal of said Corporation.

My commission expires:

Notary Public residing at

APPROVAL BY LEGISLATIVE BODY

The City Council of the City of Saratoga Springs, County of Utah, approves this subdivision subject to the conditions and restrictions stated hereon, and hereby accepts the Dedication of all streets, easements, and other parcels of land intended for the public purpose of the perpetual use of the public.
This _____, day of _____, A.D. 20__.

City Mayor

Attest

City Recorder
(See Seal Below)

PLAT NAME AND PHASE

LOCATED IN A PORTION OF THE _____ QUARTER OF SECTION __,TOWNSHIP __ SOUTH, RANGE __ WEST,
SALT LAKE BASE AND MERIDIAN
SARATOGA SPRINGS CITY, UTAH COUNTY, UTAH

ENGINEERING/SURVEYING TITLE BLOCK

FIRE CHIEF APPROVAL	PLANNING COMMISSION REVIEW	SARATOGA SPRINGS ENGINEER APPROVAL	SARATOGA SPRINGS ATTORNEY	LEHI CITY POST OFFICE
Approved by the Fire Chief on this ___ day of _____, A.D. 20____	Reviewed by the Planning Commission on this ___ day of _____, A.D. 20____	Approved by the City Engineer on this ___ day of _____, A.D. 20____	Approved by Saratoga Springs Attorney on this ___ day of _____, A.D. 20____	Approved by Post Office Representative on this ___ day of _____, A.D. 20____
CITY FIRE CHIEF	CHAIRMAN, PLANNING COMMISSION	CITY ENGINEER	SARATOGA SPRINGS ATTORNEY	LEHI CITY POST OFFICE REPRESENTATIVE

SURVEYORS SEAL	NOTARY PUBLIC SEAL	CIVIL ENGINEERS SEAL	CLERK–RECORDER SEAL
			SP-1

STANDARD PLAT FOR USE
SARATOGA SPRINGS

CITY OF
SARATOGA SPRINGS

City Council Staff Report

Author: **Kevin Thurman, City Attorney**
Subject: **Proposed Amendments to Title 20 of the City Code**
Date: **June 17, 2014**
Type of Item: **Legislative, Policy Decision**

Summary Recommendation: Staff recommends adoption of the proposed amendments.

Description:

A. Topic: Amendments to Title 20 of the City Code.

B. Background: Title 20 was passed in 2010. Slight modifications were made in 2011 as part of the codification of the entire City Code. Through implementation and application of Title 20, it has become apparent that certain changes are necessary to update, streamline, and clarify the title.

The Council considered these changes at the May 6th work session and again at the June 3rd policy session. During the June 3rd policy session, the Council delegated to Councilors Baertsch and Call the responsibility to review the proposed changes carefully with myself. We met and discussed the proposed changes on June 5, 2014 and made several changes, which were mostly typographically and grammatical corrections. A version is attached to this staff report as Exhibit B that shows the modifications.

C. Analysis: Following is a basic summary of the proposed amendments:

1. Chapter 20.01:
    a. non-substantive, typographical corrections;
    b. adds definitions of positions in code enforcement;
        i. Code Enforcement Officer now includes building official, planning director, and inspectors;
    c. adds definition of substantial evidence;
    d. clarifies definitions;
    e. updates service of process section to be consistent with the Utah Code;
        i. Utah Code does not allow service by posting on property for zoning violations; and

f. definition of "owner" changed to include a "firm, association, organization, trust, partnership, limited liability company, corporation, or any entity."

2. Chapter 20.02:
    a. adds clarifications, such as state code violations are not subject to Title 20; City does not have authority to enforce state code violations administratively as State Legislature has dictated penalties;
    b. changes standard of proof from reasonable suspicion to substantial evidence;
        i. This is more consistent with administrative law.

3. Chapter 20.03:
    a. non-substantive clarifications and edits;
    b. changes to create flexibility with time period to comply (changed from 10 days to "as specified in the Notice of Violation");
    c. Civil penalties:
        i. Section 20.05.02 moved and combined with 20.03.08;
        ii. Fines are a set amount rather than a range;
        iii. Fines for traffic and parking reduced;
            1. Survey of cities found that most parking citations are $25 and traffic citations are $50.

4. Chapter 20.04:
    a. reorganizes some terms and provisions;
    b. clarifies duties and responsibilities;
    c. reassigns clerical responsibilities to staff;
    d. changes the standard of review from preponderance to substantial evidence, which is more consistent with administrative law;
    e. clarifies conditions under which hearsay evidence is admissible; and
    f. streamlines process when there is a failure to appear at a hearing.

5. Chapter 20.05:
    a. assigns certain clerical duties to staff;
    b. relocates some provisions;
    c. modifies provisions to protect City;
    d. removes provisions never used by City, such as a "Administrative Code Enforcement Hearing Program Abatement Superfund" and "Code Enforcement Administrative Fees and Cost Fund";

D. Conclusion: The attached amendments update, streamline, and clarify Title 20.

E. Department Review: Kevin Thurman and Councilors Baertsch and Call.

Recommendation: Staff recommends that the Council approve the amendments.

Attachments: Exhibit A: Ordinance Amending Title 20
Exhibit B: Compare Version Showing Changes Made During June 5, 2014 Meeting

EXHIBIT A
Ordinance Amending Title 20

ORDINANCE NO. 14 - (6-17-14)

AN ORDINANCE OF THE CITY OF SARATOGA SPRINGS, UTAH, AMENDING TITLE 20 OF THE CITY CODE PERTAINING TO ADMINISTRATIVE CODE ENFORCEMENT OF CITY CODE VIOLATIONS; AND ESTABLISHING AN EFFECTIVE DATE

WHEREAS, pursuant to authority granted in Utah Code Annotated § 10-3-701 *et seq*., the City Council for the City of Saratoga Springs may adopt and amend laws, ordinances, regulations, and codes that comprise the regulatory, penal ordinances, and administrative ordinances of the City of Saratoga Springs; and

WHEREAS, the City Council wishes to amend the rules, regulations, and procedures with respect to administrative enforcement of City Code violations; and

WHEREAS, the City Council has determined that it is in the best interest of the public health, safety, and welfare that the attached amendments to the City Code be adopted.

NOW THEREFORE, the City Council of the City of Saratoga Springs, Utah does hereby ordain as follows:

SECTION I – ENACTMENT

The amendments to Title 20 of the City Code attached as Exhibit A, incorporated herein by this reference, are hereby enacted.

SECTION II – AMENDMENT OF CONFLICTING ORDINANCES

If any ordinances, resolutions, policies, or zoning maps of the City of Saratoga Springs heretofore adopted are inconsistent herewith they are hereby amended to comply with the provisions hereof. If they cannot be amended to comply with the provisions hereof, they are hereby repealed.

SECTION III – EFFECTIVE DATE

This ordinance shall take effect upon its passage by a majority vote of the Saratoga Springs City Council and following notice and publication as required by the Utah Code.

SECTION IV – SEVERABILITY

If any section, subsection, sentence, clause, phrase, or portion of this ordinance is, for any reason, held invalid or unconstitutional by any court of competent jurisdiction, such provision shall be deemed a separate, distinct, and independent provision, and such holding shall not affect the validity of the remaining portions of this ordinance.

SECTION V – PUBLIC NOTICE

The Saratoga Springs Recorder is hereby ordered, in accordance with the requirements of Utah Code §§ 10-3-710—711, to do as follows:

a. deposit a copy of this ordinance in the office of the City Recorder; and
b. publish notice as follows:
   i. publish a short summary of this ordinance for at least one publication in a newspaper of general circulation in the City; or
   ii. post a complete copy of this ordinance in three public places within the City.

ADOPTED AND PASSED by the City Council of the City of Saratoga Springs, Utah, this __ day of _____, 2014.

Signed: _____
Jim Miller, Mayor

Attest: _____ _____
Lori Yates, City Recorder Date

VOTE

Shellie Baertsch _____
Rebecca Call _____
Michael McOmber _____
Bud Poduska _____
Stephen Willden _____

Title 20. ADMINISTRATIVE CODE ENFORCEMENT

Chapters:

20.01. General Provisions and Definitions.
20.02. General Authority and Offenses.
20.03. Administrative Code Enforcement Procedures.
20.04. Administrative Code Enforcement Hearing Procedures.
20.05. Administrative and Judicial Remedies.

Chapter 20.01. General Provisions and Definitions.

Sections:

20.01.01. Short Title.
20.01.02. Declaration of Purpose.
20.01.03. Scope.
20.01.04. Existing Law Continued.
20.01.05. Criminal Prosecution Right.
20.01.06. No Mandatory Duty—Civil Liability.
20.01.07. Definitions ~~Applicable to Title~~.
20.01.08. Acts Include Causing, Aiding, or~~and~~ Abetting.
20.01.09. Service of Process.
20.01.10. Constructive Notice of Recorded Documents.

20.01.01. Short Title.

This Title shall be known as "Administrative Code Enforcement." This Title shall also be known as Title 20 of the City of Saratoga Springs ~~Municipal~~ City Code. It may be cited and pleaded under either designation.

(Ord. 11-9; Ord. 09-10)

20.01.02. Declaration of Purpose.

The City Council of the City of Saratoga Springs finds that the enforcement of the Saratoga Springs ~~Municipal~~City Code throughout the City is an important public service. Code enforcement is vital to the protection of the public's health, safety, welfare, and quality of life. ~~The City Council recognizes that enforcement starts with the drafting of precise regulations that can be effectively applied in administrative code enforcement hearings and judicial proceedings. The City Council further finds that a~~A comprehensive code enforcement system that uses a combination of judicial and administrative remedies is critical to gaining compliance with ~~these~~City ordinances ~~regulations~~. ~~Failure to comply with an administrative code enforcement action may require the City Attorney to file a judicial action to gain compliance.~~

(Ord. 11-9; Ord. 09-10)

20.01.03. Scope.

The provisions of this Title may be applied to all violations of the City Code. It has been designed as an additional remedy for the City to use in achieving compliance ~~of~~with its ordinances and regulations.

(Ord. 11-9; Ord. No. 09-10)

20.01.04. Existing Law Continued.

The provisions of this Title do not invalidate any other title or ordinance, but shall be read in conjunction with those titles and ordinances as an additional remedy available for enforcement of those ordinances.
(Ord. 11-9; Ord. 09-10)

~~Section~~ 20.01.05. Criminal Prosecution Right.

The City has sole discretion in deciding whether to file a civil or criminal case for the violation of any of its ordinances. The enactment of this administrative remedy shall in no way interfere with the City's right to prosecute City ordinance violations as criminal offenses. The City may use any of the remedies available under the law in both civil and criminal prosecution. Although most minor City Code violations should be enforced through this Title, the City may choose to file a criminal prosecution under any of the following circumstances:

1. the violator has one prior violation of the City Code~~offense~~ within the last year;

2. the violation caused bodily injury, substantial bodily injury, or serious bodily injury to an individual, all of which shall have the same definition~~s as provided~~ in Utah Code § 76-1-601;

3. the violator, in a single criminal episode, violated one or more provisions of the Utah Criminal Code as well as one or more provisions of the City Code, and all violations are being charged as a single criminal episode as defined in Utah Code § 76-1-401;

4. the violator is being charged with any violation of Title 10 of the~~is~~ City Code; or

5. the violation caused a significant health or safety risk to the public.

(Ord. 11-9; Ord. 09-10)

~~Section~~ 20.01.06. No Mandatory Duty—Civil Liability.

It is the intent of the City Council that in establishing performance standards or establishing ~~an obligation~~ the authority to act by a City officer or employee, these standards shall not be construed as creating a mandatory duty if the officer or employee fails to perform his or her directed duty or duties.

(Ord. 11-9; Ord. 09-10)

~~Section~~ 20.01.07. Definitions ~~Applicable to Title~~.

The following words and phrases, whenever used in this Title, shall be constructed as defined in this Section, unless a different meaning is specifically defined elsewhere in this Title and specifically stated to apply:

1. **"Abatement"** means any action the City may take on public or private property and any adjacent property as may be necessary to remove or alleviate a violation, including demolition, removal, repair, boarding, and securing or replacement of property.

2. **"Administrative Law Judge"** means the administrative law judge presiding over the ~~Civil Traffic~~Administrative Code Enforcement Program established pursuant to Chapter 3.11~~2~~ of the City Code.

3. **"~~Administrative code enforcement order~~Administrative Law Judge Order"** means an order issued by an Administrative Law Judge~~a hearing officer~~. The order may include an order to abate the violation, pay civil penalties and administrative costs, or take any other action as authorized or required by this Title and ~~applicable state codes~~City ordinances.

4. **"City"** means the area within the territorial city limits of the City of Saratoga Springs.

~~4.~~5. **"City Code"** means any ordinance passed by the City Council and any other Title, ordinance, regulation, or amendment lawfully codified pursuant to Utah law including Utah Code § 10-3-707.

~~5.~~6. **"City Council"** means the City Council of the City of Saratoga Springs.

7. **"Code Enforcement Coordinator"** means the person who has been designated by the Saratoga Springs City Manager to coordinate and schedule hearings, mail out notices of hearings, send out notices of costs and itemized bills, and perform other duties as specified in this Title.

~~6. **"Code enforcement tax lien"** means a lien recorded to collect outstanding civil penalties, administrative fees, and costs.~~

8. **"Code Enforcement Officer"** means any person designated by the City Manager with the responsibility to enforce the City Code and ordinances passed by the City Council and who performs the duties specified herein. The Code Enforcement Officer may or may not be a member of the Saratoga Springs Police Department. Code Enforcement Officers include the City Building Official, Planning Director, City Building and Engineering Inspectors, and their designees.

9. **"Code enforcement performance bond"** means a bond posted by a responsible person to ensure compliance with the City Code, applicable state law, a judicial action, or an ~~administrative code enforcement order~~Administrative Law Judge Order.

~~7.~~10. **"Code enforcement tax lien"** means a lien recorded to collect outstanding civil penalties, administrative fees, and costs.

~~8. **"Enforcement official"** means any person authorized to enforce violations of the City Code or applicable state codes.~~

~~9.~~11. **"Financial institution"** means any person that holds a recorded mortgage or deed of trust on a property.

~~10.~~12. **"Good cause"** means incapacitating illness, death, lack of proper notice, unavailability due to unavoidable, unpreventable, or extenuating emergency or circumstance, imminent and irreparable injury, and acts of nature adverse to performing required acts.

~~11.~~13. **"Imminent life or safety hazard"** means any condition that creates a present, extreme, and immediate danger to life, property, health, or public safety.

~~12.~~14. **"Legal interest"** means any interest that is represented by a document, such as a deed of trust, quitclaim deed, mortgage, judgment lien, tax or assessment lien, mechanic's lien, or other similar instrument that is recorded with the County Recorder.

~~13.~~15. **"Notice of compliance"** means a document issued by the City~~,~~ representing that a property complies with the requirements outlined in ~~the~~a notice of violation, administrative citation, or Administrative Law Judge Order.

~~14.~~16. **"Notice of satisfaction"** means a document or form ~~approved by the Administrative Law Judge or his or her designee~~ that indicates that all outstanding civil penalties and costs have been either paid in full, or that the City has negotiated an agreed amount, or that a subsequent administrative or judicial decision has resolved the outstanding debt. In addition to the satisfaction of the financial debt, the property must also be in compliance with the requirements outlined in the notice of violation.

~~15.~~17. **"Notice of violation"** means a written notice prepared by a Code Enforcement Officer~~an enforcement official~~ that informs a responsible person of code violations and orders them to take certain steps to correct the violations.

~~16.~~18. **"Oath"** includes affirmations and oaths.

~~17.~~19. **"Ordinance Enforcement Administrator"** means the supervisor of the Ordinance Enforcement and Animal Control Division as designated by the City Manager.

~~18.~~20. **"Person"** means any ~~natural~~ person, firm, joint venture, joint stock company, partnership, association, club, company, corporation, business, trust, organization, or the manager, lessee, agent, sergeant, officer, or employee of any of them, or any other entity that is recognized by law as the subject of rights or duties.

~~19.~~21. **"Property owner"** means the record owner of real property based on the county recorder's records.

~~20.~~22. **"Public nuisance"**:

a. means any condition caused, maintained, or permitted to exist that constitutes a threat to the public's health, safety, and welfare, or that significantly obstructs,

injures, or interferes with the reasonable or free use of property in a neighborhood or community or by any considerable number of persons; and

b. also has the same meaning as set forth in the Utah Code or Utah common law.

~~21.~~ **"Responsible person"** means a person including the property owner and any person or entity, whether as owner, agent, or occupant, who commits, aids in committing, contributes to, causes, supports, retains, or permits a City Code violation in the City, regardless of whether that violation occurs on real property. Every successive owner or tenant of a property or premises who fails to correct a City Code violation upon or in the use of property or premises caused by a former owner or tenant is also a responsible person. In cases where there is more than one responsible person, the City may proceed against one, some, or all of them. ~~is responsible for causing or maintaining a violation of the City Code or applicable state codes.~~

~~a. The property owner, tenant, person with a legal interest in the real property, or person in possession of the real property, shall be liable for any violation maintained on the property.~~

~~b. In all cases, the property owner shall be considered a Responsible Person.~~

23.

24. **"Substantial Evidence"** means relevant, reliable, factual, and credible evidence that is sufficient to convince a reasonable mind that a violation of the City Code has been committed. Substantial evidence does not mean that all or the majority of the evidence is in support of the decision made.

~~22.~~25. **"Written"** includes handwritten, typewritten, photocopied, computer printed, or facsimile.

(Ord. 11-9; Ord. 09-10)

20.01.08. Acts Include Causing, Aiding, or~~and~~ Abetting.

Whenever any act or omission is made unlawful in this Title, it shall include causing, permitting, aiding, or abetting such act or omission.

(Ord. 11-9; Ord. 09-10)

20.01.09. Service of Process.

1. Except for violations of Title 19, ~~W~~whenever service is required to be given under this Title for enforcement purposes, ~~the~~a Code Enforcement Officer or the Code Enforcement Coordinator (or designees) shall serve the document ~~shall be served~~ by any of the following methods, unless ~~different provisions are~~ otherwise ~~specifically stated to apply~~provided:
    a. Regular mail, postage prepaid, to the last known address of the owner(s) or other responsible person(s);
    b. Posting the notice conspicuously on or in front of the property. If not inhabited,

the notice must also be mailed as described in (a) above~~. The form of the posted notice shall be approved by the Ordinance Enforcement Administrator or his or her designee~~;

c. Personal service pursuant to Utah Rule~~s~~ of Civil Procedure ~~Rule~~ 4; or

d. Published in a newspaper of general circulation where the identity or whereabouts of the person to be served are unknown and cannot be ascertained through reasonable diligence, where service is impracticable under the circumstances, or where there exists good cause to believe that the person to be served is avoiding service of process.

2. For violations of Title 19, or any land use ordinance as defined in Utah Code Section 10-9a-102, whenever service is required to be given under this Title for enforcement purposes, the document shall be served in accordance with Utah Code § 10-9a-803, as amended, which requires written notice, by mail or hand delivery, of each ordinance violation to the address of the owner of record on file in the office of the county recorder or person designated in writing by the owner of record as the owner's agent for the purpose of receiving notice of an ordinance violation.

3. Service by regular mail in the manner described above shall be deemed served three business days, not including the day it was mailed, ~~on the third day~~ after the date of mailing.

4. If service complies with the requirements of this Section, it shall be deemed a valid service even if a party claims not to have received the service and it shall not affect the validity of any proceedings taken under this Title.

5. The failure to serve all responsible person(s) shall not affect the validity of any proceedings.

(Ord. 11-9; Ord. 09-10)

20.01.10. Constructive Notice of Recorded Documents.

Whenever a document is recorded with the County Recorder as authorized or required by this Title or applicable state codes, recordation shall provide constructive notice of the information contained in the recorded documents.

(Ord. 11-9; Ord. 09-10)

Chapter 20.02. General Authority and Offenses.

Sections:

20.02.01. General Enforcement Authority.
20.02.02. Adoption of Policy and Procedures.
20.02.03. Authority to Inspect.
20.02.04. Power to Cite.
20.02.05. False Information or Refusal Prohibited.
20.02.06. Failure to Obey a Subpoena.

20.02.01. General Enforcement Authority.

1. Whenever ~~the Ordinance Enforcement Administrator or enforcement official~~a Code Enforcement Officer finds that a violation of the City Code or ~~applicable state codes~~City ordinances has occurred or continues to exist, the appropriate administrative enforcement procedure may be used as outlined in this Title.

2. ~~The~~So long as authorized in this Title, a ~~Ordinance Enforcement Administrator or any designated enforcement official has~~Code Enforcement Officer has the authority and power necessary to gain compliance with the provisions of the City Code and ~~applicable state codes~~City ordinances. These powers may include the power to issue notices of violation and administrative citations, inspect public and private property, abate violations on public and private property, and use whatever judicial and administrative remedies are available under the City Code or applicable state law.

(Ord. 11-9; Ord. 09-10)

20.02.02. Adoption of Policy and Procedures.

The Administrative Law Judge is authorized to develop policies and procedures relating to the hearing procedures, scope of hearings, and subpoena powers subject to the requirements of this Title, ~~and~~ City Code, and state law. The City Council shall determine other matters relating to the Administrative Code Enforcement Hearing Program.

(Ord. 11-9; Ord. 09-10)

20.02.03. Authority to Inspect.

1. A ~~The Ordinance Enforcement Administrator or any designated enforcement official is~~ Code Enforcement Officer is authorized to enter upon any property or premises to ascertain whether the provisions of the City Code or ~~applicable state codes~~City ordinances are being obeyed and to make any examinations and surveys as may be necessary in the performance of the enforcement duties. This may include the taking of photographs, samples, or other physical evidence.

2. All inspections, entries, examinations, and surveys shall be done in a reasonable manner based upon cause. Except as otherwise authorized in this Title, ~~I~~if the responsible person refuses to allow ~~the enforcement official~~a Code Enforcement Officer to enter the property, then the Code Enforcement Officer ~~enforcement official~~ shall obtain a search warrant or other judicial order.

(Ord. 11-9; Ord. 09-10)

20.02.04. Power to Cite.

Each Code Enforcement Officer ~~The Ordinance Enforcement Administrator or any designated enforcement official~~ is authorized to cite any person whenever there is ~~reasonable suspicion~~substantial evidence to believe that the person has committed a violation of the City Code or ~~applicable state codes~~City ordinances.

(Ord. 11-9; Ord. 09-10)

20.02.05. False Information or Refusal Prohibited.

It shall be unlawful for any person to willfully make a false statement or refuse to give his or her name or address with intent to deceive or interfere with a city employee when in the performance of his or her official duties under the provisions of this Title. A violation of this Section is a class ~~B~~C misdemeanor.

(Ord. 11-9; Ord. 09-10)

20.02.06. Failure to Obey a Subpoena.

It is unlawful for any person to refuse or fail to obey a subpoena issued for an administrative code enforcement hearing. Failure to obey a subpoena constitutes contempt and may be prosecuted as a class ~~B~~C misdemeanor.

(Ord. 11-9; Ord. 09-10)

Chapter 20.03. Administrative Code Enforcement Procedures.

Sections:

20.03.01. Authority.
20.03.02. Notice of Violation; Administrative Abatement.
20.03.03. Failure to Bring Property into Compliance.
20.03.04. Inspections.
20.03.05. Emergency Abatement.
20.03.06. Demolitions.
20.03.07. Administrative Citations.
20.03.08. Civil Penalties, Fines, and Fees.
20.03.09. Animal Citations.

20.03.01. Authority.

Any condition caused, maintained, or permitted to exist in violation of any provisions of the City Code or City ordinances ~~or applicable state codes~~ that constitutes a violation may be abated by the City pursuant to the procedures set forth in this ~~Part~~Chapter.

(Ord. 11-9; Ord. No. 09-10)

20.03.02. Notice of Violation; Administrative Abatement.

1. Whenever ~~the Ordinance Enforcement Administrator or any designated enforcement official~~a Code Enforcement Officer determines that a violation of the City Code or ~~applicable state codes~~City ordinances ~~-~~has occurred or continues to exist, ~~the Administrator or enforcement official~~the Code Enforcement Officer may choose to proceed under these administrative abatement procedures.

~~1.~~2. If ~~this~~the administrative abatement procedure is used, a notice of violation shall be issued to ~~a~~ the responsible person. The notice of violation shall include the following information:

   a. name of ~~property owner~~responsible person;
   b. street address or location of violation;
   c. date violation observed;
   d. all codes or ordinances ~~sections~~ violated and ~~description~~ an explanation as to how the code or ordinance was violated~~of condition of the property that violates the applicable codes~~;
   e. a statement explaining the type of remedial action required to permanently correct outstanding violations, which may include corrections, repairs, demolition, removal, or other appropriate action;
   f. specific date to correct the violations listed in the notice of violation, which date shall be at least ten calendar days from the date of service;
   g. explanation of the consequences if the responsible person fails to comply with the terms and deadlines as prescribed in the notice of violation, which may include~~:~~ criminal prosecution~~;~~, civil penalties~~;~~, administrative citations, revocation of

permits~~;~~, recordation of the notice of violation on the property~~;~~, withholding of future municipal permits~~;~~, abatement of the violation~~;~~, costs~~;~~, administrative fees~~;~~, and any other legal remedies;

h. a statement that civil penalties will begin to accrue or be imposed immediately on expiration of the date to correct violations;

i. the amount of the civil penalty on each violation and a statement as to whether ~~that~~ the penalty will accrue daily until the property is brought into compliance;

j. that only one notice of violation is required for any 12-month period, and that civil penalties or fines will begin or be imposed immediately upon any subsequent violations of the notice; and

k. procedures to request a hearing as provided in Section 20.04.03 and consequences for failure to request one.

~~2.~~3. The responsible person may request a hearing on renewed violations by following the same procedure as provided for in the original notice.

~~3.~~4. The notice of violation shall be served by one of the methods of service listed in Section 20.01.09 of this Title.

~~4.~~5. More than one notice of violation may be issued against the same responsible person if it encompasses different dates or different violations.

(Ord. 11-9; Ord. 09-10)

20.03.03. Failure to Bring Property into Compliance.

If ~~a~~ the responsible person fails to bring a violation into compliance within the time specified in the Notice of Violation, ~~ten days of service of the notice of violation,~~ civil penalties as provided in Section 20.03.08 shall be owed to the City ~~for each and every subsequent day of violation~~.

(Ord. 11-9; Ord. 09-10)

20.03.04. Inspections.

1. It shall be the duty of the responsible person served with a Notice of Violation to request an inspection when his or her property has been brought into compliance. It is prima facie evidence that the violation remains on the property if no inspection is requested.

2. Civil penalties accumulate daily until the property has been inspected and a notice of compliance is issued.

3. Reinspection fees shall be assessed if more than one inspection is necessary.

(Ord. 11-9; Ord. 09-10)

20.03.05. Emergency Abatement.

1. **Authority.**
   a. Whenever the Ordinance Enforcement Administrator determines that an imminent life or safety hazard exists that requires immediate correction or elimination, the Ordinance Enforcement Administrator may exercise the following powers without prior notice to the responsible person:
      i. order the immediate vacation of any tenants, and prohibit occupancy until all repairs are completed;
      ii. post the premises as unsafe, substandard, or dangerous;
      iii. board, fence, or secure the building or site;
      iv. raze and grade that portion of the building or site to prevent further collapse, and remove any hazard to the general public;
      v. make ~~any minimal~~ emergency repairs as necessary to eliminate any imminent life or safety hazard; or
      vi. take any other action appropriate to eliminate the emergency.
   b. The Ordinance Enforcement Administrator has the authority, based on cause, to enter the property without a search warrant or court order to accomplish the above listed acts to abate the safety hazard.
   c. The responsible person shall be liable for all costs associated with the abatement of the life safety hazard. Costs may be recovered pursuant to this Title.

2. **Procedures.**
   a. The Ordinance Enforcement Administrator shall pursue only the minimum level of correction or abatement as necessary to eliminate the immediacy of the hazard. Costs incurred by the City during the emergency abatement process shall be assessed and recovered against the responsible person through the procedures outlined in Chapter 20.05 of this Title.
   b. The Ordinance Enforcement Administrator may also pursue any other administrative or judicial remedy to abate any remaining violations.

3. **Notice of Emergency Abatement.**
   a. After an emergency abatement, the City shall notify the owner or responsible person of the abatement action taken.
   b. ~~This~~ The notice shall be served within ten days of completion of the abatement.

(Ord. 11-9; Ord. 09-10)

20.03.06. Demolitions.

1. **Authority.** Whenever the Ordinance Enforcement Administrator, Chief Building Officer, or Fire Inspector determines that a property or building requires demolition, any one of them may order ~~demolish~~demolition- or remov~~e~~al of the offending structure, or exercise any or all of the powers listed in Section 20.03.05, once appropriate notice has been given to a responsible person pursuant to applicable building codes, fires codes, and state law. The responsible person shall be liable for all costs associated with the demolition. Costs

may be recovered pursuant to this Title.

2. **Procedures.** Once ~~the Ordinance Enforcement Administrator has determined that the City Chief Building Inspector or the Fire Marshall has complied with~~ all of the notice requirements of the applicable laws have been met, the property will be abated pursuant to the abatement remedy. Other applicable remedies may also be pursued.

(Ord. 11-9; Ord. No. 09-10)

20.03.07. Administrative Citations.

1. **Declaration of Purpose.**
   a. The City Council finds that there is a need for an alternative method of enforcement for minor violations of the City Code. The City Council further finds that an appropriate method of enforcement is an administrative citation program.
   b. The procedures established herein shall be in addition to criminal, civil, administrative, or any other legal remedy established by law that may be pursued to address violations of the City Code or ~~applicable state codes~~City ordinances.

2. **Authority.**
   a. Any person violating any provision of the City Code or ~~applicable state codes~~City ordinances may be issued an administrative citation by ~~an enforcement official~~a Code Enforcement Officer as provided in this Section.
   b. A civil penalty shall be assessed by means of an administrative citation issued by the ~~enforcement official,~~Officer and shall be payable directly to the City Treasurer's Office.
   c. Penalties assessed by means of an administrative citation shall be collected in accordance with the procedures specified in Chapter 20.05 of this Title.

3. **Procedures.**
   a. Upon discovering any violation of the City Code or ~~applicable state codes~~City ordinances, a Code Enforcement Officer~~an enforcement official~~ may issue an administrative citation to ~~a~~ the responsible person in the manner prescribed in this Section.
   b. The administrative citation shall be issued on a form meeting the requirements of subsection 20.03.07(4) of this Title.~~approved by the Administrative Law Judge~~. ~~If the responsible person is a business, the enforcement official~~~~Code Enforcement Officer~~ ~~shall attempt to locate the business owner and issue an administrative citation to the business owner. If the enforcement official~~~~Code Enforcement Officer~~ ~~can only locate the manager of the business, the administrative citation may be given to the manager of the business. A copy of the administrative citation may also be mailed to the business owner or any other responsible person in the manner prescribed in Section 20.01.09 of this Title.~~
   c. Once the responsible person has been located, the Code Enforcement Officer ~~enforcement official~~ shall attempt to obtain the signature of that person on the administrative citation. If the responsible person refuses or fails to sign the administrative citation, the failure or refusal ~~to sign~~ shall not affect the validity of

the citation and subsequent proceedings. If the Code Enforcement Officer ~~enforcement official~~ is unable to locate the responsible person for the violation, then the administrative citation shall be mailed to the responsible person in the manner prescribed in Section 20.01.09 of this Title.

d. Except for Title 19 violations as specified in Section 20.01.09, ~~I~~if no one can be located at the property, then the administrative citation may be posted in a conspicuous place on or near the property and a copy subsequently mailed to the responsible person in the manner prescribed in Section 20.01.09 of this Title.

e. The administrative citation shall also contain the signature of the Code Enforcement Officer~~enforcement official~~.

f. The failure of any person with an interest in the property to receive notice shall not affect the validity of any proceedings taken under this Part, except for Title 19 violations as specified in Section 20.01.09.

4. **Contents of Administrative Citation.** An administrative citation shall include:

a. the date and location of the violations and the approximate time the violations were observed;

b. the Code sections violated and the ~~titles~~ subject matter of those sections;

c. the amount of penalty imposed for the violations;

d. an explanation as to how the penalty shall be paid, the time period by which the penalty shall be paid, and the consequences of failure to pay the penalty;

e. notice of the right and the procedures to request a hearing; ~~and~~

f. the signature of the Code Enforcement Officer ~~enforcement official~~ and the signature of the responsible person, if he or she can be located, as outlined in Section 20.03.07(3)(~~d~~c) of this Title; and~~.~~

g. any other information deemed helpful or necessary by the Code Enforcement Administrator.

(Ord. 11-9; Ord. 09-10)

20.03.08. Civil Penalties, Fines, and Fees.

~~The City Council shall establish policies to assist in the assessment of civil penalties, fines, and fees.~~

1. **In General**. As specified in the notice of violation or administrative citation, ~~C~~civil penalties ~~shall~~may be assessed on a daily basis until the violation is corrected or immediately if ~~for each violation listed on the~~an administrative citation is issued. Interest shall be assessed per City policy on all outstanding civil penalties balances until the case has been paid in full. The City may use one form for both notices of violation and administrative citations. Payment of the penalties, fines, and fees shall not excuse the failure to correct the violations, nor shall it bar further enforcement action by the City if the violation is not corrected.

2. **Amount**. Unless specified otherwise in the more specific section of the City Code or the City's Consolidated Fee Schedule, ~~T~~the penalties shall be as follows:

a. Fees for General City Code Violations:

~~a.~~i. Administrative Citations:

~~i.~~A. First Offense: $100~~—$200;~~

ii. Second Offense (within one year from first offense): $200 $400;

B.

iii. Third (or more) Offense (within one year from first offense): $400 $1,000;

C.

ii. Civil Penalties per Notice of Violation or Administrative Law Judge Order:

b.A. $25 per day per violation, accruing until the violation is brought into compliance; and

b. Fees for Violations of Title 13, Traffic and Parking:

i. Parking Violations:

A. Administrative Citations:

I. First Offense: $25

II. Second Offense (within one year from first offense): $50

III. Third (or more) Offense (within one year from first offense): $100

B. Civil Penalties per Notice of Violation or Administrative Law Judge Order:

I. $25 per day per violation, accruing until the violation is brought into compliance.

ii. Traffic Violations:

A. Administrative Citations:

I. First Offense: $50

II. Second Offense (within one year from first offense): $100

III. Third (or more) Offense (within one year from first offense): $150

B. Civil Penalties per Notice of Violation or Administrative Law Judge Order:

I. $25 per day per violation, accruing until the violation is brought into compliance.

c. Hearing Fee for Default Hearings or Administrative Code Enforcement Hearings: $100 (if Responsible Person is unsuccessful or fails to appear after proper notice).

Payment of the penalties, fines, and fees shall not excuse the failure to correct the violations, nor shall it bar further enforcement action by th

3. **Non-Payment of Citation**.

a. If the responsible person fails to make any payments within the time period specified in the notice, the City may send additional notices, file a small claims action, refer the matter to a collection agency, or pursue any remedy in law or equity.

1.b.Interest may be assessed on all outstanding amounts at a rate of up to 20% per annum.

c. The City has the authority to collect all costs associated with the filing of such actions, including administrative fees and service costs.

4. **Modification of Civil Penalties.**

a. Upon completion of the required action pursuant to the notice of violation, administrative citation, or administrative enforcement order, the Administrative Law Judge may modify the civil penalties on a finding of good cause as defined in this Title.

b. Civil penalties may be waived or modified by the Administrative Law Judge if there is a finding of good cause based on the responsible person's claim of nonconforming use, as defined per state law, or conditional use, as defined by the City Code, and:

   i. the City's ability to verify the claim; or

   ii. the responsible person's filing of an application for either use before the date of the Notice of Violation or Administrative Citation.

c. **Reductions and Waivers for Animal Violations.**

   i. The Code Enforcement Coordinator and Administrative Law Judge may grant reductions and waivers of fines for animal violations under the following circumstances:

      A. Licensing and rabies fines may be dismissed upon proof that the violation has been corrected.

      B. $25.00 reduction may be given for first time offenders with good cause.

      C. Offenders with a history of non-payment should generally not receive a reduction or waiver of fines or fees.

      D. At the City's discretion, flexible monthly plans may be set up according to responsible person's needs.

      E. Fines may be dismissed if the animal in violation is deceased.

(Ord. 11-9; Ord. 09-10)

Chapter 20.04. Administrative Code Enforcement Hearing Procedures.

Sections:

20.04.01. Declaration of Purpose.
20.04.02. Authority and Scope of Hearings.
20.04.03. Powers of the Administrative Law Judge.
20.04.04. Request for Administrative Code Enforcement Hearing.
20.04.05. Notification of Administrative Code Enforcement Hearing.
20.04.06. Default Hearings and Orders.
20.04.07. Procedures at Administrative Code Enforcement Hearing.
20.04.08. Failure to Attend Administrative Code Enforcement Hearing.
20.04.09. Administrative ~~Code Enforcement~~Law Judge Order.
20.04.10. Failure to Comply with Order.
20.04.11. Administrative Enforcement Appeals.
~~**20.04.12. Disqualification of Code Enforcement Hearing Officer.**~~

20.04.01. Declaration of Purpose.

The City Council finds that there is a need to establish uniform procedures for administrative code enforcement hearings conducted pursuant to ~~the City Code~~this Title. It is the purpose and intent of the City Council to afford due process of law to any person who is directly affected by an administrative action. Due process of law includes notice, an opportunity to participate in the administrative hearing including the opportunity to call witnesses, present evidence, and cross-examine witnesses, and an explanation of the reasons justifying the administrative action. These procedures are also intended to establish a forum to efficiently, expeditiously, and fairly resolve issues raised in any administrative code enforcement action.

(Ord. 11-9; Ord. 09-10)

20.04.02. ~~Authority and Scope~~Policies and Procedures of Hearings.

~~Enforcement of City Code violations may be conducted through the Administrative Code Enforcement Program, presided over by the Administrative Law Judge.~~ The Administrative Law Judge ~~shall~~may develop policies and procedures to regulate the hearing process for any violation of the City Code that ~~are~~is handled pursuant to the administrative abatement procedures, the emergency abatement procedures, the demolition procedures, or the administrative citation procedures. Such policies and procedures shall be consistent with this Title 20 and other City ordinances and codes.

(Ord. 11-9; Ord. 09-10)

20.04.03. Powers of the Administrative Law Judge.

1. The Administrative Law Judge has the authority to hold hearings, determine if violations of city ordinances exist, order compliance with city ordinances, and enforce compliance

as provided in this Title on any matter subject to the provisions of the Title.

2. The Administrative Law Judge may continue a hearing based on good cause—as defined in this Chapter—shown by one of the parties to the hearing. The Administrative Law Judge must enter on the record the good causereason foron grantingwhich a continuance is granted.

3. The Administrative Law Judge, at the request of any party to the hearing, may sign may issue subpoenas for witnesses, documents, and other evidence where the attendance of the witness for the admission of evidencesuch is deemed necessary to decide the issues at the hearing. All costs related to the subpoena, including witness and mileage fees, shall be borne by the party requesting the subpoena. The Administrative Law Judge shall develop policies and procedures relating to the issuance of subpoenas in administrative code enforcement hearings, including the form of the subpoena and related costs. In the absence of any adopted policies, the Administrative Law Judge shall follow the Utah Rules of Civil Procedure.

4. The Administrative Law Judge has continuing jurisdiction over the subject matter of an administrative code enforcement hearing for the following purposes:

   a. of granting a continuance,;;
   b. ordering compliance by issuing an administrative code enforcement orderAdministrative Law Judge Order using any remedies available under the law,;; and
   c. ensuring compliance of that order, which includes the following powers:
      i. to authorize the City to enter and abate a violation,
      ii. to modify an administrative code enforcement orderAdministrative Law Judge Order, or,
      4.iii. to grant a new hearing where extraordinary circumstances exist.,to grant a new hearing.

5. The Administrative Law Judge has the authority to require a the responsible person to post a code enforcement performance bond to ensure compliance with an administrative code enforcement orderAdministrative Law Judge Order.

6. The Administrative Law Judge is subject to disqualification for bias, prejudice, interest, or any other reason for which a judge may be disqualified in a court of law. Rules and procedures for disqualification and replacement shall be in accordance with the Utah Rules of Civil Procedure.

(Ord. 11-9; Ord. 09-10)

20.04.04. Request for Administrative Code Enforcement Hearing.

1. A person served with one of the following documents or notices has the right to request an administrative code enforcement hearing, if the request is filed within ten calendar

days from the date of service~~ of one of the following notices~~:

a. notice of violation;
b. notice of itemized bill for costs;
c. administrative citation; or
d. notice of emergency abatement.

2. The request for hearing shall be made in writing and filed with the Code Enforcement Coordinator, who then shall provide a copy of the request to the Administrative Law Judge and serve the request to all parties. The request shall contain the case number, the address of the violation, ~~and~~ the signature of the responsible party, and the reason for the hearing including justifications for the offense, defenses, and requests for waiver or reduction in fines.

3. As soon as practicable after receiving the written notice of the request for hearing, the ~~Administrative Law Judge~~Code Enforcement Coordinator shall schedule a date, time, and place for the hearing.

4. Failure to request a hearing as provided shall constitute a waiver of the right to a hearing and a waiver of the right to challenge the action.

(Ord. 11-9; Ord. 09-10)

20.04.05. Notification of Administrative Code Enforcement Hearing.

1. Written notice of the date~~y~~, time, and place of the hearing shall be served by the Code Enforcement Coordinator or Code Enforcement Officer to ~~a~~ the responsible person as soon as practicable prior to the date of the hearing.

2. The format and contents of the hearing notice shall be in accordance with rules and policies promulgated by the Administrative Law Judge. In the absence of such rules, the format and contents of the hearing shall be drafted by the Code Enforcement Coordinator so as to be consistent with this Title 20.

3. The notice of hearing shall be served by any of the methods of service listed in Section 20.01.09 of this Title.

(Ord. 11-9; Ord. 09-10)

20.04.06. Default Hearings and Orders.

1. If the responsible person fails to request an administrative code enforcement hearing before the expiration of the ten day deadline, the case shall be set for a default hearing by the Code Enforcement Coordinator. ~~The Administrative Law Judge shall schedule a default hearing.~~ The Code Enforcement Coordinator shall notify the responsible person ~~shall be notified~~ of the date, time, and place of the hearing by one of the methods listed in Section 20.01.09.

2. A default hearing shall also be scheduled for all cases that have outstanding or unpaid civil penalties, fines, fees, or costs due to the City before collection, if a hearing on that case has not already been held.

3. At the default hearing, the responsible person shall have the opportunity to present evidence to show that good cause exists, as defined in the Title, to do one or more of the following:
    a. waive or reduce the fines which have accumulated;
    b. postpone an abatement action by the City; or
    c. excuse the responsible person's failure to request a hearing within the ten day period.

~~4. If the responsible person fails to establish good cause to take one or more of the actions set forth in subparagraph 3, the Administrative Law Judge shall review the notice of violation and any other relevant information. included in the case file. The Administrative Law Judge shall not accept any other evidence.~~

~~5.~~4. If the evidence shows that the violations existed, the Administrative Law Judge shall enter an order requiring abatement of the violations and the payment of all fines, costs, and fees. Fines and costs shall run until the City issues a notice of compliance stating when the violations were actually abated. The order by the Administrative Law Judge shall not suspend further accrual of fines and costs.

(Ord. 11-9; Ord. 09-10)

20.04.07. Procedures at Administrative Code Enforcement Hearing.

1. Administrative code enforcement hearings are intended to be informal in nature. Formal rules of evidence and discovery do not apply; however, an informal exchange of discovery may be required. The request for discovery must be in writing and filed at least 10 business days before the hearing. Failure to request discovery shall not be a basis for a continuance.

2. Complainant information is protected and shall not be released unless the complainant is a witness at the hearing.

3. The procedure and format of the administrative hearing shall follow the procedures promulgated by the Administrative Law Judge.

4. The City bears the burden of proof at an administrative code enforcement hearing to establish the existence of a violation of the City Code or ~~applicable state codes~~City ordinances.

5. The standard of proof to be used by the Administrative Law Judge in deciding the issues at an administrative hearing is whether there is substantial evidence in the record~~a the preponderance of the evidence shows~~ that the violations exist and that the person before the Judge is the responsible person.

6. Hearsay evidence, as defined by the Utah Rules of Evidence, is admissible so long as such hearsay evidence is not the only evidence relied upon by the Administrative Law Judge.

~~6.~~7. Each party shall have the opportunity to cross-examine witnesses that are in attendance and present evidence in support of his or her case. A written declaration signed under penalty of perjury may be accepted in lieu of a personal appearance so long as the declaration is not the only evidence relied upon by the Administrative Law Judge. Testimony may be given by telephone or other electronic means so long as the testimony by telephone or electronic means is not the only evidence relied upon by the Administrative Law Judge.

8. All hearings are open to the public. They shall be recorded by audio recording.

~~7.~~9. Hearings may be held at the location of the violation if the Administrative Law Judge so chooses and means are provided for an audio recording of the proceeding.

~~8.~~10. The responsible person has a right to be represented by an attorney. ~~If an attorney will be representing the responsible person at the hearing, notice of the attorney's name, address, and telephone number must be given to the City at least one day prior to the hearing. If notice is not given, the hearing may be continued at the City's request, and all costs of the continuance assessed to the responsible person.~~

~~9.~~11. No new hearing shall be granted, unless the Administrative Law Judge determines that extraordinary circumstances exist which justify a new hearing.

(Ord. 11-9; Ord. 09-10)

20.04.08. Failure to Attend Administrative Code Enforcement Hearing.

Any party whose property or actions are the subject of any administrative code enforcement hearing and who fails to appear at the hearing is deemed to have waived the right to a hearing, which~~and~~ will result in a default judgment for the City~~,~~ provided that proper notice of the hearing has been provided. The City shall not be required to put on evidence or prove that a violation was committed by the Responsible Person in such an event, and an entry of a default judgment shall have the same effect as if there was a judgment on the merits of the case.

(Ord. 11-9; Ord. 09-10)

20.04.09. Administrative ~~Code Enforcement~~Law Judge Order.

1. The parties may enter into a stipulated agreement, which must be signed by both parties or verbally stipulated on the record during the administrative code enforcement hearing. This agreement or stipulation shall be entered as the ~~administrative code enforcement order~~Administrative Law Judge Order. Entry of this agreement or stipulation shall constitute a waiver of the right to a hearing and the right to appeal.

2. Once all evidence and testimony are completed, the Administrative Law Judge shall issue an ~~administrative code enforcement order~~Administrative Law Judge Order that affirms, modifies, or rejects the notice, ~~or~~ citation, or action by the Code Enforcement Officer. The Administrative Law Judge may increase or decrease the total amount of civil penalties and costs that are due pursuant to the City's fee schedule and the procedures in this Title.

3. The Administrative Law Judge may order the City to enter the property and abate all violations, which may include removing animals kept in violation of the City Code.

4. The Administrative Law Judge may revoke a kennel permit, an animal license, or the right to possess animals as provided in the City Code.

5. As part of the ~~administrative code enforcement order~~Administrative Law Judge Order, the Administrative Law Judge may ~~condition the total or partial assessment of~~reduce or stay civil penalties on the condition that the responsible person ~~'s ability to~~ complete compliance by specified deadlines.

6. The Administrative Law Judge may schedule subsequent review hearings as may be necessary or as requested by a party to the hearing to ensure compliance with the ~~administrative code enforcement order~~Administrative Law Judge Order.

7. The Administrative Law Judge may order the responsible person to post a performance bond to ensure compliance with the order.

8. The ~~administrative code enforcement order~~Administrative Law Judge Order shall become final on the date of the signing of the order.

9. The ~~administrative code enforcement order~~Administrative Law Judge Order shall be served on all parties by any one of the methods listed in Section 20.01.09 of this Title. (Ord. 11-9; Ord. 09-10)

20.04.10. Failure to Comply with Order.

~~Upon the failure of the responsible person to comply with the terms and deadlines set forth in the administrative code enforcement order, the City may use all appropriate legal means to recover the civil penalties and administrative costs to obtain complian~~

1. After the Administrative Law Judge issues an ~~administrative code enforcement order~~Administrative Law Judge Order, the Code Enforcement Officer and Administrative Law Judge ~~shall~~may monitor the violations and determine compliance.

~~1.~~2. Upon the failure of the responsible person to comply with the terms and deadlines set forth in the ~~administrative code enforcement order~~Administrative Law Judge Order, the City may use all appropriate legal means to recover the civil penalties and administrative costs to obtain compliance.

(Ord. 11-9; Ord. 09-10)

20.04.11. Administrative Enforcement Appeals.

1. ~~Appeal of Administrative Code Enforcement Hearing Decision.~~ Any person adversely affected by any decision made in the exercise of the provisions of this Chapter may file a petition for review of the decision or order ~~by~~to ~~the~~ district court within thirty days after the decision is rendered.

2. No person may challenge in district court ~~an administrative code enforcement hearing officer's~~the Administrative Law Judge's decision until that person has exhausted his or her administrative remedies herein.

3. Unless otherwise provided by the Utah Rules of Civil Procedure or local court rules, ~~W~~within 120 days after submitting the petition, the party petitioning for appeal shall request a copy of the record of the proceedings, including transcripts of hearings when necessary. The ~~Administrative Law Division~~Code Enforcement Coordinator shall not submit copies of files or transcripts to the reviewing court until the party petitioning for appeal has paid all required costs. The petitioning party's failure to properly arrange for copies of the record, or to pay the full costs for the record, within 180 days after the petition for review was filed shall be grounds for dismissal of the petition, unless otherwise provided by the Utah Rules of Civil Procedure or local court rules.

4. If a transcript of a hearing cannot be prepared because the tape recording is incomplete or unintelligible, the district court may, in its discretion, remand the matter to the Administrative Law Judge for a supplemental proceeding to complete the record. The district court may limit the scope of the supplemental proceeding to issues that, in the court's opinion, need clarification.

5. The district court's review is limited to the record of the administrative decision that is being appealed. The court shall not accept nor consider any evidence that is not part of the record of that decision.

6. The courts shall:
   a. presume that the ~~administrative code enforcement hearing officer's~~Administrative Law Judge's decision and orders are valid; and
   b. review the record to determine whether or not the decision was arbitrary, capricious, or illegal.

(Ord. 11-9; Ord. No. 09-10)

~~**20.04.12. Disqualification of Code Enforcement Hearing Officer.**~~

~~The Administrative Law Judge is subject to disqualification for bias, prejudice, interest, or any other reason for which a judge may be disqualified in a court of law. Rules and procedures for disqualification and replacement shall be in accordance with the Utah Rules of Civil Procedure. (Ord. 11-9; Ord. 09-10)~~

20.04.12. Revocation of Animal Licenses.

The Administrative Law Judge may revoke animal licenses, revoke the rights of a Responsible Person to legally own an animal inside City boundaries, and/or order the removal of an animal(s) if the responsible person receives three or more animal violations within any one 12-month period. In such a case, a Revocation Hearing shall be set and a notice of the hearing served by any of the methods in 20.01.09. During the Revocation Hearing, the Administrative Law Judge shall determine if there is substantial evidence in the record to show that three or more animal violations within any one 12-month period have occurred.

Chapter 20.05. Administrative and Judicial Remedies.

Sections:

20.05.01. Recordation of Notices of Violation and Administrative Law Judge Orders.
~~**20.05.02. Administrative Civil Penalties.**~~
20.05.02~~03~~. Abatement of Violation.
20.05.03~~04~~. Recovery of Costs.
20.05.04~~05~~. Administrative Fees.
20.05.05~~06~~. Injunctions.
20.05.06~~07~~. Performance Bonds.
20.05.07~~08~~. Code Enforcement Tax Liens.
20.05.08~~09~~. Recovery of Costs by Writ of Execution.
20.05.09~~10~~. Recovery of Costs by Writ of Garnishment.
~~**20.05.11. Allocation of Funds Collected Under Administrative Code Enforcement Hearing Program Abatement Superfund.20.05.12. Code Enforcement Administrative Fees and Cost Fund.**~~
~~**20.05.13. Allocation of Civil Penalties.**~~

20.05.01. Recordation of Notices of Violation and Administrative Law Judge Orders.

1. **Declaration of Purpose.**
   a. The City Council finds that there is a need for alternative methods of enforcement for violations of the City Code and ~~applicable state codes~~City ordinances that are found to exist on real property. The City Council further finds that an appropriate method of enforcement for these types of violations is the issuance and recordation of notices of violation and Administrative Law Judge Orders.
   b. The procedures established in this shall be in addition to criminal, civil, or any other remedy established by law that may be pursued to address the violation of the City Code or ~~applicable state codes~~City ordinances.

2. **Authority.** Whenever ~~the Ordinance Enforcement Administrator~~a Code Enforcement Officer or Code Enforcement Coordinator determines that a property or violation has not been brought into compliance as required in this Title, the Code Enforcement Coordinator~~Ordinance Enforcement Administrator~~ has the authority to record the notice of violation or ~~administrative code enforcement order~~Administrative Law Judge Order with the Recorder's Office of Utah County.

3. **Procedures for Recordation.**
   a. If a Code Enforcement Officer issues ~~Once the Ordinance Enforcement Administrator has issued~~ a notice of violation or administrative citation to a responsible person, and the property remains in violation after the deadline established in the notice of violation~~,~~ or is not corrected after the administrative citation is issued, and no request for an administrative hearing has been filed, the ~~Ordinance Enforcement Administrator~~Code Enforcement Coordinator shall record a notice of violation with the Recorder's Office of Utah County.

b. If an administrative hearing is held, and an order is issued in the City's favor, the Code Enforcement Coordinator~~Ordinance Enforcement Administrator~~ shall record the Administrative Law Judge's ~~administrative code enforcement order~~Administrative Law Judge Order with the Recorder's Office of Utah County.
c. The recordation shall include the name of the property owner, the parcel number, the legal description of the parcel, ~~and~~ a copy of the notice of violation, administrative citation, or order, and any other relevant information.
d. The recordation does not encumber the property, but merely places future interested parties on notice of any continuing violation found upon the property.

4. **Service of Notice of Recordation.** A notice of the recordation shall be served on the responsible person and the property owner pursuant to any of the methods of service set forth in Section 20.01.09 of this Title.

5. **Failure to Request.** The failure of any person to file a request for an administrative code enforcement hearing when served with a notice of violation shall constitute a waiver of the right to an administrative hearing and shall not affect the validity of the recorded notice of violation.

6. **Notice of Compliance—Procedures.**
   a. When the violations have been corrected, the responsible person or property owner may request an inspection of the property from ~~the Ordinance Enforcement Administrator~~a Code Enforcement Officer.
   b. Upon receipt of a request for inspection, the Code Enforcement Officer~~the Ordinance Enforcement Administrator~~ shall reinspect the property as soon as practicable to determine whether the violations listed in the notice of violation, administrative citation, or the order have been corrected, ~~and~~ whether all necessary permits have been issued, and/or whether final inspections have been performed.
   c. The ~~Ordinance Enforcement Administrator~~Code Enforcement Officer, in conjunction with the Code Enforcement Coordinator, shall serve a notice of compliance~~satisfaction~~ to the responsible person or property owner in the manner provided in Section 20.01.09 of this Title~~,~~ if the ~~Ordinance Enforcement Administrator~~Code Enforcement Officer determines that:
      i. all violations listed in the recorded notice of violation or order have been corrected;
      ii. all necessary permits have been issued and finalized;
      iii. all civil penalties, fines, and costs assessed against the property have been paid or satisfied; and/or
      iv. the party requesting the notice of compliance~~satisfaction~~ has paid all administrative fees and costs.
   d. If ~~the Ordinance Enforcement Administrator denies~~ a request to issue a notice of compliance is denied, then~~satisfaction,~~, upon request, the Code Enforcement Officer, in conjunction with the Code Enforcement Coordinator,~~Ordinance Enforcement Administrator~~ shall serve the responsible person with a written explanation setting forth the reasons for the Code Enforcement Officer's denial. The written explanation shall be served by any of the methods of service listed in

Section 20.01.09 of this Title.

7. **~~Prohibition Against~~Withholding the Issuance of Municipal Permits and Business Licenses.**
   a. The City may withhold permits and business licenses until a notice of compliance has been issued by a Code Enforcement Officer.
   ~~a.~~b. The City may withhold business licenses~~;~~, permits for kennels~~;~~, ~~or~~ permits for any alteration, repair, or construction pertaining to any existing or new structures or signs on the property, ~~or~~and any permits pertaining to the use and development of the real property or the structure.
   ~~b. The City may withhold permits until a notice of satisfaction has been issued by the Ordinance Enforcement Administrator.~~
   c. The City may, in its sole discretion, issue ~~not withhold~~ permits or business licenses that are necessary to obtain a notice of compliance~~satisfaction~~ or that are necessary to correct serious health and safety violations.

8. **Cancellation of Recorded Notice of Violation or Administrative Law Judge Order.** In conjunction with the Code Enforcement Officers, the Code Enforcement Coordinator ~~The Ordinance Enforcement Administrator or responsible person~~ shall record the notice of compliance~~satisfaction~~ with the County Recorder's Office. Recordation of the notice of compliance~~satisfaction~~ shall have the effect of canceling the recorded notice of violation, administrative citation, or recorded Administrative Law Judge Order but shall not cancel any outstanding fines, fees, or costs.

(Ord. 11-9; Ord. No. 09-10)

~~20.05.02. Administrative Civil Penalties.~~

~~2. **Authority.**~~
   ~~a. Any person violating any provision of the City Code or applicable state codes may be subject to the assessment of civil penalties for each violation.~~
   ~~b. Each and every day a violation of any provision of the City Code or applicable state codes exists is a separate violation subject to the assessment of civil penalties.~~
   ~~c. Civil penalties cannot be assessed when a criminal case has been filed for the same date and violation, because fines will be assessed with the criminal case.~~
   ~~d. Interest shall be assessed per City policy on all outstanding civil penalties balances until the case has been paid in full.~~
   ~~e. Civil penalties for violations of any provision of the City Code or applicable state codes shall be assessed pursuant to Title 1, Chapter 2, of the Consolidated Fee Schedule.~~

~~3. **Civil Penalties.**~~
   ~~a. If a responsible person fails to bring a violation into compliance within ten days of service of the notice of violation, civil penalties shall be owed to the City for each and every subsequent day of violation.~~

~~b. Civil penalties are assessed and owing immediately for any violation of the City Code or applicable state codes for an administrative citation.~~

~~4. **Determination of Civil Penalties.**~~

~~a. Civil penalties shall be assessed per violation per day pursuant to the City fee schedule for a notice of violation.~~

~~b. Civil penalties shall continue to accrue until the violation(s) has/have been brought into compliance with the City Code or applicable state codes.~~

~~5. **Modification of Civil Penalties.**~~

~~a. Upon completion of the notice of violation or administrative enforcement order, the administrative code enforcement hearing officer~~Administrative Law Judge ~~may modify the civil penalties on a finding of good cause.~~

~~b. Civil penalties may be waived or modified by the hearing officer~~Administrative ~~Law Judge upon if there is a finding of good cause based on the responsible person's claim of nonconforming use or conditional use and:~~

~~c. the City's need to verify the claim; or~~

~~d. the responsible person's filing of an application for either use before expiration of the date to correct.~~

~~**Failure to Pay Penalties.** The failure of any person to pay civil penalties assessed within the specified time may result in the Ordinance Enforcement Administrator's~~City ~~pursuing any legal remedy to collect the civil penalties as provided in the law.~~

~~(Ord. 11-9; Ord. 09-10)~~

20.05.~~03~~02. Abatement of Violation.

1. **Authority to Abate.**
   a. ~~The~~A ~~Ordinance Enforcement Administrator is~~Code Enforcement Officer is authorized to enter upon any property or premises to abate the violation of the City Code and ~~applicable state codes~~City ordinances.
   b. A~~The~~ ~~Ordinance Enforcement Administrator is~~ Code Enforcement Officer is authorized to assess all costs for the abatement to the responsible person and use any remedy available under the law to collect the costs.
   c. If additional abatement~~s~~ ~~are~~is necessary within two years, treble costs may be assessed against the responsible person(s) for the actual abatement.

2. **Procedures for Abatement.**
   a. Once the procedures set forth in this Title have been ~~completed~~complied with, the violation may be abated by City personnel or by a private contractor acting under the direction of the City.
   b. These City personnel or ~~a~~ private contractors may enter upon private property in a reasonable manner to abate the ordinance violation as specified in the notice of violation or ~~administrative code enforcement order~~Administrative Law Judge Order.

c. If the responsible person abates the violation before the City performs the actual abatement pursuant to a notice of violation, administrative citation, or ~~administrative code enforcement order~~Administrative Law Judge Order, a ~~the~~ Code Enforcement Officer~~Ordinance Enforcement Administrator~~ may still assess all costs incurred by the City against the responsible person.

d. When the abatement is completed, a report describing the work performed and an itemized account of the total abatement costs shall be prepared by the Code Enforcement Officer overseeing the abatement~~Ordinance Enforcement Administrator~~. The report shall contain the names and addresses of the responsible persons of each parcel~~,~~ and the tax parcel numbers.

e. The Code Enforcement Coordinator~~Ordinance Enforcement Administrator~~ shall serve the notice of costs and the itemized bill of costs ~~by registered mail to the last known address of the responsible person(s)~~through any of the means in Section 20.01.09. The notice shall demand full payment within twenty days to the City Treasurer.

~~f. If requested in writing by any or all responsible persons, the Code Enforcement Coordinator~~~~The Ordinance Enforcement Administrator shall schedule an itemized bill for costs~~ of the ~~hearing.~~, ~~if requested in writing by any or all responsible persons.~~

(Ord. 11-9; Ord. 09-10)

20.05.~~04~~03. Recovery of Costs.

1. **Declaration of Purpose.**

a. The City Council finds that there is a need to recover costs incurred by Code Enforcement Officers~~enforcement officials~~ and other City personnel who spend considerable time inspecting and reinspecting properties throughout the City in an effort to ensure compliance with the City Code or ~~applicable state codes~~City ordinances.

b. The City Council further finds that the assessment of costs is an appropriate method to recover expenses incurred for actual costs of abating violations, reinspection fees, filing fees, attorney fees, hearing officer fees, title search, and any additional actual costs incurred by the City for each individual case.

c. The assessment and collection of costs shall not preclude the imposition of any administrative or judicial civil penalties or fines for violations of the City Code or ~~applicable state codes~~City ordinances.

2. **Authority.**

a. Whenever actual costs are incurred by the City on a property to obtain compliance with provisions of the City Code and ~~applicable state codes~~City ordinances, a Code Enforcement Officer or Code Enforcement Coordinator ~~the Ordinance Enforcement Administrator~~ may assess costs against the responsible person.

b. Once a notice of violation has been issued, the property shall~~will~~ be inspected one time if the responsible person requests an inspection in writing. Any additional inspections shall be subject to reinspection fees pursuant to the City fee schedule.

3. **Notification of Assessment of Reinspection Fees.**
    a. Notification of reinspection fees ~~shall~~may be provided ~~on~~in the notice of violation served to the responsible person~~(s)~~.
    b. Reinspection fees assessed or collected pursuant to this ~~Part~~ Section shall not be included in any other costs assessed.
    c. The failure of any responsible person to receive notice of the reinspection fees shall not affect the validity of any other fees imposed under this ~~Part~~Section.

4. **Failure to Timely Pay Costs.** The failure of any person to pay assessed costs by the deadline specified in the invoice shall result in a late fee pursuant to City ~~policy~~ordinances.

(Ord. 11-9; Ord. No. 09-10)

20.05.05. Administrative Fees.

The Code Enforcement Officers and Code Enforcement Coordinator are~~Ordinance Enforcement Administrator or code enforcement hearing officer is~~ authorized to assess administrative fees for costs incurred in the administration of the~~is~~ code enforcement program, such as investigation of violations, preparation for hearings, hearings, and the collection process. The fee assessed shall be the amount set forth in this Title or in the City fee schedule.

(Ord. 11-9; Ord. No. 09-10)

20.05.06. Injunctions.

In addition to any other remedy provided under the City Code or state codes, including criminal prosecution or administrative remedies, any provision of the City Code may be enforced by injunction issued in the Fourth District Court upon a suit brought by the City.

(Ord. 11-9; Ord. No. 09-10)

20.05.07. Performance Bonds.

1. As part of any notice, order, or action, the Administrative Law Judge~~Code Enforcement hearing officer~~ has the authority to require any responsible person~~s~~ to post a performance bond to ensure compliance with the City Code, ~~applicable state codes~~City ordinances, or any judicial action.

2. If the responsible person fails to comply with the notice, order, or action, the bond will be forfeited to the City. ~~The bond will not be used to offset the other outstanding costs and fees associated with the case.~~

(Ord. 11-9; Ord. 09-10)

20.05.08. Code Enforcement Tax Liens.

1. **Declaration of Purpose.** The City Council finds that recordation of code enforcement tax liens will assist in the collection of civil penalties, administrative costs, and administrative fees assessed by the administrative code enforcement hearing program or judicial orders and lessen the cost to City taxpayers of code enforcement. The City Council further finds that collection of civil penalties, costs, and fees assessed for code enforcement violations is important in deterring future violations and maintaining the integrity of the City's code enforcement system. The procedures established in this ~~Part~~Section shall be used to complement existing administrative or judicial remedies that may be pursued to address violations of the City Code or ~~applicable state codes~~City ordinances.

2. **Tax Liens for Abatement Costs~~Procedures for Tax Liens Without a Judgment~~.**
   a. Once the City has abated a property for weeds, garbage, refuse, or unsightly or deleterious objects or structures, the Code Enforcement Coordinator ~~Ordinance Enforcement Administrator~~ shall prepare three copies of the Itemized Statement of Costs incurred in the removal and destruction of the violations and deliver them to the City Treasurer within ten days after completion of the work of removing the violations.
   b. The Code Enforcement Coordinator ~~Ordinance Enforcement Administrator~~ shall ~~send, by registered mail to the property owner's last known address,~~serve the Responsible Person by any of the methods in Section 20.01.09 a copy of the Itemized Statement of Costs informing him or her that a code enforcement tax lien is being recorded for the amount of actual costs of abatement. Payment shall be due within twenty calendar days from the date of mailing.
   c. Upon receipt of the Itemized Statement of costs, the City Treasurer shall record a Code Enforcement Tax Lien against the property with the county treasurer's office.
   d. The failure of any person with a financial interest in the property to actually receive the notice of the lien shall not affect the validity of the lien or any proceedings taken to collect the outstanding costs of abatement.

3. ~~**Procedures for**~~ **Tax Liens ~~With a~~ for Judgments.** Once a judgment has been obtained from the appropriate court ~~assessing~~ imposing costs, fines, or fees against the responsible person~~(s)~~, the Code Enforcement Coordinator ~~Ordinance Enforcement Administrator~~ may record a code enforcement tax lien against any real property owned by the responsible person~~(s)~~.

4. **Cancellation of Code Enforcement Tax Lien.**
   a. Once payment in full is received for the outstanding civil penalties and costs, or the amount is deemed satisfied pursuant to a subsequent administrative or judicial order, the Code Enforcement Coordinator ~~Ordinance Enforcement Administrator~~ shall either record a notice of satisfaction of judgment, or provide the property owner or financial institution, through any of the means of service in Section 20.01.09, with the notice of satisfaction of judgment so that it can record this

notice with the county recorder's office.

b. The notice of satisfaction of judgment shall include the same information as provided for in the original code enforcement tax lien.

c. Such notice of satisfaction of judgment shall cancel the code enforcement tax lien.

(Ord. 11-9; Ord. 09-10)

20.05.09. Recovery of Costs by Writ of Execution.

After obtaining a judgment, the ~~Ordinance Enforcement Administrator~~City may collect the obligation by use of all appropriate legal means. This may include the execution on personal property owned by the responsible person by filing a writ with the applicable court.

(Ord. 11-9; Ord. 09-10)

20.05.10. Recovery of Costs by Writ of Garnishment.

After obtaining a judgment, the ~~Ordinance Enforcement Administrator~~City may collect the obligation by use of all appropriate legal means. This may include the garnishment of paychecks, financial accounts, and other income or financial assets by filing a writ with the applicable court.

(Ord. 11-9; Ord. 09-10)

~~**20.05.11. Allocation of Funds Collected Under Administrative Code Enforcement Hearing Program Abatement Superfund.**~~

~~1. **Establishment of Abatement Superfund.**~~

~~a. There is hereby established a revolving fund to be known as the "Abatement Superfund" to defray costs of administrative and judicial abatements.~~

~~b. The fund shall be reimbursed by collection from the property or property owner as specified in this Title and by the courts.~~

~~c. The Ordinance Enforcement Administrator shall establish accounting procedures to ensure proper account identification, credit, and collection.~~

~~d. This fund may be operated and used in conjunction with procedures ordered or authorized under the abatement provision of this Title.~~

~~2. **Repayment to Abatement Superfund.** All monies recovered from the sale or transfer of property or by payment for the actual abatement costs shall be paid to the City Treasurer, who shall credit the appropriate amount to the Abatement Superfund.~~

~~(Ord. 11-9; Ord. No. 09-10)~~

~~**20.05.12. Code Enforcement Administrative Fees and Cost Fund.**~~

~~Administrative fees and administrative costs, except for actual abatement costs, collected pursuant to this Title shall be deposited in the Code Enforcement Administrative Fees and Costs~~

~~Fund, as established by the Ordinance Enforcement Administrator for the enhancement of the City's code enforcement efforts and to reimburse City departments for investigative costs and costs associated with the hearing process. Fees and costs deposited in this fund shall be appropriated and allocated in a manner determined by the Ordinance Enforcement Administrator. The City auditor shall establish accounting procedures to ensure proper account identification, credit, and collection.~~

~~(Ord. 11-9; Ord. No. 09-10)~~

~~20.05.13. Allocation of Civil Penalties.~~

~~Civil penalties collected pursuant to this Part shall be deposited in the General Fund of the City. Civil penalties deposited in this fund shall be appropriated and allocated in a manner determined by the City. The City shall establish accounting procedures to ensure proper account identification, credit, and collection.~~

~~(Ord. 11-9; Ord. No. 09-10)~~

ORDINANCE NO. 14 - (6-17-14)

AN ORDINANCE OF THE CITY OF SARATOGA SPRINGS, UTAH, AMENDING TITLE 20 OF THE CITY CODE PERTAINING TO ADMINISTRATIVE CODE ENFORCEMENT OF CITY CODE VIOLATIONS; AND ESTABLISHING AN EFFECTIVE DATE

WHEREAS, pursuant to authority granted in Utah Code Annotated § 10-3-701 *et seq*., the City Council for the City of Saratoga Springs may adopt and amend laws, ordinances, regulations, and codes that comprise the regulatory, penal ordinances, and administrative ordinances of the City of Saratoga Springs; and

WHEREAS, the City Council wishes to amend the rules, regulations, and procedures with respect to administrative enforcement of City Code violations; and

WHEREAS, the City Council has determined that it is in the best interest of the public health, safety, and welfare that the attached amendments to the City Code be adopted.

NOW THEREFORE, the City Council of the City of Saratoga Springs, Utah does hereby ordain as follows:

SECTION I – ENACTMENT

The amendments to Title 20 of the City Code attached as Exhibit A, incorporated herein by this reference, are hereby enacted.

SECTION II – AMENDMENT OF CONFLICTING ORDINANCES

If any ordinances, resolutions, policies, or zoning maps of the City of Saratoga Springs heretofore adopted are inconsistent herewith they are hereby amended to comply with the provisions hereof. If they cannot be amended to comply with the provisions hereof, they are hereby repealed.

SECTION III – EFFECTIVE DATE

This ordinance shall take effect upon its passage by a majority vote of the Saratoga Springs City Council and following notice and publication as required by the Utah Code.

SECTION IV – SEVERABILITY

If any section, subsection, sentence, clause, phrase, or portion of this ordinance is, for any reason, held invalid or unconstitutional by any court of competent jurisdiction, such provision shall be deemed a separate, distinct, and independent provision, and such holding shall not affect the validity of the remaining portions of this ordinance.

SECTION V – PUBLIC NOTICE

The Saratoga Springs Recorder is hereby ordered, in accordance with the requirements of Utah Code §§ 10-3-710—711, to do as follows:

a. deposit a copy of this ordinance in the office of the City Recorder; and
b. publish notice as follows:
   i. publish a short summary of this ordinance for at least one publication in a newspaper of general circulation in the City; or
   ii. post a complete copy of this ordinance in three public places within the City.

ADOPTED AND PASSED by the City Council of the City of Saratoga Springs, Utah, this __ day of _____, 2014.

Signed: _____
Jim Miller, Mayor

Attest: _____ _____
Lori Yates, City Recorder Date

VOTE

Shellie Baertsch _____
Rebecca Call _____
Michael McOmber _____
Bud Poduska _____
Stephen Willden _____

EXHIBIT B
Compare Version Showing Changes Made During June 5, 2014 Meeting

Title 20. ADMINISTRATIVE CODE ENFORCEMENT

Chapters:

20.01. General Provisions and Definitions.
20.02. General Authority and Offenses.
20.03. Administrative Code Enforcement Procedures.
20.04. Administrative Code Enforcement Hearing Procedures.
20.05. Administrative and Judicial Remedies.

Chapter 20.01. General Provisions and Definitions.

Sections:

20.01.01. Short Title.
20.01.02. Declaration of Purpose.
20.01.03. Scope.
20.01.04. Existing Law Continued.
20.01.05. Criminal Prosecution Right.
20.01.06. No Mandatory Duty—Civil Liability.
20.01.07. Definitions.
20.01.08. Acts Include Causing, Aiding, or Abetting.
20.01.09. Service of Process.
20.01.10. Constructive Notice of Recorded Documents.

20.01.01. Short Title.

This Title shall be known as "Administrative Code Enforcement." This Title shall also be known as Title 20 of the City of Saratoga Springs City Code. It may be cited and pleaded under either designation.

(Ord. 11-9; Ord. 09-10)

20.01.02. Declaration of Purpose.

The City Council of the City of Saratoga Springs finds that the enforcement of the Saratoga Springs City Code throughout the City is an important public service. Code enforcement is vital to the protection of the public's health, safety, welfare, and quality of life. A comprehensive code enforcement system that uses a combination of judicial and administrative remedies is critical to gaining compliance with City ordinances.

(Ord. 11-9; Ord. 09-10)

20.01.03. Scope.

The provisions of this Title may be applied to all violations of the City Code. It has been designed as an additional remedy for the City to use in achieving compliance with its ordinances and regulations.

(Ord. 11-9; Ord. No. 09-10)

20.01.04. Existing Law Continued.

The provisions of this Title do not invalidate any other title or ordinance, but shall be read in conjunction with those titles and ordinances as an additional remedy available for enforcement of

those ordinances.
(Ord. 11-9; Ord. 09-10)

20.01.05. Criminal Prosecution Right.

The City has sole discretion in deciding whether to file a civil or criminal case for the violation of any of its ordinances. The enactment of this administrative remedy shall in no way interfere with the City's right to prosecute City ordinance violations as criminal offenses. The City may use any of the remedies available under the law in both civil and criminal prosecution. Although most minor City Code violations should be enforced through this Title, the City may choose to file a criminal prosecution under any of the following circumstances:

1. the violator has one prior violation of the City Code within the last year;

2. the violation caused bodily injury, substantial bodily injury, or serious bodily injury to an individual, all of which shall have the same definition in Utah Code § 76-1-601;

3. the violator, in a single criminal episode, violated one or more provisions of the Utah Criminal Code as well as one or more provisions of the City Code, and all violations are being charged as a single criminal episode as defined in Utah Code § 76-1-401;

4. the violator is being charged with any violation of Title 10 of the City Code; or

5. the violation caused a significant health or safety risk to the public.

(Ord. 11-9; Ord. 09-10)

20.01.06. No Mandatory Duty—Civil Liability.

It is the intent of the City Council that in establishing performance standards or establishing the authority to act by a City officer or employee, these standards shall not be construed as creating a mandatory duty if the officer or employee fails to perform his or her directed duty or duties.

(Ord. 11-9; Ord. 09-10)

20.01.07. Definitions.

The following words and phrases, whenever used in this Title, shall be constructed as defined in this Section, unless a different meaning is specifically defined elsewhere in this Title and specifically stated to apply:

1. **"Abatement"** means any action the City may take on public or private property and any adjacent property as may be necessary to remove or alleviate a violation, including demolition, removal, repair, boarding, and securing or replacement of property.

2. **"Administrative Law Judge"** means the administrative law judge presiding over the Administrative Code Enforcement Program established pursuant to Chapter 3.11 of the

City Code.

3. **"Administrative Law Judge Order"** means an order issued by an Administrative Law Judge. The order may include an order to abate the violation, pay civil penalties and administrative costs, or take any other action as authorized or required by this Title and City ordinances.

4. **"City"** means the area within the territorial city limits of the City of Saratoga Springs.

5. **"City Code"** means any ordinance passed by the City Council ~~including Titles 1-20~~ and any other Title, ordinance, regulation, or amendment lawfully codified pursuant to Utah law including Utah Code § 10-3-707.

6. **"City Council"** means the City Council of the City of Saratoga Springs.

7. **"Code Enforcement Coordinator"** means the person who has been designated~~delegated~~ by the Saratoga Springs City Manager to coordinate and schedule hearings, mail out notices of hearings, send out notices of costs and itemized bills, and perform other duties as specified in this Title.

8. **"Code Enforcement Officer"** means any person designated~~delegated~~ by the City Manager with the responsibility to enforce~~for enforcing~~ the City Code and ordinances passed by the City Council and who performs the duties specified herein. The Code Enforcement Officer may or may not be a member of the Saratoga Springs Police Department. Code Enforcement Officers include the City Building Official, Planning Director, City Building and Engineering Inspectors, and their designees.

9. **"Code enforcement performance bond"** means a bond posted by a responsible person to ensure compliance with the City Code, applicable state law, a judicial action, or an Administrative Law Judge Order.

10. **"Code enforcement tax lien"** means a lien recorded to collect outstanding civil penalties, administrative fees, and costs.

11. **"Financial institution"** means any person that holds a recorded mortgage or deed of trust on a property.

12. **"Good cause"** means incapacitating illness, death, lack of proper notice, unavailability due to unavoidable, unpreventable, or extenuating emergency or circumstance, imminent and irreparable injury, and acts of nature adverse to performing required acts.

13. **"Imminent life or safety hazard"** means any condition that creates a present, extreme, and immediate danger to life, property, health, or public safety.

14. **"Legal interest"** means any interest that is represented by a document, such as a deed of trust, quitclaim deed, mortgage, judgment lien, tax or assessment lien, mechanic's lien, or

other similar instrument that is recorded with the County Recorder.

15. **"Notice of compliance"** means a document issued by the City representing that a property complies with the requirements outlined in a notice of violation, administrative citation, or Administrative Law Judge Order.

16. **"Notice of satisfaction"** means a document or form that indicates that all outstanding civil penalties and costs have been either paid in full, or that the City has negotiated an agreed amount, or that a subsequent administrative or judicial decision has resolved the outstanding debt. In addition to the satisfaction of the financial debt, the property must also be in compliance with the requirements outlined in the notice of violation.

17. **"Notice of violation"** means a written notice prepared by a Code Enforcement Officer that informs a responsible person of code violations and orders them to take certain steps to correct the violations.

18. **"Oath"** includes affirmations and oaths.

19. **"Ordinance Enforcement Administrator"** means the supervisor of the Ordinance Enforcement and Animal Control Division as designated by~~, who is~~ the City Manager~~ or designee~~.

20. **"Person"** means any person, firm, joint venture, joint stock company, partnership, association, club, company, corporation, business, trust, organization, or the manager, lessee, agent, sergeant, officer, or employee of any of them, or any other entity that is recognized by law as the subject of rights or duties.

21. **"Property owner"** means the record owner of real property based on the county recorder's records.

22. **"Public nuisance"**:
    a. means any condition caused, maintained, or permitted to exist that constitutes a threat to the public's health, safety, and welfare, or that significantly obstructs, injures, or interferes with the reasonable or free use of property in a neighborhood or community or by any considerable number of persons; and
    b. also has the same meaning as set forth in the Utah Code or Utah common law.

23. **"Responsible person"** means a person~~ who commits a violation of the City Code~~ including the property owner and any person or entity, whether as owner, agent, or occupant, who commits, aids in committing, contributes to, causes, supports, retains, or permits a City Code violation in the City, regardless of whether that violation occurs on real property. Every successive owner or tenant of a property or premises who fails to correct a City Code violation upon or in the use of property or premises caused by a former owner or tenant is also a responsible person. In cases where there is more than one responsible person, the City may proceed against one, some, or all of them.

24. **"Substantial Evidence"** means relevant, reliable, factual, and credible evidence that is sufficient to convince a reasonable mind that a violation of the City Code has been committed. Substantial evidence does not mean that all or the majority of the evidence is in support of the decision made.

25. **"Written"** includes handwritten, typewritten, photocopied, computer printed, or facsimile.

(Ord. 11-9; Ord. 09-10)

20.01.08. Acts Include Causing, Aiding, or Abetting.

Whenever any act or omission is made unlawful in this Title, it shall include causing, permitting, aiding, or abetting such act or omission.

(Ord. 11-9; Ord. 09-10)

20.01.09. Service of Process.

1. Except for violations of Title 19, whenever service is required to be given under this Title for enforcement purposes, a Code Enforcement Officer or the Code Enforcement Coordinator (or designees) shall serve the document by any of the following methods, unless otherwise provided:
    a. Regular mail, postage prepaid, to the last known address of the owner(s) or other responsible person(s);
    b. Posting the notice conspicuously on or in front of the property. If not inhabited, the notice must also be mailed as described in (a) above;
    c. Personal service pursuant to Utah Rule of Civil Procedure 4; or
    d. Published in a newspaper of general circulation where the identity or whereabouts of the person to be served are unknown and cannot be ascertained through reasonable diligence, where service is impracticable under the circumstances, or where there exists good cause to believe that the person to be served is avoiding service of process.

2. For violations of Title 19, or any land use ordinance as defined in Utah Code Section 10-9a-102, whenever service is required to be given under this Title for enforcement purposes, the document shall be served in accordance with Utah Code § 10-9a-803, as amended, which~~which, as of the 2013 Utah Legislative Session,~~ requires written notice, by mail or hand delivery, of each ordinance violation to the address of the owner of record on file in the office of the county recorder or person designated in writing by the owner of record as the owner's agent for the purpose of receiving notice of an ordinance violation.

3. Service by regular mail in the manner described above shall be deemed served three business days, not including the day it was mailed, after the date of mailing.

4. If service complies with the requirements of this Section, it shall be deemed a valid service even if a party claims not to have received the service and it shall not affect the validity of any proceedings taken under this Title.

5. The failure to serve all responsible person(s) shall not affect the validity of any proceedings.

(Ord. 11-9; Ord. 09-10)

20.01.10. Constructive Notice of Recorded Documents.

Whenever a document is recorded with the County Recorder as authorized or required by this Title or applicable state codes, recordation shall provide constructive notice of the information contained in the recorded documents.

(Ord. 11-9; Ord. 09-10)

Chapter 20.02. General Authority and Offenses.

Sections:

20.02.01. General Enforcement Authority.
20.02.02. Adoption of Policy and Procedures.
20.02.03. Authority to Inspect.
20.02.04. Power to Cite.
20.02.05. False Information or Refusal Prohibited.
20.02.06. Failure to Obey a Subpoena.

20.02.01. General Enforcement Authority.

1. Whenever a Code Enforcement Officer finds that a violation of the City Code or City ordinances has occurred or continues to exist, the appropriate administrative enforcement procedure may be used as outlined in this Title.

2. So long as authorized in this Title, a Code Enforcement Officer has the authority and power necessary to gain compliance with the provisions of the City Code and City ordinances. These powers may include the power to issue notices of violation and administrative citations, inspect public and private property, abate violations on public and private property, and use whatever judicial and administrative remedies are available under the City Code or applicable state law.

(Ord. 11-9; Ord. 09-10)

20.02.02. Adoption of Policy and Procedures.

The Administrative Law Judge is authorized to develop policies and procedures relating to the hearing procedures, scope of hearings, and subpoena powers subject to the requirements of this Title, City Code, and state law. The City Council shall determine other matters relating to the Administrative Code Enforcement Hearing Program.

(Ord. 11-9; Ord. 09-10)

20.02.03. Authority to Inspect.

1. A Code Enforcement Officer is authorized to enter upon any property or premises to ascertain whether the provisions of the City Code or City ordinances are being obeyed and to make any examinations and surveys as may be necessary in the performance of the enforcement duties. This may include the taking of photographs, samples, or other physical evidence.

2. All inspections, entries, examinations, and surveys shall be done in a reasonable manner based upon cause. Except as otherwise authorized in this Title, if the responsible person refuses to allow a Code Enforcement Officer to enter the property, then the Code

Enforcement Officer shall obtain a search warrant or other judicial order.

(Ord. 11-9; Ord. 09-10)

20.02.04. Power to Cite.

Each Code Enforcement Officer is authorized to cite any person whenever there is substantial evidence to believe that the person has committed a violation of the City Code or City ordinances.

(Ord. 11-9; Ord. 09-10)

20.02.05. False Information or Refusal Prohibited.

It shall be unlawful for any person to willfully make a false statement or refuse to give his or her name or address with intent to deceive or interfere with a city employee when in the performance of his or her official duties under the provisions of this Title. A violation of this Section is a class C misdemeanor.

(Ord. 11-9; Ord. 09-10)

20.02.06. Failure to Obey a Subpoena.

It is unlawful for any person to refuse or fail to obey a subpoena issued for an administrative code enforcement hearing. Failure to obey a subpoena constitutes contempt and may be prosecuted as a class C misdemeanor.

(Ord. 11-9; Ord. 09-10)

Chapter 20.03. Administrative Code Enforcement Procedures.

Sections:

20.03.01. Authority.
20.03.02. Notice of Violation; Administrative Abatement.
20.03.03. Failure to Bring Property into Compliance.
20.03.04. Inspections.
20.03.05. Emergency Abatement.
20.03.06. Demolitions.
20.03.07. Administrative Citations.
20.03.08. Civil Penalties, Fines, and Fees.
20.03.09. Animal Citations.

20.03.01. Authority.

Any condition caused, maintained, or permitted to exist in violation of any provisions of the City Code or City ordinances that constitutes a violation may be abated by the City pursuant to the procedures set forth in this Chapter.

(Ord. 11-9; Ord. No. 09-10)

20.03.02. Notice of Violation; Administrative Abatement.

1. Whenever a Code Enforcement Officer determines that a violation of the City Code or City ordinances has occurred or continues to exist, the Code Enforcement Officer may choose to proceed under these administrative abatement procedures.
2. If the administrative abatement procedure is used, a notice of violation shall be issued to the responsible person. The notice of violation shall include the following information:
    a. name of responsible person;
    b. street address or location of violation;
    c. date violation observed;
    d. all codes or ordinances violated and an explanation as to how~~why~~ the code or ordinance was violated;
    e. a statement explaining the type of remedial action required to permanently correct outstanding violations, which may include corrections, repairs, demolition, removal, or other appropriate action;
    f. specific date to correct the violations listed in the notice of violation, which date shall be at least ten calendar ~~ten~~ days from the date of service;
    g. explanation of the consequences if the responsible person fails to comply with the terms and deadlines as prescribed in the notice of violation, which may include criminal prosecution, civil penalties, administrative citations, revocation of permits, recordation of the notice of violation on the property, withholding of future municipal permits, abatement of the violation, costs, administrative fees, and any other legal remedies;
    h. a statement that civil penalties will begin to accrue or be imposed immediately on

expiration of the date to correct violations;

i. the amount of the civil penalty on each violation and a statement as to whether the penalty will accrue daily until the property is brought into compliance;
j. that only one notice of violation is required for any 12-month period, and that civil penalties or fines will begin or be imposed immediately upon any subsequent violations of the notice; and
k. procedures to request a hearing as provided in Section 20.04.03 and consequences for failure to request one.

3. The responsible person may request a hearing on renewed violations by following the same procedure as provided for in the original notice.

4. The notice of violation shall be served by one of the methods of service listed in Section 20.01.09 of this Title.

5. More than one notice of violation may be issued against the same responsible person if it encompasses different dates or different violations.

(Ord. 11-9; Ord. 09-10)

20.03.03. Failure to Bring Property into Compliance.

If the responsible person fails to bring a violation into compliance within the time specified in the Notice of Violation, civil penalties as provided in Section 20.03.08 shall be owed to the City.

(Ord. 11-9; Ord. 09-10)

20.03.04. Inspections.

1. It shall be the duty of the responsible person served with a Notice of Violation to request an inspection when his or her property has been brought into compliance. It is prima facie evidence that the violation remains on the property if no inspection is requested.

2. Civil penalties accumulate daily until the property has been inspected and a notice of compliance is issued.

3. Reinspection fees shall be assessed if more than one inspection is necessary.

(Ord. 11-9; Ord. 09-10)

20.03.05. Emergency Abatement.

1. **Authority.**
   a. Whenever the Ordinance Enforcement Administrator determines that an imminent life or safety hazard exists that requires immediate correction or

elimination, the Ordinance Enforcement Administrator may exercise the following powers without prior notice to the responsible person:

i. order the immediate vacation of any tenants, and prohibit occupancy until all repairs are completed;
ii. post the premises as unsafe, substandard, or dangerous;
iii. board, fence, or secure the building or site;
iv. raze and grade that portion of the building or site to prevent further collapse, and remove any hazard to the general public;
v. make emergency repairs as necessary to eliminate any imminent life or safety hazard; or
vi. take any other action appropriate to eliminate the emergency.

b. The Ordinance Enforcement Administrator has the authority, based on cause, to enter the property without a search warrant or court order to accomplish the above listed acts to abate the safety hazard.
c. The responsible person shall be liable for all costs associated with the abatement of the life safety hazard. Costs may be recovered pursuant to this Title.

2. **Procedures.**
   a. The Ordinance Enforcement Administrator shall pursue only the minimum level of correction or abatement as necessary to eliminate the immediacy of the hazard. Costs incurred by the City during the emergency abatement process shall be assessed and recovered against the responsible person through the procedures outlined in Chapter 20.05 of this Title.
   b. The Ordinance Enforcement Administrator may also pursue any other administrative or judicial remedy to abate any remaining violations.

3. **Notice of Emergency Abatement.**
   a. After an emergency abatement, the City shall notify the owner or responsible person of the abatement action taken.
   b. The notice shall be served within ten days of completion of the abatement.

(Ord. 11-9; Ord. 09-10)

20.03.06. Demolitions.

1. **Authority.** Whenever the Ordinance Enforcement Administrator, Chief Building Officer, or Fire Inspector determines that a property or building requires demolition, any one of them may order demolition or removal of the offending structure, or exercise any or all of the powers listed in Section 20.03.05, once appropriate notice has been given to a responsible person pursuant to applicable building codes, fires codes, and state law. The responsible person shall be liable for all costs associated with the demolition. Costs may be recovered pursuant to this Title.

2. **Procedures.** Once all of the notice requirements of the applicable laws have been met, the property will be abated pursuant to the abatement remedy. Other applicable remedies may also be pursued.

(Ord. 11-9; Ord. No. 09-10)

20.03.07. Administrative Citations.

1. **Declaration of Purpose.**
    a. The City Council finds that there is a need for an alternative method of enforcement for minor violations of the City Code. The City Council further finds that an appropriate method of enforcement is an administrative citation program.
    b. The procedures established herein shall be in addition to criminal, civil, administrative, or any other legal remedy established by law that may be pursued to address violations of the City Code or City ordinances.

2. **Authority.**
    a. Any person violating any provision of the City Code or City ordinances may be issued an administrative citation by a Code Enforcement Officer as provided in this Section.
    b. A civil penalty shall be assessed by means of an administrative citation issued by the Officer and shall be payable directly to the City Treasurer's Office.
    c. Penalties assessed by means of an administrative citation shall be collected in accordance with the procedures specified in Chapter 20.05 of this Title.

3. **Procedures.**
    a. Upon discovering any violation of the City Code or City ordinances, a Code Enforcement Officer may issue an administrative citation to the responsible person in the manner prescribed in this Section.
    b. The administrative citation shall be issued on a form meeting the requirements of subsection 20.03.07(4) of this Title..

    c. Once the responsible person has been located, the Code Enforcement Officer shall attempt to obtain the signature of that person on the administrative citation. If the responsible person refuses or fails to sign the administrative citation, the failure or refusal shall not affect the validity of the citation and subsequent proceedings. If the Code Enforcement Officer is unable to locate the responsible person for the violation, then the administrative citation shall be mailed to the responsible person in the manner prescribed in Section 20.01.09 of this Title.
    d. Except for Title 19 violations as specified in Section 20.01.09, if no one can be located at the property, then the administrative citation may be posted in a conspicuous place on or near the property and a copy subsequently mailed to the responsible person in the manner prescribed in Section 20.01.09 of this Title.
    e. The administrative citation shall also contain the signature of the Code Enforcement Officer.
    f. The failure of any person with an interest in the property to receive notice shall not affect the validity of any proceedings taken under this Part, except for Title 19 violations as specified in Section 20.01.09.

4. **Contents of Administrative Citation.** An administrative citation shall include:

a. the date and location of the violations and the approximate time the violations were observed;
b. the Code sections violated and the subject matter of those sections;
c. the amount of penalty imposed for the violations;
d. an explanation as to how the penalty shall be paid, the time period by which the penalty shall be paid, and the consequences of failure to pay the penalty;
e. notice of the right and the procedures to request a hearing;
f. the signature of the Code Enforcement Officer and the signature of the responsible person, if he or she can be located, as outlined in Section 20.03.07(3)(c) of this Title; and
g. any other information deemed helpful or necessary by the Code Enforcement Administrator.

(Ord. 11-9; Ord. 09-10)

20.03.08. Civil Penalties, Fines, and Fees.

1. **In General**. As specified in the notice of violation or administrative citation, civil penalties may be assessed on a daily basis until the violation is corrected or immediately if an administrative citation is issued. Interest shall be assessed per City policy on all outstanding civil penalties balances until the case has been paid in full. The City may use one form for both notices of violation and administrative citations. Payment of the penalties, fines, and fees shall not excuse the failure to correct the violations, nor shall it bar further enforcement action by the City if the violation is not corrected.
2. **Amount**. Unless specified otherwise in the more specific section of the City Code or the City's Consolidated Fee Schedule, the penalties shall be as follows:
    a. Fees for General City Code Violations:
        i. Administrative Citations:
            A. First Offense: $100
            B. Second Offense (within one year from first offense): $200
            C. Third (or more) Offense (within one year from first offense): $400
        ii. Civil Penalties per Notice of Violation or Administrative Law Judge Order:
            A. $25 per day per violation, accruing until the violation is brought into compliance
    b. Fees for Violations of Title 13, Traffic and Parking:
        i. Parking Violations:
            A. Administrative Citations:
                I. First Offense: $25
                II. Second Offense (within one year from first offense): $50
                III. Third (or more) Offense (within one year from first offense): $100
            B. Civil Penalties per Notice of Violation or Administrative Law Judge Order:
                I. $25 per day per violation, accruing until the violation is brought into compliance.

ii. Traffic Violations:

A. Administrative Citations:

I. First Offense: $50

II. Second Offense (within one year from first offense): $100

III. Third (or more) Offense (within one year from first offense): $150

B. Civil Penalties per Notice of Violation or Administrative Law Judge Order:

I. $25 per day per violation, accruing until the violation is brought into compliance.

c. Hearing Fee for Default Hearings or Administrative Code Enforcement Hearings: $100 if Responsible Person is unsuccessful or fails to appear after proper notice.

3. **Non-Payment of Citation**.

a. If the responsible person fails to make any payments within the time period specified in the notice, the City may send additional notices, file a small claims action, refer the matter to a collection agency, or pursue any remedy in law or equity.

b. Interest may be assessed on all outstanding amounts at a rate of up to 20% per annum.

c. The City has the authority to collect all costs associated with the filing of such actions, including administrative fees and service costs.

4. **Modification of Civil Penalties.**

a. Upon completion of the required action pursuant to the notice of violation, administrative citation, or administrative enforcement order, the Administrative Law Judge may modify the civil penalties on a finding of good cause as defined in this Title.

b. Civil penalties may be waived or modified by the Administrative Law Judge if there is a finding of good cause based on the responsible person's claim of nonconforming use, as defined per state law, or conditional use, as defined by the City Code, and:

i. the City's ability to verify the claim; or

ii. the responsible person's filing of an application for either use before the date of the Notice of Violation or Administrative Citation.

c. **Reductions and Waivers for Animal Violations.**

i. The Code Enforcement Coordinator and Administrative Law Judge may grant reductions and waivers of fines for animal violations under the following circumstances:

A. Licensing and rabies fines may be dismissed upon proof that the violation has been corrected.

B. $25.00 reduction may be given for first time offenders with good cause.

C. Offenders with a history of non-payment should generally not receive a reduction or waiver of fines or fees.

D. At the City's discretion, flexible monthly plans may be set up according to responsible person's needs.
E. Fines may be dismissed if the animal in violation is deceased.

(Ord. 11-9; Ord. 09-10)

Chapter 20.04. Administrative Code Enforcement Hearing Procedures.

Sections:

20.04.01. Declaration of Purpose.
20.04.02. Authority and Scope of Hearings.
20.04.03. Powers of the Administrative Law Judge.
20.04.04. Request for Administrative Code Enforcement Hearing.
20.04.05. Notification of Administrative Code Enforcement Hearing.
20.04.06. Default Hearings and Orders.
20.04.07. Procedures at Administrative Code Enforcement Hearing.
20.04.08. Failure to Attend Administrative Code Enforcement Hearing.
20.04.09. Administrative Law Judge Order.
20.04.10. Failure to Comply with Order.
20.04.11. Administrative Enforcement Appeals.

20.04.01. Declaration of Purpose.

The City Council finds that there is a need to establish uniform procedures for administrative code enforcement hearings conducted pursuant to this Title. It is the purpose and intent of the City Council to afford due process of law to any person who is directly affected by an administrative action. Due process of law includes notice, an opportunity to participate in the administrative hearing including the opportunity to call witnesses, present evidence, and cross-examine witnesses, and an explanation of the reasons justifying the administrative action. These procedures are also intended to establish a forum to efficiently, expeditiously, and fairly resolve issues raised in any administrative code enforcement action.

(Ord. 11-9; Ord. 09-10)

20.04.02. Policies and Procedures of Hearings.

The Administrative Law Judge may develop policies and procedures to regulate the hearing process for any violation of the City Code that is handled pursuant to the administrative abatement procedures, the emergency abatement procedures, the demolition procedures, or the administrative citation procedures. Such policies and procedures shall be consistent with this Title 20 and other City ordinances and codes.

(Ord. 11-9; Ord. 09-10)

20.04.03. Powers of the Administrative Law Judge.

1. The Administrative Law Judge has the authority to hold hearings, determine if violations of city ordinances exist, order compliance with city ordinances, and enforce compliance as provided in this Title on any matter subject to the provisions of the Title.

2. The Administrative Law Judge may continue a hearing based on good cause—as defined

in this Chapter—shown by one of the parties to the hearing. The Administrative Law Judge must enter on the record the reason for granting a continuance.

3. The Administrative Law Judge may issue subpoenas for witnesses, documents, and other evidence where such is deemed necessary to decide the issues at the hearing. All costs related to the subpoena, including witness and mileage fees, shall be borne by the party requesting the subpoena. The Administrative Law Judge shall develop policies and procedures relating to the issuance of subpoenas in administrative code enforcement hearings, including the form of the subpoena and related costs. In the absence of any adopted policies, the Administrative Law Judge shall follow the Utah Rules of Civil Procedure.

4. The Administrative Law Judge has continuing jurisdiction over the subject matter of an administrative code enforcement hearing for the following purposes:

    a. granting a continuance;
    b. ordering compliance by issuing an Administrative Law Judge Order using any remedies available under the law; and
    c. ensuring compliance of that order, which includes the following powers:
        i. to authorize the City to enter and abate a violation,
        ii. to modify an Administrative Law Judge Order, or
        iii. to grant a new hearing where extraordinary circumstances exist.

5. The Administrative Law Judge has the authority to require the responsible person to post a code enforcement performance bond to ensure compliance with an Administrative Law Judge Order.

6. The Administrative Law Judge is subject to disqualification for bias, prejudice, interest, or any other reason for which a judge may be disqualified in a court of law. Rules and procedures for disqualification and replacement shall be in accordance with the Utah Rules of Civil Procedure.

(Ord. 11-9; Ord. 09-10)

20.04.04. Request for Administrative Code Enforcement Hearing.

1. A person served with one of the following documents or notices has the right to request an administrative code enforcement hearing if the request is filed within ten calendar days from the date of service:
    a. notice of violation;
    b. notice of itemized bill for costs;
    c. administrative citation; or
    d. notice of emergency abatement.

2. The request for hearing shall be made in writing and filed with the Code Enforcement Coordinator, who then shall provide a copy of the request to the Administrative Law

Judge and serve the request to all parties. The request shall contain the case number, the address of the violation, the signature of the responsible party, and the reason for the hearing including justifications for the offense, defenses, and requests for waiver or reduction in fines.

3. As soon as practicable after receiving the written notice of the request for hearing, the Code Enforcement Coordinator shall schedule a date, time, and place for the hearing.

4. Failure to request a hearing as provided shall constitute a waiver of the right to a hearing and a waiver of the right to challenge the action.

(Ord. 11-9; Ord. 09-10)

20.04.05. Notification of Administrative Code Enforcement Hearing.

1. Written notice of the date, time, and place of the hearing shall be served by the Code Enforcement Coordinator or Code Enforcement Officer to the responsible person as soon as practicable prior to the date of the hearing.

2. The format and contents of the hearing notice shall be in accordance with rules and policies promulgated by the Administrative Law Judge. In the absence of such rules, the format and contents of the hearing shall be drafted by the Code Enforcement Coordinator so as to be consistent with this Title 20.

3. The notice of hearing shall be served by any of the methods of service listed in Section 20.01.09 of this Title.

(Ord. 11-9; Ord. 09-10)

20.04.06. Default Hearings and Orders.

1. If the responsible person fails to request an administrative code enforcement hearing before the expiration of the ten day deadline, the case shall be set for a default hearing by the Code Enforcement Coordinator. The Code Enforcement Coordinator shall notify the responsible person of the date, time, and place of the hearing by one of the methods listed in Section 20.01.09.
2. A default hearing shall also be scheduled for all cases that have outstanding or unpaid civil penalties, fines, fees, or costs due to the City before collection, if a hearing on that case has not already been held.

3. At the default hearing, the responsible person shall have the opportunity to present evidence to show that good cause exists, as defined in the Title, to do one or more of the following:
    a. waive or reduce the fines which have accumulated;
    b. postpone an abatement action by the City; or
    c. excuse the responsible person's failure to request a hearing within the ten day

period.

4. If the evidence shows that the violations existed, the Administrative Law Judge shall enter an order requiring abatement of the violations and the payment of all fines, costs, and fees. Fines and costs shall run until the City issues a notice of compliance stating when the violations were actually abated. The order by the Administrative Law Judge shall not suspend further accrual of fines and costs.

   (Ord. 11-9; Ord. 09-10)

20.04.07. Procedures at Administrative Code Enforcement Hearing.

1. Administrative code enforcement hearings are intended to be informal in nature. Formal rules of evidence and discovery do not apply; however, an informal exchange of discovery may be required. The request for discovery must be in writing and filed at least 10 business days before the hearing. Failure to request discovery shall not be a basis for a continuance.

2. Complainant information is protected and shall not be released unless the complainant is a witness at the hearing.

3. The procedure and format of the administrative hearing shall follow the procedures promulgated by the Administrative Law Judge.

4. The City bears the burden of proof at an administrative code enforcement hearing to establish the existence of a violation of the City Code or City ordinances.

5. The standard of proof to be used by the Administrative Law Judge in deciding the issues at an administrative hearing is whether there is substantial evidence in the record that the violations exist and that the person before the Judge is the responsible person.
6. Hearsay evidence, as defined by the Utah Rules of Evidence, is admissible so long as such hearsay evidence is not the only evidence relied upon by the Administrative Law Judge.

7. Each party shall have the opportunity to cross-examine witnesses that are in attendance and present evidence in support of his or her case. A written declaration signed under penalty of perjury may be accepted in lieu of a personal appearance so long as the declaration is not the only evidence relied upon by the Administrative Law Judge. Testimony may be given by telephone or other electronic means so long as the testimony by telephone or electronic means is not the only evidence relied upon by the Administrative Law Judge.

8. All hearings are open to the public. They shall be recorded by audio recording.

9. Hearings may be held at the location of the violation if the Administrative Law Judge so chooses and means are provided for an audio recording of the proceeding.

10. The responsible person has a right to be represented by an attorney.

11. No new hearing shall be granted, unless the Administrative Law Judge determines that extraordinary circumstances exist which justify a new hearing.

    (Ord. 11-9; Ord. 09-10)

20.04.08. Failure to Attend Administrative Code Enforcement Hearing.

Any party whose property or actions are the subject of any administrative code enforcement hearing and who fails to appear at the hearing is deemed to have waived the right to a hearing, which will result in a default judgment for the City provided that proper notice of the hearing has been provided. The City shall not be required to put on evidence or prove that a violation was committed by the Responsible Person in such an event, and an entry of a default judgment shall have the same effect as if there was a judgment on the merits of the case.

(Ord. 11-9; Ord. 09-10)

20.04.09. Administrative Law Judge Order.

1. The parties may enter into a stipulated agreement, which must be signed by both parties or verbally stipulated on the record during the administrative code enforcement hearing. This agreement or stipulation shall be entered as the Administrative Law Judge Order. Entry of this agreement or stipulation shall constitute a waiver of the right to a hearing and the right to appeal.
2. Once all evidence and testimony are completed, the Administrative Law Judge shall issue an Administrative Law Judge Order that affirms, modifies, or rejects the notice, citation, or action by the Code Enforcement Officer. The Administrative Law Judge may increase or decrease the total amount of civil penalties and costs that are due pursuant to the City's fee schedule and the procedures in this Title.

3. The Administrative Law Judge may order the City to enter the property and abate all violations, which may include removing animals kept in violation of the City Code.

4. The Administrative Law Judge may revoke a kennel permit, an animal license, or the right to possess animals as provided in the City Code.

5. As part of the Administrative Law Judge Order, the Administrative Law Judge may reduce or stay civil penalties on the condition that the responsible person complete compliance by specified deadlines.

6. The Administrative Law Judge may schedule subsequent review hearings as may be necessary or as requested by a party to the hearing to ensure compliance with the Administrative Law Judge Order.

7. The Administrative Law Judge may order the responsible person to post a performance

bond to ensure compliance with the order.

8. The Administrative Law Judge Order shall become final on the date of the signing of the order.

9. The Administrative Law Judge Order shall be served on all parties by any one of the methods listed in Section 20.01.09 of this Title.
(Ord. 11-9; Ord. 09-10)

20.04.10. Failure to Comply with Order.

1. After the Administrative Law Judge issues an Administrative Law Judge Order, the Code Enforcement Officer and Administrative Law Judge may monitor the violations and determine compliance.

2. Upon the failure of the responsible person to comply with the terms and deadlines set forth in the Administrative Law Judge Order, the City may use all appropriate legal means to recover the civil penalties and administrative costs to obtain compliance.

(Ord. 11-9; Ord. 09-10)

20.04.11. Administrative Enforcement Appeals.

1. Any person adversely affected by any decision made in the exercise of the provisions of this Chapter may file a petition for review of the decision or order to district court within thirty days after the decision is rendered.

2. No person may challenge in district court the Administrative Law Judge's decision until that person has exhausted his or her administrative remedies herein.

3. Unless otherwise provided by the Utah Rules of Civil Procedure or local court rules, within 120 days after submitting the petition, the party petitioning for appeal shall request a copy of the record of the proceedings, including transcripts of hearings when necessary. The Code Enforcement Coordinator shall not submit copies of files or transcripts to the reviewing court until the party petitioning for appeal has paid all required costs. The petitioning party's failure to properly arrange for copies of the record, or to pay the full costs for the record, within 180 days after the petition for review was filed shall be grounds for dismissal of the petition, unless otherwise provided by the Utah Rules of Civil Procedure or local court rules.

4. If a transcript of a hearing cannot be prepared because the tape recording is incomplete or unintelligible, the district court may, in its discretion, remand the matter to the Administrative Law Judge for a supplemental proceeding to complete the record. The district court may limit the scope of the supplemental proceeding to issues that, in the court's opinion, need clarification.

5. The district court's review is limited to the record of the administrative decision that is being appealed. The court shall not accept nor consider any evidence that is not part of

the record of that decision.

6. The courts shall:
    a. presume that the Administrative Law Judge's decision and orders are valid; and
    b. review the record to determine whether or not the decision was arbitrary, capricious, or illegal.

(Ord. 11-9; Ord. No. 09-10)

20.04.12. Revocation of Animal Licenses.

The Administrative Law Judge may revoke animal licenses, revoke ~~and~~ the rights of a Responsible Person to legally own an animal inside City boundaries, and/or order the removal of an animal(s) if the responsible person receives three or more animal violations within any one 12-month period. In such a case, a Revocation Hearing shall be set and a notice of the hearing served by any of the methods in 20.01.09. During the Revocation Hearing, the Administrative Law Judge shall determine if there is substantial evidence in the record to show that three or more animal violations within any one 12-month period have occurred.

Chapter 20.05. Administrative and Judicial Remedies.

Sections:

20.05.01. Recordation of Notices of Violation and Administrative Law Judge Orders.
20.05.02. Abatement of Violation.
20.05.03. Recovery of Costs.
20.05.04. Administrative Fees.
20.05.05. Injunctions.
20.05.06. Performance Bonds.
20.05.07. Code Enforcement Tax Liens.
20.05.08. Recovery of Costs by Writ of Execution.
20.05.09. Recovery of Costs by Writ of Garnishment.

20.05.01. Recordation of Notices of Violation and Administrative Law Judge Orders.

1. **Declaration of Purpose.**
    a. The City Council finds that there is a need for alternative methods of enforcement for violations of the City Code and City ordinances that are found to exist on real property. The City Council further finds that an appropriate method of enforcement for these types of violations is the issuance and recordation of notices of violation and Administrative Law Judge Orders.
    b. The procedures established in this shall be in addition to criminal, civil, or any other remedy established by law that may be pursued to address the violation of the City Code or City ordinances.

2. **Authority.** Whenever a Code Enforcement Officer or Code Enforcement Coordinator determines that a property or violation has not been brought into compliance as required in this Title, the Code Enforcement Coordinator has the authority to record the notice of violation or Administrative Law Judge Order with the Recorder's Office of Utah County.

3. **Procedures for Recordation.**
    a. If a Code Enforcement Officer issues a notice of violation or administrative citation to a responsible person, and the property remains in violation after the deadline established in the notice of violation or is not corrected after the administrative citation is issued, and no request for an administrative hearing has been filed, the Code Enforcement Coordinator shall record a notice of violation with the Recorder's Office of Utah County.
    b. If an administrative hearing is held, and an order is issued in the City's favor, the Code Enforcement Coordinator shall record the Administrative Law Judge's Administrative Law Judge Order with the Recorder's Office of Utah County.
    c. The recordation shall include the name of the property owner, the parcel number, the legal description of the parcel, a copy of the notice of violation, administrative citation, or order, and any other relevant information.
    d. The recordation does not encumber the property, but merely places future interested parties on notice of any continuing violation found upon the property.

4. **Service of Notice of Recordation.** A notice of the recordation shall be served on the responsible person and the property owner pursuant to any of the methods of service set forth in Section 20.01.09 of this Title.

5. **Failure to Request.** The failure of any person to file a request for an administrative code enforcement hearing when served with a notice of violation shall constitute a waiver of the right to an administrative hearing and shall not affect the validity of the recorded notice of violation.

6. **Notice of Compliance—Procedures.**
    a. When the violations have been corrected, the responsible person or property owner may request an inspection of the property from a Code Enforcement Officer.
    b. Upon receipt of a request for inspection, the Code Enforcement Officer shall reinspect the property as soon as practicable to determine whether the violations listed in the notice of violation, administrative citation, or the order have been corrected, whether all necessary permits have been issued, and/or whether final inspections have been performed.
    c. The Code Enforcement Officer, in conjunction with the Code Enforcement Coordinator, shall serve a notice of compliance to the responsible person or property owner in the manner provided in Section 20.01.09 of this Title if the Code Enforcement Officer determines that:
        i. all violations listed in the recorded notice of violation or order have been corrected;
        ii. all necessary permits have been issued and finalized;
        iii. all civil penalties, fines, and costs assessed against the property have been paid or satisfied; and/or
        iv. the party requesting the notice of compliance has paid all administrative fees and costs.
    d. If a request to issue a notice of compliance is denied, then, upon request, the Code Enforcement Officer, in conjunction with the Code Enforcement Coordinator, shall serve the responsible person with a written explanation setting forth the reasons for the Code Enforcement Officer's denial. The written explanation shall be served by any of the methods of service listed in Section 20.01.09 of this Title.

7. **Withholding the Issuance of Municipal Permits and Business Licenses.**
    a. The City may withhold permits and business licenses until a notice of compliance has been issued by a Code Enforcement Officer.
    b. The City may withhold business licenses, permits for kennels, permits for any alteration, repair, or construction pertaining to any existing or new structures or signs on the property, and any permits pertaining to the use and development of the real property or the structure.
    c. The City may, in its sole discretion, issue permits or business licenses that are necessary to obtain a notice of compliance or that are necessary to correct serious health and safety violations.

8. **Cancellation of Recorded Notice of Violation or Administrative Law Judge Order.** In conjunction with the Code Enforcement Officers, the Code Enforcement Coordinator shall record the notice of compliance with the County Recorder's Office. Recordation of the notice of compliance shall have the effect of canceling the recorded notice of violation, administrative citation, or recorded Administrative Law Judge Order but shall not cancel any outstanding fines, fees, or costs.

(Ord. 11-9; Ord. No. 09-10)

20.05.02. Abatement of Violation.

1. **Authority to Abate.**
   a. A Code Enforcement Officer is authorized to enter upon any property or premises to abate the violation of the City Code and City ordinances.
   b. A Code Enforcement Officer is authorized to assess all costs for the abatement to the responsible person and use any remedy available under the law to collect the costs.
   c. If additional abatement is necessary within two years, treble costs may be assessed against the responsible person(s) for the actual abatement.

2. **Procedures for Abatement.**
   a. Once the procedures set forth in this Title have been complied with, the violation may be abated by City personnel or by a private contractor acting under the direction of the City.
   b. These City personnel or private contractors may enter upon private property in a reasonable manner to abate the ordinance violation as specified in the notice of violation or Administrative Law Judge Order.
   c. If the responsible person abates the violation before the City performs the actual abatement pursuant to a notice of violation, administrative citation, or Administrative Law Judge Order, a Code Enforcement Officer may still assess all costs incurred by the City against the responsible person.
   d. When the abatement is completed, a report describing the work performed and an itemized account of the total abatement costs shall be prepared by the Code Enforcement Officer overseeing the abatement. The report shall contain the names and addresses of the responsible persons of each parcel and the tax parcel numbers.
   e. The Code Enforcement Coordinator shall serve the notice of costs and the itemized bill of costs through any of the means in Section 20.01.09. The notice shall demand full payment within twenty days to the City Treasurer.

   (Ord. 11-9; Ord. 09-10)

20.05.03. Recovery of Costs.

1. **Declaration of Purpose.**

a. The City Council finds that there is a need to recover costs incurred by Code Enforcement Officers and other City personnel who spend considerable time inspecting and reinspecting properties throughout the City in an effort to ensure compliance with the City Code or City ordinances.
b. The City Council further finds that the assessment of costs is an appropriate method to recover expenses incurred for actual costs of abating violations, reinspection fees, filing fees, attorney fees, hearing officer fees, title search, and any additional actual costs incurred by the City for each individual case.
c. The assessment and collection of costs shall not preclude the imposition of any administrative or judicial civil penalties or fines for violations of the City Code or City ordinances.

2. **Authority.**
   a. Whenever actual costs are incurred by the City on a property to obtain compliance with provisions of the City Code and City ordinances, a Code Enforcement Officer or Code Enforcement Coordinator may assess costs against the responsible person.
   b. Once a notice of violation has been issued, the property shall be inspected one time if the responsible person requests an inspection in writing. Any additional inspections shall be subject to reinspection fees pursuant to the City fee schedule.

3. **Notification of Assessment of Reinspection Fees.**
   a. Notification of reinspection fees may be provided in the notice of violation served to the responsible person.
   b. Reinspection fees assessed or collected pursuant to this Section shall not be included in any other costs assessed.
   c. The failure of any responsible person to receive notice of the reinspection fees shall not affect the validity of any other fees imposed under this Section.

4. **Failure to Timely Pay Costs.** The failure of any person to pay assessed costs by the deadline specified in the invoice shall result in a late fee pursuant to City ordinances.

(Ord. 11-9; Ord. No. 09-10)

20.05.05. Administrative Fees.

The Code Enforcement Officers and Code Enforcement Coordinator are authorized to assess administrative fees for costs incurred in the administration of the code enforcement program, such as investigation of violations, preparation for hearings, hearings, and the collection process. The fee assessed shall be the amount set forth in this Title or in the City fee schedule.

(Ord. 11-9; Ord. No. 09-10)

20.05.06. Injunctions.

In addition to any other remedy provided under the City Code or state codes, including criminal

prosecution or administrative remedies, any provision of the City Code may be enforced by injunction issued in the Fourth District Court upon a suit brought by the City.

(Ord. 11-9; Ord. No. 09-10)

20.05.07. Performance Bonds.

1. As part of any notice, order, or action, the Administrative Law Judge has the authority to require any responsible person to post a performance bond to ensure compliance with the City Code, City ordinances, or any judicial action.
2. If the responsible person fails to comply with the notice, order, or action, the bond will be forfeited to the City.

(Ord. 11-9; Ord. 09-10)

20.05.08. Code Enforcement Tax Liens.

1. **Declaration of Purpose.** The City Council finds that recordation of code enforcement tax liens will assist in the collection of civil penalties, administrative costs, and administrative fees assessed by the administrative code enforcement hearing program or judicial orders and lessen the cost to City taxpayers of code enforcement. The City Council further finds that collection of civil penalties, costs, and fees assessed for code enforcement violations is important in deterring future violations and maintaining the integrity of the City's code enforcement system. The procedures established in this Section shall be used to complement existing administrative or judicial remedies that may be pursued to address violations of the City Code or City ordinances.

2. **Tax Liens for Abatement Costs.**
    a. Once the City has abated a property for weeds, garbage, refuse, or unsightly or deleterious objects or structures, the Code Enforcement Coordinator shall prepare three copies of the Itemized Statement of Costs incurred in the removal and destruction of the violations and deliver them to the City Treasurer within ten days after completion of the work of removing the violations.
    b. The Code Enforcement Coordinator shall serve the Responsible Person by any of the methods in Section 20.01.09 a copy of the Itemized Statement of Costs informing him or her that a code enforcement tax lien is being recorded for the amount of actual costs of abatement. Payment shall be due within twenty calendar days from the date of mailing.
    c. Upon receipt of the Itemized Statement of costs, the City Treasurer shall record a Code Enforcement Tax Lien against the property with the county treasurer's office.
    d. The failure of any person with a financial interest in the property to actually receive the notice of the lien shall not affect the validity of the lien or any proceedings taken to collect the outstanding costs of abatement.

3. **Tax Liens for Judgments.** Once a judgment has been obtained from the appropriate court imposing costs, fines, or fees against the responsible person, the Code Enforcement Coordinator may record a code enforcement tax lien against any real property owned by the responsible person.

4. **Cancellation of Code Enforcement Tax Lien.**
    a. Once payment in full is received for the outstanding civil penalties and costs, or the amount is deemed satisfied pursuant to a subsequent administrative or judicial order, the Code Enforcement Coordinator shall either record a notice of satisfaction of judgment, or provide the property owner or financial institution, through any of the means of service in Section 20.01.09, with the notice of satisfaction of judgment so that it can record this notice with the county recorder's office.
    b. The notice of satisfaction of judgment shall include the same information as provided for in the original code enforcement tax lien.
    c. Such notice of satisfaction of judgment shall cancel the code enforcement tax lien.

(Ord. 11-9; Ord. 09-10)

20.05.09. Recovery of Costs by Writ of Execution.

After obtaining a judgment, the City may collect the obligation by use of all appropriate legal means. This may include the execution on personal property owned by the responsible person by filing a writ with the applicable court.

(Ord. 11-9; Ord. 09-10)

20.05.10. Recovery of Costs by Writ of Garnishment.

After obtaining a judgment, the City may collect the obligation by use of all appropriate legal means. This may include the garnishment of paychecks, financial accounts, and other income or financial assets by filing a writ with the applicable court.

(Ord. 11-9; Ord. 09-10)