AMERICAN FORK CITY
PLANNING COMMISSION AGENDA

Regular Session
October 04, 2023
Wednesday 6:00 PM

American Fork City Hall

31 North Church Street

American Fork City, UT 84003

https://www.americanfork.gov/AgendaCenter

Planning Commission Members

Christine Anderson, Chair

Chris Christiansen, Vice Chair

Jenny Peay

Bruce Frandsen

Rod Martin

David Bird

Harold Dudley

Notice is hereby given that the American Fork City Planning Commission will meet in regular session on October 04, 2023, at the American Fork City Hall, 31 North Church Street commencing at 6:00 PM. The agenda shall be as follows:

1. **Regular Session**
    a. Pledge of Allegiance
    b. Roll Call

2. **Common Consent Agenda** (Common Consent is that class of Commission action that requires no further discussion or which is routine in nature. All items on the Common Consent Agenda are adopted by a single motion unless removed from the Common Consent Agenda).
    a. Approval of the September 06, 2023, Planning Commission minutes
    b. Approval of the September 20, 2023, Planning Commission minutes

3. **Public Hearings** (Public Hearings is that class of Commission action that requires further discussion on General Plan changes, Zone changes, and Code Text Amendments that alter the land use characteristics of American Fork City. Public Hearing items will have the chance for the public to speak upon)
    a. Public hearing, review, and recommendation on a proposed Land Use Map Amendment, known as 96 South Center Street, located at 96 South Center Street, American Fork City, UT 84003. On approximately 0.18 acres, the property proposes to change from the Residential High Density designation to the General Commercial land use designation.
    b. Public hearing, review, and recommendation on a proposed Zone Change, known as 96 South Center Street, located at 96 South Center Street, American Fork City, UT 84003. On approximately 0.18 acres, the property proposes to change from the Residential (R4-7500) zone to the Central Commercial (CC-1) zone.
    c. Public hearing, review, and recommendation on a proposed Land Use Map Amendment, known as Southam Industrial, located at approximately 300 E 1700 S, American Fork City, UT 84003. On approximately 4.99 acres, the property proposes to change from the Shoreline Protection designation to the Design Industrial land use designation.
    d. Public hearing, review, and recommendation on a proposed Zone Change, known as Southam Industrial, located at approximately 300 E 1700 S, American Fork City, UT 84003. On approximately 4.99 acres, the property proposes to change from the Marina (M-1) zone to the Industrial (I-1) zone.

4. **Action Items** (Action Items is that class of Commission action that requires further discussion on Preliminary Plans, Final Plats, and Site Plans that alter the land use characteristics of American Fork City. The Planning Commission will have authority to

approve Preliminary Plans and some Site Plans, depending on the zoning district said Site Plans are in. Final Plats and some Site plans will be recommended by the Planning Commission to the City Council for final action)

a. Review and action on an application for an Accessory Structure, known as Topham Accessory Structure, that is 1000 square feet or greater, located at 185 S 100 W, American Fork City, UT 84003. The Accessory Structure will be on approximately .33 acres and will be in the Residential (R2-7500) Zone.
b. Review and recommendation on an application for an Amended Final Plat, known as Hill-Pryor, located at 63 E 1340 N, American Fork City, UT 84003. The Amended Final Plat will be for approximately 0.48 acres and will be in the Residential (R1-9000) Zone.
c. Review and recommendation on an application for a Final Plat, known as The Flats at Lakeshore Landing Block 2 – Plat D, located at approximately 363 S 890 W, American Fork City, UT 84003. The Final Plat will be for approximately 2.42 acres and will be in the Transit Oriented Development (TOD) Zone.
d. Review and recommendation on an application for a Final Plat, known as The Flats at Lakeshore Landing Block 4 – Plat H, located at approximately 495 S 890 W, American Fork City, UT 84003. The Final Plat will be for approximately 1.87 acres and will be in the Transit Oriented Development (TOD) Zone.
e. Review and action on an application for a Commercial Site Plan, known as Unique Collision Electric Vehicle Installation, located at 221 S 500 E, American Fork City, UT 84003. The Commercial Site Plan will be on approximately 8.04 acres and will be in the General Commercial (GC-1) Zone.

5. **<u>Other Business</u>**
    a. Upcoming Projects

6. **<u>Adjournment</u>**

Dated this 21st day of September 2023

Patrick O'Brien

Development Services Director

**The order of agenda items may change at the discretion of the Planning Commission Chair*

AMERICAN FORK CITY

PLANNING COMMISSION REGULAR SESSION

September 06, 2023

The American Fork City Planning Commission met in a regular session on September 6th, 2023 at the American Fork City Hall, 31 North Church Street, commencing at 6:00 p.m.

Commissioners Present: Christine Anderson, Chris Christiansen, Rodney Martin, Harold Dudley, Bruce Frandsen

Absent: Jenny Peay, David Bird

Staff Present:

Patrick O'Brien	Development Services Director
JJ Hsu	City Engineer
Angie McKee	Administrative Assistant I

Others Present: Roy Bartee, Ken Berg

REGULAR SESSION

Chairwoman Anderson led the "Pledge of Allegiance"

Roll Call

COMMON CONSENT AGENDA

1. **Minutes of the August 16, 2023 Planning Commission Regular Session.**

Rodney Martin motioned to approve the Common Consent agenda.

Bruce Frandsen seconded the motion.

Voting was as follows:

Christine Anderson	**AYE**
Chris Christiansen	**ABSTAIN**
Rodney Martin	**AYE**
Harold Dudley	**AYE**
Bruce Frandsen	**AYE**

The motion passed

PUBLIC HEARINGS

a. **Public hearing, review, and recommendation on a proposed Code Text Amendment, known as Valve Box Detail, of the American Fork City Municipal Code. Combining Section 15.01.1400 Valve Box Detail and 15.01.1405 Secondary Water Valve Box Detail, the Code Text Amendment plans to revise and have one valve box detail for culinary water, pressurized irrigation, and fire lines for American Fork City.**

JJ Hsu reviewed the background information for Public Hearing item letter a: Staff has initiated a Code Text Amendment to amend Section 15.01.1405 of the American Fork City Municipal Code. The proposed amendment looks to revise and have one valve box detail for culinary water, pressurized irrigation, and fire lines for American Fork City.

JJ Hsu: Basically, I compiled one detailed sheet, so it is very easy to use for the future.

Chairwomen Anderson: Great, any questions for engineering? If not, we can move to the motion. This calls for a public hearing. If anyone would like to step forward for the public hearing on this item, you are welcome to do so. Seeing there is no one, we will close public hearing. Thank you.

Public Hearing Opened

No Comments

Public Hearing Closed

Bruce Frandsen moved to recommend approval for the proposed Code Text Amendment, amending Section 15.01.1405, titled Valve Box Detail relating to updating and creating water standard details for American Fork City and providing an effective date for the ordinance.

Harold Dudley seconded the motion.

Voting was as follows:

Christine Anderson	**AYE**
Chris Christiansen	**AYE**
Rodney Martin	**AYE**
Harold Dudley	**AYE**
Bruce Frandsen	**AYE**

The motion passed

ACTION ITEMS

a. **Review and recommendation on an application for a Final Plat, known as The Flats at Lakeshore Landing Block 3 – Plat B, located at approximately 444 South 920 West, American Fork City, UT 84003. The Final Plat will be for approximately 1.56 acres and will be in the Transit Oriented Development (TOD) Zone.**

Patrick O'Brien: reviewed the background information for Action Item letter a: The applicant has applied for a Final Plat to develop apartments. The project looks to provide 75 total units in the area and be four stories in height. The Final Plat shows two (2) parcels in accordance with their lot widths, and they will provide shared parking between the two parcels for the apartment units. The applicant will need to provide and complete the entry numbers for the shared parking documents and reference documents before obtaining signatures for mylar.

Chairwomen Anderson: Great, thank you any questions for planning?

Bruce Frandsen: Yeah, I think we have on this one and a half acres approximately, with 75 dwelling units, correct? How many parking spaces do we have?

Patrick O'Brien: Off the top of my head, I am not too sure. I have to just look back on the plat. Now, it does meet the parking requirements for the development and the applicant does have a shared parking agreement with an adjacent parcel to meet all of the parking needs for the project.

Bruce Frandsen: Yeah, I looked on the plans and I couldn't see it. I think we've got to get a handle on the parking. This has 75 units. I rent out about 15 of them down there. I asked all my people, and every one of them has at least two vehicles. You go down there about seven at night, and it's a one lane road because they have parking on both sides all through that entire development. 75 units on an acre and a half. This is a third of an acre, so we're planning to put 20 on a space as big as this room, and park 40 vehicles. It's not working down there. I would recommend to everybody, in the next couple of weeks, on two or three evenings, to drive down through that place, it's a disaster. 75 units, there are going to be at least 75 vehicles, and probably 150. We just don't have the space. You go down there across the street from the front runner station, now that roads lined with people's camp trailers, semi-trucks parked there all night. Sometimes in the day, side by sides. I mean it's now an RV parking lot across the street on Saturday, right in front of the apartments there. I think we have got to take a look at the long term and find out what you can do now. They probably meet the requirements but bottom line, those requirements are just not working.

Partrick O'Brien: The big issue here is the applicant does meet all the requirements of our code for current parking requirements.

Rodney Martin: How many parking spaces do we have?

Patrick O'Brien: I am not quite sure, but I know it meets the standard.

Bruce Frandsen: Somebody needs to get a grip on this by going down there, knocking on doors, and asking people how many vehicles they have. It's not just cars, camp trailers, horse trailers; it's not how many cars, it's how many parking spots.

Patrick O'Brien: One of the things we have done recently, because you know, it's meant to be transit oriented. The city has gone through and it's now illegal to park in the bike lanes that are down there. It is frustrating as we tried master planning an area that is meant to be multimodal transport related, and everyone wants to use vehicles. We have to try to change the culture.

Bruce Frandsen: We have to live with the culture we have. I mean, it can take you 50 years to change culture to get people to have one vehicle.

Patrick O'Brien: For sure, but if we don't start changing it now, it never does change.

Bruce Frandsen: Do you change the culture? By what? Reducing parking spots and hopefully people will not buy a car?

Patrick O'Brien: You make it more challenging for people to continue to do this. You continue to widen the road, everyone continues to commute. You stop and congestion gets too much, and people start to take alternative modes of transportation. I guess this is probably a discussion for later.

Bruce Frandsen: I understand. I personally don't agree with that, I just think you have to provide for what we're dealing with now.

Harold Dudley: You know Bruce, not to interrupt, and I do think we are kind of off topic, but I do think it is important. When I say I'm a senior member, I'm not trying to be like I'm the oldest and wisest, but I am the senior member on this, and I was here for some of the TOD development, but not all of it. There was a lot of discussion on parking, and a lot of differing opinions on parking. I'm not going to offer opinions other than I do agree with you. I don't live down there, but I've driven down there, and I just want to concur that I agree with you that it is a mess. There was a lot of discussion, and I don't think people went into it blindly, but I do think the goal is not necessarily happening the way people hoped it would.

Chairwomen Anderson: There's a period of growing pains. Ideally, we would all like to have a smaller footprint, but it takes some time and there is this awkward stage in the middle.

Harold Dudley: I appreciate your comments, Bruce, because if we don't discuss this, we don't learn either.

Harold Dudley moved to recommend approval for the proposed Final Plat, located at approximately 444 South 920 West, American Fork City, UT 84003, in the Transit Oriented Development (TOD) Zone, subject to any conditions found in the staff report and recommended by the Fire Marshall.

Chris Christiansen seconded the motion.

Voting was as follows:

Christine Anderson	**AYE**
Chris Christiansen	**AYE**
Rodney Martin	**AYE**
Harold Dudley	**AYE**
Bruce Frandsen	**NAY**

The motion passed

b. **Review and recommendation on an application for a Final Plat, known as The Flats at Lakeshore Landing – Block 3 Plat F, located at approximately 496 South 920 West, American Fork City, UT 84003. The Final Plat will be on approximately 0.94 acres and will be in the Transit Oriented Development (TOD) Zone.**

Patrick O'Brien reviewed the background information for Action Item letter b: The applicant has applied for a Final Plat to develop apartments. The project looks to provide 41 total units in the area and be four stories in height. The Final Plat shows two (2) parcels in accordance with their lot widths, and they will provide shared parking between the two parcels for the apartment units. The applicant will need to provide and complete the entry numbers for the shared parking documents and reference documents before obtaining signatures for mylar.

Chris Christiansen moved to recommend approval for the proposed Final Plat, located at approximately 496 South 920 West, American Fork City, UT 84003, in the Transit Oriented Development (TOD) Zone, subject to any conditions found in the staff report and recommended by the Fire Marshall.

Harold Dudley seconded the motion.

Voting was as follows:

Christine Anderson	**AYE**
Chris Christiansen	**AYE**
Rodney Martin	**AYE**
Harold Dudley	**AYE**
Bruce Frandsen	**NAY**

The motion passed

Chairwomen Anderson: Did you have anything you wanted to add? I should have invited you to come forward if you had anything you wanted to comment on.

Roy Bartee: I'm here just to observe and report.

c. **Review and action on an application for a Preliminary Plan, known as Surg LLC Office Building, located at approximately 1141 E 50 N, American Fork City, UT 84003. The Preliminary Plan will be on approximately 0.60 acres and will be in the PO-1 zone.**

Patrick O'Brien reviewed the background information for Action Item letter c. The applicant has applied for a Final Plat to develop a one (1) Lot Subdivision. The project will be developed under the Surg Medical Plat "A" subdivision. The lot is approximately 0.60 acres in area, and the proposed building will be approximately 4039 square feet. The building will be used for Professional and Medical office space. The building will be two stories and approximately 30 feet in height.

Patrick O'Brien: We can discuss all the next three items. It's the preliminary plan, final plat, and commercial site plan. The applicant couldn't make it tonight, because as you probably noticed, we amended the agenda yesterday evening to try and get this item on close to the last minute. They were happy to have it on, but they couldn't be here. With no major conditions from the staff side, we are happy to recommend approval. I'm happy to answer any questions related to preliminary plan, final plat, or commercial site plan. It is a pretty straightforward small commercial building in our PO-1 zone.

Rodney Martin: I was just at Taylor Drug the other day wondering when they were going to start developing that piece.

Chairwomen Anderson: We will do separate votes for each of these, so we can go ahead with a motion.

Bruce Frandsen moved to recommend approval for the proposed Preliminary Plan, located at 1141 E 50 N, American Fork City, UT 84003, in the PO-1 zone, subject to any conditions found in the staff report and recommended by the Fire Marshall.

Rodney Martin seconded the motion.

Voting was as follows:

Christine Anderson	**AYE**
Chris Christiansen	**AYE**
Rodney Martin	**AYE**
Harold Dudley	**AYE**
Bruce Frandsen	**AYE**

The motion passed

d. Review and recommendation on an application for a Final Plat, known as Surg LLC Office Building, located at approximately 1141 E 50 N, American Fork City, UT 84003. The Final Plat will be on approximately 0.60 acres and will be in the PO-1 zone.

Patrick O'Brien reviewed the background information for Action Item letter d. The applicant has applied for a Final Plat to develop a one (1) Lot Subdivision. The project will be developed under the Surg Medical Plat "A" subdivision. The lot is approximately 0.60 acres in area, and the proposed building will be approximately 4039 square feet. The building will be used for Professional and Medical office space. The building will be two stories and approximately 30 feet in height.

Chris Christiansen moved to recommend approval for the proposed Final Plat, located at 1141 E 50 N, American Fork City, UT 84003, in the PO-1 zone, subject to any conditions found in the staff report and recommended by the Fire Marshall.

Harold Dudley seconded the motion.

Voting was as follows:

Christine Anderson	**AYE**
Chris Christiansen	**AYE**

Rodney Martin	**AYE**
Harold Dudley	**AYE**
Bruce Frandsen	**AYE**

The motion passed

e. **Review and action on an application for a Commercial Site Plan, known as Surg LLC Office Building, located at approximately 1141 E 50 N, American Fork City, UT 84003. The Commercial Site Plan will be on approximately 0.60 acres and will be in the PO-1 zone.**

Patrick O'Brien reviewed the background information for Action Item letter e. The applicant has applied for a Commercial Site Plan to develop an office building. The project will be developed under the Surg Medical Plat "A" subdivision. The lot is approximately 0.60 acres in area, and the proposed building will be approximately 4039 square feet. The building will be used for Professional and Medical office space. The building will be two stories and approximately 30 feet in height.

Rodney Martin Moved to recommend approval for the proposed Commercial Site Plan, located at 1141 E 50 N, American Fork City, UT 84003, in the PO-1 zone, subject to any conditions found in the staff report and recommended by the Fire Marshall.

Chris Christiansen seconded the motion.

Voting was as follows:

Christine Anderson	**AYE**
Chris Christiansen	**AYE**
Rodney Martin	**AYE**
Harold Dudley	**AYE**
Bruce Frandsen	**AYE**

The motion passed

Other Business

Patrick O'Brien discussed the upcoming training that will take place instead of the next planning commission meeting. He told the commissioners they will discuss several different items that night.

Rodney Martin requested an update on getting a few alternate planning commission members.

Adjournment

Harold Dudley motioned to adjourn the meeting.

Chris Christiansen seconded the motion.

Meeting adjourned at 6:26 PM

Angie McKee

Administrative Assistant I

The order of agenda items may change to accommodate the needs of the commissioners, public and staff.

AMERICAN FORK CITY

PLANNING COMMISSION REGULAR SESSION

September 20, 2023

The American Fork City Planning Commission met in a regular session on September 20th, 2023 at the American Fork City Administrative Building Conference Room, 51 East Main Street, commencing at 5:00 p.m.

Commissioners Present: Christine Anderson, Chris Christiansen, Rodney Martin, Harold Dudley, Bruce Frandsen, Jenny Peay, David Bird

Staff Present:

David Bunker	City Administrator
Patrick O'Brien	Development Services Director
Travis Van Ekelenbburg	Senior Planner
Cody Opperman	Planner I
Ben Hunter	City Engineer
JJ Hsu	Project Engineer
Melissa White	Development Services Project Coordinator
Angie McKee	Administrative Assistant I

Others Present: Cherylyn Egner

TRAINING SESSION

Chairperson Anderson welcomed everyone to the meeting.

David Bunker stated his thanks to the Commissioners for their time and dedication to the City of American Fork.

Cherylyn Egner presented the 2023 Planning Commission Training. See Attachment #1.

Patrick O'Brien presented the Development Review Process. See Attachment #2.

Adjournment

Chairperson Anderson asked for a motion to adjourn.

Rodney Martin motioned to adjourn the meeting.

Bruce Frandsen seconded the motion.

Meeting adjourned at 8:00 PM

Melissa White

Development Services Project Coordinator

The order of agenda items may change to accommodate the needs of the commissioners, public and staff.

ATTACHMENT #1

PLANNING COMMISSION TRAINING 2023

September 20, 2023

AMERICAN FORK
18 53

Why are we here?

- Utah Code Ann. 10-9a-302(6)(b) requires four hours of annual land use training as follows:
  - One hour of annual training on general powers and duties under LUDMA; and
  - Three hours of annual training on land use which may include:
    - Appeals variances;
    - Conditional use permits;
    - Exactions;
    - Impact fees;
    - Vested rights;
    - Subdivision regulations and improvement guarantees;
    - Land use referenda;
    - Property rights;
    - Real estate procedures and financing;
    - Zoning, including use-based and form-based; and
    - Drafting ordinances and code that complies with statute

GENERAL POWERS AND DUTIES

- Legislative:
  - Adopt General Plan, ordinances, zone changes, annexations
  - Approved by an adopting ordinance
  - Decision must be “reasonably debatable” or “rational basis”
- Administrative
  - Approve subdivision plat and a site plan
  - Factual findings and legal conclusions must be supported by substantial evidence in the record

Meeting v. Hearing

- Public Meeting:
  - Conduct public business in a transparent manner
- Public Hearing:
  - Hear comment on an application
    - Public Comment and Public Clamor have separate meanings
      - To be considered, reasons offered by public must have factual basis in the record. Davis County v. Clearfield City, 756 P.2d 704, 712 (Utah Ct. App. 1988)

Administrative Decisions

- Inquiry is limited to whether the land use application complies with adopted law and regulations.
- A personal opinion of a staff member, planning commissioner, or city council member is not relevant to whether the land use application complies with the law.
- The opinions voiced by the public at a public hearing are only relevant to the extent they relate to whether the land use application complies with the law.
  - Review for “substantial evidence”
  - Ex parte communications should be avoided

Legislative Decisions

- All viewpoints encouraged.
- Goal is to determine policy, many voices needed.
- "Public clamor doctrine has no application when a legislative body acts in a legislative capacity." Harmon City, Inc. v. Draper City, 2000 UT App 31, ¶ 27, 997 P.2d 321, 328.
- Review for reasonably debatable rational basis.
- Ex parte communication allowed.

LEGISLATIVE UPDATE: -Annexation

- Defines “Rural Real Property” as a group of contiguous tax parcels, or a single tax parcel, that:
  - Are under common ownership;
  - Consist of no less than 1,000 total acres;
  - Are zoned for manufacturing or agricultural purposes; and
  - Do not have a residential unit density greater than one unit per acre.
- Allows an island or peninsula to remain so long as it existed prior and it is being reduced in size
- Clarifies that a protest made by a property owner of rural real property must be located within the propped annexation area
- City Council may reconsider a vote

LEGISLATIVE UPDATE:
-Lot Line

- "Subdivision amendment" does not include a lot line adjustment, between a single lot and an adjoining lot or parcel, even if it alters the outside boundary of the subdivision

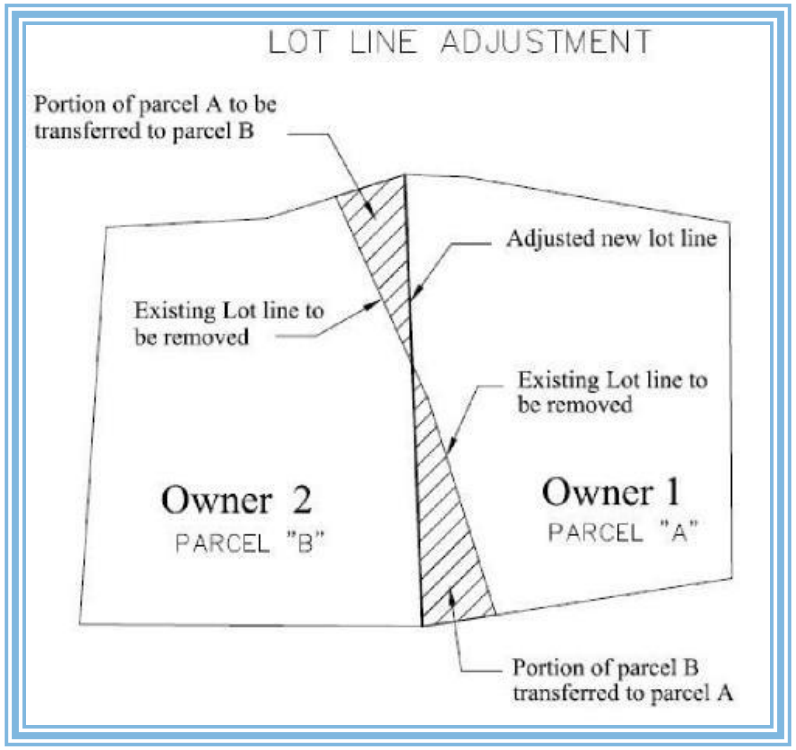

LEGISLATIVE UPDATE:
-Roadway Width

- Residential Roadway means:
  - serves primarily to access adjacent residential areas.
  - is designed to accommodate minimal volumes or vehicular traffic.
  - has a posted speed limit less than or equal to 25 mph.
  - does not have higher traffic volumes from connecting previously separated areas of the road network.
  - Does not abut high traffic volume lots (e.g., schools, rec. centers, sports complexes, or libraries).
  - Primarily serves traffic within a neighborhood.

LEGISLATIVE UPDATE: -Roadway Width

- City may not require installation of pavement on a residential roadway at a width greater than 32 feet, except:
  - Turnarounds
  - Cul-de-sacs
  - Intersections
  - Utility depths
  - Stormwater
  - Planned bike lanes, trails, etc.
- American Fork is already in compliance

LEGISLATIVE UPDATE:
-Development Agreements

- If a development agreement restricts an applicant's rights under clearly established state law, the municipality must disclose the rights being waived in the agreement.
- If those rights are not identified, the affected provisions in the agreement become unenforceable.

LEGISLATIVE UPDATE: -Moratoria

- A temporary land use regulation (moratorium) may not be “stacked” with another or with the “pending ordinance” rule
- If an application was subject to a prior temporary land use regulation it may not be prohibited by another temporary land use regulation.

LEGISLATIVE UPDATE:
-Private Landscaping

- May not require bond or deposit for private landscaping

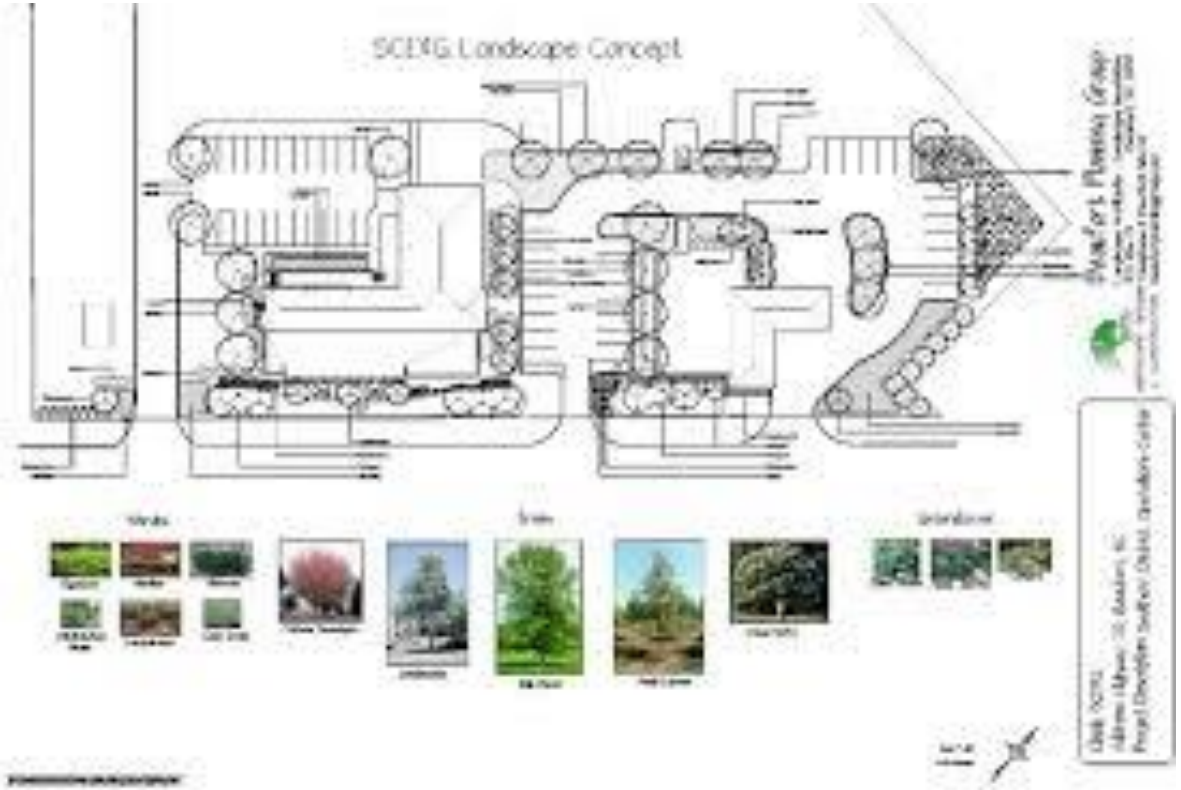

LEGISLATIVE UPDATE: 10-9a-604.1 -Administrative Process

- "Administrative land use authority" does not include a municipal legislative body or a member of a municipal legislative body
- Preapplication meeting within 15 days of request
- Preliminary plat must be reviewed within 15 business days of complete application submission
- ALUA may receive public comment and may conduct one public hearing
- Final plat must be reviewed within 20 business days

LEGISLATIVE UPDATE: 10-9a-604.1 -Review Cycle

- Review Cycle
  - Complete application
  - One review
  - City comments
  - Applicant's re-submission and response
- May have up to four review cycles

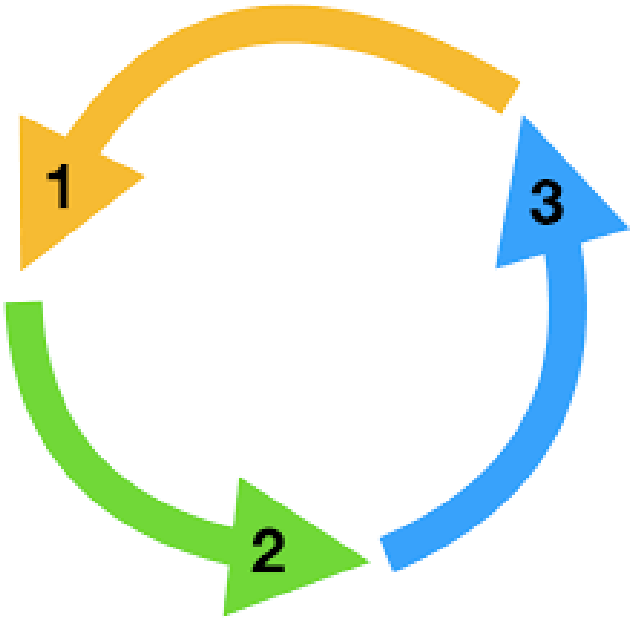

LEGISLATIVE UPDATE -Subdivision Appeals

- If, on the fourth or final review, a municipality fails to respond within 20 business days, the municipality shall, upon request of the property owner, and within 10 business days after the day on which the request is received:
  - for a dispute arising from the subdivision improvement plans, assemble an appeal panel in accordance with Subsection 10-9a-508(5)(d) to review and approve or deny the final revised set of plans; or
  - for a dispute arising from the subdivision ordinance review, advise the applicant, in writing, of the deficiency in the application and of the right to appeal the determination to a designated appeal authority.

LEGISLATIVE UPDATE: -IADU

- Attached garages are part of the primary dwelling for IADUs
- May not regulate/require internal connection between IADU and primary dwelling
- Architectural requirements for IADUs must be consistent with those applied to other single-family dwellings
- May require 1 parking space for an ADU in addition to required spaces for primary dwelling - max. 4 spaces

LEGISLATIVE UPDATE:
-Referendum of Land Use Laws

- "A proposed referendum is **not legally referable** to voters for a municipal land use law, . . . if the land use law was **passed by a unanimous vote** of the local legislative body."

- "Land use law" is a land use regulation, a general plan, a land use development code, an annexation ordinance, the rezoning of a single property or multiple properties, or a comprehensive zoning ordinance

LEGISLATIVE UPDATE:
-Home Ownership

- Prohibits local government from regulating co-owned residences differently from other residences, e.g., corporation, LLC, partnership, or any combination

- HOAs may have rules

ATTACHMENT #2

Phases →

Steps ↓

Conceptual Design

Step 1: Research Site and Environmental Development Constraints and Opportunities

Applicants should research site constraints, opportunities and development requirements.

This is a good point to review development requirements outlined in the American Fork Municipal Code.

Natural Features? A Study may be required if there are streams, ponds, wetlands or other significant natural features on the site and specific protection requirements may apply.

Storm Protection? It's important to understand your project's stormwater detention, water quality, and potential flood protection requirements early in the process.

Compatible Design? How does my project fit into the surrounding area? If you are developing in the CC-1 Central Commercial Zone, you will be required to prepare an Historical Impact Statement outlining how your proposal will fit into the established historical character of downtown.

Transit Oriented Development (TOD): Identify the District, Block Types, and Lot Types that correspond to the site being proposed for development. Identify major thoroughfares and what the internal route network will look like. Some districts also require a mixed-use component depending on the location or district within which the development occurs. This is a good opportunity for applicants to be aware of their development responsibilities.

Step 2: Sign up for Conceptual Review or Preliminary Design Review

Meet with staff to review your proposed concept to prepare for a formal development review submittal (Step 3).

Appointments are available on Mondays, from 10am to 12pm. Each concept plan appointment is 30 minutes, and meetings are held virtually.

How do I sign up? Email Melissa at mwhite@americanfork.gov to find an available appointment time.

Useful Information & Contacts

Applications (for submissions only) - applications@americanfork.gov

Engineering Division - Linda Horton lhorton@americanfork.gov

Fire Marshal - Mat Sacco - msacco@americanfork.gov

Building Division - Angela McKee - amckee@americanfork.gov

Invoicing/Billing - Carolyn Llyod - cllyod@americanfork.gov

Concept Plan Scheduling - Melissa White - mwhite@americanfork.gov

Plan Submission, Staff Review, & Final Action

Step 3: Submit a Completed Application for Formal Staff Review

Applicants should submit a completed application, the appropriate fees, and all of the required plans and associated documents for formal staff review by the Development Review Committee. The Development Review Committee includes staff from the Planning and Zoning Division, Engineering Division, and the Fire Marshal.
The different development and zoning applications are available here, and include a checklist of the required plans and supporting documents for submission. Reviews are not conducted until all required documents have been submitted.

Step 4: Staff Project Review

Before a project moves forward to Planning Commission, staff are required to assess plans and proposals to ensure that they meet the requirements for development as set forth in the American Fork Municipal Code. Planning & Zoning, Fire, and Engineering staff review project plans.

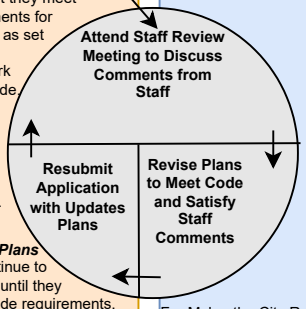

Second Revision of Plans

Staff will continue to review plans until they satisfy the code requirements. An applicant can request to proceed to Planning Commission without addressing all code issues or comments, however, this usually results in a negative recommendation from staff, and can result in a project being tabled by the Planning Commission to go back and address outstanding comments.

Step 5: Notice of Public Hearing/Addition to Planning Commission Agenda

Some items require a statutory notice of public hearing under Utah state Code. Such items generally need to be noticed publicly to have a public hearing, and this must be done at least 10 days in advance of the public hearing. Items that do not require a public hearing can be added to an agenda under a more regular timeframe,

Notices of Public Hearing are sent out by staff to the required parties. Agenda's and Public Notices are posted in conformity with Utah State Code, and can be found at the Agenda Center of amercianfork.gov

Step 6: City Council Final Action

Projects that progress through the Planning Commission with a recommendation will receive a Final Action from the City Council as the approval body.

Final Action in the form of Approval allows an applicant to proceed to the Building Permit stage of the process.

Projects which receive approvals with conditions must satisfy the conditions of the approval before proceeding with the building permit application process.

Plan Finalization, Staff Sign-Off, & Recording of Documents

Step 7: Final Plan Review/Construction Sign-Off

Projects that have been approved with conditions will need to address each item prior to receiving final sign-off from the DRC staff to submit for building Permits

Step 8: Pre-Mylar Review (when necessary)

Staff will inform an applicant when a project is ready for Mylar. Minor corrections for Mylar can be coordinated with staff.

Step 9: Recording of Documents

Once all approvals have been received, and a document has been recommended for recording by staff, all final documents will be recorded by the City as a part of its record keeping protocols.

For Mylar, the City Recorder or their designee will collect all of the required signatures on the Mylar, and will take it to the County for official recording. Staff will inform an applicant when a project is ready for Mylar. Minor corrections for Mylar can be coordinated with staff.

Step 10: Engineering Checklist

The Engineering Division within the Department of Public Works has a number of required checklist items that ordinarily need to be required before submitting an application for building permits. Engineering staff will inform applicants during the plan review process of what is required as a part of the checklist. Further information can be request from engineering@americanfork.gov
The engineering checklist is the last step in the Development Review Process before engaging with the Building Permit Process.

Building Permit Review, Inspections, & Certificate of Occupancy

Step 11: Building Permit Review

This step requires applicants to provide their letter of approval as a part of their application. Failure to do so may result in the rejection or delay of an application.

The Building Division is charged with enforcing the minimum building code requirements within American Fork City. By adhering to these standards, we are safeguarding the health and safety of residents of American Fork, and the general public.

Building Applications are made online through the City portal, accessible through the Building Division on the City website. Applications are managed through the portal, and al correspondence is issued through the users portal account.

Step 12: Building Permit Issuance

Permits are issued electronically through the City's building portal. Applicants are expected to monitor this for updates. When a permit is ready to be issued, an applicant will be notified of what fees need to be paid to receive the permit.

Step 13: Building Inspections

Licensed inspectors from the City must perform a number of specific inspections at various phases to ensure compliance with the building code. This is required to receive final approval. Inspections can be scheduled through the portal, and appointments can be controlled and updated as needed by an applicant.

Step 14: Certificate of Occupancy

A Certificate of Occupancy is a required permit for new buildings prior to them being occupied by anyone. Certificates of Occupancy are issued after all approvals have been received, all required steps completed, and after all required fees have been paid.

AMERICAN FORK

DEVELOPMENT SERVICES

DEVELOPMENT REVIEW PROCESS FLOWCHART 2023

Planning Commission Staff Report
Meeting Date: October 4th, 2023

Agenda Topic

Public hearing, review, and recommendation on a proposed Land Use Map Amendment, known as 96 South Center Street, located at 96 South Center Street, American Fork City, UT 84003. On approximately 0.18 acres, the property proposes to change from the Residential High-Density designation to the General Commercial land use designation.

BACKGROUND INFORMATION		
Location:		96 S Center Street
Project Type:		Land Use Map Amendment
Applicants:		Glenn Livingston
Existing Land Use:		Residential High Density
Proposed Land Use:		General Commercial
Surrounding Land Use:	North	Residential High Density
	South	Residential High Density
	East	Residential High Density
	West	Residential High Density
Existing Zoning:		R4-7500
Proposed Zoning:		CC-1
Surrounding Zoning:	North	CC-1
	South	R4-7500
	East	R4-7500
	West	R4-7500

Background

The applicant has applied for a proposed Land Use Map Amendment. On approximately 0.18 acres, the property proposes to change from the Residential High-Density designation to the General Commercial land use designation. This property is located within the designated Downtown area of American Fork City. The Downtown area of the City is located between 100

E and 100 W, 100 N and 100 S in a squared-out area. The Downtown area can be more easily seen in Section 17.5.133 (E)(1) of the American Fork City Code.

Chapter 17.11 Amendments

This development code, and the zoning map adopted as a part thereof, may be amended from time to time by the city council, but all proposed amendments must first be submitted to the planning commission for its recommendation. The procedure to be followed in amending the code and map shall be as set forth below.

Sec 17.11.101 Written Petition Required - City Initiated Amendments Permitted

Any person seeking an amendment of the development code or zoning map shall submit to the planning commission a written petition designating the change desired and the reasons therefor, and shall pay a nonrefundable filing fee in an amount established by resolution of the city council. Amendments to the code and map may also be initiated by action of the planning commission or upon request of the city council.

Sec 17.11.102 Planning Commission To Make Recommendations

Upon receipt of the petition the planning commission shall consider the request and, subject to completion of a public hearing on the matter before the planning commission with public notice given in accordance with the provisions of Section 17.11.103, shall submit its recommendations with respect thereto to the city council.

Sec 17.11.103 Planning Commission To Conduct Public Hearing Before Recommending Amendments - Notice Of Hearing To Be Provided

1. No ordinance approving an amendment to the official zone map or text of the development code, or approving a large scale development project may be enacted by the city council unless and until a public hearing relating to the proposed ordinance shall have been conducted by the planning commission.
2. Notice of the date, time and place of the first public hearing regarding a proposed amendment to the official zone map, text of the development code or ordinance of approval of a large scale development project shall be given at least 10 calendar days before the public hearing as follows:
    1. Published on the Utah Public Notice Website;

2. Posted in at least three public locations within the city, or on the city's official website; and
3. Mailed to each affected entity.

Sec 17.11.104 Amendments To Be Adopted By Council - Notice Required

1. The city council, at a public meeting called for the purpose, shall consider each proposed amendment to the official zone map, text of the development code, or ordinance of approval for a large scale development recommended to it by the planning commission and may act to adopt or reject the amendment or ordinance of approval as recommended by the planning commission or adopt the amendment after making any revision the city council considers appropriate.
2. Notice of the public meeting at which the city council will consider a proposed amendment or ordinance of approval shall be given at least twenty-four hours before the meeting, which notice shall, as a minimum, be posted in at least three public places within the city; or on the city's official website.

Sec 17.11.105 Amendments To Be Adopted By Ordinance - Public Notice Of Adoption

All amendments to the code and map shall be adopted, published and recorded in accordance with the applicable provisions of UCA 10-3-701 et seq.

17.11.200 Intent With Respect To Amendments

All amendments to this code and zone map shall be made in accordance with the general plan of land use. It is hereby declared to be public policy that this code shall not be amended unless it can be shown that changed or changing conditions make the proposed amendment reasonably necessary to the promotion of the purposes of this code.

Project Conditions of Approval

1. N/A

Findings of Fact

1. The Land Use Map Amendment **MEETS** the requirements of Section 17.11.

Project Map

Standards Conditions of Approval

APPLICANT is responsible and shall submit/post/obtain all necessary documentation and evidence to comply with these Standard Conditions of Approval prior to any platting, permitting, or any other form of authorization by the City including plat recording or other property conveyance to the City and prior to scheduling a pre-construction meeting. All recording shall take place at the Utah County Recorder's Office.

1. **Title Report:** Submit an updated Title Report not older than 30 days or other type of appropriate verification that shows all dedications to the City are free and clear of encumbrances, taxes, or other assessments.

2. **Property Taxes and Liens:** Submit evidence that all the property taxes, for the current and/or previous years, liens, and agricultural land use roll over fees have been paid in full.
3. **Water Rights:** Submit evidence that all the required water rights have been conveyed to American Fork City.
4. **Performance Guarantee:** Post a performance guarantee for all required public and essential common improvements.
5. **Easements and Agreements:** Submit/record a long-term Storm Water Pollution Prevention Maintenance Agreement signed and dated by the property owner and any required easement documentation.
6. **Land Disturbance Permit:** Obtain a Land Disturbance Permit.
7. **Compliance with the Plan Review Comments:** All plans and documents shall comply with all the Technical Review Committee comments and the City Engineer's final review.
8. **Commercial Structure:** Record an Owner Acknowledgment and Utility Liability Indemnification if the proposed building is a multi-unit commercial structure served by a single utility service.
9. **Sensitive Lands:** Record all applicable documents required for compliance with the City's Sensitive Lands Ordinance.
10. **Utility Notification Form:** Submit a Subdivision Utility Notification Form.
11. **Professional Verification:** Submit final stamped construction documentation by all appropriate professionals.
12. **Fees:** Payment of all development, inspection, recording, streetlight, and other project related fees.
13. **Mylar:** Submit a Mylar. All plats will receive final verification of all formats, notes, conveyances, and other items contained on the plat by City staff (recorder, legal, engineer, GIS, planning).

Staff Recommendation

The Land Use Map Amendment meets the requirements of Section 17.11. Staff recommends APPROVING the application.

Potential Motions – LUMA

Approval

Madame Chair, I move to recommend approval for the proposed Land Use Map Amendment, located at 96 S Center Street, American Fork City, UT 84003, from the Residential High-Density designation to the General Commercial designation, subject to any conditions found in the staff report and recommended by the Fire Marshall.

Denial

Madame Chair, I move to recommend denial for the proposed Land Use Map Amendment, located at 96 S Center Street, American Fork City, UT 84003, from the Residential High-Density designation to the General Commercial designation,

Table

Madame Chair, I move to table action for the proposed Zone Change, located at 96 S Center Street, American Fork City, UT 84003, from the Residential High-Density designation to the General Commercial designation, and instruct staff/developer to……..

Planning Commission Staff Report
Meeting Date: October 4th, 2023

Agenda Topic

Public hearing, review, and recommendation on a proposed Zone Change, known as 96 South Center Street, located at 96 South Center Street, American Fork City, UT 84003. On approximately 0.18 acres, the property proposes to change from the Residential (R4-7500) zone to the Central Commercial (CC-1) zone.

BACKGROUND INFORMATION		
Location:		96 S Center Street
Project Type:		Land Use Map Amendment
Applicants:		Glenn Livingston
Existing Land Use:		Residential High Density
Proposed Land Use:		General Commercial
Surrounding Land Use:	North	Residential High Density
	South	Residential High Densit
	East	Residential High Density
	West	Residential High Density
Existing Zoning:		R4-7500
Proposed Zoning:		CC-1
Surrounding Zoning:	North	CC-1
	South	R4-7500
	East	R4-7500
	West	R4-7500

Background

The applicant has applied for a proposed Zone Change. The Zone Change request is to change the property from the R4-7500 zoning designation to the CC-1 zoning designation. The property is approximately 0.18 acres in size and is contiguous to the CC-1 zoning designation. This property is located within the designated Downtown area of American Fork City. The Downtown area of the City is located between 100 E and 100 W, 100 N and 100 S in a squared-out area. The

Downtown area can be more easily seen in Section 17.5.133 (E)(1) of the American Fork City Code.

Chapter 17.11 Amendments

This development code, and the zoning map adopted as a part thereof, may be amended from time to time by the city council, but all proposed amendments must first be submitted to the planning commission for its recommendation. The procedure to be followed in amending the code and map shall be as set forth below.

Sec 17.11.101 Written Petition Required - City Initiated Amendments Permitted

Any person seeking an amendment of the development code or zoning map shall submit to the planning commission a written petition designating the change desired and the reasons therefor, and shall pay a nonrefundable filing fee in an amount established by resolution of the city council.

Amendments to the code and map may also be initiated by action of the planning commission or upon request of the city council.

Sec 17.11.102 Planning Commission To Make Recommendations

Upon receipt of the petition the planning commission shall consider the request and, subject to completion of a public hearing on the matter before the planning commission with public notice given in accordance with the provisions of Section 17.11.103, shall submit its recommendations with respect thereto to the city council.

Sec 17.11.103 Planning Commission To Conduct Public Hearing Before Recommending Amendments - Notice Of Hearing To Be Provided

1. No ordinance approving an amendment to the official zone map or text of the development code, or approving a large scale development project may be enacted by the city council unless and until a public hearing relating to the proposed ordinance shall have been conducted by the planning commission.
2. Notice of the date, time and place of the first public hearing regarding a proposed amendment to the official zone map, text of the development code or ordinance of approval of a large scale development project shall be given at least 10 calendar days before the public hearing as follows:
    1. Published on the Utah Public Notice Website;
    2. Posted in at least three public locations within the city, or on the city's official website; and

3. Mailed to each affected entity.

Sec 17.11.104 Amendments To Be Adopted By Council - Notice Required

1. The city council, at a public meeting called for the purpose, shall consider each proposed amendment to the official zone map, text of the development code, or ordinance of approval for a large scale development recommended to it by the planning commission and may act to adopt or reject the amendment or ordinance of approval as recommended by the planning commission or adopt the amendment after making any revision the city council considers appropriate.
2. Notice of the public meeting at which the city council will consider a proposed amendment or ordinance of approval shall be given at least twenty-four hours before the meeting, which notice shall, as a minimum, be posted in at least three public places within the city; or on the city's official website.

Sec 17.11.105 Amendments To Be Adopted By Ordinance - Public Notice Of Adoption

All amendments to the code and map shall be adopted, published and recorded in accordance with the applicable provisions of UCA 10-3-701 et seq.

17.11.200 Intent With Respect To Amendments

All amendments to this code and zone map shall be made in accordance with the general plan of land use. It is hereby declared to be public policy that this code shall not be amended unless it can be shown that changed or changing conditions make the proposed amendment reasonably necessary to the promotion of the purposes of this code.

Project Conditions of Approval

1. N/A

Findings of Fact

1. The Zone Change **MEETS** the requirements of Section 17.11.

Project Map

Standards Conditions of Approval

APPLICANT is responsible and shall submit/post/obtain all necessary documentation and evidence to comply with these Standard Conditions of Approval prior to any platting, permitting, or any other form of authorization by the City including plat recording or other property conveyance to the City and prior to scheduling a pre-construction meeting. All recording shall take place at the Utah County Recorder's Office.

1. **Title Report:** Submit an updated Title Report not older than 30 days or other type of appropriate verification that shows all dedications to the City are free and clear of encumbrances, taxes, or other assessments.
2. **Property Taxes and Liens:** Submit evidence that all the property taxes, for the current and/or previous years, liens, and agricultural land use roll over fees have been paid in full.

3. **Water Rights:** Submit evidence that all the required water rights have been conveyed to American Fork City.
4. **Performance Guarantee:** Post a performance guarantee for all required public and essential common improvements.
5. **Easements and Agreements:** Submit/record a long-term Storm Water Pollution Prevention Maintenance Agreement signed and dated by the property owner and any required easement documentation.
6. **Land Disturbance Permit:** Obtain a Land Disturbance Permit.
7. **Compliance with the Plan Review Comments:** All plans and documents shall comply with all the Technical Review Committee comments and the City Engineer's final review.
8. **Commercial Structure:** Record an Owner Acknowledgment and Utility Liability Indemnification if the proposed building is a multi-unit commercial structure served by a single utility service.
9. **Sensitive Lands:** Record all applicable documents required for compliance with the City's Sensitive Lands Ordinance.
10. **Utility Notification Form:** Submit a Subdivision Utility Notification Form.
11. **Professional Verification:** Submit final stamped construction documentation by all appropriate professionals.
12. **Fees:** Payment of all development, inspection, recording, streetlight, and other project related fees.
13. **Mylar:** Submit a Mylar. All plats will receive final verification of all formats, notes, conveyances, and other items contained on the plat by City staff (recorder, legal, engineer, GIS, planning).

Staff Recommendation

The Zone Change meets the requirements of Section 17.11. Staff recommends APPROVING the application.

Potential Motions – Zone Change

Approval

Madame Chair, I move to recommend approval for the proposed Zone Change, located at 96 S Center Street, American Fork City, UT 84003, from the R4-7500 zoning designation to the CC-1

zoning designation, subject to any conditions found in the staff report and recommended by the Fire Marshall.

Denial

Madame Chair, I move to recommend denial for the proposed Zone Change, located at 96 S Center Street, American Fork City, UT 84003, from the R4-7500 zoning designation to the CC-1 zoning designation.

Table

Madame Chair, I move to table action for the proposed Zone Change, located at 96 S Center Street, American Fork City, UT 84003, from the R4-7500 zoning designation to the CC-1 zoning designation, and instruct staff/developer to……..

Property is already located in the City's designated Downtown area, as indicated in Section 17.5.133 (E)(1)

Next Step:
Reviewed
Proceed to Planning Commission on October 4th, 2023

American Fork City
Development Review Committee

Planning and Zoning
Reviewed
copperman 09/20/2023

Engineering Division
Reviewed
bhunter 09/21/2023

Property Address: 96 S Center Street
Parcel #: 02:023:0004

Current Zone: R4-7500
Proposed Zone: CC-1

Use: Apartments/High Density Res.

Reason for Proposed Zoning Change

We propose that the properties' zoning be amended to CC-1 to allow the buildout of a third apartment.

We have loved this home, and have loved repairing/improving it so that it can continue to be a great place for people to live and enjoy. It's in a beautiful area in the heart of historic American Fork, with a large front yard on the corner of Center Street and 100 South. This 1903 home is very spacious, and has unfinished attic space large enough to accommodate a ~1300 square foot 2-bedroom apartment. This would make the total square footage roughly 3400 square feet between the three 2-bedroom apartments.

The lot size isn't sufficient to add a third apartment unit under the R4-7500 zone according to municipal code section 17.4.302. Because of the historic construction of the home, its probable that the home has been grandfathered into zoning changes over the years as American Fork has grown around it.

Because of the properties proximity to main street, it does fulfill the requirements to be Zoned CC-1 as it is adjacent to the CC-1 Zoned North County Children's Justice Center at 90 South. The CC-1 zone doesn't have lot size requirements for high-density residential uses, but asks that there be sufficient off-street parking. This property has 3 off-street parking spaces, one for each unit.

We would love to utilize the attic space and provide another apartment to the growing American Fork area, which is becoming increasingly more competitive to rent in. We just recently found new tenants for the existing apartments and sadly had to turn away multiple people who wanted to live here. We take pride in owning this property in American Fork and will continue to maintain it with care.

Thanks, and let me know if there's anything else you need from me,

Glenn Livingston

Planning Commission Staff Report
Meeting Date: October 4th, 2023

Agenda Topic

Public hearing, review, and recommendation on a proposed Land Use Map Amendment, known as Southam Industrial, located at approximately 300 E 1700 S, American Fork City, UT 84003. On approximately 4.99 acres, the property proposes to change from the Shoreline Protection designation to the Design Industrial land use designation.

BACKGROUND INFORMATION		
Location:		300 E 1700 S
Project Type:		Land Use Map Amendment
Applicants:		McKay Winkel
Existing Land Use:		Shoreline Protection
Proposed Land Use:		Design Industrial
Surrounding Land Use:	North	Design Industrial
	South	Shoreline Protection
	East	Shoreline Protection
	West	Shoreline Protection
Existing Zoning:		M-1
Proposed Zoning:		I-1
Surrounding Zoning:	North	PI-1
	South	N/A
	East	I-1
	West	M-1

Background

The applicant has applied for a proposed Land Use Map Amendment. The project looks to change the Land Use Map of the General Plan from Shoreline Protection to Design Industrial.

Chapter 17.11 Amendments

This development code, and the zoning map adopted as a part thereof, may be amended from time to time by the city council, but all proposed amendments must first be submitted to the planning commission for its recommendation. The procedure to be followed in amending the code and map shall be as set forth below.

Sec 17.11.101 Written Petition Required - City Initiated Amendments Permitted

Any person seeking an amendment of the development code or zoning map shall submit to the planning commission a written petition designating the change desired and the reasons therefor, and shall pay a nonrefundable filing fee in an amount established by resolution of the city council. Amendments to the code and map may also be initiated by action of the planning commission or upon request of the city council.

Sec 17.11.102 Planning Commission To Make Recommendations

Upon receipt of the petition the planning commission shall consider the request and, subject to completion of a public hearing on the matter before the planning commission with public notice given in accordance with the provisions of Section 17.11.103, shall submit its recommendations with respect thereto to the city council.

Sec 17.11.103 Planning Commission To Conduct Public Hearing Before Recommending Amendments - Notice Of Hearing To Be Provided

1. No ordinance approving an amendment to the official zone map or text of the development code, or approving a large scale development project may be enacted by the city council unless and until a public hearing relating to the proposed ordinance shall have been conducted by the planning commission.
2. Notice of the date, time and place of the first public hearing regarding a proposed amendment to the official zone map, text of the development code or ordinance of approval of a large scale development project shall be given at least 10 calendar days before the public hearing as follows:
    1. Published on the Utah Public Notice Website;
    2. Posted in at least three public locations within the city, or on the city's official website; and
    3. Mailed to each affected entity.

Sec 17.11.104 Amendments To Be Adopted By Council - Notice Required

1. The city council, at a public meeting called for the purpose, shall consider each proposed amendment to the official zone map, text of the development code, or ordinance of approval for a large scale development recommended to it by the planning commission and may act to adopt or reject the amendment or ordinance of approval as recommended by the planning commission or adopt the amendment after making any revision the city council considers appropriate.
2. Notice of the public meeting at which the city council will consider a proposed amendment or ordinance of approval shall be given at least twenty-four hours before the meeting, which notice shall, as a minimum, be posted in at least three public places within the city; or on the city's official website.

Sec 17.11.105 Amendments To Be Adopted By Ordinance - Public Notice Of Adoption

All amendments to the code and map shall be adopted, published and recorded in accordance with the applicable provisions of UCA 10-3-701 et seq.

17.11.200 Intent With Respect To Amendments

All amendments to this code and zone map shall be made in accordance with the general plan of land use. It is hereby declared to be public policy that this code shall not be amended unless it can be shown that changed or changing conditions make the proposed amendment reasonably necessary to the promotion of the purposes of this code.

Project Conditions of Approval

1. N/A

Findings of Fact

1. The Land Use Map Amendment, does not meet the requirements of Section 17.11.200.

Project Map

Standards Conditions of Approval

APPLICANT is responsible and shall submit/post/obtain all necessary documentation and evidence to comply with these Standard Conditions of Approval prior to any platting, permitting, or any other form of authorization by the City including plat recording or other property conveyance to the City and prior to scheduling a pre-construction meeting. All recording shall take place at the Utah County Recorder's Office.

1. **Title Report:** Submit an updated Title Report not older than 30 days or other type of appropriate verification that shows all dedications to the City are free and clear of encumbrances, taxes, or other assessments.
2. **Property Taxes and Liens:** Submit evidence that all the property taxes, for the current and/or previous years, liens, and agricultural land use roll over fees have been paid in full.
3. **Water Rights:** Submit evidence that all the required water rights have been conveyed to American Fork City.

4. **Performance Guarantee:** Post a performance guarantee for all required public and essential common improvements.
5. **Easements and Agreements:** Submit/record a long-term Storm Water Pollution Prevention Maintenance Agreement signed and dated by the property owner and any required easement documentation.
6. **Land Disturbance Permit:** Obtain a Land Disturbance Permit.
7. **Compliance with the Plan Review Comments:** All plans and documents shall comply with all the Technical Review Committee comments and the City Engineer's final review.
8. **Commercial Structure:** Record an Owner Acknowledgment and Utility Liability Indemnification if the proposed building is a multi-unit commercial structure served by a single utility service.
9. **Sensitive Lands:** Record all applicable documents required for compliance with the City's Sensitive Lands Ordinance.
10. **Utility Notification Form:** Submit a Subdivision Utility Notification Form.
11. **Professional Verification:** Submit final stamped construction documentation by all appropriate professionals.
12. **Fees:** Payment of all development, inspection, recording, streetlight, and other project related fees.
13. **Mylar:** Submit a Mylar. All plats will receive final verification of all formats, notes, conveyances, and other items contained on the plat by City staff (recorder, legal, engineer, GIS, planning).

Potential Motions – LUMA

Approval

Madame Chair, I move to recommend approval for the proposed Land Use Map Amendment, located at approximately 300 E 1700 S, American Fork City, UT 84003, from the Shoreline Protection Land Use designation to the Design Industrial Land Use designation, subject to any conditions found in the staff report and recommended by the Fire Marshall.

Denial

Madame Chair, I move to recommend denial for the proposed Land Use Map Amendment, located at approximately 300 E 1700 S, American Fork City, UT 84003, from the Shoreline Protection Land Use designation to the Design Industrial Land Use designation.

Table

Madame Chair, I move to table action for the proposed Land Use Map Amendment, located at approximately 300 E 1700 S, American Fork City, UT 84003, from the Shoreline Protection Land Use designation to the Design Industrial Land Use designation, and instruct staff/developer to……..

Planning Commission Staff Report
Meeting Date: October 4th, 2023

Agenda Topic

Public hearing, review, and recommendation on a proposed Zone Change, known as Southam Industrial, located at approximately 300 E 1700 S, American Fork City, UT 84003. On approximately 4.99 acres, the property proposes to change from the Marina (M-1) zone to the Industrial (I-1) zone.

BACKGROUND INFORMATION		
Location:		300 E 1700 S
Project Type:		Land Use Map Amendment
Applicants:		McKay Winkel
Existing Land Use:		Shoreline Protection
Proposed Land Use:		Design Industrial
Surrounding Land Use:	North	Design Industrial
	South	Shoreline Protection
	East	Shoreline Protection
	West	Shoreline Protection
Existing Zoning:		M-1
Proposed Zoning:		I-1
Surrounding Zoning:	North	PI-1
	South	N/A
	East	I-1
	West	M-1

Background

The applicant has applied for a proposed Zone Change. The project looks to change the Land Use Map in order to change the zoning designation on the property from M-1 to the I-1 zoning designation.

Chapter 17.11 Amendments

This development code, and the zoning map adopted as a part thereof, may be amended from time to time by the city council, but all proposed amendments must first be submitted to the planning commission for its recommendation. The procedure to be followed in amending the code and map shall be as set forth below.

Sec 17.11.101 Written Petition Required - City Initiated Amendments Permitted

Any person seeking an amendment of the development code or zoning map shall submit to the planning commission a written petition designating the change desired and the reasons therefor, and shall pay a nonrefundable filing fee in an amount established by resolution of the city council.

Amendments to the code and map may also be initiated by action of the planning commission or upon request of the city council.

Sec 17.11.102 Planning Commission To Make Recommendations

Upon receipt of the petition the planning commission shall consider the request and, subject to completion of a public hearing on the matter before the planning commission with public notice given in accordance with the provisions of Section 17.11.103, shall submit its recommendations with respect thereto to the city council.

Sec 17.11.103 Planning Commission To Conduct Public Hearing Before Recommending Amendments - Notice Of Hearing To Be Provided

1. No ordinance approving an amendment to the official zone map or text of the development code, or approving a large scale development project may be enacted by the city council unless and until a public hearing relating to the proposed ordinance shall have been conducted by the planning commission.
2. Notice of the date, time and place of the first public hearing regarding a proposed amendment to the official zone map, text of the development code or ordinance of approval of a large scale development project shall be given at least 10 calendar days before the public hearing as follows:
    1. Published on the Utah Public Notice Website;

2. Posted in at least three public locations within the city, or on the city's official website; and
3. Mailed to each affected entity.

Sec 17.11.104 Amendments To Be Adopted By Council - Notice Required

1. The city council, at a public meeting called for the purpose, shall consider each proposed amendment to the official zone map, text of the development code, or ordinance of approval for a large scale development recommended to it by the planning commission and may act to adopt or reject the amendment or ordinance of approval as recommended by the planning commission or adopt the amendment after making any revision the city council considers appropriate.
2. Notice of the public meeting at which the city council will consider a proposed amendment or ordinance of approval shall be given at least twenty-four hours before the meeting, which notice shall, as a minimum, be posted in at least three public places within the city; or on the city's official website.

Sec 17.11.105 Amendments To Be Adopted By Ordinance - Public Notice Of Adoption

All amendments to the code and map shall be adopted, published and recorded in accordance with the applicable provisions of UCA 10-3-701 et seq.

17.11.200 Intent With Respect To Amendments

All amendments to this code and zone map shall be made in accordance with the general plan of land use. It is hereby declared to be public policy that this code shall not be amended unless it can be shown that changed or changing conditions make the proposed amendment reasonably necessary to the promotion of the purposes of this code.

Project Conditions of Approval

1. N/A

Findings of Fact

1. The Zone Change does not meet the requirements of Section 17.11.200.

Project Map

Standards Conditions of Approval

APPLICANT is responsible and shall submit/post/obtain all necessary documentation and evidence to comply with these Standard Conditions of Approval prior to any platting, permitting, or any other form of authorization by the City including plat recording or other property conveyance to the City and prior to scheduling a pre-construction meeting. All recording shall take place at the Utah County Recorder's Office.

1. **Title Report:** Submit an updated Title Report not older than 30 days or other type of appropriate verification that shows all dedications to the City are free and clear of encumbrances, taxes, or other assessments.
2. **Property Taxes and Liens:** Submit evidence that all the property taxes, for the current and/or previous years, liens, and agricultural land use roll over fees have been paid in full.
3. **Water Rights:** Submit evidence that all the required water rights have been conveyed to American Fork City.
4. **Performance Guarantee:** Post a performance guarantee for all required public and essential common improvements.
5. **Easements and Agreements:** Submit/record a long-term Storm Water Pollution Prevention Maintenance Agreement signed and dated by the property owner and any required easement documentation.
6. **Land Disturbance Permit:** Obtain a Land Disturbance Permit.
7. **Compliance with the Plan Review Comments:** All plans and documents shall comply with all the Technical Review Committee comments and the City Engineer's final review.
8. **Commercial Structure:** Record an Owner Acknowledgment and Utility Liability Indemnification if the proposed building is a multi-unit commercial structure served by a single utility service.
9. **Sensitive Lands:** Record all applicable documents required for compliance with the City's Sensitive Lands Ordinance.
10. **Utility Notification Form:** Submit a Subdivision Utility Notification Form.
11. **Professional Verification:** Submit final stamped construction documentation by all appropriate professionals.
12. **Fees:** Payment of all development, inspection, recording, streetlight, and other project related fees.
13. **Mylar:** Submit a Mylar. All plats will receive final verification of all formats, notes, conveyances, and other items contained on the plat by City staff (recorder, legal, engineer, GIS, planning).

Potential Motions – Zone Change

Approval

Madame Chair, I move to recommend approval for the proposed Zoning Map Amendment, located at approximately 300 E 1700 S, American Fork City, UT 84003, from the M-1 (Marina

Zone) to the I-1 (Industrial) zoning designation, subject to any conditions found in the staff report and recommended by the Fire Marshall.

Denial

Madame Chair, I move to recommend denial for the proposed Zoning Map Amendment, located at approximately 300 E 1700 S, American Fork City, UT 84003, from the M-1 (Marina Zone) to the I-1 (Industrial) zoning designation.

Table

Madame Chair, I move to table action for the proposed Zoning Map Amendment, located at approximately 300 E 1700 S, American Fork City, UT 84003, from the M-1 (Marina Zone) to the I-1 (Industrial) zoning designation, and instruct staff/developer to……..

Next Step:
Reviewed
Proceed to Planning Commission on October 4th, 2023

American Fork City
Development Review Committee

Planning and Zoning
Reviewed
tvanekelenburg 09/20/2023

Engineering Division
Reviewed
bhunter 09/21/2023

Letter of Support for Zoning change from Marine to Industrial Zoning

August 30, 2023

Patrick O'Brien, Development Service Director
Planning Department
275 E 200 N
American Fork, UT 84003

Re: Proposed rezone of Parcel 13:078:0103 to Industrial Land (I-1)

Dear Director O'Brien,

The purpose of this letter is to inform you and the American Fork Planning Commission of our support for the proposed rezone of Marina (M-1) land to Industrial (I-1) on Parcel 13:078:0103.

Our company, Southam and Associates Inc. (Southam) has been located in American Fork at 572 East 1700 South for several years and has been a respected corporate citizen of Utah County for over 40 years. Along with our family of companies, we employ nearly 300 employees and are a premier provider of metal fabrication and installation along with various wall covering materials to commercial, multi-family, and residential customers throughout the Intermountain West and in at least 16 States.

Our continued growth and long-term viability are dependent on us having a supportive community, responsive government and land use practices that allow us to operate a light metal manufacturing and installation business. There is currently an opportunity to solidify our long-term citizenship in American Fork City through the continued occupation of our current location and the expansion onto a parcel nearby. The parcel in question is currently zoned Marina and is being considered for a rezone request for Industrial use. Southam supports the rezone request and intends to occupy the parcel for expansion for our industrial use, which will consist primarily of construction material lay-down and short-term staging and storage of building materials and equipment.

Southam has enjoyed a productive long-term relationship with American Fork City but is at a crossroads with our growth and ability to operate in the city. As you are well aware, Industrial zoned available land is in short supply. If Southam is unable to expand in our current location, we will be forced to seek expansion opportunities elsewhere. This option has always been and will continue to be our least favored alternative.

If a zone change is approved, a slope easement may be required along the east parcel line for the future city trail to be installed on city property directly east of the parcel. Pending confirmation from city attorney's office. Also, due to the floodplain, development may be limited and additional requirements for development may be required.

572 E 1700 S, American Fork, UT 84003
SouthamAndAssociates.com
801.796.1600

We thank you for your time in reading this letter and considering our support for the rezone request and are available to answer any questions you may have or to provide any missing information.

Thank you again for your consideration.

Sincerely,

Michael Sears

Chief Financial Officer
Southam and Associates, Inc.

572 E 1700 S, American Fork, UT 84003
SouthamAndAssociates.com
801.796.1600

Next Step:
Reviewed
Proceed to Planning Commission on October 4th, 2023

F.M. Winkel Family, LLC
3651 N 100 E STE 125
Provo, UT 84604

American Fork City
Development Review Committee

Planning and Zoning
Reviewed
tvanekelenburg 09/20/2023

Engineering Division
Reviewed
bhunter 09/21/2023

August 30, 2023

Regarding Subject Parcel 13:078:0103

Dear American Fork City,

We currently own two properties along this industrial area of 1700 South. We own one property that is leased to Southam and Associates at 572 E 1700 S as well as the subject parcel being considered for a rezone, which is a few parcels directly west of Southam. Southam and Associates is a great tenant and been a contributor to the local economy for many years (Please see their letter of support for more information about them).

We are grateful for the recent infrastructure and access improvements the City has made along 1700 South. This area is a very nice, quiet place for businesses and industrial tenants to enjoy.

The subject parcel used to be part of a larger, 23.7 acre parcel to the west which was zoned M-1. Years ago, a small 5 acre parcel was carved off and sold. Currently about 19 acres remains to the west and is zoned M-1. While we understand the City may want to keep Marina uses in the area to support the Boat Harbor, we hope that can still be achieved on the remaining 19 acres. I'm guessing the boundary between I-1 and M-1 Zoning in that area was intended to be along the larger parcel. If we were to be granted our request for a rezone of the 5 acres, that boundary would be moved a little to the west (not much, because the parcel is so narrow) and would still maintain the intent and goals of the City, keeping the large parcel for M-1 type services. It is challenging to create supportive M-1 uses on this narrow, 5 acre parcel. The I-1 zoning on this 5 acre subject parcel would seem to match the use and size of the several parcels to the east.

Southam and Associates, the business and tenant at our location at 572 E 1700 S, has been exploring expansion with us for years. They are not able to accommodate their growth on their existing location. However, if they could use the land on the subject parcel in addition to their current location, they could remain in American Fork City between the two locations. This would require the rezone of the subject parcel from M-1 to I-1.

Additionally, we intend to take measures to protect the shoreline and cooperate on any public pathways in the area. We recently improved a shoreline trail along the Weber River and granted a public easement along the shore and trail so the public could enjoy it (see attached photo).

Thank you for your consideration. We feel that this rezone is reasonable because

1) the subject parcel is a small, narrow parcel,

2) the goals of the M-1 services in this area can still be maintained,

3) the I-1 uses immediately to the east of the subject parcels are a natural extension,

4) it helps a local business that employs many people remain in the community,

and 5) we will cooperate with the city and protect the shoreline.

Thank you again. Sincerely,

McKay Winkel

Planning Commission Staff Report
Meeting Date: October 4th, 2023

Agenda Topic

Review and action on an application for an Accessory Structure, known as Topham Accessory Structure, that is 1000 square feet or greater, located at 185 S 100 W, American Fork City, UT 84003. The Accessory Structure will be on approximately 0.33 acres and will be in the Residential (R2-7500) Zone.

BACKGROUND INFORMATION		
Location:		185 S 100 W
Project Type:		Accessory Structure
Applicants:		Dorian Topham
Existing Land Use:		Residential Medium Density
Proposed Land Use:		N/A
Surrounding Land Use:	North	Residential Medium Density
	South	Residential Medium Density
	East	Residential Medium Density
	West	Residential Medium Density
Existing Zoning:		R2-7500
Proposed Zoning:		N/A
Surrounding Zoning:	North	R2-7500
	South	R2-7500
	East	R2-7500
	West	R2-7500

Background

The applicant has applied for a site plan to develop a Residential Accessory Structure. The Accessory Structure exceeds the 1000 square foot threshold, requiring the application to be brought to the Planning Commission for their determination. The project looks to build an accessory building that is approximately 1700 square feet and approximately 20 feet in height in the rear yard. The property is zoned R2-7500.

Section 17.5.105 – Area of Accessory Buildings

Accessory buildings shall not be larger than an area two times the size of the footprint (foundation) of the primary structure; or cover more than twenty-five percent of the total rear yard area of a lot, whichever is less. All accessory buildings shall be of a character which is consistent and compatible with the bulk, height, style and construction materials of existing dwellings in the immediate vicinity. There shall be no signage on any portion of the accessory building and the area surrounding the accessory building shall be landscaped. An accessory building containing a building footprint of one thousand square feet or larger shall require approval of the planning commission, subject to the following findings: (1) the accessory building will be incidental to the primary use of the parcel, (2) the applicant has provided adequate assurance that neither the accessory building nor any portion thereof will be used or converted for use as living or sleeping quarters (see Section 17.5.106) or for the conduct of a business (except when located in a commercial zone permitting such activity), and (3) the bulk, height, style and construction material of the accessory structure is compatible with dwellings in the immediate vicinity and will not result in an undue negative impact upon adjacent properties.

Section 17.6.106 – Accessory Building Prohibited as Living Quarters

Living and sleeping quarters shall not be permitted in any accessory building.

Project Conditions of Approval

1. N/A

Findings of Fact

1. The Residential Accessory Structure **DOES NOT** meet the requirements of Section 17.5.105.
    a. The Site Plan is not drawn on a computer and to scale as indicated in the application requirements. We need a more detailed Site Plan to provide the most accurate review for this application as the scanned document does not give us the scale we need for our reviewing software.

Project Map

Standards Conditions of Approval

APPLICANT is responsible and shall submit/post/obtain all necessary documentation and evidence to comply with these Standard Conditions of Approval prior to any platting, permitting, or any other form of authorization by the City including plat recording or other property conveyance to the City and prior to scheduling a pre-construction meeting. All recording shall take place at the Utah County Recorder's Office.

1. **Title Report:** Submit an updated Title Report not older than 30 days or other type of appropriate verification that shows all dedications to the City are free and clear of encumbrances, taxes, or other assessments.
2. **Property Taxes and Liens:** Submit evidence that all the property taxes, for the current and/or previous years, liens, and agricultural land use roll over fees have been paid in full.
3. **Water Rights:** Submit evidence that all the required water rights have been conveyed to American Fork City.
4. **Performance Guarantee:** Post a performance guarantee for all required public and essential common improvements.
5. **Easements and Agreements:** Submit/record a long-term Storm Water Pollution Prevention Maintenance Agreement signed and dated by the property owner and any required easement documentation.
6. **Land Disturbance Permit:** Obtain a Land Disturbance Permit.

7. **Compliance with the Plan Review Comments:** All plans and documents shall comply with all the Technical Review Committee comments and the City Engineer's final review.
8. **Commercial Structure:** Record an Owner Acknowledgment and Utility Liability Indemnification if the proposed building is a multi-unit commercial structure served by a single utility service.
9. **Sensitive Lands:** Record all applicable documents required for compliance with the City's Sensitive Lands Ordinance.
10. **Utility Notification Form:** Submit a Subdivision Utility Notification Form.
11. **Professional Verification:** Submit final stamped construction documentation by all appropriate professionals.
12. **Fees:** Payment of all development, inspection, recording, streetlight, and other project related fees.
13. **Mylar:** Submit a Mylar. All plats will receive final verification of all formats, notes, conveyances, and other items contained on the plat by City staff (recorder, legal, engineer, GIS, planning).

Staff Recommendation

The Residential Accessory Structure **DOES NOT** meet the requirements of Section 17.5.105 and Section 17.5.106. Staff recommends TABLING the application.

Potential Motions – Residential Accessory Structure

Approval

Madame Chair, I move to approve the proposed Residential Accessory Structure that is in excess of 1000 square feet, located at 185 S 100 W, American Fork City, UT 84003, in the R2-7500 zone, subject to any conditions found in the staff report and recommended by the Fire Marshall.

Denial

Madame Chair, I move to deny the proposed Residential Accessory Structure that is in excess of 1000 square feet, located at 185 S 100 W, American Fork City, UT 84003, in the R2-7500 zone.

Table

Madame Chair, I move to table action for the proposed Residential Accessory Structure that is in excess of 1000 square feet, located at 185 S 100 W, American Fork City, UT 84003, in the R2-7500 zone and instruct staff/developer to……..

Dorian Torham
185 S. 100 W

157'

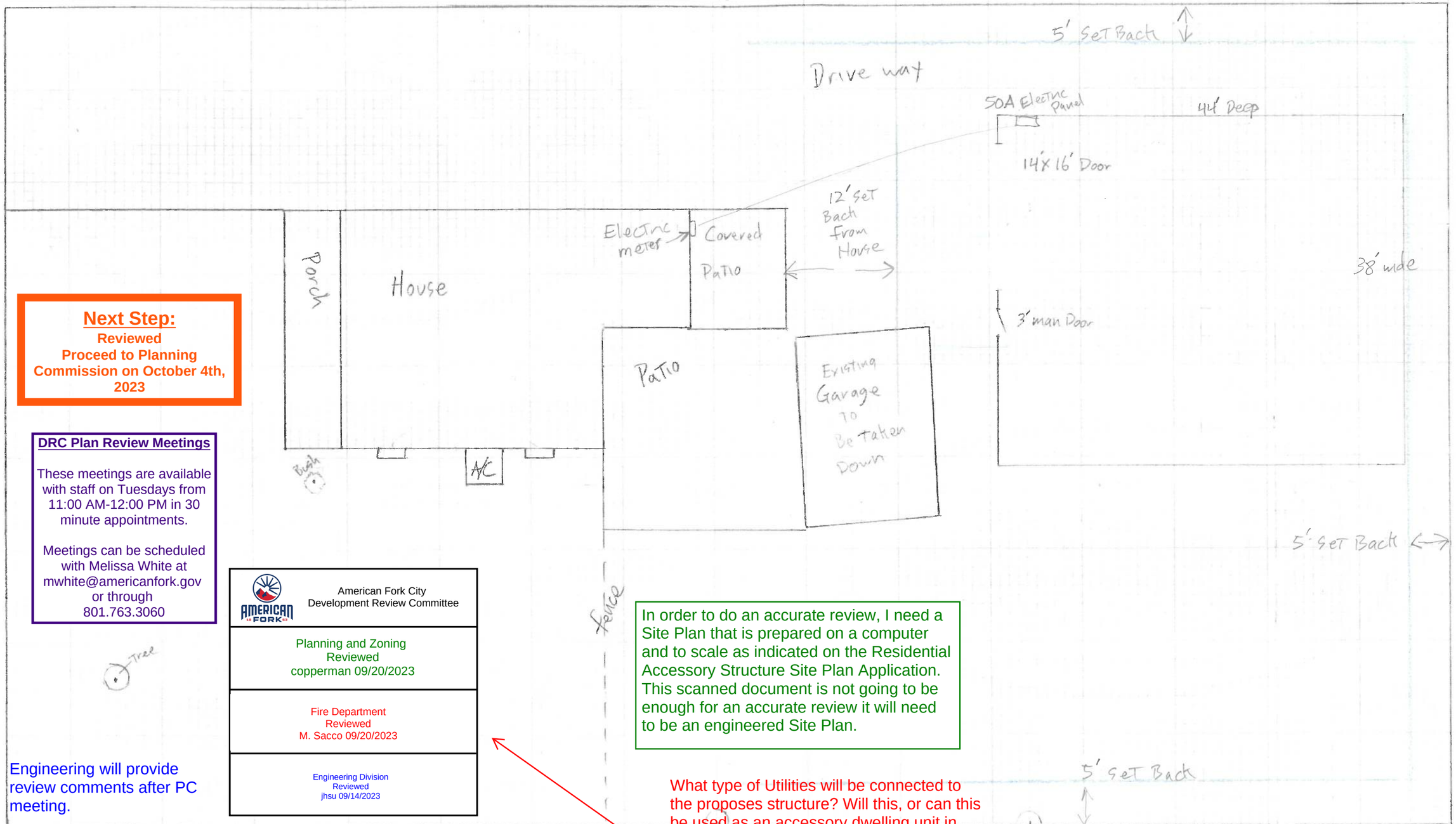

100 W.

Next Step:
Reviewed
Proceed to Planning Commission on October 4th, 2023

DRC Plan Review Meetings

These meetings are available with staff on Tuesdays from 11:00 AM-12:00 PM in 30 minute appointments.

Meetings can be scheduled with Melissa White at mwhite@americanfork.gov or through 801.763.3060

American Fork City
Development Review Committee

Planning and Zoning
Reviewed
copperman 09/20/2023

Fire Department
Reviewed
M. Sacco 09/20/2023

Engineering Division
Reviewed
jhsu 09/14/2023

In order to do an accurate review, I need a Site Plan that is prepared on a computer and to scale as indicated on the Residential Accessory Structure Site Plan Application. This scanned document is not going to be enough for an accurate review it will need to be an engineered Site Plan.

Engineering will provide review comments after PC meeting.

5' PEU around the lot, 10' PEU in the front.

What type of Utilities will be connected to the proposes structure? Will this, or can this be used as an accessory dwelling unit in the future? Engineered drawings should be submitted for us to provide accurate comments to the proposal.

* Drawings of Sprinkler Supply Inc. are being produced for the sole purpose of determining parts and supplies to assist Sprinkler Supply in generating an actual bid or to assist in the actual bid process. The Drawings are not being produced or designed for any other party or purpose, and remain the sole property of Sprinkler Supply. They may not be copied, reproduced, or distributed without permission of Sprinkler Supply Company.

~~Each small square = two feet~~
~~Each large square = 20 feet~~
or
Each small square = one foot
Each large square = 10 feet

Planning Commission Staff Report
Meeting Date: October 4th, 2023

Agenda Topic

Review and recommendation on an application for an Amended Final Plat, known as Hill-Pryor, located at 63 E 1340 N, American Fork City, UT 84003. The Amended Final Plat will be for approximately 0.48 acres and will be in the Residential (R1-9000) Zone.

BACKGROUND INFORMATION		
Location:		63 E 1340 N
Project Type:		Final Plat
Applicants:		Warren Hill
Existing Land Use:		Residential Low Density
Proposed Land Use:		N/A
Surrounding Land Use:	North	Residential Low Density
	South	Residential Low Density
	East	Residential Low Density
	West	Residential Low Density
Existing Zoning:		R1-9000
Proposed Zoning:		N/A
Surrounding Zoning:	North	R1-9000
	South	R1-9000
	East	R1-9000
	West	R1-9000

Background

The applicant has applied for an Amended Final Plat to revise the property line and public utility easement. The subject property is 0.23 acres and is in the R1-9000 zoning designation.

Sec 17.8.216 Amendments

The plans, plats, documents, and statements may be amended by following the same procedure required for initial approval. No change shall be made which is contrary to the intent of the city's land use plan or the standards and requirements of this code. Any amendment of a recorded final plat shall not be approved or recorded except in conformance with the terms and conditions established by state law.

Sec 17.8.217 Amended Plats

When major changes in a plat of a subdivision which has been recorded are made, approval of said subdivision shall be vacated and an amended plat thereof approved and filed in accordance with the requirements of this code. No change shall be made in approved plats unless approval thereof has been obtained by the planning commission and the city council.

Utah State Code 10-9a-608 – Subdivision Amendments

(1) (a) A fee owner of land, as shown on the last county assessment roll, in a subdivision that has been laid out and platted as provided in this part may file a written petition with the land use authority to request a subdivision amendment.

(b) Upon filing a written petition to request a subdivision amendment under Subsection (1)(a), the owner shall prepare and, if approved by the land use authority, record a plat in accordance with Section 10-9a-603 that:

(i) depicts only the portion of the subdivision that is proposed to be amended;

(ii) includes a plat name distinguishing the amended plat from the original plat;

(iii) describes the differences between the amended plat and the original plat; and

(iv) includes references to the original plat.

(c) If a petition is filed under Subsection (1)(a), the land use authority shall provide notice of the petition by mail, email, or other effective means to each affected entity that provides a service to an owner of record of the portion of the plat that is being vacated

or amended at least 10 calendar days before the land use authority may approve the petition for a subdivision amendment.

(d) If a petition is filed under Subsection (1)(a), the land use authority shall hold a public hearing within 45 days after the day on which the petition is filed if:

(i) any owner within the plat notifies the municipality of the owner's objection in writing within 10 days of mailed notification; or

(ii) a public hearing is required because all of the owners in the subdivision have not signed the revised plat.

(e) A land use authority may not approve a petition for a subdivision amendment under this section unless the amendment identifies and preserves any easements owned by a culinary water authority and sanitary sewer authority for existing facilities located within the subdivision.

(2) The public hearing requirement of Subsection (1)(d) does not apply and a land use authority may consider at a public meeting an owner's petition for a subdivision amendment if:

(a) the petition seeks to:

(i) join two or more of the petitioner fee owner's contiguous lots;

(ii) subdivide one or more of the petitioning fee owner's lots, if the subdivision will not result in a violation of a land use ordinance or a development condition;

(iii) adjust the lot lines of adjoining lots or between a lot and an adjoining parcel if the fee owners of each of the adjoining properties join in the petition, regardless of whether the properties are located in the same subdivision;

(iv) on a lot owned by the petitioning fee owner, adjust an internal lot restriction imposed by the local political subdivision; or

(v) alter the plat in a manner that does not change existing boundaries or other attributes of lots within the subdivision that are not:

(A) owned by the petitioner; or

(B) designated as a common area; and

(b) notice has been given to adjoining property owners in accordance with any applicable local ordinance.

(3) A petition under Subsection (1)(a) that contains a request to amend a public street or municipal utility easement is also subject to Section 10-9a-609.5.

(4) A petition under Subsection (1)(a) that contains a request to amend an entire plat or a portion of a plat shall include:

(a) the name and address of each owner of record of the land contained in the entire plat or on that portion of the plat described in the petition; and

(b) the signature of each owner described in Subsection (4)(a) who consents to the petition.

(5) (a) The owners of record of adjoining properties where one or more of the properties is a lot may exchange title to portions of those properties if the exchange of title is approved by the land use authority as a lot line adjustment in accordance with Subsection (5)(b).

(b) The land use authority shall approve a lot line adjustment under Subsection (5)(a) if the exchange of title will not result in a violation of any land use ordinance.

(c) If a lot line adjustment is approved under Subsection (5)(b):

(i) a notice of lot line adjustment approval shall be recorded in the office of the county recorder which:

(A) is approved by the land use authority; and

(B) recites the legal descriptions of both the original properties and the properties resulting from the exchange of title; and

(ii) a document of conveyance shall be recorded in the office of the county recorder.

(d) A notice of approval recorded under this Subsection (5) does not act as a conveyance of title to real property and is not required in order to record a document conveying title to real property.

(6) (a) The name of a recorded subdivision may be changed by recording an amended plat making that change, as provided in this section and subject to Subsection (6)(c).

(b) The surveyor preparing the amended plat shall certify that the surveyor:

(i) holds a license in accordance with Title 58, Chapter 22, Professional Engineers and Professional Land Surveyors Licensing Act;

(ii) (A) has completed a survey of the property described on the plat in accordance with Section 17-23-17 and has verified all measurements; or

(B) has referenced a record of survey map of the existing property boundaries shown on the plat and verified the locations of the boundaries; and

(iii) has placed monuments as represented on the plat.

(c) An owner of land may not submit for recording an amended plat that gives the subdivision described in the amended plat the same name as a subdivision in a plat already recorded in the county recorder's office.

(d) Except as provided in Subsection (6)(a), the recording of a declaration or other document that purports to change the name of a recorded plat is void.

Project Conditions of Approval

1. 3rd party a few minor review comments.
2. Add another note indicating that all existing structures adhere to the R1-9000 Zoning regulations.

Findings of Fact

1. The Amended Final Plat **MEETS** the requirements of Section 17.8.216 and Section 17.8.217.
2. The Amended Final Plat **MEETS** the requirements of Utah State Code 10-9a-608.

Project Map

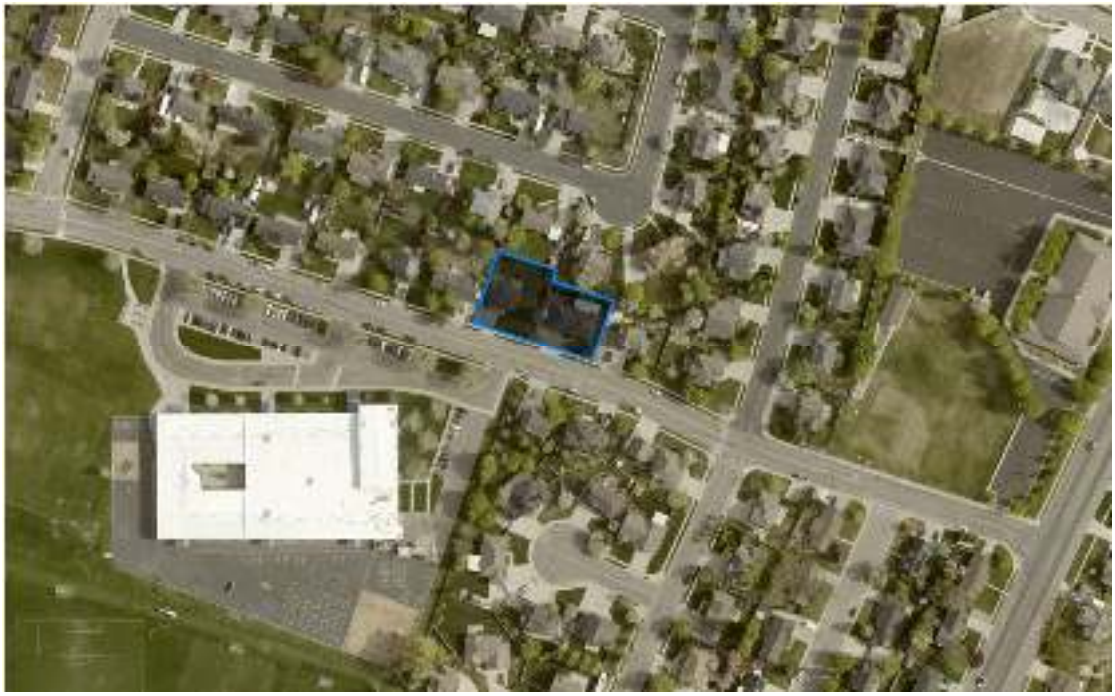

Standards Conditions of Approval

APPLICANT is responsible and shall submit/post/obtain all necessary documentation and evidence to comply with these Standard Conditions of Approval prior to any platting, permitting, or any other form of authorization by the City including plat recording or other property conveyance to the City and prior to scheduling a pre-construction meeting. All recording shall take place at the Utah County Recorder's Office.

1. **Title Report:** Submit an updated Title Report not older than 30 days or other type of appropriate verification that shows all dedications to the City are free and clear of encumbrances, taxes, or other assessments.

2. **Property Taxes and Liens:** Submit evidence that all the property taxes, for the current and/or previous years, liens, and agricultural land use roll over fees have been paid in full.
3. **Water Rights:** Submit evidence that all the required water rights have been conveyed to American Fork City.
4. **Performance Guarantee:** Post a performance guarantee for all required public and essential common improvements.
5. **Easements and Agreements:** Submit/record a long-term Storm Water Pollution Prevention Maintenance Agreement signed and dated by the property owner and any required easement documentation.
6. **Land Disturbance Permit:** Obtain a Land Disturbance Permit.
7. **Compliance with the Plan Review Comments:** All plans and documents shall comply with all the Technical Review Committee comments and the City Engineer's final review.
8. **Commercial Structure:** Record an Owner Acknowledgment and Utility Liability Indemnification if the proposed building is a multi-unit commercial structure served by a single utility service.
9. **Sensitive Lands:** Record all applicable documents required for compliance with the City's Sensitive Lands Ordinance.
10. **Utility Notification Form:** Submit a Subdivision Utility Notification Form.
11. **Professional Verification:** Submit final stamped construction documentation by all appropriate professionals.
12. **Fees:** Payment of all development, inspection, recording, streetlight, and other project related fees.
13. **Mylar:** Submit a Mylar. All plats will receive final verification of all formats, notes, conveyances, and other items contained on the plat by City staff (recorder, legal, engineer, GIS, planning).

Staff Recommendation

The Amended Final Plat meets the requirements of Section 17.8.216, Section 17.8.217, and Utah State Code 10-9a-608. Staff recommends APPROVING the application WITH CONDITIONS.

Potential Motions – Amended Final Plat

Approval

Madame Chair, I move to recommend approval for the proposed Amended Final Plat, located at 63 E 1340 N, American Fork City, UT 84003, in the R1-9000 zoning designation, subject to any conditions found in the staff report and recommended by the Fire Marshall.

Denial

Madame Chair, I move to deny the proposed Amended Final Plat, located at 63 E 1340 N, American Fork City, UT 84003, in the R1-9000 zoning designation.

Table

Madame Chair, I move to table action for the proposed Amended Final Plat, located at 63 E 1340 N, American Fork City, UT 84003, in the R1-9000 zoning designation and instruct staff/developer to……..

A Subdivision in American Fork City

Quail Hollow North Plat "C"

Including a vacation of Lot 18 Plat "A" Quail Hollow North &
Lot 47 Plat "B" Hill Crest Acres East

A Subdivision located in the Northeast 1/4 of Section 11

Township 5 South Range 1 East SLB&M

American Fork City, Utah County, Utah, Zone R1-9000

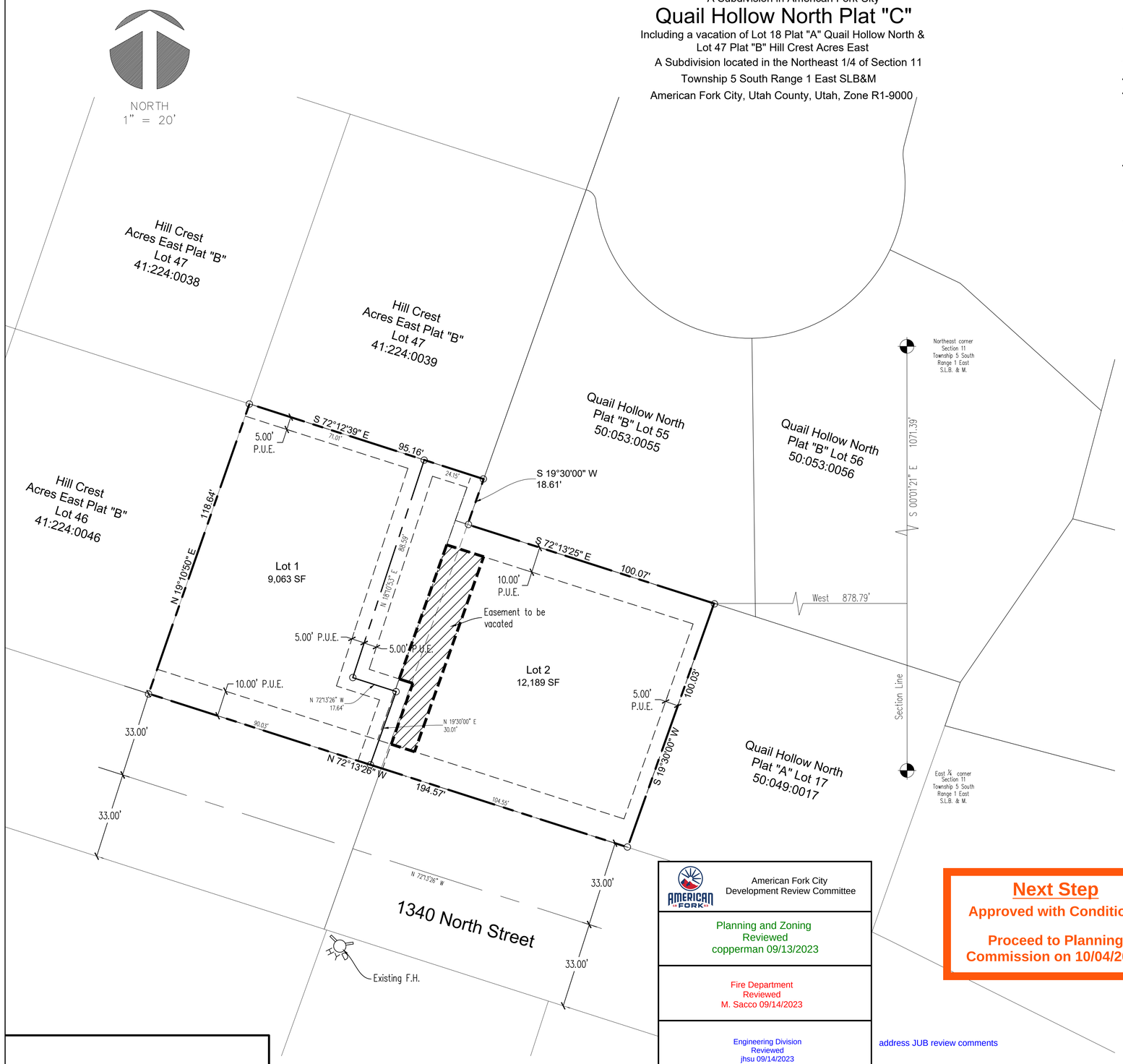

Vicinity Map

Within your notes, provide a note indicating that all existing structures are outside of the new easement locations and adhere to the R1-9000 zoning regulations for the new lot line adjustment.

Notes:
Lowest floor slab elevation must be a minimum of 3 feet above water level measured during Spring Season.

Off-set pins to be placed in the back of the curb and 5/8" by 24" rebar with numbered survey cap to be placed at all lots rear corners prior to occupancy.

Building permits will not be issued for any home until 1) asphalt paving is installed and 2) fire hydrants are installed, approved by the Fire Marshall and charged with culinary water.

No footing, eaves, window wells or other improvements connected to structures are allowed to be placed within Public Utility Easement.

The construction of the project shall conform to the recommendations from the geotechnical report submitted for review and approval.

The contractor is responsible for the removal of collapsible soils within the buildable area, road improvements and underground utilities.

Surveyor's Certificate

I, Roger D. Dudley do hereby certify that I am a Professional Land Surveyor and I hold License #147089 in accordance with Title 58, Chapter 22, of the Professional Engineers and Land Surveyors Licensing Act, Utah Code Annotated 1953 Amended. I further certify that I have completed a survey of the property described hereon in accordance with Section 17-23-17 and have placed monuments as represented hereon.

Boundary Description

Commencing at the Northeast corner of Lot 18, Plat "A", Quail Hollow North Subdivision, American Fork, Utah said point being located South 00°01'21" East along the Section line 1071.39 feet and West 878.79 feet from the Northeast corner of Section 11, Township 5 South, Range 1 East, Salt Lake Base and Meridian; thence South 19°30'00" West 100.03 feet to the Southeast corner of said Lot 18; thence North 72°13'26" West along 1340 North Street 194.57 feet to the Southwest corner of Lot 47, Plat "B", Hill Crest Acres East Subdivision; thence North 19°10'50" East 118.64 feet to the Northwest corner of said Lot 47; thence South 72°12'39" East 95.16 feet to the Northeast corner of said Lot 47; thence South 19°30'00" West 18.61 feet; thence South 72°13'25" East 100.07 feet to the point of beginning.

AREA=21,252 sq. ft. or 0.488 acre

Basis of bearing = South 00°01'21" East along the Section line (NAD 27)

Date

Surveyor
(See Seal Below)

Owner's Dedication

Know all men by these presents that we, all of the undersigned owners of all the property described in the Surveyor's Certificate hereon and shown on this map, have caused the same to be subdivided into Lots, Blocks, Streets, and Easements and do hereby dedicate the streets and other public areas as indicated hereon for perpetual use of the public.

In witness hereof we have hereunto set our hands this _____ day of _____, A.D. 20___.

by: by:

Acknowledgement

STATE OF UTAH }
COUNTY OF UTAH } S.S.

The foregoing instrument was acknowledged before me this_____day of_____, 20___, by _____, who represented that she is the _____ of the _____ and has the authority to execute this instrument.

My Commission Number _____

Signed (a Notary Public Commissioned in Utah)

My Commission Expires _____

Print name of Notary

Acceptance by the City of American Fork

Approved this _____ day of _____, A.D. 20___, by American Fork City, approves this subdivision and hereby accepts the dedication of streets, easements and other parcels of land intended for public purposes for the perpetual use of the public. The city recognizes that this plat clarifies ownership of property with the dedication shown hereon this_____day of _____, A.D. 20___.

APPROVED _____ Mayor

City Council Member

City Council Member

City Council Member

City Council Member

City Council Member

City Council Member

APPROVED _____ CITY ENGINEER

ATTEST_____ AMERICAN FORK CITY RECORDER

Planning Commission Approval

Approved this _____ day of _____ , 20___, by the American Fork City Planning Commission.

Planner

Chairman, Planning Commission

American Fork City
Development Review Committee

Planning and Zoning
Reviewed
copperman 09/13/2023

Fire Department
Reviewed
M. Sacco 09/14/2023

Engineering Division
Reviewed
jhsu 09/14/2023

address JUB review comments

Next Step
Approved with Conditions

Proceed to Planning Commission on 10/04/2023

Legend

Name	Symbol
SECTION CORNER	
STREET MONUMENT	
PROPERTY CORNER	
STREET LIGHT	
FIRE HYDRANT	
SECTION LINE	
PROPERTY LINE	
EASEMENT LINE	
SETBACK LINE	

GRAPHIC SCALE

20 0 10 20 40 80

(IN FEET)
1 inch = 20 ft.

Zone
R1-9000

Fema Flood Plane Info
Zone X
Panel # 49049C0169F
June 19, 2020

Sewer & Water Authority
AF Public Works

Approved Date

SURVEYOR'S SEAL
PROFESSIONAL LAND SURVEYOR
No. 147089
3-17-2023
Roger D. Dudley
STATE OF UTAH

CLERK-RECORDER SEAL

Plat " C "

Quail Hollow North

Including a vacation of Lot 18 Plat "A" Quail Hollow North &
Lot 47 Plat "B" Hill Crest Acres East

American Fork City, Subdivision Utah County, Utah

Scale: 1" = 20 Feet

C - 4.0

Prepared By:
Dudley and Associates, Inc.
353 East 1200 South
Orem, Utah 84058
801-224-1252
Fax 801-224-1264

A Subdivision in American Fork City

Quail Hollow North Plat "C"

Including a vacation of Lot 18 Plat "A" Quail Hollow North &
Lot 47 Plat "B" Hill Crest Acres East

A Subdivision located in the Northeast 1/4 of Section 11

Township 5 South Range 1 East SLB&M

American Fork City, Utah County, Utah, Zone R1-9000

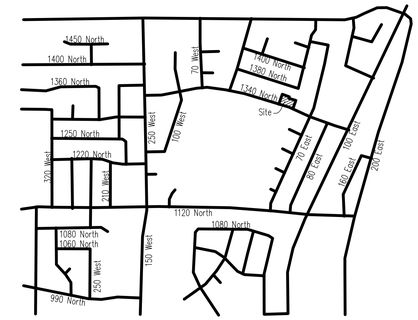

Vicinity Map

Surveyor's Certificate

I, Roger D. Dudley do hereby certify that I am a Professional Land Surveyor and I hold License #147089 in accordance with Title 58, Chapter 22, of the Professional Engineers and Land Surveyors Licensing Act, Utah Code Annotated 1953 Amended. I further certify that I have completed a survey of the property described hereon in accordance with Section 17-23-17 and have placed monuments as represented hereon.

Boundary Description

Commencing at the Northeast corner of Lot 18, Plat "A", Quail Hollow North Subdivision, American Fork, Utah said point being located South 00°01'21" East along the Section line 1071.39 feet and West 878.79 feet from the Northeast corner of Section 11, Township 5 South, Range 1 East, Salt Lake Base and Meridian; thence South 19°30'00" West 100.03 feet to the Southeast corner of said Lot 18; thence North 72°13'26" West along 1340 North Street 194.57 feet to the Southwest corner of Lot 47, Plat "B", Hill Crest Acres East Subdivision; thence North 19°10'50" East 118.64 feet to the Northwest corner of said Lot 47; thence South 72°12'39" East 95.16 feet to the Northeast corner of said Lot 47; thence South 19°30'00" West 18.61 feet; thence South 72°13'25" East 100.07 feet to the point of beginning.

AREA=21,252 sq. ft. or 0.488 acre
Basis of bearing = South 00°01'21" East along the Section line (NAD 27)
Number of Lots Created =2 Lots

Date

Surveyor
(See Seal Below)

Owner's Dedication

Know all men by these presents that we, all of the undersigned owners of all the property described in the Surveyor's Certificate hereon and shown on this map, have caused the same to be subdivided into Lots, Blocks, Streets, and Easements and do hereby dedicate the streets and other public areas as indicated hereon for perpetual use of the public.

In witness hereof we have hereunto set our hands this _____ day of _____, A.D. 20___.

by: Warren J. Hill

by: Michelle M. Hill

by: William Pryor

by: Gabriela Pryor

Acknowledgement

STATE OF UTAH
COUNTY OF UTAH } S.S.

The foregoing instrument was acknowledged before me this_____day of_____, 20____, by ____William Pryor & Gabriela Pryor_____, who represented that they are the ___owners___ of the ____Quail Hollow North "C" Lot 1_____ and have the authority to execute this instrument.

My Commission Number _____

Signed (a Notary Public Commissioned in Utah)

My Commission Expires _____

Print name of Notary

Acknowledgement

STATE OF UTAH
COUNTY OF UTAH } S.S.

The foregoing instrument was acknowledged before me this_____day of_____, 20____, by ____Warren J. Hill & Michelle M. Hill_____, who represented that they are the ___owners___ of the ____Quail Hollow North "C" Lot 2_____ and have the authority to execute this instrument.

My Commission Number _____

Signed (a Notary Public Commissioned in Utah)

My Commission Expires _____

Print name of Notary

Notes:
Lowest floor slab elevation must be a minimum of 3 feet above water level measured during Spring Season.

Off-set pins to be placed in the back of the curb and 5/8" by 24" rebar with numbered survey cap to be placed at all lots rear corners prior to occupancy.

Building permits will not be issued for any home until 1) asphalt paving is installed and 2) fire hydrants are installed, approved by the Fire Marshall and charged with culinary water.

No footing, eaves, window wells or other improvements connected to structures are allowed to be placed within Public Utility Easement.

The construction of the project shall conform to the recommendations from the geotechnical report submitted for review and approval.

The contractor is responsible for the removal of collapsible soils within the buildable area, road improvements and underground utilities.

Pursuant to Section 10-9a-609(2)(b), Utah Code Annotated, 1953, as amended, the previously recorded PUE's upon Lot 18 Plat "A" Quail Hollow North and Lot 47 Plat "B" Hill Crest Acres are vacated and replaced with new PUE's as depicted hereon

All existing structures are outside of the new easement locations and adhere to the R1-9000 zoning regulations for the new lot line adjustment

Acceptance by the City of American Fork

Approved this _____ day of _____, A.D. 20____, by American Fork City, approves this subdivision and hereby accepts the dedication of streets, easements and other parcels of land intended for public purposes for the perpetual use of the public. The city recognizes that this plat clarifies ownership of property with the dedication shown hereon this_____day of _____, A.D. 20____.

APPROVED _____
Mayor

City Council Member

City Council Member

City Council Member

City Council Member

City Council Member

City Council Member

APPROVED _____
CITY ENGINEER

ATTEST_____
AMERICAN FORK CITY RECORDER

Planning Commission Approval

Approved this _____ day of _____ , 20____, by the American Fork City Planning Commission.

Planner

Chairman, Planning Commission

Legend

Name	Symbol
SECTION CORNER	
STREET MONUMENT	
PROPERTY CORNER	
STREET LIGHT	
FIRE HYDRANT	
SECTION LINE	
PROPERTY LINE	
EASEMENT LINE	
SETBACK LINE	

Prepared By:
Dudley and Associates, Inc.
353 East 1200 South
Orem, Utah 84058
801-224-1252
Fax 801-224-1264

GRAPHIC SCALE
20 0 10 20 40 80
(IN FEET)
1 inch = 20 ft.

Zone
R1-9000

Fema Flood Plane Info
Zone X
Panel # 49049C0169F
June 19, 2020

Sewer & Water Authority
AF Public Works

Approved Date

C - 4.0

SURVEYOR'S SEAL
PROFESSIONAL LAND SURVEYOR
No. 147089
3-17-2023
Roger D. Dudley
STATE OF UTAH

CLERK-RECORDER SEAL

Plat " C "

Quail Hollow North

Including a vacation of Lot 18 Plat "A" Quail Hollow North &
Lot 47 Plat "B" Hill Crest Acres East

American Fork City, Subdivision Utah County, Utah

Scale: 1" = 20 Feet

Planning Commission Staff Report
Meeting Date: October 4th, 2023

Agenda Topic

Review and recommendation on an application for a Final Plat, known as The Flats at Lakeshore Landing Block 2 – Plat D, located at approximately 363 S 890 W, American Fork City, UT 84003. The Final Plat will be approximately 2.42 acres and will be in the Transit Oriented Development (TOD) Zone.

BACKGROUND INFORMATION		
Location:		363 S 890 W
Project Type:		Subdivision Final Plat
Applicants:		Roy Bartee
Existing Land Use:		Transit Oriented Development
Proposed Land Use:		N/A
Surrounding Land Use:	North	Transit Oriented Development
	South	Transit Oriented Development
	East	Transit Oriented Development
	West	Transit Oriented Development
Existing Zoning:		TOD
Proposed Zoning:		N/A
Surrounding Zoning:	North	TOD
	South	TOD
	East	TOD
	West	TOD

Background

The applicant is applying for Final Plat approval for Lakeshore Landing's Block 2 Plat D Final Plat, located in the area of 363 S 890 W in the TOD Zone. The proposal consists of a multi-staged development and all development parcels consist of approximately 2.42 acres. The project looks to provide 93 total units in the area and be four stories in height for an apartment complex. The Final Plat shows two (2) parcels in accordance with their lot widths, and they will provide shared parking between the two parcels for the apartment units. The applicant will need to provide and complete the entry numbers for the shared parking documents and reference documents before obtaining signatures for mylar.

Sec 17.7.210 Staff Submits Final Plan/Plat And Supporting Materials To Planning Commission

Upon completion of the technical review conference and subject to a finding that the project materials are in a form suitable for action by the planning commission, the final plans/plats and supporting materials shall be placed on the agenda of the planning commission.

Sec 17.7.211 Planning Commission Acts On Final Plan/Plat And Supporting Materials

When the final plan/plat and supporting materials required for approval have been completed in final form, the plan/plat and supporting materials shall be placed on the agenda of the planning commission and the commission may act to recommend approval of the final plan/plat upon a finding that:

A. The final plan/plat and supporting materials conform with terms of the preliminary approval.
B. The final plan/plat complies with all city requirements and standards relating to large scale developments.
C. The detailed engineering plans and materials comply with the city standards and policies.
D. The estimates of cost of constructing the required improvements are realistic.
E. The water rights conveyance documents have been provided.

Upon a finding of approval, the chairman shall be authorized to sign the final subdivision plats, where applicable.

Project Conditions of Approval

1. Complete all entry numbers for shared parking documents and reference documents before obtaining signatures for mylar.

Findings of Fact

1. The Final Plat **MEETS** the requirements of Section 17.7.210 and 17.7.211.
2. The Final Plat **MEETS** the requirements of Section 17.4.608.

Project Map

Standards Conditions of Approval

APPLICANT is responsible and shall submit/post/obtain all necessary documentation and evidence to comply with these Standard Conditions of Approval prior to any platting, permitting, or any other form of authorization by the City including plat recording or other property conveyance to the City and prior to scheduling a pre-construction meeting. All recording shall take place at the Utah County Recorder's Office.

1. **Title Report:** Submit an updated Title Report not older than 30 days or other type of appropriate verification that shows all dedications to the City are free and clear of encumbrances, taxes, or other assessments.
2. **Property Taxes and Liens:** Submit evidence that all the property taxes, for the current and/or previous years, liens, and agricultural land use roll over fees have been paid in full.
3. **Water Rights:** Submit evidence that all the required water rights have been conveyed to American Fork City.

4. **Performance Guarantee:** Post a performance guarantee for all required public and essential common improvements.
5. **Easements and Agreements:** Submit/record a long-term Storm Water Pollution Prevention Maintenance Agreement signed and dated by the property owner and any required easement documentation.
6. **Land Disturbance Permit:** Obtain a Land Disturbance Permit.
7. **Compliance with the Plan Review Comments:** All plans and documents shall comply with all the Technical Review Committee comments and the City Engineer's final review.
8. **Commercial Structure:** Record an Owner Acknowledgment and Utility Liability Indemnification if the proposed building is a multi-unit commercial structure served by a single utility service.
9. **Sensitive Lands:** Record all applicable documents required for compliance with the City's Sensitive Lands Ordinance.
10. **Utility Notification Form:** Submit a Subdivision Utility Notification Form.
11. **Professional Verification:** Submit final stamped construction documentation by all appropriate professionals.
12. **Fees:** Payment of all development, inspection, recording, streetlight, and other project related fees.
13. **Mylar:** Submit a Mylar. All plats will receive final verification of all formats, notes, conveyances, and other items contained on the plat by City staff (recorder, legal, engineer, GIS, planning).

Staff Recommendation

The Final Plat meets the requirements of Section 17.7.210, Section 17.7.211, and Section 17.4.608. Staff recommends APPROVING the application WITH CONDITIONS.

Potential Motions – Final Plat

Approval

Madame Chair, I move to recommend approval for the proposed Final Plat, located at approximately 363 S 890 W, American Fork City, UT 84003, in the Transit Oriented Development Zone, subject to any conditions found in the staff report and recommended by the Fire Marshall.

Denial

Madame Chair, I move to deny the proposed Final Plat, located at approximately 363 S 890 W, American Fork City, UT 84003, in the Transit Oriented Development Zone.

Table

Madame Chair, I move to table action for the proposed Final Plat, located at 363 S 890 W, American Fork City, UT 84003, in the Transit Oriented Development Zone and instruct staff/developer to……..

LAKESHORE LANDING BLOCK 2 PLAT D

A TRANSIT-ORIENTED DEVELOPMENT
LOCATED IN THE SOUTHWEST QUARTER OF SECTION 22
TOWNSHIP 5 SOUTH, RANGE 1 EAST,
SALT LAKE BASE AND MERIDIAN.
AMERICAN FORK CITY, UTAH COUNTY, UTAH

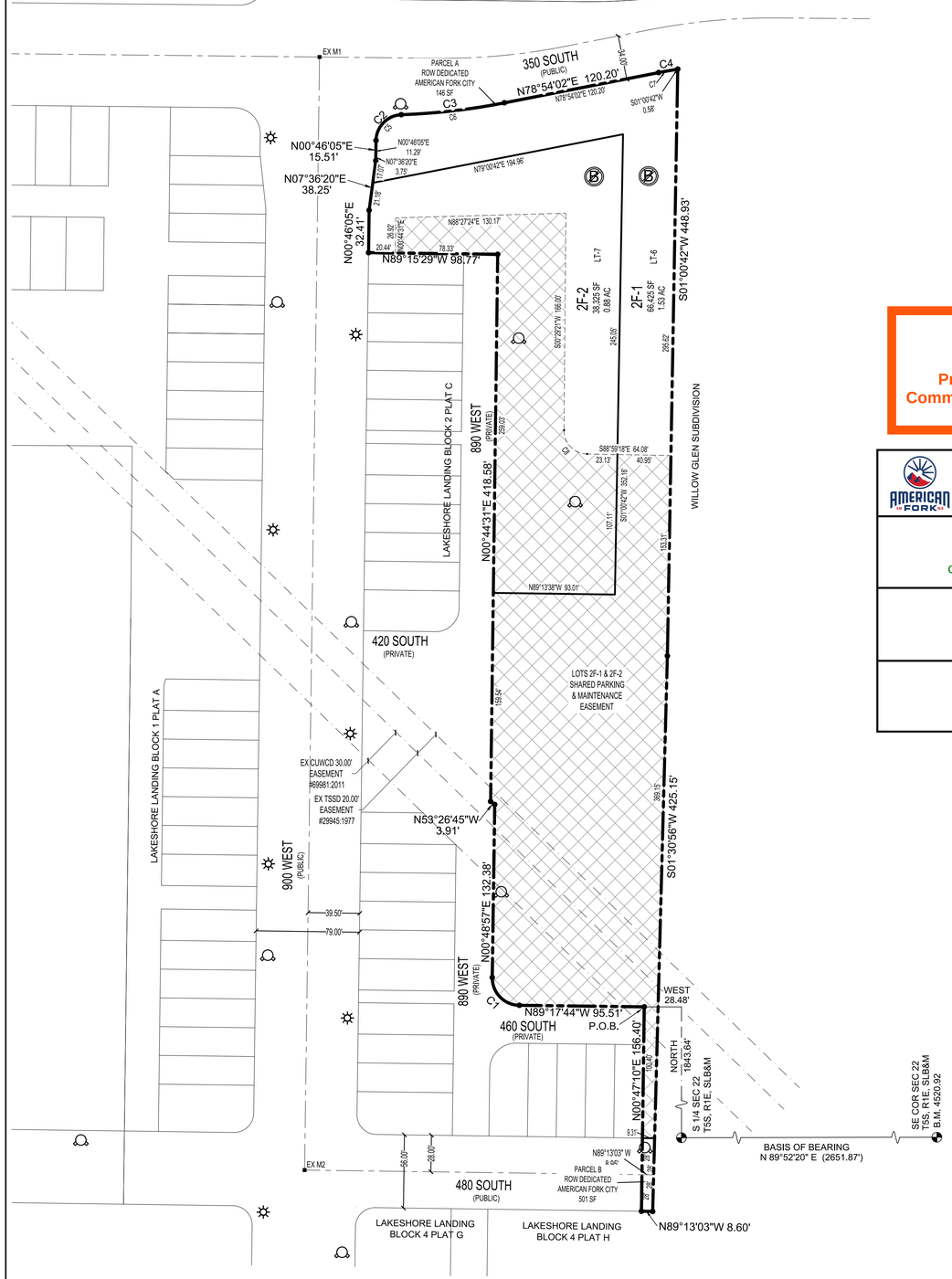

ADDRESSES

LOT 2F-1 & 2F-2	363 SOUTH 890 WEST

LEGEND

- SECTION CORNER
- PROPERTY CORNER
- SUBDIVISION MONUMENT
- BOUNDARY LINE
- CENTER LINE
- EASEMENT LINE
- FIRE HYDRANT
- STREET LIGHT

VICINITY SKETCH

scale 1:1/2 MILE

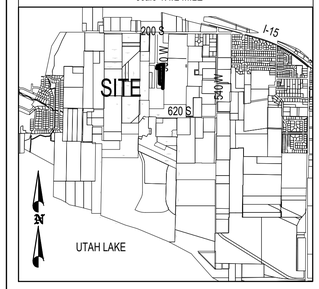

TABULATIONS

DEVELOPMENT AREA	2.42 AC
EXISTING ZONING	BLOCK TYPE 4
LAND USE:	TOD
FLOOD ZONE DESIGNATION:	X
FIRM MAP PANEL #:	49049C0306F
EFFECTIVE DATE:	JUNE 19, 2020

Next Step
Approved
Proceed to Planning Commission on October 4th, 2023

American Fork City
Development Review Committee

Planning and Zoning
Reviewed
copperman 09/19/2023 ← No comments

Fire Department
Reviewed
M. Sacco 09/18/2023

Engineering Division
Reviewed
jhsu 09/18/2023 ← No comments

CURVE TABLE

CURVE	RADIUS	LENGTH	DELTA	CHORD	BEARING
C1	21.00	33.00	90°02'15"	29.71	N44°16'37"W
C2	20.00	30.43	87°10'52"	27.58	N44°21'37"E
C3	503.00	79.47	09°03'09"	79.39	N83°25'35"E
C4	447.00	14.89	01°54'30"	14.89	N79°51'16"E
C5	20.00	30.43	87°11'04"	27.58	N44°21'37"E
C6	503.00	79.47	09°03'08"	79.39	N83°25'35"E
C7	447.00	14.44	01°51'01"	14.44	N79°49'32"E
C8	18.00	28.17	89°39'29"	25.38	S44°09'33"E

SYMBOLS

NO BASEMENTS ALLOWED
SLAB ON GRADE

50 0 50 100 150

SCALE 1"=50'

SHARED PARKING DOCUMENTS:

SHARED PARKING FACILITIES ARE SUBJECT TO A RECORDED COVENANT SPECIFYING FUNDING, MAINTENANCE, INSURANCE, AND MANAGEMENT.

LOTS 2F-1 & 2F-2
RECORDED IN THE OFFICE OF THE UTAH COUNTY RECORDER AS
ENTRY NO: _____

REFERENCE DOCUMENTS:

NOTICE OF INTEREST, BUILDING REQUIREMENTS, AND ESTABLISHMENT OF RESTRICTIVE COVENANTS

RECORDED IN THE OFFICE OF THE UTAH COUNTY RECORDER AS
ENTRY NO: _____

NOTES

1. OFFSET-PINS TO BE PLACED IN THE BACK OF THE CURB AND 5/8" BY 24" REBAR WITH NUMBERED SURVEY CAP TO BE PLACED AT ALL LOTS REAR CORNERS PRIOR TO OCCUPANCY.

2. BUILDING PERMITS WILL NOT BE ISSUED FOR ANY HOME UNTIL 1) ASPHALT PAVING IS INSTALLED AND 2) FIRE HYDRANTS ARE INSTALLED, APPROVED BY THE FIRE MARSHAL AND CHARGED WITH CULINARY WATER.

3. LOWEST FLOOR SLAB ELEVATION MUST BE A MINIMUM OF 3 FEET ABOVE WATER LEVEL MEASURED DURING SPRING SEASON.

SURVEYOR
ENSIGN
THE STANDARD IN ENGINEERING
SALT LAKE CITY
45 W. 10000 S., Suite 500
Sandy, UT 84070
Phone: 801.255.0529

ENGINEER
berg
CIVIL ENGINEERING
11038 N Highland Blvd Suite 400
Highland UA, 84003
office (801) 492-1277
cell (801) 616-1677

05/30/2023

SEWER & WATER AUTHORITY APPROVAL

APPROVED THIS _____DAY OF _____A.D. 20____,
BY THE WATER AUTHORITY.

_____
SEWER & WATER AUTHORITY

SURVEYOR'S CERTIFICATE

I, _____, DO HEREBY CERTIFY THAT I AM A PROFESSIONAL LAND SURVEYOR, AND THAT I HOLD A LICENSE IN ACCORDANCE WITH TITLE 58, CHAPTER 22, PROFESSIONAL ENGINEERS AND LAND SURVEYORS LICENSING ACT, UTAH CODE ANNOTATED, 1953 AS AMENDED, CERTIFICATE NO. _____. I FURTHER CERTIFY THAT BY AUTHORITY OF THE OWNERS, I HAVE MADE A SURVEY OF THE TRACT OF LAND SHOWN ON THIS PLAT AND DESCRIBED BELOW, HAVE SUBDIVIDED SAID TRACT OF LAND INTO LOTS, STREETS AND EASEMENTS, HAVE COMPLETED A SURVEY OF THE PROPERTY DESCRBED ON THIS PLAT IN ACCORDANCE WITH SECTION 17-23-17, UTAH CODE ANNOTATED, 1953 AS AMENDED, HAVE VERIFIED ALL MEASUREMENTS, AND HAVE PLACED MONUMENTS AS REPRESENTED ON THE PLAT. I FURTHER CERTIFY THAT EVERY EXISTING RIGHT-OF-WAY AND EASEMENT GRANT OF RECORD FOR UNDERGROUND FACILITIES, AS DEFINED IN SECTION 54-8a-2, UTAH CODE ANNOTATED, 1953 AS AMENDED, AND FOR OTHER UTILITY FACILITIES, IS ACCURATELY DESCRIBED ON THIS PLAT, AND THAT THIS PLAT IS TRUE AND CORRECT.

_____ _____
DATE (SEE SEAL BELOW)

BOUNDARY DESCRIPTION

BEGINNING AT A POINT WHICH IS NORTH 1843.64 FEET AND WEST 28.48 FEET FROM THE SOUTH QUARTER CORNER OF SECTION 22, TOWNSHIP 5 SOUTH, RANGE 1 EAST; AND RUNNING:

THENCE NORTH 89°17'44" WEST 95.51 FEET; THENCE ALONG THE ARC OF A 21.00 FOOT RADIUS CURVE TO THE RIGHT A DISTANCE OF 33.00 FEET (CURVE HAVING A CENTRAL ANGLE 90°02'15" AND A LONG CHORD BEARS N44°16'37"W 29.71 FEET); THENCE NORTH 00°46'57" EAST 132.38 FEET; THENCE NORTH 53°26'45" WEST 3.91 FEET; THENCE NORTH 00°44'31" EAST 418.58 FEET; THENCE NORTH 89°15'29" WEST 98.77 FEET; THENCE NORTH 00°46'05" EAST 32.41 FEET; THENCE NORTH 07°36'20" EAST 38.25 FEET; THENCE NORTH 00°46'05" EAST 15.51 FEET; THENCE ALONG THE ARC OF A 20.00 FOOT RADIUS CURVE TO THE RIGHT A DISTANCE OF 30.43 FEET (CURVE HAVING A CENTRAL ANGLE 87°10'52" AND A LONG CHORD BEARS N44°21'37"E 27.58 FEET); THENCE ALONG THE ARC OF A 503.00 FOOT RADIUS CURVE TO THE LEFT A DISTANCE OF 79.47 FEET (CURVE HAVING A CENTRAL ANGLE 09°03'09" AND A LONG CHORD BEARS N83°25'35"E 79.39 FEET); THENCE NORTH 78°54'02" EAST 120.20 FEET; THENCE ALONG THE ARC OF A 447.00 FOOT RADIUS CURVE TO THE RIGHT A DISTANCE OF 14.89 FEET (CURVE HAVING A CENTRAL ANGLE 01°54'30" AND A LONG CHORD BEARS N79°51'16"E 14.89 FEET); THENCE SOUTH 01°00'42" WEST 448.93 FEET; THENCE SOUTH 01°30'56" WEST 425.15 FEET; THENCE NORTH 89°13'03" WEST 8.60 FEET; THENCE NORTH 00°47'10" EAST 156.40 FEET TO THE POINT OF BEGINNING.

THE ABOVE DESCRIBED PARCEL CONTAINS 105,398 SQUARE FEET IN AREA OR 2.42 ACRES.

(NOTE: ALL BEARINGS IN THE ABOVE DESCRIPTION ARE BASED ON THE NAD 27 BEARING OF N 89°52'20" E ALONG THE SECTION LINE FROM THE SOUTH QUARTER CORNER OF SECTION 22, TOWNSHIP 5 SOUTH, RANGE 1 EAST TO THE SOUTHEAST CORNER OF SAID SECTION 22.)

NUMBER OF LOTS	2
NUMBER OF PARCELS	2

OWNER'S DEDICATION

THE UNDERSIGNED OWNERS OF THE PROPERTY DESCRIBED ABOVE AND SHOWN ON THIS PLAT, HAVE CAUSED THE SAME TO BE SUBDIVIDED INTO LOTS, STREETS, AND EASEMENTS AND DO HEREBY DEDICATE ANY PUBLIC STREETS AND OTHER PUBLIC AREAS SHOWN THEREONFOR THE PERPETUAL USE OF THE PUBLIC.

IN WITNESS HEREOF WE HAVE HEREUNTO SET OUR HANDS THIS _____

DAY OF _____, A.D. _____

_____

_____

ACKNOWLEDGMENT

STATE OF UTAH
COUNTY OF UTAH } S.S.
ON THE ___ DAY OF _____, A.D. _____ PERSONALLY APPEARED BEFORE ME _____
_____
WHICH PERSON ACKNOWLEDGED TO ME THAT HE EXECUTED THE FOREGOING DEDICATION
IN HIS RESPECTIVE CAPACITIES ON BEHALF OF _____, IN ACCORDANCE
WITH THE GOVERNING DOCUMENTS OF SUCH COMPANY.

MY COMMISSION EXPIRES _____ _____
NOTARY PUBLIC

ACCEPTANCE BY LEGISLATIVE BODY

THE CITY COUNCIL OF AMERICAN FORK CITY COUNTY OF UTAH, APPROVES THIS SUBDIVISION AND HEREBY ACCEPTS THE DEDICATION OF ALL STREETS AND EASEMENTS FOR THE PERPETUAL USE OF THE PUBLIC THIS _____ DAY OF _____, A.D. ___.

_____ _____
MAYOR CITY COUNCIL MEMBER

_____ _____
CITY COUNCIL MEMBER CITY COUNCIL MEMBER

_____ _____
CITY COUNCIL MEMBER CITY COUNCIL MEMBER

APPROVED _____ ATTEST _____
CITY ENGINEER CLERK-RECORDER

PLANNING COMMISSION APPROVAL

APPROVED THIS _____ DAY OF _____, A.D. _____ BY THE
AMERICAN FORK CITY PLANNING COMMISSION

_____ _____
PLANNER CHAIRMAN, PLANNING COMMISSION

LAKESHORE LANDING BLOCK 2 PLAT D
A TRANSIT-ORIENTED DEVELOPMENT
LOCATED IN THE SOUTHWEST QUARTER OF SECTION 22
TOWNSHIP 5 SOUTH, RANGE 1 EAST,
SALT LAKE BASE AND MERIDIAN.
AMERICAN FORK CITY, UTAH COUNTY, UTAH

SCALE: 1" = 50 FEET

SURVEYOR'S SEAL	NOTARY PUBLIC SEAL	CLERK-RECORDER SEAL

Planning Commission Staff Report
Meeting Date: October 4th, 2023

Agenda Topic

Review and recommendation on an application for a Final Plat, known as The Flats at Lakeshore Landing Block 4 – Plat H, located at approximately 495 S 890 W, American Fork City, UT 84003. The Final Plat will be for approximately 1.87 acres and will be in the Transit Oriented Development (TOD) Zone.

BACKGROUND INFORMATION		
Location:		495 S 890 W
Project Type:		Subdivision Final Plat
Applicants:		Roy Bartee
Existing Land Use:		Transit Oriented Development
Proposed Land Use:		N/A
Surrounding Land Use:	North	Transit Oriented Development
	South	Transit Oriented Development
	East	Transit Oriented Development
	West	Transit Oriented Development
Existing Zoning:		TOD
Proposed Zoning:		N/A
Surrounding Zoning:	North	TOD
	South	TOD
	East	TOD
	West	TOD

Background

The applicant is applying for Final Plat approval for The Flats at Lakeshore Landing Block 4 Plat H Final Plat, located in the area of 495 S 890 W in the TOD Zone. The proposal consists of a multi-staged development. The applicant is requesting a five (5) story building but what is required by the code is four (4) Stories. All development parcels consist of 1.87 acres.

The project looks to provide 111 total units in the area and be four stories in height for an apartment complex. The Final Plat shows two (2) parcels in accordance with their lot widths, and they will provide shared parking between the two parcels for the apartment units. The applicant will need to provide and complete the entry numbers for the shared parking documents and reference documents before obtaining signatures for mylar.

The applicant is requesting a five-story building rather than a four-story building. Section 17.4.608 (Section 6 Lot Plans)(D)(2)(b) states, "lots assembled into one parcel that encompass more than one lot type are assigned the lower of the lot types unless City Council has approved otherwise." As Lot Types 6 and 7 are located throughout the building this would imply that the overall building would be assigned the Lot Type 6 designation unless City Council has approved otherwise. The Lot Type 6 designation would mean that the max height of the development is four-stories as mentioned in Section 17.4.608 (Table 6A – LT-6 Building Form).

If the applicant is approved for the five-stories from the City Council, then the applicant will need to come back and amend their Lot Plan for The Flats at Lakeshore Landing Final Lot Plan – Block 4 Plat H to reflect the five-story iteration.

Sec 17.7.210 Staff Submits Final Plan/Plat And Supporting Materials To Planning Commission

Upon completion of the technical review conference and subject to a finding that the project materials are in a form suitable for action by the planning commission, the final plans/plats and supporting materials shall be placed on the agenda of the planning commission.

Sec 17.7.211 Planning Commission Acts On Final Plan/Plat And Supporting Materials

When the final plan/plat and supporting materials required for approval have been completed in final form, the plan/plat and supporting materials shall be placed on the agenda of the planning commission and the commission may act to recommend approval of the final plan/plat upon a finding that:

A. The final plan/plat and supporting materials conform with terms of the preliminary approval.
B. The final plan/plat complies with all city requirements and standards relating to large scale developments.
C. The detailed engineering plans and materials comply with the city standards and policies.
D. The estimates of cost of constructing the required improvements are realistic.
E. The water rights conveyance documents have been provided.

Upon a finding of approval, the chairman shall be authorized to sign the final subdivision plats, where applicable.

Project Conditions of Approval

1. Complete all entry numbers for shared parking documents and reference documents before obtaining signatures for mylar.

2. If the City Council approves the applicant's request for a five-story building, then the applicant will need to come back and amend their Lot Plan for The Flats at Lakeshore Landing Final Lot Plan – Block 4 Plat H to reflect the five-story iteration.

3. If the City Council does not approve the RCA for a five-story building, then the "Building height only per RCA" would need to be removed from the Final Plat.

4. Address comments from the project engineer doing the review and third-party reviewer.

Findings of Fact

1. The Final Plat **MEETS** the requirements of Section 17.7.210 and 17.7.211.
2. The Final Plat **MEETS** the requirements of Section 17.4.608.
    a. This Final Plat meets the requirements of a four-story building.

Project Map

Standards Conditions of Approval

APPLICANT is responsible and shall submit/post/obtain all necessary documentation and evidence to comply with these Standard Conditions of Approval prior to any platting, permitting, or any other form of authorization by the City including plat recording or other property conveyance to the City and prior to scheduling a pre-construction meeting. All recording shall take place at the Utah County Recorder's Office.

1. **Title Report:** Submit an updated Title Report not older than 30 days or other type of appropriate verification that shows all dedications to the City are free and clear of encumbrances, taxes, or other assessments.
2. **Property Taxes and Liens:** Submit evidence that all the property taxes, for the current and/or previous years, liens, and agricultural land use roll over fees have been paid in full.
3. **Water Rights:** Submit evidence that all the required water rights have been conveyed to American Fork City.
4. **Performance Guarantee:** Post a performance guarantee for all required public and essential common improvements.
5. **Easements and Agreements:** Submit/record a long-term Storm Water Pollution Prevention Maintenance Agreement signed and dated by the property owner and any required easement documentation.
6. **Land Disturbance Permit:** Obtain a Land Disturbance Permit.
7. **Compliance with the Plan Review Comments:** All plans and documents shall comply with all the Technical Review Committee comments and the City Engineer's final review.
8. **Commercial Structure:** Record an Owner Acknowledgment and Utility Liability Indemnification if the proposed building is a multi-unit commercial structure served by a single utility service.
9. **Sensitive Lands:** Record all applicable documents required for compliance with the City's Sensitive Lands Ordinance.
10. **Utility Notification Form:** Submit a Subdivision Utility Notification Form.
11. **Professional Verification:** Submit final stamped construction documentation by all appropriate professionals.
12. **Fees:** Payment of all development, inspection, recording, streetlight, and other project related fees.
13. **Mylar:** Submit a Mylar. All plats will receive final verification of all formats, notes, conveyances, and other items contained on the plat by City staff (recorder, legal, engineer, GIS, planning).

Staff Recommendation

The Final Plat meets the requirements of Section 17.7.210, Section 17.7.211, Section 17.4.608. Staff recommends APPROVING the application WITH CONDITIONS.

POTENTIAL MOTIONS – Final Plat

APPROVAL

Madame Chair, I move that we recommend approval on the Final Plat for Lakeshore Landing's Block 4 Plat H, located in the area of 495 S 890 W in the TOD Zone, subject to any conditions found in the Staff Report.

DENIAL

Madame Chair, I move that we deny the Final Plat for Lakeshore Landing's Block 4 Plat H, located in the area of 495 S 890 W in the TOD Zone.

TABLE

Madame Chair, I move that we table action on the Final Plat for Lakeshore Landing's Block 4 Plat H, located in the area of 495 S 890 W in the TOD Zone, and instruct the developer/staff to _____.

LAKESHORE LANDING BLOCK 4 PLAT H

A TRANSIT-ORIENTED DEVELOPMENT
LOCATED IN THE SOUTHWEST QUARTER OF SECTION 22
TOWNSHIP 5 SOUTH, RANGE 1 EAST,
SALT LAKE BASE AND MERIDIAN.
AMERICAN FORK CITY, UTAH COUNTY, UTAH

ADDRESSES

LOT 4K	495 SOUTH 890 WEST

LEGEND

- SECTION CORNER
- PROPERTY CORNER
- SUBDIVISION MONUMENT
- BOUNDARY LINE
- CENTER LINE
- EASEMENT LINE
- FIRE HYDRANT
- STREET LIGHT

VICINITY SKETCH

scale 1:1/2 MILE

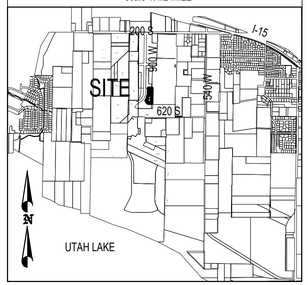

TABULATIONS

DEVELOPMENT AREA	1.87 AC
EXISTING ZONING	BLOCK TYPE 4
LAND USE:	TOD
FLOOD ZONE DESIGNATION:	X
FIRM MAP PANEL #:	49049C0306F
EFFECTIVE DATE:	JUNE 19, 2020

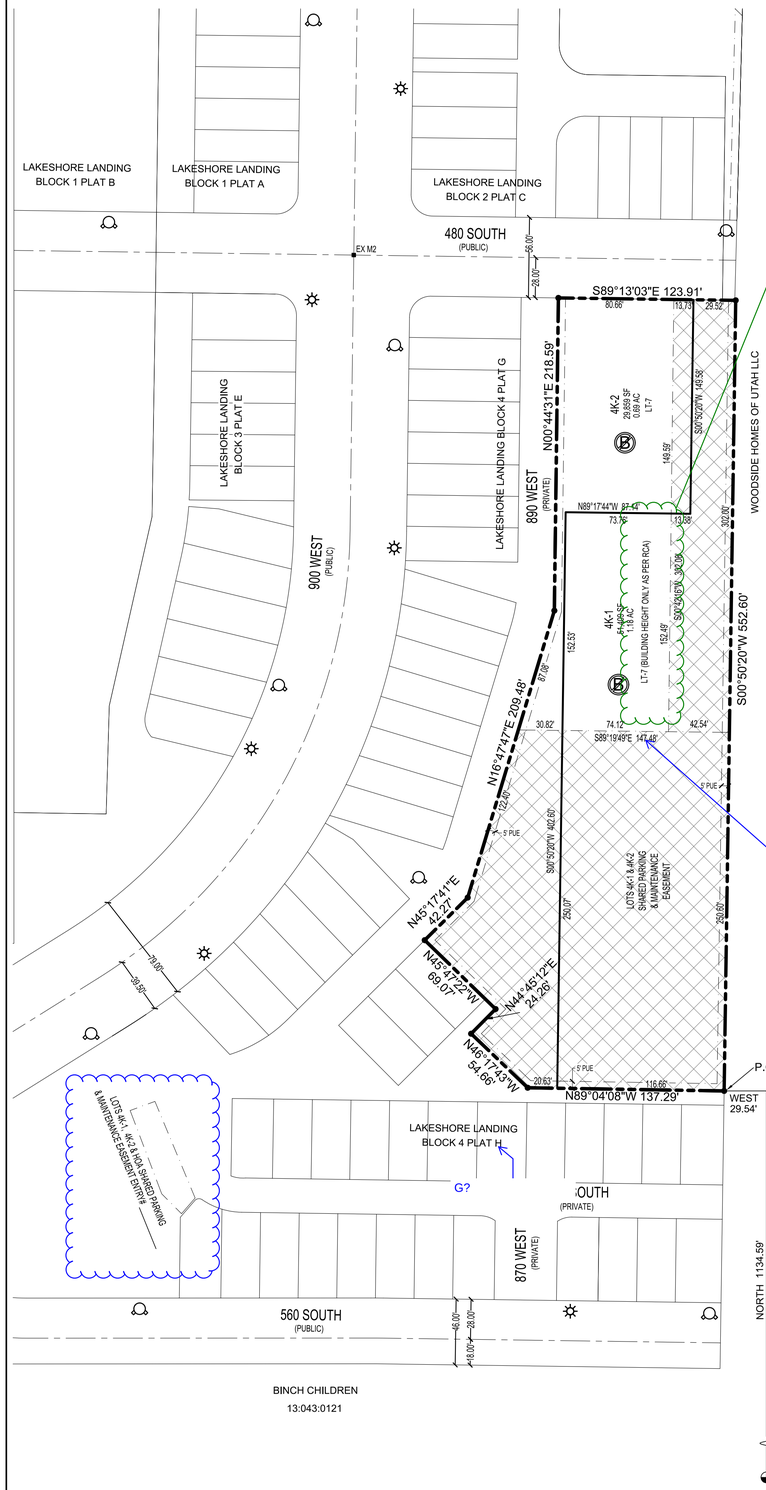

As RCA has not been approved at this time, this height shall be to the Lot Type 6 maximum which is 4 stories tall, as mentioned in Section 17.4.608 (Section 6 Lot Plans)(Table 6A-LT-6 Building Form). As council has not approved this for the Lot Type 7, this will automatically go into Lot Type 6. Section 17.4.608 (Section 6 Lot Plans)(D)(2)(b) states, lots assembled into one parcel that encompass more than one lot type are assigned the lower of the lot types unless City Council has approved otherwise. This was mentioned in the previous submittals.

0136

109.49'?, please confirm

American Fork City
Development Review Committee

Planning and Zoning
Reviewed
copperman 09/06/2023

Conditions on the plan set show the areas that will need to be changed if the City Council does not approve of the RCA for a 5 story building. The "Building height only per RCA" would need to be removed from the Final Plat.

Fire Department
Reviewed
M. Sacco 09/11/2023

No comment

Engineering Division
Reviewed
jhsu 09/06/2023

Complete all entry numbers for shared parking documents and reference documents before obtaining signatures for mylar.

address JUB review comments

Next Step

Approved with Conditions

Proceed to Planning Commission on 10/04/2023

SYMBOLS

NO BASEMENTS ALLOWED
SLAB ON GRADE

50 0 50 100 150
SCALE 1"=50'

SHARED PARKING DOCUMENTS:

SHARED PARKING FACILITIES ARE SUBJECT TO A RECORDED COVENANT SPECIFYING FUNDING, MAINTENANCE, INSURANCE, AND MANAGEMENT.

LOTS 4K-1 & 4K-2
RECORDED IN THE OFFICE OF THE UTAH COUNTY RECORDER AS
ENTRY NO: _____

LOTS 4K-1 & 4K-2 & LAKESHORE LANDING TOWNHOME OWNERS ASSOCIATION
RECORDED IN THE OFFICE OF THE UTAH COUNTY RECORDER AS
ENTRY NO: _____

REFERENCE DOCUMENTS:

NOTICE OF INTEREST, BUILDING REQUIREMENTS, AND ESTABLISHMENT OF RESTRICTIVE COVENANTS

RECORDED IN THE OFFICE OF THE UTAH COUNTY RECORDER AS
ENTRY NO: _____

NOTES

1. OFFSET-PINS TO BE PLACED IN THE BACK OF THE CURB AND 5/8" BY 24" REBAR WITH NUMBERED SURVEY CAP TO BE PLACED AT ALL LOTS REAR CORNERS PRIOR TO OCCUPANCY.
2. BUILDING PERMITS WILL NOT BE ISSUED FOR ANY HOME UNTIL 1) ASPHALT PAVING IS INSTALLED AND 2) FIRE HYDRANTS ARE INSTALLED, APPROVED BY THE FIRE MARSHAL AND CHARGED WITH CULINARY WATER.
3. LOWEST FLOOR SLAB ELEVATION MUST BE A MINIMUM OF 3 FEET ABOVE WATER LEVEL MEASURED DURING SPRING SEASON.

SURVEYOR

ENSIGN
THE STANDARD IN ENGINEERING
SALT LAKE CITY
45 W. 10000 S., Suite 500
Sandy, UT 84070
Phone: 801.255.0529

ENGINEER

berg
CIVIL ENGINEERING
11038 N Highland Blvd Suite 400
Highland UT, 84003
office (801) 492-1277
cell (801) 616-1677

SEWER & WATER AUTHORITY APPROVAL

APPROVED THIS _____DAY OF_____A.D. 20____,
BY THE WATER AUTHORITY.

SEWER & WATER AUTHORITY

SURVEYOR'S CERTIFICATE

I, _____, DO HEREBY CERTIFY THAT I AM A PROFESSIONAL LAND SURVEYOR, AND THAT I HOLD A LICENSE IN ACCORDANCE WITH TITLE 58, CHAPTER 22, PROFESSIONAL ENGINEERS AND LAND SURVEYORS LICENSING ACT, UTAH CODE ANNOTATED, 1953 AS AMENDED, CERTIFICATE NO. _____. I FURTHER CERTIFY THAT BY AUTHORITY OF THE OWNERS, I HAVE MADE A SURVEY OF THE TRACT OF LAND SHOWN ON THIS PLAT AND DESCRIBED BELOW, HAVE SUBDIVIDED SAID TRACT OF LAND INTO LOTS, STREETS AND EASEMENTS, HAVE COMPLETED A SURVEY OF THE PROPERTY DESCRBED ON THIS PLAT IN ACCORDANCE WITH SECTION 17-23-17, UTAH CODE ANNOTATED, 1953 AS AMENDED, HAVE VERIFIED ALL MEASUREMENTS, AND HAVE PLACED MONUMENTS AS REPRESENTED ON THE PLAT. I FURTHER CERTIFY THAT EVERY EXISTING RIGHT-OF-WAY AND EASEMENT GRANT OF RECORD FOR UNDERGROUND FACILITIES, AS DEFINED IN SECTION 54-8a-2, UTAH CODE ANNOTATED, 1953 AS AMENDED, AND FOR OTHER UTILITY FACILITIES, IS ACCURATELY DESCRIBED ON THIS PLAT, AND THAT THIS PLAT IS TRUE AND CORRECT.

DATE _____ (SEE SEAL BELOW)

BOUNDARY DESCRIPTION

BEGINNING AT A POINT WHICH IS NORTH 1134.59 FEET AND WEST 29.54 FEET FROM THE SOUTH QUARTER CORNER OF SECTION 22, TOWNSHIP 5 SOUTH, RANGE 1 EAST; AND RUNNING:

THENCE NORTH 89°04'08" WEST 137.29 FEET; THENCE NORTH 46°17'43" WEST 54.66 FEET; THENCE NORTH 44°45'12" EAST 24.26 FEET; THENCE NORTH 45°47'22" WEST 69.07 FEET; THENCE NORTH 45°17'41" EAST 42.27 FEET; THENCE NORTH 16°47'47" EAST 209.48 FEET; THENCE NORTH 00°44'31" EAST 218.59 FEET; THENCE SOUTH 89°13'03" EAST 123.91 FEET; THENCE SOUTH 00°50'20" WEST 552.60 FEET TO THE POINT OF BEGINNING.

THE ABOVE DESCRIBED PARCEL CONTAINS 81,268 SQUARE FEET IN AREA OR 1.87 ACRES.

(NOTE: ALL BEARINGS IN THE ABOVE DESCRIPTION ARE BASED ON THE NAD 27 BEARING OF N 89°52'20" E ALONG THE SECTION LINE FROM THE SOUTH QUARTER CORNER OF SECTION 22, TOWNSHIP 5 SOUTH, RANGE 1 EAST TO THE SOUTHEAST CORNER OF SAID SECTION 22.)

NUMBER OF LOTS 1

OWNER'S DEDICATION

THE UNDERSIGNED OWNERS OF THE PROPERTY DESCRIBED ABOVE AND SHOWN ON THIS PLAT, HAVE CAUSED THE SAME TO BE SUBDIVIDED INTO LOTS, STREETS, AND EASEMENTS AND DO HEREBY DEDICATE ANY PUBLIC STREETS AND OTHER PUBLIC AREAS SHOWN THEREONFOR THE PERPETUAL USE OF THE PUBLIC.

IN WITNESS HEREOF WE HAVE HEREUNTO SET OUR HANDS THIS _____
DAY OF _____, A.D. _____

ACKNOWLEDGMENT

STATE OF UTAH
COUNTY OF UTAH } S.S.
ON THE ___ DAY OF _____, A.D. _____ PERSONALLY APPEARED BEFORE ME _____

WHICH PERSON ACKNOWLEDGED TO ME THAT HE EXECUTED THE FOREGOING DEDICATION IN HIS RESPECTIVE CAPACITIES ON BEHALF OF _____, IN ACCORDANCE WITH THE GOVERNING DOCUMENTS OF SUCH COMPANY.

MY COMMISSION EXPIRES _____ NOTARY PUBLIC

ACCEPTANCE BY LEGISLATIVE BODY

THE CITY COUNCIL OF AMERICAN FORK CITY COUNTY OF UTAH, APPROVES THIS SUBDIVISION AND HEREBY ACCEPTS THE DEDICATION OF ALL STREETS AND EASEMENTS FOR THE PERPETUAL USE OF THE PUBLIC THIS _____ DAY OF _____, A.D. ___.

MAYOR | CITY COUNCIL MEMBER
CITY COUNCIL MEMBER | CITY COUNCIL MEMBER
CITY COUNCIL MEMBER | CITY COUNCIL MEMBER

APPROVED _____ CITY ENGINEER ATTEST _____ CLERK-RECORDER

PLANNING COMMISSION APPROVAL

APPROVED THIS _____ DAY OF _____, A.D. _____ BY THE
AMERICAN FORK CITY PLANNING COMMISSION

PLANNER | CHAIRMAN, PLANNING COMMISSION

LAKESHORE LANDING BLOCK 4 PLAT H
A TRANSIT-ORIENTED DEVELOPMENT
LOCATED IN THE SOUTHWEST QUARTER OF SECTION 22
TOWNSHIP 5 SOUTH, RANGE 1 EAST,
SALT LAKE BASE AND MERIDIAN.
AMERICAN FORK CITY, UTAH COUNTY, UTAH

SCALE: 1" = 50 FEET

05/30/2023

SURVEYOR'S SEAL	NOTARY PUBLIC SEAL	CLERK-RECORDER SEAL

Planning Commission Staff Report
Meeting Date: October 4th, 2023

Agenda Topic

Review and action on an application for a Commercial Site Plan, known as Unique Collision Electric Vehicle Installation, located at 221 S 500 E, American Fork City, UT 84003. The Commercial Site Plan will be on approximately 8.04 acres and will be in the General Commercial (GC-1) Zone.

BACKGROUND INFORMATION		
Location:		221 S 500 E
Project Type:		Commercial Site Plan
Applicants:		Jeremy Weller
Existing Land Use:		Design Commercial
Proposed Land Use:		N/A
Surrounding Land Use:	North	Design Commercial
	South	Design Commercial
	East	Design Commercial
	West	Design Commercial
Existing Zoning:		GC-1
Proposed Zoning:		N/A
Surrounding Zoning:	North	GC-1
	South	GC-2
	East	SC-1
	West	GC-2

Background

The applicant has applied for a Commercial Site Plan to develop an electric vehicle charging station that will add four (4) charging stalls to the existing site. There are several businesses on the property, so an overall site plan was required for an accurate assessment of the subject property.

Section 17.6.101 – Administrative Site Plan Review

Wherever the terms of this code require submission and approval of a site plan, such review shall be conducted in accordance with the following provisions.

1. Planning commission to approve. The planning commission, acting in an administrative capacity, shall have the function, duty and power to approve or disapprove a project plan and to attach such modifications or conditions as may be deemed appropriate to improve the layout, to ensure that the project will not pose any detrimental effect to persons or property, or to protect the health, safety, and general welfare of the citizens of the city.
2. Application required. Application for site plan approval shall be submitted on forms provided by the city and shall be accompanied by maps and drawings showing the following:
    a. The location of all existing and proposed buildings and structures on the site, with full dimensions showing the distance between buildings and distances from buildings to adjacent property lines.
    b. The location of all parking spaces, driveways, and points of vehicular ingress and egress.
    c. A landscaping plan showing the location, types, and initial sizes of all planting materials to be used together with the location of fences, walls, hedges, and decorative materials.
    d. Preliminary elevations of main buildings showing the general appearance and types of external materials to be used.
    e. The locations of solid waste receptacles and trash pick-up areas.
3. Appeals permitted. Any person aggrieved by a determination of the planning commission may request a hearing before the city council who shall have the authority to reverse, affirm or modify any decision of said commission. Any such appeal shall be filed within ten days of the determination of the planning commission.
4. Issuance of a permit. A building permit shall not be issued for any building or structure or external alterations thereto until the provisions of this section have been complied with. Any construction not in conformance with an approved site plan shall be considered a violation of this code. Any building permit issued shall ensure that development is undertaken and completed in conformity with the plans as approved.
5. Expiration of Site plan approval. A site plan approval issued pursuant to this section shall expire and have no further force or effect if the building, activity, construction, or

occupancy authorized by the approval is not commenced within two (2) years of the date of the approval. Up to a twelve (12) month extension may be approved by the land use authority subject to payment of an extension fee equal to one-half of the current filing fee.

Project Conditions of Approval

1. That the applicant finalizes any comments from staff before any permitting.
2. PUE dedication.

Findings of Fact

1. The Commercial Site Plan **MEETS** the requirements of Section 17.6.101.

Project Map

Standards Conditions of Approval

APPLICANT is responsible and shall submit/post/obtain all necessary documentation and evidence to comply with these Standard Conditions of Approval prior to any platting, permitting, or any other form of authorization by the City including plat recording or other property conveyance to the City and prior to scheduling a pre-construction meeting. All recording shall take place at the Utah County Recorder's Office.

1. **Title Report:** Submit an updated Title Report not older than 30 days or other type of appropriate verification that shows all dedications to the City are free and clear of encumbrances, taxes, or other assessments.
2. **Property Taxes and Liens:** Submit evidence that all the property taxes, for the current and/or previous years, liens, and agricultural land use roll over fees have been paid in full.
3. **Water Rights:** Submit evidence that all the required water rights have been conveyed to American Fork City.
4. **Performance Guarantee:** Post a performance guarantee for all required public and essential common improvements.
5. **Easements and Agreements:** Submit/record a long-term Storm Water Pollution Prevention Maintenance Agreement signed and dated by the property owner and any required easement documentation.
6. **Land Disturbance Permit:** Obtain a Land Disturbance Permit.
7. **Compliance with the Plan Review Comments:** All plans and documents shall comply with all the Technical Review Committee comments and the City Engineer's final review.
8. **Commercial Structure:** Record an Owner Acknowledgment and Utility Liability Indemnification if the proposed building is a multi-unit commercial structure served by a single utility service.
9. **Sensitive Lands:** Record all applicable documents required for compliance with the City's Sensitive Lands Ordinance.
10. **Utility Notification Form:** Submit a Subdivision Utility Notification Form.
11. **Professional Verification:** Submit final stamped construction documentation by all appropriate professionals.
12. **Fees:** Payment of all development, inspection, recording, streetlight, and other project related fees.
13. **Mylar:** Submit a Mylar. All plats will receive final verification of all formats, notes, conveyances, and other items contained on the plat by City staff (recorder, legal, engineer, GIS, planning).

Staff Recommendation

The Commercial Site Plan meets the requirements of Section 17.6.101. Staff recommends APPROVING the application WITH CONDITIONS.

Potential Motions – Commercial Site Plan

Approval

Madame Chair, I move to approve the proposed Commercial Site Plan, located at 221 S 500 E, American Fork City, UT 84003, in the GC-1 zone, subject to any conditions found in the staff report and recommended by the Fire Marshall.

Denial

Madame Chair, I move to deny the proposed Commercial Site Plan, located at 221 S 500 E, American Fork City, UT 84003, in the GC-1 zone.

Table

Madame Chair, I move to table action for the proposed Commercial Site Plan, located at 221 S 500 E, American Fork City, UT 84003, in the GC-1 zone and instruct staff/developer to……..

UNIQUE COLLISION

ELECTRIC VEHICLE SUPPLY EQUIPMENT INSTALLATION

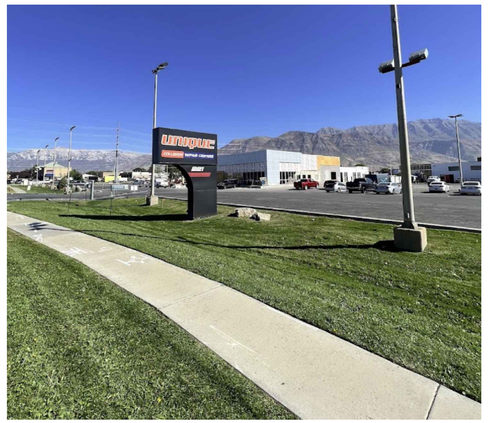

PERMIT REVIEW SET

221 SOUTH 500 EAST
AMERICAN FORK, UT 84003
PARCEL # 130570123

SCOPE OF WORK

THE PROJECT IS TO INSTALL NEW ELECTRIC VEHICLE SUPPLY EQUIPMENT (EVSE).

APPLICABLE CODES:

NATIONAL ELECTRICAL CODE (NEC): 2020
INTERNATIONAL BUILDING CODE (IBC): 2021
INTERNATIONAL FIRE CODE (IFC): 2021

REGULATORY AGENCY:

COUNTY/CITY: AMERICAN FORK
CONTACT: BUILDING DEPARTMENT
275 EAST 200 NORTH
AMERICAN FORK, UT 84003
(801) 763-3065

American Fork City
Development Review
Committee

Planning and Zoning
Reviewed
tvanekelenburg 09/14/2023

No comment

Fire Department
Reviewed
M. Sacco 09/18/2023

Communication
Reviewed
Mhunsaker 09/21/2023

Engineering Division
Reviewed
jhsu 09/19/2023

per 15.01.110
Easements on lot lines adjacent to the public right of way shall be no less than ten feet.
5' PUE for the South on lot line.

Next Step
Approved with Conditions

Proceed to Planning Commission on 10/04/2023

SHEET SCHEDULE - ELECTRICAL

SHEET NO.	DESCRIPTION
G-001	COVER SHEET
E-001	NOTES, LEGENDS, & SCHEDULES
E-100	OVERALL EXISTING SITE UTILITIES PLAN
E-101	OVERALL SITE PLAN
E-101A	ENLARGED SITE PLAN
E-101B	ENLARGED SITE LANDSCAPING PLAN
E-102	SITE PLAN DETAILS
E-601	SINGLE-LINE DIAGRAM
E-801	INFORMATION SHEET - EVSE

Know what's below. Call 811 before you dig.
BLUE STAKES OF UTAH
UTILITY NOTIFICATION CENTER, INC.
www.bluestakes.org
1-800-662-4111

1 VICINITY MAP
Scale: N.T.S.

HUNT ELECTRIC, INC.
1863 W ALEXANDER ST.
(2410 SO.)
SALT LAKE CITY, UTAH 84119
801-975-8844 FAX 801-975-0509
QUALITY, INTEGRITY, PERFORMANCE, & VERSATILITY

DESIGN-BUILD SERVICES

REV.	DATE	DESCRIPTION
1	05-05-2023	UTILITY REVISIONS
2	06-20-2023	CITY COMMENTS

PROJ. MGR. T.WOOD
DRAWN BY: K.GYGI
ENGINEER: M.SHEETS

UNIQUE COLLISION
221 SOUTH 500 EAST, AMERICAN FORK, UT 84003
COVER SHEET
PERMIT REVIEW SET
PRINTED DATE: 08-30-2023
SCALE: N.T.S.

G-001

NOTICE: THE DESIGNS SHOWN AND DESCRIBED HEREIN INCLUDING ALL TECHNICAL DRAWINGS, GRAPHICS AND MODELS THEREIN ARE PROPRIETARY AND CANNOT BE COPIED, DUPLICATED OR COMMERCIALLY EXPLOITED, IN WHOLE OR IN PART, WITHOUT THE EXPRESS WRITTEN PERMISSION OF HUNT ELECTRIC INC. AVAILABLE FOR LIMITED REVIEW AND EVALUATION BY CLIENTS, CONSULTANTS, CONTRACTORS, GOVERNMENT AGENCIES, VENDORS AND OFFICE PERSONNEL ONLY IN ACCORDANCE WITH THIS NOTICE.

ABBREVIATIONS

ABBREV.	DESCRIPTION
A	AMP OR AMPS
AF	AMP FRAME (OR AMPERE RATING OF FRAME
AHJ	AUTHORITY HAVING JURISDICTION
AIC	AMPS INTERRUPTING CAPACITY
AL	ALUMINUM
AT	AMP TRIP (OR TRIP SETTING)
AUX	AUXILIARY
AWG	AMERICAN WIRE GAUGE
BG	BELOW GRADE
C	CONDUIT
CB	COMBINER BOX
CT	CURRENT TRANSFORMER
CU	COPPER
EA	EACH
ELEC	ELECTRICAL
EM	EMERGENCY
EMT	ELECTRICAL METALLIC TUBING
ENT	ELECTRICAL NONMETALLIC TUBING
EQUIP	EQUIPMENT
EVSE	ELECTRIC VEHICLE SUPPLY EQUIPMENT
E, EX	EXISTING
F.O.	FIBER OPTIC
I.B.C.	INTERNATIONAL BUILDING CODE
INV	INVERTER
kVA	KILO VOLT AMPERES
kW	KILOWATTS
LBF	POUND FOOT - TORQUE VALUE
LV	LOW VOLTAGE
MCB	MAIN CIRCUIT BREAKER
MLO	MAIN LUGS ONLY
MM	MULTI-MODE
MV	MEDIUM VOLTAGE
MW	MEGAWATT
N.E.C.	NATIONAL ELECTRICAL CODE
N.I.C.	NOT IN CONTRACT
N.T.S.	NOT TO SCALE
O.C.	ON CENTER(S)
OCPD	OVER CURRENT PROTECTION DEVICE
PNL	PANEL
POCC	POINT OF COMMON COUPLING
PSF	POUNDS PER SQUARE FOOT
PT	POTENTIAL TRANSFORMER
QTY	QUANTITY
REQ.	REQUIREMENTS
SSD	SURGE SUPPRESSION DEVICE
SM	SINGLE-MODE
ST	SHUNT TRIP
TYP	TYPICAL
UG	UNDERGROUND
WP	WEATHERPROOF
XFMR	TRANSFORMER

add 811 information per page

ELECTRICAL SYMBOLS LEGEND

SYMBOL	DESCRIPTION
J	J-BOX
	ELECTRICAL PANEL
	POWER RISER POLE
	SOLAR PV MODULE
C	COMMUNICATION MANHOLE
E	ELECTRICAL MANHOLE
	SURGE ARRESTOR
	DUPLEX RECEPTACLE - GFCI
	DUPLEX RECEPTACLE
	NON-FUSED DISCONNECT SWITCH
	FUSED DISCONNECT SWITCH
$	SINGLE-POLE SWITCH
$2	TWO-POLE SWITCH
M	METER
PM	PRODUCTION METER
	ELECTRIC MOTOR
CB	COMBINER BOX
RCB	RECOMBINER BOX
PB	PULL BOX
	INVERTER
ST	SHUNT TRIP BREAKER
	MEDIUM VOLTAGE ELBOWS
	FUSE
TYPE	SECURITY CAMERA ("TYPE" INDICATES TYPE OF CAMERA)
	HOME RUN TO PANELBOARD
	LIGHTNING ARRESTOR
	DEVICE TERMINAL POINT
	JUNCTION OR POLARITY MARK
	CURRENT TRANSFORMER LOW SIDE POLARITY MARK
52	MEDIUM VOLTAGE CIRCUIT BREAKER
	SHORTING BLOCK
R	RELAY

CALLOUTS/NOTES LEGEND

SYMBOL	DESCRIPTION
XXX	MECHANICAL EQUIPMENT CALLOUT
X	REVISION CALLOUT
X	LIGHT FIXTURE CALLOUT
XXX	OWNER PROVIDED EQUIPMENT CALLOUT
X	KEYED NOTE
X	WIRE CONDUIT - ALUMINUM
X	WIRE CONDUIT - COPPER
XXX XXX	DETAIL CALLOUT
X X-XXX	WARNING LABEL CALLOUT
XXX XXX	ELEVATION CALLOUT

ELECTRICAL SPECIFICATIONS:

1. SCOPE OF WORK

1.1. THE PROJECT IS TO INSTALL NEW ELECTRIC VEHICLE SUPPLY EQUIPMENT (EVSE).

1.2. ALL CONSTRUCTION SHALL COMPLY WITH THE 2021 EDITION OF INTERNATIONAL BUILDING CODE (IBC), 2021 INTERNATIONAL FIRE CODE (IFC), AND THE 2020 NATIONAL ELECTRICAL CODE (NEC) AS SPECIFIED IN THE PROJECT SPECIFIC NOTES. IT SHALL ALSO COMPLY WITH ALL APPLICABLE CITY, COUNTY, STATE AND LOCAL ELECTRICAL UTILITY CODES, RULES AND REGULATIONS.

1.3. THE PERMIT WILL INCLUDE LABOR FOR CONSTRUCTION OF THE ARRAY AND INSTALLATION OF ALL ELECTRICAL EQUIPMENT. THE CONTRACTOR WILL PROVIDE COMPETENT SUPERVISION FOR THE WORK TO BE ACCOMPLISHED.

1.4. HUNT ELECTRIC, INC. AND THEIR SUBCONTRACTORS AGREE THAT IN ACCORDANCE WITH GENERALLY ACCEPTED CONSTRUCTION PRACTICES, WILL BE REQUIRED TO ASSUME SOLE AND COMPLETE RESPONSIBILITY FOR SAFETY OF ALL PERSONS AND PROPERTY AND THAT THIS REQUIREMENT SHALL BE MADE TO APPLY CONTINUOUSLY AND IS NOT LIMITED TO NORMAL WORKING HOURS.

1.5. HUNT ELECTRIC, INC. AND THEIR SUBCONTRACTORS WILL BE REQUIRED TO REPAIR ANY DAMAGE DONE TO BUILDINGS, GROUNDS OR UTILITIES AT NO ADDITIONAL COST TO THE CUSTOMER. DEFECTIVE MATERIALS OR WORKMANSHIP WILL NOT BE ALLOWED ON THIS PROJECT. REASONABLE HOUSEKEEPING AND CLEAN UP SHALL BE CONDUCTED BOTH DURING THE EXECUTION OF AND AT THE CONCLUSION OF THE PROJECT.

1.6. BEFORE FINAL APPROVAL IS ISSUED, A CODE INSPECTION REPORT RECOMMENDING THAT FINAL APPROVAL OF THE PROJECT BE GIVEN NEEDS TO BE PROVIDED TO THE AUTHORITY HAVING JURISDICTION (AHJ).

1.7. LIGHTNING PROTECTION IS NOT INCLUDED IN THIS SCOPE.

2. GENERAL

2.1. ONLY NEW MATERIALS, FREE OF DEFECTS, WILL BE INSTALLED AS PART OF THE PROJECT. ALL NEW INSTALLED EQUIPMENT WILL BE APPROPRIATELY LISTED AND RATED. ALL NEW EQUIPMENT SHALL HAVE PERMANENT PLASTIC ENGRAVED IDENTIFICATION TAGS INSTALLED.

2.2. ALL CUTTING AND PATCHING REQUIRED FOR INSTALLATION OF NEW RACEWAYS AND EQUIPMENT SHALL BE THE RESPONSIBILITY OF HUNT ELECTRIC, INC. ALL WORK SHALL BE PERFORMED BY TRADESMAN EXPERIENCED IN THE WORK REQUIRED. ALL FINISHES SHALL MATCH THE EXISTING ADJACENT FINISHES. OPENINGS IN FIRE RATED WALLS WILL BE PATCHED IN A MANNER MAINTAINING THE ORIGINAL FIRE AND SMOKE RATINGS.

2.3. HUNT ELECTRIC, INC. WILL COORDINATE ALL POWER OUTAGES WITH THE OWNER'S REPRESENTATIVE IN ADVANCE.

2.4. PANEL DESIGNATIONS SHOWN ON THESE DRAWINGS ARE GIVEN FOR CLARIFICATION OF CIRCUITING ONLY, AND MAY NOT CORRESPOND TO THE DESIGNATIONS FOUND IN THE FIELD.

2.5. ALL DRAWINGS TO MEET AHJ STANDARDS UNLESS OTHERWISE NOTED.

3. CONDUIT AND WIRE

3.1. ALL EXISTING CONDUIT RUNS ARE NOT SHOWN. HUNT ELECTRIC, INC. SHALL VERIFY EXISTING CONDUIT LOCATIONS IN FIELD.

3.2. ALL CONDUCTORS WILL BE RUN IN CONDUIT AS SPECIFIED ON THE DRAWINGS. IN AREAS SUBJECT TO PHYSICAL DAMAGE, RIGID GALVANIZED STEEL CONDUIT SHOULD BE UTILIZED. ANY SUCH LOCATIONS HAVE BEEN SPECIFIED APPROPRIATELY ON THE DRAWINGS. ELECTRICAL METALLIC TUBING (EMT) MAY BE USED FOR ALL INTERIOR AND EXTERIOR PROTECTED CONDUIT AS DESIGNATED ON THE DRAWINGS.

3.3. EMT FITTINGS MUST BE COMPRESSION TYPE OR STEEL SET SCREW TYPE, EACH WITH CODE SIZED BOND WIRE OR LISTED AS A CONTINUOUS BOND.

3.4. A PULL ROPE SHALL BE INSTALLED IN ALL EMPTY CONDUITS.

3.5. CONDUCTORS SHALL BE COPPER UNLESS SPECIFICALLY NOTED OTHERWISE ON THE DRAWINGS. INSULATION FOR ALL CONDUCTORS (OTHER THAN PV WIRE) SHALL BE THWN-2.

3.6. ALL SECONDARY SERVICES, FEEDER AND BRANCH CIRCUIT CONDUCTORS SHALL BE COLOR CODED AS FOLLOWS:

PHASE	120/240 VOLT	120/208 VOLT	277/480 VOLT
A	BLACK	BLACK	BROWN
B	RED	RED	ORANGE
C	----	BLUE	YELLOW
NEUTRAL	WHITE	WHITE	GRAY
GROUND	GREEN	GREEN	GREEN

3.7. CONDUCTORS IN SIZE #6 AND BELOW SHALL BE COLOR CODED WITH COLORED INSULATION. LARGER SIZES MAY BE IDENTIFIED WITH COLORED TAPE AT ALL TERMINATIONS, JUNCTION BOXES, AND PULL BOXES. ALL CONDUCTORS #12 AWG AND LARGER SHALL BE STRANDED.

3.8. ALL ELECTRICAL WIRING AND EQUIPMENT SHALL BE PROPERLY DESIGNED FOR OVERLOAD PROTECTION.

3.9. WHERE WIRING AND CONDUIT SIZES ARE INDICATED FOR HOMERUNS, THESE SIZES APPLY TO THE ENTIRE LENGTH FROM THE PROTECTIVE DEVICE IN THE PANEL TO THE EQUIPMENT OR LAST WIRING DEVICE.

3.10. ALL CONDUITS PENETRATING ROOFS, FLOORS OR WALLS SHALL BE MADE WATERTIGHT BY PROPER FLASHING, CAULKING OR SEALING.

4. GROUNDING

4.1. ALL GROUNDING WILL MEET THE REQUIREMENTS OF THE STATE ADOPTED CODE AND THE NEC. ALL ELECTRICAL EQUIPMENT SHALL BE PROPERLY GROUNDED.

4.2. ALL INSULATED EQUIPMENT GROUNDING CONDUCTORS, IN ACCORDANCE WITH NEC 250.122, SHALL BE PROVIDED IN ALL CONDUITS WITH CONDUCTORS. ALL LUGS SHALL BE COPPER RATED.

4.3. GROUND WIRE UP TO #6 AWG SHALL BE PERMITTED TO BE SOLID.

5. EQUIPMENT

5.1. ALL ELECTRICAL COMPONENTS INSTALLED OUTDOORS, EXPOSED TO THE WEATHER OR IN DAMP LOCATIONS SHALL BE WEATHERPROOF, NEMA 3R, MINIMUM.

5.2. ALL FIXTURES, DEVICES, RACEWAYS, CABINETS, BOXES, FIXTURES SHALL BE SUPPORTED FROM THE BUILDING STRUCTURE IN AN APPROVED MANNER, CONFORMING TO NEC ARTICLE 314.

5.3. AT THE COMPLETION OF THE PROJECT, NEATLY TYPED ACCURATE PANELBOARD DIRECTORIES INDICATING ALL BRANCH CIRCUITS AND SPARES WILL BE PROVIDED. ALL SPARES SHALL BE LEFT IN THE OFF POSITION.

5.4. ALL SAFETY SWITCH SHALL BE HEAVY-DUTY TYPE WITH COVER INTERLOCK AND HANDLE LOCK OFF PROVISIONS. SWITCHES SHALL BE MANUFACTURED BY A COMPANY CONSISTENT WITH OTHER INSTALLED EQUIPMENT WHENEVER POSSIBLE. PART NUMBERS, RATING AND FUSING SHALL BE AS SHOWN ON THE DRAWINGS.

6. WIRING DEVICES

6.1. RECEPTACLES SHALL BE AS DESIGNATED ON THE DRAWINGS AND SHOULD BE A BRAND CONSISTENT WITH OTHERS IN THE VICINITY WHENEVER POSSIBLE.

6.2. ALL WIRING DEVICES SHALL BE PROVIDED WITH APPROPRIATE COVER PLATES. ANY EMPTY BOXES SHALL HAVE BLANK COVER PLATES. COVER PLATES SHALL BE LEXAN, PLASTIC, OR STAINLESS STEEL IN FINISHED AREA. GALVANIZED COVER PLATES MAY BE USED IN EQUIPMENT ROOFS.

1863 W ALEXANDER ST.
PO BOX 1011
SALT LAKE CITY, UTAH 84119
801-975-8844 FAX 801-975-0509

HUNT ELECTRIC, INC.
QUALITY, INTEGRITY, PERFORMANCE, & VERSATILITY

DESIGN-BUILD SERVICES

REV.	DATE	DESCRIPTION
1	05-05-2023	UTILITY REVISIONS
2	06-20-2023	CITY COMMENTS

PROJ. MGR. T.WOOD
DRAWN BY: K.GYGI
ENGINEER: M.SHEETS

UNIQUE COLLISION
221 SOUTH 500 EAST, AMERICAN FORK, UT 84003
NOTES, LEGENDS, SCHEDULES

PERMIT REVIEW SET

SCALE: N.T.S.
PRINTED DATE: 08-30-2023

E-001

NOTICE: THE DESIGNS SHOWN AND DESCRIBED HEREIN INCLUDING ALL TECHNICAL DRAWINGS, GRAPHICS AND MODELS THEREIN ARE PROPRIETARY AND CANNOT BE COPIED, DUPLICATED OR COMMERCIALLY EXPLOITED, IN WHOLE OR IN PART, WITHOUT THE EXPRESS WRITTEN PERMISSION OF HUNT ELECTRIC INC. AVAILABLE FOR LIMITED REVIEW AND EVALUATION BY CLIENTS, CONSULTANTS, CONTRACTORS, GOVERNMENT AGENCIES, VENDORS AND OFFICE PERSONNEL ONLY IN ACCORDANCE WITH THIS NOTICE.

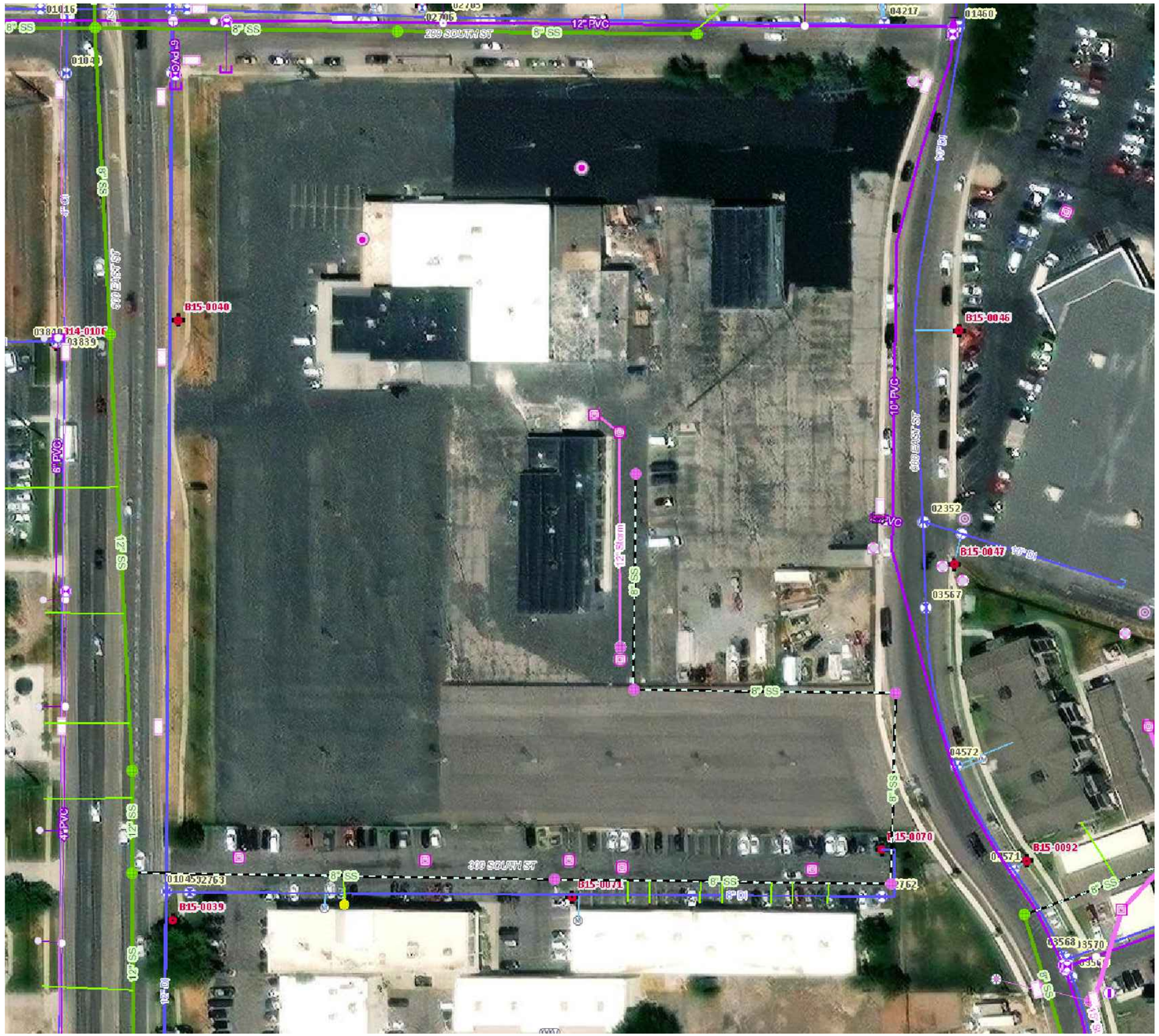

GENERAL NOTES:

1. BACKGROUND MAP IMAGE IS PROVIDED BY OTHERS AND SHOWN FOR REFERENCE ONLY.
2. VERIFY ALL EXISTING SITE CONDITIONS PRIOR TO START OF CONSTRUCTION.

June 22, 2023

Streets
- Federal
- Arterial
- Major Collector
- Minor Collector
- Significant Local
- Local
- Alley
- Private
- Future

Manholes
- American Fork
- Highland
- Lehi
- Private
- State of Utah
- TSSD
- Clean Outs
- Network Structures
- Discharge Points
- Lateral Lines

Mains
- American Fork
- Cedar Hills
- Highland
- Lehi
- Private
- State of Utah
- TSSD
- Abandoned Lines
- Casings

swMains
- Junction Chamber
- Unknown

swManholes
- Bubble-Up
- Catchbasin
- Catchbasin Round
- Catchbasin Square
- Curb Inlet
- Other
- Sump
- Unknown
- swInlets
- swDischarge Points
- swNetwork Structures
- swCulverts

swOpen Drains
- <all other values>
- 30" +
- 16" - 24"
- 9" - 15"
- 4" - 8"
- swDetention Areas
- PI Control Valves
- PI System Valves

PI Fitting
- Air Vac
- Back Flow Preventer
- Bend
- Blow Off
- Cap
- Cathodic Protection Annode
- Coupling
- Cross
- Diversion Box
- Drain
- Junction Box
- Other

1:2,257

0 0.02 0.04 0.08 mi

0 0.03 0.07 0.13 km

American Fork GIS Division, Maxar, Microsoft, AF GIS Division, American Fork GIS, American Fork City GIS Division

NOTICE: THE DESIGNS SHOWN AND DESCRIBED HEREIN INCLUDING ALL TECHNICAL DRAWINGS, GRAPHICS AND MODELS THEREIN ARE PROPRIETARY AND CANNOT BE COPIED, DUPLICATED OR COMMERCIALLY EXPLOITED, IN WHOLE OR IN PART, WITHOUT THE EXPRESS WRITTEN PERMISSION OF HUNT ELECTRIC INC. AVAILABLE FOR LIMITED REVIEW AND EVALUATION BY CLIENTS, CONSULTANTS, CONTRACTORS, GOVERNMENT AGENCIES, VENDORS AND OFFICE PERSONNEL ONLY IN ACCORDANCE WITH THIS NOTICE.

HUNT ELECTRIC, INC.
1863 W ALEXANDER ST. (2410 SO.)
SALT LAKE CITY, UTAH 84119
801-975-8844 FAX 801-975-0509
QUALITY, INTEGRITY, PERFORMANCE, & VERSATILITY

DESIGN-BUILD SERVICES

REV.	DATE	DESCRIPTION
1	05-05-2023	UTILITY REVISIONS
2	06-20-2023	CITY COMMENTS

PROJ. MGR. T.WOOD

DRAWN BY: K.GYGI

ENGINEER: M.SHEETS

UNIQUE COLLISION

221 SOUTH 500 EAST, AMERICAN FORK, UT 84003

OVERALL EXISTING SITE UTILITIES PLAN

PERMIT REVIEW SET

PRINTED DATE: 08-30-2023

SCALE: AS NOTED

E-100

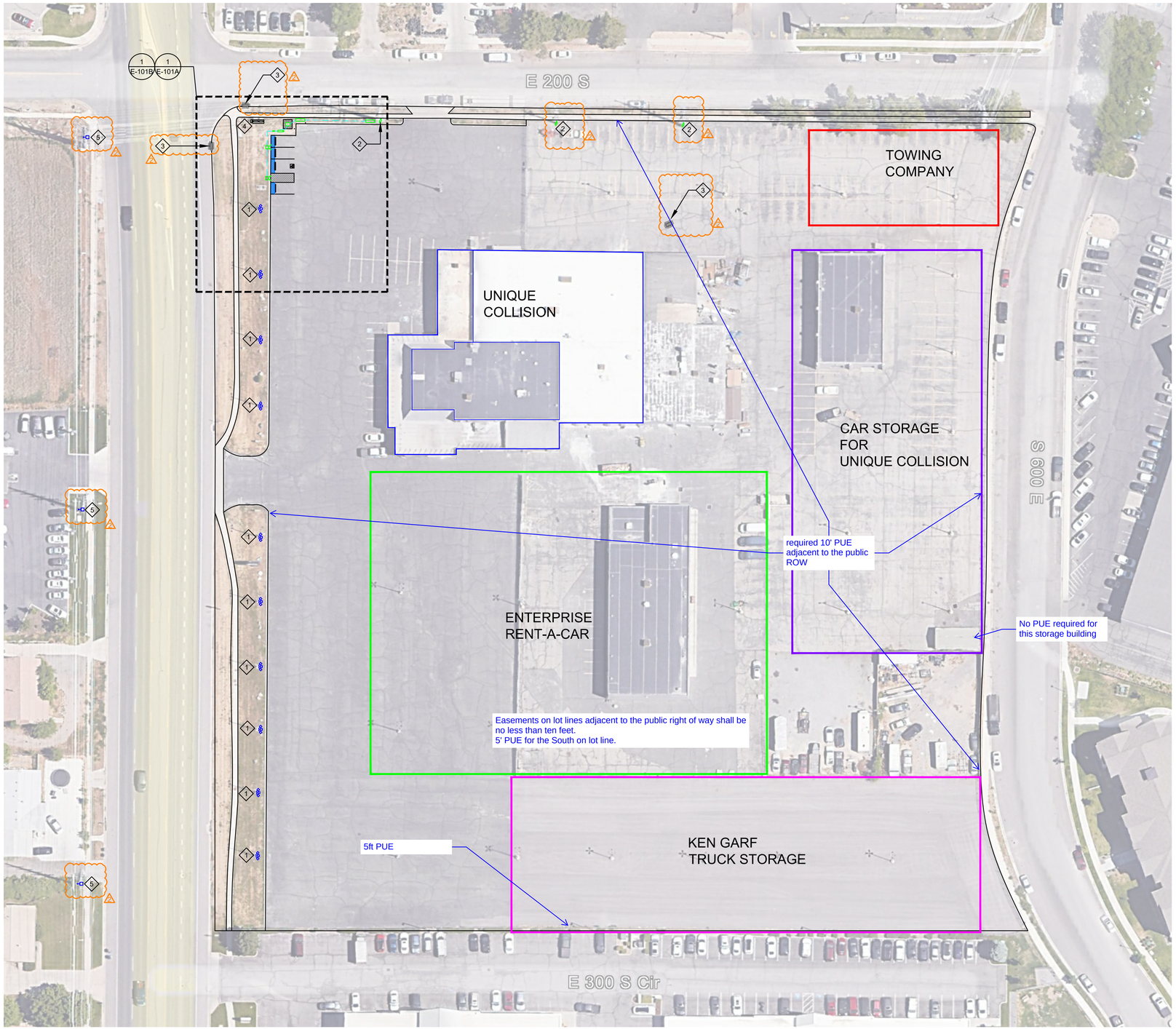

1 OVERALL SITE PLAN
Scale: 1" = 40'-0"

N
W E
S

0 20' 40' 80'
Scale: 1" = 40'-0"
NOTE:
SCALE BASED ON PRINTED SHEET SIZE: 24 X 36"

KEYED NOTES:

1. EXISTING STREET LIGHTING POLE TO REMAIN.
2. APPROXIMATE LOCATION OF EXISTING UTILITY POLES.
3. PROVIDE INLET PROTECTION FOR EXISTING STORM DRAINS WITH EROSION CONTROL ROLLS.
4. APPROXIMATE LOCATION OF EXISTING ELECTRICAL/COMMUNICATIONS EQUIPMENT.
5. APPROXIMATE LOCATION OF EXISTING STREET LIGHTING ON TRANSMISSION POLES ON WEST SIDE OF STREET.

ON THE OVERALL SITE PLAN OR THE ENLARGED SITE PLAN, PUT A NOTE IN THAT THE PARKING SPACES WILL BE STRIPED IN ACCORDANCE WITH THE APPROVED SITE PLAN.

GENERAL NOTES:

1. BACKGROUND MAP IMAGE IS SHOWN FOR REFERENCE ONLY. FIELD COORDINATE EXACT LOCATION OF EV CHARGING STATIONS AND ASSOCIATED EQUIPMENT USING REQUIRED CLEARANCES.

HUNT ELECTRIC, INC.
1863 W ALEXANDER ST. (2410 SO.)
SALT LAKE CITY, UTAH 84119
801-975-8844 FAX 801-975-0509
QUALITY, INTEGRITY, PERFORMANCE, & VERSATILITY

DESIGN-BUILD SERVICES

REV.	DATE	DESCRIPTION
1	05-05-2023	UTILITY REVISIONS
2	06-20-2023	CITY COMMENTS

PROJ. MGR. T.WOOD
DRAWN BY: K.GYGI
ENGINEER: M.SHEETS

UNIQUE COLLISION

221 SOUTH 500 EAST, AMERICAN FORK, UT 84003

OVERALL SITE PLAN

PERMIT REVIEW SET

PRINTED DATE: 08-30-2023

SCALE: AS NOTED

E-101

NOTICE: THE DESIGNS SHOWN AND DESCRIBED HEREIN INCLUDING ALL TECHNICAL DRAWINGS, GRAPHICS AND MODELS THEREIN ARE PROPRIETARY AND CANNOT BE COPIED, DUPLICATED OR COMMERCIALLY EXPLOITED, IN WHOLE OR IN PART, WITHOUT THE EXPRESS WRITTEN PERMISSION OF HUNT ELECTRIC INC. AVAILABLE FOR LIMITED REVIEW AND EVALUATION BY CLIENTS, CONSULTANTS, CONTRACTORS, GOVERNMENT AGENCIES, VENDORS AND OFFICE PERSONNEL ONLY IN ACCORDANCE WITH THIS NOTICE.

KEYED NOTES:

1. PROPOSED LOCATION OF NEW ELECTRIC VEHICLE SUPPLY EQUIPMENT (EVSE). FIELD COORDINATE EXACT LOCATION.
2. PROVIDE WHEEL STOPS IN FRONT OF EACH EVSE. INSTALL STOPS 3' FROM CURB. FIELD COORDINATE EXACT LOCATION.
3. PROPOSED NEW UTILITY 300kVA TRANSFORMER SIZE ON FLAT PAD SHOWN FOR REFERENCE ONLY. TRANSFORMER PAD (SEE DETAIL 6 ON SHEET E-102)TO BE PROVIDED AND INSTALLED BY HUNT ELECTRIC. TRANSFORMER PROVIDED AND INSTALLED BY UTILITY. 1
4. PROPOSED LOCATION OF NEW MDP.
5. PROPOSED LOCATION OF NEW CT CABINET/METER.
6. EXISTING UTILITY SECTIONALIZER TO BE REPLACED BY UTILITY. 1
7. NOT USED.
8. PROPOSED LOCATION OF NEW UTILITY SECTIONALIZER. SECTIONALIZER PROVIDED AND INSTALLED BY UTILITY.
9. PROPOSED LOCATION OF PIPE BOLLARD TO PROTECT EQUIPMENT. INSTALL BOLLARD AT SOUTHEAST CORNER OF UTILITY EQUIPMENT. COORDINATE WITH UTILITY FOR EXACT SPECIFICATIONS. SEE PIPE BOLLARD DETAIL 1 ON SHEET E-102. 1
10. PROPOSED LOCATION OF CONDUIT TO BE INSTALLED BY HUNT ELECTRIC (CONDUCTORS BY UTILITY). VERIFY SITE CONDITIONS. SEE SHEET E-601 FOR CONDUIT SIZE AND QUANTITY.
11. ALL OPERABLE PARTS OF EVSE SHALL BE NO HIGHER THAN 48" ABOVE GRADE FOR ADA ACCESS.
12. PROVIDE INLET PROTECTION FOR EXISTING STORM DRAINS WITH EROSION CONTROL ROLLS. 2

GENERAL NOTES:

1. BACKGROUND MAP IMAGE IS SHOWN FOR REFERENCE ONLY. FIELD COORDINATE EXACT LOCATION OF EVSE AND ASSOCIATED EQUIPMENT USING REQUIRED CLEARANCES.

SYMBOLS LEGEND

CONDUIT PATH

EVSE ELECTRIC VEHICLE SUPPLY EQUIPMENT

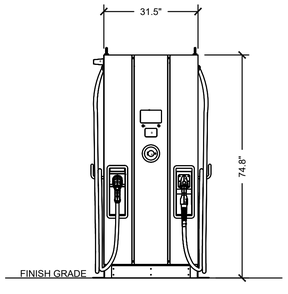

1 ENLARGED SITE PLAN
Scale: 1/8" = 1'-0"

N
W E
S

0 4' 8' 16'
Scale: 1/8" = 1'-0"
NOTE:
SCALE BASED ON PRINTED SHEET SIZE: 24 X 36"

2 EVSE ELEVATION VIEW
Scale: N.T.S.

HUNT ELECTRIC, INC.
1863 W ALEXANDER ST.
(2410 SO.)
SALT LAKE CITY, UTAH 84119
801-975-8844 FAX 801-975-0509
QUALITY, INTEGRITY, PERFORMANCE, & VERSATILITY

DESIGN-BUILD SERVICES

REV.	DATE	DESCRIPTION
1	05-05-2023	UTILITY REVISIONS
2	06-20-2023	CITY COMMENTS

PROJ. MGR. T.WOOD
DRAWN BY: K.GYGI
ENGINEER: M.SHEETS

UNIQUE COLLISION

221 SOUTH 500 EAST, AMERICAN FORK, UT 84003
ENLARGED SITE PLAN
PERMIT REVIEW SET

SCALE: AS NOTED
PRINTED DATE: 08-30-2023

E-101A

NOTICE: THE DESIGNS SHOWN AND DESCRIBED HEREIN INCLUDING ALL TECHNICAL DRAWINGS, GRAPHICS AND MODELS THEREIN ARE PROPRIETARY AND CANNOT BE COPIED, DUPLICATED OR COMMERCIALLY EXPLOITED, IN WHOLE OR IN PART, WITHOUT THE EXPRESS WRITTEN PERMISSION OF HUNT ELECTRIC INC. AVAILABLE FOR LIMITED REVIEW AND EVALUATION BY CLIENTS, CONSULTANTS, CONTRACTORS, GOVERNMENT AGENCIES, VENDORS AND OFFICE PERSONNEL ONLY IN ACCORDANCE WITH THIS NOTICE.

GENERAL NOTES:

1. BACKGROUND MAP IMAGE IS SHOWN FOR REFERENCE ONLY. FIELD COORDINATE EXACT LOCATION OF EVSE AND ASSOCIATED EQUIPMENT USING REQUIRED CLEARANCES.
2. EXISTING CONCRETE/LANDSCAPE TO BE REMOVED FOR NEW EVSE. COORDINATE CUTTING WITH OWNER.
3. REPAIR ALL ASPHALT, CONCRETE, LANDSCAPING, IRRIGATION, SIDEWALKS, CURBS, ETC. DAMAGED OR ALTERED AS A RESULT OF THIS INSTALLATION. ALL REPAIRS TO MATCH EXISTING CONDITIONS.
4. MAINTAIN EXISTING GRADE IN AREA WHERE EVSE TO BE INSTALLED.

1 ENLARGED SITE LANDSCAPING PLAN
Scale: 1/8" = 1'-0"

N
W E
S

0 4' 8' 16'
Scale: 1/8" = 1'-0"
NOTE:
SCALE BASED ON PRINTED SHEET SIZE: 24 X 36"

NOTICE: THE DESIGNS SHOWN AND DESCRIBED HEREIN INCLUDING ALL TECHNICAL DRAWINGS, GRAPHICS AND MODELS THEREIN ARE PROPRIETARY AND CANNOT BE COPIED, DUPLICATED OR COMMERCIALLY EXPLOITED, IN WHOLE OR IN PART, WITHOUT THE EXPRESS WRITTEN PERMISSION OF HUNT ELECTRIC INC. AVAILABLE FOR LIMITED REVIEW AND EVALUATION BY CLIENTS, CONSULTANTS, CONTRACTORS, GOVERNMENT AGENCIES, VENDORS AND OFFICE PERSONNEL ONLY IN ACCORDANCE WITH THIS NOTICE.

HUNT ELECTRIC, INC.
1863 W ALEXANDER ST.
(2410 SO.)
SALT LAKE CITY, UTAH 84119
801-975-8844 FAX 801-975-0509
QUALITY, INTEGRITY, PERFORMANCE, & VERSATILITY

DESIGN-BUILD SERVICES

REV.	DATE	DESCRIPTION
1	05-05-2023	UTILITY REVISIONS
2	06-20-2023	CITY COMMENTS

PROJ. MGR. T.WOOD
DRAWN BY: K.GYGI
ENGINEER: M.SHEETS

UNIQUE COLLISION

221 SOUTH 500 EAST, AMERICAN FORK, UT 84003
ENLARGED SITE LANDSCAPING PLAN

PRINTED DATE: 08-30-2023
SCALE: AS NOTED
PERMIT REVIEW SET

E-101B

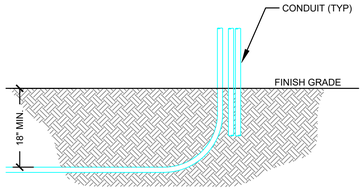

3 CONDUIT SWEEP DETAIL

Scale: N.T.S.

DETAIL NOTES:

1. VERIFY ELECTRICAL SERVICE REQUIREMENTS WITH UTILITY.
2. BURIAL DEPTH OF CONDUIT TO BE INSTALLED MIN. 18" DEEP. IF CONDUIT INSTALLED UNDER VEHICULAR TRAFFIC, DEPTH SHALL BE MIN. 24" DEEP.

CONDUIT SWEEP	
CONDUIT DIAMETER (INSIDE)	LONG RADIUS SWEEP
3"	36"
4"	36"
6"	48"

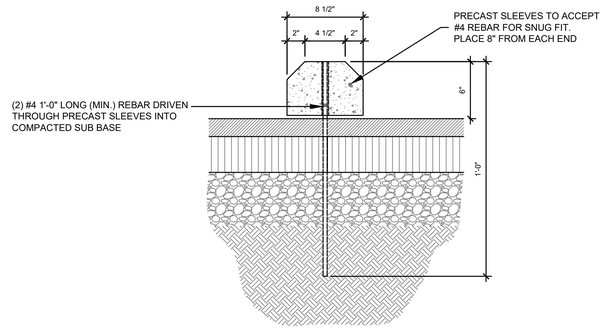

2 WHEEL STOP DETAIL

Scale: N.T.S.

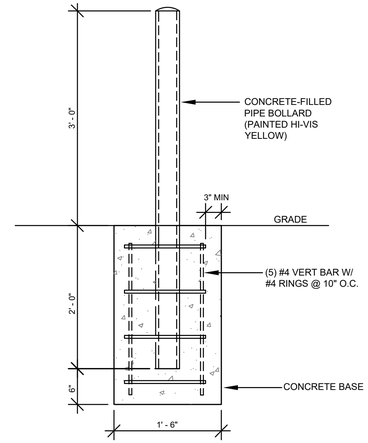

1 PIPE BOLLARD DETAIL

Scale: N.T.S.

DETAIL NOTES:

1. DEPTHS AND WIDTHS OF BOLLARD TRENCHES TO COMPLY WITH UTILITY STANDARDS.

SHEET NOTES:

1. NOT ALL DETAILS ON THIS SHEET WILL BE USED ON THIS PROJECT.

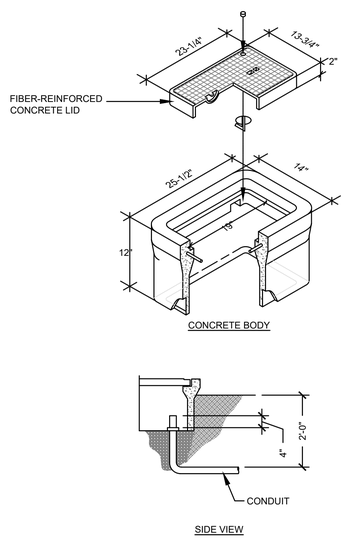

4 CONCRETE J-BOX DETAIL

Scale: N.T.S.

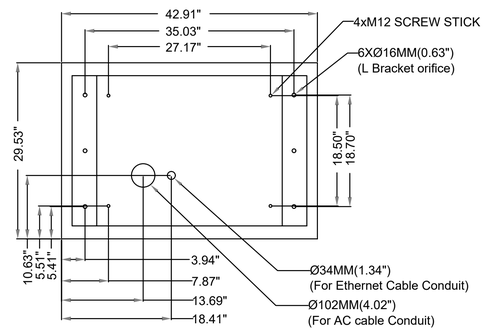

5 EVSE MOUNTING TEMPLATE DETAIL

Scale: N.T.S.

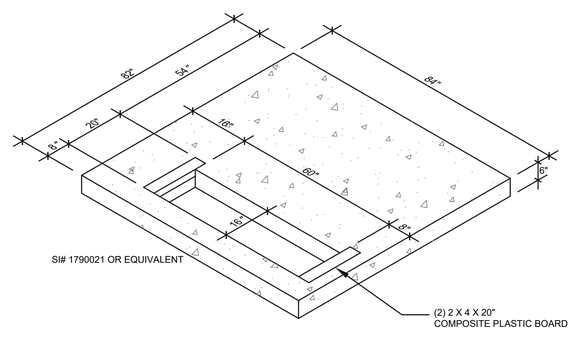

6 THREE-PHASE TRANSFORMER FLAT PAD DETAIL - SI# 1790021

Scale: N.T.S.

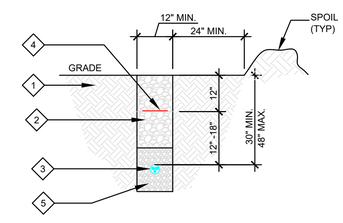

7 PRIMARY TRENCH DETAIL

Scale: N.T.S.

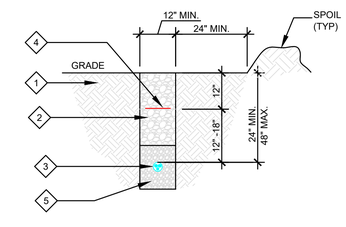

8 SECONDARY TRENCH DETAIL

Scale: N.T.S.

TRENCH DETAIL KEYED NOTES:

1. UNDISTURBED EARTH.
2. APPROVED BACKFILL.
3. SERVICE CONDUIT/CABLE.
4. DETECTOR TAPE SHALL BE 3" WIDE MIN. AND SHALL READ, "CAUTION, BURIED ELECTRIC LINE BELOW". TAPE MUST BE DETECTABLE AT 3' BELOW GRADE. BURY TAPE 12" BELOW FINISHED GRADE OR 6" BELOW TOP OF SUBGRADE BENEATH PAVEMENTS AND SLABS.
5. 6" OF SCREENED BACKFILL SHALL SURROUND SERVICE CONDUIT. SCREENED BACKFILL SHALL CONTAIN ONLY SOIL AND ROCKS THAT WILL PASS THROUGH 4" SIEVE.

GENERAL NOTES:

1. WHERE PRIMARY AND SECONDARY CIRCUITS CROSS, A MINIMUM SEPARATION OF 12" IS REQUIRED.

NOTICE: THE DESIGNS SHOWN AND DESCRIBED HEREIN INCLUDING ALL TECHNICAL DRAWINGS, GRAPHICS AND MODELS THEREIN ARE PROPRIETARY AND CANNOT BE COPIED, DUPLICATED OR COMMERCIALLY EXPLOITED, IN WHOLE OR IN PART, WITHOUT THE EXPRESS WRITTEN PERMISSION OF HUNT ELECTRIC INC. AVAILABLE FOR LIMITED REVIEW AND EVALUATION BY CLIENTS, CONSULTANTS, CONTRACTORS, GOVERNMENT AGENCIES, VENDORS AND OFFICE PERSONNEL ONLY IN ACCORDANCE WITH THIS NOTICE.

1863 W ALEXANDER ST.
P.O. BOX 1101
SALT LAKE CITY, UTAH 84119
801-975-8844 FAX 801-975-0509

HUNT ELECTRIC, INC.
QUALITY, INTEGRITY, PERFORMANCE, & VERSATILITY
DESIGN-BUILD SERVICES

REV.	DATE	DESCRIPTION
1	05-05-2023	UTILITY REVISIONS
2	06-20-2023	CITY COMMENTS

PROJ. MGR. T.WOOD
DRAWN BY: K.GYGI
ENGINEER: M.SHEETS

UNIQUE COLLISION
221 SOUTH 500 EAST, AMERICAN FORK, UT 84003
SITE PLAN DETAILS
PERMIT REVIEW SET

SCALE: AS NOTED
PRINTED DATE: 08-30-2023

E-102

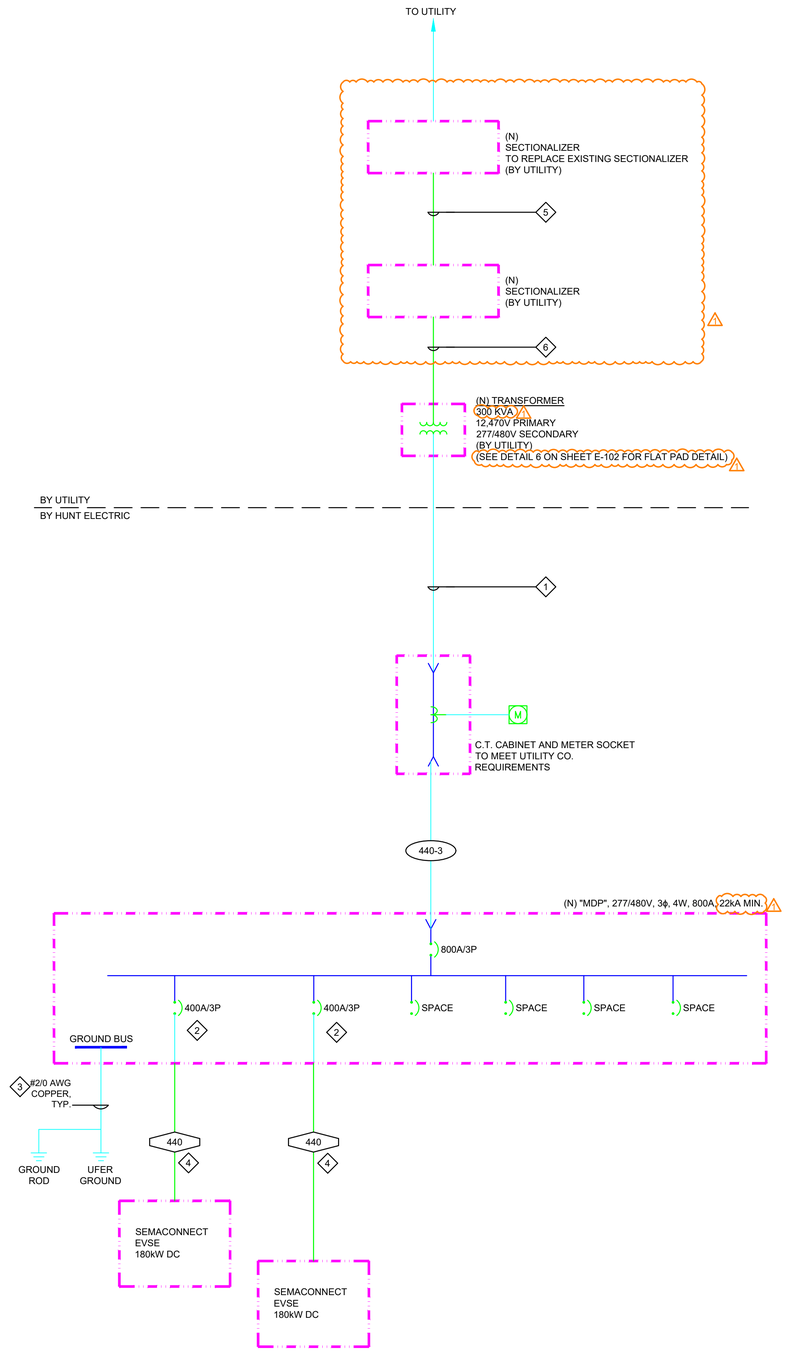

1 SINGLE-LINE DIAGRAM
Scale: N.T.S.

KEYED NOTES:

1. (3) 4" SCHEDULE 40 PVC CONDUIT. RACEWAY BY HUNT ELECTRIC CONDUCTORS BY UTILITY
2. PROVIDE BREAKER PADLOCKING DEVICE ON BREAKER. SEE DETAIL 2 ON THIS SHEET. BREAKER SHALL BE LOCKABLE IN THE OPEN POSITION IN ACCORDANCE WITH NEC 625.43. ABB PRODUCT ID 1SDA066589R1.
3. GROUNDING ELECTRODE CONDUCTOR AND BONDING JUMPER SIZES ARE BASED ON ASSUMED SERVICE FEEDER SIZES. COORDINATE SERVICE WITH UTILITY AND VERIFY GEC AND BONDING JUMPER SIZE WITH NEC 250.
4. WIRE TO BE RATED FOR 90°C.
5. (1) 6" SCHEDULE 40 PVC CONDUIT RACEWAY BY HUNT ELECTRIC CONDUCTORS BY UTILITY SWEEPS TO BE FIBERGLASS
6. (1) 4" SCHEDULE 40 PVC CONDUIT RACEWAY BY HUNT ELECTRIC CONDUCTORS BY UTILITY SWEEPS TO BE FIBERGLASS

GENERAL NOTES:

1. VERIFY ALL MANUFACTURER TORQUE RATINGS. USE ACCEPTABLE MARKING PRACTICES.

COPPER CONDUCTOR & CONDUIT SCHEDULE

TYPE	MAX PROT	CONDUIT SIZE	CONDUCTOR QTY	CONDUCTOR SIZE	GND
440	335A	3"	4	400	3

ALUMINUM CONDUCTOR & CONDUIT SCHEDULE FOR PARALLEL RUNS

TYPE	MAX PROT	CONDUCTOR AMPACITY	SETS	CONDUCTOR QTY	CONDUCTOR SIZE	CONDUIT SIZE	GND
440-3	800A	810A	3	4	400	3"	3/0

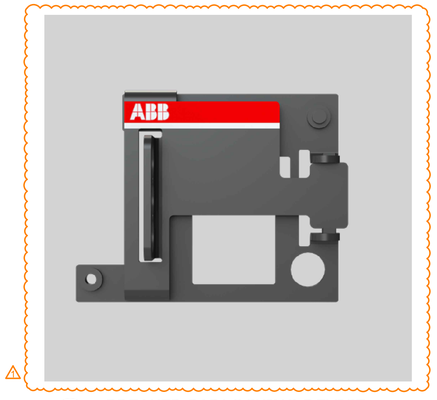

2 BREAKER PADLOCKING DEVICE
Scale: N.T.S.

HUNT ELECTRIC, INC.
1863 W ALEXANDER ST.
(2410 SO.)
SALT LAKE CITY, UTAH 84119
801-975-8844 FAX 801-975-0509
QUALITY, INTEGRITY, PERFORMANCE, & VERSATILITY

DESIGN-BUILD SERVICES

REV.	DATE	DESCRIPTION
1	05-05-2023	UTILITY REVISIONS
2	06-20-2023	CITY COMMENTS

PROJ. MGR. T.WOOD
DRAWN BY: K.GYGI
ENGINEER: M.SHEETS

UNIQUE COLLISION

221 SOUTH 500 EAST, AMERICAN FORK, UT 84003

SINGLE-LINE DIAGRAM

PRINTED DATE: 08-30-2023

SCALE: N.T.S.

PERMIT REVIEW SET

E-601

NOTICE: THE DESIGNS SHOWN AND DESCRIBED HEREIN INCLUDING ALL TECHNICAL DRAWINGS, GRAPHICS AND MODELS THEREIN ARE PROPRIETARY AND CANNOT BE COPIED, DUPLICATED OR COMMERCIALLY EXPLOITED, IN WHOLE OR IN PART, WITHOUT THE EXPRESS WRITTEN PERMISSION OF HUNT ELECTRIC INC. AVAILABLE FOR LIMITED REVIEW AND EVALUATION BY CLIENTS, CONSULTANTS, CONTRACTORS, GOVERNMENT AGENCIES, VENDORS AND OFFICE PERSONNEL ONLY IN ACCORDANCE WITH THIS NOTICE.

SEMACONNECT
A Blink Charging Company

SemaConnect 180kW DC Charging Station Technical Specification

Configuration	
Number of Ports	Two
Credit Card Reader	Optional - Magnetic, EMV and Contactless (coming soon)
Electrical Specification – DC Output	
Power	180 kW Max
Current	200A@500Vdc
Voltage	150 ~ 950 VDC
Connector Type	CCS1
Charging Interface	DIN 70121, ISO15118
Electrical Specification – AC Input	
Power	194 kVA Max
Current	3-phase: 232A Max
Voltage	3-phase: 277Y/480Y VAC
Frequency	50/60 Hz
Power Factor	> 0.99
Safety Specification	
Input Protection	Over/under voltage, over current, over power, over temperature and surge protection
Output Protection	Over/under voltage, over-current, over temperature and short-circuit protection
Internal Protection	Over temperature detection, AC contactor detection, DC contactor detection, Fuse detection
Safety and EMI Compliance	UL 2202, UL 2231-1, UL 2231-2
EMI Compliance	FCC Part 15 Class A
Network Specification	
Data Communication	Cellular 4G LTE/Wi-Fi/Ethernet (Wi-Fi coming soon)
Communication Protocol	OCPP Compliant
Firmware Management	Over-the-Air (OTA) update enabled
User Interaction Specification	
Display	7" LCD
RFID Reader	ISO14443 Type A & B, MIFare, Felica; ISO15693
Environmental Specification	
Enclosure	NEMA 3R / IP55, outdoor rated
Operating Humidity	Up to 95% non-condensing
Operating Temperature	-30 C~50 C (-22oF ~ +122oF)
Operating Altitude	≤ 2000m (6562ft)
Cooling Method	Forced air
Mechanical Specification	
Dimensions	(74.80" H x 31.50" W x 25.59" D) ±1%
Approximate Weights	≤ 500kg (1102lbs) ±1%
Mounting Option	Stand alone
Cable Length	16 ft standard, 23ft optional
Cable Organizer	Optional

semaconnect.com | 1(800) 663-5633

SEMACONNECT
A Blink Charging Company

180kW Free Standing DC Fast Charger

Features

- Combined Charging Systems (CSS)
- 4G and Ethernet Connectivity
- User Authentication: RFID
- Optional Cable Management Accessories
- Supports Smart Charging and Load Balancing
- Efficiency > 94%
- PF > 0.99 (APFC)
- Customization Available
- 7-inch LCD Screen with User Friendly Interface
- IK10 (Not including screen and RFID module), IP55, NEMA 3R
- OCPP 1.6 JSON (Upgradeable to 2.0)

Cable Management

Optional Cable Management accessories

Applications

- Parking Garages
- Commercial Fleet Operators
- EV Dealer Workshops
- EV Infrastructure Operators and Service Providers
- Gas/Service Stations

GENERAL NOTES:

1. SYSTEM IS DESIGNED WITH ELECTRIC VEHICLE SUPPLY EQUIPMENT (EVSE) SHOWN. WRITTEN APPROVAL FROM THE STAMPING ENGINEER IS REQUIRED FOR APPROVED ALTERNATE.

1863 W ALEXANDER ST.
[24] SOUTH
SALT LAKE CITY, UTAH 84119
801-975-8844 FAX 801-975-0509

HUNT ELECTRIC, INC.
QUALITY, INTEGRITY, PERFORMANCE, & VERSATILITY

DESIGN-BUILD SERVICES

REV.	DATE	DESCRIPTION
1	05-05-2023	UTILITY REVISIONS
2	06-20-2023	CITY COMMENTS

PROJ. MGR. T.WOOD

DRAWN BY: K.GYGI

ENGINEER: M.SHEETS

UNIQUE COLLISION
221 SOUTH 500 EAST, AMERICAN FORK, UT 84003
INFORMATION SHEET - EVSE

SCALE: N.T.S.

PERMIT REVIEW SET

PRINTED DATE: 08-30-2023

E-801

NOTICE: THE DESIGNS SHOWN AND DESCRIBED HEREIN INCLUDING ALL TECHNICAL DRAWINGS, GRAPHICS AND MODELS THEREIN ARE PROPRIETARY AND CANNOT BE COPIED, DUPLICATED OR COMMERCIALLY EXPLOITED, IN WHOLE OR IN PART, WITHOUT THE EXPRESS WRITTEN PERMISSION OF HUNT ELECTRIC INC. AVAILABLE FOR LIMITED REVIEW AND EVALUATION BY CLIENTS, CONSULTANTS, CONTRACTORS, GOVERNMENT AGENCIES, VENDORS AND OFFICE PERSONNEL ONLY IN ACCORDANCE WITH THIS NOTICE.