Cedar City

10 North Main Street • Cedar City, UT 84720
435-586-2950 • FAX 435-586-4362
www.cedarcity.org

CITY COUNCIL WORK MEETING
OCTOBER 4, 2023
5:30 P.M.

The City Council meeting will be held in the Council Chambers at the City Office, 10 North Main Street. The City Council Chambers may be an anchor location for participation by electronic means. The agenda will consist of the following items:

I. Call to Order

II. Agenda Order Approval

III. Administration Agenda
- Mayor and Council Business
  - Presentation by Oleksandr Lementovskyi
- Staff Comments
  - Swear in Patrol Officer II Kasen Lasson

IV. Public Agenda
- Public Comments

V. Business Agenda

Public

1. West Canyon Park renovations. Cedar City Rotary Club
2. Consider a vicinity plan for the Ridge at Cedar Trails Subdivision, 1900 S. South Ken Middleton Parkway. Platt & Platt/Don Boudreau
3. Consider a variance to the City Engineering Standards for modified curb, gutter, and sidewalk at 2928 W. Rock Ridge Circle. Roy Talmage Builders/Jonathan Stathis
4. Consider the installation of a 4-way stop at the intersection of 200 South & 1150 West. SUU/UDOT/Jonathan Stathis
5. Consider a variance to the City Engineering Standards for a driveway location at 672 E. Canyon Ranch Drive. L.R. Nelson Engineers/Jonathan Stathis
6. Consider an amendment to the City Traffic Ordinance to establish a No Parking zone in the vicinity of 672 E. Canyon Ranch Drive. L.R. Nelson Engineers/Jonathan Stathis
7. Approval of Final Plat of Copper Valley Townhomes PUD, Phase 1, in the vicinity of 200 North 4500 West. Go Civil/Randall McUne
8. Public hearing to consider revisions to the 2023-2024 fiscal year budget. Jason Norris

Staff

9. Reconsider Airport land lease rates. Tyler Galetka
10. Consider Surplus Auction items. Ryan Marshall/Corey Childs

11. Consider a resolution revising the City Engineering Standards regarding sewer improvements. Randy Clove/Jonathan Stathis
12. Consider the final change order for the Center Street Concrete Inlet/Outlet Structures project. Jonathan Stathis
13. Consider the Southern Utah ARPA Reuse Grant agreement with the Utah Division of Water Quality. Jonathan Stathis

Dated this 2nd day of October, 2023.

Renon Savage

Renon Savage, MMC
Cedar City Recorder

CERTIFICATE OF DELIVERY:

The undersigned duly appointed and acting recorder for the municipality of Cedar City, Utah, hereby certifies that a copy of the foregoing Notice of Agenda was delivered to the Daily News, and each member of the governing body this a 2nd day of October, 2023.

Renon Savage

Renon Savage, MMC
Cedar City Recorder

Cedar City Corporation does not discriminate on the basis of race, color, national origin, sex, religion, age or disability in employment or the provision of services.

If you are planning to attend this public meeting and, due to a disability, need assistance in accessing, understanding or participating in the meeting, please notify the City not later than the day before the meeting and we will try to provide whatever assistance may be required.

CEDAR CITY
COUNCIL AGENDA ITEM 2
STAFF INFORMATION SHEET

TO: Mayor and Council

FROM: Donald Boudreau

DATE: September 20, 2023

SUBJECT: Consideration of a Vicinity Plan for the Ridge at Cedar Trails Subdivision Located at 1900 South Ken Middleton Parkway.

Discussion:

At the regularly scheduled Planning Commission Meeting of September 20, 2023, the subject proposal received a **positive** recommendation (minutes attached). As required in the City's Subdivision Ordinance, once the Planning Commission recommends a vicinity plan for approval, the plan shall then be presented to City Council for your review and approval, or approval subject to alterations, or disapproval. The following is some general information concerning the proposed subdivision.

Developer-	Royal Oaks on the Green
General Location-	1900 South Ken Middleton Parkway
Area Land Use Zone-	R1
Number of Units-	18 Single-Family Lots

3. Subdivision- Vicinity Plan (Recommendation)	1900 S Ken Middleton Parkway The Ridge at Cedar Trails	Royal Oaks on the Green/ Platt & Platt

Dave Clark: 18 lot subdivision, bluff south of Holiday Inn Express. It is in conformance with Cedar Trails RDO, zoning is R1, ½ acre plus lots. Could be ¼ acre lots.
Isom: All in conformity with RDO?
Dave: Yes, .8 per acre. Very low density. Lot 2
Jonathan: I have looked over this infrastructure in the area. Sewer will need to run along frontage road. Master plan sewer line runs south, will be tied into the one that goes under I-15. That line will need to be put in place.
Adam: Will be city streets and city utilities.
Jonathan: Yes
Adam: Poor soil in the area, we know going into it.
Dave: Ken Middleton Parkway and 1900 South have been dedicated and will improve as we go.

Councilmember Isom motions for a positive recommendation for Vicinity Plan for The Ridge at Cedar Trails; Wilkey seconds; all in favor for unanimous vote.

THE RIDGE AT CEDAR TRAILS

WITHIN SECTIONS 27, 28, & 33, T36S, R11W, SLB&M

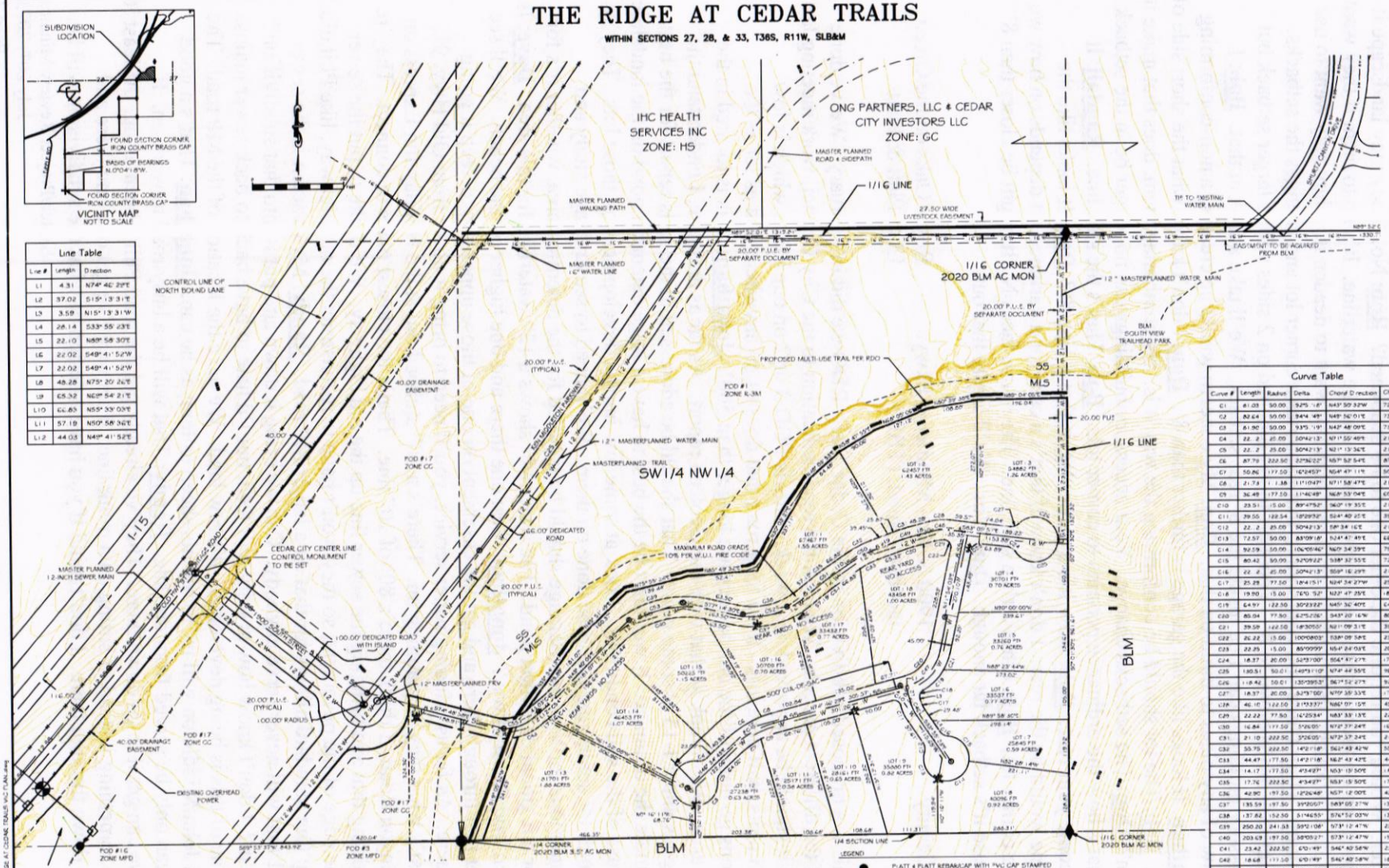

Line Table		
Line #	Length	Direction
L1	4.31	N74° 40' 29"E
L2	37.02	S15° 13' 31"E
L3	3.59	N15° 13' 31"W
L4	28.14	S33° 55' 23"E
L5	22.10	N89° 58' 30"E
L6	22.02	S49° 41' 52"W
L7	22.02	S49° 41' 52"W
L8	48.28	N75° 20' 26"E
L9	65.32	N62° 54' 21"E
L10	66.83	N55° 39' 03"E
L11	57.19	N50° 58' 36"E
L12	44.03	N49° 41' 52"E

Curve Table					
Curve #	Length	Radius	Delta	Chord Direction	Chord Length
C1	81.03	50.00	92°5'.18"	N43° 50' 32"W	72.45
C2	82.64	50.00	94°4'.49"	N49° 50' 01"E	73.55
C3	81.90	50.00	93°5'.19"	N42° 48' 09"E	73.05
C4	22.2	25.00	50°42'13"	N71° 55' 49"E	21.41
C5	22.2	25.00	50°42'13"	N21° 13' 36"E	21.41
C6	87.79	222.50	22°36'22"	N57° 52' 54"E	87.22
C7	50.86	177.50	16°24'57"	N54° 47' 11"E	50.68
C8	21.73	1.38	1110°47"	N71° 58' 47"E	21.70
C9	36.49	177.50	11°46'49"	N68° 53' 04"E	6030.11
C10	23.51	15.00	89°47'52"	N60° 19' 35"E	21.18
C11	39.55	122.54	18°29'32"	S24° 40' 25"E	39.36
C12	22.2	25.00	50°42'13"	S8° 34' 16"E	21.41
C13	72.57	50.00	83°09'18"	S24° 47' 49"E	66.36
C14	92.59	50.00	106°06'46"	N67° 34' 39"E	79.91
C15	80.42	50.00	92°09'22"	S38° 32' 55"E	72.03
C16	22.2	25.00	50°42'13"	S59° 16' 29"E	21.41
C17	25.28	77.50	18°41'51"	N24° 34' 27"W	25.16
C18	19.90	15.00	76°0'.52"	N22° 47' 25"E	18.48
C19	64.97	122.50	30°23'22"	N45° 36' 40"E	64.21
C20	86.04	77.50	63°5'.26"	S43° 20' 16"W	80.84
C21	39.59	122.50	18°30'55"	N21° 09' 31"E	39.41
C22	25.22	15.00	100°08'03"	S38° 08' 58"E	23.00
C23	22.25	15.00	85°09'99"	N54° 24' 03"E	20.27
C24	18.37	20.00	52°57'00"	S56° 47' 27"E	17.73
C25	140.51	50.01	149°5'.10"	N74° 44' 55"E	96.50
C26	118.42	50.01	135°39'53"	S67° 52' 27"E	92.63
C27	18.37	20.00	52°57'00"	N79° 35' 33"E	17.73
C28	46.10	122.50	21°53'37"	N60° 07' 15"E	45.83
C29	22.22	77.50	16°25'34"	N63° 33' 13"E	22.14
C30	16.84	177.50	5°26'05"	N72° 37' 24"E	16.83
C31	21.10	222.50	5°26'05"	N72° 37' 24"E	21.10
C32	55.75	222.50	14°21'18"	S62° 43' 42"W	55.60
C33	44.47	177.50	14°21'18"	S62° 43' 42"E	44.36
C34	14.17	177.50	4°34'27"	N53° 15' 50"E	14.17
C35	17.76	222.50	4°34'27"	N53° 15' 50"E	17.76
C36	42.90	97.50	12°34'48"	N57° 12' 00"E	42.82
C37	135.59	97.50	39°50'07"	N49° 05' 27"W	137.26
C38	137.82	152.50	51°46'55"	S74° 52' 03"W	133.18
C39	250.20	241.53	59°21'08"	N73° 12' 47"W	239.16
C40	203.69	197.50	58°05'27"	S73° 12' 47"W	194.78
C41	23.42	222.50	6°0'.49"	S46° 40' 58"W	23.41
C42	18.68	177.50	6°0'.49"	S46° 40' 58"W	18.67
C43	55.81	122.50	26°08'04"	N63° 46' 24"W	55.33
C44	98.42	200.00	28°11'46"	N60° 40' 36"W	97.43
C45	32.63	100.00	18°41'51"	S24° 34' 27"E	32.49
C46	106.74	100.00	62°5'.26"	S43° 20' 16"W	104.31
C47	37.63	100.00	21°53'37"	N60° 07' 15"E	37.41
C48	18.87	200.00	5°26'05"	N72° 37' 24"E	18.86
C50	50.11	200.00	14°21'18"	N62° 43' 42"E	49.98
C51	15.97	200.00	4°34'27"	N53° 15' 50"E	15.96
C52	138.16	175.00	51°46'55"	N74° 52' 03"E	132.83
C53	226.89	220.00	58°05'27"	N73° 12' 47"E	216.97
C54	21.05	200.00	6°0'.49"	N46° 40' 58"E	21.04
C55	96.84	100.00	55°51'10"	N77° 26' 27"E	93.10

NOTES:

1. THIS PROPERTY IS ZONED R-1.
2. THIS SUBDIVISION IS WITHIN PODIR2 OF THE CEDAR TRAILS RDO, A RESIDENTIAL DEVELOPMENT OVERLAY THAT WAS APPROVED BY THE CEDAR CITY COUNCIL AS ORDINANCE No. 0322-23 ON MARCH 23, 2023.
3. THE MAXIMUM ALLOWED UNITS FOR THE RDO IS 1.5 SINGLE FAMILY LOTS.
4. THE PROPERTY IS LOCATED IN FLOOD ZONE C. AREAS OF MINIMAL FLOODING FLOOD INSURANCE RATE MAP, IRON COUNTY, UTAH (UNINCORPORATED AREAS), COMMUNITY PANEL NUMBER 490073 0900 B, EFFECTIVE DATE JULY 17, 1986.
5. SOILS AREA: THIS PROPERTY CONTAINS SUSPECT SOILS AND HIGHLY SUSPECT SOILS AND MASSIVE LANDSLIDE AREAS PER THE CEDAR CITY HYDROCOMPACTION SUSCEPTIBILITY MAP. DUE TO POOR SOIL CONDITIONS, ADDITIONAL SOILS AND GEOLOGIC HAZARD TESTING AND MITIGATION SHALL BE REQUIRED WITH DEVELOPMENT.
6. AIRPORT DISCLOSURE: THE MINOR LOT SUBDIVISION FALLS OUTSIDE OF THE CEDAR CITY REGIONAL AIRPORT INFLUENCE ZONES.
7. CITY WATER IS AVAILABLE ALONG OLD HIGHWAY 91 APPROXIMATELY 1,800 FEET NORTH OF THE NORTH LINE OF THE PROPERTY AND EAST 475 FEET IN SHURTZ CANYON DRIVE. CITY SEWER IS AVAILABLE TO THIS PROPERTY SOUTHWEST OF THE PARCELS ALONG THE WEST SIDE OF OLD HIGHWAY 91, APPROXIMATELY 1 MILE FROM THE SOUTHWEST CORNER OF THE PROPERTY.

NOTES CONTINUED:

8. THIS SUBDIVISION LIES WITHIN THE WILDLAND URBAN INTERFACE AREA (WUI) AND LIES 3.6 MILES (BY ROAD) FROM THE NEAREST FIRE STATION.
9. BEARINGS BASED ON THE CEDAR CITY COORDINATE SYSTEM AND GPS CALIBRATION.
10. VERTICAL ELEVATION DATUM IS NGVD 29.
11. FRONTAGE ROAD RIGHT-OF-WAY LINES WERE ESTABLISHED FROM EXISTING RIGHT-OF-WAY MARKERS AND UDOT RIGHT-OF-WAY MAP INFORMATION PER UDOT RECORDS.
12. ON SITE STORM WATER DETENTION SHALL BE REQUIRED EITHER AS A LOW IMPACT DEVELOPMENT PLAN ON EACH LOT OR AS A DETENTION POND FOR THE WHOLE SUBDIVISION. RECOMMENDATIONS SHALL BE PROVIDED WITH THE SOILS REPORT AND/OR THE PROJECT DRAINAGE STUDY.
13. FURTHER ANALYSES BY THE CITY IS REQUIRED TO INSURE THE REQUIRED WATER FLOWS FOR THE SUBDIVISION.

PLATT & PLATT, INC
CONSULTING CIVIL ENGINEERS & LAND SURVEYORS
195 N. 100 E.
CEDAR CITY, UT 84720
TEL: (435) 586-6151
FAX: (435) 586-8567
EMAIL: PLATT@INFOWEST.COM

REVISION	DESCRIPTION
2-20-23	CITY PRELIMINARY SITE REVIEW
DATE	
DATE	
DATE	

THE RIDGE AT CEDAR TRAILS
WITHIN SECTION 27, 28, 33, T. 36 S., R. 11 W., SLB&M
CEDAR CITY CITY, IRON COUNTY, UTAH

PROPERTY OWNER:
ROYAL OAKS ON THE GREEN, LLC
P.O. BOX 10
FOUNTAIN GREEN, UT 84632

DRAWN BY: D.M.C./MAZ
CHECKED BY: R.B. PLATT
DATE: Sep 05, 2023
SCALE: 1" = 100'

PAGE: 1 OF 1

those 2 lots. **Jonathan**: I had a similar comment about the utilities. They're already using the water meter. Would you require the other one to be deadened? **Rob**: No. They may landscape it or put something on there where they might want to use the waterline. It's up to them if they want to deaden it. Obviously, they've built on it and may not want to deaden it. They may want to use it in the future. **Don**: Once you combine it, that becomes a corner lot and changes the setbacks. The rear setback drops down to 8'. You start to get pinched on 2 sides with a larger setback but your accessory buildings can't be inside the 8' rear setback. We'll take a look at that. **Bob**: I don't know of any plans to build on that. **Don**: My concern would be creating a non-conforming lot. **Jonathan**: It looks like the garage is further than 8'. **Don**: I don't know what the short side of the lot is. **Bob**: The lot should be conforming the way it is. By combining them, does that make it a problem? **Don**: The setbacks change. Your accessory buildings can no longer be in the setback of 8'. That's how the ordinance pertains to corner lots. **Bob**: That's the side line. **Randall**: It could become your rear. **Bob**: Now it's a corner lot, is that E line 8'? **Don**: It looks like the easterly one would be the rear. I don't know if that's a case for a variance. It depends on how we look at the corner lot. **Bob**: I think it's a side line. The house faces N. It might be closer than 8' now because it's setback far enough. **Don**: Yes. We'll figure that out.

3.	Subd. – Vicinity	1900 S. Ken Middleton Pkwy. Jacobson Subd. (TBD)	Royal Oaks on the Green LLC/Platt & Platt

Dave: This is a proposed subdivision in the Cedar Trails RDO we did in February. We've done zoning of the different parcels. We took the road dedication to the City Council work meeting last night and it should be approved next week. This is POD 3 or 2 on our RDO, which is low density,18 units, half acre lots. It's a long road that doesn't go anywhere, but as far as the intersections go none of the cul-de-sacs are longer than 500'. **Jonathan**: This is located in the landslide area. We'll look at that with the Geotech report. As far as drainage, I understand the drainage goes under I-15 at some point. That should be addressed in the soils report for the best way to handle the drainage. It wouldn't be the best to have a large detention pond on the landslide area because of the soil conditions. Look at some low impact development on those lots. They're large enough for something could be done on them. We'll need to see drainage study and recommendations for how the drainage should be handled for the detention area, whether it's for each lot or a regional detention pond. The water MP shows a 12" waterline for this area. **Dave**: Is that in Ken Middleton Pkwy.? **Jonathan**: Yes; one there and one higher on the bench. We'll see how to get that through there and get the easement on one of those upper lots to keep it going through there. As far as bringing water service, you'll need to bring it down from Old Hwy. 91. **Dave**: That's what they're planning on. There's a 10" stubbed out at the Holiday Inn Express on Shurtz Canyon Road. I think there's 80' of 10" line. That's the closest place to connect. They're planning doing that and bringing the sewer line up the old highway. We'd like to put the sewer line off the edge of the pavement, so they won't have to reconstruct the old highway, like Phil did. **Jonathan**: Our standard allows for that on a larger MP road. **Randy**: My concern is the sewer main at 91 that will never serve anybody. Can we bring it down and put it into that subdivision? Will it tie in? I don't know how gravity will feed, but I'd hate to have back to back sewer mains. **Dave**: None of this is being developed. It's raw land. We have the location of the MP road. The big parcel John Middleton will try to run his sheep as long as he can. **Jonathan**: That's a good point. It can only be served from one site. **Randy**: That will be a busy road to work on. If anyway we can get it to go down there. They've already got the road Phil's been using. At least it will serve something instead of sitting on a trunk line. This way I've got one line there and running it down through there. I don't mind if you have a design of what the subdivision will be.

I can catch that and go into there. That's a better solution than having 2 lines to maintain and have 1 manhole. **Dave**: I'll talk to the Middleton's. It will benefit them in the long run. **Randy**: They would only have to pay for 1 line instead of 2. **Dave**: If the city will go for that and put it in the Ken Middleton Pkwy. to eliminate it in the old highway. **Randy**: We won't have anything on I-15. This makes sense to me. **Jonathan**: We'll look at the elevations so the properties up front could drain that way. It shows as a 12" MP line. We'll discuss that more. Make sure to check if you're staying in the density of the RDO. Which road is going to be improved going into the subdivision? I assume it's the one with the roundabout. **Dave**: Yes. The developers, who are 3 brothers and their partners, are working on a design for some apartments in this middle area. The cost of the roads will be shared. They have some interest in the commercial. Things will happen here. We have to bring water & sewer to the site. They'll have to improve part of the road and tie off the roundabout to come up the hill. We'll work with you as far as whatever center + 12 looks like for each development. **Randy**: Where my lift station is at, that's owned by IHC. **Dave**: The sewer line will be in the highway. **Randy**: Down to where your cul-de-sac is. **Dave**: According to the RDO, we can put 250 apartments there. There will be a 2nd road unless this road continued out. But talking to the partners they wanted to figure out how they wanted to do the commercial lots and how big they want that corner lot will be and a 55' road as a second access. **Clay**: Is the driveway coming off the roundabout private? **Dave**: That will be a city street. **Jonathan**: This area is dry for the water acquisition fee. We'll talk about what the fees will be. There's some conservation options and they may want to limit how much water they're putting on the lots. We'll discuss that when they get to final plat. This area is in the WUI zone and just indicate the distance from the nearest fire station. It looks like you'll have some double fronted lots there. Look at the fencing requirements. **Dave**: I talked to them on that. These are steep, so they'd rather not put a fence there. Is that a variance from City Council? **Jonathan**: A change was made to the ordinance, but I don't know how that works. **Dave**: PUD perimeter fencing is applied to R-1. **Don**: There's a change the ordinance that said to put a 6' fence on double fronted and they changed it to choose the front or rear as we plat it. I can't remember it's a through lot which would be a 120" on both sides. I'll just have to read it. **Dave**: That will be at the top of a steep hill. It's pointless for a fence to provides privacy and limited access, the terrain will provide both of those. **Don**: Is that a road breaking off to the S? **Dave**: No. There's the trail and that dashed line is the zoning boundary between commercial and residential. We have to decide how to break up the commercial. It will probably end up being the lot line. **Don**: Where's the pod line? **Dave**: It's the dashed line. **Don**: That it break that piece off? **Dave**: Yes. This is one piece now, but to qualify for our minor lot, we had to have ' of frontage on the street. It will get broken off when we do the subdivision. This road will be dedicated. **Clay**: Are they going to build the trail through there or give us an easement? **Dave**: We're working on the details of that. The BLM had expressed an interest to put a trail through there, but we'll talk to them. **Clay**: Are there any existing trails going across the property? **Dave**: There's one that comes up the E & S property line. There's good access to the BLM trails. The Middleton's didn't want to encumber their property with a trail. It will be an easement or something. We'll decide before final plat. **Mike Shurtz**: What kind of road grades were you thinking of? **Dave**: **Mike S.**: You can't go over 10. Not in the WUI zone. The limit is 10%. **Dave**: We were just going off city standard up to 12%. **Mike S.**: Let's talk some more. The fire code's pretty firm. I don't know how we've gotten away from that. That's the max we can do. Jonathan did say you're in the WUI. You're going to have fire flow in the upper cul-de-sacs. **Dave**: That's why the city wants to bring in another line. **Jonathan**: We'll run a model and see what that looks like as you get up into those higher elevations. The BLM is looking at doing improvements at the trail head. Reach out to Dave Jacobsen to see what the interface and developers are doing. Planning on having those discussions

on tying in the trails.

4. Vacate Easements & ROW approx. 60 S. Main Street Nelson/Ensign Engineering
Hampton Inn Hotel

Jaxon Allred: We talked about this a bit. This is a parking garage and hotel. The hotel is owned by the Burgesses. The garage is owned by Steve Nelson. We went through the ALTA. There are various easements across these properties. The ones that are highlighted red pertain to the city. The one E-W is an easement for vehicles to get to the N-S one. There's an existing ROW easement. There's a roadway that's 9' in the middle and the next is an existing Dixie Power easement. Together they're 15' that runs into the parking garage and the hotel. There's an existing power easement on the SE corner. It goes underground to the city lighting system. the power would need to be rerouted around the hotel, above or below. We're looking to get the easements vacated. Steve's on vacation. We'll need to get with him and get the legal descriptions for the next PC meeting. We're trying to vacate the easements under the things that will be built. **Clay**: My concerns are those are not easements but owned by another party. If they are, that would make it a disposal. There are easements written there. You need to get with the title company and get the underlying deeds. Chase the title back to patent. The deeds I've found eliminate or exclude the 8'-9' on both sides of the center lot line. If that's the case the underlying owner still owns that property. I know your owner thinks he owns it, but we need to be definitive. **Jaxon**: He hasn't responded to our emails. **Clay**: If that's the case it's not an easement. You have that all the way from Center St. to old College Way, 12' on the N side of the Vista Monte property in question too. **Jaxon**: I saw the (2) N-S lines. It might be the 20' all the way down. We're a bit confused. **Clay**: When you look at the old deeds, they specifically call it to that lot line. It leaves an owner there somewhere. **Jaxon**: Our task is to get ahold of Steve and track down the easements and ownership to be vacated or moved. This is all we could find out. **Clay**: There could be easements written on top of it. **Jaxon**: We'll just have to wait until we talk to Steve. **Dale Patrick**: For the one above we have stuff running across there. But the one going E-W, you may want to get a Blue Stake on that to see if there's something there. Our records don't show anything. If you want to vacate that, get with me later and I can get you the contact for the road and get that vacated. **Jaxon**: There's various easements with the utilities. **Jonathan**: Is the power easement for RMP? **Jaxon**: It says existing Dixie Power. It looked like it was from the early 1900's. **Jonathan**: It may be old. I didn't think we had Dixie Power up here.

5. Ordinance Text Amendment Section 32-8-D-14 Platt & Platt
PUE Requirement in PUD

Mike Platt: We've been working with Jonathan and Don on this for a couple months. We want to have the opportunity to remove any easements that we think are unnecessary in a PUD provided we have this information up front. The thing is a 26' road give 10' easement on each side is not a lot of real estate. We just want to create something that we all can live with. **Jonathan**: I don't know how the utilities feel about this. These are private utilities, and there's really nothing that's city infrastructure. **Dale**: In Hurricane, we have to be on the W or N side with sewer and water on the opposite side. Is there a requirement here? **Jonathan**: No, even in the road. The roads are a PUE. **Mike P.**: What this boils down to is we know in Cedar Bend nobody uses their garage to park in. We count that as parking now we have parking problem. By giving them 4 parking stalls on the opposite side of the road to keep their stuff parking in their garage and keep people off the public ROW. if PUE eats up our storage units. **Clay**: The last sentence in D to guarantee, RMP

CEDAR CITY
CITY COUNCIL AGENDA ITEM 3
STAFF INFORMATION SHEET

To: Mayor and City Council

From: City Engineer

Council Meeting Date: October 4, 2023

Subject: **Consider a variance to the City Engineering Standards for a modified curb, gutter, and sidewalk at 2928 W. Rock Ridge Circle.**

Discussion: The owner of the property located at 2928 W. Rock Ridge Circle is requesting a variance from Details C1 and C3 of the City's Engineering Standards for their driveway access. A new single-family home has been constructed on the property which is located in Saddleback Ridge Subdivision Phase 4. The driveway that was constructed behind the sidewalk leading up to the home is too steep, which causes vehicles to scrape as they go up the driveway. It is important to note that the curb, gutter, and sidewalk located within the City right-of-way was designed and constructed correctly according to City engineering standards.

The owner is requesting a variance to the City Engineering Standards in order to modify the existing curb, gutter, and sidewalk at the driveway approach. The contractor, Roy Talmage Builders, has proposed raising the flowline of the gutter by 2 inches as shown in the attached exhibits. The lot is located at the end of the cul-de-sac. Typically, raising the flowline of the gutter would cause problems with the drainage. However, in this case, the drainage flows around the cul-de-sac in either direction. It appears that this change would have minimal effect on the drainage patterns as long as the flowline extends to the high point in the cul-de-sac. We need to make sure that there is positive drainage around the cul-de-sac with no standing water. Also, the curb, gutter, and sidewalk would need to transition with a taper to match existing concrete elevations on both sides of the driveway.

In City Ordinance section 32-9(B), it states as follows:

"… where the subdivider can show that a provision of these general requirements and design standards would cause unnecessary hardship if strictly adhered to and where, because of

topographical or other conditions peculiar to the site, in the opinion of the City Council, a departure may be made without destroying the intent of such provisions, the City Council may authorize a variance. Any variance so authorized shall be stated on the Final Plat and the reasons for such departure shall be enter in writing in the minutes of the City Council."

If the variance request is approved, it would allow the driveway design to be modified as requested by the property owner. The following items are attached to this information sheet:

- Exhibits provided by Aaron Leeds of Roy Talmage Builders.
- Detail C1 – Curb & Gutter detail. This subdivision was constructed with "Type A" curb & gutter.
- Detail C3 – Driveways detail.

Please consider whether to approve a variance from Details C1 and C3 of the City Engineering Standards for a driveway location at 2928 W. Rock Ridge Circle.


Proposed area
of slope change

This is the impacted area that we are proposing to change in approach / curb / gutter

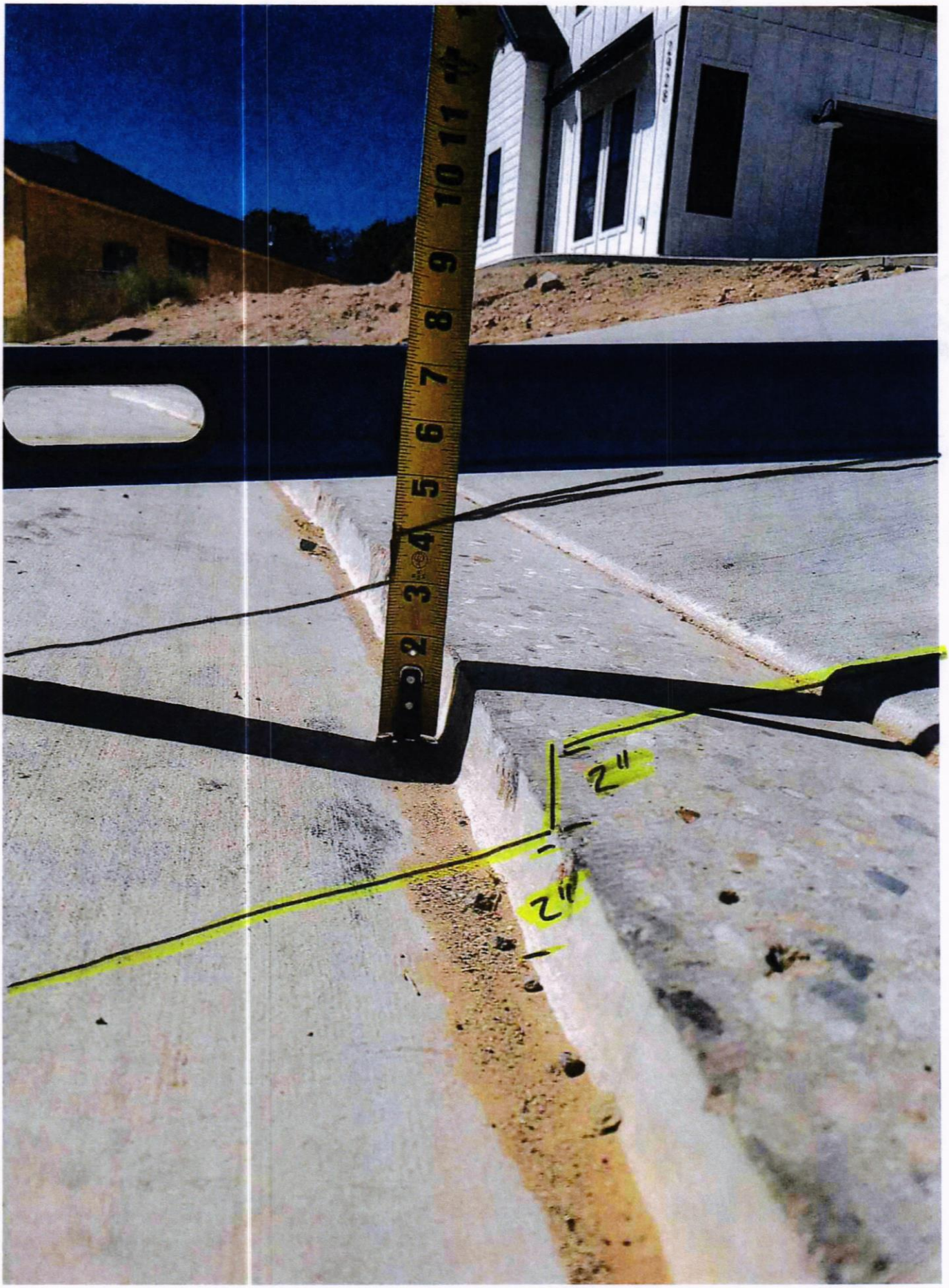
2"
2"

PROPOSED WORK: 2" INCREASE FROM ROADSIDE OF GUTTER TO CURB WHICH WOULD MOVE CURB HEIGHT 2" UP TO ACCOMIDATE FOR A LESS STEEP APPROACH

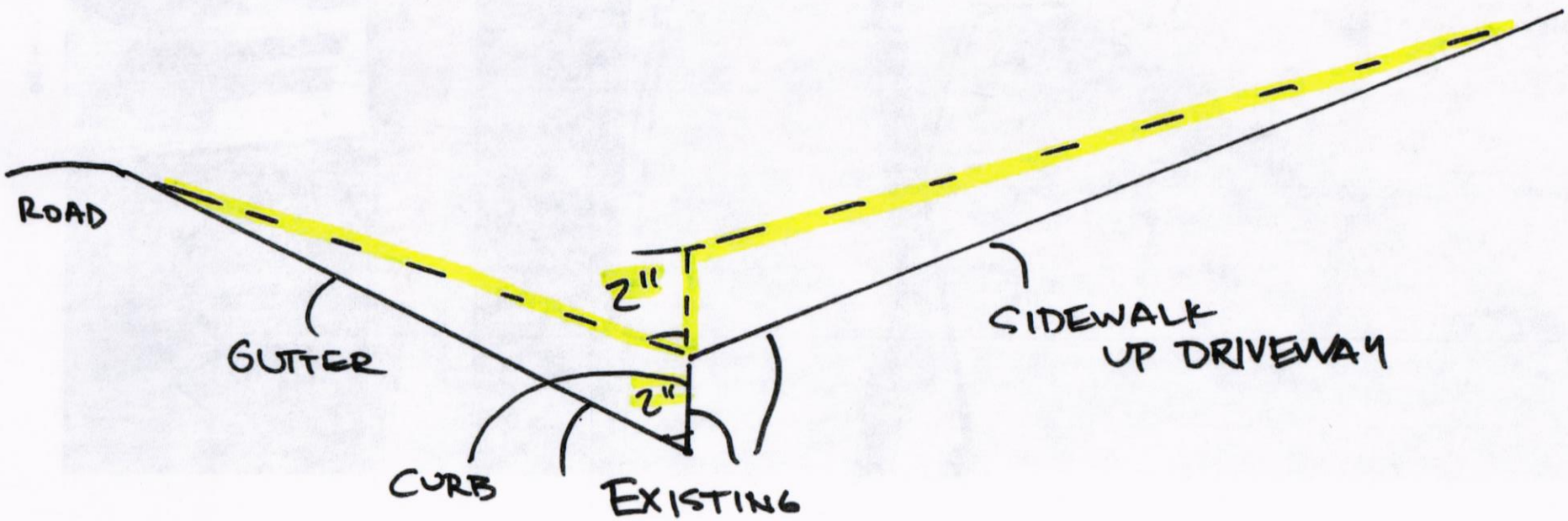


House
SIDE WALK
GUTTER
FIRE HYD

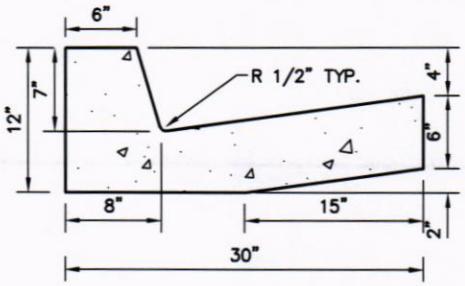

30" CURB & GUTTER

0.57 YD.^{3}/10 LINEAR FT.

TYPE A

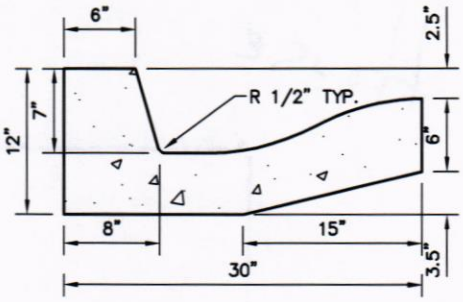

30" IRRIGATION C&G

0.57 YD.^{3}/10 LINEAR FT.

TYPE B

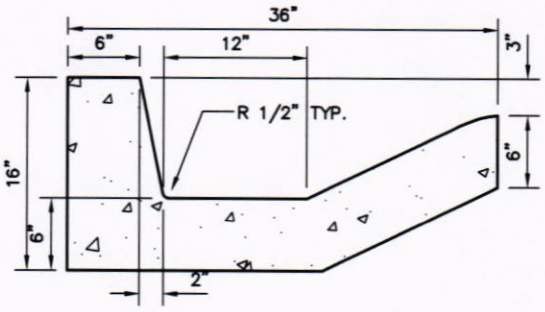

36" CURB & GUTTER

0.81 YD.^{3}/10 LINEAR FT.

TYPE C

NOTE:

ALL CURB AND GUTTER TYPES SHALL HAVE:

1. CONTRACTION JOINTS EVERY 10' O.C. 1/2" DEEP.
2. EXPANSION JOINTS AT THE P.C. AND P.T. OF A STREET INTERSECTION CURB RADIUS RETURN.

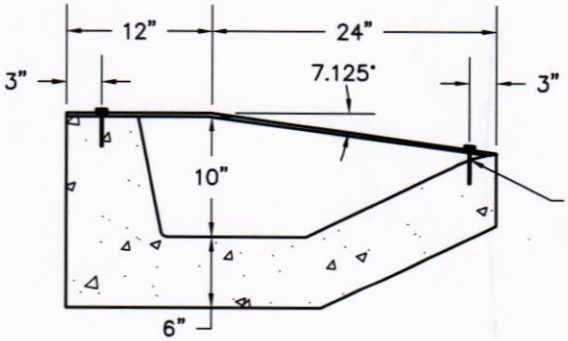

COVERED DRIVE OR SIDEWALK ACCESS RAMP*

USING 1/2" LARGE PATTERN INLAND 4-WAY PLATE (GALVANIZED PAINTED OR HOT DIPPED) LENGTHS TO BE SAME AS DRIVEWAY OR SIDEWALK WIDTHS

* USE ONLY WHEN APPROVED BY THE CITY ENGINEER.

SHEET NO. C1	CURB & GUTTER	REVISIONS (DATE / DESCRIPTION / BY)	CEDAR CITY, 10 NORTH MAIN STREET, CEDAR CITY, UTAH 84720, PH. (435) 586-2963	SCALE: N.T.S.	DATE: 7/2021
FILE: C01				DRAWN: T.B.M.	CHECKED: J.A.S.

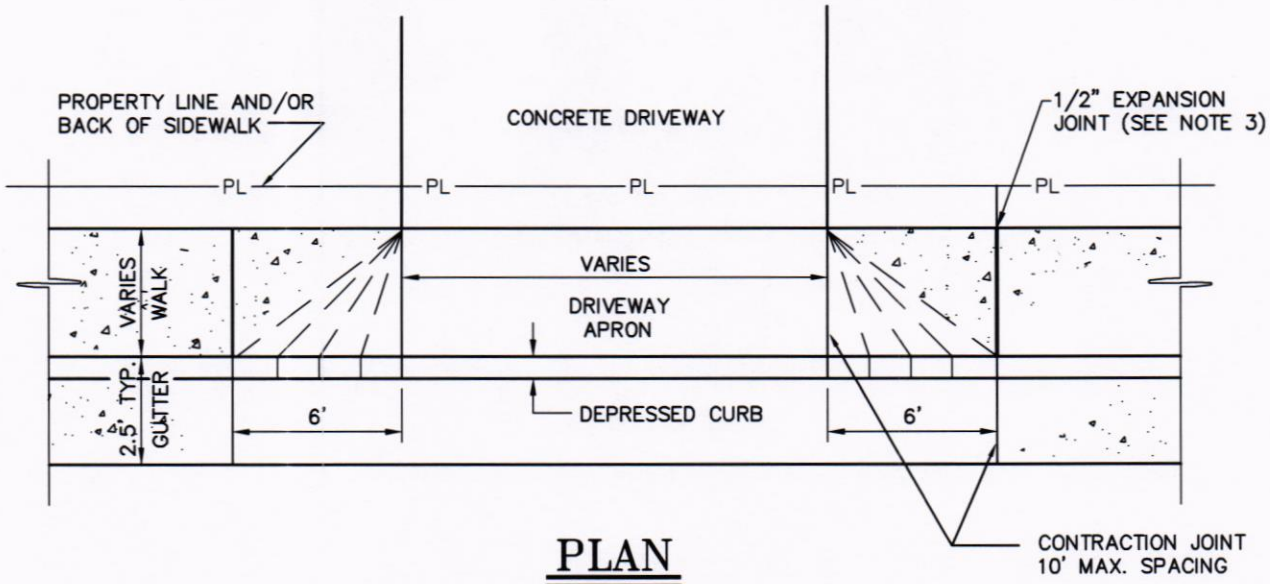

PLAN

N.T.S.

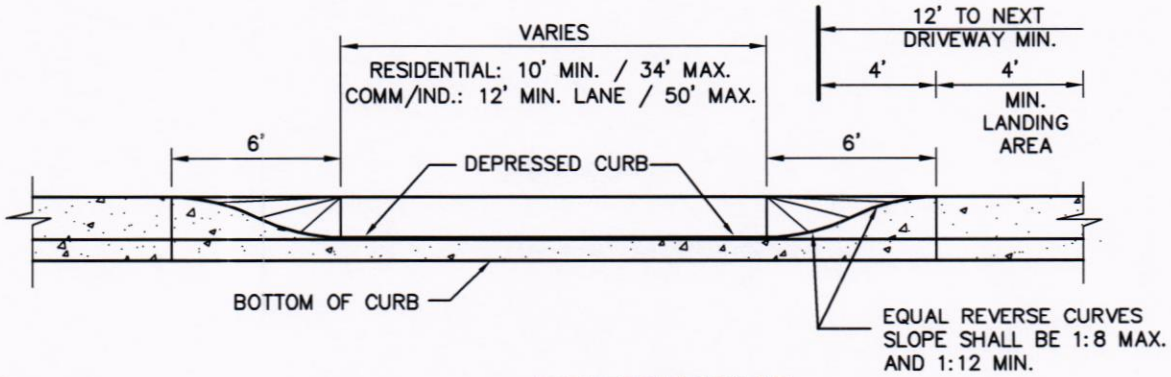

ELEVATION

N.T.S.

NOTES:

1. #4 BARS @ 16" O.C. BOTH WAYS REQ'D.
2. DRIVEWAY CUTS IN EXISTING CURBS SHALL BE SAW CUT TO DIMENSIONS SHOWN, BREAKING-OFF OF CURB BACKS WILL NOT BE PERMITTED.
3. 40' EXPANSION JOINT SPACING IN SIDEWALKS TO CONTINUE THROUGH DRIVEWAYS.
4. ALL CONCRETE TO BE CLASS B (4000 PSI).
5. SIDEWALKS AT DRIVEWAY APPROACHES BEHIND A TYPE D LOW PROFILE CURB MUST BE 6" THICK (REINFORCED WITH #4 BARS @ 16" O.C. BOTH WAYS).

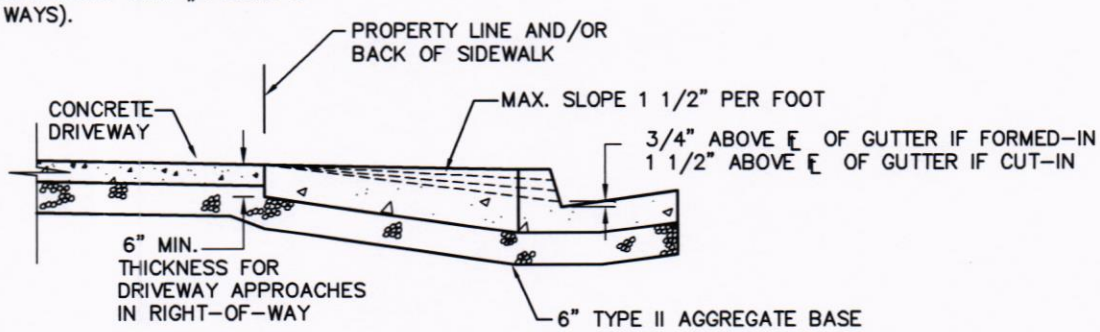

SECTION

N.T.S.

SHEET NO.		REVISIONS				
C3	DRIVEWAYS	DATE	DESCRIPTION	BY	CEDAR CITY	SCALE: N.T.S. / DATE: 7/2021
FILE: C03		7/2021	CLARIFIED DRIVEWAY WIDTHS, UPDATED NOTES	J.A.S.	10 NORTH MAIN STREET CEDAR CITY, UTAH 84720 PH. (435) 586-2963	DRAWN: T.B.M. / CHECKED: J.A.S.

CEDAR CITY
CITY COUNCIL AGENDA ITEM 4
STAFF INFORMATION SHEET

To: Mayor and City Council

From: City Engineer

Council Meeting Date: October 4, 2023

Subject: **Consider the installation of a 4-way stop at the intersection of 200 South & 1150 West.**

Discussion: Southern Utah University (SUU) has requested that a 4-way stop be installed at the intersection of 200 South and 1150 West. This intersection has become much busier recently as the new buildings on the SUU campus have extended to the west. In addition, SUU has seen an increase in traffic as students are now required to go to the University Post Office to pick up packages. This has caused an increase in pedestrian traffic at the intersection. There are also sight distance issues going south due to a curve in the road and landscaping on the southeast corner of the intersection.

The Utah Department of Transportation (UDOT) prepared an "All-Way Stop and Pedestrian Crosswalk Study" in 2018 for the intersection of 200 South and 1150 West. The study showed that based on the normal study criteria it does not warrant a 4-way stop; however, there are other criteria that have been identified showing the need for the 4-way stop at this location. UDOT has provided information regarding other criteria to be considered.

There are currently stop signs on the east and west legs of the intersection. This proposal would add stop signs on the north and south legs. Since the City controls two legs of this intersection, the City Council needs to consider whether to move forward with the installation of a 4-way stop. UDOT and SUU are both supportive of a 4-way stop at this intersection.

If the 4-way stop is approved, Cedar City will be responsible for supplying and installing the following items:

- 36-inch flashing stop sign to be installed on the southeast corner of the intersection.
- 36" x 36" Stop Ahead (W3-1) warning sign with a 300 ft. distance plaque to be installed 300 feet in advance of the intersection.

UDOT has agreed that they will paint the stop bars for the intersection on both the northbound and southbound approaches. UDOT has also agreed to supply and install a flashing stop sign on the northwest corner of the intersection.

The Cedar City Police Chief, Darin Adams, has reviewed the proposal and has expressed support for the 4-way stop.

The following items are included with this fact sheet:

1. Emails from Ben Johnson indicating SUU's request for the installation of the 4-way stop.
2. Email from Jared Beard outlining UDOT's reasoning for their support of the installation of the 4-way stop.
3. Email from Chief Darin Adams regarding the request.
4. Exhibits showing the recommended installation of a new 4-way stop at the intersection of 200 South and 1150 West.
5. A copy of the "All-Way Stop and Pedestrian Crosswalk Study" report prepared by UDOT.

Please consider whether to install a 4-way stop at this intersection and direct staff accordingly. Thank you.

Jonathan Stathis

From: Ben Johnson <johnsonb@suu.edu>
Sent: Monday, September 25, 2023 8:34 AM
To: Jonathan Stathis
Cc: Shad Beckstrand; jaredbeard@utah.gov; tmunson@utah.gov; Darin Adams
Subject: Re: [EXTERNAL]: 4 Way Stop

Jonathan,

Thank you for the note. I thought this had already been approved. Please, if any counsel member would like, I would be happy to meet with them at that intersection for a few minutes to help them understand the need. We now have students walking to the University Post Office to pick up packages and have to cross that intersection. The University is pushing this issue, not Udot. Udot is really doing us a favor here and in efforts to be good partners have agreed to fund and install their portion of the 4 way stop.

Please let me know what I can do to help. This is a desperate need. I personally have witnessed an accident there and there are near misses all the time. It is a dangerous intersection as it stands. I am happy to come to City Council if warranted.

Thanks

Ben

Ben A. Johnson | Assistant Vice President
FACILITIES MANAGEMENT, SOUTHERN UTAH UNIVERSITY
FM 102 | (435) 559-8800

On Fri, Sep 22, 2023 at 9:57 PM Jonathan Stathis <jstathis@cedarcity.org> wrote:

Ben – Thank you for your email. The City Council will need to approve the 4-way stop. My only concern is that UDOT's 2018 study shows that the 4-way stop is not warranted (see attachment).

Jared - Does UDOT have more current information showing that a 4-way stop is warranted at the intersection of 200 South and 1150 West, or other information that I could provide to the City Council?

The next City Council work meeting is on Wednesday, October 4th. I would like to have further information from UDOT prior to the meeting. Thank you.

Thanks,

Jonathan Stathis, P.E.

Cedar City Corporation

Cell Phone: (435) 463-0412

jstathis@cedarcity.org

From: Ben Johnson <johnsonb@suu.edu>
Sent: Thursday, September 21, 2023 1:59 PM
To: Jonathan Stathis <jstathis@cedarcity.org>
Cc: Shad Beckstrand <shadbeckstrand@suu.edu>
Subject: [EXTERNAL]: 4 Way Stop

Jonathan,

I wanted to inquire on the schedule of the 4 way stop at University and 1150 west. The intersection continues to be more and more problematic. UDot indicated they have ordered their stop sign and I wanted to check to see if the city has coordinated with Udot and will be ready to install your side of the 4 way stop in conjunction with UDot's project. Please feel free to reach out with any questions or concerns.

Thanks

Ben

Ben A. Johnson | **Assistant Vice President**
FACILITIES MANAGEMENT, SOUTHERN UTAH UNIVERSITY
FM 102 | (435) 559-8800

Jonathan Stathis

Subject: FW: [EXTERNAL]: Re: 4-way stop warrant
Attachments: 18-TS1204-04-ST,PED 0289 (MP 1.07).pdf

From: Jared Beard <jaredbeard@utah.gov>
Sent: Friday, September 29, 2023 10:42 AM
To: Jonathan Stathis <jstathis@cedarcity.org>
Cc: tmunson@utah.gov; Anne Ogden <anneogden@utah.gov>; Darin Adams <adarin@cedarcity.org>; Rachel Morris <rachelm@utah.gov>; Rashelle Crowther <rcrowther@utah.gov>
Subject: [EXTERNAL]: Re: 4-way stop warrant

Jonathan,

UDOT is supportive of moving forward with a 4-Way stop at the intersection of 1150 W (SR-289) and 200 S in Cedar City.

UDOT did perform a study back in 2018 in which the location did not meet the warrants for a 4-way stop due to vehicular or active transportation use. However, on page 4 of the document there was a recommendation due to sight distance issues at the intersection:

"*Intersection sight distances were found to meet design minimums for all movements based on posted speed limits, with exception of the westbound left-turn movement. This is due to a bridge and a tree on the southeast corner of the intersection obscuring the view for the westbound left-turn movement. UDOT should remove these objects to increase sight distances for the westbound left-turn movement.* ***If these objects cannot be removed all-way stop control should be implemented.***"

Here is a picture of the sight distance issue discussed. The "garden" area with the little bridge appears blocks sight around the curve on the SB approach.

In addition on page 4 of he document there is another statement about confusion at the intersection that reads as follows:

"Minimal confusion regarding right-of-way was observed during the data collection period. If confusion had persisted in observed driver behavior, ***all-way stop control could potentially alleviate this issue by requiring all movements to stop.****"*

While in the original study it appears that this location functioned reasonably well, there appears to be more confusion now that a 4-way stop condition has been implemented nearby at 1150 W and Center St. Vehicles have been observed treating the intersection as a 4-way stop even though it has not been implemented as yet. Again, this may be due to the recent changes at 1150 W and Center St. and due to the fact that many other intersections along 1150/1100 W Corridor are set up as 4-way stop conditions (see 400 S, 600 S, and 800 S).

Additional changes have been implemented at SUU recently that have increased traffic at this intersection as well. Packages for students need to be picked up at the SUU Postal building that is on the West leg of the intersection. Parking is also available on the NW corner of the intersection with no SUU parking permit required. As SUU continues to grow, the parking lot is more utilized leading to more pedestrian traffic.

For these reasons UDOT recommends that this intersection be converted to a 4-Way stop in partnership with Cedar City. UDOT recommends installing perimeter lit stop signs for both the NB and SB approach along with a "Stop Ahead (W3-1)" sign in advance of the SB stop sign due to the curve and sight distance issues. UDOT is willing to come in at the time of the installation of signs and paint the necessary stop bars for the intersection on both NB and SB approaches.

Please let me know if you have additional questions regarding this recommendation.

Jonathan Stathis

From: Darin Adams
Sent: Monday, September 25, 2023 9:07 AM
To: Jonathan Stathis; Ben Johnson
Cc: Shad Beckstrand; jaredbeard@utah.gov; tmunson@utah.gov
Subject: RE: [EXTERNAL]: 4 Way Stop

Jonathan, and all. I don't have any concerns with this proposal. I can see the potential benefit(s) of a sign at this location.

From: Jonathan Stathis <jstathis@cedarcity.org>
Sent: Monday, September 25, 2023 9:02 AM
To: Ben Johnson <johnsonb@suu.edu>
Cc: Shad Beckstrand <shadbeckstrand@suu.edu>; jaredbeard@utah.gov; tmunson@utah.gov; Darin Adams <adarin@cedarcity.org>
Subject: Re: [EXTERNAL]: 4 Way Stop

Ben - Thank you for your email. We still need to get City Council approval. I appreciate the further information about the traffic & pedestrian concerns at this intersection. Can you please let me know who you've been working with at UDOT?

Jared - Can you please verify that we don't need to meet warrants in order to install the 4-way stop at this location?

Chief Adams - do you have any concerns moving forward to City Council with this proposal?

Thanks,
Jonathan Stathis

Get Outlook for Android

From: Ben Johnson <johnsonb@suu.edu>
Sent: Monday, September 25, 2023 7:33:40 AM
To: Jonathan Stathis <jstathis@cedarcity.org>
Cc: Shad Beckstrand <shadbeckstrand@suu.edu>; jaredbeard@utah.gov <jaredbeard@utah.gov>; tmunson@utah.gov <tmunson@utah.gov>; Darin Adams <adarin@cedarcity.org>
Subject: Re: [EXTERNAL]: 4 Way Stop

Jonathan,

Thank you for the note. I thought this had already been approved. Please, if any counsel member would like, I would be happy to meet with them at that intersection for a few minutes to help them understand the need. We now have students walking to the University Post Office to pick up packages and have to cross that intersection. The University is pushing this issue, not Udot. Udot is really doing us a favor here and in efforts to be good partners have agreed to fund and install their portion of the 4 way stop.

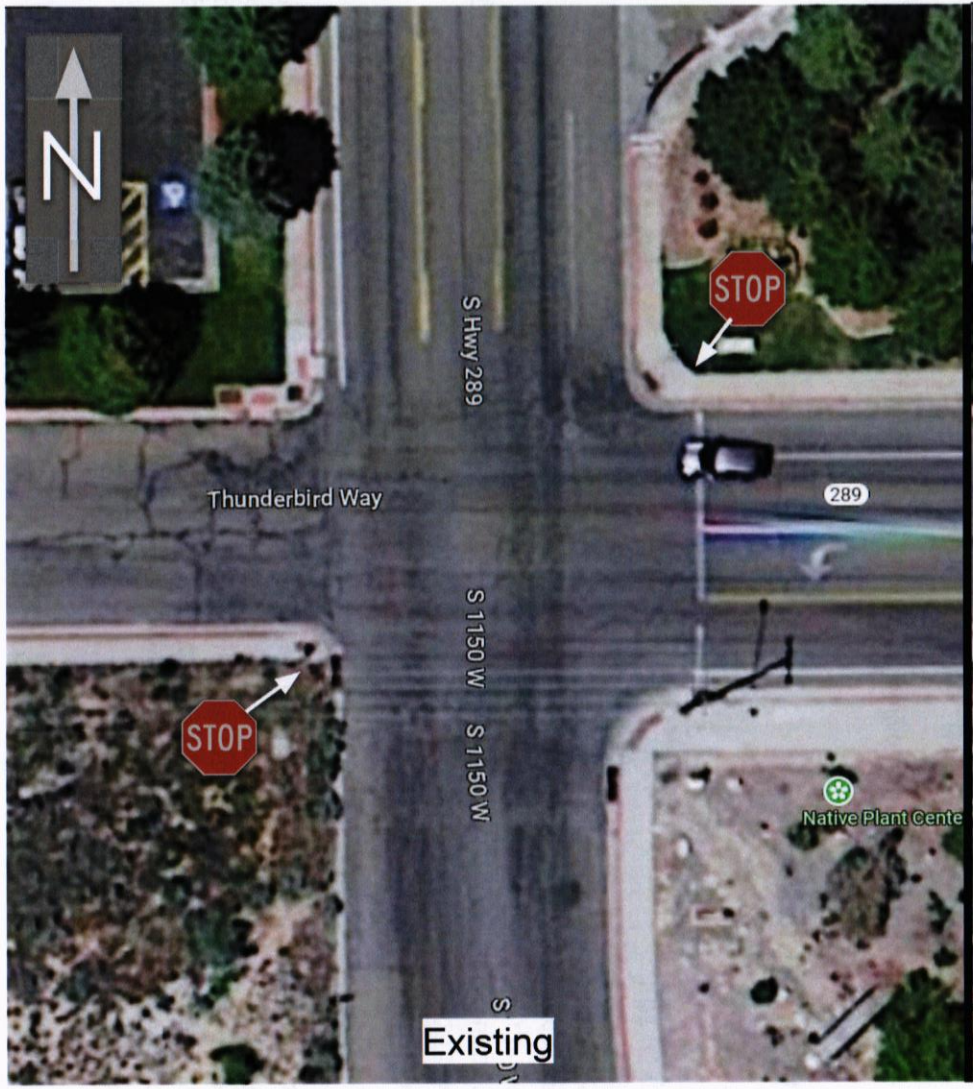
N
STOP
STOP
S Hwy 289
Thunderbird Way
289
S 1150 W
S 1150 W
Native Plant Cente
Existing

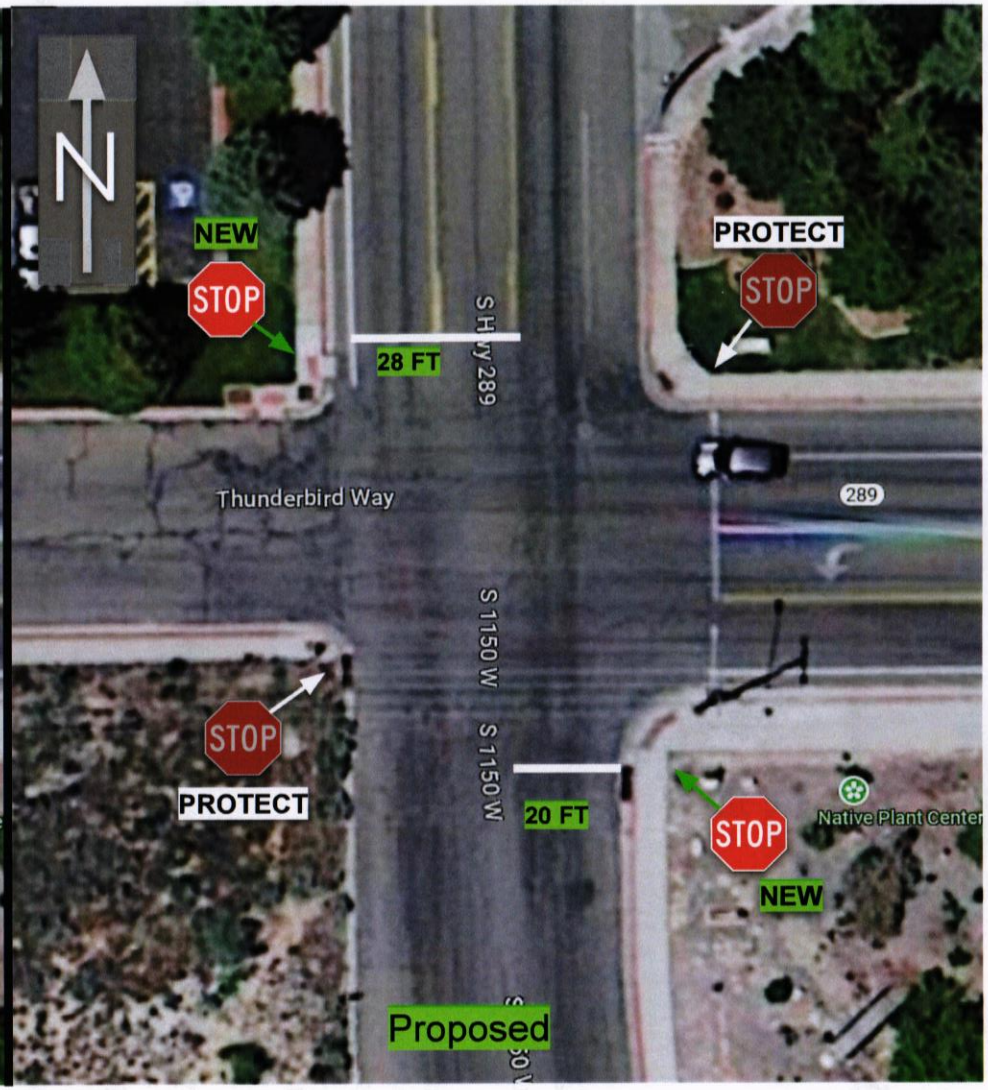
N
NEW
STOP
28 FT
S Hwy 289
PROTECT
STOP
Thunderbird Way
289
S 1150 W
S 1150 W
STOP
PROTECT
20 FT
STOP
NEW
Native Plant Center
Proposed


STOP
300 FT


NEW 36" Stop Sign
STOP
NEW Stop Bar 20FT


NEW 36" Stop Sign
STOP
FedEx
NEW Stop Bar 28 FT


300 FT

State of Utah

DEPARTMENT OF TRANSPORTATION
Division of Traffic & Safety
4501 South 2700 West
Box 143200
Salt Lake City, Utah 84119-3200
Phone: (801) 965-4195, Fax: (801) 965-4736

MEMORANDUM

April 17, 2018

TO: Robert Dowell, P.E.
UDOT Region 4 Traffic Operations Engineer

FROM: Jesse Sweeten, P.E.
Traffic and Safety Design Engineer

Jeremy Searle, PE, PTOE

Digitally signed by Jeremy Searle, PE, PTOE
DN: cn=Jeremy Searle, PE, PTOE, o=Hales Engineering, ou, email=jeremy@halesengineering.com, c=US
Date: 2018.04.17 15:03:30 -06'00'

SUBJECT: All-Way Stop and Pedestrian Crosswalk Study for SR-289 at 1150 West/200 South in Cedar City
Study # 18-TS1204-04-ST,PED 0289 (MP 1.07)

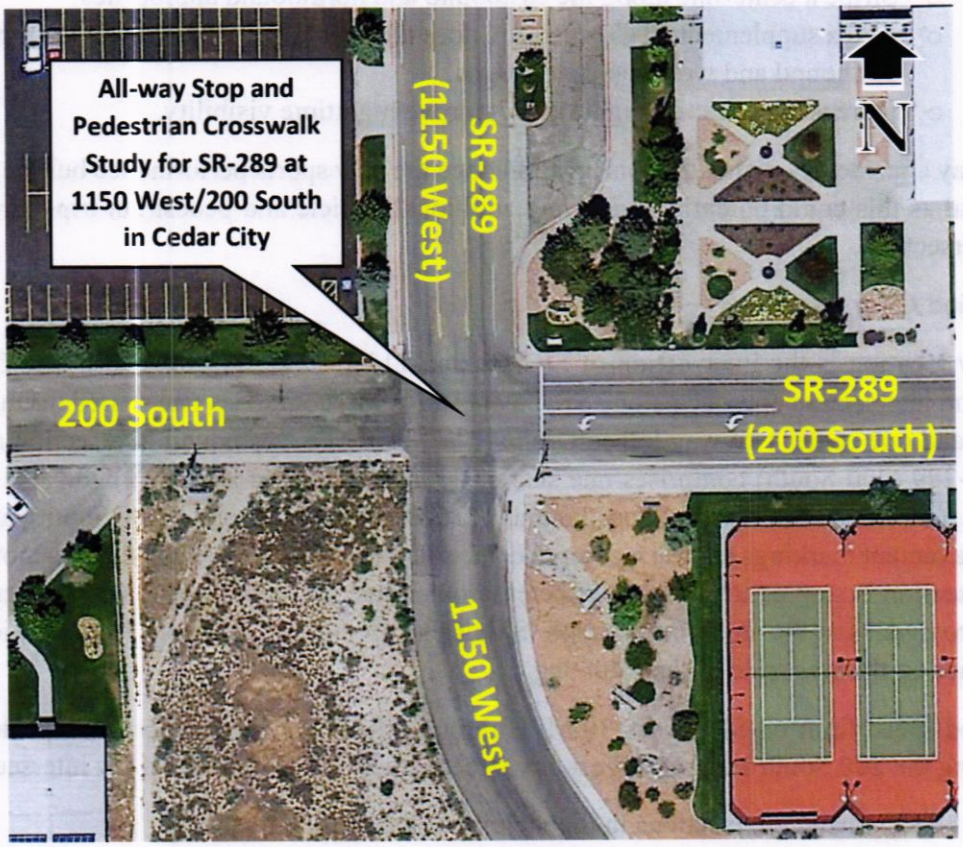

Figure 1. Study Location

Study Findings

The Division of Traffic and Safety has studied the subject location to determine if all-way stop control is warranted. Based on the criteria outlined in the Utah MUTCD Section 2B.07, **all-way stop control is not warranted at the SR-289 and 1150 West/200 South intersection if the obstructions (a small tree and bridge) on the southeast corner of the intersection are removed.**

Additionally, based on Utah Policy 06C-27, **the study location does not warrant a marked crosswalk along the uncontrolled approaches.** Based on UDOT Policy 06C-27, UDOT could consider installing marked crosswalks on the stop-controlled eastbound and westbound approaches.

Additionally, the following improvements could be made to improve intersection safety and operations:

- Provide consistent pavement markings and delineations along city streets (1150 West northbound and 200 South eastbound) with current standards along the SR-289 intersection approaches. These include:
    - Stripe a stop bar on the eastbound approach
    - Stripe shoulder delineation along the eastbound and northbound approaches
    - Stripe a centerline along the eastbound and northbound approaches
    - Add a supplemental "Cross traffic does not stop" (MUTCD W4-4P) sign below the eastbound and westbound stop signs.
    - Increase intersection lighting to improve nighttime visibility.

UDOT may consider re-evaluating this location once the new sports performance building is fully operational as this could potentially generate additional vehicle and pedestrian trips through the study intersection.

Intersection Characteristics

The study location is the intersection of SR-289 and 1150 West/200 South in Cedar City. The southbound intersection approach along SR-289 (1150 West) comprises one shared through/right-turn lane and one center two way left-turn lane (TWLTL). The westbound intersection approach along SR-289 (200 South) comprises one shared through/right-turn lane, one dedicated left-turn lane and a delineated shoulder. The northbound (1150 West) and eastbound (200 South) city streets have no pavement markings and each comprise one shared lane for all vehicle turning movements. The intersection is stop controlled along the eastbound and westbound approaches. There are no marked crosswalks at the study intersection. Sidewalks are not available on the north side of the west leg nor on the west side of the south leg.

The posted speed limit on SR-289 is 30 MPH through the study intersection. The posted speed limits along the 200 South and 1150 West city streets are 25 MPH near the study intersection.

There are no signalized intersections in the vicinity of the study intersection.

All-way Stop Analysis

An analysis was performed using the procedure outlined in the Utah MUTCD Chapter 2B, Section 7 to determine if all-way stop control is warranted at the study location. The following assumptions and observations were made regarding the intersection in question:

- Traffic turning-movement count data were collected on Tuesday, April 10, 2018 and Wednesday, April 11, 2018. Data were collected to capture the period from 7:00 AM to 7:00 PM. See the Appendix for traffic count data.
- Since the posted speed limit on SR-289 is 40 MPH or less, the full values for the warrants were used in the analysis.

Based on the Utah MUTCD Part 2B.07, a stop sign on all approaches is not warranted, as discussed in greater detail below:

- Five or more reported crashes in a 12-month period that may be corrected by the installation of an all-way stop control.
  - Crash data were obtained from the UDOT Traffic and Safety Division. A review of the crash data indicates there were 17 crashes reported at this intersection from January 1, 2010 through February 28, 2018 (the current period of available data). Additionally, there have been no reported crashes so far in 2018. Crash data are summarized in Table 1.
  - No year had greater than 5 crashes potentially correctable by all-way stop control. Therefore, this criterion is not met.

Table 1. Crash Data for SR-289 & 1150 West/200 South (All-way Stop Related)

	Total Crashes	Severe Crashes	Correctable by All Way Stop	Correctable by All Way Stop & Severe
2010	3	0	0	0
2011	2	0	2	0
2012	1	0	1	0
2013	2	1	1	0
2014	3	0	3	0
2015	0	0	0	0
2016	2	0	1	0
2017	4	0	3	0
2018	0	0	0	0
Total	**17**	**1**	**11**	**0**

- Minimum traffic volumes:
  - The vehicular volume entering the intersection from the major street approaches averages at least 300 vehicles per hour for any 8 hours of an average day. Therefore, this criterion was met.

- The combined vehicular, pedestrian, and bicycle volume entering the intersection from the minor street approaches does not average at least 200 units per hour for the same 8 hours. Therefore, the minimum volumes consideration for all-way stop applications is not met.
- Traffic volumes would need to increase by 45% for this warrant to be met.

- Additionally, the following other criteria were considered.
  - The need to control left-turn conflicts.
    - Minimal confusion regarding right-of-way was observed during the data collection period. If confusion had persisted in observed driver behavior, all-way stop control could potentially alleviate this issue by requiring all movements to stop.
  - The need to control vehicle/pedestrian conflicts near locations that generate high pedestrian volumes.
    - Minimal pedestrian conflicts were observed during data collection. One pedestrian related crash occurred at this intersection since 2010. This crash is discussed in greater detail in the pedestrian analysis section below.
  - Locations where a road user, after stopping, cannot see conflicting traffic and is not able to negotiate the intersection unless conflicting cross traffic is also required to stop.
    - Intersection sight distances were found to meet design minimums for all movements based on posted speed limits, with exception of the westbound left-turn movement. This is due to a bridge and a tree on the southeast corner of the intersection obscuring the view for the westbound left-turn movement. UDOT should remove these objects to increase sight distances for the westbound left-turn movement. If these objects cannot be removed all-way stop control should be implemented.
  - An intersection of two residential neighborhood collector (through) streets of similar design and operating characteristics where all-way stop control would improve traffic operational characteristics of the intersection.
    - Although these are not residential streets, all four legs are similar in operating characteristics. However, field visit observations note that there was minimal confusion about right-of-way. Any potential driver confusion about right-of-way could be mitigated in part by pavement delineations and eastbound stop line marking made consistent with the SR-289 southbound and westbound approaches.

As an alternative to stop control, a single-lane roundabout could be considered at this location. If this alternative is pursued additional analysis should be performed.

Pedestrian Analysis

Pedestrian volumes, vehicle volumes, and gap data were collected on Tuesday, April 10, 2018 and Wednesday, April 11, 2018 to capture the 7:00 AM to 7:00 PM time period. All observed pedestrians were adults and had no noticeable disabilities.

Table 2 shows a summary of the peak pedestrian volumes of aggregate crossings in an hour over the uncontrolled approaches of SR-289/1150 West. Table 3 shows a summary of gap data related to crossings over the uncontrolled approaches of SR-289/1150 West.

Table 4 shows a summary of vehicle volume data during the identified pedestrian peak hour.

Table 2. Pedestrian Peak Hour Crossings

Aggregated Crossing Locations	Pedestrian Peak Hour	Intersection Leg Crossed	Count of Pedestrians (all adults)	Total
SR-289/1150 West	9:30 AM – 10:30 AM	Northbound	4	
		Southbound	3	7

Table 3. Gap Data Summary, SR-289/1150 West

	SR-289/1150 West
Peak Hour	9:30 AM – 10:30 AM
Pedestrian Volume	7 pedestrians/hour
Crossing Distance	53 feet
Minimum Gap (seconds)	15
Number of Usable Gaps	95
Total Useable Gap (minutes)	31
Average Demand per Gap	0.07
Average Time Between Useable Gaps (minutes)	0.63

Table 4. Vehicle Data Summary

Peak Period Crossings	Peak Hour	SR-289/200 South						SR-289/1150 West					
		Eastbound			Westbound			Northbound			Southbound		
		Left	Thru	Right	Left	Thru	Right	Left	Thru	Right	Left	Thru	Right
SR-289/1150 West	9:30 AM - 10:30 AM	18	31	1	17	22	31	0	74	7	55	92	35

An analysis was performed to determine if any additional safety enhancements are needed within the study area. The results of the analysis are summarized below:

- The crossing distance of the north leg of SR-289 at the study location is approximately 53 feet. Assuming an adult walking speed of 4 ft/sec and a perception/reaction time of 2 seconds, the minimum usable gap time required for an adult to cross is 15 seconds.
- There was a maximum of 7 pedestrians per hour observed crossing SR-289 during the SR-289/1150 West pedestrian peak hour (9:30 AM – 10:30 AM).
- The posted speed limit along SR-289 southbound is 30 MPH and 25 MPH along 1150 West northbound in the study area.
- Gap data showed 76 useable gaps during the pedestrian peak hour period from 9:30 AM to 10:30 AM.
- The 2016 AADT along the north leg of SR-289 at the study intersection was 5,100 vehicles per day. The 2016 AADT along the east leg of SR-289 at the study intersection was 2,800 vehicles per day.
- UDOT Policy 06C-27 indicates that a minimum of 20 pedestrian crossings per peak hour be confirmed before placing a high priority on the installation of a marked crosswalk. According to the policy, school-aged children, elderly people and pedestrians with perceived disabilities count double towards volume criteria. This adjustment to pedestrian volumes was not applied in this study as none of these pedestrian types were observed. Thus, a maximum of 7 pedestrians per hour was observed crossing SR-289/1150 West at the study intersection. **The study intersection does not meet the minimum volume criteria to warrant installation of a marked crosswalk.**
- Based on UDOT Policy 06C-27, UDOT could consider installing marked crosswalks on the stop-controlled eastbound and westbound approaches.
- UDOT Policy 06C-27 also indicates that sites which directly serve a generator despite not meeting pedestrian volume criteria can meet criteria for recommendation of a marked crosswalk and enhancements.
    - The study intersection is positioned within the Southern Utah University (SUU) Campus. According to the campus' Executive Director of Facilities Management, the intersection is heavily used by pedestrians and drivers composed of adjacent community members, university students and university workers.[1] Although these descriptions ascribe the study intersection attributes of a pedestrian generator, results of data collection and observations do not confirm that the site technically operates as a pedestrian generator.
    - While the football stadium just northeast of the intersection is a major pedestrian generator, most pedestrians would likely cross midblock north of the study intersection as the parking lots and entrance to the stadium are both located north of the intersection.
    - SUU Facilities Management cites future projects which may impact traffic operations at the location in the future. UDOT may consider re-studying this location once these projects are complete and fully occupied, and/or at times during the year when these facilities are more in use.

[1] Letter from the Executive Director of Facilities Management at SUU regarding the location available in Appendix.

- UDOT Policy 06C-27 indicates that a three-lane roadway with AADT less than 9,000 vehicles per day and with a posted speed limit less than or equal to 30 MPH, presents a candidate site for marked crosswalk where a marked crosswalk alone may be sufficient.

Crash data were obtained from the UDOT Traffic and Safety Division. A review of the crash data indicates that 17 crashes were reported in the study area from January 1, 2010 through February 28, 2018 (the current period of available data). Of these 17 crashes, one was pedestrian-related and severe. The crash data for the intersection are summarized in Table 5. The one pedestrian related crash involved a northbound vehicle colliding with a pedestrian crossing the northern leg of the intersection. This crash occurred approximately 1 hour after sunset. UDOT could consider installing additional lighting at this intersection to help improve visibility.

Table 5. Crash Data Summary for SR-289 & 1150 West/200 South

	Total Crashes	Severe Crashes	Pedestrian	Pedestrian & Severe
2010	3	0	0	0
2011	2	0	0	0
2012	1	0	0	0
2013	2	1	1	1
2014	3	0	0	0
2015	0	0	0	0
2016	2	0	0	0
2017	4	0	0	0
2018	0	0	0	0
Total	**17**	**1**	**1**	**1**

Additional Safety Discussion

Approximately 64 percent of crashes represented at the study location for the January 1, 2010 to February 28, 2018 period of available data comprise angle crashes which occurred between vehicles moving perpendicularly of one another. Research on countermeasures from the FHWA Crash Modification Clearinghouse identified the following countermeasures in Table 6 as potentially relevant to the study request (not inclusive of all potentially relevant countermeasures).

Table 6. Identified Countermeasures

Countermeasure Category	Countermeasure or countermeasure description
Traffic Control Visibility	Convert two-way to all-way stop control (with or without flashing beacons)[2]
Roadside	Increase triangle sight distance
Delineation	On-pavement markings

The above safety-related implementations were identified based on the results of data collection observations, all-way stop analysis, crash analysis and safety concerns expressed by SUU Campus Facilities Management. Further research and analysis are recommended to identify countermeasure feasibility and appropriateness of implementation following the recommendations in this study.

Conclusions

The Division of Traffic and Safety has studied the subject location to determine if all-way stop control is warranted. Based on the criteria outlined in the Utah MUTCD Section 2B.07, **all-way stop control is not warranted at the SR-289 and 1150 West/200 South intersection if the obstructions (a small tree and bridge) on the southeast corner of the intersection are removed.**

Additionally, based on Utah Policy 06C-27, **the study location does not warrant a marked crosswalk along the uncontrolled approaches.** Based on UDOT Policy 06C-27, UDOT could consider installing marked crosswalks on the stop-controlled eastbound and westbound approaches.

Additionally, the following improvements could be made to improve intersection safety and operations:

- Provide consistent pavement markings and delineations along city streets (1150 West northbound and 200 South eastbound) with current standards along the SR-289 intersection approaches. These include:
    - Stripe a stop bar on the eastbound approach
    - Stripe shoulder delineation along the eastbound and northbound approaches
    - Stripe a centerline along the eastbound and northbound approaches
    - Add a supplemental "Cross traffic does not stop" (MUTCD W4-4P) sign below the eastbound and westbound stop signs.
    - Increase intersection lighting to improve nighttime visibility.

UDOT may consider re-evaluating this location once the new sports performance building is fully operational as this could potentially generate additional vehicle and pedestrian trips through the study intersection.

[2] All-way stop control is not warranted at this location, and sight distance does not appear to be limited.

If you have any questions or do not agree with the conclusions, please contact the Traffic Studies office at (801) 766-4343.

JS/rsg

cc: Robert Miles, Carrie O'Neill, Leslie Calderwood, Anne Ogden

*Supporting electronic data available on request

Figure 2. Northbound Approach

Figure 3. Southbound Approach

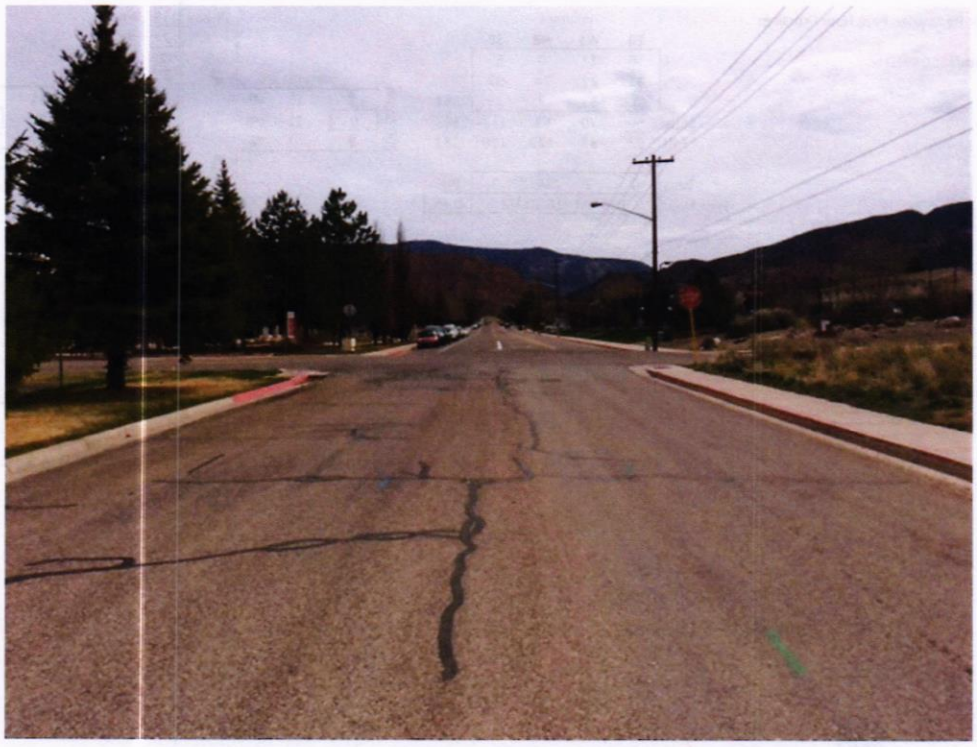

Figure 4. Eastbound Approach

Figure 5. Westbound Approach

SR-289/1150 West Pedestrian Peak Hour Crossings

SR-289 & 200 South/1150 West
Cedar City, UT
4/11/2018
2nd Wednesday

Volumes

	EB	WB	NB	SB	
L	18	17	0	55	
T	31	22	74	92	
R	1	31	7	35	383
Enter	50	70	81	182	383
Exit	93	57	123	110	383
Peds	0	2	4	3	PHF
Peak Hour	9:30 AM - 10:30 AM				0.75

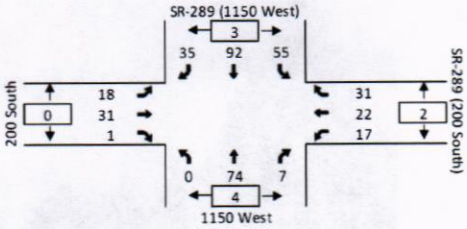

Figure 6. SR-289/1150 West Pedestrian Peak Hour Summary

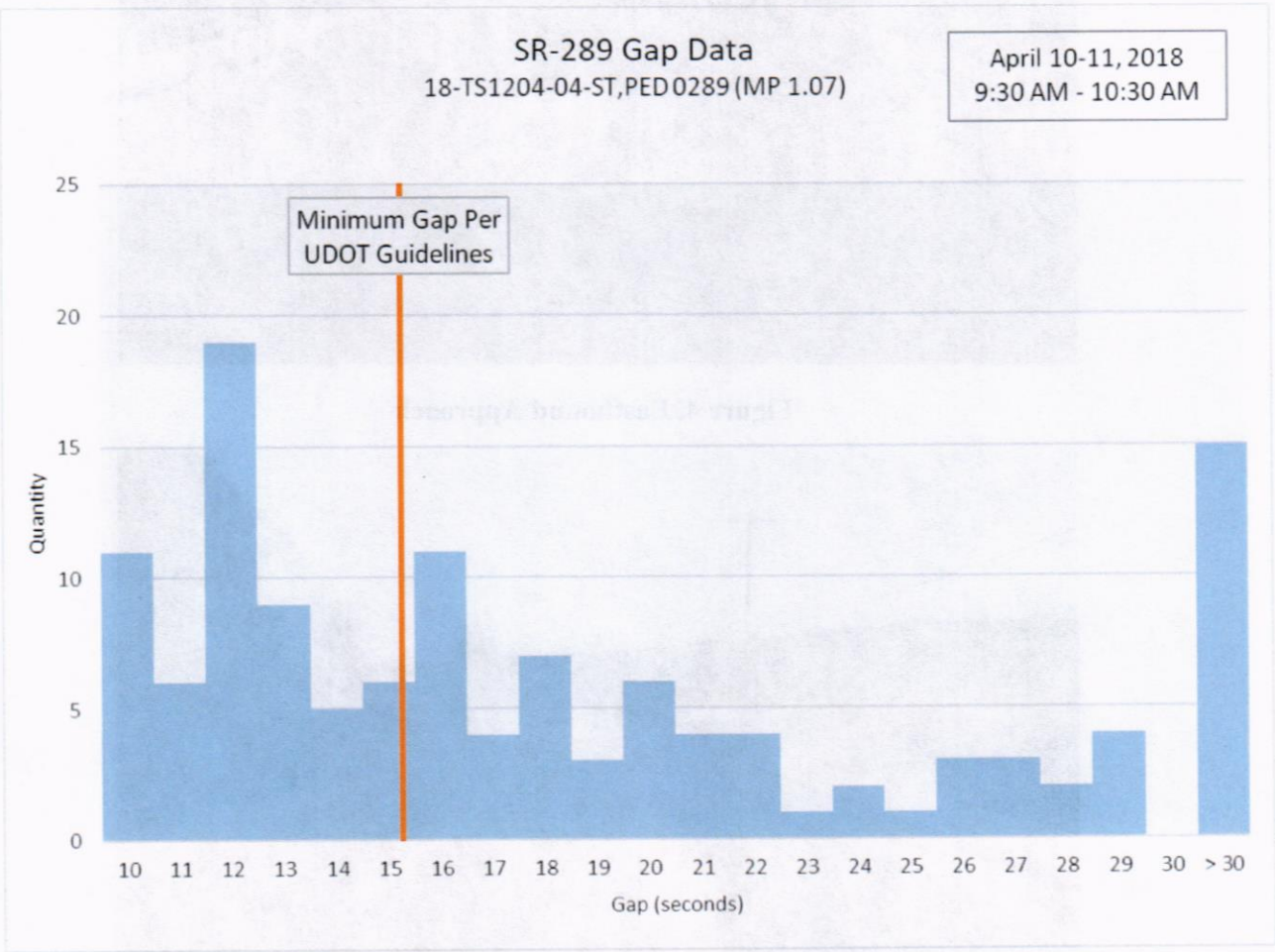

Figure 7. Gap Data Histogram, SR-289/1150 West

Table 7. Vehicle and Pedestrian Count Data at SR-289 & 1150 West/200 South

SR-289 & 200 South/1150 West
Cedar City, UT
4/11/2018
2nd Wednesday

Source: RSG

	200 South Eastbound Approach			SR-289 (200 South) Westbound Approach			1150 West Northbound Approach			SR-289 (1150 West) Southbound Approach			Pedestrians (Crossing Approach)					
	Left	Through	Right	Left	Through	Right	Left	Through	Right	Left	Through	Right	EB	WB	NB	SB	15 Min	Hour
7:00 AM	1	2	1	1	2	3	1	18	0	5	8	9	0	2	0	0	51	51
7:15 AM	4	8	1	1	5	2	1	10	1	6	8	1	0	1	0	0	48	99
7:30 AM	2	5	0	0	4	3	1	14	0	12	6	9	1	0	0	0	56	155
7:45 AM	6	20	1	2	4	11	0	16	1	46	15	3	0	1	0	0	125	280
8:00 AM	5	2	0	0	4	9	1	23	1	17	17	3	0	0	0	0	82	311
8:15 AM	6	4	1	1	7	2	0	17	1	9	17	7	0	0	0	0	72	335
8:30 AM	7	10	0	2	4	5	1	24	1	26	20	10	1	0	0	1	110	389
8:45 AM	3	14	0	5	2	8	0	24	3	74	28	7	0	1	0	0	168	432
9:00 AM	3	13	0	2	6	8	0	16	1	12	28	3	0	0	1	0	92	442
9:15 AM	6	4	0	1	3	2	0	22	4	7	36	8	1	1	0	1	93	463
9:30 AM	4	8	0	2	4	5	0	25	3	11	25	9	0	1	1	0	96	449
9:45 AM	3	7	0	3	9	11	0	20	3	28	37	7	0	0	1	1	128	409
10:00 AM	5	7	0	6	4	10	0	13	0	8	17	12	0	0	0	0	82	399
10:15 AM	6	9	1	6	5	5	0	16	1	8	13	7	0	1	2	2	77	383
10:30 AM	3	8	0	2	2	4	0	18	1	7	12	4	1	0	0	1	61	348
10:45 AM	7	9	0	7	7	7	0	20	1	17	17	6	0	0	0	0	98	318
11:00 AM	5	5	0	4	6	14	0	13	1	8	21	12	0	1	0	0	89	325
11:15 AM	6	4	0	5	3	10	0	17	2	14	17	9	0	0	1	0	87	335
11:30 AM	9	8	1	8	5	16	1	28	3	21	50	6	0	0	0	1	156	430
11:45 AM	8	5	1	10	8	15	1	37	2	19	40	11	0	0	0	0	157	489
12:00 PM	4	5	0	7	3	9	1	28	2	13	33	10	0	2	0	0	115	515
12:15 PM	6	5	0	3	4	14	1	27	2	13	42	6	0	2	0	0	123	551
12:30 PM	3	9	0	4	2	16	0	25	3	25	24	15	0	0	1	0	126	521
12:45 PM	7	16	0	8	5	11	0	33	2	32	25	9	0	1	0	0	148	512
1:00 PM	6	7	1	10	5	11	1	28	2	11	25	4	0	5	0	1	111	508
1:15 PM	7	7	0	5	5	7	0	32	0	12	25	3	0	0	0	0	103	488
1:30 PM	3	2	0	4	5	9	0	23	1	17	24	1	0	0	0	0	89	451
1:45 PM	3	12	1	9	7	8	0	35	3	13	32	7	0	0	0	0	130	433
2:00 PM	4	6	1	7	10	20	0	27	0	7	28	3	0	0	0	0	113	435
2:15 PM	5	4	2	10	11	15	0	31	3	16	26	8	0	1	2	1	131	463
2:30 PM	5	9	0	8	4	6	2	28	2	12	30	2	0	0	0	0	108	482
2:45 PM	5	8	1	3	8	8	1	44	2	30	29	5	2	0	1	0	144	496
3:00 PM	5	6	0	8	6	10	0	34	2	11	25	6	1	0	0	0	113	496
3:15 PM	2	7	0	3	5	11	0	28	2	11	30	6	0	0	0	1	105	470
3:30 PM	8	7	0	6	4	9	0	26	2	13	23	5	1	0	1	0	103	465
3:45 PM	4	7	0	9	7	15	1	30	4	28	44	8	1	0	0	1	157	478
4:00 PM	2	9	0	9	3	25	0	32	1	15	37	9	0	1	0	0	142	507
4:15 PM	4	1	0	6	4	11	0	28	5	13	28	4	1	2	0	0	104	506
4:30 PM	1	3	0	2	4	17	0	13	0	12	18	4	0	0	0	0	74	477
4:45 PM	5	3	1	11	1	15	0	28	3	15	32	3	0	0	0	2	117	437
5:00 PM	5	7	0	5	1	13	0	32	2	13	33	3	0	0	0	1	114	409
5:15 PM	5	6	0	6	0	14	0	30	2	20	47	5	0	0	0	0	135	440
5:30 PM	2	2	0	8	2	14	0	30	3	14	35	2	0	2	0	0	112	478
5:45 PM	2	2	0	10	3	22	0	28	0	20	30	4	0	0	0	0	121	482
6:00 PM	2	4	0	10	4	19	0	28	2	8	36	4	0	1	0	0	117	485
6:15 PM	4	4	1	9	5	7	1	34	3	12	27	1	1	2	0	0	108	458
6:30 PM	5	2	0	10	2	4	1	28	3	13	30	8	0	0	0	0	106	452
6:45 PM	4	2	0	8	3	16	0	48	2	14	27	2	0	3	0	0	126	457

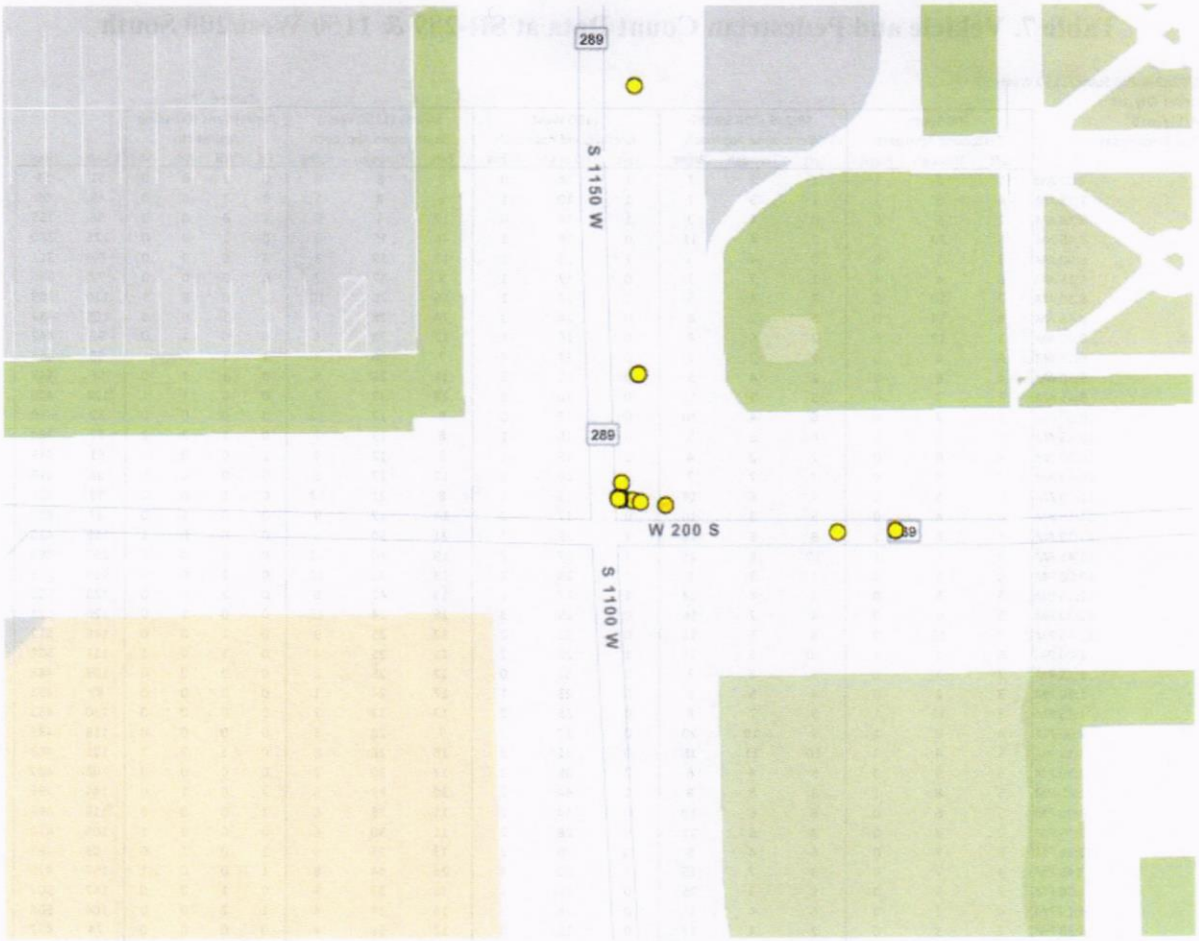

Figure 8. Crash Locations and Severities

Study Overview

UDOT Region: 4

Date of Request: Apr 3, 2018

Requesters's Name: Anne Ogden

Requesters's Email: anneogden@utah.gov

Requested Due Date: Apr 27, 2018

Actual Due Date: Apr 17, 2018

Awarded To: udottrafficstudies@rsginc.com

cc Completed Study To:

Last Study # (if known):

Last Study Date (if known):

Study Type

Study Type: All Way Stop Warrant Study,Pedestrian Study (crosswalk and gap),Pedestrian Crosswalk

Location

State Route Number (4 digit): 0289

Beginning Milepoint: 1.07

Ending Milepoint: NaN

Cross Street Name/Number: 1150 W / 200 S

City: Cedar City

Study Details:

Please perform 4-way stop and crosswalk studies at the intersection of 1150 W and 200 S in Cedar City. The north and east legs of the intersection are SR-289; the south and west legs are City streets. Attached is a letter from SUU requesting this change. The last day of spring semester at SUU is April 26th, so please perform the counts before then. Contact me at 435-201-0151 if you have questions.

SUU SOUTHERN UTAH UNIVERSITY

Facilities Management

March 14, 2018

Robert Dowell
UDOT District Permit Coordinator
4501 South 2700 West
Salt Lake City, UT 84114

Dear Mr. Dowell:

Southern Utah University is committed to providing a safe experience to those that join us on campus, which includes being aware of the impact roadways adjacent to the university have on campus safety. For several years, we have observed increasing traffic and pedestrian activity at the intersection of 1150 West and 200 South in Cedar City.

This intersection is heavily used by the community as well as SUU students, student athletes, faculty, and staff - both as pedestrians and drivers. There have been many near-misses and several collisions at the intersection over the last few years, and we expect pedestrian traffic to increase further as we finish a new building just west of the intersection. As a means of minimizing the probability of future accidents, we are requesting your help to implement some safety-oriented solutions in this area.

SUU is respectfully requesting UDOT to partner with us in implementing solutions which will improve safety in the area of 1150 West 200 South. Our initial suggestion is to install two additional stop signs and four crosswalks at the intersection to improve the safety for both motorists and pedestrians (indicated on the attached aerial map), but we seek your expertise for solutions.

Your team has been a great partner with SUU in the past and we look forward to working with you on this project as well. Feel free to contact me with any questions or ideas you may have. My cell number is 435-590-8451; e-mail address is funk@suu.edu.

With regard,

TIGER FUNK.

Tiger Funk
Executive Director
SUU Facilities Management

cc: Anne Ogden, UDOT Traffic Engineer
Marvin Dodge, CEO, VP of Finance and Administration
Debbie Corum, Athletic Director
Josh Neilson, Chief of SUU Police
Ben Johnson, Director of Construction Services, Space Planning, and Maintenance

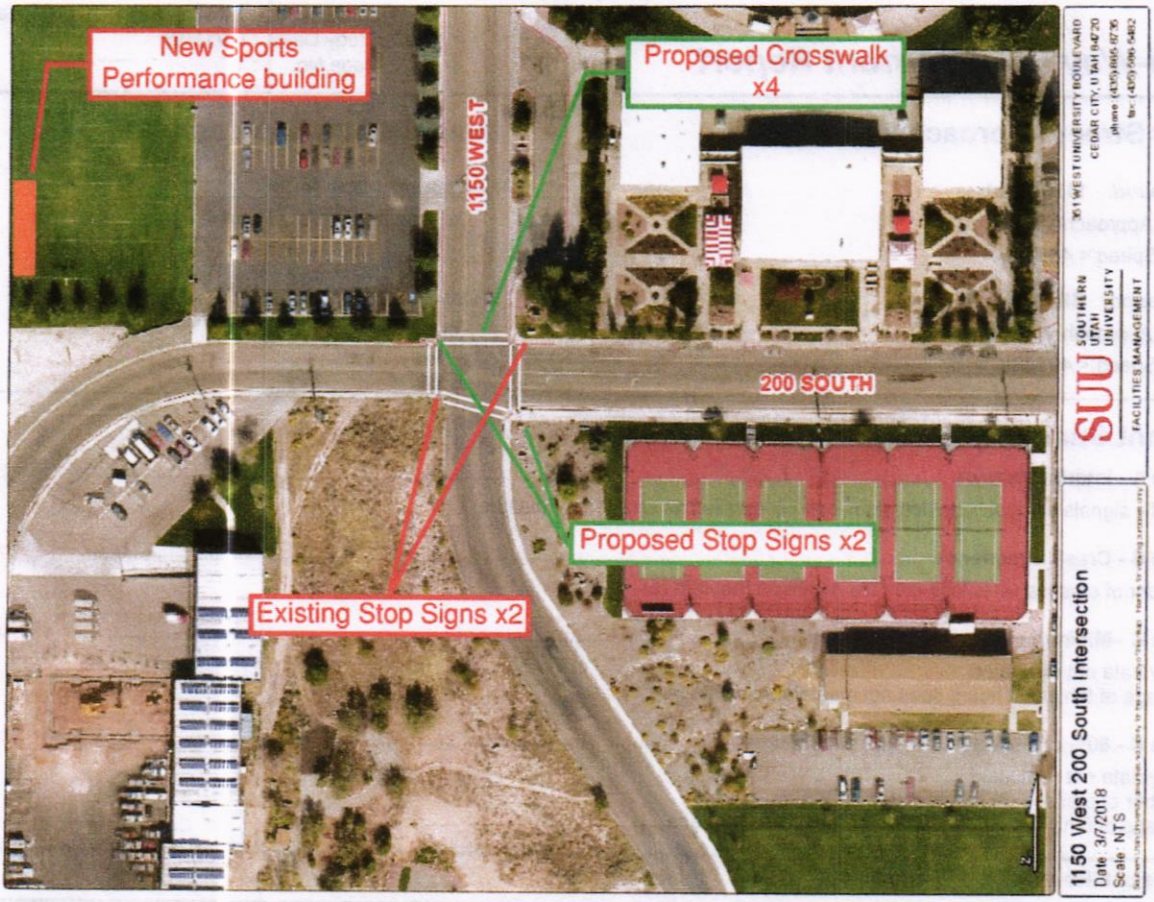
New Sports Performance building
Proposed Crosswalk x4
1150 WEST
200 SOUTH
Proposed Stop Signs x2
Existing Stop Signs x2
351 WEST UNIVERSITY BOULEVARD
CEDAR CITY, UTAH 84720
SUU SOUTHERN UTAH UNIVERSITY
FACILITIES MANAGEMENT
1150 West 200 South Intersection
Date: 3/7/2018
Scale: NTS

Utah Department of Transportation

Division of Traffic and Safety

(801) 766-4343

Study Name : **All Way Stop_TS1204_Task262**
Study Date : **04/11/18**
Page No. : **1**

Multi-Way Stop Warrant Report

Major Street Approaches

Northbound: **1150 West**
Total Approach Volume: **1,333**
85% Speed < 40 MPH.

Southbound: **SR-289 (1150 West)**
Total Approach Volume: **2,355**
85% Speed < 40 MPH.

Minor Street Approaches

Eastbound: **200 South**
Total Approach Volume: **546**

Westbound: **SR-289 (200 South)**
Total Approach Volume: **989**

Warrant Summary

Criteria A - Interim Measure ..... Not Evaluated

If traffic signals are justified, stop signs can be installed as an interim measure.

Criteria B - Crash Experience ..... Not Satisfied

Number of crashes (4) is less than the minimum required (5).

Criteria C - Minimum Volumes and Delays ..... Not Satisfied

Delay data not evaluated
Average of 8 highest hours does not meet volume criteria.

Criteria D - 80% of Volumes, Delays, and Crashes ..... Not Satisfied

Delay data not evaluated
Number of crashes (4) meets the minimum required (4).
Average of 8 highest hours does not meet volume criteria.

Analysis of 8-Hour Volume Warrants:

Time	Major Total	Major Avg	Minor Total	Minor Avg	Crit C Major	Crit C Minor	Crit C Meets?	Crit D Major	Crit D Minor	Crit D Meets?
14:00 - 15:00	336	332.9	160	140.1	300-Yes	200-No	Major	240-Yes	160-No	Major
11:00 - 12:00	333		156							
12:00 - 13:00	371		141							
15:00 - 16:00	339		139							
16:00 - 17:00	300		137							
13:00 - 14:00	299		134							
17:00 - 18:00	353		129							
18:00 - 19:00	332		125							
10:00 - 11:00	198		120							
09:00 - 10:00	305		104							
08:00 - 09:00	331		101							
07:00 - 08:00	191		89							
23:00 - 00:00	0		0							
22:00 - 23:00	0		0							
21:00 - 22:00	0		0							
20:00 - 21:00	0		0							
19:00 - 20:00	0		0							
06:00 - 07:00	0		0							
05:00 - 06:00	0		0							
04:00 - 05:00	0		0							
03:00 - 04:00	0		0							
02:00 - 03:00	0		0							
01:00 - 02:00	0		0							
00:00 - 01:00	0		0							

Intersection: SR-289 & 1150 West/200 South
Date: 4/10/2018 & 4/11/2018
Weather: Good

Useable Gap (Sec): 15.3

	Pedestrian Peak Hour, SR-289/1150 West			
Rank	9:30:00	9:45:00	10:00:00	10:15:00
1	39	32	52	56
2	33	31	50	41
3	29	28	46	39
4	27	22	31	38
5	23	21	29	37
6	23	20	29	36
7	23	20	29	34
8	22	19	29	27
9	21	19	28	26
10	21	19	28	24
11	19	17	27	21
12	19	16	26	21
13	19	16	24	21
14	18	16	21	18
15	17	16	21	18
16	17	16	20	18
Total Discrete Gaps >= Min Gap (#)	20	16	20	20
Total Usable Gap Time (Sec)	436	327	555	542
Total Usable Gaps (#)	76			
Total Usable Gaps (Sec)	1861			

	Pedestrian Peak Hour, SR-289/1150 West			
	9:30-9:45	9:45-10:00	10:00-10:15	10:15-10:30
	2	2	3	3
	2	2	3	2
	1	1	3	2
	1	1	2	2
	1	1	1	2
	1	1	1	2
	1	1	1	2
	1	1	1	1
	1	1	1	1
	1	1	1	1
	1	1	1	1
	1	1	1	1
	1	1	1	1
	1	1	1	1
	1	1	1	1
	1	1	1	1
Number of Usable Gaps	22	18	27	28
Number of Usable Gaps	95			

Time between gaps (min)	0.63			
Time between gaps (min & sec)	0	minute	38	seconds
Demand (peds)	7			
Demand/Gap	0.07			

Marked Pedestrian Crosswalks

UDOT 06C-27

Effective: March 6, 2008 Revised: August 1, 2017

Purpose

To define the criteria the Utah Department of Transportation (Department) will use when considering the installation of marked pedestrian crosswalks on state highways.

Policy

The currently adopted version of the Manual on Uniform Traffic Control Devices (MUTCD) provides general guidelines regarding the application of crosswalk markings. More specific criteria are necessary to properly define when and where marked pedestrian crosswalks may be installed for consistent application. The basis for the criteria comes from an article in the January 2004 issue of the ITE Journal, "Safety Analysis of Marked Versus Unmarked Crosswalks in 30 Cities" and FHWA publication number HRT-04-100 "Safety Effects of Marked Versus Unmarked Crosswalks at Uncontrolled Locations, Final Report and Recommended Guidelines", September 2005. Additional pedestrian crosswalk criteria currently in use in other states and municipalities were also reviewed and used to develop the pedestrian crosswalk criteria. A summary of these criteria is shown in Figure 1 and Tables 1, 2, and 3. In addition:

- Midblock crosswalks should not be considered where the distance to the nearest intersection is less than 600 feet.
- A two-way left turn lane is not considered a median pedestrian refuge.
- Marked crosswalks alone should not be used at unsignalized intersections where the speed limit exceeds 40 MPH.
- Crosswalks should not be installed at locations that could present an increased safety risk to pedestrians such as where there is poor sight distance, complex or confusing designs, a substantial volume of heavy trucks, or other dangers without first providing adequate design features and traffic control devices.

It is important to consider other pedestrian facility enhancements such as a raised median, traffic signal, roadway narrowing, enhanced overhead lighting, traffic-calming measures, and curb extensions as needed to improve the safety of the crossing whether or not marked crosswalks are installed. All pedestrian enhancements must comply with Department Standard Drawings and Specifications.

Procedures

Marked Pedestrian Crosswalks **UDOT 06C-27.1**

Responsibility: Region Director or Region Traffic Operations Engineer

Actions

1. Receive a written request from a local jurisdiction to install a marked pedestrian crosswalk. The request will include substantial justification to install the crosswalk at the specified location.

Responsibility: Region Traffic Operations Engineer

2. Verify the request and conduct, at a minimum, a field review to determine if the location is a candidate site. Refer to the table to determine if installation of a crosswalk may result in a possible increase in pedestrian crash risk.

3. Submit request for pedestrian traffic count to the Traffic and Safety Studies Engineer if the location is a candidate site.

Responsibility: Traffic and Safety Studies Engineer

4. Perform pedestrian traffic count and determine whether a crosswalk is warranted.

5. Submit results and recommendations to the Region Traffic Operations Engineer.

Responsibility: Region Traffic Operations Engineer

6. Determine if a crosswalk will or will not be installed.

7. Perform a field review to assist with the determination.

8. Complete the following if a crosswalk will be installed:

    a. Determine what, if any, additional treatments or enhancements should accompany the crosswalk installation.

b. Respond to the local jurisdiction accordingly, arrange for design and installation of crosswalks, and consider additional treatments or enhancements.

1) Refer to the following.

a) Figure 1

b) Tables 1, 2, and 3

c) DD and SL series Standard Drawings

c. File the request and supporting information when project is completed.

7. Complete the following if a crosswalk will not be installed:

a. Respond to the local jurisdiction accordingly and file the request and supporting information.

Figure 1. Pedestrian Crossing Flowchart

August 1, 2017

SR-289/1150 West Uncontrolled Approaches

SR-289/200 South Controlled Approaches

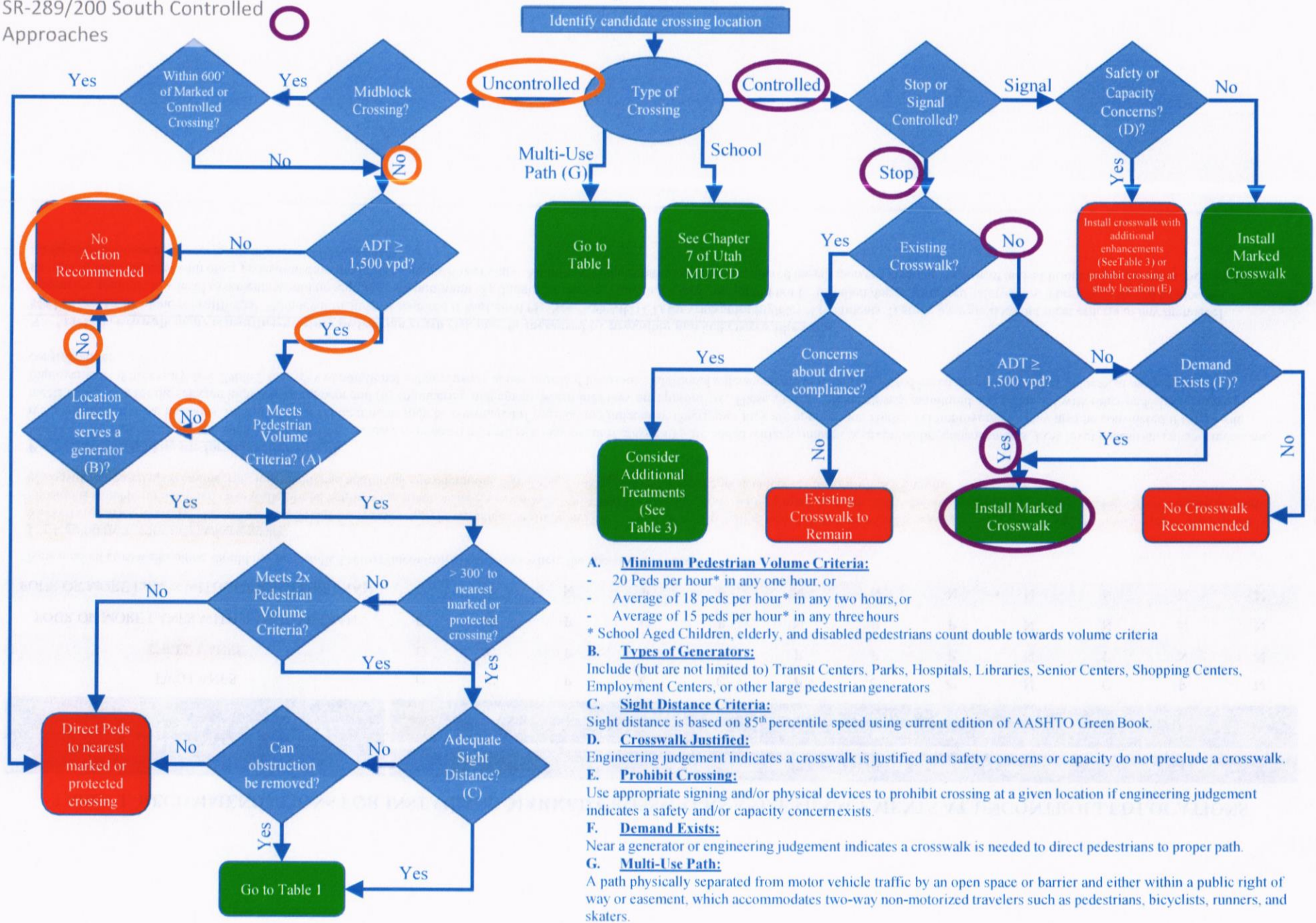

A. Minimum Pedestrian Volume Criteria:

- 20 Peds per hour* in any one hour, or
- Average of 18 peds per hour* in any two hours, or
- Average of 15 peds per hour* in any three hours

* School Aged Children, elderly, and disabled pedestrians count double towards volume criteria

B. Types of Generators:

Include (but are not limited to) Transit Centers, Parks, Hospitals, Libraries, Senior Centers, Shopping Centers, Employment Centers, or other large pedestrian generators

C. Sight Distance Criteria:

Sight distance is based on 85th percentile speed using current edition of AASHTO Green Book.

D. Crosswalk Justified:

Engineering judgement indicates a crosswalk is justified and safety concerns or capacity do not preclude a crosswalk.

E. Prohibit Crossing:

Use appropriate signing and/or physical devices to prohibit crossing at a given location if engineering judgement indicates a safety and/or capacity concern exists.

F. Demand Exists:

Near a generator or engineering judgement indicates a crosswalk is needed to direct pedestrians to proper path.

G. Multi-Use Path:

A path physically separated from motor vehicle traffic by an open space or barrier and either within a public right of way or easement, which accommodates two-way non-motorized travelers such as pedestrians, bicyclists, runners, and skaters.

TABLE 1. RECOMMENDATIONS FOR INSTALLING MARKED CROSSWALKS AND ENHANCEMENTS AT UNCONTROLLED LOCATIONS

ROADWAY TYPE (NUMBER OF LANES AND MEDIAN TYPE)	ADT < 9,000			ADT 9,000 TO 12,000			ADT 12,000 TO 15,000			ADT > 15,000		
	≤ 30 MPH	35 MPH	≥ 40 MPH	≤ 30 MPH	35 MPH	≥ 40 MPH	≤ 30 MPH	35 MPH	≥ 40 MPH	≤ 30 MPH	35 MPH	≥ 40 MPH
TWO LANES	C	C	P	C	C	P	C	C	N	C	P	N
THREE LANES	C	C	P	C	P	P	P	P	N	P	N	N
FOUR OR MORE LANES WITH RAISED MEDIAN	C	C	P	C	P	N	P	P	N	N	N	N
FOUR OR MORE LANES WITHOUT RAISED MEDIAN	C	P	N	P	P	N	N	N	N	N	N	N

*New marked crosswalks alone should not be installed across uncontrolled roadways where the speed limit exceeds 40 mph.

C = Candidate site for marked crosswalk
Marked crosswalk alone may be sufficient. Marked crosswalks must be installed carefully and selectively. Before installing new marked crosswalks, an engineering study is needed to determine whether the location is suitable for a marked crosswalk. For an engineering study, a site review may be sufficient at some locations, while a more in depth study may be needed at other sites. Additional enhancements may be considered based upon engineering judgement and additional considerations. See Table 2 for types of additional enhancements at uncontrolled locations.

P = Probable candidate site for marked crosswalk
Marked crosswalk alone may be insufficient. Possible increase in pedestrian crash risk may occur if crosswalks are added without other pedestrian facility enhancements. Low level pedestrian enhancements are recommended at these locations. Multiple low level treatments may be considered if engineering judgement determines they are appropriate. High level improvements may also be considered if (a) the site meets the criteria for the selected high level treatment and (b) engineering judgement determines they are appropriate. These sites should be closely monitored and enhanced with other pedestrian crossing improvements if necessary. See Table 2 for types of additional enhancements at uncontrolled locations. Additional enhancements may be considered based upon engineering judgement and additional considerations.

N = Marked crosswalk alone is insufficient, since pedestrian crash risk may be increased by providing marked crosswalks alone
Marked crosswalk alone is insufficient. High level treatments required if warranted (3). See Utah MUTCD for criteria for high level treatments. If study location does not meet criteria of any high level treatments, multiple low level treatments would be required as a minimum (2). Judgment may indicate that a crossing should not be installed due to increased safety risks. These sites should be closely monitored and enhanced with other pedestrian crossing improvements if necessary. Additional enhancements may be considered based upon engineering judgement and additional considerations. See Table 2 for types of additional enhancements at uncontrolled locations.

TABLE 2. TYPES OF PEDESTRIAN ENHANCEMENTS AT UNCONTROLLED LOCATIONS

LOW LEVEL PEDESTRIAN ENHANCEMENTS	HIGH LEVEL PEDESTRIAN ENHANCEMENTS (Additional criteria for each treatment must be met)
Advanced Pedestrian warning signing	Pedestrian Hybrid Beacon (HAWK)
High Visibility Crosswalk	Pedestrian Activated Signal
Median Refuge Island	Overhead School Pedestrian Assembly
Bulb-Outs	
Pedestrian Activated Flashing Beacons (Overhead or Shoulder Mounted)	
Pedestrian Activated Rectangular Rapid flashing Beacons (RRFBs)	
Reduced Corner Radii	
Split Pedestrian Crossover (SPXO)	
Installation of Yield or Stop Lines with "Yield Here To (Stop Here For) Pedestrians" Signs	
Special Pavement Markings such as "Pedestrian Look Left" or "Watch for Turning Vehicles"	
Install Overhead Lighting	
Install Directional Pedestrian Ramp	

NOTE: The list of enhancements in the table above is not intended to be all-inclusive, other types of enhancements may also be considered. The decision to use a particular enhancement at a given location should be made on the basis of either an engineering study or the application of engineering judgment. Thus, while these guidelines should be considered in the design and application of traffic control devices, they should not be considered a substitute for engineering judgment. Engineering judgment should be exercised in the selection and application of traffic control devices. Additional considerations to gaps (ability of pedestrians to cross roadway; including forced gaps), crossing width, pedestrian demand, crash history, and other factors outlined in the Pedestrian Crossing Guidelines flowchart should be considered in the selection of the appropriate enhancement.

TABLE 3. TYPES OF PEDESTRIAN ENHANCEMENTS AT CONTROLLED LOCATIONS

LOW LEVEL PEDESTRIAN ENHANCEMENTS	HIGH LEVEL PEDESTRIAN ENHANCEMENTS (Additional criteria for each treatment must be met)
Advanced Pedestrian Warning Signing	Overhead School Pedestrian Assembly
High Visibility Crosswalk	
Median Refuge Islands	
Reduced Corner Radii	
Special Pavement Markings such as "Pedestrian Look Left" or "Watch for Turning Vehicles"	
Install Overhead Lighting	
Install Directional Pedestrian Ramp	
Pedestrian "Scramble" Phase at Signalized Intersections	
Prohibiting Right-Turn on Red at Signalized intersections	
Equipping Signals with Early Release or Pedestrian Lead Time	
Installing Countdown Signal Heads	
Increased Pedestrian Crossing Time (Automated in Controller or Manually via Switch Key) during Peak Periods	

NOTE: The list of enhancements in the table above is not intended to be all-inclusive, other types of enhancements may also be considered. The decision to use a particular enhancement at a given location should be made on the basis of either an engineering study or the application of engineering judgment. Thus, while these guidelines should be considered in the design and application of traffic control devices, they should not be considered a substitute for engineering judgment. Engineering judgment should be exercised in the selection and application of traffic control devices. Additional considerations to gaps (ability of pedestrians to cross roadway; including forced gaps), crossing width, pedestrian demand, crash history, and other factors outlined in the Pedestrian Crossing Guidelines flowchart should be considered in the selection of the appropriate enhancement.

CEDAR CITY
CITY COUNCIL AGENDA ITEM 5
STAFF INFORMATION SHEET

To: Mayor and City Council

From: City Engineer

Council Meeting Date: October 4, 2023

Subject: **Consider a variance to the City Engineering Standards for a driveway location at 672 E. Canyon Ranch Drive.**

Discussion: The developer of the property located at 672 E. Canyon Ranch Drive is requesting a variance from Detail R6 of the City's Engineering Standards for a driveway location. Section 3.2.8 states as follows:

> "No driveways or other access points will be allowed within 150 feet of the intersection of two arterial streets or the intersection of an arterial street with a major collector measured from the right-of-way line to the leading edge of the driveway."

As part of the proposed Terrible's Gas Station development located at 672 E. Canyon Ranch Drive, the owner has requested a driveway access on Canyon Ranch Drive that is located less than 150 feet from the intersection of Main Street. Canyon Ranch Drive is a master-planned 75-foot wide minor arterial street and Main Street is classified as a major arterial.

The proposed driveway location is located approximately 100 feet from the right-of-way line of Main Street to the leading edge of the driveway. Concerns related to sight distance, queuing coming off Main Street have been expressed by UDOT and City staff. Similar issues have been identified at the Maverik on Airport Road, Love's on the other side of Main Street, and the new Maverik on Old Highway 91 at the South Interchange. Traffic movements involving left turns coming out of these developments can pose risks for accidents.

In order to mitigate potential for conflict points and potential accidents, as well as backups onto Main Street, the owner's engineer proposed 2 options:

1. Center Median in the middle of Canyon Ranch Drive.
2. Right-in, Right-out Island ("pork chop" concrete island)

City staff prefers the Right-in, Right-out Island. The center median causes problems with emergency vehicle access, snowplowing, and road maintenance. The owner has agreed to installing a right-in, right-out only entrance at the driveway location on Canyon Ranch Drive. A raised concrete "pork chop" median is proposed to be installed as part of the project to restrict left-turn movements coming out of the driveway. The driveway on Wedgewood Lane is proposed to be a full access that will allow both left and right turns. The owner is also in support of installing red curb along the south side of Canyon Ranch Drive in order to provide adequate sight distance coming out of the driveway. If approved, the red curb and signage would also be installed as part of the project.

City Staff acknowledges that the referenced Engineering Standard in Section 3.2.8 has not been enforced very well over the years. Accesses have been allowed closer than the 150 feet to a major intersection. Unfortunately, the City's traditional interpretation of this standard has led to traffic problems. UDOT has also raised concerns about the lack of enforcement of this issue, especially in areas close to State roads. For these reasons, this is being presented to the City Council for consideration. In discussions with the owner's engineer, City staff feels that both parties have come to an agreeable solution that both parties agree with. UDOT is also in support of allowing the driveway location based on the proposed mitigation measures.

In City Ordinance section 32-9(B), it states as follows:

"... where the subdivider can show that a provision of these general requirements and design standards would cause unnecessary hardship if strictly adhered to and where, because of topographical or other conditions peculiar to the site, in the opinion of the City Council, a departure may be made without destroying the intent of such provisions, the City Council may authorize a variance. Any variance so authorized shall be stated on the Final Plat and the reasons for such departure shall be enter in writing in the minutes of the City Council."

If the variance request is approved, it would allow the driveway location to be installed at the location that is preferred by the owner. Refer to the attached exhibit which shows the location of the temporary cul-de-sac that is proposed to be eliminated.

The following items are included with this information sheet:

- Exhibit showing the distance from Main Street to the leading edge of the driveway entrance.
- Exhibit showing the center median option.
- Exhibit showing the right-in, right-out island option.
- Email from L.R. Nelson Consulting Engineers requesting the variance and a later email stating that the owner is in support of the right-in, right-out option.

Please consider whether to approve a variance from Section 3.2.8 of the City Engineering Standards for a driveway location at 672 E. Canyon Ranch Drive.

3.2.8 ACCESS CONTROL
No driveways or other access points will be allowed within 150 feet of the intersection of two arterial streets or the intersection of an arterial street with a major collector measured from the right-of-way line to the leading edge of the driveway. Driveways and/or other access points along all arterial streets shall be no closer than 100 feet measured between the nearest edges of the driveways. Clearly Show that the proposal complies.

SITE PLAN

SCALE: 1"=30'-0" (1)

SITE INFORMATION

APN: B-1956-0007-0000

ZONING: CENTRAL COMMERCIAL (CC)

SITE AREA:

± 146,401 SF = 3.36 ACRES

BUILDING FOOTPRINT:

C-STORE WITH CARWASH: 6,895 SF.
FUEL CANOPY: 7,200 SF.

TOTAL BUILDING FOOTPRINT: 14,095 SF.

% OF SITE COVERED BY BUILDING:

BUILDING FOOTPRINT SF. / PROPERTY SF.
14,095 SF. / 146,401 SF = .096 = 10%

PARKING CALCULATION

REQUIRED PARKING PER CHAPTER 26-SECTION 26-V-3 OF THE CEDAR CITY MUNICIPAL CODE (C-STORE ONLY):

RETAIL ESTABLISHMENTS: 1 PER 600 SF. OF FLOOR AREA.

6,895 SF. / 600 SF. = 5.41 SPACES = 12 SPACES.

REQUIRED ACCESSIBLE PARKING:

2 SPACES PER 26 TO 50 TOTAL PARKING SPACES PROVIDED.

PROVIDED ON-SITE PARKING (C-STORE ONLY):

STANDARD SPACES: 34 SPACES

ACCESSIBLE SPACES: 2 SPACES (1 VAN, 1 CAR).

TOTAL SPACES: 36 SPACES

KEYNOTES

KEYNOTES BELOW APPLY TO THIS SHEET ONLY.

1. NEW ASPHALT:
   - SEE CIVIL DRAWINGS FOR DETAIL.
2. NEW CURB:
   - SEE CIVIL DRAWINGS FOR DETAIL.
3. NEW CONCRETE SLABS/WALKWAY:
   - MEDIUM BROOM FINISH ON EXTERIOR.
   - SEE CIVIL DRAWINGS FOR DETAIL.
4. NEW PARKING STRIPES:
   - 4" PAINTED WHITE STRIPES (2 COATS).
5. NEW ACCESSIBLE PARKING PAINTED ADA LOGO:
   - SEE DETAIL 3/AS1.4.
6. NEW ACCESSIBLE ROUTE:
   - 4" PAINTED WHITE STRIPES (2 COATS).
7. NEW ACCESSIBLE PARKING SIGN:
   - SEE DETAIL 2/AS1.4.
8. NEW PARKING WHEEL STOP:
   - SEE DETAIL 1/AS1.4.
9. NEW LANDSCAPE AREA:
10. NEW GREASE INTERCEPTOR:
    - SEE PLUMBING DRAWINGS FOR DETAILS.
11. NEW SAND/OIL INTERCEPTOR:
    - SEE PLUMBING DRAWINGS FOR DETAILS.
12. NEW BICYCLE RACKS:
    - INSTALL PER MFR. SPECS.
    - SEE DETAIL 5/AS1.4.
13. NEW TRAFFIC BOLLARD:
    - SEE DETAIL 4/AS1.4.
14. NEW RPPA:
    - SEE CIVIL AND PLUMBING DRAWINGS.
15. NEW RPDA:
    - SEE CIVIL AND PLUMBING DRAWINGS.
16. FUEL CANOPY:
    - SHOWN FOR REFERENCE ONLY.
    - SEE FUEL CANOPY STRUCTURAL DRAWINGS.
17. NEW FIRE HYDRANT:
    - SEE CIVIL DRAWINGS.
18. FUTURE UNDERGROUND FUEL TANKS:
    - SHOWN FOR REFERENCE ONLY.
    - UNDER SEPARATE PERMIT.
19. NEW VACUUM STATION:
    - COORDINATE INSTALLATION/REQUIREMENTS WITH MFR. REP.
    - G.C. TO PROVIDE POWER AS NEEDED.
20. NEW SHIELDED "DOWN-LIGHT" LIGHT POST:
    - SHOWN FOR REFERENCE ONLY.
    - SEE ELECTRICAL DRAWINGS.
21. NEW TRASH ENCLOSURE:
    - SEE SHEET AS1.2.
22. NEW CONCRETE:
    - SEE CIVIL DRAWINGS.
23. 6'6" TALL FLAGPOLE WITH U.S. FLAG - BY OTHERS:
    - UNDER SEPARATE PERMIT.
24. POWER POLE:
    - SEE CIVIL DRAWINGS.
25. NEW REVERSE OSMOSIS SYSTEM:
    - SEE CIVIL DRAWINGS.
26. NOT USED.
27. NEW 2-FOOT VALLEY GUTTER:
    - SEE CIVIL DRAWINGS.
28. NEW SIDEWALK:
    - SEE CIVIL DRAWINGS.
29. NEW CARWASH ENTRY SYSTEM:
    - SEE CAR WASH DRAWINGS.
30. NEW CARWASH COUNTDOWN TIMER:
    - SEE CAR WASH DRAWINGS.
31. EV CHARGING STATION:
    - PRESSURE - BOOST CHARGER 240:
    - INSTALL PER MFR. SPECS.
    - SEE ELECTRICAL DRAWINGS.
32. NEW MONUMENT SIGN:
    - SHOWN FOR REFERENCE ONLY.
    - UNDER SEPARATE PERMIT.
    - VERIFY EXACT LOCATION WITH OWNER.
    - G.C. TO PROVIDE POWER AND DATA AS NEEDED.
    - SEE ELECTRICAL DRAWINGS.
33. AIRWATER MACHINE:
    - INSTALL PER MFR. SPECS.
    - G.C. TO PROVIDE POWER AND WATER AS NEEDED.
    - SEE ELECTRICAL & PLUMBING DRAWINGS.

CONSULTANT

PLEASE RECYCLE

SCA design
2625 W. Horizon Ridge Pkwy.
Suite 220
Henderson, Nevada 89052
T 702.798.2000 F 702.798.8873

Seal

STATE OF UTAH
BRADY LOCKE CSA
CONSTRUCTION SPECIFICATIONS INSTITUTE
LICENSED

Project: TERRIBLE HERBST AT 672 E. CANYON RANCH DR

No.	Revision

Sheet Title: SITE PLAN

Dwg. Scale: AS SHOWN | Date: 08.05.2023

Drawn By: RIP | Checked By: BLC

Sheet No.

AS1.1

Project No. 22222

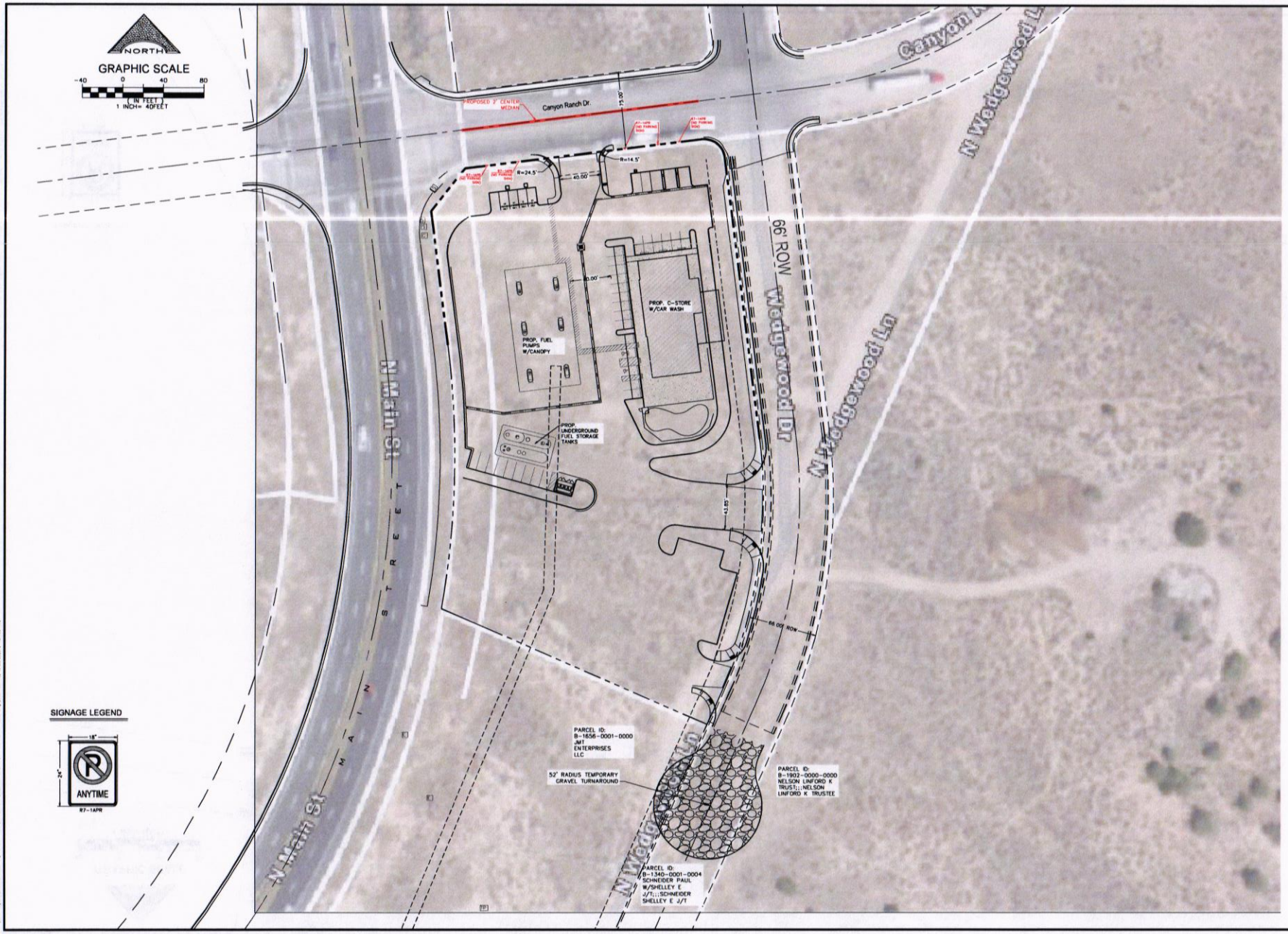

DESIGNED BY: INITIALS | DRAWN BY: INITIALS | CHKD BY: INITIALS
JOB NUMBER: JOB #
DATE: SEPTEMBER 25, 2023

NO.	REVISION	DATE	APPR.

L. R. NELSON CONSULTING ENGINEERS, LLC
STRUCTURAL
CIVIL
PLANNING
SURVEY
5785 West Russell Road, Suite 200
Las Vegas, Nevada 89118
(702) 798-7978
(702) 451-2286 FAX

CENTER MEDIAN CANYON RANCH ROAD
EXHIBIT
TERRIBLE HERBST
CEDAR CITY NEVADA

SHEET NUMBER
1
OF X SHEETS
XX-XXXXX

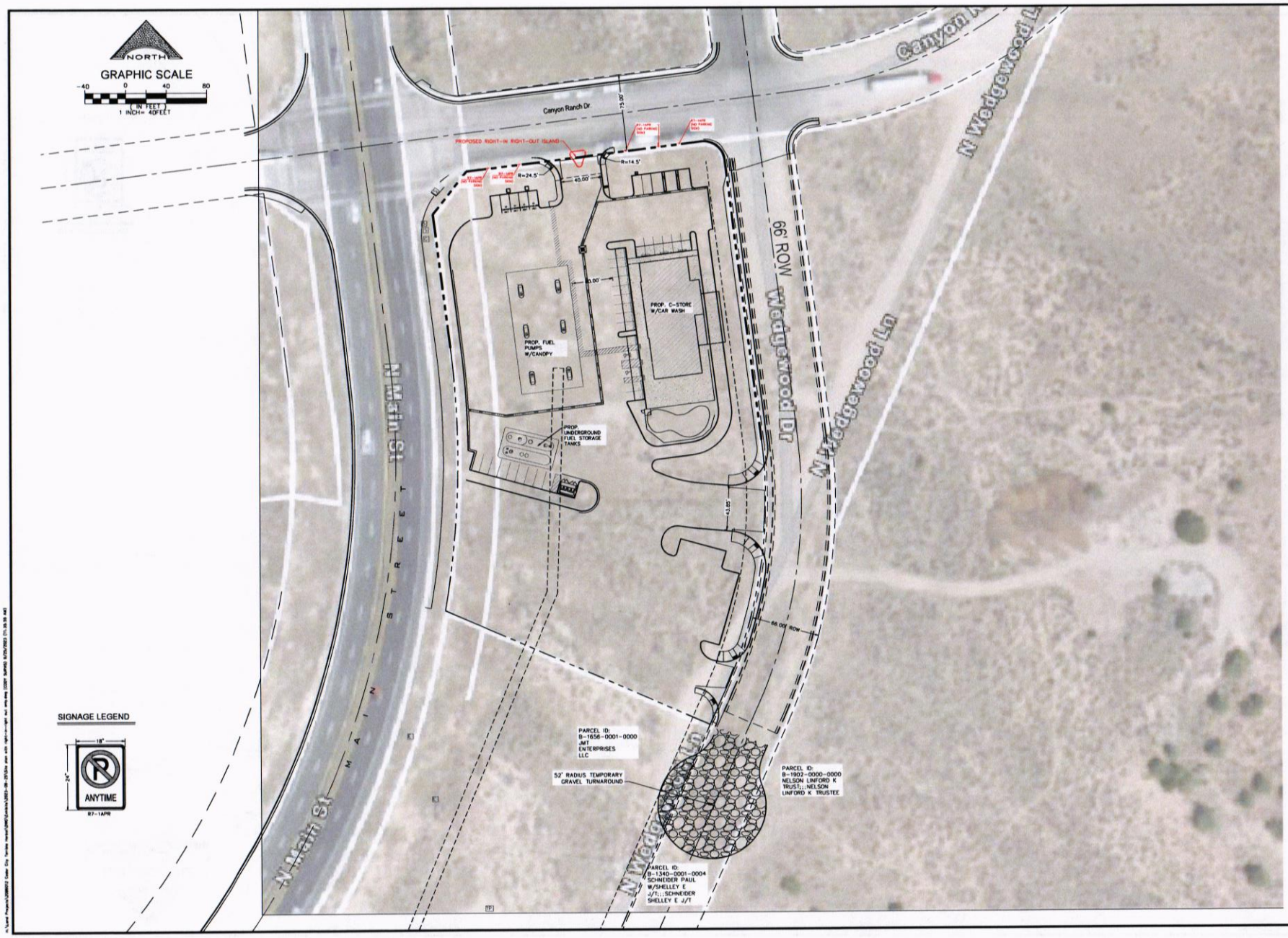

DESIGNED BY: INITIALS	DRAWN BY: INITIALS	CHKD BY: INITIALS
JOB NUMBER: JOB #	DATE: SEPTEMBER 25, 2023	

NO.	REVISION	DATE	APPL

L. R. NELSON CONSULTING ENGINEERS, LLC
STRUCTURAL
CIVIL
PLANNING
SURVEYING
6795 West Russel Road, Suite 200
Las Vegas, Nevada 89118
(702) 798-7978
(702) 457-2288 FAX

RIGHT-IN/RIGHT-OUT
EXHIBIT
TERRIBLE HERBST

CEDAR CITY NEVADA

SHEET NUMBER
1
OF X SHEETS
XX-XXXXX

Jonathan Stathis

From: Clayton L. Neilsen <clayton.neilsen@lrneng.com>
Sent: Tuesday, September 26, 2023 10:13 AM
To: Cody Survis; Donald Boudreau
Cc: Bill Maxwell; mrhodes@utah.gov; Jonathan Stathis
Subject: [EXTERNAL]: RE: Terrible Herbst, Cedar City (Driveway Variance)

Don,

Per our discussion this morning see below for the verbiage for the Variance Request:

At the request of the City Engineer and also UDOT the developer is proposing to construct a center median on Canyon Ranch Drive. The necessity of this is to prevent left turning movements out of that driveway onto Canyon Ranch Drive. With the said median we are requesting a Variance to allow for this median and for the driveway as it is less than 150' from the curb return at Main Street and Canyon Ranch Dr. We are also proposing to post "No Parking" on Canyon Ranch Drive.

Clayton L. Neilsen, P.E.
Vice President/Civil Department Manager
L. R. NELSON CONSULTING ENGINEERS LLC
Where Experience Shapes the Future
6765 WEST RUSSELL ROAD, SUITE 200
LAS VEGAS, NEVADA 89118
Work: 702.798.7978
Fax: 702.451.2296
Cell: 702-249-4230
AZ, ID, NE, NV, OR, UT, and WY -- CE
Office Hours: M-TH 7:30AM-Noon & 1PM-5:30PM, Friday 8AM-Noon

From: Cody Survis <Cody.Survis@lrneng.com>
Sent: Monday, September 25, 2023 2:04 PM
To: Donald Boudreau <bdonald@cedarcity.org>
Cc: Bill Maxwell <mbill@cedarcity.org>; Clayton L. Neilsen <clayton.neilsen@lrneng.com>; Matthew Rhodes <mrhodes@utah.gov>; Jonathan Stathis <jstathis@cedarcity.org>
Subject: Terrible Herbst, Cedar City (Driveway Variance)

Hello Don,

It was good speaking with you today. I have attached a couple different options for the driveway variance off Canyon Ranch Drive for the City Council meeting on October 4th. Let me know if you have any questions or concerns with these options from a Planning standpoint.

Thank You,

Cody Survis
Project Manager
Civil Department
L. R. NELSON CONSULTING ENGINEERS, LLC
Structural • Civil • Survey • Planning • Forensics
Where Experience Shapes the Future
6765 WEST RUSSELL ROAD, SUITE 200
LAS VEGAS, NEVADA 89118

Phone: 702.798.7978
Fax: 702/451-2296
Cell: 435/233-8747
cody.survis@lrneng.com
Office Hours: M-TH 7:30AM-Noon & 1PM-5:30PM, Friday 8AM-Noon

Jonathan Stathis

From: Cody Survis <Cody.Survis@lrneng.com>
Sent: Friday, September 29, 2023 12:44 PM
To: Jonathan Stathis
Cc: Clayton Neilsen
Subject: [EXTERNAL]: RE: [EXTERNAL] RE: Terrible's driveway access

Good morning Jonathan,

I have spoke with the owners and they had agreed to the pork chop option with the signage and striping to indicating "No left Turn". Please let me know if you have any other questions or concerns.

Thank You,

Cody Survis
Project Manager
Civil Department
L. R. NELSON CONSULTING ENGINEERS, LLC
Structural • Civil • Survey • Planning • Forensics
Where Experience Shapes the Future
6765 WEST RUSSELL ROAD, SUITE 200
LAS VEGAS, NEVADA 89118
Phone: 702.798.7978
Fax: 702/451-2296
Cell: 435/233-8747
cody.survis@lrneng.com
Office Hours: M-TH 7:30AM-Noon & 1PM-5:30PM, Friday 8AM-Noon

From: Jonathan Stathis <jstathis@cedarcity.org>
Sent: Friday, September 29, 2023 10:18 AM
To: Cody Survis <Cody.Survis@lrneng.com>; Clayton L. Neilsen <clayton.neilsen@lrneng.com>
Subject: [EXTERNAL] RE: Terrible's driveway access

Cody and Clayton -

I'm out of town this week and I don't have access to cell phone service. So I will try to convey my thoughts by email.

The center median option is not preferred by City staff. Medians cause problems for emergency vehicle access. Also, medians cause issues with snow plowing and road maintenance.

City staff's preference would be a "pork chop" at the entrance to restrict left turns coming out of the driveway. The next best option would be to install signs and striping indicating "no left turn".

I understand that your preference is the center median. However, I want to see if you and the owner would open to one of the other options.

I would like to make sure that we're all on the same page before presenting this to the City Council.

Can you please consider this and discuss with the owner today? I need to get a write-up ready for the City Council by Monday morning at 10:00 AM. I apologize for the short timeframe on this. I have access to email, so please email me today as soon as possible with your thoughts on this. Also, please let me know if you have any questions. Thank you.

Thanks,
Jonathan Stathis

Get Outlook for Android

CEDAR CITY
CITY COUNCIL AGENDA ITEM 6
STAFF INFORMATION SHEET

To: Mayor and City Council

From: City Engineer

Council Meeting Date: October 4, 2023

Subject: **Consider an amendment to the City Traffic Ordinance to establish a No Parking zone in the vicinity of 672 E. Canyon Ranch Drive.**

Discussion: As part of the new Terrible's Gas Station project, there is a No Parking zone that is being requested along the south side of Canyon Ranch Drive. The "No Parking" zone would extend along the frontage of the property from Main Street to Wedgewood Lane. The purpose of the No Parking zone is to allow for safe turning movements for vehicles into the new driveway access for Terrible's. The close proximity of the driveway access to both Main Street and Wedgewood Lane limits the sight distance if vehicles are parked along the side of the road. The no parking zone will help alleviate any sight distance issues through this area.

If approved, City Ordinance section 35-10-B will need to be amended to add this location to the list of restricted parking areas.

Proper signage and red curbing would need to be installed as part of the Terrible's project. The signage and red curb would then need to be maintained by the City. The attached exhibit shows the proposed location of the No Parking zone on the south side of Canyon Ranch Drive.

Please consider whether to approve the No Parking restrictions on the south side of Canyon Ranch Drive from Main Street to Wedgewood Lane.

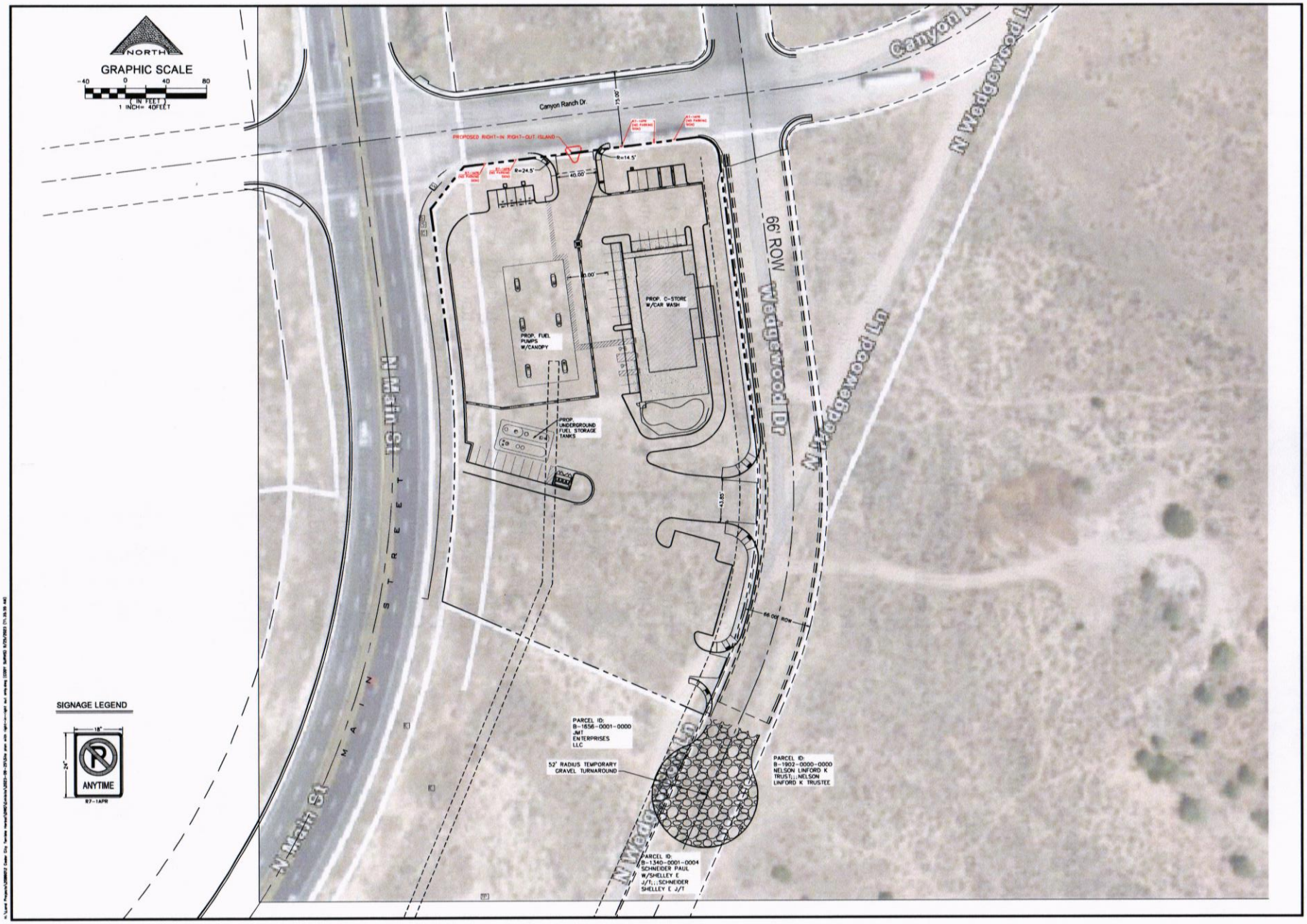

DESIGNED BY: INITIALS	DRAWN BY: INITIALS	CHKD BY: INITIALS
JOB NUMBER: JOB #	DATE: SEPTEMBER 25, 2023	

NO.	REVISION	DATE	APPL.

L. R. NELSON CONSULTING ENGINEERS, LLC
STRUCTURAL
CIVIL
PLANNING
SURVEYING
8795 West Russell Road, Suite 200
Las Vegas, Nevada 89118
(702) 798-7979
(702) 431-2296 FAX

RIGHT-IN/RIGHT-OUT
EXHIBIT
TERRIBLE HERBST

CEDAR CITY NEVADA

SHEET NUMBER
1
OF X SHEETS
XX-XXXXX

CEDAR CITY COUNCIL
AGENDA ITEMS - 7
DECISION PAPER

TO: Mayor and City Council

FROM: City Attorney

DATE: October 2, 2023

SUBJECT: Copper Valley Townhomes PUD Phase 1 (formerly known as the Iron West PUD) located at 200 North 4500 West

DISCUSSION:

The Copper Valley Townhomes PUD Phase 1, formerly the Iron West PUD, is located in the vicinity of 200 North 4500 West. The City has received payment of the required fees. Additionally, as of the time of this memo, although we received a title report, there are a couple of issues that still need to be resolved: first, the owner names between the title report and the final plat do not match (title report lists Windmill Plaza LLC and Joseph and Beverly Burgess, but the Final Plat lists Copper Valley Townhomes LLC), and second, we need a sign-off from State Bank of Southern Utah, which holds a Construction Deed of Trust on the property. Staff will update you on these issues at the Council meeting.

The Final Plat indicates an intent to request a variance from the Engineering Standards to not underground the power lines along SR 56. Because Staff's interpretation of the applicable standard does not require the undergrounding of those power lines, the variance is not necessary.

Per UCA 10-9a-604.5, the Developer is requesting final plat approval subject to the City receiving the bond. The Developer is aware that the final plat will not be recorded until the bond and bond agreement are in place.

Please consider approval of the final plat for the Copper Valley Townhomes PUD Phase 1.

FINAL PLAT OF:
COPPER VALLEY TOWNHOMES PUD, PHASE 1

LOCATED IN SECTION 12, T36S, R12W, SLB&M, CEDAR CITY, UTAH

40 0 40'
SCALE IN FEET

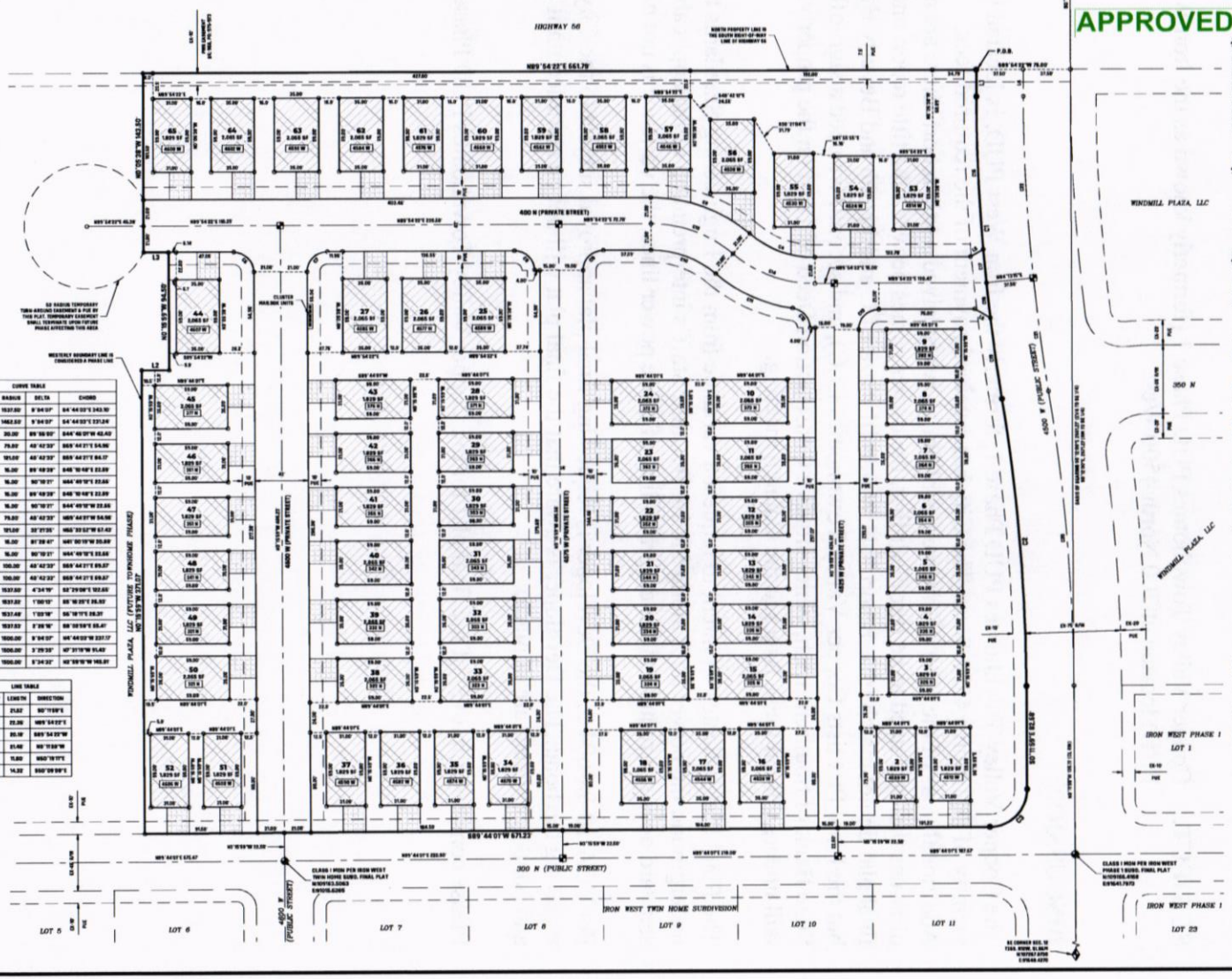

APPROVED

CURVE TABLE				
CURVE #	LENGTH	RADIUS	DELTA	CHORD
C1	243.35	1537.50	9°04'07"	S4°44'33"E 243.10'
C2	227.48'	1462.50'	9°04'07"	S4°44'33"E 227.24'
C3	47.09	30.00	89°39.95"	S44°46'37"W 42.42'
C4	55.13	79.00	40°42'33"	S65°44'21"E 54.00'
C5	85.97	121.00	40°42'33"	S65°44'21"E 84.17'
C6	25.09	16.00	89°49.29"	S45°10'40"E 22.59'
C7	25.16	16.00	90°10.21"	N44°49'15"E 22.66'
C8	25.09	16.00	89°49.29"	S45°10'40"E 22.59'
C9	25.16	16.00	90°10.21"	S44°49'15"W 22.66'
C10	55.13	79.00	40°42'33"	N65°44'21"W 54.00'
C11	68.24	121.00	32°31.25"	N66°33'52"W 67.32'
C12	23.70	16.00	81°38.47"	N41°50'19"W 20.89'
C13	25.16	16.00	90°10.21"	N44°49'15"E 22.66'
C14	71.03	100.00	40°42'33"	S65°44'21"E 69.57'
C15	71.03	100.00	40°42'33"	N65°44'21"W 69.57'
C16	122.68	1537.50	4°34.19"	S2°29.06"E 122.65'
C17	26.04	1537.50	1°00.13"	S5°18.25"E 26.03'
C18	26.31	1537.50	1°03.18"	S6°18.17"E 26.31'
C19	55.42	1537.50	2°28.18"	S8°30.53"E 55.41'
C20	237.42	1500.00	9°04.07"	N4°44.33"W 237.17'
C21	91.48	1500.00	3°29.25"	N7°31.19"W 91.43'
C22	145.97	1500.00	5°34.23"	N2°39.16"W 145.91'

LINE TABLE		
LINE #	LENGTH	DIRECTION
L1	21.62	N0°19.59"E
L2	22.36	N89°54.22"E
L3	20.10	S89°54.22"W
L4	21.62	N0°19.59"W
L5	11.60	N50°19.17"E
L6	14.32	S50°39.56"E

SURVEYOR'S CERTIFICATE

I, DALLAS R. BUCKNER, PROFESSIONAL UTAH LAND SURVEYOR NO. 1062249-2201, HOLD A LICENSE IN ACCORDANCE WITH TITLE 58, CHAPTER 22, PROFESSIONAL ENGINEERS AND LAND SURVEYORS LICENSING ACT. HEREBY CERTIFY THAT THIS MAP REPRESENTS A SURVEY MADE UNDER MY DIRECTION OF "COPPER VALLEY TOWNHOMES PUD, PHASE 1", A RESIDENTIAL SUBDIVISION LOCATED IN CEDAR CITY, UTAH. MONUMENTS WILL BE PLACED AS REPRESENTED ON THIS PLAT. THE LEGAL DESCRIPTION AND PLAT ARE TRUE AND CORRECT.

DALLAS R. BUCKNER P.L.S. NO. 1062249-2201

PHASE 1 BOUNDARY DESCRIPTION (9.51 AC)

BEGINNING AT A POINT S00°12'00"E ALONG THE SECTION LINE 133.37 FEET AND S89°54'22"W 75.00 FEET FROM THE EAST 1/4 CORNER, SECTION 12, TOWNSHIP 36 SOUTH, RANGE 12 WEST, SALT LAKE BASE AND MERIDIAN, SAID POINT BEING ON THE WESTERLY LINE OF 4800 WEST; THENCE ALONG SAID WESTERLY LINE S00°11'09"E 31.00 FEET TO A POINT OF CURVATURE TO THE LEFT HAVING A RADIUS OF 1,537.50 FEET AND A CENTRAL ANGLE OF 09°04'07"; THENCE ALONG THE ARC OF SAID CURVE 243.35 FEET TO A POINT OF REVERSE CURVATURE TO THE RIGHT HAVING A RADIUS OF 1,462.50 FEET AND A CENTRAL ANGLE OF 09°04'07"; THENCE ALONG THE ARC OF SAID CURVE 231.48 FEET; THENCE S00°11'09"E 85.58 FEET TO A POINT OF CURVATURE TO THE RIGHT HAVING A RADIUS OF 30.00 FEET AND A CENTRAL ANGLE OF 89°39'00"; THENCE ALONG THE ARC OF SAID CURVE 47.09 FEET TO A POINT ON THE NORTH LINE OF 300 NORTH; THENCE ALONG SAID NORTH LINE S89°44'01"W 671.23 FEET; THENCE DEPARTING SAID NORTH LINE N00°15'59"W 371.07 FEET; THENCE N89°54'22"E 22.36 FEET; THENCE N00°19'59"W 94.50 FEET; THENCE S89°54'22"W 20.10 FEET; THENCE N00°20'38"W 143.80 FEET TO A POINT ON THE SOUTH LINE OF HIGHWAY 56; THENCE ALONG SAID SOUTH LINE N89°54'22"E 661.79 FEET TO THE POINT OF BEGINNING.

LEGEND

- "GO CIVIL END" R/C TO BE SET
- NOT SET
- CLASS I MONUMENT TO BE SET OR AS NOTED
- CLASS II MONUMENT TO BE SET
- CLUSTER MAILBOX UNITS
- PRIVATE AREA
- LIMITED COMMON AREA (DRIVEWAY)
- COMMON AREA

NOTES:

1. THIS PROJECT FALLS WITHIN THE AIRPORT INFLUENCE ZONE (AIZ).
2. THIS PROJECT IS ZONED RESIDENTIAL-3-M (DWELLING, 3 UNIT).
3. BUILDING SETBACKS ARE 20' FROM A PUBLIC DEDICATED STREET AND OF A RESIDENTIAL PUD SHALL BE THE SAME AS THE UNDERLYING ZONE WITH EXCEPTION THAT PERIMETER PROPERTY LINES NOT DESIGNATED AS A FRONT OR REAR PROPERTY LINE SHALL BE 10 FEET.
4. PUBLIC UTILITY EASEMENTS WILL BE 10' ALONG FRONT LOT LINES ADJACENT TO THE STREETS & 7.5' ALONG THE SUBDIVISION BOUNDARY AS SHOWN ON THIS PLAT.
5. PROPERTY IS LOCATED IN FLOOD ZONE C, AREAS OF MINIMAL FLOODING. SOURCE OF INFORMATION: FIRM MAP PANEL NO. 49001C-0725B, EFFECTIVE DATE: JULY 17, 1986. REVISED TO REFLECT LOMR DATED FEBRUARY 15, 2004.
6. ALL COMMON AREAS IN THE P.U.D. WILL BE A PUBLIC UTILITY EASEMENT.
7. ALL ROADS SHOWN WITHIN THE PUD BOUNDARY ARE PRIVATE AND SHALL BE ACCESSED BY A COMMERCIAL DRIVEWAY TO DIFFERENTIATE PRIVATE ROADS.
8. INDIVIDUAL TRASH CANS ARE PROPOSED TO BE PICKED UP BY CEDAR CITY TRASH.
9. WATER PRESSURE IN THIS AREA IS APPROXIMATELY 100 PSI BY IRON WEST PRV PER ROBBIE MITCHELL WITH CEDAR CITY WATER DEPARTMENT.
10. THE SEWER MAIN DEPTH FOR THIS SUBDIVISION IS LESS THAN THE CEDAR CITY STANDARD OF 9', WHICH MAY RESTRICT BASEMENTS.
11. A VARIANCE FROM CITY COUNCIL IS REQUESTED AT THE APPROVAL OF THIS FINAL PLAT TO NOT UNDERGROUND THE EXISTING POWER LINES ALONG HIGHWAY 56.
12. DASHED TIE LINES SHOWN TO TOWNHOME UNITS ARE MEASURED PERPENDICULAR TO PRIVATE STREETS THAT IT'S TIED FROM.
13. LIMITED COMMON AREA FOR DRIVEWAYS ARE SHOWN FOR REFERENCE ONLY AND SHALL BE BASED ON THE ACTUAL DRIVEWAY LOCATION AS CONSTRUCTED WITH THE TOWNHOME UNIT. REFER TO DETAIL SHEET 2.
14. DUE TO SOIL CONDITIONS EXISTING IN CEDAR CITY, UTAH WHICH OCCASIONALLY CAUSE SOILS SUBSIDENCE PROBLEMS RESULTING IN DAMAGE TO STRUCTURES ERECTED THEREON, THE CITY COUNCIL OF CEDAR CITY REQUIRED THE DEVELOPERS OF COPPER VALLEY TOWNHOMES PUD, PHASE 1 TO CONDUCT TESTING OF THE SOIL CONDITIONS EXISTING IN SAID SUBDIVISION. A COPY OF THE FINDINGS OF THAT TESTING, ALONG WITH RECOMMENDATIONS BASED ON THE SAME, HAS BEEN FILED WITH THE SUBDIVIDER OF THE PROPERTY, WHOSE NAME AND ADDRESS ARE LISTED BELOW, AND WITH THE CITY ENGINEER OF CEDAR CITY, UTAH. COPIES OF THIS REPORT MAY BE INSPECTED AT BOTH LOCATIONS BY THE GENERAL PUBLIC AND ANY PERSONS INTERESTED IN PURCHASING PROPERTY LOCATED WITHIN SAID SUBDIVISION.

SUBDIVIDER: COPPER VALLEY TOWNHOMES LLC
ADDRESS: 1125 N. HONI HILLS DRIVE
CEDAR CITY, UT 84721

REFERENCES:

-IRON WEST PHASE 1 SUBDIVISION FINAL PLAT

-IRON WEST TWIN HOME SUBDIVISION FINAL PLAT.

-RECORD OF SURVEY MAP FOR JOE BURGESS, PREPARED BY GRIMSHAW SURVEYING INC., PLAT #1697, FILE DATE 5-17-06, IRON COUNTY RECORDS.

-MINOR SUBDIVISION AND ROAD DEDICATION FOR WINDMILL PLAZA, PREPARED BY GO CIVIL ENGINEERING, BOOK: 1627, PAGE 362 IRON COUNTY RECORDS.

AREA USE TABULATION	
PHASE 1 AREA	9.51 AC
TO BE CITY OWNED (ROAD DEDICATION)	0.00 AC
PRIVATE AREA	2.90 AC (30%)
COMMON/LIMITED COMMON AREA	6.61 AC (70%)
GREEN SPACE/ OPEN SPACE REQUIRED (35% OF TOTAL AREA)	3.33 AC
GREEN SPACE/OPEN SPACE PROVIDED (41% OF TOTAL AREA)	4.06 AC

CERTIFICATE OF RECORDING

I, CARRI JEFFRIES , COUNTY RECORDER OF IRON COUNTY, DO HEREBY CERTIFY THAT THIS FINAL PLAT WAS FILED FOR RECORD IN MY OFFICE ON THIS THE ____ DAY OF _____, 20___.

BOOK _____ PAGE _____

COUNTY RECORDER - CARRI JEFFRIES

ENTRY NO. _____ FEE _____

RECORDED AT THE REQUEST OF _____

NO.	DESCRIPTION	BY	DATE
	REVISIONS		

GO CIVIL ENGINEERING
990 N. 800 W., CEDAR CITY, UT 84721
(435) 586-9959 WWW.GOCIVIL.NET

FINAL PLAT OF:
COPPER VALLEY TOWNHOMES PUD, PHASE 1
FOR
COPPER VALLEY TOWNHOMES LLC
LOCATED IN SECTION 12, T36S, R12W, SLB&M, CEDAR CITY, UTAH

CHECKED:
SCALE: 1" = 40'
DRAWN: MP
DATE: 7/25/23
SHEET: 1 OF 2

OWNER'S DEDICATION

KNOW ALL MEN BY THESE PRESENTS THAT WE, THE UNDERSIGNED OWNERS OF THE LAND DESCRIBED HEREON HAVING CAUSED THE SAME TO BE SUBDIVIDED INTO TOWN HOUSE UNITS, PRIVATE STREETS, COMMON AREAS AND EASEMENTS TO BE KNOWN HEREAFTER AS COPPER VALLEY TOWNHOMES PUD, PHASE 1

AND DO HEREBY DEDICATED TO THE COMMON USE AND ENJOYMENT OF THE HOMEOWNERS ASSOCIATION, TOWN HOUSE OWNERS AND PUBLIC UTILITY COMPANIES IN SAID P.U.D., BUT NOT TO THE USE OF THE GENERAL PUBLIC, ALL COMMON AREAS, AND EASEMENTS AS SHOWN ON THE PLAT, IN ACCORDANCE WITH THE TERMS AND CONDITIONS OF THE DEDICATIONS OF SAID COMMON AREA AS MORE PARTICULARLY SET FORTH IN THE "DECLARATION OF COVENANTS, CONDITIONS AND RESTRICTIONS" COVERING THE HEREON DESCRIBED TRACT OF LAND AND WHICH IS RECORDED HEREWITH AND HEREBY INCORPORATED BY REFERENCE AND MADE A PART OF THIS PLAT.
DATED THIS _____ DAY OF _____, 20___.

IN WITNESS WHEREOF:
WE HAVE SET OUR HANDS THIS _____ DAY OF _____ A.D. 20____.

_____
JEFF BURGESS-MANAGING MEMBER
COPPER VALLEY TOWNHOMES LLC

ACKNOWLEDGEMENT

STATE OF UTAH)
S.S.
COUNTY OF IRON)

ON THIS THE _____ DAY OF _____, 20_____, PERSONALLY APPEARED BEFORE ME THE UNDERSIGNED NOTARY PUBLIC, _____, THE SIGNER OF THE OWNER'S DEDICATION, IN AND FOR THE COUNTY OF IRON, IN THE STATE OF UTAH, WHO DULY ACKNOWLEDGED TO ME THAT HE EXECUTED SAID DEDICATION FOR THE PURPOSES STATED THEREIN.

FULL NAME SIGNATURE:_____
FULL NAME PRINT:_____
COMMISSION No.:_____
EXPIRATION DATE:_____
STAMP NOT REQUIRED PER UTAH CODE 46-1-16(6)

POST OFFICE APPROVAL

THE UNITED STATES POSTAL SERVICE HEREBY APPROVES THE LOCATIONS SHOWN FOR NEIGHBORHOOD DELIVERY AND COLLECTION BOX UNITS (N.D.C.B.U.).

_____ _____
POSTMASTER DATE

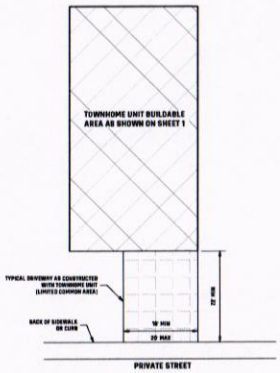

TYPICAL TOWNHOME UNIT

N.T.S.

CITY ENGINEER'S APPROVAL

I, JONATHAN STATHIS, CEDAR CITY ENGINEER, DO HEREBY CERTIFY THAT THIS FINAL PLAT WAS EXAMINED AND ACCEPTED BY ME THIS THE _____ DAY OF _____, 20____.

_____
JONATHAN STATHIS - CITY ENGINEER

CITY ATTORNEY'S APPROVAL

I, RANDALL MCUNE, CEDAR CITY ATTORNEY FOR CEDAR CITY CORPORATION, DO HEREBY CERTIFY THAT I HAVE EXAMINED THIS FINAL PLAT AND THAT SAID PLAT MEETS THE REQUIREMENTS OF CEDAR CITY CORPORATION PURSUANT TO ITS ORDINANCES AND IS HEREBY RECOMMENDED FOR APPROVAL ON THIS THE _____ DAY OF _____, 20___.

_____
RANDALL MCUNE - CITY ATTORNEY

PLANNING COMMISSION APPROVAL

I, ADAM HAHN, CHAIRPERSON OF THE CEDAR CITY PLANNING COMMISSION, DO HEREBY CERTIFY THAT THIS FINAL PLAT WAS APPROVED BY SAID COMMISSION.

_____ _____
ADAM HAHN - CHAIRPERSON DATE

CERTIFICATE OF ACCEPTANCE

I, GARTH GREEN, MAYOR OF CEDAR CITY CORPORATION, DO HEREBY CERTIFY THAT THIS FINAL PLAT HAS BEEN APPROVED BY THE CITY COUNCIL AND IS HEREBY ORDERED FILED FOR RECORD IN THE OFFICE OF THE IRON COUNTY RECORDER ON THIS THE _____ DAY OF _____, 20____.

BY:_____ ATTEST:_____
GARTH GREEN, MAYOR RENON SAVAGE, CITY RECORDER

UTILITY COMPANY APPROVAL

WE, THE HEREIN NAMED PUBLIC UTILITY COMPANIES, APPROVE THE GRANT OF THE DESIGNATED EASEMENTS SHOWN ON THIS SUBDIVISION PLAT, SUBJECT TO THE HEREON UTILITIES NOTE.

_____ _____
LUMEN TECHNOLOGIES DATE

_____ _____
ROCKY MOUNTAIN POWER DATE

_____ _____
DOMINION ENERGY DATE

_____ _____
TDS DATE

_____ _____
SOUTH CENTRAL COMMUNICATION DATE

UTILITIES NOTE

UTILITY COMPANIES SHALL HAVE THE RIGHT TO INSTALL MAINTAIN, AND OPERATE THEIR EQUIPMENT ABOVE AND BELOW GROUND AND ALL OTHER RELATED FACILITIES WITHIN THE PUBLIC UTILITY EASEMENTS IDENTIFIED ON THIS PLAT AS MAY BE NECESSARY OR DESIRABLE IN PROVIDING UTILITY SERVICES WITHIN AND WITHOUT THE LOTS IDENTIFIED HEREIN, INCLUDING THE RIGHT OF ACCESS TO SUCH FACILITIES AND THE RIGHT TO REQUIRE REMOVAL OF ANY OBSTRUCTION INCLUDING STRUCTURES, TREES AND VEGETATION THAT MAYBE PLACED IN THE P.U.E. THE UTILITY COMPANY MAY REQUIRE THE LOT OWNER TO REMOVE ALL STRUCTURES WITHIN THE P.U.E. AT THE LOT OWNER'S EXPENSE, OR THE UTILITY COMPANY MAY REMOVE SUCH STRUCTURES AT THE LOT OWNER'S EXPENSE. AT NO TIME MAY ANY PERMANENT STRUCTURES BE PLACED WITHIN THE P.U.E. OR ANY OTHER OBSTRUCTION WHICH INTERFERES WITH THE USE OF THE P.U.E. WITHOUT THE PRIOR WRITTEN APPROVAL OF THE UTILITY COMPANY WITH FACILITIES IN P.U.E.

ROCKY MOUNTAIN POWER APPROVES THIS PLAT SOLELY FOR THE PURPOSES OF CONFIRMING THAT THE PLAT CONTAINS PUBLIC UTILITY EASEMENTS. ROCKY MOUNTAIN POWER MAY REQUIRE OTHER EASEMENTS IN ORDER TO SERVE THIS DEVELOPMENT. THIS APPROVAL DOES NOT CONSTITUTE ABROGATION OR WAIVER OF ANY OTHER EXISTING RIGHTS, OBLIGATIONS OR LIABILITIES PROVIDED BY LAW OR EQUITY. THIS APPROVAL DOES NOT CONSTITUTE ACCEPTANCE, APPROVAL OR ACKNOWLEDGEMENT OF ANY TERMS CONTAINED IN THE PLAT, INCLUDING THOSE SET FORTH IN THE OWNER'S DEDICATION AND THE NOTES AND DOES NOT CONSTITUTE A GUARANTEE OF PARTICULAR TERMS OF ELECTRIC UTILITY SERVICE.

NO.	DESCRIPTION	BY	DATE

REVISIONS

GO CIVIL ENGINEERING
590 N. 800 W. CEDAR CITY, UT 84721
P:(435) 586-2992 WWW.GOCIVIL.NET

FINAL PLAT OF:
COPPER VALLEY TOWNHOMES PUD, PHASE 1
FOR
COPPER VALLEY TOWNHOMES LLC

LOCATED IN SECTION 12, T36S, R12W, SL&BM, CEDAR CITY, UTAH

CHECKED:	
SCALE: N.T.S.	DRAWN: MP
DATE: 7/25/23	SHEET: 2 OF 2

CEDAR CITY CORPORATION
FY 24 Capital Budgets
As of 10/1/23

Fund	Account	Project	Funding Source	*Original Budget*	*Revised Budget*	*FY24 Total Budget*	*Prior Year Roll-Forward*
G - City Building	10-42-730	Carpeting City Hall	Capital Improvement Fund	207,410	207,410	**120,077**	X
G - Economic Development	10-60-740	Welcome Sign 200 North	Capital Improvement Fund	15,000	15,000	**15,000**	X
G - Police	10-70-700	Lenslock	General Fund	110,000	110,000	**110,000**	
G - Police	10-70-740	Ballistic Helmets / Plates	Capital Improvement Fund	31,000	31,000	**31,000**	
G - Police	10-70-740	Driver Feedback Signs	Capital Improvement Fund	20,000	20,000	**20,000**	
G - Police	10-70-741	Vehicles (1@$57,000 - 1@$49,000 - 4@$75,000)	General Fund	100,000	100,000	**100,000**	
G - Police	10-70-741	Vehicles (1@$57,000 - 1@$49,000 - 4@$75,000)	Capital Improvement Fund	200,000	200,000	**200,000**	
G - Police	10-70-741	Vehicles (1@$65,087)	Capital Improvement Fund	191,261	191,261	**66,000**	X
G - Fire	10-73-720	Fire Station #4 Land Acquisition / Architectural Design	Capital Improvement Fund	558,000	908,000	**747,730**	X
G - Fire	10-73-741	Ladder Truck	Capital Improvement Fund	1,706,000	500,000	**500,000**	
G - Fire	10-73-741	Rapid Response Truck	Capital Improvement Fund	100,000	135,000	**111,198**	X
G - Fire	10-73-741	Squad #11 Refurbishment	Capital Improvement Fund	113,600	113,600	**113,600**	
G - Fleet	10-78-740	A/C Machine	Capital Improvement Fund	9,000	9,000	**9,000**	
G - Streets & Highways	10-79-730	1600 North and Lund Highway Intersection	C-Road Fund	169,000	169,000	**14,795**	X
G - Streets & Highways	10-79-730	Bulldog Intersection Improvement	C-Road Fund	509,768	509,768	**360,481**	X
G - Streets & Highways	10-79-732	Traffic Signal Kitty Hawk / Airport Road	Capital Improvement Fund	350,000	350,000	**25,184**	X
G - Streets & Highways	10-79-736	Cody Drive	C-Road Fund	600,000	600,000	**600,000**	
G - Streets & Highways	10-79-738	Flood Control Projects	General Fund	-	4,114,341	**1,442,846**	X
G - Streets & Highways	10-79-740	Elgin Mechanical Sweeper	Capital Improvement Fund	280,000	280,000	**280,000**	X
G - Streets & Highways	10-79-741	Dump Truck (with plow and sander)	C-Road Fund	284,500	306,500	**306,500**	
G - Streets & Highways	10-79-741	Sander - For Ford 550 Truck	C-Road Fund	19,500	19,500	**19,500**	
G - Engineering	10-81-310	Grant - Safe Streets for All	Federal Grant	52,000	52,000	**52,000**	
G - Engineering	10-81-310	Traffic Studies: Old Hwy 91/Greens Lake, 600 S/1100 W, Roya	General Fund	45,000	45,000	**45,000**	
G - Engineering	10-81-740	Large Format Color Plotter	Capital Improvement Fund	8,500	8,500	**8,500**	
G - Parks & Cemetery	10-83-710	Land Acquisition Main Street Park	Capital Improvement Fund / General	-	900,000	**155,890**	X
G - Parks & Cemetery	10-83-732	Cemetery Expansion	Capital Improvement Fund	200,000	200,000	**200,000**	
G - Parks & Cemetery	10-83-732	Cemetery Irrigation & Roads	Capital Improvement Fund	50,000	50,000	**50,000**	X
G - Parks & Cemetery	10-83-732	Cemetery Phase II Expansion	Capital Improvement Fund	200,000	200,000	**200,000**	X
G - Parks & Cemetery	10-83-732	Cemetery Renovation / Addition	Capital Improvement Fund	200,000	200,000	**200,000**	X
G - Parks & Cemetery	10-83-734	Dugout Renovation & Transformer Relocation	Capital Improvement Fund	43,500	43,500	**24,420**	X
G - Parks & Cemetery	10-83-734	Little League Bleacher Canopies	Capital Improvement Fund	48,000	48,000	**48,000**	X
G - Parks & Cemetery	10-83-734	Little League Parking Lot	Capital Improvement Fund	172,325	344,650	**88,996**	X
G - Parks & Cemetery	10-83-734	Pickleball Court Amenities	Iron County Grant	-	100,000	**86,162**	X
G - Parks & Cemetery	10-83-740	Aerator / Seeder	Capital Improvement Fund	17,000	17,000	**17,000**	
G - Parks & Cemetery	10-83-740	Heavy Duty Utility Vehicle	Capital Improvement Fund	36,000	36,000	**24,800**	X
G - Parks & Cemetery	10-83-740	Mower	Capital Improvement Fund	25,000	25,000	**25,000**	
G - Parks & Cemetery	10-83-742	Fiddlers Canyon Park	Capital Improvement Fund	500,000	500,000	**500,000**	
G - Parks & Cemetery	10-83-790	Bicentennial Renovation	RAP Tax	265,000	723,200	**114,471**	X
G - Parks & Cemetery	10-83-790	Fiddler's Canyon Park / Retention Basin	RAP Tax	-	434,686	**434,686**	X
G - Parks & Cemetery	10-83-790	Fiddler's Canyon Park Improvements	RAP Tax	-	487,967	**487,967**	
G - Parks & Cemetery	10-83-790	Infield Groomers (2)	RAP Tax	-	57,000	**57,000**	
G - Parks & Cemetery	10-83-790	Outdoor Pickleball Courts	RAP Tax	-	919,770	**150,256**	X
G - Parks & Cemetery	10-83-790	Skate Park Replacement	RAP Tax	-	160,377	**160,377**	
G - Parks & Cemetery	10-83-790	Trails - Land for Trail	RAP Tax	75,000	225,831	**225,831**	X
G - Parks & Cemetery	10-83-952	Fiddlers Canyon Trail	UDOT Grant	341,640	341,640	**341,640**	
G - Library	10-87-730	Modifying Exterior Wall Around Chiller	Capital Improvement Fund	8,000	8,000	**8,000**	
G - Library	10-87-740	Computer Rotation	Capital Improvement Fund	6,400	6,400	**6,400**	
G - Cross Hollow Complex	10-90-740	Roping Boxes, Chutes	Capital Improvement Fund	40,445	40,445	**40,445**	
G - Cross Hollow Complex	10-90-740	Roping Boxes, Chutes	Iron County Grant	40,445	40,445	**40,445**	
G - Cross Hollow Complex	10-90-740	Stalls, Locks, Equipment/Cement, Hydrants	Capital Improvement Fund	139,540	139,540	**139,540**	
G - Cross Hollow Complex	10-90-740	Stalls, Locks, Equipment/Cement, Hydrants	Iron County Grant	139,540	139,540	**139,540**	

#8

Fund	Account	Project	Funding Source	*Original Budget*	*Revised Budget*	*FY24 Total Budget*	*Prior Year Roll-Forward*
G - Cross Hollow Complex	10-90-790	Arena Bleacher Replacement	RAP Tax	-	33,000	**33,000**	
G - Cross Hollow Complex	10-90-970	Horse Stalls, Diamond Z Expansion	Private Donation	100,000	400,000	**314,000**	X
G - Heritage Center/Festival Hall	10-92-740	5th Electric	Capital Improvement Fund	22,000	37,000	**11,184**	X
G - Heritage Center/Festival Hall	10-92-740	Digital Audio Processor	Capital Improvement Fund	6,000	6,000	**6,000**	X
G - Heritage Center/Festival Hall	10-92-740	Festival Hall Carpet Rooms 1-6	Capital Improvement Fund	40,000	40,000	**40,000**	
G - Heritage Center/Festival Hall	10-92-740	HVAC Controls	General Fund	-	10,000	**10,000**	X
G - Heritage Center/Festival Hall	10-92-740	LED Lighting	Capital Improvement Fund	25,000	25,000	**10,685**	X
G - Heritage Center/Festival Hall	10-92-740	Short Throw Lense for Projector	Capital Improvement Fund	8,000	8,000	**8,000**	
G - Heritage Center/Festival Hall	10-92-740	Theater LED Lighting Upgrade	Capital Improvement Fund	54,000	54,000	**34,980**	X
G - Heritage Center/Festival Hall	10-92-790	Digital Microphones (18)	RAP Tax	-	23,400	**23,400**	X
G - Heritage Center/Festival Hall	10-92-790	Sound Board	RAP Tax	-	35,000	**35,000**	
Aquatic Center	20-40-700	Facility Cameras	Capital Improvement Fund	35,000	35,000	**35,000**	
Cedar Area Transit Service	22-40-310	Transit Study	Federal Grant	120,000	120,000	**120,000**	
Cedar Area Transit Service	22-40-310	Transit Study	State Grant	30,000	30,000	**30,000**	
Cedar Area Transit Service	22-40-741	Bus	State Grant	76,000	76,000	**76,000**	X
Cedar Area Transit Service	22-40-741	Bus	Capital Improvement Fund	19,000	19,000	**19,000**	X
Cedar Area Transit Service	22-40-741	Bus	State Grant	68,000	68,000	**68,000**	X
Cedar Area Transit Service	22-40-741	Bus	Capital Improvement Fund	17,000	17,000	**17,000**	X
Cedar Area Transit Service	22-40-741	Bus C-7 Replacement	State Grant	82,400	82,400	**82,400**	
Cedar Area Transit Service	22-40-741	Bus C-7 Replacement	Capital Improvement Fund	20,600	20,600	**20,600**	
Airport	24-40-740	ARF Truck Change Order	Airport Fund	-	35,000	**35,000**	
Transportation Impact Fees	25-40-310	Traffic Access Management Plan	Transportation Impact Fees	10,000	10,000	**10,000**	X
Transportation Impact Fees	25-40-310	Traffic Study at Intersection of 600 South & 860 West	Transportation Impact Fees	10,000	10,000	**10,000**	X
Transportation Impact Fees	25-40-310	Traffic Study at Intersection of Bulldog Road & Kitty Hawk	Transportation Impact Fees	8,000	8,000	**8,000**	X
Transportation Impact Fees	25-40-310	Traffic Study at Intersection of Lund Highway & 1600 North	Transportation Impact Fees	10,000	10,000	**10,000**	X
Transportation Impact Fees	25-40-730	Bulldog Road Widening for Acceleration/Deceleration Lanes	Transportation Impact Fees	165,000	165,000	**165,000**	X
Transportation Impact Fees	25-40-730	Free Right Merge Kitty Hawk From Bulldog Road	Transportation Impact Fees	80,000	110,000	**110,000**	X
Transportation Impact Fees	25-40-730	Industrial Road Parkway	Transportation Impact Fees	500,000	500,000	**500,000**	
Transportation Impact Fees	25-40-730	Master Planned Road Acquisition and Development	Transportation Impact Fees	1,000,000	1,000,000	**985,500**	X
Transportation Impact Fees	25-40-730	Street Widening for New Developments	Transportation Impact Fees	500,000	608,700	**608,700**	
Parks & Rec Impact Fees	26-40-310	Park Design (Fiddlers & Armbrust)	Parks & Rec Impact Fees	75,000	75,000	**75,000**	X
Parks & Rec Impact Fees	26-40-730	Developer Improved Trails	Parks & Rec Impact Fees	218,163	218,163	**164,058**	X
Parks & Rec Impact Fees	26-40-735	Iron West Recreation Property	Parks & Rec Impact Fees	500,000	660,000	**654,800**	X
Parks & Rec Impact Fees	26-40-736	Cross Hollow Recreation Property (Armbrust)	Parks & Rec Impact Fees	500,000	340,000	**340,000**	X
Parks & Rec Impact Fees	26-40-737	Fiddlers Canyon Park	Parks & Rec Impact Fees	500,000	500,000	**498,550**	X
Parks & Rec Impact Fees	26-40-739	Cross Hollow / Old Sorrel Trail	Parks & Rec Impact Fees	488,000	838,000	**347,001**	X
Parks & Rec Impact Fees	26-40-739	Cross Hollows Extension	Parks & Rec Impact Fees	54,459	54,459	**29,929**	X
Parks & Rec Impact Fees	26-40-739	Fiddlers Canyon Trail	Parks & Rec Impact Fees	379,344	654,344	**397,270**	X
Parks & Rec Impact Fees	26-40-739	Industrial Road / Railroad	Parks & Rec Impact Fees	204,304	904,304	**869,359**	X
Golf Course Fund	28-40-730	#12 Tee Box Relocation	Golf Course Fund	15,000	15,000	**15,000**	X
Golf Course Fund	28-40-730	Bunker Renovation	Golf Course Fund	15,000	15,000	**15,000**	
Golf Course Fund	28-40-740	Greens Aerifier	Golf Course Fund	34,500	34,500	**34,500**	X
Golf Course Fund	28-40-740	Heavy Utility Vehicle	Golf Course Fund	38,000	38,000	**38,000**	X
Golf Course Fund	28-40-740	Light Utility Vehicle	Golf Course Fund	27,400	27,400	**27,400**	
Golf Course Fund	28-40-740	Tee Mower	Golf Course Fund	51,000	51,000	**51,000**	
Golf Course Fund	28-40-790	Maintenance Shop Roof	RAP Tax	-	7,000	**7,000**	
Golf Course Fund	28-40-790	P.A. System	RAP Tax	-	14,000	**14,000**	
RAP Tax Fund	29-40-300	Rotary Club Project	RAP Tax	50,000	593,000	**543,000**	X
TRT Tax Fund	30-40-740	Remodel Old Animal Shelter Building for Events Storage	TRT Fund	25,000	25,000	**25,000**	
TRT Tax Fund	30-40-740	Stage for Downtown Lighting Event	TRT Fund	20,000	20,000	**20,000**	
Coal Creek Flood Control	40-41-740	Coal Creek Channel Repairs	Federal Grant	-	477,566	**420,253**	X
Aquatic Construction	41-40-720	Recreation Center Gymnasium	Capital Improvement Fund	280,000	280,000	**62,544**	X
Aquatic Construction	41-40-790	EZ Deck Slide, Paddleboards, Paddles, Kayaks	RAP Tax	80,000	80,000	**39,065**	X
Aquatic Construction	41-40-790	Playground & Childcare Facility	RAP Tax	320,000	96,000	**96,000**	X

Fund	Account	Project	Funding Source	*Original Budget*	*Revised Budget*	*FY24 Total Budget*	*Prior Year Roll-Forward*
Airport Construction	43-40-310	Master Plan: AIP-45	FAA Grant / PFC		615,659	**446,631**	
Airport Construction	43-40-720	FAA Entitlement	FAA Grant / PFC	1,052,632	1,052,632	**1,052,632**	
Airport Construction	43-40-720	FAA Entitlement	Airport Fund PFC	52,632		**-**	
Airport Construction	43-40-721	Terminal Hold Room Expansion	CRRSAA Grant	600,000	600,000	**595,200**	
Airport Construction	43-40-723	Fence Relocation: AIP-47	FAA Grant / PFC		200,000	**200,000**	
Airport Construction	43-40-726	Taxiway C North to Runway: AIP-46	FAA Grant / PFC		1,000,000	**999,297**	
Airport Construction	43-40-731	Pavement Maintenance: AIP-44	FAA Grant / PFC		288,000	**112,087**	
Airport Construction	43-40-740	ARF Truck: AIP-48	FAA Grant / PFC	-	1,000,000	**961,539**	
Water Fund	51-40-700	Cathodic Protection South Line	Water Fund	100,000	206,306	**192,766**	X
Water Fund	51-40-700	North Water Basin Exploration	Water Fund	400,000	400,000	**400,000**	
Water Fund	51-40-711	Culinary Well	Water Impact Fees	1,950,000	1,950,000	**1,949,406**	X
Water Fund	51-40-711	Drill Production Well	Water Impact Fees	2,000,000	2,000,000	**2,000,000**	X
Water Fund	51-40-711	Ground Water Exploration Project - Test Well Airport	Water Impact Fees	200,000	200,000	**174,110**	X
Water Fund	51-40-711	Groundwater Exploration Test Wells	Water Impact Fees	1,000,000	1,900,000	**1,466,871**	X
Water Fund	51-40-712	Holt Water Rights Acquisition	Bond Proceeds / Fund	10,000,000	13,477,000	**13,477,000**	
Water Fund	51-40-712	LeBaron Water Rights Acquisition	Bond Proceeds / Fund	8,000,000	12,000,000	**12,000,000**	
Water Fund	51-40-712	Grimm Water Rights Acquisition	Water Acquisition Fees	-	1,925,261	**1,925,261**	
Water Fund	51-40-712	MJB Water Rights Acquisition	Water Acquisition Fees	-	1,855,042	**1,855,042**	
Water Fund	51-40-712	Water Rights Acquisition	Water Acquisition Fees	100,000	100,000	**100,000**	
Water Fund	51-40-712	Water Rights Assessment Phase 2	Water Acquisition Fees	70,000	120,000	**120,000**	X
Water Fund	51-40-720	Enclose Truck Bays	Water Fund	64,000	64,000	**64,000**	X
Water Fund	51-40-722	Cedar Canyon Water Tank	Water Fund / Impact Fees	175,000	337,279	**308,906**	X
Water Fund	51-40-722	Water Tank	Water Impact Fees	2,250,000	2,250,000	**2,250,000**	X
Water Fund	51-40-722	800 South Tank Phase 2 Project - Booster Pumps	Water Impact Fees	900,000	900,000	**900,000**	X
Water Fund	51-40-722	Water Tank Interior Re-Coating	Water Fund	700,000	750,000	**466,905**	X
Water Fund	51-40-731	1700 West Waterline Loop / Replacement	Water Fund	115,000	255,000	**244,067**	X
Water Fund	51-40-731	Amie Avenue Waterline Relocation	Water Fund	28,000	28,000	**28,000**	X
Water Fund	51-40-731	Industrial Road Improvements	Water Fund	330,000	330,000	**330,000**	
Water Fund	51-40-731	Waterline Replacement 450 West	Water Fund	738,000	738,000	**734,757**	X
Water Fund	51-40-731	Waterline Replacement College Ave	Water Fund	300,000	300,000	**300,000**	X
Water Fund	51-40-732	Water Line Upsizing / New Development	Water Impact Fees	1,400,000	1,893,629	**1,893,629**	
Water Fund	51-40-733	Right Hand Canyon Springs Surge Box	Water Fund	20,000	31,000	**23,386**	X
Water Fund	51-40-740	Automatic Control Valves Quichapa Well #5	Water Fund	40,000	40,000	**21,249**	X
Water Fund	51-40-740	Back-Up Generator for Quichapa Wells	Water Fund	372,000	372,000	**372,000**	
Water Fund	51-40-740	Chlorination System for Wells	Water Fund	70,000	70,000	**70,000**	
Water Fund	51-40-740	Replace Power Panel @ Spilsbury Tank Pump Building	Water Fund	20,000	20,000	**20,000**	X
Water Fund	51-40-850	Injection Wells Pilot Program / Pipeline to WWTP - Grant	State Grant	1,300,000	1,300,000	**1,300,000**	
Sewer Collection Fund	52-55-310	Sewer Master Plan	Sewer Collection Impact Fee	120,000	175,000	**97,609**	X
Sewer Collection Fund	52-55-730	Hunter Glenn Outfall Line / Decommission Lift Station	Sewer Collection Fund	800,000	1,500,000	**1,500,000**	X
Sewer Collection Fund	52-55-730	Slip Lining	Sewer Collection Fund	130,000	130,000	**129,916**	X
Sewer Collection Fund	52-55-731	Sewer Line Rehabilitation Projects	Sewer Collection Fund	500,000	537,305	**537,305**	
Sewer Collection Fund	52-55-732	Sewer Line Upsizing	Sewer Collection Impact Fee	200,000	868,835	**819,919**	X
Sewer Collection Fund	52-55-735	Industrial Road Project Sewer	Sewer Collection Fund	50,000	50,000	**50,000**	
Sewer Plant Fund	53-56-730	8-inch Waterline CICWCD Connection	Sewer Plant Fund	352,100	352,100	**332,162**	X
Sewer Plant Fund	53-56-732	Design for Filtration System and Retention Pond	Sewer Plant Fund	1,900,000	1,900,000	**1,900,000**	X
Sewer Plant Fund	53-56-740	Chlorine Tank Scales Retrofit	Sewer Plant Fund	5,200	5,200	**5,200**	
Sewer Plant Fund	53-56-740	Contact Chamber Floating Scum Skimmer Retrofit	Sewer Plant Fund	13,100	13,100	**13,100**	
Sewer Plant Fund	53-56-740	Dewatering Screw Press	Sewer Plant Fund	995,000	995,000	**813,378**	X
Sewer Plant Fund	53-56-740	Emergency Power	Sewer Plant Fund	35,000	35,000	**25,047**	X
Sewer Plant Fund	53-56-740	Skid Loader	Sewer Plant Fund	5,000	5,000	**5,000**	
Sewer Plant Fund	53-56-740	Utility Water Strainer	Sewer Plant Fund	26,400	26,400	**26,400**	
Sewer Plant Fund	53-56-740	VFD Motor Drives (4)	Sewer Plant Fund	52,300	52,300	**52,300**	
Storm Drain Fund	54-40-730	Detention Basin - 600 South / I-15 Property Purchase	Storm Drain Fund	75,000	75,000	**75,000**	
Storm Drain Fund	54-40-730	Interstate Drive Storm Drain	Storm Drain Fund	141,000	185,000	**29,765**	X

Fund	Account	Project	Funding Source	*Original Budget*	*Revised Budget*	*FY24 Total Budget*	*Prior Year Roll-Forward*
Storm Drain Fund	54-40-732	Storm Drain Upsizing	Storm Drain Impact Fees	400,000	950,000	**647,546**	X
Storm Drain Fund	54-40-732	Storm Drain Upsizing - 800 West SUU	Storm Drain Impact Fees	-	200,000	**193,523**	X
Storm Drain Fund	54-40-733	Storm Drain Channel Sunset Canyon Pond to Crescent Hills	Storm Drain Fund	26,000	26,000	**26,000**	
Storm Drain Fund	54-40-735	Industrial Road Parkway Storm Drain	Storm Drain Fund	300,000	300,000	**300,000**	
Storm Drain Fund	54-40-736	Paiute Tribe Storm Drain	Iron County Grant	-	360,000	**360,000**	X
Storm Drain Fund	54-40-736	Storm Drain Paiute Tribe Property	Storm Drain Fund	100,000	100,000	**100,000**	
Solid Waste	55-40-740	Garbage Truck	Solid Waste Fund	325,400	325,400	**325,400**	X
Solid Waste	55-40-740	Garbage Truck	Solid Waste Fund	393,700	393,700	**393,700**	
Solid Waste	55-40-740	Shop Equipment	Solid Waste Fund	30,000	30,000	**22,766**	X
Parking Authority	56-41-262	Security Camera System East Parking Garage	Parking Authority Fund	35,000	35,000	**10,121**	X
Redevelopment Agency Fund	57-40-730	South Main Street Light & Engineering	RDA Fund	40,000	400,000	**363,887**	X
Public Works Facilities	61-40-730	Fleet Building	Capital Improvement Fund	102,066	277,066	**14,174**	X
Public Works Facilities	61-40-730	Fleet Building	Sewer Collection Fund	20,055	220,055	**11,379**	X
Public Works Facilities	61-40-730	Fleet Building	Solid Waste Fund	600,000	793,000	**19,701**	X
Public Works Facilities	61-40-730	Fleet Building	Storm Drain Fund	2,931	152,931	**7,933**	X
Public Works Facilities	61-40-730	Fleet Building	Water Fund	24,129	224,129	**11,585**	X
Public Works Facilities	61-40-730	Parking Lot Pavement	Capital Improvement Fund	18,780	75,120	**66,756**	X
Public Works Facilities	61-40-730	Parking Lot Pavement	CATS Fund	151	604	**537**	X
Public Works Facilities	61-40-730	Parking Lot Pavement	Sewer Collection Fund	3,689	14,756	**13,113**	X
Public Works Facilities	61-40-730	Parking Lot Pavement	Solid Waste Fund	2,400	9,600	**8,531**	X
Public Works Facilities	61-40-730	Parking Lot Pavement	Storm Drain Fund	540	2,160	**1,920**	X
Public Works Facilities	61-40-730	Parking Lot Pavement	Water Fund	4,440	17,760	**15,783**	X
Public Works Facilities	61-40-730	Public Works Building Renovation	Capital Improvement Fund	102,000	204,000	**204,000**	X
Public Works Facilities	61-40-730	Public Works Building Renovation	CATS Fund	3,000	6,000	**6,000**	X
Public Works Facilities	61-40-730	Public Works Building Renovation	Sewer Collection Fund	45,000	90,000	**90,000**	X
Public Works Facilities	61-40-730	Public Works Building Renovation	Solid Waste Fund	24,000	48,000	**48,000**	X
Public Works Facilities	61-40-730	Public Works Building Renovation	Storm Drain Fund	6,000	12,000	**12,000**	X
Public Works Facilities	61-40-730	Public Works Building Renovation	Water Fund	120,000	240,000	**240,000**	X
Public Works Facilities	61-40-740	Pressure Washer Undercarriage	Capital Improvement Fund	17,528	17,528	**17,528**	
Public Works Facilities	61-40-740	Pressure Washer Undercarriage	CATS Fund	141	141	**141**	
Public Works Facilities	61-40-740	Pressure Washer Undercarriage	Sewer Collection Fund	3,443	3,443	**3,443**	
Public Works Facilities	61-40-740	Pressure Washer Undercarriage	Solid Waste Fund	2,240	2,240	**2,240**	
Public Works Facilities	61-40-740	Pressure Washer Undercarriage	Storm Drain Fund	504	504	**504**	
Public Works Facilities	61-40-740	Pressure Washer Undercarriage	Water Fund	4,144	4,144	**4,144**	
Public Works Facilities	61-40-740	Truck - 3/4 Ton	Capital Improvement Fund	31,300	31,300	**31,300**	
Public Works Facilities	61-40-740	Truck - 3/4 Ton	CATS Fund	252	252	**252**	
Public Works Facilities	61-40-740	Truck - 3/4 Ton	Sewer Collection Fund	6,148	6,148	**6,148**	
Public Works Facilities	61-40-740	Truck - 3/4 Ton	Solid Waste Fund	4,000	4,000	**4,000**	
Public Works Facilities	61-40-740	Truck - 3/4 Ton	Storm Drain Fund	900	900	**900**	
Public Works Facilities	61-40-740	Truck - 3/4 Ton	Water Fund	7,400	7,400	**7,400**	
			Total	57,663,189	88,057,036	76,844,651	

CEDAR CITY CORPORATION
BUDGET

ACCT #	DESCRIPTION	ACTUAL FY19/20	ACTUAL FY20/21	ACTUAL FY21/22	ADOPTED FY22/23	ADOPTED FY23/24	Revised FY23/24	$ Change	% Change
	GENERAL FUND								
	GENERAL FUND REVENUE								
1031	TAX REVENUE								
1031100	CURRENT YEAR PROPERTY TAXES	4,375,450	4,745,002	4,827,132	5,096,000	5,096,000	5,096,000	-	0%
1031110	CURRENT YEAR PROPERTY TAXES-BOND	527,900	527,900	507,483	507,483	507,483	507,483	-	0%
1031200	PRIOR YEAR PROPERTY TAXES	229,777	251,595	300,989	269,000	269,000	269,000	-	0%
1031300	SALES & USE TAXES	8,130,767	9,927,182	11,612,238	9,927,000	11,763,858	11,763,858	-	0%
1031310	MUNICIPAL ENERGY SALES TAX	96,199	78,679	123,032	78,000	78,000	78,000	-	0%
1031410	ELECTRIC FRANCHISE TAX	1,743,209	1,838,085	1,919,290	1,838,000	1,838,000	1,838,000	-	0%
1031420	TV FRANCHISE TAX	39,255	10,843	10,237	10,000	10,000	10,000	-	0%
1031430	GAS FRANCHISE TAX	534,853	558,231	644,781	558,000	558,000	558,000	-	0%
1031440	TELECOMMUNICATIONS TAX	263,927	232,020	224,040	232,000	232,000	232,000	-	0%
1031700	FEES-IN-LIEU OF TAXES	422,644	471,952	525,218	471,000	471,000	471,000	-	0%
1031900	INTEREST-DELINQUENT TAXES	10,244	8,413	64,370	8,000	8,000	8,000	-	0%
1031	TOTAL TAXES	16,374,226	18,649,902	20,758,809	18,994,483	20,831,341	20,831,341	0	0%
1032	LICENSE & PERMIT REVENUE								
1032100	BUSINESS LICENSES	209,800	212,246	234,538	200,000	200,000	200,000	-	0%
1032110	ALCOHOL & BEVERAGE PERMITS	10,022	8,799	9,034	7,000	7,000	7,000	-	0%
1032120	RESIDENTIAL RENTAL LICENSES	20,580	22,589	22,253	18,500	18,500	18,500	-	0%
1032210	BUILDING PERMITS	1,279,333	1,707,761	1,865,508	600,000	600,000	600,000	-	0%
1032250	ANIMAL LICENSES	755	1,366	810	2,000	2,000	2,000	-	0%
1032290	BICYCLE LICENSES	-	2	-	-	-	-	-	
1032	TOTAL LICENSES & PERMITS	1,520,490	1,952,763	2,132,144	827,500	827,500	827,500	0	0%
1033	INTERGOVERNMENTAL REVENUE								
1033126	FED GRANT-FEMA FIRE	622,091	-	-	-	-	-	-	
1033132	FED GRANT-DRUG FREE COMMUNITY	25,000	12,500	(24,900)	-	-	-	-	
1033191	FED GRANT-SAFE STREETS	-	-	-	-	52,000	52,000	-	0%
1033410	STATE GRANT-EDC	5,000	-	-	-	-	-	-	
1033421	STATE GRANT-WILDLAND FIRE	9,910	10,000	9,980	-	-	-	-	
1033422	STATE GRANT-HAZMAT	4,000	8,500	16,125	-	-	-	-	
1033424	STATE GRANT-ICAC	-	-	13,232	-	-	-	-	
1033426	STATE GRANT-HIGHWAY SAFETY	15,000	15,000	-	-	-	-	-	
1033427	STATE GRANT-JAG	-	9,000	-	-	-	-	-	
1033430	STATE GRANT-SIDEWALKS	66,381	-	-	-	-	-	-	
1033431	STATE GRANT-STREETS	93,200	18,400	-	-	-	-	-	
1033474	STATE GRANT-DCC LIBRARY GRANT	11,910	9,300	23,016	10,000	10,000	10,000	-	0%
1033476	STATE GRANT-TRAIL	-	-	-	-	341,640	341,640	-	0%
1033494	STATE GRANT-ARPA	-	-	2,057,171	-	-	-	-	
1033495	STATE GRANT-CARES	1,006,261	1,901,834	-	-	-	-	-	
1033496	STATE GRANT-CDBG HOUSING AUTHORITY	300,000	300,000	209,286	-	-	-	-	
1033497	STATE GRANT-CDBG TURN SERVICES	128,968	-	-	-	-	-	-	
1033560	CLASS "C" ROAD ALLOTMENT	1,510,016	1,682,488	1,751,175	1,682,000	1,682,000	1,682,000	-	0%
1033580	STATE LIQUOR FUND ALLOTMENT	44,345	49,923	53,375	56,000	56,000	56,000	-	0%
1033810	IRON COUNTY-ECONOMIC DEVELOPMENT	108,542	54,750	150,000	50,000	50,000	50,000	-	0%
1033812	IRON COUNTY-CEMETERY CARE	500	250	250	250	250	250	-	0%
1033820	IRON COUNTY-FIRE AGREEMENT	845,262	542,061	558,432	500,000	500,000	500,000	-	0%
1033824	IRON SCHOOL DISTRICT-SCHOOL RESOURCE	62,983	265,606	168,046	83,670	83,670	83,670	-	0%
1033870	IRON COUNTY-RECREATION	694,388	64,508	79,200	246,825	187,485	273,647	86,162	46%
1033871	IRON COUNTY-LIBRARY	127,116	137,146	135,813	125,000	125,000	125,000	-	0%
1033920	ENOCH-FIRE AGREEMENT	128,080	157,359	162,069	130,000	130,000	130,000	-	0%
1033921	KANARRAVILLE-FIRE AGREEMENT	16,203	13,128	13,395	10,000	10,000	10,000	-	0%
1033	TOTAL INTERGOVERNMENTAL REVENUE	5,825,155	5,096,169	5,375,665	2,893,745	3,228,045	3,314,207	86,162	4%

CEDAR CITY CORPORATION
BUDGET

ACCT #	DESCRIPTION	ACTUAL FY19/20	ACTUAL FY20/21	ACTUAL FY21/22	ADOPTED FY22/23	ADOPTED FY23/24	Revised FY23/24	$ Change	% Change
1034	CHARGES FOR SERVICES								
1034100	ADMINISTRATIVE CHARGES	764,268	855,070	872,793	1,009,202	1,056,159	1,056,159	-	0%
1034130	ZONING & BOARD OF ADJUSTMENT FEES	2,346	3,687	49,103	1,000	1,000	1,000	-	0%
1034131	SUBDIVISION FILING FEES	59,180	39,805	8,685	1,000	1,000	1,000	-	0%
1034132	SUBDIVISION PLAT CHECKING FEES	29,537	50,769	52,868	-	-	-	-	
1034133	SUBDIVISION INSPECTION FEES	53,983	127,640	184,892	-	-	-	-	
1034150	SALE OF MAPS & PUBLICATIONS	249	919	3,933	1,200	1,200	1,200	-	0%
1034210	POLICE OVERTIME REIMBURSEMENT	6,822	14,956	13,367	-	-	-	-	
1034211	POLICE MISC REIMBURSEMENT	83,525	30,022	69,794	-	-	-	-	
1034212	FALSE ALARM FEES	3,640	1,195	600	1,000	1,000	1,000	-	0%
1034213	POLICE REPORTS & REGISTRATIONS	10,582	10,287	11,864	5,000	5,000	5,000	-	0%
1034214	TRAFFIC SCHOOL FEES	1,955	-	-	4,000	4,000	4,000	-	0%
1034217	ECONOMIC DEVELOPMENT MISC.	2,834	5,385	5,688	-	-	-	-	
1034221	FIRE MISC REIMBURSEMENT	411,390	406,734	309,551	-	-	-	-	
1034250	ANIMAL POUND FEES	38,696	23,022	27,215	29,100	29,100	29,100	-	0%
1034310	ENGINEERING MISC REIMBURSEMENT	6,286	6,150	18,000	-	-	-	-	
1034311	STREET MISC REIMBURSEMENT	44,616	3,837	16,022	-	-	-	-	
1034312	ROAD BREAK FEES	3,134	3,778	1,275	1,000	1,000	1,000	-	0%
1034325	PARKING PERMITS	133	89	60	-	-	-	-	
1034730	PARK & FIELD RESERVATION FEES	21,715	38,463	36,214	20,000	20,000	20,000	-	0%
1034732	BASKETBALL-YOUTH	29,344	28,407	29,679	20,000	20,000	20,000	-	0%
1034734	FLAG FOOTBALL-YOUTH	10,229	14,026	11,741	6,000	6,000	6,000	-	0%
1034735	SOCCER	-	1,700	1,065	-	-	-	-	
1034736	VOLLEYBALL-ADULT	9,806	9,345	13,695	6,500	6,500	6,500	-	0%
1034738	PARKS MISC REIMBURSEMENT	7,234	3,538	4,087	-	-	-	-	
1034739	T-BALL MACHINE PITCH	9,344	24,533	26,844	18,000	18,000	18,000	-	0%
1034741	SOFTBALL-ADULT	18,740	19,698	28,232	17,500	17,500	17,500	-	0%
1034742	VOLLEYBALL-YOUTH	5,466	9,111	8,397	6,500	6,500	6,500	-	0%
1034744	LEISURE SERVICES PROGRAM REVENUE	8,364	2,930	-	10,000	10,000	10,000	-	0%
1034754	CROSS HOLLOW EVENT CENTER USE FEES	44,071	47,771	110,671	35,000	35,000	35,000	-	0%
1034755	HERITAGE CENTER USE FEES	126,544	95,335	149,349	142,000	142,000	142,000	-	0%
1034780	LIBRARY FEES	9,132	10,659	11,032	12,000	12,000	12,000	-	0%
1034810	SALE OF CEMETERY LOTS	60,738	102,449	128,952	30,000	30,000	30,000	-	0%
1034830	INTERMENTS	41,325	51,782	64,035	26,000	26,000	26,000	-	0%
1034	TOTAL CHARGES FOR SERVICES	1,925,228	2,043,093	2,269,702	1,402,002	1,448,959	1,448,959	0	0%
1035	FINES & FORFEITURES								
1035110	COURT FEES & FINES	157,353	154,080	155,334	150,000	150,000	150,000	-	0%
1035120	LIBRARY FINES	11,360	12,817	5,853	11,500	11,500	11,500	-	0%
1035230	RESTITUTION	3,154	2,559	391	2,000	2,000	2,000	-	0%
1035	TOTAL FINES & FORFEITURES	171,868	169,456	161,578	163,500	163,500	163,500	0	0%
1036	MISCELLANEOUS REVENUE								
1036100	INTEREST EARNINGS	127,410	52,040	77,911	50,000	50,000	50,000	-	0%
1036200	RENTS-LA FIESTA & MCO TIRE	11,593	11,359	10,627	13,050	13,050	13,050	-	0%
1036201	RENTS-JETT LAND LEASE	2,400	2,863	2,200	3,855	3,855	3,855	-	0%
1036400	SALE OF FIXED ASSETS	28,048	168,315	53,548	-	-	-	-	
1036401	SALE OF LIBRARY BOOKS	3,710	5,606	6,613	5,800	5,800	5,800	-	0%
1036800	CAPITAL LEASE PROCEEDS	18,168	18,535	19,004	18,000	18,000	18,000	-	0%
1036900	SUNDRY REVENUES	74,828	141,237	21,043	-	-	-	-	
1036910	CASH OVER/SHORT	3,466	1,252	100	-	-	-	-	
1036	TOTAL MISCELLANOUS REVENUE	269,623	401,208	191,046	90,705	90,705	90,705	0	0%

CEDAR CITY CORPORATION
BUDGET

ACCT #	DESCRIPTION	ACTUAL FY19/20	ACTUAL FY20/21	ACTUAL FY21/22	ADOPTED FY22/23	ADOPTED FY23/24	Revised FY23/24	$ Change	% Change
1038	CONTRIBUTIONS & TRANSFERS								
1038103	TRANS FROM CAPITAL IMPROVEMENT	1,096,871	248,512	211,000	3,194,486	2,459,485	4,086,628	1,627,143	66%
1038104	TRANS FROM RAP TAX	255,838	18,349	81,488	-	-	1,721,989	1,721,989	
1038121	TRANS FROM PUBLIC WORKS FACILITIES	20,837	20,255	1,964	17,687	17,687	17,687	-	0%
1038710	PRIVATE GRANTS-ECONOMIC DEV	36,892	6,463	-	-	-	-	-	
1038711	PRIVATE GRANTS-ADMINISTRATION	-	-	2,000	-	-	-	-	
1038720	PRIVATE GRANTS-POLICE	-	1,200	-	-	-	-	-	
1038721	PRIVATE GRANTS-FIRE	1,528	-	4,900	-	-	-	-	
1038722	PRIVATE GRANTS-ANIMAL CONTROL	-	204	205	-	-	-	-	
1038770	PRIVATE GRANTS-PARKS	600	50	3,250	-	-	-	-	
1038771	PRIVATE GRANTS-RECREATION	-	-	7,701	-	-	-	-	
1038773	PRIVATE GRANTS-LIBRARY	128	240	24,171	-	-	-	-	
1038774	PRIVATE GRANTS-CROSS HOLLOWS	100,000	-	200,000	-	-	-	-	
1038900	FUND BALANCE-APPROPRIATED	-	-	-	-	1,014,000	3,178,123	2,164,123	213%
1038	TOTAL CONTRIBUTIONS & TRANSFERS	1,512,693	295,274	536,678	3,212,173	3,491,172	9,004,427	5,513,255	520%
	TOTAL GENERAL FUND REVENUE	27,599,283	28,607,865	31,425,622	27,584,108	30,081,222	35,680,639		

CEDAR CITY CORPORATION
BUDGET

ACCT #	DESCRIPTION	ACTUAL FY19/20	ACTUAL FY20/21	ACTUAL FY21/22	ADOPTED FY22/23	ADOPTED FY23/24	Revised FY23/24	$ Change	% Change
	GENERAL FUND EXPENDITURES								
1041	ADMINISTRATION								
1041110	SALARIES & WAGES-PERM	668,062	731,353	794,611	848,858	906,126	906,126	-	0%
1041111	OVERTIME-PERM	5,681	5,642	17,607	7,500	7,500	7,500	-	0%
1041120	SALARIES & WAGES-TEMP	4,760	4,268	1,573	15,000	15,000	15,000	-	0%
1041123	SOCIAL SECURITY-TEMP	364	956	120	1,148	1,148	1,148	-	0%
1041131	SOCIAL SECURITY-PERM	50,481	55,464	60,755	65,511	69,893	69,893	-	0%
1041132	EMPLOYEE INSURANCE	168,304	148,040	163,344	174,187	179,684	179,684	-	0%
1041133	STATE RETIREMENT	116,824	126,313	138,275	143,394	153,202	153,202	-	0%
1041134	WORKERS COMPENSATION	5,075	5,409	6,386	6,120	5,760	5,760	-	0%
1041135	UNEMPLOYMENT INSURANCE	722	501	1,151	3,097	2,495	2,495	-	0%
1041136	EXECUTIVE PACKAGE	4,800	4,800	4,800	4,800	4,800	4,800	-	0%
1041137	DRUG TESTING	3,005	4,481	3,884	5,515	5,515	5,515	-	0%
1041138	EMPLOYEE HEALTH	2,302	2,557	1,913	4,754	4,754	4,754	-	0%
1041210	SUBSCRIPTIONS & MEMBERSHIPS	21,038	20,925	26,897	22,000	30,000	30,000	-	0%
1041220	PUBLIC NOTICES	5,645	5,058	431	6,000	6,000	6,000	-	0%
1041221	NEWSLETTER	5,107	7,414	7,825	19,000	19,000	19,000	-	0%
1041230	TRAVEL & TRAINING	20,532	9,859	20,876	28,500	28,500	28,500	-	0%
1041240	OFFICE SUPPLIES & EXPENSE	32,112	29,729	26,185	28,320	28,320	28,320	-	0%
1041252	EQUIPMENT MAINTENANCE	4,758	6,003	6,252	13,882	13,882	13,882	-	0%
1041280	TELEPHONE	6,907	7,458	7,490	10,200	10,200	10,200	-	0%
1041281	INTERNET	-	-	-	6,000	6,000	6,000	-	0%
1041310	PROF & TECH SERVICES	21,758	1,918	4,000	26,000	26,000	26,000	-	0%
1041311	PROF SERVICES-AUDITING	16,135	11,999	8,100	15,499	15,499	15,499	-	0%
1041312	COMPUTER & TECH SERVICES	10,530	29,455	32,531	40,468	151,936	151,936	-	0%
1041313	REVERSE 911 SERVICES	12,090	12,453	12,453	12,500	15,000	15,000	-	0%
1041320	BOARDS & COMMISSIONS	2,369	2,246	116	5,800	5,800	5,800	-	0%
1041325	YOUTH CITY COUNCIL	(52)	-	-	5,000	5,000	5,000	-	0%
1041330	ELECTIONS	44,247	-	56,922	50,000	75,000	75,000	-	0%
1041510	INSURANCE & SURETY BOND	46,905	52,666	51,569	52,262	60,205	60,205	-	0%
1041511	LEGAL CLAIMS	-	-	-	1,700	1,700	1,700	-	0%
1041610	SUNDRY	3,837	2,878	4,885	7,000	7,000	7,000	-	0%
1041611	EMPLOYEE RECOGNITION	-	-	626	1,500	1,500	1,500	-	0%
1041612	SALES TAX	196	322	330	300	300	300	-	0%
1041613	EXECUTIVE DISCRETION	18,557	9,960	10,680	30,000	30,000	30,000	-	0%
		1,303,051	1,300,125	1,472,588	1,661,815	1,892,719	1,892,719	0	0.00%
1041740	CAP OUTLAY-EQUIPMENT	41,799	-	-	50,000	-	-		
1041951	STATE GRANT-CDBG HOUSING AUTHORITY	300,000	300,000	-	-	-	-		
1041952	STATE GRANT-HISTORICAL SOCIETY	-	8,852	209,286	-	-	-		
1041953	STATE GRANT-CDBG TURN SERVICES	124,591	-	-	-	-	-		
1041954	STATE GRANT-CARES	-	1,275,511	-	-	-	-		
1041	TOTAL EXPENDITURES	1,769,441	2,884,488	1,681,874	1,711,815	1,892,719	1,892,719		

CEDAR CITY CORPORATION
BUDGET

ACCT #	DESCRIPTION	ACTUAL FY19/20	ACTUAL FY20/21	ACTUAL FY21/22	ADOPTED FY22/23	ADOPTED FY23/24	Revised FY23/24	$ Change	% Change
1042	CITY BUILDING								
1042110	SALARIES & WAGES-PERM	10,648	11,964	13,771	15,185	16,343	16,343	-	0%
1042120	SALARIES & WAGES-TEMP	11,912	19,737	23,157	27,542	30,542	30,542	-	0%
1042123	SOCIAL SECURITY-TEMP	911	881	1,772	2,107	2,337	2,337	-	0%
1042131	SOCIAL SECURITY-PERM	777	878	1,016	1,161	1,250	1,250	-	0%
1042132	EMPLOYEE INSURANCE	3,104	3,110	3,182	2,341	2,416	2,416	-	0%
1042133	STATE RETIREMENT	2,241	2,210	2,544	2,729	2,937	2,937	-	0%
1042134	WORKERS COMPENSATION	254	270	323	180	180	180	-	0%
1042135	UNEMPLOYMENT INSURANCE	167	130	287	171	141	141	-	0%
1042251	GAS & OIL	661	535	955	1,495	1,495	1,495	-	0%
1042252	EQUIPMENT MAINTENANCE	3,558	6,357	39,335	41,000	41,000	41,000	-	0%
1042261	JANITORIAL SUPPLIES	4,625	5,230	5,084	6,000	8,000	8,000	-	0%
1042262	BUILDING & GROUND MAINTENANCE	16,729	18,625	22,649	18,000	20,000	20,000	-	0%
1042263	PARKING ASSESSMENT	2,926	2,844	2,844	4,300	4,300	4,300	-	0%
1042270	UTILITIES	42,473	55,873	42,047	50,000	50,000	50,000	-	0%
1042280	TELEPHONE	860	909	598	700	700	700	-	0%
1042480	SPECIAL DEPARTMENT SUPPLIES	-	188	-	500	500	500	-	0%
1042510	INSURANCE & SURETY BOND	8,732	10,793	12,305	13,052	16,566	16,566	-	0%
1042610	SUNDRY	-	-	-	500	500	500	-	0%
		110,578	140,534	171,869	186,963	199,207	199,207	0	0.00%
1042730	CAP OUTLAY-IMPROVEMENTS	-	-	122,612	298,707	-	120,077		
1042	TOTAL EXPENDITURES	110,578	140,534	294,482	485,670	199,207	319,284		
1044	LEGAL								
1044110	SALARIES & WAGES-PERM	221,934	231,983	262,854	290,454	286,306	286,306	-	0%
1044131	SOCIAL SECURITY-PERM	16,216	17,031	19,386	22,220	21,902	21,902	-	0%
1044132	EMPLOYEE INSURANCE	64,500	64,548	67,938	68,682	70,978	70,978	-	0%
1044133	STATE RETIREMENT	40,991	42,847	48,549	52,195	51,449	51,449	-	0%
1044134	WORKERS COMPENSATION	2,664	3,130	3,570	3,780	3,240	3,240	-	0%
1044135	UNEMPLOYMENT INSURANCE	216	139	369	1,162	859	859	-	0%
1044210	SUBSCRIPTIONS & MEMBERSHIPS	6,021	5,444	7,484	6,000	6,000	6,000	-	0%
1044230	TRAVEL & TRAINING	1,207	598	1,957	3,500	3,500	3,500	-	0%
1044240	OFFICE SUPPLIES & EXPENSE	1,002	1,116	2,467	5,000	5,000	5,000	-	0%
1044252	EQUIPMENT MAINTENANCE	-	-	-	1,500	1,500	1,500	-	0%
1044280	TELEPHONE	1,849	1,664	1,976	1,600	1,600	1,600	-	0%
1044310	PROF & TECH SERVICES	20,000	23,000	24,000	33,000	63,000	63,000	-	0%
1044312	COMPUTER & TECH SERVICES	1,840	1,504	1,677	6,059	6,059	6,059	-	0%
1044611	EMPLOYEE RECOGNITION	-	-	296	450	450	450	-	0%
1044620	WITNESS FEES	1,239	1,613	2,503	5,000	5,000	5,000	-	0%
		379,680	394,618	445,027	500,602	526,843	526,843	0	0.00%
1044	TOTAL EXPENDITURES	379,680	394,618	445,027	500,602	526,843	526,843		

CEDAR CITY CORPORATION
BUDGET

ACCT #	DESCRIPTION	ACTUAL FY19/20	ACTUAL FY20/21	ACTUAL FY21/22	ADOPTED FY22/23	ADOPTED FY23/24	**Revised FY23/24**	**$ Change**	**% Change**
1053	COMMUNITY PROMOTIONS								
1053630	COMMUNITY EVENT PROMOTIONS	2,299	5,572	745	10,000	10,000	10,000	-	0%
1053635	FESTIVAL PROMOTIONS	2,683	5,446	5,677	10,407	20,516	20,516	-	0%
1053645	CITY IMAGE CAMPAIGN	14,535	8,119	6,950	40,000	40,000	40,000	-	0%
1053661	YOUTH VOLUNTEER CENTER	-	-	5,000	5,000	5,000	5,000	-	0%
1053665	CHAMBER CONTRIBUTION	4,000	4,000	4,000	4,000	5,000	5,000	-	0%
1053666	FAMILY SUPPORT CENTER	-	2,500	5,000	10,000	15,000	15,000	-	0%
1053667	CARE & SHARE CONTRIBUTION	6,000	10,000	10,000	10,000	15,000	15,000	-	0%
1053668	CANYON CREEK CONTRIBUTION	10,000	10,000	10,000	10,000	15,000	15,000	-	0%
1053669	CHILDREN'S JUSTICE CONTRIBUTION	10,000	-	10,000	10,000	15,000	15,000	-	0%
1053670	CHRISTMAS LIGHTS	592	-	-	5,000	17,000	17,000	-	0%
1053671	MAIN STREET DECORATION SUPPORT	1,430	-	500	3,000	3,000	3,000	-	0%
1053680	FIREWORKS	16,500	21,388	21,388	21,500	21,500	21,500	-	0%
								0	0.00%
1053	TOTAL EXPENDITURES	68,039	67,025	79,260	138,907	182,016	182,016		
1060	ECONOMIC DEVELOPMENT								
1060110	SALARIES & WAGES-PERM	112,994	117,389	187,949	232,101	249,798	249,798	-	0%
1060111	OVERTIME-PERM	1,115	480	37	1,500	1,500	1,500	-	0%
1060131	SOCIAL SECURITY-PERM	8,301	8,633	13,952	17,870	19,224	19,224	-	0%
1060132	EMPLOYEE INSURANCE	42,784	38,907	54,201	62,799	65,014	65,014	-	0%
1060133	STATE RETIREMENT	20,214	21,770	33,806	40,594	43,668	43,668	-	0%
1060134	WORKERS COMPENSATION	1,269	1,207	1,572	2,880	2,700	2,700	-	0%
1060135	UNEMPLOYMENT INSURANCE	139	85	322	934	754	754	-	0%
1060210	SUBSCRIPTIONS & MEMBERSHIPS	10,176	10,751	47,847	15,750	22,650	22,650	-	0%
1060230	TRAVEL & TRAINING	3,053	2,950	12,418	14,250	14,250	14,250	-	0%
1060240	OFFICE SUPPLY & EXPENSE	5,362	3,478	8,761	6,000	6,000	6,000	-	0%
1060241	WEB SITE MAINTENANCE	11,276	11,724	12,424	16,000	27,000	27,000	-	0%
1060242	GRAPHIC DESIGN	8,147	7,149	2,489	9,000	9,000	9,000	-	0%
1060251	GAS & OIL	788	251	699	2,760	2,760	2,760	-	0%
1060252	EQUIPMENT MAINTENANCE	18	403	200	1,659	1,659	1,659	-	0%
1060253	LEASE & RENT PAYMENTS	-	270	-	900	900	900	-	0%
1060265	BILLBOARD MAINTENANCE	-	270	540	600	600	600	-	0%
1060266	FREEWAY SIGN MAINTENANCE	-	-	-	3,290	3,290	3,290	-	0%
1060270	UTILITIES	1,434	1,739	1,482	4,200	4,200	4,200	-	0%
1060280	TELEPHONE	1,572	1,005	1,596	1,200	1,200	1,200	-	0%
1060312	COMPUTER & TECH SERVICES	1,207	953	1,675	706	706	706	-	0%
1060510	INSURANCE & SURETY BONDS	144	143	154	161	161	161	-	0%
1060611	EMPLOYEE RECOGNITION	19,708	-	246	450	450	450	-	0%
1060614	ECONOMIC INCENTIVE OBLIGATIONS	-	25,037	2,452	25,000	25,000	25,000	-	0%
1060620	COMMUNITY PROMOTION & RECRUITING	26,185	18,771	23,813	22,000	25,000	25,000	-	0%
		275,886	273,366	408,636	482,604	527,484	527,484	0	0.00%
1060740	CAP OUTLAY-EQUIPMENT	-	-	-	-	-	15,000		
1060950	STATE GRANT-MAINSTREET PROGRAM	-	-	6,064	-	-	-		
1060	TOTAL EXPENDITURES	275,886	273,366	414,700	482,604	527,484	542,484		

CEDAR CITY CORPORATION
BUDGET

ACCT #	DESCRIPTION	ACTUAL FY19/20	ACTUAL FY20/21	ACTUAL FY21/22	ADOPTED FY22/23	ADOPTED FY23/24	Revised FY23/24	$ Change	% Change
1070	POLICE DEPARTMENT								
1070110	SALARIES & WAGES-PERM	2,286,164	2,331,527	2,781,438	3,310,917	3,644,132	3,644,132	-	0%
1070111	OVERTIME-PERM	137,875	155,303	184,823	115,000	125,000	125,000	-	0%
1070120	WAGES-PART TIME & GUARD	11,763	18,618	38,767	48,955	53,193	53,193	-	0%
1070123	SOCIAL SECURITY-TEMP	900	1,424	2,977	3,745	4,069	4,069	-	0%
1070131	SOCIAL SECURITY-PERM	182,267	187,906	220,996	262,083	288,339	288,339	-	0%
1070132	EMPLOYEE INSURANCE	771,024	794,963	836,033	996,459	1,048,181	1,048,181	-	0%
1070133	STATE RETIREMENT	648,027	710,393	821,681	1,054,625	1,161,023	1,161,023	-	0%
1070134	WORKERS COMPENSATION	34,382	34,944	43,311	48,960	48,600	48,600	-	0%
1070135	UNEMPLOYMENT INSURANCE	3,255	2,353	6,157	13,900	11,467	11,467	-	0%
1070210	SUBSCRIPTIONS & MEMBERSHIPS	1,902	3,560	4,639	3,895	3,895	3,895	-	0%
1070220	PUBLIC NOTICES	985	582	104	1,425	1,425	1,425	-	0%
1070231	TRAVEL & TRAINING-ADMIN	7,585	11,140	15,394	11,500	11,500	11,500	-	0%
1070232	TRAVEL & TRAINING-DETECTIVES	7,537	11,108	7,994	7,500	7,500	7,500	-	0%
1070233	TRAVEL & TRAINING-PATROL	18,482	18,518	36,354	28,287	28,287	28,287	-	0%
1070234	TRAVEL & TRAINING-TACT TEAM	1,890	1,295	2,416	4,750	4,750	4,750	-	0%
1070235	TRAVEL & TRAINING-K9	1,606	-	3,320	2,000	2,000	2,000	-	0%
1070240	OFFICE SUPPLY & EXPENSE	5,990	4,855	9,629	8,410	8,410	8,410	-	0%
1070241	K9-EQUIPMENT	797	948	2,150	750	750	750	-	0%
1070242	PRINTING	4,519	4,773	4,324	3,800	3,800	3,800	-	0%
1070243	TACT TEAM EQUIPMENT	101	-	3,699	1,500	1,500	1,500	-	0%
1070244	COPY PAPER	608	798	945	1,235	1,235	1,235	-	0%
1070245	IN-HOUSE TRAINING	1,164	985	3,660	2,000	2,000	2,000	-	0%
1070246	COMPUTER SUPPLIES	10,241	12,024	1,836	2,000	2,000	2,000	-	0%
1070251	GAS & OIL	83,047	86,892	146,538	174,800	174,800	174,800	-	0%
1070252	EQUIPMENT MAINTENANCE	27,740	36,739	41,211	25,000	25,000	25,000	-	0%
1070253	MAINTENANCE-TIRES	11,003	8,175	18,008	11,000	11,000	11,000	-	0%
1070254	MAINTENANCE-RADARS	-	1,534	2,070	2,100	2,100	2,100	-	0%
1070255	MAINTENANCE-RADIOS	4,404	330	60	14,268	14,268	14,268	-	0%
1070280	TELEPHONE	26,083	27,659	31,596	19,920	19,920	19,920	-	0%
1070310	PROF & TECH SERVICES	6,653	22,438	22,652	17,500	37,650	37,650	-	0%
1070311	DISPATCH SERVICE	208,992	240,192	169,686	285,360	299,628	299,628	-	0%
1070312	COMPUTER & TECH SERVICE CONTRACTS	89,871	117,452	119,443	121,091	141,091	141,091	-	0%
1070420	WEED ABATEMENT	435	404	-	5,000	5,000	5,000	-	0%
1070450	SPECIAL PUBLIC SAFETY SUPPLIES	20,810	13,936	18,866	20,000	20,000	20,000	-	0%
1070451	UNIFORM MAINTENANCE	12,440	6,465	5,781	10,000	10,000	10,000	-	0%
1070452	FIREARM SUPPLIES	24,797	8,286	18,832	19,000	19,000	19,000	-	0%
1070453	TRAFFIC SUPPLIES	100	1,130	1,421	1,330	1,330	1,330	-	0%
1070457	MAJOR INVESTIGATION SUPPLIES	347	208	210	950	950	950	-	0%
1070458	SMALL TOOLS	8,092	7,780	4,080	4,327	4,327	4,327	-	0%
1070459	MEDIA SUPPLIES	537	768	1,350	1,425	1,425	1,425	-	0%
1070510	INSURANCE & SURETY BOND	15,244	19,680	13,218	13,494	13,494	13,494	-	0%
1070511	LEGAL CLAIMS	28,975	11,003	38,432	11,372	11,372	11,372	-	0%
1070610	SUNDRY	68	-	-	190	190	190	-	0%
1070611	EMPLOYEE RECOGNITION	1,525	10,866	13,843	10,200	10,200	10,200	-	0%
1070612	BIKE PATROL MAINTENANCE	165	1,600	2,739	1,900	3,400	3,400	-	0%
1070613	CONFIDENTIAL INFORMANT FEES	300	-	-	475	475	475	-	0%
1070620	UNIFORM PURCHASE	18,812	21,465	30,370	20,000	20,000	20,000	-	0%
1070621	BIKE UNIFORMS	112	601	607	855	855	855	-	0%
1070622	PATCHES & BADGES	2,319	3,268	2,822	2,125	2,125	2,125	-	0%
1070624	BALLISTIC VESTS	17,508	14,040	13,123	14,347	14,347	14,347	-	0%
1070625	CROSSING GUARD SUPPLIES	67	1,176	-	735	735	735	-	0%
1070640	LIQUOR ENFORCEMENT	50,000	44,042	77,892	50,000	50,000	50,000	-	0%
1070641	D.A.R.E. AMERICA PROGRAM	6,430	6,032	6,147	6,000	10,000	10,000	-	0%
		4,805,939	5,022,179	5,833,643	6,798,460	7,387,738	7,387,738	0	0.00%
1070700	CAP OUTLAY-NON-CAPITAL ASSETS	-	-	-	-	110,000	110,000		
1070740	CAP OUTLAY-EQUIPMENT	37,244	53,256	63,049	121,200	51,000	51,000		
1070741	CAP OUTLAY-VEHICLES	250,074	661,532	373,623	291,261	300,000	366,000		
1070945	FED GRANT-DRUG FREE COMMUNITY	412	-	12,188	-	-	-		
1070	TOTAL EXPENDITURES	5,093,670	5,736,967	6,282,503	7,210,921	7,848,738	7,914,738		

CEDAR CITY CORPORATION
BUDGET

ACCT #	DESCRIPTION	ACTUAL FY19/20	ACTUAL FY20/21	ACTUAL FY21/22	ADOPTED FY22/23	ADOPTED FY23/24	Revised FY23/24	$ Change	% Change
1073	FIRE DEPARTMENT								
1073110	SALARIES & WAGES-PERM	628,202	661,292	790,100	846,641	912,900	912,900	-	0%
1073111	OVERTIME-PERM	44,024	48,054	61,384	55,260	55,260	55,260	-	0%
1073120	SALARIES & WAGES-TEMP	229,774	252,677	264,891	458,090	458,090	458,090	-	0%
1073121	OVERTIME-TEMP	1,386	774	127	-	-	-	-	
1073123	SOCIAL SECURITY-TEMP	17,774	19,356	20,483	35,044	35,044	35,044	-	0%
1073131	SOCIAL SECURITY-PERM	53,219	55,761	65,571	68,995	74,064	74,064	-	0%
1073132	EMPLOYEE INSURANCE	177,786	178,715	214,239	221,869	222,585	222,585	-	0%
1073133	STATE RETIREMENT	112,923	121,758	145,550	166,385	178,603	178,603	-	0%
1073134	WORKERS COMPENSATION	14,083	15,138	18,779	20,880	23,580	23,580	-	0%
1073135	UNEMPLOYMENT INSURANCE	1,411	864	2,239	5,440	4,279	4,279	-	0%
1073138	EMPLOYEE HEALTH	545	4,809	1,048	3,000	3,000	3,000	-	0%
1073210	SUBSCRIPTIONS & MEMBERSHIPS	4,790	6,530	5,876	4,900	12,150	12,150	-	0%
1073220	PUBLIC NOTICES	27	208	974	200	200	200	-	0%
1073230	TRAVEL & TRAINING	31,750	36,008	25,721	22,000	22,000	22,000	-	0%
1073240	OFFICE SUPPLIES & EXPENSE	4,601	3,675	3,728	4,250	4,250	4,250	-	0%
1073251	GAS & OIL	26,707	25,736	40,427	34,000	34,000	34,000	-	0%
1073252	EQUIPMENT MAINTENANCE	54,237	38,826	50,099	33,720	33,720	33,720	-	0%
1073253	LEASE & RENT PAYMENTS	3,600	3,600	3,600	3,600	3,600	3,600	-	0%
1073261	JANITORIAL SUPPLIES	5,247	5,499	5,008	5,000	5,000	5,000	-	0%
1073262	BUILDING & GROUND MAINTENANCE	28,282	18,031	15,691	15,000	15,000	15,000	-	0%
1073270	UTILITIES	19,842	19,806	19,288	24,000	24,000	24,000	-	0%
1073280	TELEPHONE	8,671	9,203	11,179	8,750	8,750	8,750	-	0%
1073310	PROF & TECH SERVICES	1,850	3,659	2,170	2,800	2,800	2,800	-	0%
1073312	COMPUTER & TECH SERVICES	7,485	6,194	7,237	6,827	6,827	6,827	-	0%
1073450	SPECIAL PUBLIC SAFETY SUPPLIES	75,287	35,091	94,591	22,000	37,000	37,000	-	0%
1073451	UNIFORM ALLOWANCE	21,082	33,759	34,333	32,000	32,000	32,000	-	0%
1073452	PROTECTIVE CLOTHING	32,251	42,084	40,228	37,260	41,360	41,360	-	0%
1073453	VOLUNTEER INSURANCE	11,383	13,723	11,383	15,000	15,000	15,000	-	0%
1073510	INSURANCE & SURETY BONDS	19,158	18,759	19,986	23,949	24,295	24,295	-	0%
1073511	LEGAL CLAIMS	929	3,589	13,884	5,000	90,000	90,000	-	0%
1073610	SUNDRY	-	-	4,705	-	-	-	-	
1073611	EMPLOYEE RECOGNITION	225	482	7,869	9,000	9,000	9,000	-	0%
		1,638,535	1,683,657	2,002,386	2,190,860	2,388,357	2,388,357	0	0.00%
1073710	CAP OUTLAY-LAND	-	-	-	350,000	-	-		
1073720	CAP OUTLAY-BUILDINGS	44,601	8,600	170,033	20,000	558,000	747,730		
1073740	CAP OUTLAY- EQUIPMENT	-	152,925	156,650	175,000	-	-		
1073741	CAP OUTLAY-VEHICLES	63,351	9,081	687,284	200,000	648,600	724,798		
1073940	FED GRANT-FEMA FIRE	704,850	-	-	-	-	-		
1073950	STATE GRANT-WILDLAND	10,281	12,451	13,173	-	-	-		
1073970	PRIVATE GRANTS	1,473	-	4,900	-	-	-		
1073	TOTAL EXPENDITURES	2,463,090	1,866,715	3,034,426	2,935,860	3,594,957	3,860,885		
1075	BUILDING DEPARTMENT								
1075110	SALARIES & WAGES-PERM	191,433	210,206	291,535	328,885	350,994	350,994	-	0%
1075111	OVERTIME-PERM	-	-	-	5,000	5,000	5,000	-	0%
1075120	SALARIES & WAGES-TEMP	-	-	4,500	19,260	19,260	19,260	-	0%
1075123	SOCIAL SECURITY-TEMP	-	-	344	1,473	1,473	1,473	-	0%
1075131	SOCIAL SECURITY-PERM	14,214	15,825	21,955	25,543	27,234	27,234	-	0%
1075132	EMPLOYEE INSURANCE	75,461	70,896	91,901	102,510	111,976	111,976	-	0%
1075133	STATE RETIREMENT	33,770	36,423	51,677	57,099	60,904	60,904	-	0%
1075134	WORKERS COMPENSATION	2,537	2,559	3,055	4,320	4,140	4,140	-	0%
1075135	UNEMPLOYMENT INSURANCE	290	212	573	1,413	1,126	1,126	-	0%
1075210	SUBSCRIPTIONS & MEMBERSHIPS	1,367	1,455	751	2,500	2,500	2,500	-	0%
1075230	TRAVEL & TRAINING	941	3,071	1,738	3,400	3,400	3,400	-	0%
1075240	OFFICE SUPPLIES & EXPENSE	1,878	2,565	4,778	4,600	4,600	4,600	-	0%
1075251	GAS & OIL	3,426	4,035	7,284	5,520	5,520	5,520	-	0%
1075252	EQUIPMENT MAINTENANCE	169	922	1,560	3,276	3,276	3,276	-	0%
1075280	TELEPHONE	3,612	5,495	4,482	2,860	2,860	2,860	-	0%
1075312	COMPUTER & TECH SERVICES	2,413	2,048	2,795	7,912	7,912	7,912	-	0%
1075450	COMPUTER & TECH SERVICE	6,500	6,500	6,500	-	-	-	-	
1075510	INSURANCE & SURETY BONDS	144	143	154	161	161	161	-	0%
1075610	SUNDRY	-	40	235	475	475	475	-	0%
1075612	BUILDING PERMIT SURCHARGE	10,067	13,869	15,133	18,000	18,000	18,000	-	0%
		348,223	376,263	510,950	594,207	630,811	630,811	0	0.00%
1075741	CAP OUTLAY-VEHICLES	-	-	33,405	-	-	-		
1075	TOTAL EXPENDITURES	348,223	376,263	544,355	594,207	630,811	630,811		

CEDAR CITY CORPORATION
BUDGET

ACCT #	DESCRIPTION	ACTUAL FY19/20	ACTUAL FY20/21	ACTUAL FY21/22	ADOPTED FY22/23	ADOPTED FY23/24	Revised FY23/24	$ Change	% Change
1076	ANIMAL CONTROL								
1076110	SALARIES & WAGES-PERM	37,303	32,299	40,157	43,410	46,719	46,719	-	0%
1076111	OVERTIME-PERM	3,074	1,471	2,601	2,750	3,575	3,575	-	0%
1076120	SALARIES & WAGES-TEMP	26,256	27,782	60,742	75,247	107,831	107,831	-	0%
1076123	SOCIAL SECURITY-TEMP	2,009	3,945	4,648	5,756	8,250	8,250	-	0%
1076131	SOCIAL SECURITY-PERM	2,967	680	3,171	3,531	3,848	3,848	-	0%
1076132	EMPLOYEE INSURANCE	13,545	17,869	22,422	22,627	23,457	23,457	-	0%
1076133	STATE RETIREMENT	5,520	5,436	7,133	7,522	8,206	8,206	-	0%
1076134	WORKERS COMPENSATION	888	947	601	720	720	720	-	0%
1076135	UNEMPLOYMENT INSURANCE	127	79	224	486	474	474	-	0%
1076220	PUBLIC NOTICES	479	250	114	1,100	1,100	1,100	-	0%
1076230	TRAVEL & TRAINING	4,659	345	224	3,500	3,500	3,500	-	0%
1076240	OFFICE SUPPLIES & EXPENSE	2,286	1,342	1,326	2,665	2,665	2,665	-	0%
1076251	GAS & OIL	5,809	6,942	8,477	8,625	8,625	8,625	-	0%
1076252	EQUIPMENT MAINTENANCE	223	892	1,568	1,900	1,900	1,900	-	0%
1076253	STERILIZATION	9,046	-	279	1,000	1,000	1,000	-	0%
1076261	JANITORIAL SUPPLIES	4,886	2,740	4,409	6,200	8,200	8,200	-	0%
1076262	BUILDING & GROUND MAINTENANCE	1,203	1,257	6,094	3,700	3,700	3,700	-	0%
1076270	UTILITIES	11,383	13,935	10,945	14,500	14,500	14,500	-	0%
1076280	TELEPHONE	1,017	1,079	2,560	2,300	2,300	2,300	-	0%
1076310	PROF & TECH SERVICES	2,327	711	-	965	965	965	-	0%
1076312	COMPUTER & TECH SERVICES	1,717	1,396	1,864	1,559	1,559	1,559	-	0%
1076450	SPECIAL PUBLIC SAFETY SUPPLIES	14,659	9,548	17,295	11,450	14,500	14,500	-	0%
1076510	INSURANCE & SURETY BONDS	795	840	922	971	1,059	1,059	-	0%
1076620	UNIFORM PURCHASE	672	674	1,298	1,425	1,425	1,425	-	0%
		152,853	132,459	199,071	223,909	270,078	270,078	0	0.00%
1076741	CAP OUTLAY-VEHICLES	-	-	-	66,000	-	-		
1076	TOTAL EXPENDITURES	152,853	132,459	199,071	289,909	270,078	270,078		
1077	PUBLIC WORKS ADMINISTRATION								
1077110	SALARIES & WAGES-PERM	130,206	136,439	154,590	170,763	172,726	172,726	-	0%
1077131	SOCIAL SECURITY-PERM	10,374	10,851	12,365	13,063	13,214	13,214	-	0%
1077132	EMPLOYEE INSURANCE	17,464	17,480	17,591	18,278	18,283	18,283	-	0%
1077133	STATE RETIREMENT	19,490	20,457	23,253	24,832	30,290	30,290	-	0%
1077134	WORKERS COMPENSATION	1,522	1,623	1,762	1,980	1,800	1,800	-	0%
1077135	UNEMPLOYMENT INSURANCE	145	103	247	683	518	518	-	0%
1077210	SUBSCRIPTIONS & MEMBERSHIPS	-	-	-	500	500	500	-	0%
1077230	TRAVEL & TRAINING	672	(26)	365	2,000	2,000	2,000	-	0%
1077240	OFFICE SUPPLIES & EXPENSE	2,386	1,734	1,401	3,000	3,000	3,000	-	0%
1077251	GAS & OIL	114	700	5,501	1,380	1,380	1,380	-	0%
1077252	EQUIPMENT MAINTENANCE	-	1,722	1,587	2,000	2,000	2,000	-	0%
1077280	TELEPHONE	1,797	1,980	2,041	1,000	1,000	1,000	-	0%
1077300	ADMINISTRATION FEE	58,418	101,699	126,404	122,056	122,056	122,056	-	0%
1077312	COMPUTER & TECH SERVICES	1,751	1,450	2,473	2,994	2,994	2,994	-	0%
1077610	SUNDRY	78	134	123	500	500	500	-	0%
1077611	EMPLOYEE RECOGNITION	-	-	610	800	800	800	-	0%
		244,417	296,347	350,314	365,829	373,061	373,061	-	0.00%
1077	TOTAL EXPENDITURES	244,417	296,347	350,314	365,829	373,061	373,061		

CEDAR CITY CORPORATION
BUDGET

ACCT #	DESCRIPTION	ACTUAL FY19/20	ACTUAL FY20/21	ACTUAL FY21/22	ADOPTED FY22/23	ADOPTED FY23/24	Revised FY23/24	$ Change	% Change
1078	FLEET AND WAREHOUSE								
1078110	SALARIES & WAGES-PERM	244,124	252,483	286,406	317,396	341,597	341,597	-	0%
1078111	OVERTIME-PERM	355	297	92	1,000	1,000	1,000	-	0%
1078131	SOCIAL SECURITY-PERM	18,874	19,385	21,855	24,358	26,209	26,209	-	0%
1078132	EMPLOYEE INSURANCE	82,708	82,757	80,167	81,869	76,415	76,415	-	0%
1078133	STATE RETIREMENT	43,141	45,202	51,227	55,341	59,547	59,547	-	0%
1078134	WORKERS COMPENSATION	3,933	4,047	4,636	4,860	4,680	4,680	-	0%
1078135	UNEMPLOYMENT INSURANCE	380	241	548	1,274	1,028	1,028	-	0%
1078210	SUBSCRIPTIONS & MEMBERSHIPS	4,488	2,868	6,113	3,000	6,000	6,000	-	0%
1078230	TRAVEL & TRAINING	440	744	463	2,500	2,500	2,500	-	0%
1078240	OFFICE SUPPLIES & EXPENSE	214	1,739	114	1,500	1,500	1,500	-	0%
1078251	GAS & OIL	1,163	872	1,377	2,530	2,530	2,530	-	0%
1078252	EQUIPMENT MAINTENANCE	779	2,331	1,183	4,288	4,288	4,288	-	0%
1078280	TELEPHONE	2,839	2,922	3,010	2,500	2,500	2,500	-	0%
1078312	COMPUTER & TECH SERVICES	1,517	1,033	2,592	3,206	3,206	3,206	-	0%
1078451	UNIFORMS	2,540	1,363	1,500	2,500	2,500	2,500	-	0%
1078480	SPECIAL DEPARTMENT SUPPLIES	15,195	20,203	20,172	15,000	20,000	20,000	-	0%
1078510	INSURANCE & SURETY BONDS	608	709	775	874	983	983	-	0%
1078610	SUNDRY	476	397	138	500	500	500	-	0%
1078611	EMPLOYEE RECOGNITION	-	-	703	750	750	750	-	0%
		423,773	439,593	483,071	525,246	557,733	557,733	-	0.00%
1078740	CAP OUTLAY-EQUIPMENT	-	-	-	-	9,000	9,000		
1078930	INVENTORY	(1,721)	93,441	(30,188)	-	-	-		
1078	TOTAL EXPENDITURES	422,052	533,034	452,883	525,246	566,733	566,733		
1079	STREETS & HIGHWAYS								
1079110	SALARIES & WAGES-PERM	427,936	469,556	550,177	700,584	667,689	667,689	-	0%
1079111	OVERTIME-PERM	5,634	2,673	4,727	19,000	19,000	19,000	-	0%
1079120	SALARIES & WAGES-TEMP	18,878	15,445	11,620	38,199	38,199	38,199	-	0%
1079121	OVERTIME-TEMP	41	147	228	2,000	2,000	2,000	-	0%
1079123	SOCIAL SECURITY-TEMP	1,447	1,193	906	3,075	3,075	3,075	-	0%
1079131	SOCIAL SECURITY-PERM	33,187	36,257	42,784	55,048	52,532	52,532	-	0%
1079132	EMPLOYEE INSURANCE	154,574	158,532	155,231	201,164	185,682	185,682	-	0%
1079133	STATE RETIREMENT	76,003	82,759	95,667	121,549	116,583	116,583	-	0%
1079134	WORKERS COMPENSATION	8,627	8,749	10,791	13,680	11,880	11,880	-	0%
1079135	UNEMPLOYMENT INSURANCE	766	557	1,200	3,039	2,181	2,181	-	0%
1079230	TRAVEL & TRAINING	173	-	-	6,000	6,000	6,000	-	0%
1079240	OFFICE SUPPLIES & EXPENSE	2,877	563	510	2,100	2,100	2,100	-	0%
1079251	GAS & OIL	111,816	84,506	144,373	166,750	166,750	166,750	-	0%
1079252	EQUIPMENT MAINTENANCE	152,193	105,643	171,751	135,000	145,500	145,500	-	0%
1079253	LEASE & RENT PAYMENTS	8,900	8,900	8,900	10,500	10,500	10,500	-	0%
1079260	MAINTENANCE-STREET LIGHTS	75,771	90,949	145,706	114,005	114,005	114,005	-	0%
1079261	MAINTENANCE-TRAFFIC LIGHTS	-	-	-	-	50,000	50,000	-	0%
1079263	MAINTENANCE-STREETS	157,021	112,562	154,429	168,000	185,000	185,000	-	0%
1079264	MAINTENANCE-SIDEWALKS	105,415	92,372	105,941	150,000	165,000	165,000	-	0%
1079265	MAINTENANCE-RAILROAD	23,321	11,400	32,071	24,000	51,000	51,000	-	0%
1079266	MAINTENANCE-STRIPING	35,403	38,591	49,113	56,000	71,000	71,000	-	0%
1079267	MAINTENANCE-SNOW REMOVAL	39,201	26,486	25,760	45,000	48,000	48,000	-	0%
1079268	MAINTENANCE-CRACK SEALING	60,872	65,668	63,129	74,816	81,000	81,000	-	0%
1079269	MAINTENANCE-CHIP SEALING	1,228,925	1,356,309	1,308,528	1,344,000	1,468,000	1,468,000	-	0%
1079271	UTILITIES-STREET LIGHTING	65,770	62,292	52,755	89,000	89,000	89,000	-	0%
1079272	UTILITIES-RAILROAD ROAD CROSSING	486	580	753	800	800	800	-	0%
1079280	TELEPHONE	2,897	3,026	3,064	2,400	2,400	2,400	-	0%
1079312	COMPUTER & TECH SERVICES	3,524	1,450	3,443	2,494	2,494	2,494	-	0%
1079313	ROAD BREAK REPAIRS	-	-	-	1,200	1,200	1,200	-	0%
1079410	SPECIAL DEPARTMENT SUPPLIES	20,020	18,090	17,674	18,100	18,100	18,100	-	0%
1079420	WEED ABATEMENT	3,216	1,798	7,349	12,000	12,000	12,000	-	0%
1079451	UNIFORM SERVICE	3,709	3,751	4,188	4,800	4,800	4,800	-	0%
1079510	INSURANCE & SURETY BONDS	7,124	7,917	8,544	9,775	10,601	10,601	-	0%
1079511	LEGAL CLAIMS	4,982	2,116	11,090	5,000	5,000	5,000	-	0%
1079610	SUNDRY	663	1,097	912	1,500	1,500	1,500	-	0%
1079611	EMPLOYEE RECOGNITION	-	-	991	1,650	1,650	1,650	-	0%
		2,841,372	2,871,934	3,194,308	3,602,228	3,812,221	3,812,221	0	0.00%
1079730	CAP OUTLAY- IMPROVEMENTS	555,226	26,566	175,908	23,000	-	375,276		
1079732	CAP OUTLAY-SIGNAL LIGHTS	-	-	-	350,000	-	25,184		
1079736	CAP OUTLAY-CODY STREET IMPROVE	-	-	-	-	600,000	600,000		
1079738	CAP OUTLAY-STORMWATER	-	-	459,259	-	-	1,442,846		
1079740	CAP OUTLAY-EQUIPMENT	451,855	14,870	177,000	827,000	-	280,000		
1079741	CAP OUTLAY-VEHICLES	73,520	231,084	1,568	-	304,000	326,000		
1075930	SHOP CHARGES	970	-	129	-	-	-		
1079950	STATE GRANT-SIDEWALKS	86,940	-	-	-	-	-		
1079	TOTAL EXPENDITURES	4,009,882	3,144,454	4,008,171	4,802,228	4,716,221	6,861,527		

CEDAR CITY CORPORATION
BUDGET

ACCT #	DESCRIPTION	ACTUAL FY19/20	ACTUAL FY20/21	ACTUAL FY21/22	ADOPTED FY22/23	ADOPTED FY23/24	Revised FY23/24	$ Change	% Change
1081	CITY ENGINEER								
1081110	SALARIES & WAGES-PERM	485,469	524,853	586,978	648,069	692,910	692,910	-	0%
1081111	OVERTIME-PERM	641	2,767	3,338	3,000	3,000	3,000	-	0%
1081120	SALARIES & WAGES-TEMP	-	-	5,956	10,100	3,000	3,000	-	0%
1081123	SOCIAL SECURITY-TEMP	-	-	456	772	230	230	-	0%
1081131	SOCIAL SECURITY-PERM	35,844	39,560	43,377	49,807	53,237	53,237	-	0%
1081132	EMPLOYEE INSURANCE	143,898	145,208	142,859	153,863	175,128	175,128	-	0%
1081133	STATE RETIREMENT	86,592	92,603	98,429	109,169	116,712	116,712	-	0%
1081134	WORKERS COMPENSATION	6,978	8,300	8,905	9,360	8,820	8,820	-	0%
1081135	UNEMPLOYMENT INSURANCE	517	353	983	2,644	2,097	2,097	-	0%
1081210	SUBSCRIPTIONS & MEMBERSHIPS	690	368	710	1,300	1,300	1,300	-	0%
1081220	PUBLIC NOTICES	726	727	987	1,400	1,400	1,400	-	0%
1081230	TRAVEL & TRAINING	423	2,295	3,757	3,350	3,350	3,350	-	0%
1081240	OFFICE SUPPLIES & EXPENSE	13,371	15,560	19,156	17,400	17,400	17,400	-	0%
1081245	STREET LIGHT CONNECTION	-	-	-	5,000	5,000	5,000	-	0%
1081251	GAS & OIL	2,678	2,333	2,866	7,500	7,500	7,500	-	0%
1081252	EQUIPMENT MAINTENANCE	4,274	9,041	7,788	9,500	9,500	9,500	-	0%
1081280	TELEPHONE	4,212	4,613	4,651	6,000	6,000	6,000	-	0%
1081310	PROF & TECH SERVICES	42,175	178,063	39,982	18,075	115,075	115,075	-	0%
1081312	COMPUTER & TECH SERVICES	4,250	3,510	4,207	4,824	4,824	4,824	-	0%
1081480	SPECIAL DEPARTMENT SUPPLIES	1,715	842	220	1,160	1,160	1,160	-	0%
1081510	INSURANCE & SURETY BONDS	144	143	154	182	182	182	-	0%
1081611	EMPLOYEE RECOGNITION	-	-	1,216	1,500	1,500	1,500	-	0%
		834,596	1,031,138	976,977	1,063,975	1,229,325	1,229,325	0	0
1081740	CAP OUTLAY-EQUIPMENT	-	-	-	-	8,500	8,500		
1081741	CAP OUTLAY-VEHICLES	-	31,191	-	-	-	-		
1081	TOTAL EXPENDITURES	834,596	1,062,329	976,977	1,063,975	1,237,825	1,237,825		
1083	PARKS & CEMETERY								
1083110	SALARIES & WAGES-PERM	335,880	319,829	419,041	466,222	501,771	501,771	-	0%
1083111	OVERTIME-PERM	10,029	10,817	10,294	8,200	8,200	8,200	-	0%
1083120	SALARIES & WAGES-TEMP	219,745	220,960	203,756	264,825	290,000	290,000	-	0%
1083121	OVERTIME-TEMP	8,180	24,022	19,305	4,200	4,200	4,200	-	0%
1083123	SOCIAL SECURITY-TEMP	17,437	18,771	16,625	20,581	22,506	22,506	-	0%
1083131	SOCIAL SECURITY-PERM	26,657	25,349	33,054	36,293	39,013	39,013	-	0%
1083132	EMPLOYEE INSURANCE	115,041	101,627	127,299	136,475	141,189	141,189	-	0%
1083133	STATE RETIREMENT	61,303	57,660	71,886	77,966	83,798	83,798	-	0%
1083134	WORKERS COMPENSATION	5,456	5,669	6,771	7,200	6,840	6,840	-	0%
1083135	UNEMPLOYMENT INSURANCE	1,009	691	1,485	2,974	2,413	2,413	-	0%
1083210	SUBSCRIPTIONS & MEMBERSHIPS	285	-	180	350	350	350	-	0%
1083230	TRAVEL & TRAINING	2,431	76	2,659	2,500	2,500	2,500	-	0%
1083240	OFFICE SUPPLIES & EXPENSE	1,528	1,097	1,019	4,217	4,217	4,217	-	0%
1083251	GAS & OIL	26,610	23,251	37,775	46,805	46,805	46,805	-	0%
1083252	EQUIPMENT MAINTENANCE	48,994	35,760	33,555	32,400	32,400	32,400	-	0%
1083253	LEASE & RENT PAYMENTS	5,249	4,679	-	5,000	5,000	5,000	-	0%
1083261	JANITORIAL SUPPLIES	18,332	21,918	24,775	28,500	28,500	28,500	-	0%
1083262	BUILDING & GROUND MAINTENANCE	85,682	117,382	97,238	100,500	100,500	100,500	-	0%
1083270	UTILITIES	30,141	31,190	33,671	37,000	37,000	37,000	-	0%
1083271	UTILITIES-WATER	48,455	48,455	48,455	48,455	67,830	67,830	-	0%
1083272	UTILITIES-SEWER	17,073	17,073	17,073	17,073	20,300	20,300	-	0%
1083273	UTILITIES-STORM DRAIN	13,592	13,592	13,592	13,592	27,184	27,184	-	0%
1083274	UTILITIES-SOLID WASTE	1,080	1,080	1,080	1,080	1,800	1,800	-	0%
1083280	TELEPHONE	4,341	4,232	4,756	4,500	4,500	4,500	-	0%
1083310	PROF & TECH SERVICES	-	1,425	-	-	-	-	-	
1083312	COMPUTER & TECH SERVICES	4,898	3,641	3,927	2,824	2,824	2,824	-	0%
1083451	UNIFORM SERVICE	3,520	3,601	5,140	3,500	3,500	3,500	-	0%
1083480	SPECIAL DEPARTMENT SUPPLIES	54,199	48,766	32,391	49,160	57,500	57,500	-	0%
1083481	L. PERRY LEGACY EXPENDITURES	-	450	-	450	450	450	-	0%
1083482	URBAN FORESTRY PROGRAM	14,611	20,932	12,295	15,000	15,000	15,000	-	0%
1083510	INSURANCE & SURETY BONDS	3,208	4,468	4,421	4,686	5,861	5,861	-	0%
1083511	LEGAL CLAIMS	19,056	15,240	14,990	9,624	9,624	9,624	-	0%
		1,204,023	1,203,704	1,298,508	1,452,152	1,573,575	1,573,575	0	0.00%
1083710	CAP OUTLAY-LAND	-	-	-	-	-	155,890		
1083720	CAP OUTLAY-BUILDINGS	-	-	-	-	-	-		
1083730	CAP OUTLAY-IMPROVEMENTS	5,646	9,662	-	-	-	-		
1083732	CAP OUTLAY-CEMETERY	67,694	-	13,430	400,000	200,000	650,000		
1083734	CAP OUTLAY-BALL PARK IMPROVEMENTS	107,327	227,593	19,080	392,650	-	247,578		
1083740	CAP OUTLAY-EQUIPMENT	-	134,485	26,178	36,000	42,000	66,800		
1083742	CAP OUTLAY-FIDDLERS CANYON	-	-	-	-	500,000	500,000		
1083790	CAP OUTLAY-RAP TAX	280,076	18,349	68,950	-	-	1,630,589		
1083952	STATE GRANT-TRAIL	-	-	-	-	341,640	341,640		
1083970	PRIVATE GRANTS	15,920	-	-	-	-	-		
1083	TOTAL EXPENDITURES	1,680,687	1,593,792	1,426,147	2,280,802	2,657,215	5,166,072		

CEDAR CITY CORPORATION
BUDGET

ACCT #	DESCRIPTION	ACTUAL FY19/20	ACTUAL FY20/21	ACTUAL FY21/22	ADOPTED FY22/23	ADOPTED FY23/24	Revised FY23/24	$ Change	% Change
1084	RECREATION								
1084110	SALARIES & WAGES-PERM	47,219	48,654	54,778	60,413	50,013	50,013	-	0%
1084111	OVERTIME-PERM	777	475	2,439	100	100	100	-	0%
1084120	SALARIES & WAGES-TEMP	38,889	49,998	57,157	77,297	77,297	77,297	-	0%
1084123	SOCIAL SECURITY-TEMP	2,976	3,813	4,426	5,913	5,913	5,913	-	0%
1084131	SOCIAL SECURITY-PERM	3,557	3,603	3,945	4,629	3,833	3,833	-	0%
1084132	EMPLOYEE INSURANCE	21,368	21,375	22,494	22,712	9,860	9,860	-	0%
1084133	STATE RETIREMENT	8,194	8,365	9,550	9,799	8,115	8,115	-	0%
1084134	WORKERS COMPENSATION	761	811	793	900	720	720	-	0%
1084135	UNEMPLOYMENT INSURANCE	156	124	237	551	382	382	-	0%
1084210	SUBSCRIPTIONS & MEMBERSHIPS	80	-	-	1,000	1,000	1,000	-	0%
1084220	ADVERTISING	2,514	4,570	6,398	5,500	5,500	5,500	-	0%
1084230	TRAVEL & TRAINING	638	(113)	1,072	2,000	2,000	2,000	-	0%
1084240	OFFICE SUPPLIES & EXPENSE	446	1,499	204	500	500	500	-	0%
1084251	GAS & OIL	739	1,816	2,764	3,565	3,565	3,565	-	0%
1084252	EQUIPMENT MAINTENANCE	1,899	2,678	363	2,800	2,800	2,800	-	0%
1084262	BUILDING & GROUND MAINTENANCE	394	946	154	1,000	1,000	1,000	-	0%
1084264	BUILDING RENTAL	21,655	15,895	17,460	27,250	27,250	27,250	-	0%
1084280	TELEPHONE	878	893	746	3,500	3,500	3,500	-	0%
1084310	PROF & TECH SERVICES	-	-	-	-	-	-	-	
1084312	COMPUTER & TECH SERVICES	(168)	535	1,558	353	353	353	-	0%
1084480	SPECIAL DEPARTMENT SUPPLIES	20,893	29,950	38,463	38,940	38,940	38,940	-	0%
1084510	INSURANCE & SURETY BONDS	144	143	154	161	161	161	-	0%
1084511	LEGAL CLAIMS	4,459	125	-	4,500	4,500	4,500	-	0%
1084612	LEISURE SERVICE PROGRAMS	8,429	446	11,032	10,000	10,000	10,000	-	0%
		186,897	196,603	236,187	283,383	257,302	257,302	0	0.00%
1084	TOTAL EXPENDITURES	186,897	196,603	236,187	283,383	257,302	257,302		
1085	LEISURE SERVICES								
1085110	SALARIES & WAGES-PERM	104,479	109,272	124,470	137,228	147,692	147,692	-	0%
1085131	SOCIAL SECURITY-PERM	7,284	7,600	8,750	10,498	11,299	11,299	-	0%
1085132	EMPLOYEE INSURANCE	37,525	37,544	39,441	39,914	41,343	41,343	-	0%
1085133	STATE RETIREMENT	18,116	18,948	21,596	23,130	24,893	24,893	-	0%
1085134	WORKERS COMPENSATION	1,142	1,072	1,277	1,440	1,260	1,260	-	0%
1085135	UNEMPLOYMENT INSURANCE	136	88	214	549	443	443	-	0%
1085210	SUBSCRIPTIONS & MEMBERSHIPS	-	512	-	1,000	1,000	1,000	-	0%
1085220	ADVERTISING	1,047	-	-	1,000	1,000	1,000	-	0%
1085230	TRAVEL & TRAINING	(434)	165	165	2,000	2,000	2,000	-	0%
1085240	OFFICE SUPPLIES & EXPENSE	1,124	1,650	1,711	1,627	1,627	1,627	-	0%
1085251	GAS & OIL	-	-	-	3,000	3,000	3,000	-	0%
1085280	TELEPHONE	364	402	808	2,290	2,290	2,290	-	0%
1085310	PROF & TECH SERVICES	6,600	-	-	-	-	-	-	
1085312	COMPUTER & TECH SERVICES	1,207	1,003	1,118	706	706	706	-	0%
1085510	INSURANCE & SURETY BONDS	1,028	1,236	1,400	1,483	1,839	1,839	-	0%
1085611	EMPLOYEE RECOGNITION	-	-	2,562	2,850	2,850	2,850	-	0%
		179,618	179,490	203,514	228,715	243,242	243,242	0	0.00%
1085	TOTAL EXPENDITURES	179,618	179,490	203,514	228,715	243,242	243,242		

CEDAR CITY CORPORATION
BUDGET

ACCT #	DESCRIPTION	ACTUAL FY19/20	ACTUAL FY20/21	ACTUAL FY21/22	ADOPTED FY22/23	ADOPTED FY23/24	Revised FY23/24	$ Change	% Change
1087	LIBRARY								
1087110	SALARIES & WAGES-PERM	194,294	209,400	240,288	265,917	287,574	287,574	-	0%
1087120	SALARIES & WAGES-TEMP	105,601	125,672	135,791	189,404	208,000	208,000	-	0%
1087123	SOCIAL SECURITY-TEMP	11,020	12,653	13,702	14,489	15,912	15,912	-	0%
1087131	SOCIAL SECURITY-PERM	11,584	12,641	14,743	20,343	22,000	22,000	-	0%
1087132	EMPLOYEE INSURANCE	46,156	45,351	42,617	50,922	52,668	52,668	-	0%
1087133	STATE RETIREMENT	35,202	37,969	43,613	46,963	50,792	50,792	-	0%
1087134	WORKERS COMPENSATION	1,269	1,498	1,616	1,800	1,620	1,620	-	0%
1087135	UNEMPLOYMENT INSURANCE	487	372	731	1,822	1,487	1,487	-	0%
1087210	SUBSCRIPTIONS & MEMBERSHIPS	768	563	803	1,000	1,000	1,000	-	0%
1087220	PUBLIC NOTICES	195	155	47	550	550	550	-	0%
1087230	TRAVEL & TRAINING	(454)	859	1,950	6,000	6,000	6,000	-	0%
1087240	OFFICE SUPPLIES & EXPENSE	12,911	12,603	11,606	17,805	17,805	17,805	-	0%
1087252	EQUIPMENT MAINTENANCE	4,681	3,596	2,693	5,000	6,000	6,000	-	0%
1087261	JANITORIAL SUPPLIES	5,673	5,501	8,392	7,500	9,500	9,500	-	0%
1087262	BUILDING & GROUND MAINTENANCE	17,511	7,510	10,405	18,000	18,000	18,000	-	0%
1087270	UTILITIES	30,134	35,167	33,707	40,000	40,000	40,000	-	0%
1087280	TELEPHONE	310	1,204	1,496	4,500	4,500	4,500	-	0%
1087312	COMPUTER & TECH SERVICE CONTRACTS	30,182	33,069	35,420	36,982	36,982	36,982	-	0%
1087313	GUEST SPEAKER PROGRAM	2,123	1,111	1,713	5,000	5,000	5,000	-	0%
1087480	SPECIAL DEPARTMENT SUPPLIES	1,741	1,492	6,485	3,500	3,500	3,500	-	0%
1087481	BOOKS-GENERAL COLLECTION	31,960	33,375	29,960	40,000	42,000	42,000	-	0%
1087482	BOOKS-YOUNG ADULT	20,204	20,096	17,505	23,000	24,000	24,000	-	0%
1087483	BOOKS-CHILDREN	29,262	30,994	28,682	33,000	35,000	35,000	-	0%
1087485	PERIODICALS	1,658	1,768	2,962	2,000	2,000	2,000	-	0%
1087487	ELECTRONIC SUBSCRIPTIONS	1,404	1,460	1,460	4,000	4,000	4,000	-	0%
1087510	INSURANCE & SURETY BOND	6,680	8,061	9,191	9,749	12,374	12,374	-	0%
1087611	EMPLOYEE RECOGNITION	-	-	308	600	600	600	-	0%
		602,556	644,141	697,884	849,846	908,864	908,864	0	0.00%
1087730	CAP OUTLAY-IMPROVEMENTS	8,686	-	-	-	8,000	8,000		
1087740	CAP OUTLAY-EQUIPMENT	6,000	69,123	9,790	6,200	6,400	6,400		
1087790	CAP OUTLAY-RAP TAX	6,200	-	-	-	-	-		
1087954	STATE GRANT-DCC PUBLIC LIBRARY GRANT	10,000	10,312	35,247	10,000	10,000	10,000		
1087	TOTAL EXPENDITURES	633,442	723,575	751,979	866,046	933,264	933,264		
1090	CROSS HOLLOWS EVENT CENTER								
1090110	SALARIES & WAGES-PERM	54,142	63,394	83,592	75,123	123,189	123,189	-	0%
1090111	OVERTIME-PERM	7,006	5,958	7,859	2,000	2,000	2,000	-	0%
1090120	SALARIES & WAGES-TEMP	32,308	37,064	36,364	37,100	37,100	37,100	-	0%
1090121	OVERTIME-TEMP	3,058	3,112	872	3,000	3,000	3,000	-	0%
1090123	SOCIAL SECURITY-TEMP	2,706	3,228	2,849	3,067	3,067	3,067	-	0%
1090131	SOCIAL SECURITY-PERM	5,017	5,639	6,956	5,900	9,577	9,577	-	0%
1090132	EMPLOYEE INSURANCE	7,093	9,200	23,276	23,419	47,038	47,038	-	0%
1090133	STATE RETIREMENT	11,294	12,809	15,671	13,859	21,742	21,742	-	0%
1090134	WORKERS COMPENSATION	888	947	1,131	1,080	1,620	1,620	-	0%
1090135	UNEMPLOYMENT INSURANCE	145	106	265	468	496	496	-	0%
1090251	GAS & OIL	2,924	3,986	6,699	5,520	5,520	5,520	-	0%
1090252	EQUIPMENT MAINTENANCE	2,728	9,668	6,105	7,000	7,000	7,000	-	0%
1090253	LEASE & RENT PAYMENTS	-	-	-	-	10,260	10,260	-	0%
1090262	BUILDING & GROUND MAINTENANCE	13,094	9,648	22,368	13,000	25,368	25,368	-	0%
1090270	UTILITIES	16,428	12,744	15,327	19,000	19,000	19,000	-	0%
1090280	TELEPHONE	889	1,113	1,248	1,300	1,300	1,300	-	0%
1090312	COMPUTER & TECH SERVICE	603	509	1,303	353	353	353	-	0%
1090480	SPECIAL DEPARTMENT SUPPLIES	5,887	3,730	15,689	15,824	15,824	15,824	-	0%
1090510	INSURANCE & SURETY BONDS	2,227	2,753	3,138	3,329	4,225	4,225	-	0%
		168,438	185,608	250,710	230,342	337,679	337,679	0	0.00%
1090730	CAP OUTLAY-IMPROVEMENTS	99,983	5,204	70,000	-	-	-		
1090740	CAP OUTLAY-EQUIPMENT	-	-	-	173,500	359,970	359,970		
1090790	CAP OUTLAY-RAP TAX FUNDS	-	-	-	-	-	33,000		
1090970	PRIVATE GRANTS	-	66,615	19,611	-	-	314,000		
1090	TOTAL EXPENDITURES	268,420	257,426	340,321	403,842	697,649	1,044,649		

CEDAR CITY CORPORATION
BUDGET

ACCT #	DESCRIPTION	ACTUAL FY19/20	ACTUAL FY20/21	ACTUAL FY21/22	ADOPTED FY22/23	ADOPTED FY23/24	Revised FY23/24	$ Change	% Change
1092	HERITAGE CENTER / FESTIVAL HALL								
1092110	SALARIES & WAGES-PERM	88,715	91,701	103,767	114,649	161,532	161,532	-	0%
1092111	OVERTIME-PERM	1,351	946	1,214	2,000	2,000	2,000	-	0%
1092120	SALARIES & WAGES-TEMP	59,536	54,075	76,693	94,000	122,200	122,200	-	0%
1092121	OVERTIME-TEMP	1,865	1,122	7,271	2,750	2,750	2,750	-	0%
1092123	SOCIAL SECURITY-TEMP	4,697	4,068	6,423	7,402	9,559	9,559	-	0%
1092131	SOCIAL SECURITY-PERM	6,259	6,651	7,197	8,923	12,510	12,510	-	0%
1092132	EMPLOYEE INSURANCE	37,500	37,461	36,111	32,044	56,606	56,606	-	0%
1092133	STATE RETIREMENT	15,938	16,398	18,596	20,125	27,807	27,807	-	0%
1092134	WORKERS COMPENSATION	1,396	1,488	1,600	1,800	2,160	2,160	-	0%
1092135	UNEMPLOYMENT INSURANCE	278	179	398	854	866	866	-	0%
1092220	MARKETING	-	393	390	2,000	2,000	2,000	-	0%
1092230	TRAVEL & TRAINING	1,540	322	-	500	500	500	-	0%
1092240	OFFICE SUPPLIES & EXPENSE	750	821	2,998	4,500	4,500	4,500	-	0%
1092252	EQUIPMENT MAINTENANCE	7,530	10,344	9,918	10,000	10,000	10,000	-	0%
1092261	JANITORIAL SUPPLIES	4,016	4,253	4,046	4,000	4,000	4,000	-	0%
1092262	BUILDING & GROUND MAINTENANCE	38,341	32,033	33,879	37,000	37,000	37,000	-	0%
1092263	PARKING ASSESSMENT	21,238	20,858	20,858	22,000	22,000	22,000	-	0%
1092270	UTILITIES	99,809	99,050	118,599	110,000	110,000	110,000	-	0%
1092280	TELEPHONE	3,457	3,573	3,811	2,000	2,000	2,000	-	0%
1092312	COMPUTER & TECH SERVICES	2,351	2,005	2,236	1,992	1,992	1,992	-	0%
1092480	SPECIAL DEPARTMENT SUPPLIES	6,454	9,889	5,055	8,580	8,580	8,580	-	0%
1092510	INSURANCE & SURETY BONDS	11,312	13,983	15,942	12,800	12,800	12,800	-	0%
1092611	EMPLOYEE RECOGNITION	-	-	-	300	300	300	-	0%
1092613	CONCESSIONS	581	527	534	600	600	600	-	0%
		414,913	412,140	477,537	500,819	614,262	614,262	0	0.00%
1092740	CAP OUTLAY-EQUIPMENT	9,222	-	189,656	75,000	48,000	120,849		
1092790	CAP OUTLAY-RAP TAX FUNDS	-	-	12,537	-	-	58,400		
	TOTAL EXPENDITURES	424,136	412,140	679,730	575,819	662,262	793,511		
1095	TRANSFERS								
1095902	TRANS TO CEDAR AREA TRANSIT SERVICE	85,884	-	50,000	157,543	165,308	165,308	-	0%
1095907	TRANS TO AQUATIC CENTER	447,022	465,912	465,912	602,090	789,274	789,274	-	0%
1095908	TRANS TO GOLF COURSE	136,189	151,657	151,657	172,123	182,341	182,341	-	0%
1095922	TRANS TO MBA-LEASE	127,051	32,744	32,944	65,389	64,589	64,589	-	0%
1095923	TRANS TO DEBT SERVICE	1,413,376	1,414,528	510,733	510,733	510,733	510,733	-	0%
1095924	TRANS TO CAPITAL IMPROVEMENT	3,000,000	4,181,372	4,573,226	329,850	329,850	329,850	-	0%
1095976	TRANS TO TASK FORCE	-	-	-	-	21,500	21,500		
1095	TOTAL TRANSFERS	5,209,522	6,246,213	5,784,472	1,837,728	2,063,595	2,063,595	0	0.00%
	TOTAL GENERAL FUND EXPENDITURES	24,755,128	26,517,837	28,186,393	27,584,108	30,081,222	35,680,639	$ -	
	NET REVENUES OVER EXPENDITURES	2,844,155	2,090,028	3,239,229	-	-	-		

CEDAR CITY CORPORATION
BUDGET

ACCT #	DESCRIPTION	ACTUAL FY19/20	ACTUAL FY20/21	ACTUAL FY21/22	ADOPTED FY22/23	ADOPTED FY23/24	Revised FY23/24	$ Change	% Change
	SPECIAL REVENUE FUNDS								
20	AQUATIC CENTER								
	REVENUES								
2039100	FEES-ADMISSION	235,408	369,231	385,204	350,000	380,000	380,000	-	0%
2039110	FEES-PROGRAM	14,743	6,282	25,087	15,000	15,000	15,000	-	0%
2039111	FEES-WATER SPORTS	5,409	2,039	5,644	5,205	5,205	5,205	-	0%
2039200	SALES-SUPPLIES	12,478	20,474	21,698	22,000	22,000	22,000	-	0%
2039210	SALES-CONCESSIONS	34,899	19,450	84,302	68,000	85,000	85,000	-	0%
2039300	RENTS-ROOMS	19,479	19,326	42,789	25,000	30,000	30,000	-	0%
2039310	RENTS-CONCESSIONAIRE	-	-	339	-	-	-	-	
2039311	ICE RINK	11,361	-	-	-	-	-	-	
2039400	IRON COUNTY SCHOOL DISTRICT	135,000	136,000	131,000	133,000	133,000	133,000	-	0%
2039600	SUNDRY	4,538	-	-	2,500	2,500	2,500	-	0%
2039800	TRANS FROM GENERAL FUND	447,022	465,912	465,912	602,090	789,274	789,274	-	0%
2039801	TRANS FROM CAPITAL IMPROVEMENT	155,995	73,787	29,260	-	35,000	35,000		
2039900	FUND BALANCE-APPROPRIATED	-	-	-	-	-	-		
	TOTAL REVENUES	1,076,332	1,112,501	1,191,237	1,222,795	1,496,979	1,496,979	0	0.00%
	EXPENDITURES								
2040110	SALARIES & WAGES-PERM	82,372	88,551	103,275	108,120	158,702	158,702	-	0%
2040111	OVERTIME-PERM	993	496	685	5,455	5,455	5,455	-	0%
2040120	SALARIES & WAGES-TEMP	342,289	380,218	412,423	478,891	580,891	580,891	-	0%
2040121	OVERTIME-TEMP	711	4,264	2,625	500	500	500	-	0%
2040123	SOCIAL SECURITY-TEMP	26,223	28,906	31,256	36,673	44,476	44,476	-	0%
2040131	SOCIAL SECURITY-PERM	6,249	7,042	8,216	8,688	12,557	12,557	-	0%
2040132	EMPLOYEE INSURANCE	26,338	26,965	27,451	29,746	54,231	54,231	-	0%
2040133	STATE RETIREMENT	14,381	15,501	17,130	20,409	28,745	28,745	-	0%
2040134	WORKERS COMPENSATION	1,269	1,352	1,616	1,620	2,160	2,160	-	0%
2040135	UNEMPLOYMENT INSURANCE	747	616	1,096	2,372	2,236	2,236	-	0%
2040210	SUBSCRIPTIONS & MEMBERSHIPS	-	-	-	1,200	1,200	1,200	-	0%
2040220	PROGRAM MARKETING	10,016	3,697	7,252	10,500	10,500	10,500	-	0%
2040230	TRAVEL & TRAINING	1,416	802	2,575	1,500	1,500	1,500	-	0%
2040240	OFFICE SUPPLIES & EXPENSE	5,051	4,973	6,525	9,127	9,127	9,127	-	0%
2040252	EQUIPMENT MAINTENANCE	44,199	31,756	44,086	12,000	32,000	32,000	-	0%
2040254	CHEMICALS	40,605	61,071	58,824	52,000	55,500	55,500	-	0%
2040261	JANITORIAL SUPPLIES	12,495	19,221	18,149	14,500	14,500	14,500	-	0%
2040262	BUILDING & GROUND MAINTENANCE	59,052	38,078	35,221	40,000	40,000	40,000	-	0%
2040270	UTILITIES	172,343	193,880	236,364	238,100	238,100	238,100	-	0%
2040280	TELEPHONE	5,665	5,162	5,970	3,700	3,700	3,700	-	0%
2040311	AUDIT	832	496	496	496	496	496	-	0%
2040312	COMPUTER & TECH SERVICES	4,438	5,396	3,919	13,883	13,883	13,883	-	0%
2040451	UNIFORMS	3,440	3,009	6,603	5,000	5,000	5,000	-	0%
2040480	SPECIAL DEPARTMENT SUPPLIES	28,152	14,768	15,387	15,360	15,360	15,360	-	0%
2040481	MERCHANDISE	14,628	23,037	21,044	15,000	15,000	15,000	-	0%
2040482	MERCHANDISE-CONCESSIONS	20,372	15,181	58,035	40,000	50,000	50,000	-	0%
2040510	INSURANCE & SURETY BONDS	15,177	17,940	20,411	21,533	26,894	26,894	-	0%
2040511	LEGAL CLAIMS	-	-	-	700	700	700	-	0%
2040610	SUNDRY	1,075	147	1,692	1,500	1,500	1,500	-	0%
2040612	SALES TAX	18,235	19,369	31,487	27,842	30,686	30,686	-	0%
2040613	POOL PROGRAMS	6,475	5,889	10,754	6,380	6,380	6,380	-	0%
		965,239	1,017,781	1,190,566	1,222,795	1,461,979	1,461,979	0	0.00%
2040700	CAP OUTLAY-NON-CAPITAL ASSET	32,295	-	12,756	-	35,000	35,000		
2040730	CAP OUTLAY-IMPROVEMENTS	123,700	-	-	-	-	-		
2040740	CAP OUTLAY-EQUIPMENT	-	73,787	41,124	-	-	-		
	TOTAL EXPENDITURES	1,121,233	1,091,568	1,244,445	1,222,795	1,496,979	1,496,979		
	NET REVENUES OVER EXPENDITURES	(44,902)	20,932	(53,209)	-	-	-		

CEDAR CITY CORPORATION
BUDGET

ACCT #	DESCRIPTION	ACTUAL FY19/20	ACTUAL FY20/21	ACTUAL FY21/22	ADOPTED FY22/23	ADOPTED FY23/24	Revised FY23/24	$ Change	% Change
22	CEDAR AREA TRANSIT SERVICE								
	REVENUES								
2239100	PASSENGER FARES	31,175	32,234	24,574	30,000	30,000	30,000	-	0%
2239340	STATE GRANT-UDOT	287,072	571,624	186,886	157,544	315,300	462,686	147,386	47%
2239400	SUNDRY REVENUES	-	800	1,596	-	-	-	-	
2239800	TRANS FROM GENERAL FUND	85,884	-	50,000	157,543	165,308	165,308	-	0%
2239801	TRANS FROM CAP IMPROVEMENT FUND	-	-	-	19,000	20,600	56,600	36,000	175%
	TOTAL REVENUES	404,131	604,658	263,055	364,087	531,208	714,594		
	EXPENDITURES								
2240111	OVERTIME-PERM	64	-	365	-	-	-	-	
2240120	SALARIES & WAGES-TEMP	109,278	116,750	137,122	175,751	181,023	181,023	-	0%
2240121	OVERTIME-TEMP	-	29	-	-	-	-	-	
2240123	SOCIAL SECURITY-TEMP	8,365	8,934	10,518	13,445	13,848	13,848	-	0%
2240133	STATE RETIREMENT	659	678	6,484	-	-	-	-	
2240135	UNEMPLOYMENT INSURANCE	218	169	331	703	543	543	-	0%
2240210	SUBSCRIPTIONS & MEMBERSHIPS	100	-	-	100	100	100	-	0%
2240220	ADVERTISING	237	-	350	1,000	1,000	1,000	-	0%
2240230	TRAVEL & TRAINING	(32)	65	155	1,000	1,000	1,000	-	0%
2240240	OFFICE SUPPLIES & EXPENSE	572	563	1,886	2,179	2,179	2,179	-	0%
2240251	GAS & OIL	20,018	20,217	32,665	39,100	39,100	39,100	-	0%
2240252	EQUIPMENT MAINTENANCE	8,341	10,712	12,170	13,200	13,200	13,200	-	0%
2240270	UTILITIES	6,749	7,769	9,687	5,600	5,600	5,600	-	0%
2240280	TELEPHONE	182	201	230	400	400	400	-	0%
2240300	ADMINISTRATION FEE	467	812	1,010	1,039	1,101	1,101	-	0%
2240310	PROF & TECH SERVICES	-	-	-	-	150,000	150,000	-	0%
2240311	AUDIT	147	72	72	72	72	72	-	0%
2240312	COMPUTER & TECH SERVICES	651	501	2,033	998	998	998	-	0%
2240480	SPECIAL DEPARTMENT SUPPLIES	495	556	561	1,000	1,000	1,000	-	0%
2240510	INSURANCE & SURETY BONDS	2,758	1,816	3,685	12,000	12,000	12,000	-	0%
2240511	LEGAL CLAIMS	4,256	-	6,566	1,200	1,200	1,200	-	0%
2240610	SUNDRY	133	-	-	300	300	300	-	0%
		163,659	169,843	225,888	269,087	424,664	424,664	0	0.00%
2240741	CAP OUTLAY-VEHICLES	-	9,419	-	95,000	103,000	283,000		
2240900	TRANS TO PUBLIC WORKS FACILITIES	275,065	253,639	-	-	3,544	6,930		
	TOTAL EXPENDITURES	438,724	432,901	225,888	364,087	531,208	714,594		
	NET REVENUES OVER EXPENDITURES	(34,593)	171,757	37,167	-	-	-		

CEDAR CITY CORPORATION
BUDGET

ACCT #	DESCRIPTION	ACTUAL FY19/20	ACTUAL FY20/21	ACTUAL FY21/22	ADOPTED FY22/23	ADOPTED FY23/24	Revised FY23/24	$ Change	% Change
24	AIRPORT								
	REVENUES								
2439100	AERONAUTICAL FUEL TAX	18,232	16,298	18,025	23,000	18,236	18,236	-	0%
2439200	FEES-PASSENGER	60,243	31,292	63,244	51,000	53,940	53,940	-	0%
2439201	FEES-LANDING	99,980	100,884	115,560	100,000	93,000	93,000	-	0%
2439202	FEES-FUEL	80,228	106,756	84,100	90,000	83,000	83,000	-	0%
2439203	FEES-RENTAL CAR CONCESSIONS	49,190	34,161	47,088	40,000	50,043	50,043	-	0%
2439300	RENTS-HANGERS	19,256	17,990	20,880	18,000	19,200	19,200	-	0%
2439301	RENTS-TERMINAL BUILDING	26,332	28,591	27,416	25,000	47,534	47,534	-	0%
2439302	RENTS-LAND	64,015	73,867	42,702	74,000	76,000	76,000	-	0%
2439303	RENTS-FAA BUILDING	53,563	53,748	53,748	53,000	54,000	54,000	-	0%
2439304	RENTS-SNOW CAT GARAGE	9,331	9,331	9,331	10,200	10,200	10,200	-	0%
2439305	RENTS-FED EX BUILDING	4,579	4,929	5,772	5,859	5,859	5,859	-	0%
2439400	IRON COUNTY-AIRPORT	40,195	54,000	30,700	25,000	25,000	25,000	-	0%
2439420	BLM-LEASE IMPROVEMENTS	7,200	22,000	-	-	-	-	-	
2439500	INTEREST EARNINGS	15,304	3,368	7,281	1,800	1,800	1,800	-	0%
2439600	SUNDRY REVENUE	8,157	18,436	13,053	10,200	10,200	10,200	-	0%
2439610	SALE OF FIXED ASSETS	142,937	263,363	66,657	170,000	136,000	136,000	-	0%
2439700	FED GRANT-CARES	-	-	111,230				-	
2439710	STATE GRANT-AIRPORT IMPROVEMENT	-	-	566,133	-	-	-	-	
2439900	FUND BALANCE-APPROPRIATED	-	356,534	-	-	7,117	247,197	240,080	3373%
	TOTAL REVENUE	698,742	1,195,549	1,282,920	697,059	691,129	931,209		
	EXPENDITURES								
2440110	SALARIES & WAGES-PERM	124,685	131,812	150,340	208,939	196,863	196,863	-	0%
2440111	OVERTIME-PERM	-	-	-	900	900	900	-	0%
2440120	SALARIES & WAGES-TEMP	23,003	22,430	43,101	40,211	42,211	42,211	-	0%
2440123	SOCIAL SECURITY-TEMP	1,760	1,716	3,305	3,076	3,229	3,229	-	0%
2440131	SOCIAL SECURITY-PERM	10,610	11,214	12,740	16,053	15,130	15,130	-	0%
2440132	EMPLOYEE INSURANCE	17,193	17,993	19,311	37,029	40,903	40,903	-	0%
2440133	STATE RETIREMENT	21,669	22,635	25,666	34,618	32,711	32,711	-	0%
2440134	WORKERS COMPENSATION	1,396	2,214	2,484	3,240	2,700	2,700	-	0%
2440135	UNEMPLOYMENT INSURANCE	267	153	379	1,001	721	721	-	0%
2440210	SUBSCRIPTIONS & MEMBERSHIPS	479	445	610	800	800	800	-	0%
2440220	ADVERTISING	6,791	8,446	17,859	10,000	10,000	10,000	-	0%
2440230	TRAVEL & TRAINING	2,108	795	3,169	3,500	3,500	3,500	-	0%
2440240	OFFICE SUPPLIES & EXPENSE	1,641	1,130	3,215	2,600	2,600	2,600	-	0%
2440251	GAS & OIL	9,299	6,497	17,965	9,200	9,200	9,200	-	0%
2440252	EQUIPMENT MAINTENANCE	7,002	11,865	13,307	12,000	12,000	12,000	-	0%
2440261	JANITORIAL SUPPLIES	3,046	2,653	3,295	4,000	6,000	6,000	-	0%
2440262	MAINTENANCE-BUILDING & GROUND	30,813	66,686	54,340	50,000	25,000	25,000	-	0%
2440263	MAINTENANCE-ASPHALT	50,537	26,301	53,956	60,000	50,000	50,000	-	0%
2440270	UTILITIES	55,347	57,876	63,736	58,500	58,500	58,500	-	0%
2440280	TELEPHONE	6,042	5,981	6,129	3,280	3,280	3,280	-	0%
2440310	PROF & TECH SERVICES	6,000	10,000	12,367	27,000	65,000	65,000	-	0%
2440311	AUDIT	394	231	231	231	231	231	-	0%
2440312	COMPUTER & TECH SERVICES	1,915	1,504	1,677	2,494	2,494	2,494	-	0%
2440420	WEED ABATEMENT	-	4,682	6,042	6,500	6,500	6,500	-	0%
2440451	UNIFORM SERVICE	897	926	817	1,000	1,000	1,000	-	0%
2440480	SPECIAL DEPARTMENT SUPPLIES	272	1,737	1,822	1,700	1,700	1,700	-	0%
2440510	INSURANCE & SURETY BONDS	25,075	29,890	32,943	28,050	33,567	33,567	-	0%
2440610	SUNDRY	612	471	102	300	300	300	-	0%
2440611	EMPLOYEE RECOGNITION	-	-	350	800	800	800	-	0%
		408,853	448,281	551,258	627,022	627,840	627,840	-	0.00%
2440700	CAP OUTLAY-NON-CAPITAL ASSETS	-	-	10,409	-	-	-		
2440730	CAP OUTLAY-IMPROVEMENTS	70,615	-	-	-	-	-		
2440740	CAP OUTLAY-EQUIPMENT	-	-	-	-	-	35,000		
2440911	TRANS TO AIRPORT CONSTRUCTION FUND	285,090	-	52,632	52,632	63,289	268,369		
2440990	FUND BALANCE-UNAPPROPRIATED	-	-	-	17,405	-	-		
	TOTAL EXPENDITURES	764,559	448,281	614,299	697,059	691,129	931,209		
	NET REVENUES OVER EXPENDITURES	(65,817)	747,268	668,621	-	-	-		

CEDAR CITY CORPORATION
BUDGET

ACCT #	DESCRIPTION	ACTUAL FY19/20	ACTUAL FY20/21	ACTUAL FY21/22	ADOPTED FY22/23	ADOPTED FY23/24	**Revised FY23/24**	**$ Change**	**% Change**
25	TRANSPORTATION IMPACT FEES								
	REVENUES								
2539100	TRANSPORTATION IMPACT FEES	378,955	521,339	813,511	400,000	400,000	400,000		
2539500	INTEREST EARNINGS	42,466	13,806	17,316	10,000	10,000	10,000		
2539900	FUND BALANCE-APPROPRIATED	-	-	-	1,173,000	620,000	1,997,200		
	TOTAL REVENUE	421,421	535,145	830,827	1,583,000	1,030,000	2,407,200		
	EXPENDITURES								
2540310	PROF & TECH SERVICES	2,433	3,577	-	38,000	-	38,000		
2540730	CAP OUTLAY-STREET WIDENING	74,130	75,209	215,716	1,545,000	1,030,000	2,369,200		
	TOTAL EXPENDITURES	76,563	78,786	215,716	1,583,000	1,030,000	2,407,200		
	NET REVENUES OVER EXPENDITURES	344,858	456,360	615,110	-	-	-		
26	PARKS & RECREATION IMPACT FEES								
	REVENUES								
2639100	PARKS & RECREATION IMPACT FEES	530,561	742,168	990,627	400,000	400,000	400,000		
2639500	INTEREST EARNINGS	35,162	11,541	16,415	10,000	10,000	10,000		
2639900	FUND BALANCE-APPROPRIATED	-	-	-	1,440,000	565,000	2,965,968		
	TOTAL REVENUE	565,723	753,708	1,007,042	1,850,000	975,000	3,375,968		
	EXPENDITURES								
2640310	PROF & TECH SERVICES	2,433	3,577	-	-	-	75,000		
2640730	CAP OUTLAY-DEVELOPER IMPROVED TRAILS	-	16,821	21,342	-	-	164,058		
2640735	CAP OUTLAY-BURGESS RECREATION COMPLEX	-	-	-	500,000	-	654,800		
2640736	CAP OUTLAY-ARMBRUST RECREATION	-	-	-	500,000	-	340,000		
2640737	CAP OUTLAY-FIDDLERS CANYON PARK	-	-	-	500,000	-	498,550		
2640739	CAP OUTLAY-TRAIL EXPANSION	306,104	164,261	81,875	350,000	975,000	1,643,560		
	TOTAL EXPENDITURES	308,537	184,659	103,217	1,850,000	975,000	3,375,968		
	NET REVENUES OVER EXPENDITURES	257,186	569,050	903,825	-	-	-		
27	PUBLIC SAFETY IMPACT FEES								
	REVENUES								
2739100	POLICE IMPACT FEES	68,975	94,780	101,389	50,000	50,000	50,000		
2739101	FIRE IMPACT FEES	64,664	84,629	213,059	51,035	51,035	51,035		
2739500	INTEREST EARNINGS-POLICE	660	315	425	-	-	-		
2739501	INTEREST EARNINGS-FIRE	5,089	1,125	1,560	350	400	400		
	TOTAL REVENUES	139,389	180,849	316,434	101,385	101,435	101,435		
	EXPENDITURES								
2740310	PROF & TECH SERVICES	4,866	7,153	-	-	-	-		
2740810	NORTH STATION BOND PAYMENT-IRON CO	5,021	5,021	-	6,000	6,000	6,000		
2740910	TRANS TO MBA FUND	95,385	95,585	95,385	94,695	95,435	95,435		
2740911	TRANS TO DEBT SERVICE FUND	67,665	84,912	-	-	-	-		
2740990	FUND BALANCE-UNAPPROPRIATED	-	-	-	690	-	-		
	TOTAL EXPENDITURES	172,937	192,671	95,385	101,385	101,435	101,435		
	NET REVENUES OVER EXPENDITURES	(33,548)	(11,822)	221,049	-	-	-		

CEDAR CITY CORPORATION
BUDGET

ACCT #	DESCRIPTION	ACTUAL FY19/20	ACTUAL FY20/21	ACTUAL FY21/22	ADOPTED FY22/23	ADOPTED FY23/24	Revised FY23/24	$ Change	% Change
28	GOLF COURSE								
	REVENUE								
2839100	GREEN FEES	448,930	603,804	648,392	550,000	607,000	607,000	-	0%
2839110	DRIVING RANGE FEES	30,225	43,803	48,397	34,718	34,718	34,718	-	0%
2839200	CART RENTALS	204,591	284,116	305,527	210,000	282,000	282,000	-	0%
2839210	RENT-PRO SHOP	3,200	4,800	4,800	3,000	3,000	3,000	-	0%
2839600	SUNDRY REVENUES	-	-	603	500	311	311	-	0%
2839800	TRANS FROM GENERAL	136,189	151,657	151,657	172,123	182,341	182,341	-	0%
2839801	TRANS FROM CAPITAL IMPROVEMENT	1,510,800	13,885	28,766	-	-	-		
2839802	TRANS FROM RAP TAX FUNDS	232,030	-	24,272	-	-	21,000		
2839900	FUND BALANCE-APPROPRIATED	-	-	-	50,000	15,000	102,500		
	TOTAL REVENUES	2,565,965	1,102,065	1,212,414	1,020,341	1,124,370	1,232,870		
	EXPENDITURE								
2840110	SALARIES & WAGES-PERM	234,644	247,998	282,867	310,524	334,202	334,202	-	0%
2840111	OVERTIME-PERM	461	7	606	700	700	700	-	0%
2840120	SALARIES & WAGES-TEMP	121,185	140,096	147,170	147,125	165,000	165,000	-	0%
2840121	OVERTIME-TEMP	400	81	67	200	200	200	-	0%
2840123	SOCIAL SECURITY-TEMP	9,301	10,649	11,177	11,270	12,637	12,637	-	0%
2840131	SOCIAL SECURITY-PERM	17,570	18,433	21,289	23,809	25,620	25,620	-	0%
2840132	EMPLOYEE INSURANCE	87,777	94,096	97,241	100,255	117,703	117,703	-	0%
2840133	STATE RETIREMENT	39,564	43,170	49,289	52,852	56,872	56,872	-	0%
2840134	WORKERS COMPENSATION	3,172	2,654	3,862	4,860	4,680	4,680	-	0%
2840135	UNEMPLOYMENT INSURANCE	653	478	890	1,834	1,501	1,501	-	0%
2840210	SUBSCRIPTIONS & MEMBERSHIPS	1,732	860	4,801	1,500	1,500	1,500	-	0%
2840220	ADVERTISING	3,684	1,630	4,285	4,275	4,275	4,275	-	0%
2840230	TRAVEL & TRAINING	559	850	348	1,800	1,800	1,800	-	0%
2840240	OFFICE SUPPLIES & EXPENSE	3,356	5,848	6,372	4,500	4,500	4,500	-	0%
2840251	GAS & OIL	26,981	24,180	37,768	35,650	35,650	35,650	-	0%
2840252	EQUIPMENT MAINTENANCE	25,147	25,703	40,947	25,000	27,000	27,000	-	0%
2840254	GOLF CART MAINTENANCE	3,241	5,316	5,915	5,000	5,000	5,000	-	0%
2840261	JANITORIAL SUPPLIES	1,656	2,096	2,399	3,000	3,000	3,000	-	0%
2840262	BUILDING & GROUND MAINTENANCE	16,414	41,421	24,627	19,000	19,000	19,000	-	0%
2840263	IRRIGATION SYSTEM MAINTENANCE	19,611	23,461	21,067	17,000	17,000	17,000	-	0%
2840270	UTILITIES	41,743	50,418	41,610	44,000	44,000	44,000	-	0%
2840280	TELEPHONE	4,324	4,588	4,552	4,100	4,100	4,100	-	0%
2840311	AUDIT	682	332	332	332	332	332	-	0%
2840312	COMPUTER & TECH SERVICES	2,808	2,501	2,789	1,412	4,112	4,112	-	0%
2840451	UNIFORM SERVICE	235	169	-	500	500	500	-	0%
2840480	SPECIAL DEPARTMENT SUPPLIES	31,001	31,699	58,370	38,000	42,000	42,000	-	0%
2840481	GOLF CARTS	-	-	36,504	36,000	36,000	36,000	-	0%
2840510	INSURANCE & SURETY BONDS	3,862	4,058	4,583	4,788	5,726	5,726	-	0%
2840610	SUNDRY	-	-	-	475	475	475	-	0%
2840612	SALES TAX	32,414	54,488	58,416	48,080	55,885	55,885	-	0%
		734,175	837,278	970,145	947,841	1,030,970	1,030,970	0	0.00%
2840730	CAP OUTLAY-IMPROVEMENTS	1,582,370	-	11,286	-	15,000	30,000		
2840740	CAP OUTLAY-EQUIPMENT	61,264	13,885	32,870	72,500	78,400	150,900		
2840790	CAP OUTLAY-RAP TAX	232,414	-	24,272	-	-	21,000		
	TOTAL EXPENDITURES	2,610,224	851,163	1,038,573	1,020,341	1,124,370	1,232,870		
	NET REVENUES OVER EXPENDITURES	(44,259)	250,901	173,841	-	-	-		

CEDAR CITY CORPORATION
BUDGET

ACCT #	DESCRIPTION	ACTUAL FY19/20	ACTUAL FY20/21	ACTUAL FY21/22	ADOPTED FY22/23	ADOPTED FY23/24	Revised FY23/24	$ Change	% Change
29	RAP SALES TAX FUND								
	REVENUES								
2939100	SALES TAX-RAP	764,559	946,877	1,132,210	-	-	-		
2939500	INTEREST EARNINGS	39,086	11,456	16,595	-	-	-		
2939900	FUND BALANCE-APPROPRIATED	-	-	-	1,087,000	1,139,000	2,765,721		
	TOTAL REVENUES	803,645	958,332	1,148,805	1,087,000	1,139,000	2,765,721		
	EXPENDITURES								
2940100	DISTRIBUTIONS TO ARTS PROGRAMS	223,725	227,153	258,285	362,334	379,667	344,667		
2940200	DISTRIBUTIONS TO PARKS PROGRAMS	29,000	-	1,600	362,333	379,667	-		
2940300	DISTRIBUTIONS TO RECREATION PROGRAMS	-	-	-	362,333	379,666	543,000		
2940901	TRANS TO AQUATIC CENTER	-	-	-	-	-	135,065		
2940910	TRANS TO GENERAL	255,838	-	81,488	-	-	1,721,989		
2940912	TRANS TO GOLF COURSE	232,030	18,349	24,272	-	-	21,000		
	TOTAL EXPENDITURES	740,593	245,502	365,645	1,087,000	1,139,000	2,765,721		
	NET REVENUES OVER EXPENDITURES	63,052	712,830	783,160	-	-	-		
30	TRT SALES TAX FUND								
	REVENUES								
3039100	SALES TAX-TRT	218,969	295,654	317,219	295,000	340,000	340,000	-	0%
3039200	ENTRY FEES-HALF MARATHON	25,786	48,263	33,226	40,000	40,000	40,000	-	0%
3039201	ENTRY FEES-TOURNAMENT	-	2,275	20,312	-	-	-	-	
3039300	CORPORATE SPONSORSHIPS	4,500	4,674	12,784	-	-	-	-	
3039400	IRON COUNTY-TOURISM	-	-	13,370	-	24,000	24,000	-	0%
3039500	INTEREST EARNINGS	4,046	1,426	1,968	-	-	-	-	
3039900	FUND BALANCE-APPROPRIATED	-	-	-	25,040	113,261	113,261	-	0%
	TOTAL REVENUES	253,300	352,293	398,879	360,040	517,261	517,261		
	EXPENDITURES								
3040100	DISTRIBUTIONS TO PROGRAMS	30,000	30,000	60,000	60,000	60,000	60,000	-	0%
3040110	SALARIES & WAGES-PERM	59,179	56,176	55,492	62,597	72,775	72,775	-	0%
3040120	SALARIES & WAGES-TEMP	-	-	-	-	10,000	10,000		
3040123	SOCIAL SECURITY-TEMP	-	-	-	-	765	765		
3040131	SOCIAL SECURITY-PERM	4,292	4,099	4,364	4,789	5,567	5,567	-	0%
3040132	EMPLOYEE INSURANCE	18,568	21,403	14,759	22,723	23,565	23,565	-	0%
3040133	STATE RETIREMENT	9,202	9,376	9,158	11,249	13,078	13,078	-	0%
3040134	WORKERS COMPENSATION	888	947	954	900	1,080	1,080	-	0%
3040135	UNEMPLOYMENT INSURANCE	102	58	84	250	218	218	-	0%
3040210	SUBSCRIPTIONS & MEMBERSHIPS	848	549	877	1,500	8,165	8,165	-	0%
3040220	ADVERTISING	3,010	10,871	29,669	30,226	56,000	56,000	-	0%
3040221	EVENT SPONSORSHIP	30,566	19,273	75,295	62,500	82,000	82,000	-	0%
3040222	EVENT RECRUITMENT	2,500	9,799	24,532	25,000	25,000	25,000	-	0%
3040223	RUNNERS SERIES	32,929	41,788	52,898	62,000	92,000	92,000	-	0%
3040224	TOURNAMENTS	7,202	-	-	-	-	-	-	
3040230	TRAVEL & TRAINING	2,192	52	6,478	8,000	13,000	13,000	-	0%
3040240	OFFICE SUPPLIES & EXPENSE	443	659	1,425	1,000	1,000	1,000	-	0%
3040251	GAS & OIL	1,185	94	415	2,300	2,300	2,300	-	0%
3040252	EQUIPMENT MAINTENANCE	412	200	539	-	-	-	-	
3040260	COMPUTER & TECH SERVICE	99	-	-	420	420	420	-	0%
3040280	TELEPHONE	182	978	488	850	850	850	-	0%
3040310	PROF & TECH SERVICES	-	-	-	-	-	-	-	
3040312	COMPUTER & TECH SERVICE	960	581	559	420	420	420	-	0%
3040510	INSURANCE & SURETY BONDS	2,444	2,784	3,155	3,316	4,058	4,058	-	0%
		207,202	209,686	341,140	360,040	472,261	472,261	0	0.00%
3040740	CAP OUTLAY-EQUIPMENT	-	-	38,680	-	45,000	45,000		
	TOTAL EXPENDITURES	207,202	209,686	379,820	360,040	517,261	517,261		
	NET REVENUES OVER EXPENDITURES	46,098	142,607	19,059	-	-	-		

CEDAR CITY CORPORATION
BUDGET

ACCT #	DESCRIPTION	ACTUAL FY19/20	ACTUAL FY20/21	ACTUAL FY21/22	ADOPTED FY22/23	ADOPTED FY23/24	Revised FY23/24	$ Change	% Change
	DEBT SERVICE FUND								
31	DEBT SERVICE FUND								
	REVENUES								
3139500	INTEREST EARNINGS	2,713	2,855	355	-	-	-		
3139601	BUILD AMERICA BOND SUBSIDY	140,773	-	-	-	-	-		
3139800	TRANS FROM GENERAL FUND	1,413,376	1,414,528	510,733	510,733	510,733	510,733		
3139801	TRANS FROM PUBLIC SAFETY IMPACT FEES	67,665	84,912	-	-	-	-		
	TOTAL REVENUE	1,624,526	1,502,295	511,088	510,733	510,733	510,733		
	EXPENDITURES								
3140811	PRINCIPAL-LIBRARY GO BOND	115,000	-	-	-	-	-		
3140814	PRINCIPAL-AQUATIC CENTER GO BOND	362,000	441,000	446,000	446,000	446,000	446,000		
3140815	PRINCIPAL-SALES TAX BOND	905,000	935,000	-	-	-	-		
3140821	INTEREST-LIBRARY GO BOND	25,100	-	-	-	-	-		
3140824	INTEREST-AQUATIC CENTER GO BOND	5,084	66,534	61,211	61,483	61,483	61,483		
3140825	INTEREST-SALES TAX BOND	62,138	32,725	-	-	-	-		
3140831	BANK CHARGES-LIBRARY	-	-	-	750	750	750		
3140832	BANK CHARGES-SALES TAX	5,000	-	-	2,500	2,500	2,500		
3140840	BOND CLOSING COSTS	68,471	-	-	-	-	-		
	TOTAL EXPENDITURES	1,547,792	1,475,259	507,211	510,733	510,733	510,733		
	NET REVENUES OVER EXPENDITURES	76,734	27,036	3,877	-	-	-		

CEDAR CITY CORPORATION
BUDGET

ACCT #	DESCRIPTION	ACTUAL FY19/20	ACTUAL FY20/21	ACTUAL FY21/22	ADOPTED FY22/23	ADOPTED FY23/24	**Revised FY23/24**	**$ Change**	**% Change**
	CAPITAL PROJECT FUNDS								
40	COAL CREEK FLOOD CONTROL PROJECT								
	REVENUES								
4038200	STATE GRANT	-	-	53,087	-	-	420,253		
	TOTAL REVENUES	-	-	53,087	-	-	420,253		
	EXPENDITURES								
4041740	CAP OUTLAY-COAL CREEK CHANNEL	-	-	53,087	-	-	420,253		
	TOTAL EXPENDITURES	-	-	53,087	-	-	420,253		
	NET REVENUES OVER EXPENDITURES	-	-	-	-	-	-		
41	AQUATIC CENTER								
	REVENUES								
4139800	TRANS FROM CAPITAL IMPROVEMENT	75,688	141,768	-	-	-	62,544		
4139801	TRANS FROM RAP TAX	-	-	-	-	-	135,065		
	TOTAL REVENUES	75,688	141,768	-	-	-	197,609		
	EXPENDITURES								
4140720	CAP OUTLAY-BUILDINGS	75,687	141,768	-	-	-	62,544		
4140790	CAP OUTLAY-RAP TAX	-	-	-	-	-	135,065		
	TOTAL EXPENDITURES	75,687	141,768	-	-	-	197,609		
	NET REVENUES OVER EXPENDITURES	1	(0)	-	-	-	-		

CEDAR CITY CORPORATION
BUDGET

ACCT #	DESCRIPTION	ACTUAL FY19/20	ACTUAL FY20/21	ACTUAL FY21/22	ADOPTED FY22/23	ADOPTED FY23/24	Revised FY23/24	$ Change	% Change
43	AIRPORT CONSTRUCTION FUND								
	REVENUES								
4339100	FED GRANT-FAA ENTITLEMENT	10,853,547	6,962,670	811,460	1,000,000	1,000,000	4,099,017		
4339106	STATE GRANT-AIRPORT	615,624	42,671	-	-	-	-		
4339800	TRANS FROM AIRPORT FUND	285,090	-	52,632	52,632	52,632	268,369		
	TOTAL REVENUE	11,754,261	7,005,341	864,092	1,052,632	1,052,632	4,367,386		
	EXPENDITURES								
4340310	PROF & TECH SERVICES	-	-	3,400	-	-	446,631		
4340720	CAP OUTLAY-IMPROVEMENTS	-	-	-	1,052,632	1,052,632	1,052,632		
4340721	CAP OUTLAY-AIRPORT TERMINAL	-	-	-	-	-	595,200		
4340723	CAPITAL OUTLAY-FENCE	-	-		-	-	200,000		
4340724	CAP OUTLAY-AP IMP/EDA	-	-	-	-	-	-		
4340726	CAPITAL OUTLAY-TAXIWAY C	-	-	-	-	-	999,297		
4340731	CAP OUTLAY-ACCESS ROAD	-	-	682	-	-	112,087		
4340732	CAP OUTLAY-RUNWAY LIGHTING	11,599,886	5,409,012	2,785	-	-	-		
4340733	CAP OUTLAY-TAXI LANES	8,443	979,401	328,122	-	-	-		
4340740	CAP OUTLAY-EQUIPMENT	-	31,422	529,103	-	-	961,539		
4340820	STATE GRANT-AIRPORT IMPROVE	145,932	585,507	-	-	-	-		
	TOTAL EXPENDITURES	11,754,261	7,005,341	864,092	1,052,632	1,052,632	4,367,386		
	NET REVENUES OVER EXPENDITURES	-	-	-	-	-	-		
44	WESTVIEW DRIVE CAPITAL PROJECT								
	REVENUES								
4439100	CORRIDOR PRESERVATION FUND	209,288	-	-	-	-	-		
	TOTAL REVENUES	209,288	-	-	-	-	-		
	EXPENDITURES								
4440734	CAP OUTLAY-WESTVIEW DRIVE	182,863	26,426	-	-	-	-		
	TOTAL EXPENDITURES	182,863	26,426	-	-	-	-		
	NET REVENUES OVER EXPENDITURES	26,426	(26,426)	-	-	-	-		

CEDAR CITY CORPORATION
BUDGET

ACCT #	DESCRIPTION	ACTUAL FY19/20	ACTUAL FY20/21	ACTUAL FY21/22	ADOPTED FY22/23	ADOPTED FY23/24	**Revised FY23/24**	**$ Change**	**% Change**
46	CAPITAL IMPROVEMENT FUND								
	REVENUES								
4639410	TRANS FROM GENERAL FUND	3,000,000	4,181,372	4,573,226	329,850	329,850	329,850	-	0%
4639430	TRANS FROM STORM DRAIN FUND	26,741	26,507	1,217	25,055	25,055	25,055	-	0%
4639500	INTEREST EARNINGS	240,898	67,104	93,158	-	-	-	-	
4639990	FUND BALANCE-APPROPRIATED	-	-	-	2,983,361	6,929,788	13,019,625	6,089,837	88%
	TOTAL REVENUE	3,267,638	4,274,983	4,667,601	3,338,266	7,284,693	13,374,530		
	EXPENDITURES								
4695920	TRANS TO ANIMAL SHELTER	60,757	-	-	-	-	-	-	
4695923	TRANS TO AQUATIC CENTER	155,995	73,787	29,260	-	35,000	35,000	-	0%
4695924	TRANS TO AQUATIC CENTER CONST	75,688	141,768	-	-	-	62,544		
4695930	TRANS TO GENERAL FUND	1,096,871	248,512	211,000	3,198,486	2,459,485	4,086,628	1,627,143	66%
4695942	TRANS TO CATS	-	-	-	19,000	20,600	56,600	36,000	175%
4695943	TRANS TO GOLF COURSE	1,510,800	13,885	28,766	-	-	-	-	
4695950	TRANS TO WATER	-	-	-	-	4,600,000	8,800,000	4,200,000	91%
4695960	TRANS TO PUBLIC WORKS COMPLEX	142,090	101,201	15,646	120,780	169,608	333,758	164,150	97%
	TOTAL EXPENDITURES	3,042,201	579,153	284,672	3,338,266	7,284,693	13,374,530		
	NET REVENUES OVER EXPENDITURES	225,437	3,695,830	4,382,929	-	-	-		
49	ANIMAL SHELTER PROJECT								
	REVENUES								
4939100	DONATIONS	43,579	3,438	4,250	-	-	-		
4939400	TRANS FROM CAP IMPROVEMENT	60,757	-	-	-	-	-		
	TOTAL REVENUES	104,336	3,438	4,250	-	-	-		
	EXPENDITURES								
4940723	CAP OUTLAY-SITE WORK	60,757	-	-	-	-	-		
	TOTAL EXPENDITURES	60,757	-	-	-	-	-		
	NET REVENUES OVER EXPENDITURES	43,579	3,438	4,250	-	-	-		

CEDAR CITY CORPORATION
BUDGET

ACCT #	DESCRIPTION	ACTUAL FY19/20	ACTUAL FY20/21	ACTUAL FY21/22	ADOPTED FY22/23	ADOPTED FY23/24	Revised FY23/24	$ Change	% Change
	ENTERPRISE FUNDS								
51	WATER FUND								
	REVENUE								
5136200	HYDRANT METER RENTALS	1,888	4,285	5,010	4,000	4,000	4,000	-	0%
5137110	METERED WATER SALES	4,670,494	4,828,817	4,398,783	4,828,000	5,100,000	5,100,000	-	0%
5137115	UNMETERED WATER SALES	48,455	48,455	48,455	48,455	67,830	67,830	-	0%
5137130	IRRIGATION WATER	5,097	3,951	3,936	4,500	4,500	4,500	-	0%
5137160	CONNECTION FEES	137,268	215,982	225,991	215,000	215,000	215,000	-	0%
5137161	IMPACT FEES	743,971	1,170,419	1,429,066	700,000	700,000	700,000	-	0%
5137165	WATER ACQUISITION FEE	515,801	1,036,326	3,093,409	500,000	500,000	500,000	-	0%
5137170	LATE PENALTIES	91,418	97,475	112,585	80,000	80,000	80,000	-	0%
5137191	TAPPING FEES	1,170	720	540	500	500	500	-	0%
5137801	STATE GRANT-BOARD OF WATER RES	-	-	-	-	1,300,000	1,300,000	-	0%
5138100	INTEREST EARNINGS	190,112	61,434	73,871	60,000	60,000	60,000	-	0%
5138110	INTEREST EARNINGS-IMPACT FEES	90,987	26,930	34,503	27,000	27,000	27,000	-	0%
5138301	TRANS FROM PUBLIC WORKS FACILITIES	35,952	34,949	30,518	30,518	30,518	30,518	-	0%
5138302	TRANS FROM CAPITAL IMPROVEMENT	-	-	-	-	4,600,000	8,800,000	4,200,000	91%
5138400	SALE OF FIXED ASSETS	37,850	36,722	-	-	-	-	-	
5138900	SUNDRY	44,731	7,013	19,064	-	-	-	-	
5139600	BOND PROCEEDS	-	-	-	-	-	18,000,000	18,000,000	
5139700	CONTRIBUTIONS-OTHER SOURCES	2,141,625	1,157,435	4,109,776	-	-	-	-	
5139800	FUND BALANCE-APPROPRIATED	-	-	-	3,493,398	-	14,674,432	14,674,432	
	TOTAL REVENUE	8,756,819	8,730,915	13,585,506	9,991,371	12,689,348	49,563,780		
	EXPENSES								
5140110	SALARY & WAGES-PERM	614,530	651,560	792,317	773,360	814,921	814,921	-	0%
5140111	OVERTIME-PERM	26,366	29,560	36,571	30,000	40,000	40,000	-	0%
5140120	SALARY & WAGES-TEMP	15,048	-	-	-	65,000	65,000	-	0%
5140121	OVERTIME-TEMP	107	-	-	-	-	-	-	
5140123	SOCIAL SECURITY-TEMP	1,159	-	-	-	4,973	4,973	-	0%
5140131	SOCIAL SECURITY-PERM	47,799	50,643	57,364	61,457	65,401	65,401	-	0%
5140132	EMPLOYEE INSURANCE	188,396	204,666	223,129	251,723	238,779	238,779	-	0%
5140133	STATE RETIREMENT	136,115	48,472	(10,961)	140,353	148,423	148,423	-	0%
5140134	WORKERS COMPENSATION	11,672	12,581	14,296	14,940	14,400	14,400	-	0%
5140135	UNEMPLOYMENT INSURANCE	917	644	1,559	3,213	2,760	2,760	-	0%
5140210	SUBSCRIPTIONS & MEMBERSHIPS	2,778	2,943	3,534	4,000	4,000	4,000	-	0%
5140220	PUBLIC NOTICES	-	2,576	405	5,000	5,000	5,000	-	0%
5140230	TRAVEL & TRAINING	1,564	3,420	7,053	7,500	9,500	9,500	-	0%
5140240	OFFICE SUPPLIES & EXPENSE	52,849	47,238	37,040	61,000	61,000	61,000	-	0%
5140251	GAS & OIL	32,272	34,972	54,645	70,150	70,150	70,150	-	0%
5140252	EQUIPMENT MAINTENANCE	10,811	7,436	14,943	30,000	30,000	30,000	-	0%
5140253	LEASE & RENT PAYMENTS	7,000	7,411	7,000	13,000	13,000	13,000	-	0%
5140255	MAINTENANCE-WATER SYSTEM	228,251	237,370	397,877	365,000	535,000	535,000	-	0%
5140256	MAINTENANCE-CONCRETE	9,591	1,936	1,303	23,000	23,000	23,000	-	0%
5140257	MAINTENANCE-LAKE AT THE HILLS	1,593	552	200	5,000	5,000	5,000	-	0%
5140262	MAINTENANCE-WELL HOUSES	5,629	4,587	6,401	5,000	6,000	6,000	-	0%
5140270	UTILITIES	592,577	866,911	757,238	850,000	850,000	850,000	-	0%
5140280	TELEPHONE	5,915	7,008	6,913	8,500	8,500	8,500	-	0%
5140300	ADMINISTRATION FEES	265,655	315,792	321,519	320,491	320,491	320,491	-	0%
5140310	PROF & TECH SERVICES	28,183	40,115	100,673	12,000	12,000	12,000	-	0%
5140311	AUDIT	7,435	6,827	7,500	8,327	8,327	8,327	-	0%
5140312	COMPUTER & TECH SERVICES	3,640	2,805	8,086	5,488	5,488	5,488	-	0%
5140315	IRRIGATION EXPENSE	10,573	10,021	10,584	11,000	11,000	11,000	-	0%
5140316	WHOLE SALE WATER PURCHASE	-	627	3,987	20,000	20,000	20,000	-	0%
5140451	UNIFORM SERVICE	2,948	2,199	1,580	4,000	5,000	5,000	-	0%

CEDAR CITY CORPORATION
BUDGET

ACCT #	DESCRIPTION	ACTUAL FY19/20	ACTUAL FY20/21	ACTUAL FY21/22	ADOPTED FY22/23	ADOPTED FY23/24	**Revised FY23/24**	**$ Change**	**% Change**
5140480	SPECIAL DEPARTMENT SUPPLIES	21,740	5,537	10,973	35,000	35,000	35,000	-	0%
5140481	WATER METERS-NEW	436,547	472,561	323,161	500,000	500,000	500,000	-	0%
5140510	INSURANCE & SURETY BOND	15,610	19,963	22,981	19,234	22,704	22,704	-	0%
5140511	LEGAL CLAIMS	1,322	5,000	-	5,100	5,100	5,100	-	0%
5140610	SUNDRY	1,243	472	531	1,000	1,000	1,000	-	0%
5140611	EMPLOYEE RECOGNITION	-	-	2,190	1,950	1,950	1,950	-	0%
5140612	WATER CONSERVATION PROGRAM	-	-	-	54,000	54,000	54,000	-	0%
5140650	DEPRECIATION	1,280,483	1,336,609	1,353,369	-	-	-	-	
		4,068,319	4,441,016	4,575,959	3,719,786	4,016,867	4,016,867	0	0.00%
5140700	CAP OUTLAY-NONCAPITAL ASSETS	-	-	194,828	-	400,000	592,766		
5140711	CAP OUTLAY-WELLS	57,207	7,081	18,080	3,000,000	900,000	5,590,388		
5140712	CAP OUTLAY-WATER RIGHTS	139,019	888,590	55,314	170,000	150,000	29,477,303		
5140720	CAP OUTLAY-BUILDINGS & STRUCTURES	-	-	-	-	-	64,000		
5140722	CAP OUTLAY-CEDAR CANYON TANK	-	6,515	579,620	900,000	150,000	3,925,811		
5140730	CAP OUTLAY-IMPROVEMENTS	194,614	605	-	-	-	-		
5140731	CAP OUTLAY-LINE REPLACEMENT	50	502,271	104,618	1,038,000	330,000	1,636,824		
5140732	CAP OUTLAY-LINE UPSIZING	386,486	188,500	426,448	700,000	1,400,000	1,893,629		
5140733	CAP OUTLAY-RIGHT HAND SPRING LINE	-	-	1,714	-	11,000	23,386		
5140736	CAP OUTLAY-AIRPORT ROAD LINE	-	130,788	96,061	-	-	-		
5140737	CAP OUTLAY-WESTVIEW DRIVE LINE	833	-	-	-	-	-		
5140740	CAP OUTLAY-EQUIPMENT	29,879	33,415	15,317	58,500	442,000	483,249		
5140741	CAP OUTLAY-VEHICLES	60,145	33,080	37,364	-	-	-		
5140810	DEBT SERVICE-PRINCIPAL	175,000	185,000	215,956	185,000	185,000	185,000	-	0%
5140820	DEBT SERVICE-INTEREST	102,208	95,645	48,164	95,645	95,645	95,645	-	0%
5140850	STATE GRANT-WATER PROJECT	-	-	-	-	1,300,000	1,300,000		
5140916	TRANS TO PUBLIC WORKS FACILITIES	200,000	82,716	12,788	124,440	135,984	278,912	142,928	105%
5140990	FUND BALANCE-UNAPPROPRIATED	-	-	-	-	3,172,852	-		
	TOTAL EXPENDITURES	5,413,760	6,595,223	6,382,229	9,991,371	12,689,348	49,563,780		
	NET REVENUES OVER EXPENDITURES	3,343,058	2,135,692	7,203,277	-	-	-		

CEDAR CITY CORPORATION
BUDGET

ACCT #	DESCRIPTION	ACTUAL FY19/20	ACTUAL FY20/21	ACTUAL FY21/22	ADOPTED FY22/23	ADOPTED FY23/24	Revised FY23/24	$ Change	% Change
52	SEWER COLLECTION FUND								
	REVENUE								
5237161	IMPACT FEES	120,585	187,386	355,281	100,000	100,000	100,000	-	0%
5237191	TAPPING FEES	897	720	720	300	300	300	-	0%
5237310	SEWER SERVICE	1,874,904	1,857,137	1,944,688	1,857,000	1,857,000	1,857,000	-	0%
5237312	SEWER SERVICE-IRON COUNTY	51,553	76,151	75,732	76,000	76,000	76,000	-	0%
5237340	CONNECTION FEES	1,950	19,756	11,272	-	-	-	-	
5237400	LIFT STATION UPGRADE FEE	6,160	7,230	5,775	-	-	-	-	
5238100	INTEREST EARNINGS	85,658	23,460	37,016	25,000	25,000	25,000	-	0%
5238110	INTEREST-IMPACT FEES	1,246	335	1,934	-	-	-	-	
5238900	SUNDRY	-	1,772	-	-	-	-	-	
5238910	REIMB SEWER LINE REPLACEMENT	-	-	15,652					
5239700	CONTRIBUTIONS-OTHER SOURCES	321,011	585,822	1,591,860	-	-	-	-	
5239800	FUND BALANCE-APPROPRIATED	-	-	-	532,815	721,561	2,272,113	1,550,552	215%
	TOTAL REVENUE	2,463,963	2,759,768	4,039,930	2,591,115	2,779,861	4,330,413		
	EXPENSES								
5255110	SALARY & WAGES-PERM	184,043	218,827	269,158	273,058	295,344	295,344	-	0%
5255111	OVERTIME-PERM	15,956	14,446	15,806	22,000	26,000	26,000	-	0%
5255131	SOCIAL SECURITY-PERM	14,749	17,214	20,046	22,572	24,582	24,582	-	0%
5255132	EMPLOYEE INSURANCE	80,699	98,962	106,797	107,824	111,730	111,730	-	0%
5255133	STATE RETIREMENT	41,151	19,549	5,496	51,178	55,735	55,735	-	0%
5255134	WORKERS COMPENSATION	3,426	4,233	4,873	5,220	5,220	5,220	-	0%
5255135	UNEMPLOYMENT INSURANCE	298	228	532	1,180	964	964	-	0%
5255230	TRAVEL & TRAINING	735	1,443	2,912	4,000	4,000	4,000	-	0%
5255240	OFFICE SUPPLIES & EXPENSE	2,358	641	290	1,900	1,900	1,900	-	0%
5255251	GAS & OIL	13,833	18,439	29,354	30,000	30,000	30,000	-	0%
5255252	EQUIPMENT MAINTENANCE	16,126	17,783	20,160	30,000	30,000	30,000	-	0%
5255270	UTILITIES	15,213	7,724	8,188	26,300	26,300	26,300	-	0%
5255280	TELEPHONE	3,391	5,023	4,945	3,900	3,900	3,900	-	0%
5255290	SEWER LINE MAINTENANE	134,634	143,314	22,880	150,000	150,000	150,000	-	0%
5255300	ADMINISTRATION FEES	85,116	117,695	126,526	125,671	125,671	125,671	-	0%
5255310	PROF & TECH SERVICES	2,433	3,657	29,440	4,750	4,750	102,359	97,609	2055%
5255311	AUDIT	3,984	4,667	5,500	6,167	6,167	6,167	-	0%
5255312	COMPUTER & TECH SERVICES	1,464	1,721	6,244	5,706	5,706	5,706	-	0%
5255451	UNIFORM SERVICE	866	1,392	1,553	2,500	2,500	2,500	-	0%
5255480	SPECIAL DEPT SUPPLIES	11,696	5,111	6,366	13,000	13,000	13,000	-	0%
5255510	INSURANCE & SURETY BONDS	9,522	10,352	11,570	12,442	14,054	14,054	-	0%
5255511	LEGAL CLAIMS	1,647	-	-	7,500	7,500	7,500	-	0%
5255610	SUNDRY	329	471	117	750	750	750	-	0%
5255611	EMPLOYEE RECOGNITION	-	-	1,000	750	750	750	-	0%
5255650	DEPRECIATION	677,336	776,747	813,562	-	-	-	-	
		1,321,004	1,489,640	1,513,315	908,368	946,523	1,044,132	97,609	10.31%
5255700	CAP OUTLAY-MANHOLE REHAB	-	-	-	-	-	-		
5255730	CAP OUTLAY-IMPROVEMENTS	-	147,941	191,459	800,000	700,000	1,629,916		
5255731	CAP OUTLAY-LINE REPLACEMENT	9,629	-	508,099	500,000	500,000	537,305		
5255732	CAP OUTLAY-LINE UPSIZING	52,400	-	115,265	200,000	400,000	819,919		
5255734	CAP OUTLAY-WESTVIEW DRIVE	922,659	-	-	-	-	-		
5255735	CAP OUTLAY-2400 NORTH LINE	-	-	-	-	50,000	50,000		
5255739	CAP OUTLAY-4500 W	671,469	-	-	-	-	-		
5255740	CAP OUTLAY-EQUIPMENT	-	-	-	9,000	-	-		
5255741	CAP OUTLAY-VEHICLES	-	239,970	465,493	-	-	-		
5255914	TRANS TO SEWER PLANT FUND	125,058	125,058	125,058	125,058	125,058	125,058	-	0%
5255916	TRANS TO PUBLIC WORKS FACILITIES	200,000	93,864	12,561	48,689	58,280	124,083	65,803	113%
5255990	FUND BALANCE-UNAPPROPRIATED	-	-	-	-	-	-	-	
	TOTAL EXPENDITURES	3,302,218	2,096,473	2,931,251	2,591,115	2,779,861	4,330,413		
	NET REVENUES OVER EXPENDITURES	(838,255)	663,296	1,108,679	-	-	-		

CEDAR CITY CORPORATION
BUDGET

ACCT #	DESCRIPTION	ACTUAL FY19/20	ACTUAL FY20/21	ACTUAL FY21/22	ADOPTED FY22/23	ADOPTED FY23/24	Revised FY23/24	$ Change	% Change
53	SEWER PLANT FUND								
	REVENUE								
5337161	SEWER PLANT IMPACT FEES	265,703	390,251	358,150	300,000	300,000	300,000	-	0%
5337310	SEWER SERVICE	2,186,818	2,371,270	2,479,292	2,371,270	2,371,270	2,371,270	-	0%
5337311	SEWER SERVICE-ENOCH	131,682	164,503	141,250	164,503	164,503	164,503	-	0%
5337312	SEWER SERVICE-IRON COUNTY	122,058	88,246	112,794	88,246	88,246	88,246	-	0%
5337315	UNMETERED SEWER SERVICE	17,073	17,073	17,073	17,073	20,300	20,300	-	0%
5337500	NITRATE MITIGATION-ENOCH CITY	-	34,092	293,989	-	-	-	-	
5338100	INTEREST EARNINGS	197,713	53,653	48,202	50,000	50,000	50,000	-	0%
5338110	INTEREST-IMPACT FEES	2,586	692	1,143	1,000	1,000	1,000	-	0%
5338400	SALE OF FIXED ASSETS	13,040	6,774	7,024	-	-	-	-	
5338900	SUNDRY	4,362	3,143	4,068	2,000	2,000	2,000	-	0%
5338920	PRETREATMENT FEES	24,254	29,943	34,176	25,000	25,000	25,000	-	0%
5339400	TRANS FROM SEWER COLLECTION FUND	140,823	137,678	125,058	125,058	125,058	125,058	-	0%
5339800	FUND BALANCE-APPROPRIATED	-	-	-	225,994	-	2,491,505	2,491,505	
	TOTAL REVENUE	3,106,113	3,297,318	3,622,218	3,370,144	3,147,377	5,638,882		
	EXPENSES								
5356110	SALARIES & WAGES-PERM	384,936	424,810	538,177	537,773	624,967	624,967	-	0%
5356111	OVERTIME-PERM	22,679	21,802	27,225	34,000	36,000	36,000	-	0%
5356120	SALARIES & WAGES-TEMP	-	-	-	2,400	2,400	2,400	-	0%
5356123	SOCIAL SECURITY-TEMP	-	-	-	184	184	184	-	0%
5356131	SOCIAL SECURITY-PERM	31,115	34,447	39,937	43,741	50,564	50,564	-	0%
5356132	EMPLOYEE INSURANCE	140,430	150,530	170,001	175,753	204,998	204,998	-	0%
5356133	STATE RETIREMENT	84,909	31,775	159	98,314	113,214	113,214	-	0%
5356134	WORKERS COMPENSATION	6,471	7,623	8,770	8,280	8,640	8,640	-	0%
5356135	UNEMPLOYMENT INSURANCE	601	454	1,069	2,297	1,990	1,990	-	0%
5356210	SUBSCRIPTIONS & MEMBERSHIPS	280	457	520	1,500	1,500	1,500	-	0%
5356220	PUBLIC NOTICES	636	410	41	1,000	1,000	1,000	-	0%
5356230	TRAVEL & TRAINING	6,429	3,147	11,552	14,000	14,000	14,000	-	0%
5356240	OFFICE SUPPLIES & EXPENSE	4,142	4,462	3,562	6,000	8,000	8,000	-	0%
5356251	GAS & OIL	13,528	11,831	24,358	30,500	30,500	30,500	-	0%
5356252	EQUIPMENT MAINTENANCE	87,451	59,238	65,954	120,000	131,200	131,200	-	0%
5356254	CHEMICALS	113,439	141,579	139,518	196,500	218,000	218,000	-	0%
5356261	JANITORIAL SUPPLIES	1,046	917	1,722	2,000	2,000	2,000	-	0%
5356262	BUILDING & GROUND MAINTENANCE	99,304	31,517	52,996	20,000	40,000	40,000	-	0%
5356263	LAUNDRY	20	-	-	100	100	100	-	0%
5356270	UTILITIES	366,403	398,058	449,653	628,000	628,000	628,000	-	0%
5356280	TELEPHONE	3,605	4,723	4,793	4,600	4,600	4,600	-	0%
5356300	ADMINISTRATION FEES	128,922	165,557	173,162	188,953	198,941	198,941	-	0%
5356310	PROF & TECH SERVICES	18,755	25,078	18,825	30,000	30,000	30,000	-	0%
5356311	AUDIT	4,404	5,553	6,500	7,053	7,053	7,053	-	0%
5356312	COMPUTER & TECH SERVICES	4,485	6,453	5,893	12,471	12,471	12,471	-	0%
5356313	TESTING	32,528	30,441	37,972	50,000	50,000	50,000	-	0%
5356451	UNIFORM SERVICE	2,872	4,357	3,361	5,000	5,000	5,000	-	0%
5356480	SPECIAL DEPARTMENT SUPPLIES	15,103	11,446	12,039	20,000	20,000	20,000	-	0%
5356510	INSURANCE & SURETY BONDS	11,783	12,980	14,701	15,375	18,623	18,623	-	0%
5356610	SUNDRY	892	623	605	1,000	1,000	1,000	-	0%
5356611	EMPLOYEE RECOGNITION	-	-	1,348	1,350	1,350	1,350	-	0%
5356650	DEPRECIATION	706,074	706,693	800,035	-	-	-	-	
		2,293,242	2,296,961	2,614,450	2,258,144	2,466,295	2,466,295	0	0.00%
5356730	CAP OUTLAY-IMPROVEMENTS	823,573	2,407,197	234,819	-	-	332,162		
5356732	CAP OUTLAY-PLANT UPSIZING	-	-	-	-	-	1,900,000		
5356740	CAP OUTLAY-EQUIPMENT	5,000	174,314	92,148	1,112,000	102,000	940,425		
5356990	FUND BALANCE-UNAPPROPRIATED	-	-	-	-	579,082	-	(579,082)	-100%
	TOTAL EXPENDITURES	3,121,815	4,878,472	2,941,418	3,370,144	3,147,377	5,638,882		
	NET REVENUES OVER EXPENDITURES	(15,702)	(1,581,154)	680,800	-	-	-		

CEDAR CITY CORPORATION
BUDGET

ACCT #	DESCRIPTION	ACTUAL FY19/20	ACTUAL FY20/21	ACTUAL FY21/22	ADOPTED FY22/23	ADOPTED FY23/24	Revised FY23/24	$ Change	% Change
54	STORM DRAIN FUND								
	REVENUES								
5437110	STORM DRAIN FEES	736,395	816,177	812,494	816,177	1,200,000	1,200,000	-	0%
5437115	CITY DEPT. STORM DRAIN FEES	13,592	13,592	13,660	13,592	27,184	27,184	-	0%
5437150	REIMBURSEMENTS	-	-	100,000	-	-	-	-	
5437210	INTEREST EARNINGS	18,802	4,695	4,203	5,000	5,000	5,000	-	0%
5437211	INTEREST-IMPACT FEES	12,610	3,929	5,081	4,000	4,000	4,000	-	0%
5437250	STORM DRAIN IMPACT FEES	185,345	324,242	161,765	185,000	185,000	185,000	-	0%
5439600	BOND PROCEEDS	25,399	-	-	-	-	-	-	
5439800	FUND BALANCE-APPROPRIATED	-	-	-	-	491,787	1,237,933	746,146	152%
	TOTAL REVENUES	992,142	1,162,634	1,097,203	1,023,769	1,912,971	2,659,117		
	EXPENSES								
5440110	SALARIES & WAGES-PERM	79,755	80,814	112,504	152,603	175,563	175,563	-	0%
5440111	OVERTIME-PERM	1,824	273	2,115	3,000	3,000	3,000	-	0%
5440120	SALARIES & WAGES-TEMP	-	-	-	17,994	17,994	17,994	-	0%
5440123	SOCIAL SECURITY-TEMP	-	-	-	1,377	1,377	1,377	-	0%
5440131	SOCIAL SECURITY-PERM	6,079	6,074	7,310	11,904	13,661	13,661	-	0%
5440132	EMPLOYEE INSURANCE	42,376	41,954	44,192	67,993	56,665	56,665	-	0%
5440133	STATE RETIREMENT	14,851	8,932	7,261	25,245	28,963	28,963	-	0%
5440134	WORKERS COMPENSATION	1,776	1,893	1,933	3,780	4,680	4,680	-	0%
5440135	UNEMPLOYMENT INSURANCE	149	188	217	694	590	590	-	0%
5440230	TRAVEL & TRAINING	-	-	-	700	700	700	-	0%
5440251	GAS & OIL	13,305	5,531	33,979	9,775	12,025	12,025	-	0%
5440252	EQUIPMENT MAINTENANCE	13,075	6,381	17,942	7,000	7,000	7,000	-	0%
5440253	INFRASTRUCTURE MAINTENANCE	37,587	52,161	55,099	55,000	63,800	63,800	-	0%
5440280	TELEPHONE	569	513	507	500	500	500	-	0%
5440300	ADMINISTRATION FEES	117,463	144,189	150,171	164,428	170,842	170,842	-	0%
5440310	PROF & TECH SERVICES	20,433	3,577	138,134	3,750	3,750	3,750	-	0%
5440311	AUDIT	2,495	3,964	4,400	4,464	4,464	4,464	-	0%
5440451	UNIFORM SERVICE	(72)	207	250	850	850	850	-	0%
5440480	SPECIAL DEPARTMENT SUPPLIES	784	1,191	747	800	800	800	-	0%
5440510	INSURANCE & SURETY BONDS	3,242	3,400	3,687	8,999	9,915	9,915	-	0%
5440511	LEGAL CLAIMS	1,500	-	-	6,400	6,400	6,400	-	0%
5440610	SUNDRY	-	-	-	250	250	250	-	0%
5440611	EMPLOYEE RECOGNITION	-	-	50	300	300	300	-	0%
5440650	DEPRECIATION	288,505	293,177	304,146	-	-	-	-	
		645,695	654,419	884,643	547,806	584,089	584,089	0	0.00%
5440730	CAP OUTLAY-IMPROVEMENTS	-	-	154,935	20,000	75,000	104,765		
5440731	CAP OUTLAY-QUICHAPA CHANNEL	97,167	805	-	-	-	-		
5440732	CAP OUTLAY-LINE UPSIZING	138,745	132,436	1,052	-	500,000	841,068		
5440733	CAP OUTLAY-CROSS HOLLOW BASIN	-	189,343	-	-	26,000	26,000		
5440735	CAP OUTLAY-MOONLIGHT DRIVE	-	-	-	-	300,000	300,000		
5440736	CAP OUTLAY-PAIUTE STORM DRAIN	-	-	-	-	100,000	460,000		
5440737	CAP OUTLAY-WESTVIEW DRIVE	2,218	-	-	-	-	-		
5440740	CAP OUTLAY-EQUIPMENT	33,326	-	-	-	-	-		
5440741	CAP OUTLAY-VEHICLES	-	35,962	1,624	-	-	-		
5440810	DEBT SERVICE-PRINCIPAL	220,000	224,000	238,000	224,000	224,000	224,000	-	0%
5440820	DEBT SERVICE-INTEREST	74,733	70,883	46,251	70,883	70,883	70,883	-	0%
5440914	TRANS TO CAPITAL IMPROVEMENT FUND	26,741	26,507	25,055	25,055	25,055	25,055	-	0%
5440916	TRANS TO PUBLIC WORKS FACILITIES	79,526	56,641	8,757	6,540	7,944	23,257	15,313	193%
5440990	FUND BALANCE-UNAPPROPRIATED	-	-	-	129,485	-	-	-	
	TOTAL EXPENDITURES	1,318,152	1,390,996	1,360,317	1,023,769	1,912,971	2,659,117		
	NET REVENUES OVER EXPENDITURES	(326,010)	(228,363)	(263,114)	-	-	-		

CEDAR CITY CORPORATION
BUDGET

ACCT #	DESCRIPTION	ACTUAL FY19/20	ACTUAL FY20/21	ACTUAL FY21/22	ADOPTED FY22/23	ADOPTED FY23/24	Revised FY23/24	$ Change	% Change
55	SOLID WASTE FUND								
	REVENUES								
5537100	GARBAGE FEES	713,793	751,762	795,772	751,762	800,000	800,000	-	0%
5537105	CITY DEPT. GARBAGE COLL FEES	1,080	1,080	1,080	1,080	1,800	1,800	-	0%
5537110	GARBAGE CAN SALES	55,561	89,695	84,877	89,695	89,695	89,695	-	0%
5537120	COUNTY PROCESSING FEE	24,000	27,923	26,473	27,923	27,923	27,923	-	0%
5537200	INTEREST EARNINGS	42,734	8,396	8,258	8,000	8,000	8,000	-	0%
5537201	INTEREST EARNINGS-BULLOCH PIT	1,604	382	318	-	-	-	-	
5537900	FUND BALANCE-APPROPRIATED	-	-	-	226,326	240,979	638,977		
	TOTAL REVENUE	838,772	879,239	916,778	1,104,786	1,168,397	1,566,395		
	EXPENSES								
5540110	SALARIES & WAGES-PERM	156,224	159,111	180,318	185,386	199,522	199,522	-	0%
5540111	OVERTIME-PERM	-	14	-	-	-	-	-	
5540120	SALARIES & WAGES-TEMP	4,183	8,347	9,253	9,353	10,800	10,800	-	0%
5540123	SOCIAL SECURITY-TEMP	320	590	2,096	716	827	827	-	0%
5540131	SOCIAL SECURITY-PERM	12,031	12,568	13,270	14,182	15,263	15,263	-	0%
5540132	EMPLOYEE INSURANCE	53,846	47,444	44,803	55,351	54,854	54,854	-	0%
5540133	STATE RETIREMENT	27,863	11,854	1,461	30,889	33,244	33,244	-	0%
5540134	WORKERS COMPENSATION	3,679	3,922	4,661	4,680	5,220	5,220	-	0%
5540135	UNEMPLOYMENT INSURANCE	297	117	420	779	631	631	-	0%
5540230	TRAVEL & TRAINING	-	-	-	500	500	500	-	0%
5540251	GAS & OIL	48,115	48,387	82,480	74,520	74,520	74,520	-	0%
5540252	EQUIPMENT MAINTENANCE	41,640	33,132	34,117	37,300	37,300	37,300	-	0%
5540270	UTILITIES	124	137	138	200	200	200	-	0%
5540300	ADMINISTRATION FEES	139,003	143,680	152,491	164,122	169,252	169,252	-	0%
5540311	AUDITING	2,328	3,029	4,039	4,529	4,529	4,529	-	0%
5540312	COMPUTER & TECH SERVICES	121	-	1,474	353	353	353	-	0%
5540451	UNIFORM SERVICE	1,253	1,279	1,317	1,400	3,000	3,000	-	0%
5540480	SPECIAL DEPARTMENT SUPPLIES	3,403	846	2,253	1,500	3,900	3,900	-	0%
5540481	GARBAGE CANS	57,978	71,117	79,511	105,700	105,700	105,700	-	0%
5540510	INSURANCE & SURETY BONDS	6,652	7,388	8,261	8,999	9,915	9,915	-	0%
5540511	INSURANCE CLAIMS	-	5,432	435	5,000	5,000	5,000	-	0%
5540610	SUNDRY	198	1,164	1,062	1,500	1,500	1,500	-	0%
5540611	EMPLOYEE RECOGNITION	-	-	338	600	600	600	-	0%
5540612	SALES TAX	3,072	4,632	4,856	5,427	5,427	5,427	-	0%
5540640	LANDFILL CLOSURE EXPENSES	-	15,204	4,893	-	-	-	-	
5540641	RECYCLING PROGRAM	31,800	-	-	40,000	-	-	-	
5540650	DEPRECIATION	121,902	148,625	166,287	-	-	-	-	
		716,030	728,018	800,233	752,986	742,057	742,057	0	0.00%
5540740	CAP OUTLAY-EQUIPMENT	-	281,630	318,647	325,400	393,700	741,866		
5540916	TRANS TO PUBLIC WORKS FACILITIES	399,673	284,660	44,010	26,400	32,640	82,472		
	TOTAL EXPENDITURES	1,115,703	1,294,308	1,162,891	1,104,786	1,168,397	1,566,395		
	NET REVENUES OVER EXPENDITURES	(276,932)	(415,069)	(246,112)	-	-	-		

CEDAR CITY CORPORATION
BUDGET

ACCT #	DESCRIPTION	ACTUAL FY19/20	ACTUAL FY20/21	ACTUAL FY21/22	ADOPTED FY22/23	ADOPTED FY23/24	Revised FY23/24	$ Change	% Change
56	DOWNTOWN PARKING AUTHORITY								
	REVENUE								
5638100	ASSESSMENTS-MAINTENANCE	10,693	10,130	10,110	10,700	10,700	10,700	-	0%
5638200	RENTS-STALLS	5,625	4,998	5,399	5,800	5,800	5,800	-	0%
5638500	INTEREST EARNINGS	704	182	257	500	500	500	-	0%
5639100	ASSESSMENTS-MAINTENANCE	20,977	20,519	19,736	19,401	19,401	19,401	-	0%
5639200	RENTS-STALLS	10,059	10,151	9,851	8,712	8,712	8,712	-	0%
5639500	INTEREST EARNINGS	1,881	563	626	1,000	1,000	1,000	-	0%
5639800	FUND BALANCE-APPROPRIATED	-	-	-	28,528	15,028	25,149	10,121	67%
	TOTAL REVENUE	49,939	46,543	45,980	74,641	61,141	71,262		
	EXPENDITURES								
5640262	BUILDING & GROUND MAINTENANCE	13,854	170	-	5,000	20,000	30,121	10,121	51%
5640263	SNOW REMOVAL	5,525	2,600	4,900	5,000	7,000	7,000	-	0%
5640311	AUDIT	13	156	156	156	156	156	-	0%
5640510	INSURANCE & SURETY BONDS	604	612	525	612	612	612	-	0%
5641262	BUILDING & GROUND MAINTENANCE	5,001	7,152	7,916	43,000	8,000	8,000	-	0%
5641263	SNOW REMOVAL	4,813	2,256	4,670	2,500	7,000	7,000	-	0%
5641264	SWEEPING	-	-	-	500	500	500	-	0%
5641270	UTILITIES	3,651	3,285	2,683	7,800	7,800	7,800	-	0%
5641280	TELEPHONE	491	541	463	700	700	700	-	0%
5641311	AUDIT	22	161	161	161	161	161	-	0%
5641510	INSURANCE & SURETY BONDS	854	862	775	612	612	612	-	0%
		34,827	17,793	22,250	66,041	52,541	62,662	10,121	19.26%
5641900	TRANS TO REDEVELOPMENT AGENCY FUND	8,600	8,600	8,600	8,600	8,600	8,600		
	TOTAL EXPENDITURES	43,427	26,393	30,850	74,641	61,141	71,262		
	NET REVENUES OVER EXPENDITURES	6,512	20,149	15,130	-	-	-		

CEDAR CITY CORPORATION
BUDGET

ACCT #	DESCRIPTION	ACTUAL FY19/20	ACTUAL FY20/21	ACTUAL FY21/22	ADOPTED FY22/23	ADOPTED FY23/24	Revised FY23/24	$ Change	% Change
57	REDEVELOPMENT AGENCY FUND								
	REVENUE								
5739101	TAXES-PORT 15	446,323	366,930	498,920	498,920	498,920	498,920	-	0%
5739103	TAXES-GENPAK-INCENTIVE	233,868	165,296	187,487	-	-	-	-	
5739105	TAXES-MSC AEROSPACE	18,512	20,829	24,454	24,455	24,455	24,455	-	0%
5739106	TAXES-DECORWORX	-	12,126	15,733	15,733	15,733	15,733	-	0%
5739200	RENTS-LINS BUILDING	325,000	325,000	329,062	325,000	325,000	325,000	-	0%
5739310	STATE GRANT-STREET LIGHTS	75,000	-	-	-	-	-	-	
5739500	INTEREST EARNINGS	34,528	8,541	8,088	8,000	8,000	8,000	-	0%
5739801	TRANS FROM PARKING AUTHORITY	8,600	8,600	8,600	8,600	8,600	8,600	-	0%
5739900	FUND BALANCE-APPROPRIATED	-	-	-	-	285,192	299,079	13,887	5%
	TOTAL REVENUE	1,141,830	907,322	1,072,345	880,708	1,165,900	1,179,787		
	EXPENDITURES								
5740262	BUILDING & GROUND MAINTENANCE	6,071	3,025	27,376	22,000	22,000	22,000	-	0%
5740300	ADMINISTRATION FEE	5,000	5,000	5,025	5,000	5,000	5,000	-	0%
5740311	AUDIT	2,500	1,950	1,950	1,950	1,950	1,950	-	0%
5740510	INSURANCE & SURETY BONDS	6,290	7,807	8,276	8,975	10,791	10,791	-	0%
5740613	INCENTIVE-GENPAK	233,868	218,731	187,487	-	-	-	-	
5740614	INCENTIVE-MSC	-	-	-	24,455	24,455	24,455	-	0%
5740616	INCENTIVE-DECORWORX	-	15,949	15,733	15,733	15,733	15,733	-	0%
5740620	PORT 15-DEVELOPER	185,139	202,339	206,952	206,952	206,952	206,952	-	0%
5740621	PORT 15-IRON COUNTY SCHOOL DISTRICT	99,532	108,779	111,259	111,259	111,259	111,259	-	0%
5740622	PORT 15-CEDAR CITY HOUSING AUTHORITY	89,267	97,560	99,784	99,784	99,784	99,784	-	0%
5740623	PORT 15-ECONOMIC INCENTIVES	-	-	-	55,979	55,979	55,979	-	0%
5740624	PORT 15-ADMINISTRATION FEE	-	-	-	24,946	24,946	24,946	-	0%
5740633	INCENTIVE-TENANT IMPROVEMENTS	-	-	-	50,000	50,000	50,000	-	0%
		627,667	661,141	663,842	627,033	628,849	628,849	0	0.00%
5740730	CAP OUTLAY-IMPROVEMENTS	195,625	392,611	166,187	-	350,000	363,887		
5740810	DEBT SERVICE-PRINCIPAL	155,000	158,000	162,000	161,555	161,555	161,555		
5740820	DEBT SERVICE-INTEREST	32,151	29,051	25,496	25,496	25,496	25,496		
5740990	FUND BALANCE-UNAPPROPRIATED	-	-	-	66,624	-	-		
	TOTAL EXPENDITURES	1,010,442	1,240,803	1,017,525	880,708	1,165,900	1,179,787		
	NET REVENUES OVER EXPENDITURES	131,388	(333,480)	54,820	-	-	-		
58	MUNICIPAL BUILDING AUTHORITY								
	REVENUE								
5839500	INTEREST EARNINGS	2,752	114	-	-	-	-	-	
5839800	TRANS FROM GENERAL FUND	127,051	32,744	32,944	65,389	64,589	64,589	-	0%
5839801	TRANS FROM PUBLIC SAFETY IMPACT FEES	95,385	95,585	95,385	94,695	95,435	95,435	-	0%
	TOTAL REVENUE	225,188	128,443	128,329	160,084	160,024	160,024		
	EXPENDITURES								
5840220	PUBLIC NOTICES	-	-	-	250	250	250	-	0%
5840610	SUNDRY	-	-	-	280	280	280	-	0%
5840720	CAP OUTLAY-BUILDINGS	206,781	-	-	-	-	-	-	
5840811	DEBT SERVICE-PRIN ANIMAL SHELT	-	-	31,625	32,000	32,000	32,000	-	0%
5840812	DEBT SERVICE-PRIN FIRE TRUCK	81,000	82,000	83,000	84,000	86,000	86,000	-	0%
5840821	DEBT SERVICE-INT ANIMAL SHELT	30,219	31,625	30,295	31,625	30,825	30,825	-	0%
5840822	DEBT SERVICE-INT FIRE TRUCK	14,385	13,170	11,940	10,695	9,435	9,435	-	0%
5840830	BANK CHARGES	-	-	-	1,234	1,234	1,234	-	0%
	TOTAL EXPENDITURES	332,385	126,795	156,860	160,084	160,024	160,024		
	NET REVENUES OVER EXPENDITURES	(107,198)	1,648	(28,531)	-	-	-		

CEDAR CITY CORPORATION
BUDGET

ACCT #	DESCRIPTION	ACTUAL FY19/20	ACTUAL FY20/21	ACTUAL FY21/22	ADOPTED FY22/23	ADOPTED FY23/24	Revised FY23/24	$ Change	% Change
	INTERNAL SERVICE FUNDS								
61	PUBLIC WORKS FACILITIES								
	REVENUES								
6139101	TRANS FROM WATER	116,136	82,716	12,788	124,440	135,984	278,912	142,928	105%
6139102	TRANS FROM SEWER COLLECTION	114,070	81,244	12,561	48,689	58,280	124,083	65,803	113%
6139103	TRANS FROM STORM DRAIN	79,526	56,641	8,757	6,540	7,944	23,257	15,313	193%
6139104	TRANS FROM SOLID WASTE	399,673	284,660	44,010	26,400	32,640	82,472	49,832	153%
6139107	TRANS FROM CAP IMPROVEMENT FUND	142,090	101,201	15,646	120,780	169,608	333,758	164,150	97%
6139108	TRANS FROM CATS	275,065	253,639	-	3,151	3,544	6,930	3,386	96%
6139200	ADMINISTRATIVE CHARGES	93,319	162,458	201,923	207,817	220,182	220,182	-	0%
6139500	INTEREST EARNINGS	302	7	18	-	-	-	-	
6139600	SUNDRY REVENUE	-	-	-	-	-	-	-	
	TOTAL REVENUES	1,220,181	1,022,566	295,703	537,817	628,182	1,069,594		
	EXPENDITURES-PUBLIC WORKS FACILITIES								
6140110	SALARIES & WAGES-PERM	-	24,273	40,208	48,690	52,402	52,402	-	0%
6140120	SALARIES & WAGES-TEMP	5,237	5,421	5,640	10,165	12,165	12,165	-	0%
6140123	SOCIAL SECURITY-TEMP	400	415	431	777	930	930	-	0%
6140131	SOCIAL SECURITY-PERM	282	1,612	2,678	3,019	3,249	3,249	-	0%
6140132	EMPLOYEE INSURANCE	-	8,671	16,812	17,061	17,669	17,669	-	0%
6140133	STATE RETIREMENT	648	4,483	8,141	8,750	9,417	9,417	-	0%
6140134	WORKERS COMPENSATION	-	-	1,237	720	720	720	-	0%
6140135	UNEMPLOYMENT INSURANCE	12	25	84	236	193	193	-	0%
6140230	TRAVEL & TRAINING	-	-	213	1,000	1,000	1,000	-	0%
6140240	OFFICE SUPPLIES & EXPENSE	189	-	1,749	3,500	3,500	3,500	-	0%
6140251	GAS & OIL	-	793	-	10,400	10,400	10,400	-	0%
6140252	EQUIPMENT MAINTENANCE	-	-	-	-	2,000	2,000	-	0%
6140261	JANITORIAL SUPPLIES	1,571	1,777	2,781	2,300	4,300	4,300	-	0%
6140262	BUILDING & GROUND MAINTENANCE	6,013	6,610	9,005	11,427	11,427	11,427	-	0%
6140270	UTILITIES	38,089	19,778	20,919	26,200	26,200	26,200	-	0%
6140280	TELEPHONE	-	348	604	-	-	-	-	
6140310	PROF & TECH SERVICES	-	-	6,505	8,000	8,000	8,000	-	0%
6140311	AUDIT	67	33	33	33	33	33	-	0%
6140312	COMPUTER & TECH SERVICES	-	38	-	3,353	3,353	3,353	-	0%
6140510	INSURANCE & SURETY BOND	2,726	3,303	3,762	3,982	5,019	5,019	-	0%
6140650	DEPRECIATION	30,096	30,096	70,050	-	-	-	-	
		85,329	107,675	190,851	159,612	171,977	171,977	0	0.00%
6140730	CAP OUTLAY-IMPROVEMENTS	1,126,559	860,101	93,763	330,000	330,000	771,412		
6140740	CAP OUTLAY-EQUIPMENT	-	-	-	-	78,000	78,000		
6140900	TRANS TO GENERAL-PRINCIPAL	13,978	15,119	15,119	15,119	15,119	15,119	-	0%
6140901	TRANS TO WATER-PRINCIPAL	24,119	26,087	26,087	26,087	26,087	26,087	-	0%
6140910	TRANS TO GENERAL-INTEREST	6,859	5,136	2,568	2,568	2,568	2,568	-	0%
6140911	TRANS TO WATER-INTEREST	11,833	8,862	4,431	4,431	4,431	4,431	-	0%
		1,268,678	1,022,980	332,819	537,817	628,182	1,069,594	0	0.00%
	TOTAL EXPENDITURES	1,268,678	1,022,980	332,819	537,817	628,182	1,069,594		
	NET REVENUES OVER EXPENDITURES	(48,497)	(414)	(37,115)	-	-	-		

CEDAR CITY CORPORATION
BUDGET

ACCT #	DESCRIPTION	ACTUAL FY19/20	ACTUAL FY20/21	ACTUAL FY21/22	ADOPTED FY22/23	ADOPTED FY23/24	Revised FY23/24	$ Change	% Change
	SPECIAL REVENUE FUND								
76	PUBLIC SAFETY TASK FORCE								
	REVENUES								
7636100	FEDERAL GRANT	-	-	-	-	-	-		
7636110	STATE GRANT STFG	45,730	22,895	50,102	60,586	60,586	60,586		
7639100	UNRESTRICTED REVENUES	29,643	29,072	22,636	11,000	11,000	11,000		
7639110	TRANS FROM GENERAL FUND	-	-	-	-	21,500	21,500		
7639500	INTEREST EARNINGS	2,286	707	720	-	-	-		
	TOTAL REVENUE	77,660	52,674	73,457	71,586	93,086	93,086		
	EXPENDITURES								
7640110	SALARY & WAGES-PERM	-	937	(4,430)	-	-	-		
7640111	OVERTIME-PERM	21,815	9,650	15,514	19,500	19,500	19,500		
7640120	SALARIES & WAGES-TEMP	4,200	4,505	4,746	5,000	5,000	5,000		
7640131	SOCIAL SECURITY-PERM	775	730	3,683	1,000	1,000	1,000		
7640133	STATE RETIREMENT	776	832	16,190	1,000	1,000	1,000		
7640135	UNEMPLOYMENT INSURANCE	8	4	9	-	-	-		
7640210	EQUIPMENT, SUPPLIES, OPERATING	6,833	5,705	4,970	14,000	14,000	14,000		
7640230	TRAVEL & TRAINING	(216)	-	4,214	7,000	7,000	7,000		
7640250	CONFIDENTIAL INFORMANT	9,725	14,280	6,500	24,086	24,086	24,086		
7640510	INSURANCE & SURETY BONDS	97	96	108	-	-	-		
7643210	EQUIPMENT, SUPPLIES, OPERATING	15,064	24,202	41,676	-	21,500	21,500		
7643230	TRAVEL & TRAINING	-	523	15,070	-	-	-		
	TOTAL EXPENDITURES	59,077	61,463	108,250	71,586	93,086	93,086		
	NET REVENUES OVER EXPENDITURES	18,583	(8,789)	(34,792)	-	-	-		

CEDAR CITY CORPORATION
BUDGET

ACCT #	DESCRIPTION	ACTUAL FY19/20	ACTUAL FY20/21	ACTUAL FY21/22	ADOPTED FY22/23	ADOPTED FY23/24	Revised FY23/24	$ Change	% Change
	SID DEBT SERVICE FUNDS								
80	SID GUARANTEE FUND								
	REVENUES								
8038100	INTEREST EARNING	2	1	1	-	-	-		
8039400	TRANS FROM SID 79-2	-	-	-	-	-	-		
8039755	TRANS FROM SID 97-1	-	-	-	-	-	-		
8039756	TRANS FROM SID 98-1	-	-	-	-	-	-		
	TOTAL REVENUE	2	1	1	-	-	-		
	EXPENDITURES								
8095900	TRANS TO CAPITAL IMPROVEMENT FUND	-	-	-	-	-	-		
	TOTAL EXPENDITURES	-	-	-	-	-	-		
	NET REVENUES OVER EXPENDITURES	2	1	1	-	-	-		
82	SID 02-1								
	REVENUES								
8239100	ASSESSMENTS RECEIVED	-	-	-	-	-	-		
8239500	INTEREST EARNINGS	206	57	58	-	-	-		
8239800	TRANS FROM SID GUARANTEE FUND	-	-	-	-	-	-		
	TOTAL REVENUE	206	57	58	-	-	-		
	EXPENDITURES								
8240911	TRANS TO SPEC IMP GUARANTEE FD								
	TOTAL EXPENDITURES	-	-	-	-	-	-		
	NET REVENUES OVER EXPENDITURES	206	57	58	-	-	-		
86	SID 98-1								
	REVENUES								
8639100	SPECIAL ASSESSMENTS RECEIVED	-	-	-	-	-	-		
8639500	INTEREST EARNINGS	2	1	1	-	-	-		
	TOTAL REVENUE	2	1	1	-	-	-		
	EXPENDITURES								
8640911	TRANS TO SID GUARANTEE	-	-	-	-	-	-		
	TOTAL EXPENDITURES	-	-	-	-	-	-		
	NET REVENUES OVER EXPENDITURES	2	1	1	-	-	-		
97	SID 97-1								
	REVENUES								
9739100	SPECIAL ASSESSMENTS RECEIVED	-	-	-	-	-	-		
9739500	INTEREST EARNINGS	17	5	5	-	-	-		
	TOTAL REVENUE	17	5	5	-	-	-		
	EXPENDITURES								
9740911	TRANS TO SID GUARANTEE FUND	-	-	-	-	-	-		
	TOTAL EXPENDITURES	-	-	-	-	-	-		
	NET REVENUES OVER EXPENDITURES	17	5	5	-	-	-		

CEDAR CITY COUNCIL

AGENDA ITEM – 9

TO: Mayor and City Council

FROM: Tyler Galetka, Airport Manager

DATE: October 4, 2023

SUBJECT: Reconsider Airport Land Lease Rates

DISCUSSION:

During the June 14th, 2023 City Council Action Meeting, the Fiscal Year (FY) 24 budgeted fee schedule was amended to include the raising of the airport's lease rates. This included raising Improved Airport Land from $0.30 per sq. ft. per year to $0.60 per sq. ft. per year and the airport's raw land from $0.20 per sq. ft. per year to $0.40 per sq. ft. per year. These rates have placed the Cedar City Regional Airport as the highest airport rates in the state of Utah.

After significant feedback from airport tenants and the Airport Board, we are asking for the city council to reconsider the fee schedule regarding the Improved Airport Land and Airport Raw land rates.

AIRPORT GROUND LEASE FEES as of 2023

Code	Airport Name	Type	Hangar Lease Rates
SPK	Spanish Fork	General Aviation	.42 hangar ground lease .08 unimproved
PVU	Provo	Commercial	.55 hangar ground lease
HCR	Heber	General Aviation	.36 hangar ground lease - no unimproved amount
LGU	Logan	General Aviation	.22 hangar ground lease
OGD	Ogden	Commercial	.55 improved any verticle structure or .37 unimproved such as additional parking space
CNY	Moab	Commercial	.25 recent market study shows they could go to .40
SGU	St. George	Commercial	.25 for a Hangar Lease adjusts every 5 years
CDC	Cedar City	Commercial	.30 improved verticle structure or .20 unimproved such as parking
TVY	Tooele	General Aviation	No ground lease since airport owns all hangars
U42	South Valley	General Aviation	No ground lease since airport owns all hangars
BTF	Skypark	General Aviation	No Data
U14	Nephi	General Aviation	No Data
BMC	Brigham City	General Aviation	No Data
VEL	Vernal	Commercial	No Data

AMCG
Aviation Management Consulting Group

DECKER ASSOCIATES

Airport Rent Study

Grand County, Utah

Canyonlands Regional Airport

March 8, 2023

March 8, 2023

Tammy Howland
Airport Director
Canyonland Regional Airport
110 West Aviation Way
Moab, Utah 84532

RE: Airport Rent Study

Dear Tammy:

This summary report conveys Aviation Management Consulting Group (AMCG) and Decker Associates' (AMCG team's) opinion of market rent for certain aeronautical and non-aeronautical land located at Canyonlands Regional Airport which is currently leased or available for lease from Grand County.

The AMCG team is pleased to have been called on to conduct this study (which excluded a physical inspection of the Subject Properties) and provide an opinion of market rent. Please contact me if you have any questions pertaining to this analysis or the conclusions reached.

Helping your aviation management excellence,

David C. Benner, C.M.
Managing Consultant
Aviation Management Consulting Group

Robert D. Decker, MAI
Appraiser
Decker Associates
Utah Temp License No. 5479949-TCGO

TABLE OF CONTENTS

I. EXECUTIVE SUMMARY

Airport:	Canyonlands Regional Airport 110 West Aviation Way Moab, Utah 84532
Scope of Work:	This summary report conveys Aviation Management Consulting Group (AMCG) and Decker Associates' (AMCG team's) opinion of market rent for aeronautical and non-aeronautical land (Subject Properties) located at Canyonlands Regional Airport which are currently leased or available for lease from Grand County.
Subject Properties:	The components of the Subject Properties include Aeronautical Improved Land, Aeronautical Unimproved Land, and Non-Aeronautical Land.
Date of Report:	March 8, 2023
Effective Date:	January 10, 2023
Methodology:	An opinion of market rent for the Aeronautical Land (Improved and Unimproved) was developed based on an analysis of the information and data obtained for similar properties from national, regional, comparable, resort/destination, and competitive airports (which is summarized in Section VI. Study Findings). An opinion of market rent for the Non-Aeronautical Land was developed based on an analysis of the information and data obtained for similar properties in the local area (used for non-aeronautical, off-airport purposes). This information is summarized in Section VI. Study Findings.
Rental Rate Conclusions:	Table 1 identifies the AMCG team's opinion of market rent for the Subject Properties.

Table 1 – Rental Rate Conclusions

Rental Rate Conclusions Summary			
Component	Identification	Size (SF)	Market Rent Opinion
Aeronautical Improved Land	Zone 1	Up to 49,999	$0.40
		50,000 - 249,999	$0.38
		250,000 - 999,9999	$0.42
		1,000,000 and greater	$0.28
	Zone 2	Up to 49,999	$0.38
		50,000 - 249,999	$0.36
		250,000 - 999,9999	$0.40
		1,000,000 and greater	$0.26
	Zone 3	Up to 49,999	$0.36
		50,000 - 249,999	$0.34
		250,000 - 999,9999	$0.38
		1,000,000 and greater	$0.24
Aeronautical Unimproved Land	Zone 1	Up to 49,999	$0.30
		50,000 - 249,999	$0.29
		250,000 - 999,9999	$0.32
		1,000,000 and greater	$0.21
	Zone 2	Up to 49,999	$0.29
		50,000 - 249,999	$0.27
		250,000 - 999,9999	$0.30
		1,000,000 and greater	$0.20
	Zone 3	Up to 49,999	$0.27
		50,000 - 249,999	$0.26
		250,000 - 999,9999	$0.29
		1,000,000 and greater	$0.18
Non-Aeronautical Land	Zone 4		$0.70
	Zone 5		$0.50
	Zone 6		$0.30

All rental rates are "per square foot per year" (psf/yr)

II. INTRODUCTION

A. Scope of Work

This summary report conveys Aviation Management Consulting Group (AMCG) and Decker Associates' (the AMCG team) opinion of market rent for certain aeronautical and non-aeronautical land (Subject Properties) located at the Canyonlands Regional Airport (Airport) which is currently leased or available for lease from Grand County (County).

B. Market Rent Defined

Market rent is defined as the most probable rent which a property should bring in a competitive and open market (i.e., willing lessor and willing lessee) reflecting the terms and conditions of a specified lease agreement, including the rental adjustment mechanisms, permitted uses, use restrictions, expense obligations, term, renewal and purchase options, and tenant improvements.

C. Project Approach

To achieve the scope of work, AMCG completed the following work plan:

1. developed a profile of the Airport,
2. identified comparable and competitive airports utilizing the profile of the Airport,
3. obtained rental rates (and related information) for aeronautical uses from the Airport as well as comparable, resort/destination, and competitive airports identified,
4. analyzed the data obtained from the Airport as well as comparable, resort/destination, and competitive airports,
5. analyzed national and regional data,
6. obtained and analyzed data from off-airport, non-aeronautical land sales; and
7. developed an opinion of market rents for the Subject Properties based on the preceding analysis in conjunction with the Limiting Conditions outlined in the Appendix.

Due to the potential use of the Subject Properties (aeronautical vs. non-aeronautical), the AMCG team utilized two different approaches to derive an opinion of market rent. Consistent with the Federal Aviation Administration (FAA) Regulation Identifier Number (RIN) 2120-AF90, *Policy Regarding Airport Rates and Charges*, states that "rates, fees, rentals, landing fees, and other service charges ('fees') imposed on aeronautical users for the aeronautical use of the airport ('aeronautical fees') must be fair and reasonable." As such, the market rent opinions outlined in this *Airport Rent Study* are fair, reasonable, and can be consistently applied to the aeronautical-use land. Conversely, the FAA has generally interpreted the self-sustaining assurance to require airport sponsors to charge FMV [fair market value] for non-aeronautical uses of airport property as outlined in the FAA Order 5190.6B *Airport Compliance Manual.*

As such, the AMCG team analyzed land sales in the local area to determine a reasonable off-airport value as a basis for determining an opinion of market rent for Non-Aeronautical Land.

In drawing opinions of market rent for the Subject Properties, consideration was given to those factors that typically affect market rents for on-airport, aeronautical and non-aeronautical properties (e.g., property use, attributes, restrictions, limitations, etc.). Beyond this, the AMCG team's opinion of market rent for the aeronautical Subject Properties has been formed based on a comparative analysis of current rents for aeronautical-use properties at national, regional, comparable, resort/destination, and competitive airports. The rental rates currently charged for the Subject Properties by the County were not included in the national, regional, comparable, resort/destination, or competitive analysis. As such, those rates were not utilized to develop the opinion of market rent.

Market rents for off-airport properties were not utilized to determine market rent for aeronautical properties as this approach is highly problematic due to the different types of use. Off-airport properties and on-airport, aeronautical properties do not exhibit the same bundle of rights. It is very difficult, if not impossible, to determine the adjustment applied to unencumbered off-airport rental rates to reflect the constraints imposed by the FAA, the airport sponsor, and others pertaining to the development and/or use of on-airport, aeronautical properties. Conversely, on-airport, aeronautical properties provide access and use of the Airport infrastructure. The adjustment would need to reflect the fact that on-airport, aeronautical properties do not exhibit the same bundle of rights as off-airport properties.

When rendering an opinion of market rent for on-airport, aeronautical properties, the cost of the real property (land and/or improvements) and desired rates of return are not typically considered. While these factors may be considered when rendering an opinion of market rents for off-airport properties or may be considered by real estate investors, these factors are generally not consistent with the realities of the prevailing market for on-airport, aeronautical properties. Therefore, the AMCG team's opinion of on-airport, aeronautical market rents were not derived based on the cost of real property or desired rates of return for the aeronautical Subject Properties.

D. Key Underlying Assumptions

The market rent opinions conveyed in this summary report are based on the lessee having full and continued access to the Airport's airside (aeronautical Subject Properties only) and landside infrastructure.

Market rents are driven by the amount a willing buyer (lessee) pays to a willing seller (lessor) to rent or lease a property. To the extent that local economic factors affect rental rates at the national, regional, comparable, resort/destination, and competitive airports, these economic factors will be reflected in the rental rate conclusions. As such, AMCG has identified and analyzed (on a comparative basis) the rents charged and paid for similar aeronautical properties (by component) at a cross-section of airports to derive the market rent opinions for the Subject Properties.

AMCG recognizes that there are differences between the Airport and the comparable airports. Some of the comparable airports exhibit superior characteristics and some exhibit inferior characteristics. To identify airports that were considered most comparable to the Airport and draw conclusions that reflect the conditions at the Airport, the comparable airports were compared with the Airport using aeronautical activity and infrastructure indicators.

The following report summarizes the AMCG team's findings and opinions.

III. COMMUNITY OVERVIEW

A. Airport Sponsor

The Airport is owned and operated by the County with an Airport Advisory Board consisting of seven voting members and one non-voting member. The purpose of the Airport Advisory Board is to advise and make recommendations to the County and the Board of Commissioners on policy matters as it relates to operation and management of the Airport.

B. Geographic Location

The Airport is located approximately 15 miles northwest of the central business district of the City of Moab (City).

Figure 1 – Geographic Location

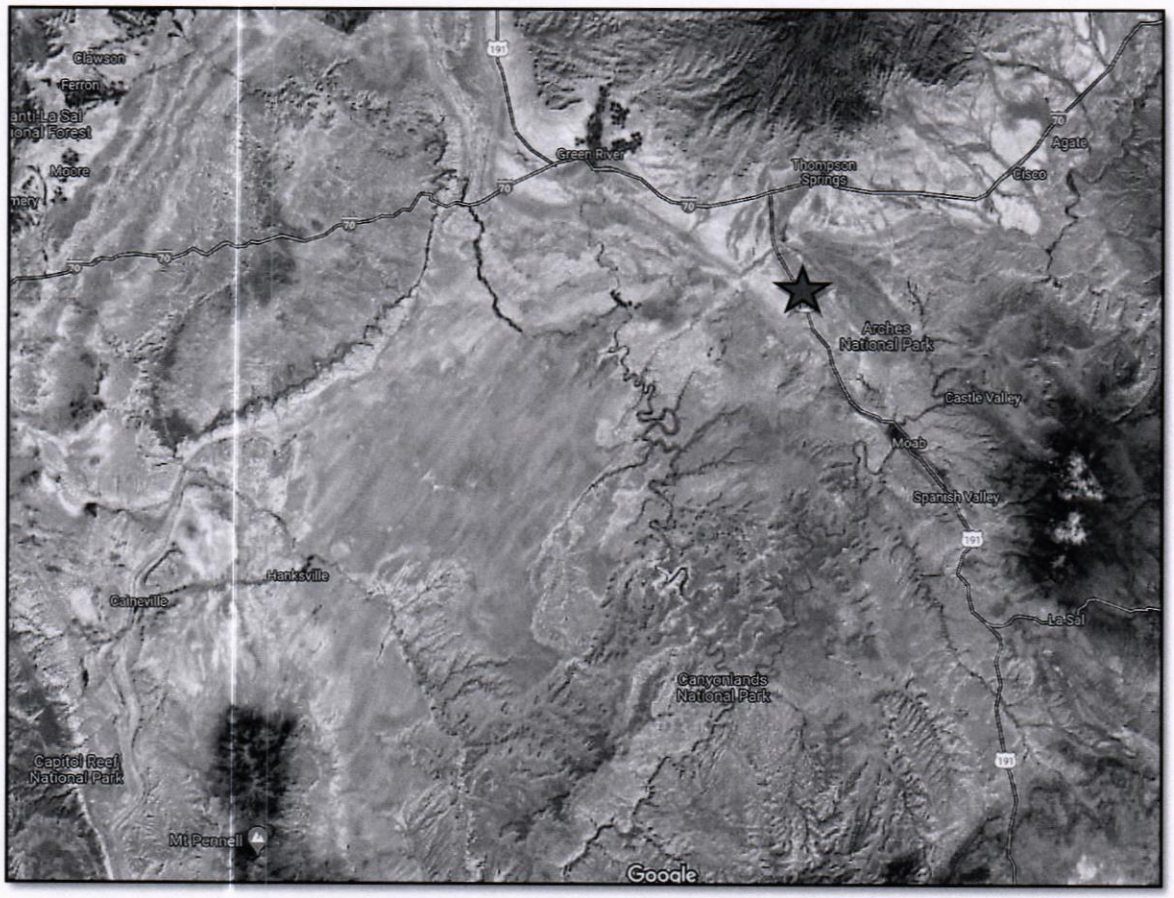

C. Demographics

The population of the County has increased a total of 7.2% which results in a compounded annual increase of 0.6% from 8,987 in 2010 to 9,630 in 2021 (U.S. Census Bureau Estimate).

D. Business and Industry

The largest employment sectors of the County are (1) construction, (2) accommodation and food services, and (3) arts, entertainment, and recreation. These employment sectors account for 36.6% of employment in the County.

E. Economic Factors

The civilian labor force of the County has increase from 8,924 in 2010 to 9,718 in 2021 (U.S. Census Bureau Estimate), which represents a total increase of 8.9% or a compounded increase of 0.8%.

As identified by the U.S. Bureau of Labor Statistics, the unemployment rate of the County was estimated at 4.5% (December 2022) which was higher than the U.S. national unemployment rate which was approximately 3.5%.

IV. SUBJECT AIRPORT OVERVIEW

A. Airport Description

The Airport, which consists of approximately 985 acres of land, has 2 runways, as follows:

- Runway 03/21: 7,360 feet long and 100 feet wide, grooved asphalt in good condition.
- Runway 15/33: 2,121 feet long and 60 feet wide, dirt and unpaved.

The Airport does not have an Air Traffic Control Tower and is served by multiple non-precision approaches (LOC, RNAV – GPS, VOR/DME). The Airport is designated a Primary Commercial Service Nonhub Airport in the FAA *National Plan of Integrated Airports System (NPIAS)*.

B. Aircraft Operations

Figure 2 depicts the general aviation aircraft operations (by category – local, itinerant, and total) at the Airport from 2018 to 2021, as reported by FAA Master Record 5010.

Figure 2 – General Aviation Aircraft Operations

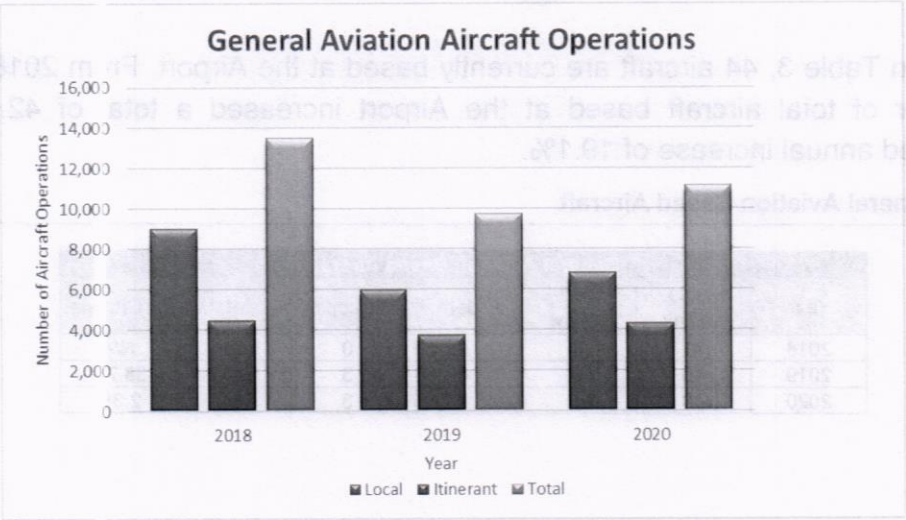

As shown in Table 2, total general aviation aircraft operations at the Airport have decreased from 13,500 in 2018 to 11,150 in 2020. This represents a total decrease of 17.4% and a compounded annual decrease of 9.1%.

Table 2 – General Aviation Aircraft Operations

General Aviation Aircraft Operations				
Year	Local	Itinerant	Total	% Change
2018	9,000	4,500	13,500	N/A
2019	6,000	3,750	9,750	-27.8%
2020	6,800	4,350	11,150	14.4%

C. Based Aircraft

Figure 3 illustrates the number of based aircraft at the Airport from 2018 to 2020, as reported by the FAA Master Record 5010.

Figure 3 – General Aviation Based Aircraft

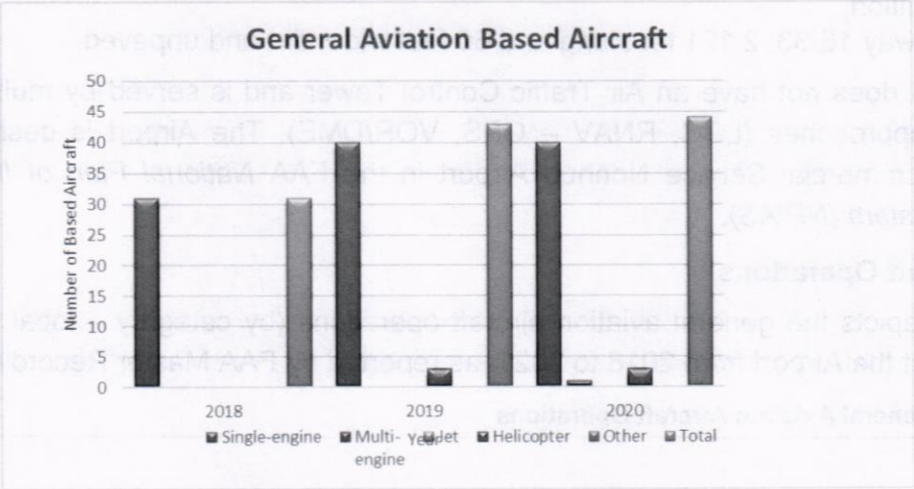

As shown in Table 3, 44 aircraft are currently based at the Airport. From 2018 to 2020, the number of total aircraft based at the Airport increased a total of 42.0%, or a compounded annual increase of 19.1%.

Table 3 – General Aviation Based Aircraft

General Aviation Based Aircraft						
Year	Single-engine	Multi-engine	Jet	Helicopter	Total	% Change
2018	31	0	0	0	31	N/A
2019	40	0	0	3	43	38.7%
2020	40	1	0	3	44	2.3%

D. Fuel Volumes

Figure 4 depicts total fuel volumes (by type – jet fuel and avgas) at the Airport from 2018 to 2021, as reported by Airport management.

Figure 4 – General Aviation Fuel Volumes

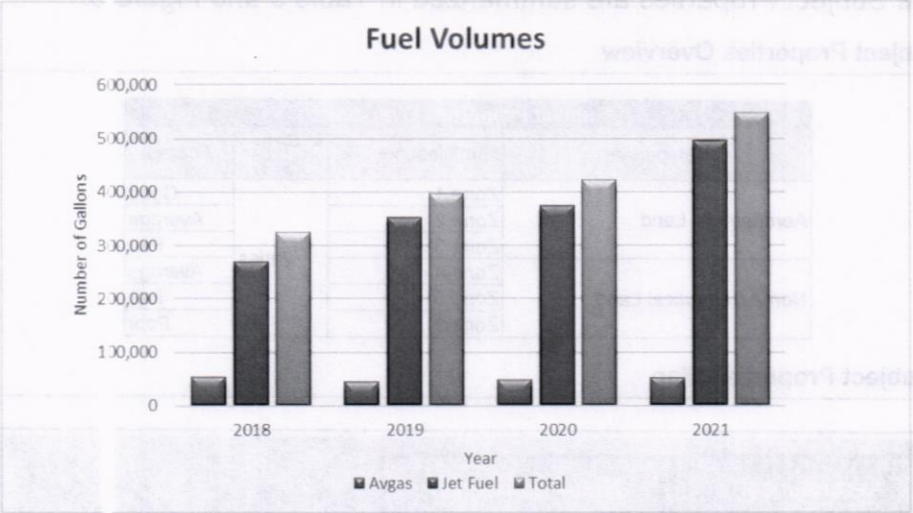

As depicted in Table 4 total fuel volumes increased from 324,292 gallons in 2018 to 548,870 gallons in 2021, which represents a total increase of 69.3% or a compounded annual increase of 19.2%. Additionally, approximately 87.8% of the fuel volume is jet fuel.

Table 4 – General Aviation Fuel Volumes

Fuel Volumes				
Year	Avgas	Jet Fuel	Total	% Change
2018	53,960	270,332	324,292	N/A
2019	44,460	352,763	397,223	22.5%
2020	47,616	374,628	422,244	6.3%
2021	52,494	496,376	548,870	30.0%

E. Commercial Operators

One fixed base operator (Redtail Air) provides fueling (jet and avgas), line services, aircraft parking (hangar and tiedown), and aircraft maintenance.

V. SUBJECT PROPERTIES OVERVIEW

A. Subject Properties

The Subject Properties consists of Aeronautical Land (Improved and Unimproved) and Non-Aeronautical Land located at the Airport that is leased or available for lease from the County. The Subject Properties are summarized in Table 5 and Figure 5.

Table 5 – Subject Properties Overview

Subject Properties Overview			
Component	Identiifcation	Size (SF)	Access
Aeronautical Land	Zone 1	Varies	Good
	Zone 2		Average
	Zone 3		Fair
Non-Aeronautical Land	Zone 4		Average
	Zone 5		Fair
	Zone 6		Poor

Figure 5 – Subject Properties Map

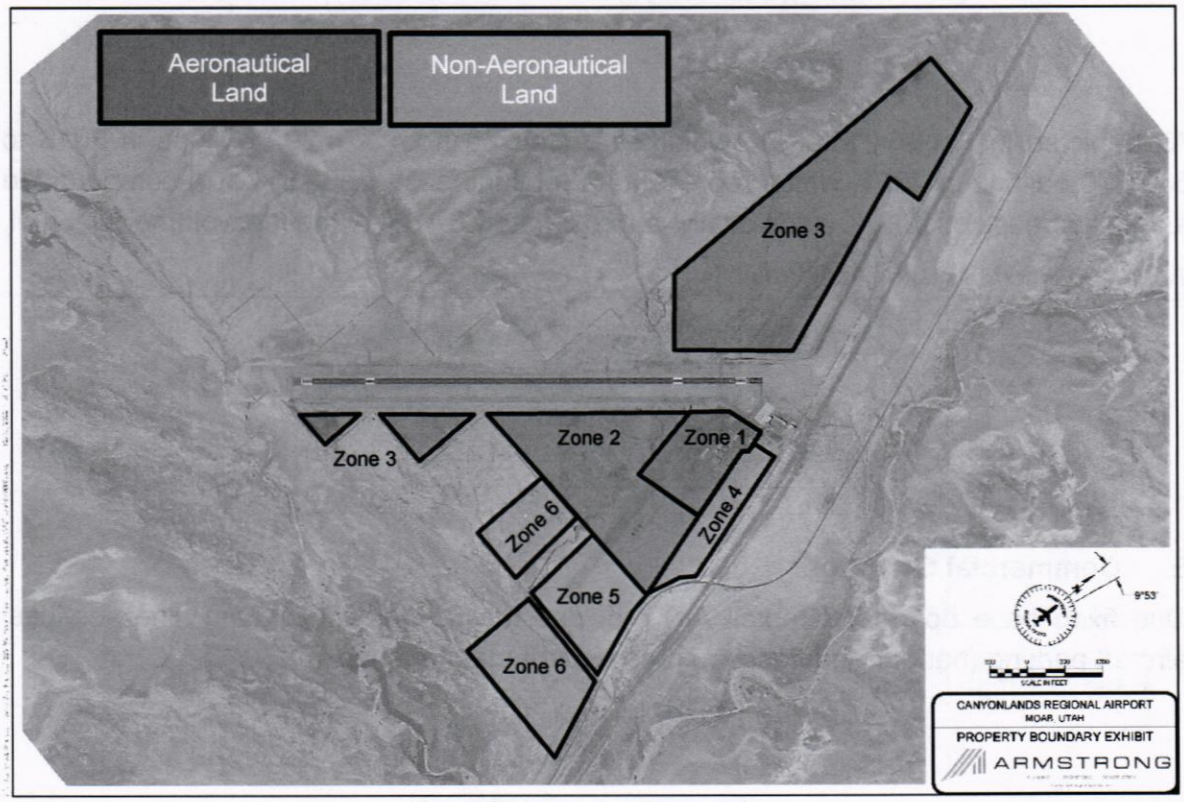

For reference purposes only

VI. STUDY FINDINGS

Information and data from similar properties at the Airport and national, regional, comparable, resort/destination, and competitive airports was analyzed to derive an opinion of market rent for the Aeronautical Land. The results of the analysis are summarized in this section. Definitions of the Minimum, Maximum, Mean, Standard Deviation, Median, and Range (utilized in the following tables) are provided in the Appendix.

A. National Data

Rents obtained over the last 10 years from more than 700 airports located throughout the United States were analyzed. A summary and statistical analysis of the findings for national airports is provided in Table 6.

Table 6 – National Airport Data Summary

National Airport Data Summary						
Component	Minimum	Maximum	Mean	Standard Deviation	Median	Range
Aeronautical Improved Land	$0.04	$1.69	$0.36	$0.26	$0.30	$1.65
Aeronautical Unimproved Land	$0.01	$1.06	$0.30	$0.20	$0.25	$1.05

All rental rates are "per square foot per year" (psf/yr)

B. Regional Data (FAA Northwest Mountain Region)

Rents obtained over the last 10 years from more than 110 airports in the FAA Northwest Mountain Region (consisting of Colorado, Idaho, Montana, Oregon, Utah, Washington, Wyoming) were analyzed. A summary and statistical analysis of the findings for regional airports is provided in Table 7.

Table 7 – Regional Airport Data Summary

Regional Airport Data Summary						
Component	Minimum	Maximum	Mean	Standard Deviation	Median	Range
Aeronautical Improved Land	$0.05	$1.10	$0.33	$0.22	$0.25	$1.05
Aeronautical Unimproved Land	$0.05	$0.90	$0.41	$0.21	$0.38	$0.85

All rental rates are "per square foot per year" (psf/yr)

C. Comparable Airport Data

The first step in identifying comparable airports is developing an accurate profile of the Airport. The profile was developed based on data available from various sources, including the FAA. The Airport profile provided the basis for establishing the criteria and parameters for identifying comparable airports.

The selection of comparable airports was based on aeronautical activity and infrastructure criteria including historic activity levels, total based aircraft, the absence of a control tower and precision instrument approach, runway length, total airport acreage, and FAA *National Plan of Integrated Airport Systems* (NPIAS) classification. Parameters were then established in each of these areas to facilitate the selection process.

While a total of 11 airports were considered comparable to the Airport, rental rates and useable information from 8 airports were obtained and analyzed, as shown in Table 8.

Table 8 – Comparable Airports

Comparable Airports		
Airport	**Identifier**	**Location**
Cortez Municipal Airport	CEZ	Cortez, Colorado
Grant County Airport	SVC	Hurley, New Mexico
Imperial County Airport	IPL	Imperial, California
Laramie Regional Airport	LAR	Laramie, Wyoming
Page Municipal Airport	PGA	Page, Arizona
Show Low Regional Airport	SOW	Show Low, Arizona
Sidney-Richland Airport	SDY	Sidney, Montana
Glasgow Valley County Airport	GGW	Glasgow, Montana

Table 9 provides a summary and statistical analysis of the findings for the comparable airports.

Table 9 – Comparable Airport Data Summary

Comparable Airport Data Summary						
Component	Minimum	Maximum	Mean	Standard Deviation	Median	Range
Aeronautical Improved Land	$0.10	$0.40	$0.25	$0.10	$0.25	$0.30
Aeronautical Unimproved Land	$0.05	$0.40	$0.23	$0.25	$0.23	$0.35

All rental rates are "per square foot per year" (psf/yr)

D. Resort/Destination Airports

The information and data collected from resort/destination airports will convey the rent structure and rental rates at airports serving similar markets catering to recreation, entertainment, and accommodations.

While a total of 12 airports have been identified as resort/destination airports, rental rates and useable information from 9 airports were obtained and analyzed as shown in Table 10.

Table 10 – Comparable Airports

Resort/Destination Airports		
Airport	**Identifier**	**Location**
Cedar City Regional Airport	CDC	Cedar City, Utah
Glacier Park International	GPI	Kalispell, Montana
Jackson Hole Airport	JAC	Jackson, Wyoming
Lake Tahoe Airport	TVL	Lake Tahoe, California
Memorial Field Airport	HOT	Hot Springs, Arkansas
Rifle Garfield County Airport	RIL	Rifle, Colorado
St. George Regional Airport	SGU	St. George, Utah
Telluride Regional Airport	TEX	Telluride, Colorado
Yellowstone Airport	WYS	Yellowstone, Montana

Table 11 provides a summary and statistical analysis of the findings for the resort/destination airports.

Table 11 – Resort/Destination Airport Data Summary

Resort/Destination Airport Data Summary						
Component	Minimum	Maximum	Mean	Standard Deviation	Median	Range
Aeronautical Improved Land	$0.09	$0.62	$0.32	$0.18	$0.29	$0.53
Aeronautical Unimproved Land	$0.20	$0.32	$0.26	$0.05	$0.25	$0.12

All rental rates are "per square foot per year" (psf/yr)

E. Competitive Airport Data

Typically, an airport is considered competitive if located in proximity to the Airport and serves a similar market. Each airport identified is then compared to the Airport based on (1) infrastructure and (2) available products, services, and facilities.

For the purposes of this study, airports within 100 nautical miles of the Airport were identified as being potentially competitive airports. While a total of 11 airports were considered competitive to the Airport, rental rates and useable information from 4 airports were obtained and analyzed, as shown in Table 12:

Table 12 – Competitive Airports

Competitive Airports		
Airport	**Identifier**	**Location**
Blake Field	AJZ	Delta, Colorado
Grand Junction Regional Airport	GJT	Grand Junction, Colorado
Roosevelt Municipal Airport	74V	Roosevelt, Utah
Telluride Regional Airport	TEX	Telluride, Colorado

Table 13 provides a summary and statistical analysis of the findings for the competitive airports.

Table 13 – Competitive Airport Data Summary

Competitive Airport Data Summary						
Component	Minimum	Maximum	Mean	Standard Deviation	Median	Range
Aeronautical Improved Land	$0.10	$0.51	$0.28	$0.21	$0.23	$0.41
Aeronautical Unimproved Land	$0.15	$0.15	$0.15	N/A	N/A	N/A

All rental rates are "per square foot per year" (psf/yr)

F. Non-Aeronautical Land

To derive conclusions for Non-Aeronautical Land, a survey of land sales in the Moab area was conducted. It is significant to note there is a limited number of larger land parcel sales that have occurred in recent years. As such, the AMCG team has included off-airport land sales with various zonings. A summary of the sales data is provided in Table 14.

Table 14 – Land Sales Summary

Land Sales Summary								
Sale Number	Location and Assessor Parcel Number	Sale Date	Zone Use	Size		Price		
				SF	Acres	Total	PSF	Per Acre
Subject Property	Non-Aeronautical Land at Canyonlands Regional Airport	N/A	Airport Conditional Use	Varies		N/A	N/A	N/A
1	2882 S. Hwy 191 Moab, Utah 84532	Dec-20	HC Salvage Yard	26,136	0.60	$500,000	$19.13	$833,333
2	2690 S. Hwy 191 Moab, Utah 02-0020-0099	Feb-21	HC Medical Office Building	26,136	0.60	$525,000	$20.09	$875,000
3	990 N. Main Street Moab, Utah 01-0036-0026	Mar-19	GC Motel	56,628	1.30	$1,505,400	$26.58	$1,158,000
4	193 Walnut Lane Moab, Utah 01-0001-0106 / 01-0001-0229	Nov-18	R4 Mobile Home Park	128,502	2.95	$1,800,000	$14.01	$610,169
5	1480 S. Hwy 191 Moab, Utah	May-21	HC Light Industrial	136,343	3.13	$1,200,000	$8.80	$383,387

Figure 6 – Land Sales Location Map

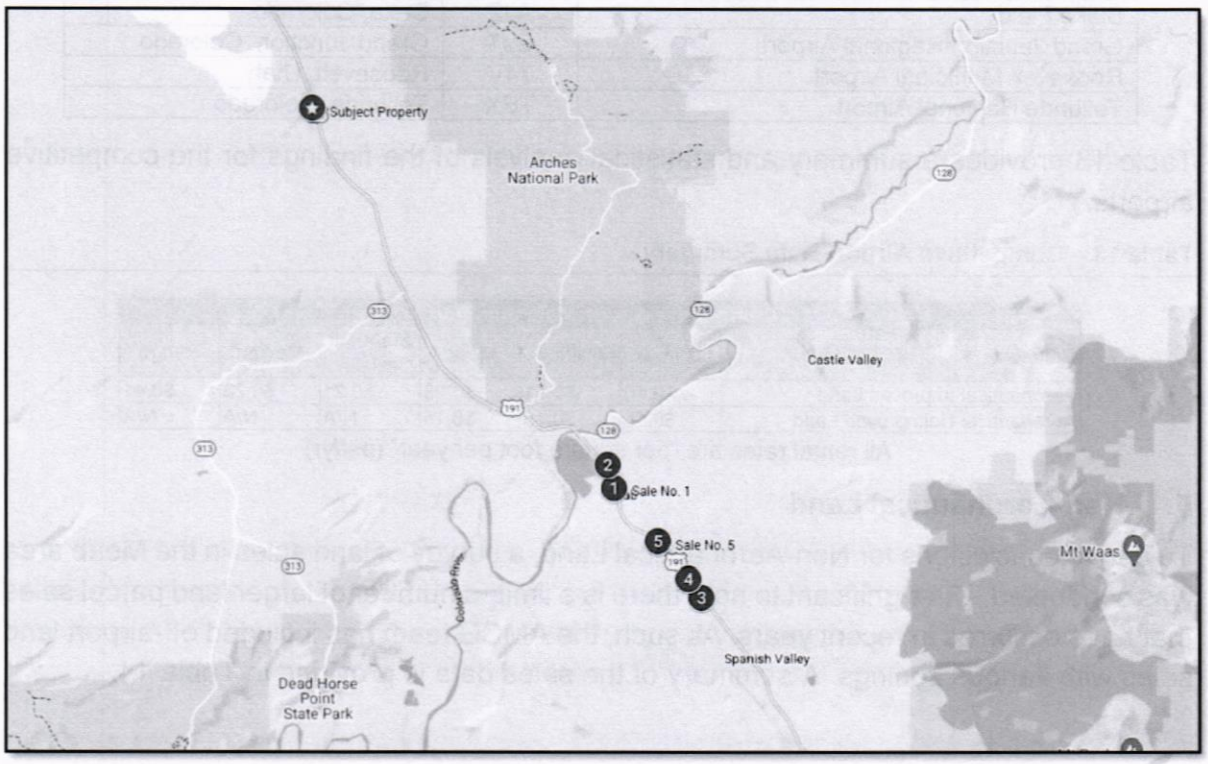

VII. RENTAL RATE SUMMARY

A. Introduction

The rental rate conclusions (effective January 10, 2023 which is consistent with the date of final property information provided and agreement on the research airports) are based on the analysis of the Subject Properties and (1) the rents being charged for similar properties at national, regional, comparable, resort/destination, and competitive airports or (2) information and data for similar properties in the local area used for off-airport purposes. The market rental rate conclusions are conveyed on a "per square foot per year" (psf/yr) basis.

B. Aeronautical Land Rental Rate Conclusions

To derive an opinion of market rent for the Aeronautical Land, information and data from similar properties at national, regional, comparable, resort/destination, and competitive airports was analyzed.

Throughout the following analysis, more weight has been given to the comparable airports, resort/destination airports, and competitive airports as the amenities and attributes and/or location of these airports and similar properties align with the Airport and the Subject Properties. As such, the rental rates at these airports are more reflective of relevant and useable data to establish rental rate conclusions for the Airport.

The average national, regional, comparable, resort/destination, and competitive rental rates are representative of airport properties with average airside and landside access.

Each of these attributes is rated using the following descriptors: poor, fair, average, good, and excellent. Once a base rental rate was derived for the Airport, specific conclusions were estimated for each component of the Subject Properties based on size and access. For the purposes of this analysis, size adjustments were developed, where appropriate, based on an analysis of AMCG's proprietary industry database (for all airports nationally). This process included an analysis of more than 4,500 data points correlating size ranges to existing rental rates compared to the national average rental rate.

1. Aeronautical Improved Land

The results of the study indicate that the average rental rates for Aeronautical Improved Land range from $0.25 psf/yr at comparable airports to $0.36 psf/yr at national airports. The average rental rate at competitive airports was $0.28 psf/yr and $0.33 psf/yr at regional airports. The average rental rate at resort/destination airports was $0.32 psf/yr. It is significant to note the rental rates for Aeronautical Improved Land range from a minimum of $0.09 psf/yr a maximum of $0.62 psf/yr at resort/destination airports.

Based on analyzing all available data, a base rental rate of $0.40 psf/yr was derived.

The average rental rate for Aeronautical Land exhibits the following size adjustments compared to the national average rental rate.

Table 15 – Aeronautical Land Rental Rate Size Adjustments

Rental Rate Size Adjustments	
Range (square feet)	**Adjustment (based on size)**
Up to 49,999	-5%
50,000 – 249,999	-10%
250,000 – 999,999	0%
Greater than 1,000,000	-35%

Utilizing the base rental rate and predicated on adjustments for size and access, the estimated rental rate conclusions are outlined in Table 16.

Table 16 – Aeronautical Improved Land Conclusions Summary

Aeronautical Improved Land Conclusions Summary					
Identification	Size (SF)	Base Rental Rate	Adjustments		Market Rent Opinion
			Size	Access	
Zone 1	Up to 49,999	$0.40	-5%	5%	$0.40
	50,000 - 249,999		-10%		$0.38
	250,000 - 999,9999		0%		$0.42
	1,000,000 and greater		-35%		$0.28
Zone 2	Up to 49,999		-5%	0%	$0.38
	50,000 - 249,999		-10%		$0.36
	250,000 - 999,9999		0%		$0.40
	1,000,000 and greater		-35%		$0.26
Zone 3	Up to 49,999		-5%	-5%	$0.36
	50,000 - 249,999		-10%		$0.34
	250,000 - 999,9999		0%		$0.38
	1,000,000 and greater		-35%		$0.24

All rental rates are "per square foot per year" (psf/yr)

2. *Aeronautical Unimproved Land*

The results of the study indicate that the average rental rates for Aeronautical Unimproved Land range from $0.15 psf/yr at competitive airports to $0.41 psf/yr at regional airports. The average rental rate at comparable airports was $0.23 psf/yr and $0.30 psf/yr at national airports. The average rental rate at resort/destination airports was $0.26 psf/yr. It is significant to note the rental rates for Aeronautical Unimproved Land range from a minimum of $0.05 psf/yr to maximum of $0.40 psf/yr at comparable airports.

Based on analyzing all available data, a base rental rate of $0.30 psf/yr was derived.

In addition to the above findings, a comparative analysis of data in the national airport database was conducted. This analysis included airports where Aeronautical Improved Land and Aeronautical Unimproved Land are both leased. Through this analysis, it was determined that an adjustment of -30% for Aeronautical Unimproved Land exists at such airports. Applying this adjustment to the Aeronautical Improved Land base rental rate ($0.40 psf/yr) would yield an Aeronautical Unimproved Land rental rate of $0.28 psf/yr.

The average rental rate for Aeronautical Land exhibits the following size adjustments compared to the national average rental rate.

Table 17 – Aeronautical Land Rental Rate Size Adjustments

Rental Rate Size Adjustments	
Range (square feet)	**Adjustment (based on size)**
Up to 49,999	-5%
50,000 – 249,999	-10%
250,000 – 999,999	0%
Greater than 1,000,000	-35%

Utilizing the base rental rate and predicated on adjustments for size and access, the estimated rental rate conclusions are outlined in Table 18.

Table 18 – Unimproved Land Conclusions Summary

Aeronautical Unimproved Land Conclusions Summary					
Identification	Size (SF)	Base Rental Rate	Adjustments Size	Adjustments Access	Market Rent Opinion
Zone 1	Up to 49,999	$0.30	-5%	5%	$0.30
	50,000 - 249,999		-10%		$0.29
	250,000 - 999,9999		0%		$0.32
	1,000,000 and greater		-35%		$0.21
Zone 2	Up to 49,999		-5%	0%	$0.29
	50,000 - 249,999		-10%		$0.27
	250,000 - 999,9999		0%		$0.30
	1,000,000 and greater		-35%		$0.20
Zone 3	Up to 49,999		-5%	-5%	$0.27
	50,000 - 249,999		-10%		$0.26
	250,000 - 999,9999		0%		$0.29
	1,000,000 and greater		-35%		$0.18

All rental rates are "per square foot per year" (psf/yr)

C. Non-Aeronautical Land Rental Rate Conclusions

To derive an opinion of market rent for the Non-Aeronautical Land, information and data from similar properties in the local area (used for off-airport purposes) was analyzed.

The result of the study indicates that the sale prices for off-Airport land range from $8.80 psf to $26.58 psf. It is significant to note that the Subject Properties used for non-aeronautical purposes have landside access but do not have airside access; however, the land is located within reasonable proximity to the Airport.

A "price per square foot" basis was used for this analysis which is the common unit of comparison utilized by buyers and sellers in the marketplace. Each of the land sales was compared to the Subject Properties and adjusted for dissimilarities. The specific elements of comparison considered are property rights conveyed, financing, conditions of sale, market conditions, location, and physical characteristics (i.e., configuration, topography, size, zoning, and utilities).

After adjusting the off-airport land sales for any dissimilarities (positively or negatively), a final value was determined by analyzing the off-Airport land sales providing the best indication of value. Each off-Airport land sale required adjustment since no land sale was identical to the Subject Properties. As such, the off-Airport land sales provide a range of value for the Subject Properties.

The AMCG team utilized quantitative adjustments to each of the off-airport land sales which are based on the AMCG team's experience determining market rent for similar on-airport properties. The quantitative adjustment process provides a more reasonable range of values for comparison with the on-Airport Non-Aeronautical Land as opposed to a precise quantification of adjustments.

The following provides an explanation of the comparison elements which were considered to determine the "as is" fee simple interest value of the Subject Properties which are further outlined in Table 19.

- Property Rights Conveyed – reflect all the rights of ownership in real estate.
- Financing – indicates whether the seller received all cash, or the seller carried a note which would typically require a discount.
- Conditions of Sale – reflect those unique conditions surrounding the land sale that require an adjustment.
- Market Conditions – represent those adjustments that are associated with the date of sale or unique circumstances surrounding the land sale.
- Location – accounts for the superiority/inferiority in terms of general location.
- Physical Characteristics – indicate those aspects which require specific physical comparison and include configuration, topography, size, zoning, and utilities.

Before adjustments the sale prices ranged from a price of $8.80 psf to $26.58 psf. After adjustments the adjusted sales ranged from $8.32 psf to $21.05 psf.

Table 19 – Land Sales Adjustment Grid

Land Sale Adjustment Grid						
Sale Number	**Subject Property**	**Land Sale 1**	**Land Sale 2**	**Land Sale 3**	**Land Sale 4**	**Land Sale 5**
Sale Price	N/A	$500,000	$525,000	$1,505,400	$1,800,000	$1,200,000
Size (acres)	5.0 or less	0.60	0.60	1.30	2.95	3.13
Price (psf)		$19.13	$20.09	$26.58	$14.01	$8.80
Property Rights Conveyed	Leased Fee	Fee Simple 0% $19.13	Fee Simple 0% $20.09	Fee Simple 0% $26.58	Fee Simple 0% $14.01	Fee Simple 0% $8.80
Financing	Cash or Equivalent	Cash to Sellar 0% $19.13	Cash to Sellar 0% $20.09	Cash to Sellar 0% $26.58	Cash to Sellar 0% $14.01	All Cash 0% $8.80
Conditions of Sale	Arms Length	Arm's Length 0% $19.13	Arm's Length 0% $20.09	Arm's Length 0% $26.58	Arm's Length 0% $14.01	Arm's Length 0% $8.80
Market Conditions	Jan-23	Dec 20 5% $20.09	Feb-21 5% $21.09	Mar 19 10% $29.24	Nov-18 20% $16.81	May-21 5% $9.24
Location Adjustment						
Location	Average	Good -20% $16.07	Good -20% $16.87	Good -20% $23.39	Good -20% $13.45	Average 0% $9.24
	Fair	Good -40% $12.05	Good -40% $12.65	Good -40% $17.55	Good -40% $10.09	Average -20% $7.39
	Poor	Good -60% $8.03	Good -60% $8.44	Good -60% $11.70	Good -60% $6.72	Average -40% $5.54
Physical Characteristics						
Configuration	Rectangular	Rectangular 0%	Rectangular 0%	Rectangular 0%	Rectangular 0%	Rectangular 0%
Topography	Level	Level 0%	Slope 5%	Level 0%	Level 0%	Level 0%
Size (acres)	5.0 or less	0.60 -10%	0.6 -10%	1.30 0%	2.95 0%	3.13 0%
Zoning	Airport Conditional Use	HC -10%	Commercial -10%	GC -10%	R4 -10%	HC -10%
Utilities	Existing	Existing 0%	Existing 0%	Existing 0%	Existing 0%	Existing 0%
Total Physical Adjustments	N/A	-20%	-15%	-10%	-10%	-10%
Total Adjusted Price (average)	N/A	$12.86	$14.34	$21.05	$12.10	$8.32
Total Adjusted Price (fair)		$9.64	$10.76	$15.79	$9.08	$6.65
Total Adjusted Price (poor)		$6.43	$7.17	$10.53	$6.05	$4.99
Conclusion (Average Location): $10.00						
Conclusion (Average Location): $7.00						
Conclusion (Average Location): $4.00						

Based on analyzing all available data, an "as is" fee simple value of $10.00 psf (average location), $7.00 psf (fair location), and $4.00 psf (poor location) was determined.

Airport land, utilized for aeronautical or non-aeronautical purposes, demonstrate only partial rights of ownership as the lessee does not have fee simple rights. The lessor has the right to receive income during a certain period but gives up the right of the use of the land during the time of the lease. On a fee simple basis (i.e., for off-airport land), all property rights are included with the land.

Airport land is also restricted to certain types of uses, by 14 CFR Part 77 requirements, and subject to additional restrictions of the airport sponsor. Based on the AMCG team's experience analyzing non-aeronautical use of airport land, it is the AMCG team's opinion that a discount of 30% to 90% of fee simple value is appropriate for when comparing off-airport land and on-airport land depending on the impacts of zoning, 14 CFR Part 77, and airport design to the Subject Properties.

The Subject Properties are not impacted by certain 14 CFR Part 77 surfaces (i.e., primary surface, approach surface, transitional surface, or conical surface) and is not within certain airport design areas (i.e., Runway Safety Area, Runway Object Free Area, or Runway Protection Zone) which results in a discount on the lower end of the range.

As such, a discount of 30% was applied to the fee simple value.

To determine a rental rate from the concluded on-Airport value, the AMCG team obtained and considered rates of return for airport-based properties from a cross section of airports (ranging from General Aviation to Large Hub Primary Commercial Service airports). Airport sponsors indicated rate of return expectations range from 3.0% to 15.0%, with 10.0% identified as most common. Further, rates of return are also influenced by the size, complexity, historical practices, demand, and availability of property for development. It is also important to note the rate of return of expectations are based on typical lease terms of 20-30 years.

It is the AMCG team's opinion that a 10.0% rate of return is reasonable and appropriate for the Airport.

Predicated on the preceding criteria, the following conclusions were derived.

Table 20 – Non-Aeronautical Land Conclusions Summary

Non-Aeronautical Land Conclusions Summary					
Identification	Off-Airport Base Value	On-Airport Adjustment	Rate of Return	Calculated Result	Market Rent Opinion
Zone 4	$10.00			$0.70	$0.70
Zone 5	$7.00	-30%	10%	$0.49	$0.50
Zone 6	$4.00			$0.28	$0.30

D. Rental Rate Summary (for the Subject Properties)

Table 21 identifies the AMCG team's opinion of market rent for the Subject Properties.

Table 21 – Rental Rate Conclusion Summary

Rental Rate Conclusions Summary			
Component	Identification	Size (SF)	Market Rent Opinion
Aeronautical Improved Land	Zone 1	Up to 49,999	$0.40
		50,000 - 249,999	$0.38
		250,000 - 999,9999	$0.42
		1,000,000 and greater	$0.28
	Zone 2	Up to 49,999	$0.38
		50,000 - 249,999	$0.36
		250,000 - 999,9999	$0.40
		1,000,000 and greater	$0.26
	Zone 3	Up to 49,999	$0.36
		50,000 - 249,999	$0.34
		250,000 - 999,9999	$0.38
		1,000,000 and greater	$0.24
Aeronautical Unimproved Land	Zone 1	Up to 49,999	$0.30
		50,000 - 249,999	$0.29
		250,000 - 999,9999	$0.32
		1,000,000 and greater	$0.21
	Zone 2	Up to 49,999	$0.29
		50,000 - 249,999	$0.27
		250,000 - 999,9999	$0.30
		1,000,000 and greater	$0.20
	Zone 3	Up to 49,999	$0.27
		50,000 - 249,999	$0.26
		250,000 - 999,9999	$0.29
		1,000,000 and greater	$0.18
Non-Aeronautical Land	Zone 4		$0.70
	Zone 5		$0.50
	Zone 6		$0.30

All rental rates are "per square foot per year" (psf/yr)

VIII. APPENDIX

A. Limiting Conditions

This report is subject to the following conditions and to other specific and limiting conditions as described by Aviation Management Consulting Group, Inc. (AMCG) in this report.

1. AMCG assumes no responsibility for matters legal in nature affecting the Subject Properties, nor does AMCG render any opinion as to the title of the Subject Properties, which are assumed to be good and marketable. All existing liens and encumbrances, if any, have been designated and the Subject Properties have been analyzed as though free and clear and held under responsible ownership and competent management.
2. Information, estimates, and opinions furnished to AMCG and contained in this report were obtained from sources considered to be reliable and are believed to be true and correct. However, AMCG assumes no responsibility for their accuracy.
3. Although dimensions were taken from a source considered reliable, this should not be construed as a survey. The exact size of the Subject Properties and legal description (as appropriate) should be verified by a licensed engineer or surveyor.
4. Unless noted in this report, the conclusions do not include contributory value of any personal property, furniture, fixtures, equipment, or on-going business value.
5. It is assumed that the utilization of the Subject Properties is within the boundaries or property lines and that there is no encroachment or trespass unless noted in this report.
6. This report is prepared for the sole, exclusive use of the client. No third parties are authorized to rely on this report without the prior written consent of AMCG.
7. It is assumed that all applicable zoning and use regulations have been complied with unless a non-conformity was stated, defined, and considered in this report.
8. It is assumed that all required licenses, certificates of occupancy, consents, or other legislative or administrative authority from any local, state, or federal government or private entity or organization have been or can be obtained or renewed for any use on which the conclusions are based.
9. Full compliance with all applicable federal, state, and local environmental regulations and laws is assumed unless noncompliance is stated, defined, and considered in this report.
10. AMCG does not have any knowledge of the existence of potentially hazardous material, gases, toxic waste, or mold on or in the Subject Properties. To AMCG's knowledge, the presence of potentially hazardous waste, materials, or gases has not been detected, or if they have been detected, it has been determined that the amount or level is considered to be safe according to standards established by the Environmental Protection Agency (EPA). However, AMCG is not qualified to detect such substances and does not make any guarantees or warranties that the Subject Properties have been tested for the presence of potentially hazardous waste materials or gases, if tested, that the tests were conducted pursuant to EPA-approved procedures. The existence of any potentially hazardous materials, gases, toxic waste, or mold may have an effect on the conclusions. An expert in this field should be retained by the client if desired.
11. AMCG is not a property or environmental inspector. The AMCG team has provided an opinion of rent. This report does not guarantee that the Subject Properties are free of defects of environmental issues. AMCG is not qualified to determine the existence of mold, the cause of mold, the type of mold, or whether, if any, mold exists, the mold might pose any risk to the Subject Properties or its inhabitants. A professional property inspector or environmental inspection is recommended.

12. It is assumed the Subject Properties will have an adequate supply of energy in the future.

13. The American with Disabilities Act (ADA) became effective January 26, 1992. AMCG has not made a specific compliance survey and analysis of the Subject Properties to determine if the Subject Properties are in conformity with the various detailed analysis of the requirements of the ADA. It is possible that a compliance survey of the Subject Properties together with a detailed analysis of the requirements of the ADA could reveal that the Subject Properties are not in compliance with one or more of the requirements of the ADA. If so, this fact could have a negative impact on the conclusion. Since AMCG has no direct evidence relating to this issue, possible noncompliance with the requirements of the ADA was not considered in the analysis.

14. AMCG assumes there are no hidden or unapparent conditions of the Subject Properties, subsoil, or structures that would render the Subject Properties more or less valuable. AMCG assumes no responsibility for such conditions or for engineering that might be required to discover such factors.

15. No requirements shall be made of AMCG to give testimony or appear in court by reason of this report of the Subject Properties in question, unless arrangements have been made previously. If any courtroom or administrative testimony is required in connection with this report, additional fees and expenses shall be charged for those services.

16. Possession of this report, or copy hereof, does not carry with it the right of publication nor may it be used for any purpose whatsoever by any entity but the client without the prior written consent of AMCG and the client.

17. Neither all nor any part of the contents of this report shall be disseminated to the public through advertising media or public means of communication without the prior written consent of AMCG and the client.

B. Certifications

We certify that, to the best of our knowledge and belief…

- The statements of fact contained in this report are true and correct.
- The reported analyses, opinions, and conclusions are limited only by the reported assumptions and limiting conditions and represent our personal, impartial, unbiased professional analyses, opinions, and conclusions.
- We have no present or prospective interest in the Subject Properties and no personal interest with respect to the parties involved with this assignment.
- We have no bias with respect to the Subject Properties or to the parties involved with this assignment.
- This assignment was not contingent on developing or reporting predetermined results.
- Our compensation for completing this assignment is not contingent on the development or reporting of a predetermined value or direction in value that favors the cause of the client, the amount of the value opinion, the attainment of a stipulated result, or the occurrence of a subsequent event directly related to the intended use of this report.
- The reported analyses, opinions, and conclusions were developed, and this report has been prepared in conformity with the requirements of the Code of Professional Ethics and Standards of Professional Appraisal Practice of the Appraisal Institute.
- The reported analyses, opinions, and conclusions were developed, and this report has been prepared in conformity with the Uniform Standards of Professional Appraisal Practice.
- The use of this report is subject to the requirements of the Appraisal Institute relating to review by its duly authorized representatives.
- David Benner and Robert Decker did not make a personal inspection of the Subject Properties.
- As of the date of this report, I, Robert D. Decker, MAI, has completed the continuing education program of the Appraisal Institute.
- We have performed no services, as an appraiser or in any other capacity, regarding the Subject Properties within the three-year period immediately preceding acceptance of this assignment.
- The following opinion of market value has been derived for the Subject Properties as of June 28, 2022:

Market Rent Conclusions		
Component	Identification	Market Rent Opinion
Aeronautical Improved Land	Zone 1	$0.28 - $0.42
	Zone 2	$0.26 - $0.40
	Zone 3	$0.24 - $0.38
Aeronautical Unimproved Land	Zone 1	$0.21 - $0.32
	Zone 2	$0.20 - $0.30
	Zone 3	$0.18 - $0.29
Non-Aeronautical Land	Zone 4	$0.70
	Zone 5	$0.50
	Zone 6	$0.30

David C. Benner, C.M.
Managing Consultant
Aviation Management Consulting Group.

Robert D. Decker, MAI
Appraiser
Decker Associates
Utah Temp License No. 5479949-TCGO

C. Definitions and Acronyms

- Aeronautical Improved Land – Airport land having access (airside and landside) and utilities to the property boundary.
- Aeronautical Unimproved Land – Airport land without airside and/or landside access and/or utilities to the property boundary.
- Commercial – An activity undertaken with the intent to generate and/or secure earnings, income, or compensation (including exchange or barter of goods or services), and/or profit, whether or not such objectives are accomplished.
- GPS – Global positioning system.
- Itinerant – Aircraft operations terminated at an airport which (1) arrive from outside the airport area or (2) depart the airport and leave the airport area.
- Local – Aircraft operations which (1) remain in the local traffic pattern, (2) execute simulated instrument approaches or low passes at an airport, or (3) operate to or from an airport and a designated practice area within a 20-mile radius of the Air Traffic Control Tower.
- ILS – Instrument Landing System.
- Maximum – Maximum value present in the data range.
- Mean – Arithmetic average of all data in the data range.
- Median – Value wherein half of the data points in the number series are below while half of the data points in the number series are above.
- Minimum – Minimum value present in the data range.
- Non-Aeronautical Land – Airport land having landside access but no airside access.
- Non-Commercial – Not for the purpose of securing earnings, income, compensation (including exchange or barter of goods and services), and/or profit.
- Range – Mathematical difference between the maximum and minimum values of the data range.
- RNAV – GPS – Area navigation-global positioning system.
- Standard Deviation – Statistical method designed to mathematically measure the variability in a set of data points. The calculated figure for standard deviation is indicative of the relative distance between the mean and every data point. For a normally distributed data range, approximately 68% of the data points would fall within one standard deviation of the mean, as illustrated by a normal bell curve. Similarly, approximately 95% of the data points would fall within two standard deviations, while approximately 99.7% of the data points would fall within three standard deviations of the mean. Assuming the data points from the airports are representative of the population and the population follows a normal bell curve, the calculated standard deviation values would illustrate the relative variability in data points (i.e., how close these data points are to the mean).
- VOR – Very high frequency omnidirectional range.
- VOR/DME – Very high frequency omnidirectional range/distance measuring equipment.

D. Appraiser Temporary License

STATE OF UTAH
DEPARTMENT OF COMMERCE
DIVISION OF REAL ESTATE
Temporary Certified General Appraiser
5479949-TCG0

Signature of Holder

DATE ISSUED: 02/13/2023
EXPIRATION DATE: 08/13/2023

ROBERT D DECKER
7800 S Elati St STE 108
Littleton CO 80120

- Your license is valid until the expiration date listed on your license.
- Above is your public address of record for the Division. All correspondence will be mailed to this address. It is your responsibility to notify us directly if your address changes
- Please visit our website at www.realestate.utah.gov should you have any questions in the future.

STATE OF UTAH
DEPARTMENT OF COMMERCE
DIVISION OF REAL ESTATE
Active

DATE ISSUED: **02/13/2023**
EXPIRATION DATE: **08/13/2023**

LICENSE NUMBER: **5479949-TCG0**

LICENSE TYPE: **Temporary Certified General Appraiser**
110 W Aviation Way, Moab, UT 84532

ISSUED TO: **ROBERT D DECKER**

SIGNATURE OF HOLDER

REAL ESTATE DIVISION DIRECTOR

CEDAR CITY COUNCIL
AGENDA ITEM 10

INFORMATION SHEET

TO: Mayor and City Council

FROM: Ryan Marshall, Corey Childs

DATE: Oct 2, 2023

SUBJECT: Surplus Auction

DISCUSSION: It is time again to surplus some items. The following items have been deemed surplus by the divisions that used them. These items have exceeded their useful life or have developed more problems than feasible to repair. The method that we have found that works best for us is by using an online auction site that specializes in government surplus. The site is: publicsurplus.com. We are seeking your approval to surplus the following items:

1. 2013 Ford E450
2. 2016 Ford E450
3. 2003 Chevy 1500
4. Samsung Excavator
5. Salt Spreader
6. Basketball Hoops from aquatic center
7. Old Truck bed
8. Trailer axles
9. 1977 Water truck at arena
10. Pile of waste brass and copper
11. Water well tube, shaft, and casing
12. 21 HP engine
13. Hose reels
14. 2013 American LaFrance truck
15. 2010 American LaFrance truck
16. 2011 American LaFrance truck

CEDAR CITY
CITY COUNCIL AGENDA ITEM 11
STAFF INFORMATION SHEET

To:	Mayor and City Council
From:	Jonathan Stathis
Council Meeting Date:	October 4, 2023
Subject:	**Consider a resolution revising the City Engineering Standards regarding sewer improvements.**
Discussion:	The City Sewer Collections Division has recommended several revisions to the City's Engineering Standards. These revisions are intended to improve the long-term operation and maintenance of the City's sewer system, thereby preventing unwanted sewer backups, odors, and premature failure of infrastructure. The proposed Engineering Standards revisions were presented at the Planning Commission meeting on August 29, 2023. The proposed revisions received a positive recommendation from the Planning Commission. The following pages of this information sheet include the following items: 1. A summary table that provides background information regarding the proposed revisions. 2. A resolution adopting the proposed revisions. 3. Redlined text of the Engineering Standards which shows the proposed revisions. 4. Redlined detail drawings which show the proposed revisions to the details. 5. Planning Commission minutes when this item was discussed at the August 29th meeting. Please consider whether to approve a resolution revising the City's engineering standards.

City Council Meeting on October 4, 2023
Sewer Collections Division – Engineering Standards Revisions
Revision Summary

Item #	Section/ Drawing Sheet	Description	Requested or Recommended By:	Cost Change
1	3.4.1	Delete text: "when full." This is a clarification based on another proposed change that the sewer lines need to be designed for the peak flow at half full.	Sewer	Depends on sewer line location.
2	3.4.1	Delete text: "(when flowing 2/3 full)." This is a clarification based on another proposed change that the sewer lines need to be designed for the peak flow at half full.	Sewer	Depends on sewer line location.
3	3.4.1	Add text: "All sewer shall be no more than ½ full when conveying the peak daily design flows for full buildout in accordance with City Master Plan." The current revision to the sewer master plan is being designed based on the sewer flowing ½ full at peak flow. This allows for capacity in the pipe for storm water infiltration during large storm events. Reference is Wastewater Collection Operators Manual Chapter 2, page 63.	Sewer	Depends on sewer line location.
4	3.4.1	Add a column in Table 3.3 to require a minimum number of dwellings at minimum slope. In order to provide a scour velocity of 2 ft/sec in the pipe, there needs to be a minimum number of dwellings feeding into the pipe. This will allow the pipe to be self-cleaning and prevent solids build-up in the pipe.	Engineering	Cost increase, if downstream lines need to be installed deeper.
5	3.4.1	Add text: "Minimum number of dwellings may be less if the line is shown on the City's Sewer Master Plan. The minimum number of dwellings shall be calculated based on the line's service area at full build-out according to the anticipated density based on the City's General Plan and/or Zoning (whichever is more dense)." This text provides clarification regarding how the minimum number of dwellings for each pipe size will be determined.	Engineering	Cost increase, if downstream lines need to be installed deeper.

6	3.4.1	Delete text: "No grades in excess of 15 percent will be allowed." Add text: "Grades in excess of 15 percent must be approved by the City Engineer." This will allow steeper grades. State regulations allow for slopes greater than 20% with proper anchoring.	Sewer	Cost decrease
7	3.4.1	Add text: "Sewer size shall NOT be increased in an attempt to decrease minimum slope." The intent of this change is to make sure that the minimum scour velocity of 2 ft/sec is met.	Sewer	Cost increase, if no other alternative is available.
8	3.4.2	Add text: "All pipe 12" in diameter and larger, and all pipe laid at minimum slope, shall use approved bedding material." This is for clarification regarding the pipe bedding and to make sure that all contractors are installing pipe the same.	Sewer	No change
9	3.4.2	Delete text: "unless no other alternative exists to provide gravity flow in the sewer main." Add text: "unless authorized by the City Sewer Collections Division." Rear-lot sewers would only be allowed when authorized by Sewer Collections. Rear-lot sewers cause problems for maintenance and increase the maintenance costs.	Sewer	Cost increase, if no other alternative
10	3.4.5	Add text: "Drop manholes shall NOT have the sewer pipe drop in the interior of the manhole, unless authorized by the City Sewer Collections Division." Drops inside manholes cause problems for maintenance.	Sewer	Cost increase, if additional trench depth is needed..
11	3.4.5	Add text: "and as fully accessible." This clarifies that floor troughs in manholes need to be fully accessible for maintenance.	Sewer	No change

12	3.4.5	Add text: "When a larger sewer main has a bend in a manhole shared with an additional smaller diameter line, special care shall be taken to ensure that the larger diameter sewer pipe has a large enough trough radius as to prevent any back-surge against the flow of the small diameter sewer line." This will require the contractor to take special care in constructing the manhole base. If the manhole troughs are not constructed properly, it can, and has, caused smaller lines to back up.	Sewer	Cost increase
13	3.4.5	Add text: "Sewer manholes shall use eccentric cones. Concentric cones are only permissible by approval of the City Sewer Collections Division. Vaulted style cones shall not be used." This is the standard installation in most cases. This language is just to clarify what is required for manholes.	Sewer	No change
14	3.4.6	Add text: "Construction of sewer lift stations shall NOT begin until a final set of plans has been approved by the City Engineering Department and the City Sewer Collections Division. Total cost to the City shall be disclosed and agreed upon PRIOR to construction. Additional costs associated with the building of the lift station shall be submitted in writing for approval by the City Sewer Collections Division PRIOR to construction." Recent problems have shown that this is necessary to make sure that all costs for the project for the project are known at the beginning of the project. If the City is going to participate in the upsizing of the lift station, then the City will need to agree to that cost up front before construction begins.	Sewer	No change

15	3.4.6.II.B.1	Delete text: "12' ". Add text: "16' wide road to all off site sewer lift stations." Add text: "6" thick of compacted, 3" minus pit run." Delete text: "compacted road base." Add text: "per City utility maintenance access roads Detail R5." These items are being added to clarify that off-site access roads to sewer lift stations need to meet the City's required off-site maintenance road detail.	Sewer	No change
16	3.4.6.II.B.2	Delete this paragraph. The information in this paragraph has been moved to the previous paragraph.	Sewer	No change
17	3.4.6.II.B.5	Add text: "All access roads shall turning radius sufficiently sized to allow access to 60' minimum emergency vehicles." This text is being added to clarify the minimum radius that is needed for the large sewer maintenance vehicles to be able to navigate the access road.	Sewer	No change

18	3.4.6.II.E.7	Add text: "Site plan and grading plan." This text is being added to clarify that a site plan and grading plan are required for the sewer lift station site. Delete text: "chain link fence." Add text: "block wall, per block wall Detail F1." These items are a change to require a 6-foot block wall around sewer lift stations. This provides for better security of the site. Add text: "6" thick of compacted, 3" minus pit run." This item clarifies that there needs to be a compacted surface inside the lift station to allow for large sewer maintenance vehicles to access the building. Delete text: "a SCADA system and panel with internet communications (fiber or broadband), and alarm notifications. Also included in the lift station design package shall be a design for the pressure discharge pipe (green or purple PVC C 900 DR 18) with thrust blocks, restraint joints, clean outs, blow offs, and in line gate valves spaced at 1000 feet maximum, pipe locate wire (12 gage solid copper with terminal boxes), locate posts, pressure line/manhole connection detail." These items have been moved to another section. Add text: "Gate shall be in line with wet-well access hatch for maintenance." This is being added to clarify that the access gate into the site needs to line up with the wet-well access hatch.	Sewer	Cost increase for 6' block wall.
19	3.4.6.III.F	Add text: "shall." This word is being added for clarification.	Sewer	No change
20	3.4.6.III.H	Add text: "with internet communications (fiber or broadband), and alarm notifications." This wording is being added for clarification. This wording was moved from a previous section.	Sewer	No change

21	3.4.6.III.I.2	Delete text: "each flooded suction pump." Add text: "any pumps installed below finished grade." Wording changed for clarification.	Sewer	No change
22	3.4.6.III.J.1	Delete text: "The wet well size and level control settings shall be appropriate to avoid heat buildup in the pump motor due to frequent starting (short cycling), and septic conditions due to excessive detention time, and shall be sized for a minimum 10 year peak flows, preferably 20 year peak flow requirements." Add text: "Wet wells shall be sized for 20-year peak flow requirements." 10 years has proven inadequate. Costs to the City to install outfall lines is far in excess of 10 years of economic receipts. 20 years is recommended by the current City standards and State regulations.	Sewer	Depends on location of lift station.
23	3.4.6.III.J.5	Add text: "All future piping, valves and equipment shall be installed in wet well so as to eliminate any future work requiring damage to epoxy coating and the need to work in a live wet well." This will save future development costs of having to re-spray the wet well after growth occurs.	Sewer	Cost increase now. Cost decrease for future development.
24	3.4.6.III.J.7	Add text: "shall be constructed of stainless steel." Delete text: "All mounting hardware including, but not limited to, bolts, anchors, brackets, and hangers will be stainless steel." Add text: "Multiple access doors may be required for larger wet wells. A separate access hatch shall be installed above all gravity pipe inlets." Proper maintenance access needs to be provided.	Sewer	Cost increase
25	3.4.6.III.J.8	Add text: "All mounting hardware including, but not limited to, bolts, anchors, brackets and hangers will be stainless steel." Wording added for clarification.	Sewer	No change

26	3.4.6.III.K.2	Add text: "Wet wells must have ventilation that prevents a vacuum situation inside wet well." Wording added for clarification. This is a requirement from the Gorman-Rupp pump company.	Sewer	No change.
27	3.4.6.III.K.3	Add text: "Fresh air intake shall be ducted into sublevel from roof and exhausted above main level and away from fresh air intake so as to minimize the levels of heavy gasses such as H2S. Wall louvers shall NOT be permitted." Wording added for clarification of venting requirements.	Sewer	No change
28	3.4.6.V.G	Add text: "Generator operation and alarming shall be compatible with and connected to City SCADA." Wording added for clarification.	Sewer	No change
29	3.4.6.VII.D	Add text: "At the location where a pressure force main terminates, the following manholes must be corrosion resistant, Armor Rock (Pre-cast) or Sprayroq (Field-applied), or approved equal. i. The manhole where the force main terminates. ii. the upstream manhole from where the force main terminates; and iii. the downstream manhole from the force main terminates." This is being added due to problems with H2S gasses that build-up in areas where pressure force mains enter the gravity sewer system.	Sewer	Cost increase
30	3.4.6.VII.F.1	Spelling correction: "hydraulic." Spelling correction: "steel."	Sewer	No change
31	3.4.6.VII.J	Add text: "As-built detail to be provided for pressure discharge pipe (green or purple PVC C-900 DR-18) with thrust blocks, restraint joints, clean-outs, blow-offs, and in-line gate valves spaced at 1000 feet maximum, pipe locate wire (12-gage solid copper with terminal boxes), locate posts, pressure line/manhole connection." Wording added for clarification.	Sewer	No change

32	Detail S1	Note 10 added. The intent of this change is to make sure that the minimum scour velocity of 2 ft/sec is met.	Sewer	Cost increase, if no other alternative is available.
33	Detail S2	Notes added regarding trough openings. Notes added regarding manhole lining at pressure main locations.	Sewer	No change Cost increase
34	Detail S3	Drop inside manhole has been removed.	Sewer	Cost increase, if additional trench depth is needed.
35	Detail S5	Pipe alignment changed to be straight into wet-well.	Sewer	No change.
36	Detail S9	Plug for future sewer extension changed to a removable gate.	Sewer	Cost increase
37	Detail R5	Note added to require 6 inches of compacted road base on top of the pit run.	Sewer	Cost increase

CEDAR CITY RESOLUTION NO. _____
A RESOLUTION AMENDING THE CITY's ENGINEERING STANDARDS

WHEREAS, beginning in 1995 the City adopted engineering standards for all work to be located within the public streets, rights-of-way, and easements within the City; and

WHEREAS, these engineering standards also contain specifications for infrastructure items that are connected to or impact the City's facilities; and

WHEREAS, from time to time the engineering standards have been updated or modified; and

WHEREAS, attached hereto and incorporated herein as exhibit A there are a set of proposed amendments to the City's engineering standards regarding sewer design; and

WHEREAS, the proposed amendments have been reviewed and received a positive recommendation from the City's Planning Commission.

NOW THEREFORE be it resolved by the City Council of Cedar City, Iron County, State of Utah, that the amendments to the City's engineering standards contained in Exhibit A are hereby adopted. This resolution shall take effect immediately upon passage.

Council Vote:

Hartley -
Isom -
Phillips -
Melling -
Riddle –

Dated this ___ day of October, 2023.

_____
GARTH O. GREEN
MAYOR

[SEAL]
ATTEST:

_____
RENON SAVAGE
RECORDER

EXHIBIT A

Resolution No. _____

amendments to the City's engineering standards

3.4 SANITARY SEWER DESIGN.

3.4.1 DESIGN FLOWS. All sanitary sewers and appurtenances shall be designed to carry the design flows from all contiguous areas that may be tributary thereto. Studies may be required to determine sewer design flow and adequate gravity and pressure sewer infrastructure sizes.

Sanitary sewers shall be designed to carry the peak discharge as specified below; also, all sewers shall be designed to transport suspended material so as to preclude the deposition of any solids in the sewer line.

New sewer systems shall be designed on the basis of an average daily per capita flow. Sanitary sewer systems shall be designed to prohibit infiltration and ex-filtration. To provide for peak loads, sanitary sewers shall be designed to carry~~, when full,~~ not less than that shown in table 3.2.

TABLE 3.2
SANITARY SEWER DESIGN FLOWS

Laterals and Mains (< 15" diameter)	400 gallons/capita/day
Outfall Lines (≥ 15" diameter).	250 gallons/capita/day

All sewers shall be designed and constructed with hydraulic slopes sufficient to give mean velocities ~~(when flowing 2/3 full)~~ of not less than 2.0 feet per second, based on Manning's formula, using a value for "n" of not less than 0.013. The minimum slopes to be provided shall be as shown in table 3.3, unless approved otherwise by the City Engineer. All sewer shall be no more than 1/2 full when conveying the peak daily design flows for full buildout in accordance with City Master Plan.

TABLE 3.3
SANITARY SEWER MINIMUM SLOPES

SEWER SIZE (Inches)	MINIMUM SLOPE (ft/100 feet)	MAXIMUM NUMBER OF DWELLINGS	MINIMUM NUMBER OF DWELLINGS ALLOWED AT MINIMUM SLOPE
4	1.00	3	1
6	0.60	10	1
8	0.50	300	1
10	0.40	500	150
12	0.35	750	190
15	0.30	1200	245
18	0.25	1900	330
21	0.20	2600	455
>24	0.15	3200	680

NOTE: Maximum dwelling units for four and six inch pipe sized for service laterals, eight inch and above sized for sewer main. Minimum number of dwellings may be less if the line is shown on the City's Sewer Master Plan. The minimum number of dwellings shall be calculated based on the line's service area at full build-out according to the anticipated density based on the City's General Plan and/or Zoning (whichever is more dense).

The Engineer must furnish computations for velocities and depth of flow for grades in excess of 10% and for extremely low flow situations. ~~No grades in excess of 15 percent will be allowed.~~ Grades in excess of 15 percent must be approved by the City Engineer. Sewer size shall NOT be increased in an attempt to decrease minimum slope.

3.4.2 MINIMUM SIZE AND DEPTH. No public sanitary sewer shall be less than eight inches in diameter. Minimum size of house connections shall be four-inches in diameter. Minimum size of restaurant connections shall be six-inches in diameter. Only one residence, structure, or building in separate ownership shall be served by each lateral connected to the public main. (See Uniform Plumbing Code, Chapter 3)

In general, sanitary sewers shall be designed to a depth of 9 feet to the pipe invert to permit sewer laterals from basements to be connected. Exceptions may be granted in subdivisions or areas in which basement-less buildings are to be constructed. In such case a note to that effect shall be made on all plans presented for approval. In no case shall sanitary sewers be designed for a depth of cover less than 36 inches over the top of the sewer pipe. All sewers shall be designed to prevent damage from superimposed loads as well as trench loading conditions.

All pipe 12" in diameter and larger, and all pipe laid at minimum slope, shall use approved bedding material.

3.4.3 ALIGNMENT. In general, all sanitary sewers shall be designed for uniform slope and alignment between manholes and shall be laid a distance of at least 10 feet (horizontally) from any existing or proposed water main. In the event that a sewer main cannot be laid at least 10 feet from an existing or proposed water main, then the City Engineer may authorize the implementation of the provisions of section 12.2.1 of the State of Utah Public Drinking Water Regulations. Sewer mains and manholes shall be located in improved dedicated City streets. City owned sewer mains and manholes shall not be permitted on private property or behind homes. ~~unless no other alternative exists to provide gravity flow in the sewer main~~. unless authorized by the City Sewer Collections Division. The inability to provide gravity flow from the home shall not be a justification for the sewer mains not being located in the street. Sewer mains not located in improved dedicated City streets shall have a utility maintenance access road installed per the standard drawings.
All Sewer laterals shall intersect the sewer main on the top third of the sewer main pipe as shown in the standard drawings and extend perpendicular from the sewer main pipe to the lot.

3.4.4 SERVICE CONNECTIONS. Service connections to any public sanitary sewer shall be made only to a wye installed at the time of the sewer main installation or by a machine tap and approved saddle wye or "insert-a tee" compatible with existing main line sewer material in accordance with the standard drawings and shall be a minimum of 10 feet, measured horizontally, from any culinary water line or tapping. All connections and service lines must

be watertight. All sewer clean-outs shall be made according to the standard drawings. New subdivisions shall install a sewer lateral per the standard drawings on the main sewer for each proposed lot. The lateral shall be located 10 feet from the low lot line.

All sewer laterals connected to public sewer mains shall conform to table 3.4.

All restaurants, food service establishments and other buildings that use high amounts of grease or oil shall have grease, oil, and sand interceptors with sampling manhole as specified in Section 3.4.7.

TABLE 3.4
SANITARY SEWER LATERALS

TYPE OF UNIT OR RESIDENCE	MINIMUM SEWER LATERAL SIZE (Diameter)	MINIMUM SLOPE
Single Family Residences	4 inches	2%
Town-homes	4 inches/unit	2%
Commercial Establishments	6 inches	1%
Mobile Homes	4 inches	2%
Apartments/Multi-Family Condominium Complexes	See notes below	

NOTES:

1) Lateral size and slope shall be based on the number of fixture units in the apartment or multi-family condominium complexes, in accordance with the Uniform Plumbing Code.
2) Under no circumstances shall roof drains, foundation drains, storm drains or sub-drains be connected to the sanitary sewer system.

3.4.5 SEWER MANHOLES AND GREASE TRAPS WITH SAMPLING MANHOLES. Manholes shall be installed at all changes in grade, direction, size, or at all intersections; and at distances no greater than 400 feet apart for main lines and 500' apart for outfall lines. All manholes shall be accessible to maintenance vehicles, and all sewer easements shall provide at least 20 feet of unobstructed width. Drop manholes shall be provided for a sewer line entering a manhole at an elevation of 18-inches or more above the manhole invert. Drop-manholes shall NOT have sewer pipe drop in the interior of the maintenance manhole. Floor troughs shall be furnished for all sewers entering manholes, and shall be at least as deep and as fully accessible as the full diameter of the sewer main in the manhole.

When a smaller sewer main joins a larger sewer main in a manhole, the top of pipe elevations shall match. When a larger sewer main has a bend in a manhole shared with an additional, smaller diameter line, special care shall be taken to ensure that the larger diameter

sewer pipe has a large enough trough radial as to prevent any back-surge against the flow of the smaller diameter sewer line.

All manholes shall conform to the detailed dimensions, construction details and materials as shown in the standard drawings. Manholes shall also conform to the conditions as detailed in Section 3, of these standards.

Sewer manholes for all sewer mains of 12 inches or less in diameter shall be a minimum of four feet in inside diameter. For sewer mains larger than 12 inches in diameter or over 12 feet in depth, or for three or more 8" or greater sewer lines flowing into a manhole, the manholes shall be not less than five feet in inside diameter.

Sewer manholes shall use eccentric cones. Concentric cones are only permissible by approval of Wastewater Collections. Vaulted style cones shall not be used.

3.4.6 SEWER LIFT STATIONS Normally all City sanitary sewer mains shall be gravity flow type. Sewer lift stations shall only be permitted and designed in accordance to local, state, and federal requirements, including City adopted fire code, building code, electric code, and State Administrative Code R317-3-3. Additionally, the following criteria and design standards shall be met. Where there is a conflict, the more stringent requirement shall apply. Construction of sewer lift stations shall NOT begin until a final set of plans has been approved by City Engineering and Wastewater Collections Departments. Total cost to City shall be disclosed and agreed upon PRIOR to construction. Additional costs associated with the building of the lift station shall be submitted in writing for approval by Wastewater Collections PRIOR to construction.

I. General

A. Lift stations are allowed when a gravity flow sewer main would have a depth in excess of 25 feet for 10% or more of the sewer main length or the gravity flow sewer main would be longer than 300 feet multiplied by the potential number of sewer connections served by the sewer main.

B. Sewer lift station structures, electrical and mechanical equipment shall be protected from physical damage that would be caused by a 100-year flood. Sewage pumping stations must remain fully operational and accessible during a 25-year flood.

C. Minimum duplex pump configuration shall be used in either a self-priming (Gormann-Rupp or approved equal) or dry horizontal flooded suction (Flygt, Vaughan Chopper, or approved equal) option.

D. Where lift stations are not on the city's Sewer Master Plan, the lift station shall be designed to ultimately be eliminated and connected to future gravity flow sewer.

E. New lift station proposals shall include a cost comparison analysis of the benefits of an added lift station over the installation of gravity sewer line.

F. Minimum capacity of lift stations shall be sufficient to serve 400 D.U. or a minimum of 160 acres of residential or commercial property whichever is the greater flow rate.

G. Lift stations with capacity greater than 1 million gallons per day require state

review and approval prior to construction permit.

II. Design

A. System Design Study Report

1. Provide pump and wet well design for the potential area served with a discharge pipe designed for a minimum flow velocity greater than two (2) feet per second and a maximum velocity less than five (5) feet per second.

2. The design engineer shall submit system-head calculations and curves. System-head curves for C values of 100, 120 and 140 in the Hazen William's equation for calculating head loss corresponding to minimum, median and maximum water levels shall be developed.

3. A system-head curve for C value of 120 corresponding to median (normal operating) water level shall be used to make preliminary selection of motor and pump. The pump and motor must operate satisfactorily over the entire range of system-head curves for C values of 100 and 140 corresponding to minimum and maximum water levels intersected by the head-discharge relationship of a given pump.

4. The system shall be designed and constructed for peak flow at full buildout. If more than 2 pumps are required for full buildout, phased construction may be permitted with development. Future pumps shall be triggered by pre-determined Equivalent Domestic Unit limits analyzed in an approved sewer study.

B. Accessibility

1. The lift station shall be readily accessible by maintenance vehicles during all weather conditions which shall include a minimum ~~12'~~ 16' wide road to all off site sewer lift stations. Dirt access roads shall have a minimum finish grade of 6" thick of compacted, 3" minus pit run. ~~compacted road base~~. Dirt access roads shall be crowned at the center line of right-of-way and 2% slope away from crown per city utility maintenance access roads detail R5.

~~2. Dirt access roads shall have a minimum finish grade of 6" thick, compacted, 3" compacted road base. Dirt access roads shall be crowned at the center line of right-of-way and 2% slope away from crown.~~

3. The facilities shall be located off the traffic way of streets and alleys. Lift station facilities shall have a clearance area no less than 20' from exterior of any building, wet well, valve pit, etc.

4. Access gate shall be a minimum of 16' in width, and in line with wet-well manhole/grate, to provide access to specialty cleaning/maintenance vehicles.

5. All access roads shall have turning radius' sufficiently sized to allow access to 60' minimum emergency vehicles.

C. Grit: Where it is necessary to pump sewage before grit removal, the design of the wet well and pump station piping shall be such that operational problems from the accumulation of grit are avoided.

D. Odor and Corrosion Control: The pumping station design should incorporate measures for mitigating the effects of sulfide corrosion to structure and equipment; and excessive odor control when a populated area is within close

proximity.

E. Structures

1. Pump and motor enclosures and facilities, including their superstructure, shall be completely separated from the wet well.

2. Provision shall be made to facilitate maintenance and removal of pumps, motors, and other mechanical and electrical equipment including, but not limited to, 3' of clearance around any interior wall and/or wall mounted equipment in excess of control panel door's opening tolerances, and 7' minimum height for all overhead conduits, piping, gas lines and any other obstructions.

3. Safe means of access and proper ventilation shall be provided to all facilities and wells containing mechanical equipment requiring inspection or maintenance.

   a. For recessed dry wells, a stairway with rest landings shall be provided at vertical intervals not to exceed 12 feet (3.7 meters). Where a landing is used, a suitable and rigidly fixed barrier shall be provided to prevent an individual from falling past the intermediate landing to a lower level.

   b. Where space requirements are insufficient; the design may provide for a man-lift or elevator in lieu of landings in a factory-built station if the design includes an emergency access or exit and shall not be classified as "confined space".

4. The materials selected in construction and installation must be safe and able to withstand adverse operating environmental conditions caused by presence of hydrogen sulfide and other corrosive gases, greases, oils, and other constituents frequently present in sewage.

5. Lift stations shall have walk-in pump enclosures with masonry walls, metal roof, interior/exterior lights, heat, vent fans, 15-gallon trash can, storage cabinet, wash down sink, faucet and floor drain (or submersible pump, if required), dry well water spigot (hose bib), 120 volt electrical outlets and service water per building code.

6. No wet well shall be deeper than 25' below finish grade, and shall be accessible via City maintenance and cleaning equipment.

7. Site plan and grading plan per Standard Drawing S7 showing fenced yard with 6-foot ~~chain link fence~~ block wall, per block wall detail F1, 16-foot gate, 6" thick of compacted, 3" minus pit run, 6" 3-inch drain rock ground cover, sloped at 2% from wet well to the fence, set-backs per zoning ordinance, 20-foot minimum from the fence to the enclosure and/or lift station equipment. ~~a SCADA system and panel with internet communications (fiber or broadband), and alarm notifications. Also included in the lift station design package shall be a design for the pressure discharge pipe (green or purple PVC C-900 DR-18) with thrust blocks, restraint joints, clean-outs, blow-offs, and in-line gate valves spaced at 1000 feet maximum, pipe locate wire (12-gage solid copper with terminal boxes), locate posts, pressure line/manhole connection detail.~~ Gate shall be in line with wet-well access hatch for maintenance. All installation and testing shall comply with the requirements of the equipment manufacture and City Engineering Standards. Refer to Standard Drawings S5 for additional

requirements and specifications for sewer lift stations.

III. Pumps

A. Multiple Units

1. A minimum of two pumps shall be provided for all sewer lift stations and shall have the same capacity. Each shall be capable of handling flows in excess of the expected maximum flow.
2. A minimum of three pumps shall be provided for lift stations where design peak-flows will be 1 million gallons per day (3,785 cubic meters per day) or greater. Where three or more units are provided, they shall be designed to fit actual flow conditions and must be of such capacity that with any one of the units out of service, the remaining units shall have capacity to handle flows in excess of the expected maximum flow.
3. All pumps shall be 480 volt, 3-phase with auxiliary power connections and gas driven stand by generators or motors. See emergency operations for additional information.

B. Protection Against Clogging

1. All lift station designs shall take precaution to provide protection against clogging.
2. Non-mechanically cleaned bar screens will NOT be acceptable.
3. Mechanically cleaned and duplicate bar screens or grinders shall be installed in lift stations handling estimated peak flows of 1 million gallons per day or greater.
4. For lift stations less than 1 million gallons per day, grinders may be considered, at the discretion of the Wastewater Collections Department Head.

C. Pump Openings: Except where grinder pumps are used, pumps shall be capable of passing spheres of at least 3 inches (7.6 centimeters) in diameter, and pump suction and discharge piping shall be at least 4 inches (10.2 centimeters) in diameter.

D. Priming: The pump shall be so placed that it will operate under a positive suction head under normal operating conditions.

E. Electrical Equipment: Electrical systems and components (e.g., motors, lights, cables, conduits, switchboxes, and control circuits) in raw sewage wet wells, or in enclosed or partially enclosed spaces where hazardous concentrations of flammable gases or vapors may be present, shall comply with the National Electrical Code requirements for Class 1 Group D, Division 1 locations. In addition, equipment located in the wet well shall be suitable for use under corrosive conditions. Each flexible cable shall be provided with watertight seal and separate strain relief. A fused disconnect switch located above ground shall be provided for all pumping stations. When such equipment is exposed to weather, it shall as a minimum, meet the requirements of weatherproof equipment (NEMA 3R). All electrical equipment and clearance requirements shall comply with latest National Electrical Code standards.

F. Intake: Each pump shall have an individual intake. Turbulence shall be avoided near the intake in wet wells. Intake piping shall be as straight and short as possible.

G. Dry Well Dewatering: A separate sump pump equipped with dual check valves shall be provided in dry wells to remove leakage or drainage. Discharge shall be located as high as possible. A connection to the pump suction is also recommended as an auxiliary feature. Water ejectors connected to a potable water supply will not be approved. All floor and walkway surfaces should have an adequate slope to a point of drainage. Pump seal water shall be piped to the sump.

H. Controls

1. Controls and alarms shall be compatible with City proprietary SCADA system with internet communications (fiber or broadband), and alarm notifications. SCADA control panels shall be wall mounted per specification requirements and accessible, including 3' minimum clearance.
2. MODBUS controls shall be provided in pump panels.
3. Control systems for liquid level monitoring shall be of the air bubbler type or level transducer type, and shall also include a single, high level, fail-safe float. All electrical equipment shall comply with all National Electrical Code requirements.
4. The level control system shall be located away from the turbulence of incoming flow and pump suction.
5. The design engineer must consider automatic alternation of the sequencing of pumps in use.
6. Incoming power from the main feed shall have a power meter sensor.

I. Valves

1. Check valves shall be placed on the suction line of each self-priming pump.
2. Isolation valves shall be placed on the suction line of ~~each flooded suction pump.~~ any pumps installed below finished grade.
3. Discharge Line
   a. Isolation and check valves shall be placed on the discharge line of each pump. The check valve shall be located between the isolation valve and the pump.
   b. Check valves shall not be placed in the vertical run of discharge lines after the primary isolation valve.
   c. Within the building or fenced perimeter, and after the isolation valve shall be a force main shut off valve.
   d. All valves shall be suitable for the material being handled, and capable of withstanding normal operating pressure and water hammer.
   e. Where limited pump backspin will not damage the pump and low discharge head conditions exist, a short individual force main for each pump, may be approved by the Wastewater Collections Department Head in lieu of a discharge manifold.

J. Wet Wells

1. Size. ~~The wet well size and level control settings shall be appropriate to avoid heat buildup in the pump motor due to frequent starting (short cycling), and septic conditions due to excessive detention time, and shall be sized for a minimum 10-year peak flows, preferably 20 year peak flow requirements.~~ Wet wells shall be sized for 20-year

peak flow requirements.

2. Floor Slope. The wet well floor shall have a minimum slope of one to one to the hopper bottom. The horizontal area of the hopper bottom shall be not greater than necessary for proper installation and function of the pump inlet.
3. Discharge lines shall NOT pass through wet wells.
4. Wet wells shall be of non-corrosive construction (Armorock or equal), or spray lined with chemical-resistant polyurethane coatings (Sprayroq or equal), and finished before placed into service.
5. All future piping, valves and equipment shall be installed in wet well so as to eliminate any future work requiring damage to epoxy coating and the need to work in a live wet well.
6. Wet well design shall provide sufficient storage capacity to allow for detection of and response to lift station failure.
7. Access to wet well will be a dual hatch door with safety grates. Material ~~will~~ shall be constructed of stainless steel. ~~All mounting hardware including, but not limited to, bolts, anchors, brackets and hangers will be stainless steel.~~ Multiple access doors may be required for larger wet wells. A separate access hatch shall be installed above all gravity pipe inlets.
8. All mounting hardware including, but not limited to, bolts, anchors, brackets and hangers will be stainless steel.

K. Ventilation

1. All pump stations must be ventilated to maintain a safe operating environment. Where the pump pit is below the ground surface, mechanical ventilation is required, so arranged as to independently ventilate the dry well and the wet well if screens or mechanical equipment requiring maintenance or inspection are located in the wet well. There shall be no interconnection between the wet well and dry well ventilation systems. In pits over 15 feet (4.6 meters) deep, multiple inlets and outlets are recommended. Dampers should not be used on exhaust or fresh air ducts. Fine screens or other obstructions in air ducts should be avoided to prevent clogging. Switches for operation of ventilation equipment should be marked and located for convenient operation from outside of the enclosed environment. All intermittently operated ventilating equipment shall be interconnected with the respective pit lighting system. Automatic controls are recommended for intermittently ventilated pump stations. Fan parts should be of non-corrosive material. All parts adjacent to moving ones should be of non-sparking materials. Consideration should be given to installation of automatic heating and dehumidification equipment.
2. Wet Wells. Wet wells must have ventilation that prevents a vacuum situation inside wet well. Ventilation may be either continuous or intermittent. Ventilation, if continuous, shall provide at least 12 complete air changes per hour; if intermittent, at least 30 complete air changes per hour. Ventilating equipment should force air into wet well rather than exhaust it from wet well.
3. Dry Wells. Ventilation may be either continuous or intermittent.

Ventilation, if continuous, shall provide at least 6 complete air changes per hour; if intermittent, at least 30 complete air changes per hour. Fresh air intake shall be ducted into sublevel from roof and exhausted above main level and away from fresh air intake so as to minimize the levels of heavy gases such as H2S. Wall louvers shall NOT be permitted.

L. Flow Measurement. Continuous measuring and recording of sewage flow shall be provided at all pumping stations with a design pumping capacity greater than one million gallons per day (3,785 cubic meters per day).

M. Water Supply. There shall be no physical connection between any potable water supply and a sewage pumping station which under any condition might cause contamination of the potable water supply. The potable water supply to a pumping station shall be protected against cross connection or backflow.

N. Self-priming pumps shall be capable of rapid priming and repriming at the lead pump on elevation. Such self-priming and repriming shall be accomplished automatically under design operating conditions. Suction piping should not exceed the size of the pump suction and shall not exceed 25 feet (7.6 meters) in total length. Priming lift at the lead pump on elevation shall include a safety factor of at least 4 feet (1.2 meters) from the maximum allowable priming lift for the specific equipment at design operating conditions. The combined total of dynamic suction lift at the pump off elevation and required net positive suction head at design operating conditions shall not exceed 22 feet (6.7 meters).

IV. Alarm Systems

A. Alarm systems shall be provided for lift stations. The alarm shall be activated in cases of power failure, high water level in dry or wet well, pump failure, use of the lag pump, air compressor failure, or any other pump malfunction.

B. Lift station alarm systems shall be compatible with current SCADA program in use by Cedar City Wastewater Collections.

V. Emergency Operation

A. Pumping stations and collection systems shall be designed to prevent bypassing of raw sewage and backup into the sewer system. For use during possible periods of extensive power outages, mandatory power reductions, or uncontrolled storm events, a controlled emergency power generator shall be provided.

B. The generator shall have auto-start and fueled by natural gas, supplied by a utility line coming into the site. The generator shall be rated to provide sufficient output power to run all pumps, ventilation, lighting, and auxiliary loads continuously. If a stand-alone external generator is used, it must be in an appropriate, weather rated enclosure.

C. Engine Protection. The engine must be protected from damaging operating conditions. Protective equipment shall shut down the engine and activating an alarm. Protective equipment shall monitor for conditions of low oil pressure and overheating, Oil pressure monitoring is not required for engines with splash lubrication.

D. Engine Ventilation. The engine shall be located above grade with adequate ventilation of fuel vapors and exhaust gases.

E. Routine Start-up. All emergency equipment shall be provided with instructions indicating the need for regular starting and running of such units at full loads.

F. Protection of Equipment. Emergency equipment shall be protected from damage at the restoration of regular electrical power.

G. Generator operation and alarming shall be compatible with and connected to City SCADA.

VI. Instructions and Equipment

A. Sewage pumping stations and their operators must be supplied with a complete set of operational instructions, including emergency procedures, maintenance schedules, special tools, and necessary spare parts.

VII. Force Main

A. Velocity. A velocity of not less than 2 feet per second (0.61 meter per second) shall be maintained at the average design flow, to avoid septic sewage and resulting odors.

B. Air Relief Valve. An automatic air relief valve may be requested at high points in the force main to prevent air locking.

C. Termination. Force mains should enter the gravity sewer system at a point not more than 2 feet (30 centimeters) above the flow line of the receiving manhole.

D. At the location where a pressure force main terminates, the following manholes must be corrosion resistant, Armor Rock (Pre-cast) or Sprayroq (Field-applied), or approved equal.

i. The manhole where the force main terminates;

ii. the upstream manhole from where the force main terminates; and

iii. the downstream manhole from where the force main terminates.

E. Design Pressure. The force main and fittings, including reaction blocking, shall be designed to withstand normal pressure and pressure surges (water hammer).

F. Special Construction. Force main construction near streams or used for aerial crossings shall meet all National and State code requirements.

G. Design Friction Losses

1. Friction losses through force mains shall be based on the Hazen-Williams formula or other hydraulic analysis that may be justified to determine friction losses. When the Hazen-Williams formula is used, the design shall be based on the value of C equal to 120; for unlined iron or steel pipe, the value of C equal to 100 shall be used.

2. When initially installed, force mains will have a significantly higher C factor. A changing C factor over the life of the system must be considered when calculating friction loss, capacity, and power requirements.

H. Separation from Water Main. The applicant or the design engineer

must review the requirements stated in State Code R309-112.2 - Distribution System rules, Drinking Water and Sanitation Rules, to assure compliance.

I. Identification. A clearly labeled tracer location tape shall be placed two feet above the top of force mains along its entire length.

J. As-built detail to be provided for pressure discharge pipe (green or purple PVC C-900 DR-18) with thrust blocks, restraint joints, clean-outs, blow-offs, and in-line gate valves spaced at 1000 feet maximum, pipe locate wire (12-gage solid copper with terminal boxes), locate posts, pressure line/manhole connection.

3.4.7 GREASE, OIL, AND SAND INTERCEPTOR WITH SAMPLING MANHOLE. Grease, Oil, and Sand Interceptors, shall mean a device for separating and retaining waterborne fats, oil, and greases before the wastewater exits the interceptor into the city's wastewater collection system or POTW. The interceptor also collects settable solids generated by or incidental to commercial, industrial and/or food preparation activities. The calculations for future grease interceptor capacity will be based on available tenant space, and/or flow through retention time. The Interceptor shall at a minimum be equipped with a two-cell construction and be constructed of impervious materials capable of withstanding abrupt and extreme changes in temperature. All grease, oil and sand interceptors shall conform to detailed dimensions, construction details and materials as shown in the standard drawings, and the Cedar City Pretreatment Ordinance 30-a.

A sampling manhole shall also be installed with each grease, oil and sand interceptor. The sampling manhole shall conform to the engineering standards and standard drawings for sewer manholes as contained here-in.

h (28 days)	150 PSI	
Minimum fly ash per cubic yard		300 lbs.
Maximum cement per cubic yard		50 lbs.
Maximum slump		10 in.

VI. PIPELINE CASINGS: Pipeline casings shall conform to the following:

A. Casing Material – The casing material shall be smooth, uncoated carbon steel casing pipe with a minimum yield strength of 35,000 PSI and a minimum wall thickness of 0.375 inches.

B. Casing Size – The casing size shall be sufficient to maintain a 2 inch minimum clearance between the greatest outside diameter of the carrier pipe (including pipe bells) and the minimum interior diameter of the casing pipe. Minimum clearance shall be maintained around the entire pipe circumference.

C. Casing Chocks or Skids- Casing chocks or skids shall be Power Seal 4810 casing chocks or equal approved by the City Engineer. Casing chocks or skids shall support the carrier pipe at a maximum of every 7 feet and install according to the manufactures directions.

D. Casing Seals- The annulus between the carrier pipe and casing on both v ends of the pipe casing shall be sealed with a neoprene boot and stainless steel straps provided by Power Seal or equal approved by the City Engineer.

E. Carrier Pipe Joints- The joints of the carrier pipe inside the case shall be joints that resist slipping by using either locking gaskets, glued or other non-slip type joints approved by the City Engineer.

VII. SPARE COMMUNICATION CONDUITS- A minimum of one 2-inch gray, Schedule 40 PVC conduit with a nylon twin pull string with 500 pounds of pull strength shall be installed at least in one of the City sewer, storm drain or water line trenches required for any development.

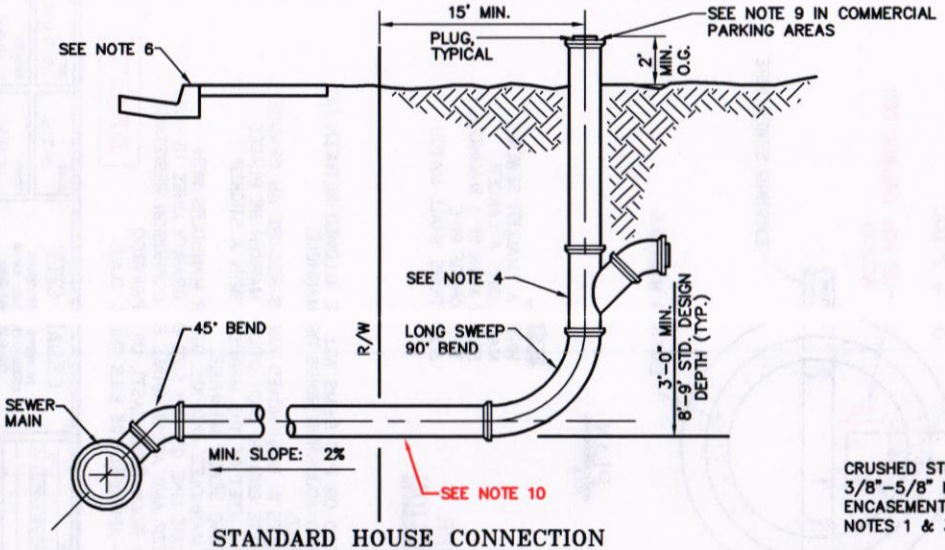

STANDARD HOUSE CONNECTION

N.T.S.

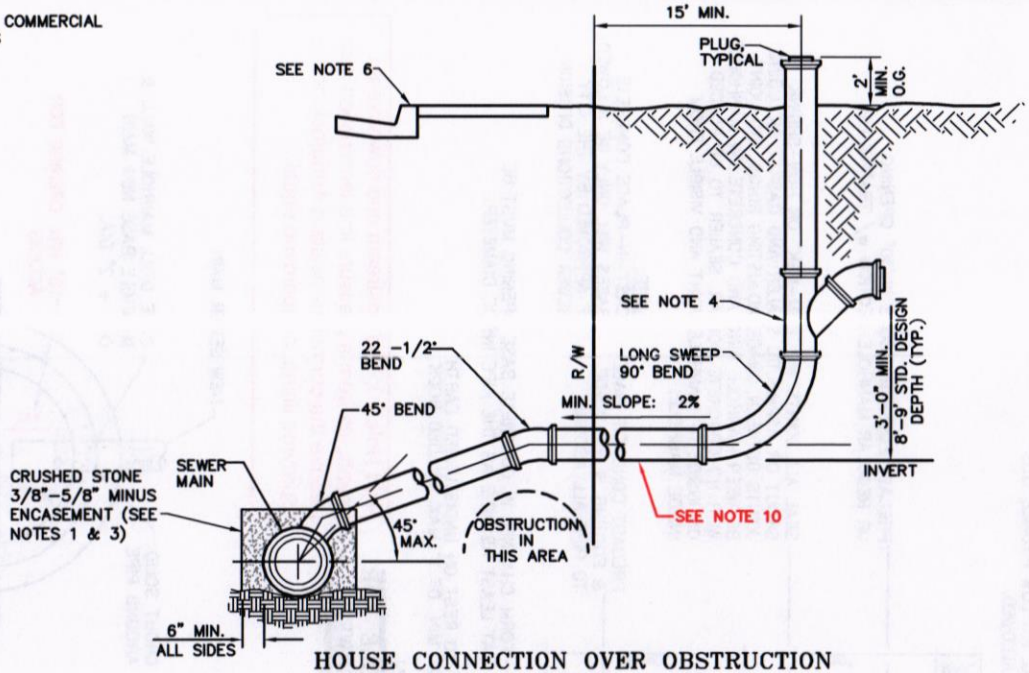

HOUSE CONNECTION OVER OBSTRUCTION (UPON APPROVAL ONLY)

N.T.S.

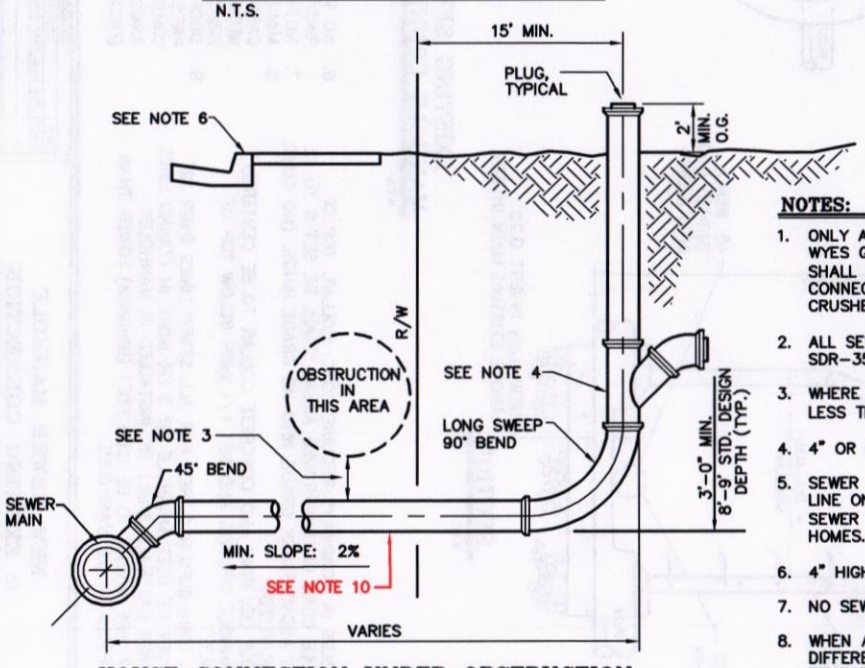

HOUSE CONNECTION UNDER OBSTRUCTION (UPON APPROVAL ONLY)

N.T.S.

NOTES:

1. ONLY APPROVED INSERTABLE TEES w/ RUBBER GROMMET SEAL OR PVC SADDLE WYES GLUED & STRAPPED TO EXISTING PVC MAINS ALLOWED. INSERTABLE TEES SHALL NOT BE USED IN PIPE LESS THAN 12" DIAMETER. SADDLE WYES CONNECTING TO VITRIFIED CLAY SEWER PIPE MAIN MUST BE ENCASED IN CRUSHED STONE AS SHOWN.
2. ALL SEWER LATERALS TO BE ABS OR PVC 4" OR 6" DIAMETER MATERIAL SDR-35.
3. WHERE CLEARANCE BETWEEN BOTTOM OF OBSTRUCTION AND TOP OF LATERAL IS LESS THAN 12", ENCASE LATERAL IN CRUSHED STONE.
4. 4" OR 6" PVC WYE INSTALLED BY BUILDING PLUMBER AT REQUIRED ELEVATIONS.
5. SEWER LATERALS SHALL NORMALLY BE PLACED 10 FEET INSIDE THE SIDE LOT LINE ON THE SIDE WHERE THE SEWER MAIN IS THE LOWEST. ON TWIN HOME LOTS SEWER LATERAL SHALL BE PLACED 1' ON EACH SIDE OF THE LINE DIVIDING THE HOMES.
6. 4" HIGH LETTER "S" ETCHED IN CONCRETE CURB ABOVE SEWER LATERAL.
7. NO SEWER LATERALS SHALL BE CONNECTED DIRECTLY TO SEWER MANHOLES.
8. WHEN A NEW SEWER LATERAL REPLACES AN EXISTING SEWER LATERAL AT A DIFFERENT LOCATION ON THE SEWER MAIN, THE EXISTING SEWER LATERAL SHALL BE CAPPED AT THE SEWER MAIN.
9. SEWER LATERALS IN COMMERCIAL PARKING LOTS REQUIRE A COLLAR AROUND THE CLEAN-OUT CAP SIMILAR TO WATER VALVE BOX COLLARS PER DETAIL W1.
10. PIPE DIAMETER SHALL NOT BE INCREASED IN AN ATTEMPT TO DECREASE MINIMUM SLOPE.

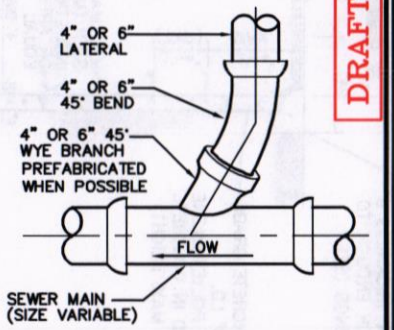

STANDARD WYE

N.T.S.

DRAFT

DATE: 6/2023	CHECKED: J.A.S.
SCALE: N.T.S.	DRAWN: T.B.M.

CEDAR CITY
10 NORTH MAIN STREET
CEDAR CITY, UTAH 84720
PH. (435) 586-2963

REVISIONS		
DATE	DESCRIPTION	BY

SEWER LATERAL

SHEET NO. S1

FILE: S01

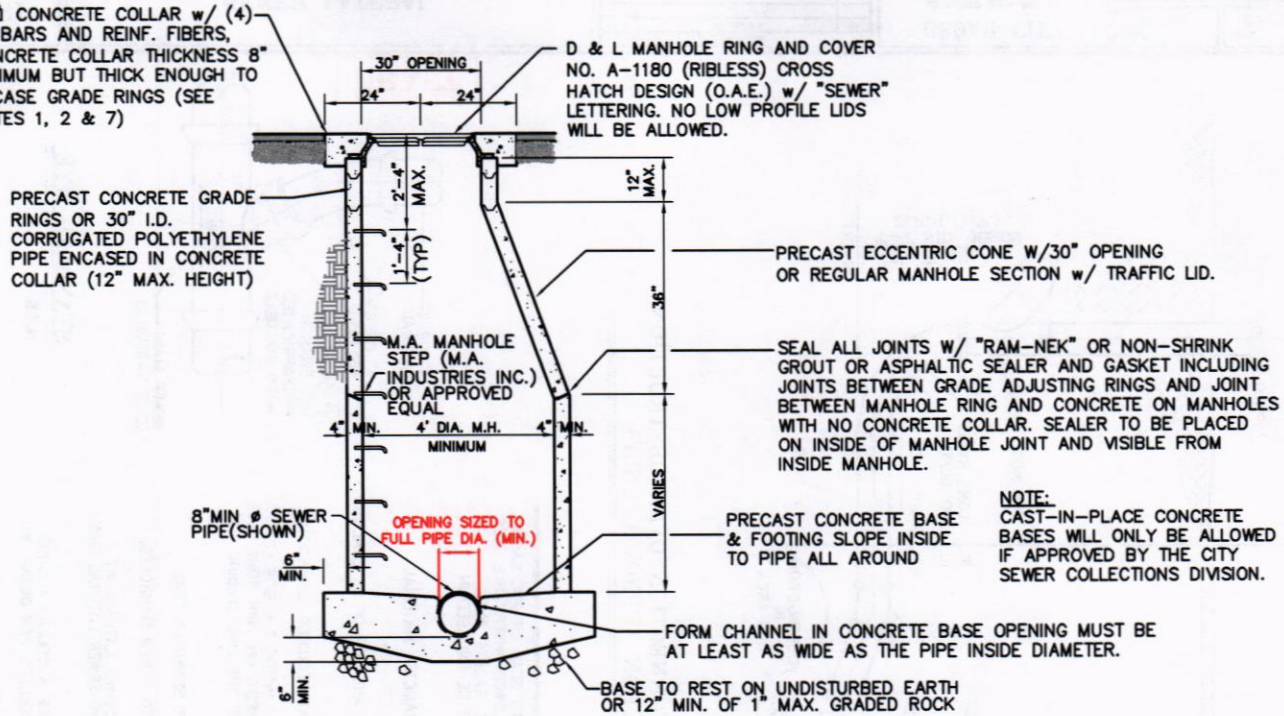

SECTION
TYPICAL MANHOLE FOR SANITARY SEWER
N.T.S.

Add Note 10: The upstream and downstream manholes from a pressure line termination also require the corrosion-resistant Armorock or Sprayroq lining, or approved equal.

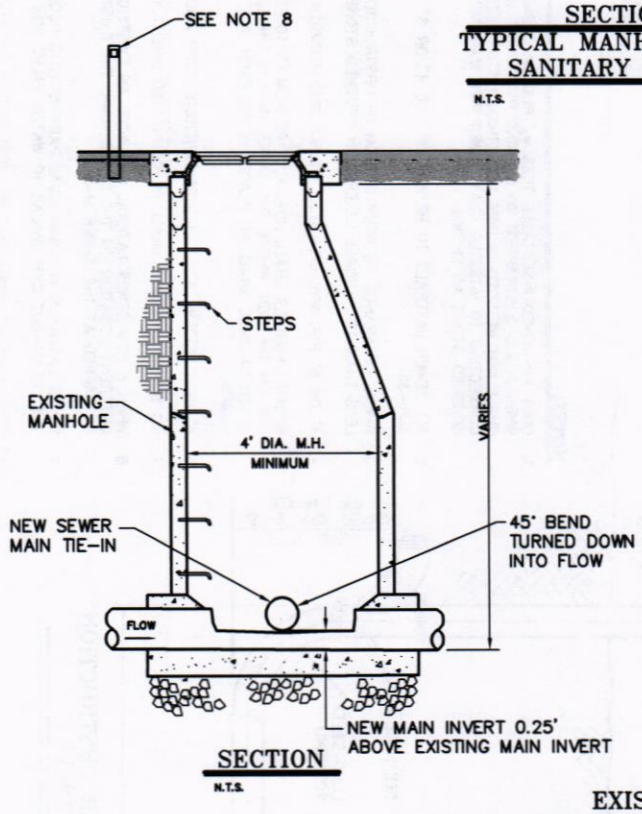

SECTION
N.T.S.

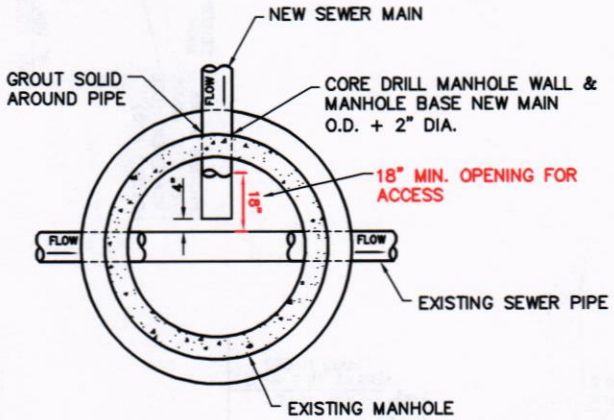

PLAN
N.T.S.

NOTE:
WHEN A SMALLER SEWER MAIN JOINS A LARGER SEWER MAIN IN A MANHOLE, THE TOP OF PIPE ELEVATIONS SHALL MATCH.

EXISTING SEWER MANHOLE CONNECTION
N.T.S.

NOTES:

1. MANHOLES IN ROADWAYS REQUIRE CONC. COLLAR. TOP OF MANHOLE CONE IN UNIMPROVED AREAS SHALL BE SET 6 TO 12 INCHES ABOVE FINISH GRADE WITH NO GRADE RINGS. (NO CONC. COLLAR REQ'D)
2. MANHOLE LID, RING AND CONCRETE COLLAR TO BE CENTERED ON MANHOLE OPENING AND SET 1/4 INCH BELOW TOP OF ASPHALT.
3. 5' DIA. MANHOLES REQUIRED FOR ALL SEWER LINES OVER 12" DIA, OVER 12' DEEP MANHOLE OR 3 OR MORE IN COMING LINES.
4. NO SEWER LATERALS SHALL BE INSTALLED IN MANHOLES.
5. OUTLET PIPE INVERT TO BE 0.05 FEET (MINIMUM) LOWER THAN INLET PIPES IN ALL MANHOLES.
6. NO WOOD OR PVC SHIMS WILL BE ALLOWED BETWEEN LID RING AND ADJUSTING RINGS OR MANHOLE.
7. NOT USED.
8. MANHOLES IN UNIMPROVED AREAS REQUIRE AN ORANGE CARSONITE CRM 66 INCH UTILITY MARKER BE PLACED WITHIN 4 FEET OF THE MANHOLE WITH A STICKER INDICATING SEWER MANHOLE.
9. DROP MANHOLES AND ALL OTHER MANHOLES WITH PRESSURE LINE OF ANY SIZE OR GRAVITY LINES 15 INCH DIAMETER AND ABOVE SHALL BE CORROSION RESISTANT, ARMOR ROCK (PRE-CAST), OR SPRAYROQ (FIELD-APPLIED), 125 MILS THICK, O.A.E.

DRAFT

SHEET NO.		REVISIONS					
S2	NEW SEWER MANHOLE & EXISTING CONNECTION	DATE	DESCRIPTION	BY	CEDAR CITY	SCALE: N.T.S.	DATE: 6/2023
FILE: S02		7/2021	NOTE ADDED ABOUT CAST-IN-PLACE BASES	J.A.S.	10 NORTH MAIN STREET CEDAR CITY, UTAH 84720 PH. (435) 586-2963	DRAWN: T.B.M.	CHECKED: J.A.S.

NOTES:

1. PIPE DROPS: ~~ONLY ONE~~ NO DROP PIPE IS ALLOWED INSIDE THE MANHOLE. SIZE THE DROP PIPE TO BE SAME DIAMETER AS SEWER PIPE DISCHARGING INTO MANHOLE.
2. MATCH POINT: MATCH THE TOP OF THE PIPES.
3. ANCHOR: IF THE DROP IS MORE THAN 18 INCHES, ANCHOR THE RISER TO THE WALL EVERY 36 INCHES. USE CONCRETE ANCHORS 1-1/2" THREADED RODS, AWI PIPE HANGERS w/ 1/2" COUPLING & POLY PROYLENE COLLAR. ALL STEEL SHALL BE 304 STAINLESS.
4. NOT USED.
5. ALL MANHOLES WITH SEWER LINES 15" DIAMETER OR GREATER NEED TO HAVE CONCRETE ACID RESISTANT COATING ARMOR ROCK (PRE-CAST), OR SPRAYROQ (FIELD-APPLIED) 125 MILS. THICK, O.A.E.

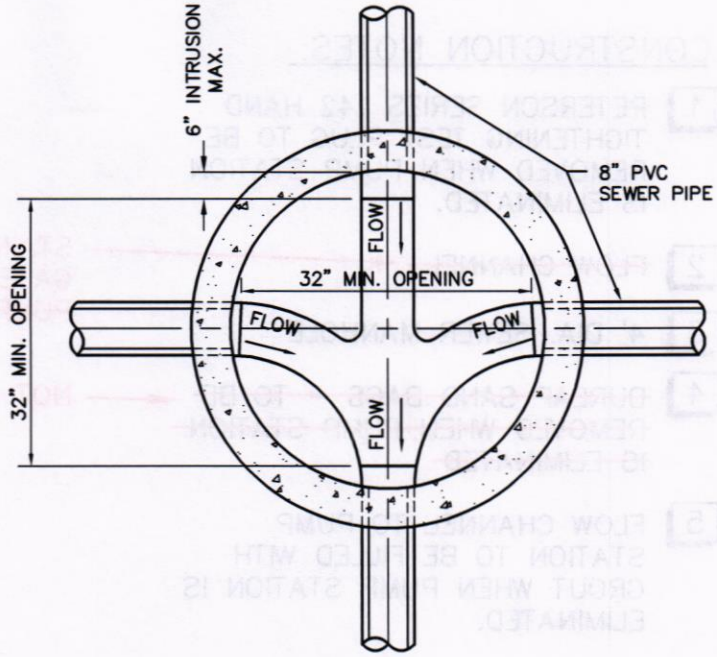

PLAN

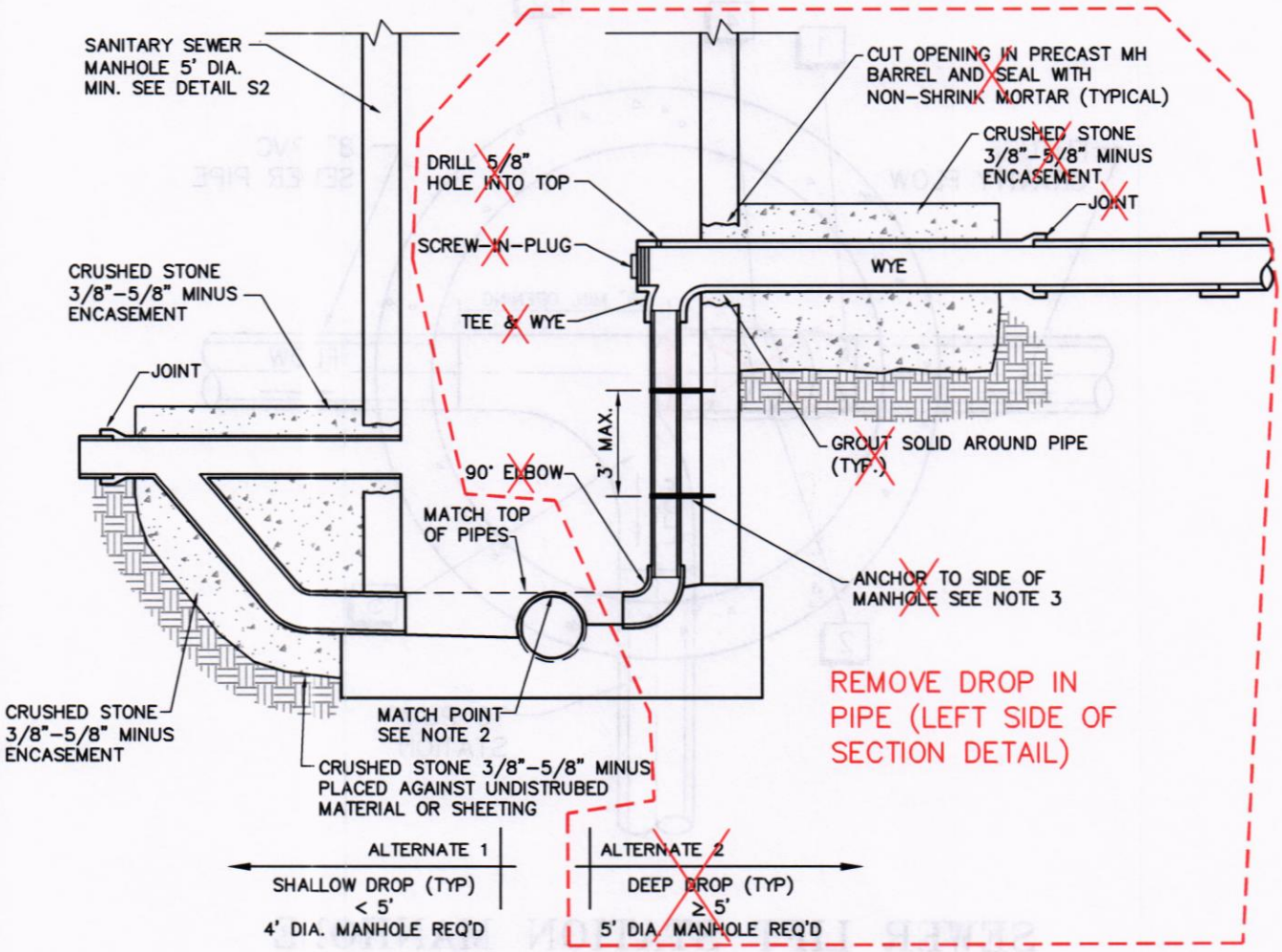

SECTION

DRAFT

SHEET NO.		REVISIONS					
S3	DROP MANHOLE	DATE	DESCRIPTION	BY	CEDAR CITY	SCALE: N.T.S.	DATE: 6/2023
FILE: S03		7/2021	SLURRY, MATCH TOP OF PIPES	J.A.S.	10 NORTH MAIN STREET CEDAR CITY, UTAH 84720 PH. (435) 586-2963	DRAWN: T.B.M.	CHECKED: J.A.S.

CONSTRUCTION NOTES:

1. PETERSON SERIES 142 HAND TIGHTENING TEST PLUG TO BE REMOVED WHEN PUMP STATION IS ELIMINATED.
2. ~~FLOW CHANNEL~~ — STAINLESS STEEL REMOVABLE GATE TO BE REMOVED WHEN PUMP STATION IS ELIMINATED.
3. 4' DIA. SEWER MANHOLE
4. ~~BURLAP SAND BAGS – TO BE REMOVED WHEN PUMP STATION IS ELIMINATED~~ — NOT USED
5. FLOW CHANNEL TO PUMP STATION TO BE FILLED WITH GROUT WHEN PUMP STATION IS ELIMINATED.

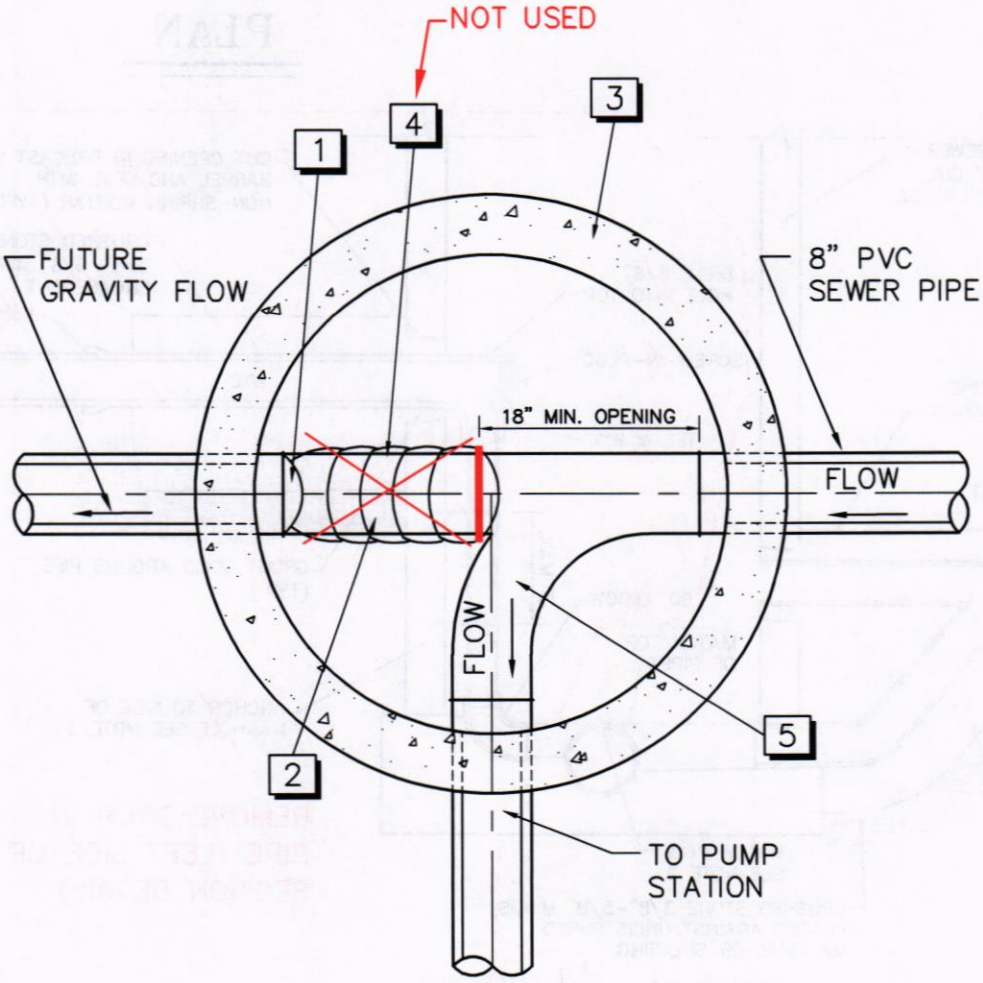

SEWER LIFT STATION MANHOLE

DRAFT

SHEET NO.		REVISIONS					
S9	SEWER LIFT STATION MANHOLE	DATE	DESCRIPTION	BY	CEDAR CITY 10 NORTH MAIN STREET CEDAR CITY, UTAH 84720 PH. (435) 586-2963	SCALE: N.T.S.	DATE: 6/2023
FILE: S09						DRAWN: T.B.M.	CHECKED: J.A.S.

ITEM	DESCRIPTION	MATERIAL & SIZE
1	PUMP	CAST IRON T4A-B
2	DISCHARGE CHECK VALVE	CAST IRON
3	AIR RELEASE VALVE	CAST IRON
4	INTAKE VENT ASSY	ALUMINUM (4 SHUTTERS)
5	STATION ENCLOSURE	MASONRY BLOCK
6	MOTOR	CAST IRON
7	EXHAUST FAN ASSY	OUTDOOR RATED, CORROSION RESISTANT
8	LED LIGHT FIXTURE	VAPOR TIGHT 8000 LM 4000-5000K
9	CONTROL PANEL	STEEL
10	DISCHARGE ISOLATION VALVE	CAST IRON
11	EXHAUST SILENCER	STAINLESS STEEL
12	PUMP & MOTOR BASE ASSY	STEEL
13	STANDBY GENERATOR SET	NATURAL GAS CUMMINS O.A.E.
14	EXHAUST VENT ASSY	ALUMINUM (4 SHUTTERS)
15	BELT GUARD ASSY	STEEL
16	ROOF TRUSSES	STEEL
17	METAL INSULATED ROOF w/ FLASHING	STEEL
18	LED LIGHT FIXTURE	WEATHERPROOF 4500 LM 3000K w/ PHOTOCELL

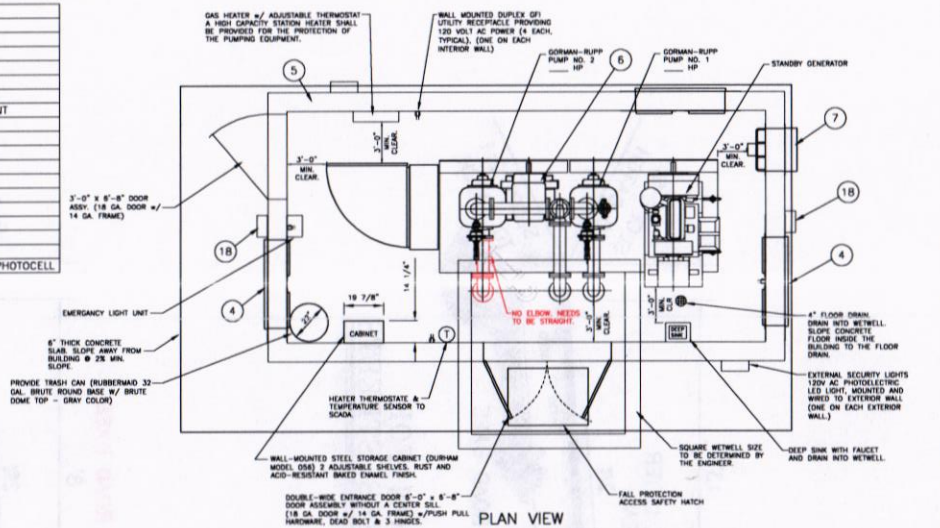

PLAN VIEW

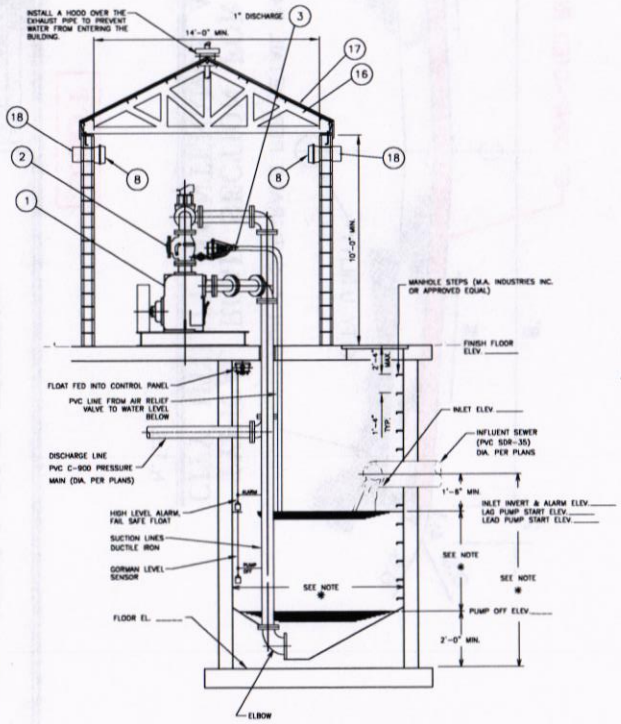

PUMP SIDE ELEVATION

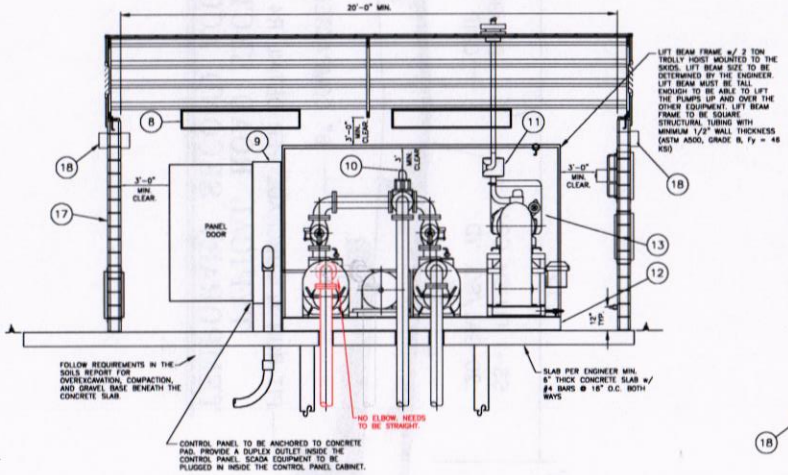

FRONT ELEVATION

GENERAL NOTES:

1. NEED 3 PHASE POWER, 480-VOLT w/ CONNECTION FOR AUXILIARY GENERATOR.
2. BETWEEN PUMP SKIDS AND BUILDING FLOOR. VIBRATION ISOLATION PADS SHALL BE INSTALLED. SKIDS SHALL BE ANCHORED TO CONCRETE FLOOR AND VIBRATION ISOLATION PADS SHALL BE INSTALLED IN SMALL ENOUGH PIECES TO FIT UNDER RAILS.
3. THE PUMP STATION SHALL BE TIED TO THE CEDAR CITY SCADA SYSTEM. PROVIDE SUBMITTALS ON ALL EQUIPMENT TO BE USED. THE SCADA SYSTEM MUST INCLUDE AN INTRUSION ALARM ON THE WETWELL ACCESS HATCH LID AND ON THE DOORS INTO THE LIFT STATION BUILDING, BUILDING TEMPERATURE SENSOR, HIGH LEVEL ALARM, MOTOR RUN, MOTOR FAIL ALARM, AND WET WELL LEVEL AND FLOW METER AND MAIN POWER METER.
4. ALL CONDUITS AND UTILITIES COMING INTO THE BUILDING MUST COME IN THROUGH THE CONCRETE FLOOR SLAB. NO CONDUITS OR UTILITIES MAY ENTER THE BUILDING THROUGH THE WALLS. A SPARE 2" CONDUIT MUST BE STUBBED INTO THE BUILDING THROUGH THE FLOOR SLAB FOR FUTURE USE.
5. THE WET WELL MUST BE LOCATED FACING THE STREET OR ACCESS ROAD SO THAT IT CAN BE EASILY ACCESSED BY THE CITY'S SEWER CLEANING TRUCK.
6. THE SOIL UNDERNEATH ALL CONCRETE SLABS MUST BE OVER EXCAVATED AND RE-COMPACTED PER THE RECOMMENDATIONS GIVEN IN THE SOILS REPORT.
7. THE CONCRETE SLAB MUST BE DOWELED INTO THE WETWELL WITH #4 REBAR @ 18" O.C. TO PREVENT DIFFERENTIAL SETTLEMENT OF THE SLABS.
8. CULINARY WATER SERVICE MUST BE PROVIDED TO THE LIFT STATION SITE. INSTALL A FROST PROOF YARD HYDRANT ON THE SITE WITH 3 FEET BURY DEPTH. (SIMMONS BRAND) RUN CULINARY WATER INTO THE LIFT STATION BUILDING TO THE DEEP SINK. REFER TO THE LIFT STATION SITE PLAN STANDARD DETAIL S7.
9. SLOPE THE ENTIRE SITE AWAY FROM THE LIFT STATION BUILDING AT A MINIMUM 2% SLOPE TO PREVENT WATER FROM PONDING ON THE SITE.
10. MINIMUM LIFT STATION AREA IS 60' x 60', FENCED PER UDOT DETAIL NO. FD-6 w/ A 16' WIDE DOUBLE SWING GATE. REFER TO THE LIFT STATION SITE PLAN STANDARD DETAIL S7.
11. SEAL ALL OPENINGS THRU CONCRETE PAD INTO STATION ENCLOSURE GAS TIGHT.
12. A GAS TIGHT FLOOR DRAIN IS REQUIRED IN THE BUILDING. SLOPE THE CONCRETE FLOOR TO THE FLOOR DRAIN. DRAIN INTO THE WETWELL.
13. THE FOLLOWING UTILITIES MUST BE RUN TO THE LIFT STATION SITE. THERE ARE NO EXCEPTIONS TO THIS REQUIREMENT. ALL OF THESE UTILITIES MUST BE BROUGHT INTO THE LIFT STATION SITE. ALL METER AND PANEL LOCATIONS MUST BE REVIEWED AND APPROVED BY THE CITY ENGINEER PRIOR TO INSTALLATION:
    NATURAL GAS
    POWER
    TELEPHONE
    FIBER INTERNET, IF AVAILABLE
    CULINARY WATER
14. THE CONTROL PANEL MUST BE ANCHORED TO THE CONCRETE PAD.
15. PROVIDE A DUPLEX OUTLET INSIDE THE CONTROL PANEL. SCADA EQUIPMENT MUST BE PLUGGED IN INSIDE THE CONTROL PANEL.
16. THE BUILDING SHALL COME EQUIPPED WITH A 12-VOLT DC EMERGENCY LIGHTING SYSTEM THAT WILL PROVIDE 50 WATTS OF ILLUMINATION FOR 1-1/2 HOURS IN THE EVENT OF AN EMERGENCY.
17. THE MINIMUM BUILDING DIMENSIONS ARE 12' WIDE x 20' LONG. THERE MUST BE AT LEAST 3' OF CLEARANCE ALL AROUND. HEIGHT CLEARANCE MUST ALLOW FOR THE LIFTING BEAM TO BE TALL ENOUGH TO LIFT THE PUMP EQUIPMENT UP AND OVER THE OTHER EQUIPMENT.
18. THIS DETAIL DRAWING DOES NOT TAKE THE PLACE OF STAMPED ENGINEERING DRAWINGS FOR THE LIFT STATION. STRUCTURAL DRAWINGS MUST BE PROVIDED FOR THE MASONRY BUILDING THAT ARE STAMPED BY A LICENSED STRUCTURAL ENGINEER. SUBMITTALS, SHOP DRAWINGS, ENGINEERING CALCULATIONS, AND STAMPED CONSTRUCTION DRAWINGS MUST BE SUBMITTED TO THE CITY ENGINEER FOR ALL PROPOSED PUMP EQUIPMENT AND FOR THE BUILDING. THE DIMENSIONS SHOWN ON THIS DRAWING ARE PROVIDED TO SHOW THE MINIMUM CLEARANCES THAT MUST BE MET.
19. 120-VOLT ELECTRICAL OUTLETS MUST BE LOCATED A MINIMUM OF 12" ABOVE THE FLOOR.
20. SUBMITTALS ARE REQUIRED FOR ALL LIGHTS, FANS, HEATER, ELECTRICAL EQUIPMENT, PUMPS, SCADA, ETC. AN OWNER'S MANUAL MUST BE PROVIDED TO THE CITY FOR ALL EQUIPMENT IN THE LIFT STATION PRIOR TO COMPLETION OF THE PROJECT.
21. THE CONTROL PANEL SHALL BE EQUIPED WITH AN DORSETT SCADA SYSTEM TO PROVIDE CONTACT WITH CITY PERSONNEL ON ALL ALARM POINTS.

NOTE:
* WETWELL. THE SIZE OF THE WETWELL AND THE DISTANCE FROM THE INVERT OF THE INFLUENT LINE TO THE CONCRETE PAD SHOULD BE PROPERLY DESIGNED TO ALLOW AT LEAST TEN MINUTES LAPSED TIME BETWEEN SUCCESSIVE STARTS OF A PUMP TO PREVENT SHORT CYCLING OF ELECTRIC MOTORS AND CONTROL.

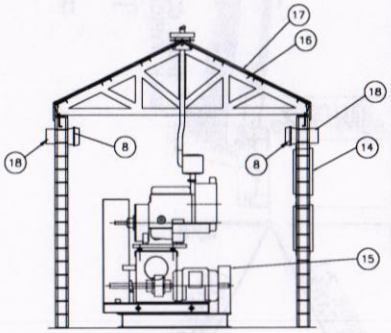

NATURAL GAS GENERATOR SIDE ELEVATION

DRAFT

REVISIONS		
DATE	DESCRIPTION	BY

DATE: 6/2023
SCALE: N.T.S.
DRAWN: T.B.M.
CHECKED: J.A.S.

CEDAR CITY
10 NORTH MAIN STREET
CEDAR CITY, UTAH 84720
PH. (435) 586-2963

SELF PRIMING SEWER LIFT STATION

SHEET NO. S5
FILE: S05.DWG

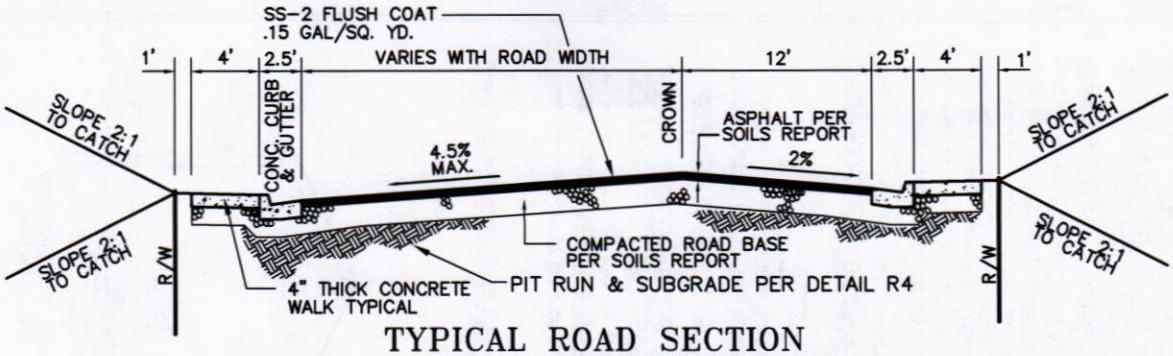

TYPICAL ROAD SECTION WITH CROSS-SLOPE

N.T.S.

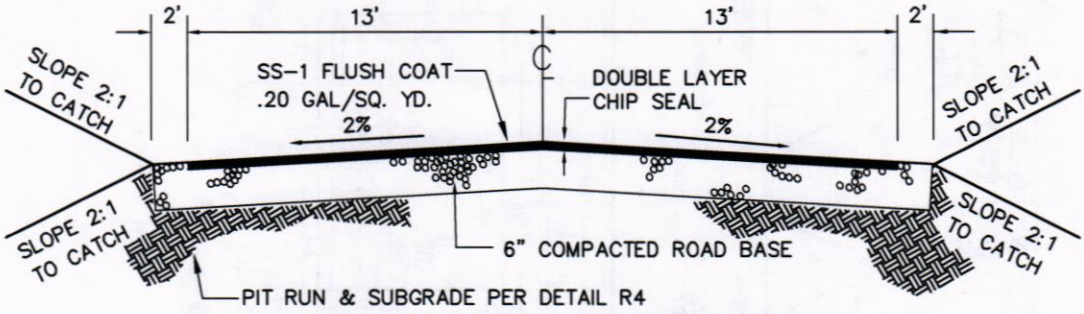

TYPICAL ROAD SECTION FOR TEMPORARY SECOND ACCESS STREETS

N.T.S.

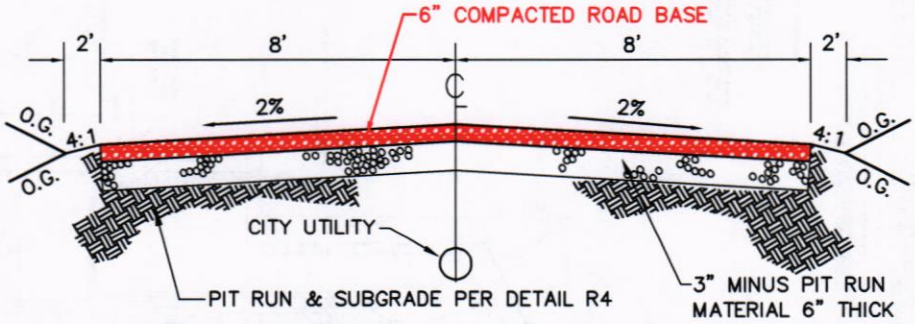

TYPICAL ROAD SECTION FOR TEMPORARY CITY UTILITY MAINTENANCE ACCESS ROADS

N.T.S.

DRAFT

SHEET NO.		REVISIONS					
R5	SPECIAL ROAD SECTIONS	DATE	DESCRIPTION	BY	CEDAR CITY	SCALE: N.T.S.	DATE: 7/2021
FILE: R05		7/2021	DELETED RE ROAD SECTION	J.A.S.	10 NORTH MAIN STREET CEDAR CITY, UTAH 84720 PH. (435) 586-2963	DRAWN: T.B.M.	CHECKED: J.A.S.

II. **CITY ITEMS**

1. Engineering Standards Revisions- Sewer (Recommendation) — Randy Clove/ Jonathan Stathis

Jonathan: There are quite a few changes being recommended to the Sewer section of the Engineering Standards. First one to change design to half full. Currently 2/3. We find that water infiltrated especially during storm events. We saw that a couple of weeks ago during the heavy rains. By designing half full gives us some capacity in the existing line to carry rainwater if it gets in there. Theres not much you can do, the manholes have vented lids, you always will get some rainwater into it. We want to have some additional capacity for infiltration during a storm. Next item, regarding minimum number of homes requires on a sewer line. We currently have a maximum number that are allowed into a sewer line. We don't have a minimum. Some may ask, why do you have to have a minimum number of homes on a line. One of the reasons why is you have to have a certain minimum flow to meet what's called the scour of velocity. You want to be able to clean that line out, keep it moving.
Carter: If you lower the minimum, if I am a house, and minimum is not met, can I say to city I can now do a septic?
Jonathan: No, this would be for new developments that come in, new subdivisions. Currently we don't have a minimum on an 8-inch line, we still wouldn't have a minimum, that is the majority of our lines. The majority of where we see this is when we see developers want to run a 10-inch line so they can run it at a flatter slope. We are seeing that a lot out in the valley now, getting into the flatter areas. We want to still be able to allow them to do that, but they need to be able to meet the minimum number of homes on that line. Otherwise, they get odor complaints, issues of possible backups. If a home is already on it, obviously they are grandfathered in. We are looking mainly at new developments. We want to make sure they meet the new minimum number of homes to be able to clean the lines out. The way it is written is that they would have to look at the build-out area. You're going to start with one phase may not have it in first phase, but they have to be able to show that in future phases they can meet that.

Randy: We have taken this off state standards. We have a book called Concurry(SP?) Manual. It is a National Manual. A lot of this stuff we pulled right out of the manual that they are using Nationally.
Tom: I misinterpreted, that you would have to start with 10 homes
Jonathan: They would start out with their first phase. They would need to show that the area feeding into that line would meet that minimum number of homes. The next item is to change the text that says a sewer line can not be increased to decrease the minimum slope. This goes back to the minimum number of homes. If the lines are run flatter with fewer homes on it, then there are odor complaints, and it increases the potential for backups. A lot of times we will see a request to run a line flatter, but with a larger diameter. It just creates problems for the sewer department. It can lead to back u s and odor complaints because that flow is not moving through the pipes like it should. The next item talks about rear lot sewers should only be allowed by the city sewer division. When we talk about rear lots, typically the sewer line is out on the street. We have situations, particularly on hillsides and other areas where we are connecting sewer lines in the back of the lots. It creates difficulties to be able to get the sewer truck back there to clean it. People build fences, they put in landscaping, they do a lot of things on the back of their lots. It creates a lot of difficulties to be able to get into those back yards to maintain the sewer. Are there times when that has to happen, yes, there are those times. That would fall back on getting approval from the city sewer collection to be able to do that. We do have a lot of rear lots.
Randy: Prime example Carmel Canyon dangerous, there are boulders, we are up there trying to keep it clean. If you dig a basement, where the boulders go, down onto our service road. We have the options

in, trying to get them to put the sewer in the front. Now it is modernized, you can put a pump in your basement. They are computerized, they will give you a phone call if your pump has a problem. Everything is up to date; it is not a big deal. It makes more sense than putting the liability on the city, putting it in the back lots, than going in there and trying to keep it maintained, the cost of it. It makes sense for a few houses here and there could have just been on pumps. That would have made sense to put it up front now. To this day we are still fighting it. We have a list of houses out there and I have to go out and explain to them, it's a hard thing to explain to somebody. You have a 20-foot road in the back of your property, and you have to keep it usable to us to drive our vehicles. Opening gates, trying to get people to move their trailers out of the way. We have people put sheds on top of it. It has gotten hard. If we put it in the verbiage to say, only if there is no other route. We want to get a handle on what's going on. Instead of having engineers out of state wanting to build these subdivisions. Let us approve it, instead of you wasting all this time. Show us a reason you have to have it there.
Jonathan: Another item talks about drop manholes, a change to not allow the drop inside the manhole. Sometimes when there is a large change in elevation from a line coming into a manhole, rather than digging that line deeper, they will bring it in higher in the manhole. Then there would actually be a pipe in the manhole that drops it down into the trough. The problem with having the drop inside the manhole reduces working space. Creates problems with debris and solids that can lodge inside the manhole. Drop outside the manhole.
Randy: We want to put it in the wording, allowed only by collections. We have an example of this: We have a have a developer on 3900. He didn't want to pay to put the depth of the line in. We are talking six feet difference in cost. They fought it, it went through, we just said okay. All of a sudden, three months later, up the road, we have the developer now, everyone of those houses now are on a PUD pressurized system. Just out of Equestrian Point. If we wouldn't have allowed that 6-foot drop, and they would have come in and put that at that depth, these homeowners wouldn't have had to put pumps in their basements. Or even the slab on grades. They would have had a gravity sewer. So here we are. This is why we want to word it this way, so we can look out for everybody, not just that one subdivision if we put it in this way. We can look and future plan. We can't always see how things are going to be developed. This way, if we could put a sewer in as max depth, we do that so we can make sure we can put as many customers as possible on there without putting pumps in their basement. Make it easier for the next development to tie on to the sewer.
Jonathan: The next part is talking about sewer lift station. We would like to add some text stating that when there is a sewer lift station that the city is going to be participating in the cost, that we know those costs up front. When we talk about a sewer lift station, we are talking about pumping system. Those lift stations are getting very expensive. If the city is participating, we want to make sure we know up front exactly how much. The participation can come in two ways, one, if it is on the sewer master plan, or if it is benefiting areas outside of a particular development. Also, some text to clarify requirements to lift stations and sewer maintenance access road to lift stations. The sewer department needs to be able to get their big trucks out to those lift stations, and also be accessible year-round. Those roads are typically not paved out to those lift stations. But they still need to be designed and maintained at the level to get the trucks out to the lift station.
Tom: Cost?
Randy: $1.5 it is a future design.
Jonathan: The text is being proposed to improve the design of future lift stations for long term maintenance. At locations where pressure sewer enters the manhole, the upstream and downstream manholes will need to be coated. Mainly because sewer gases are brought into the system from the pressure system.
Randy: It does that so if we have complaint the gasses will eat the H2S will eat the concrete inside the manhole. I can go put a solid lid on, to take care of the odor complaint. When it is coated, it won't eat

the concrete away.
Jonathan: We are also proposing some changes to the standard detail, based on the text being recommended to change. That is a summary of proposed changes.
Randy: Low flow taps, and everything low flow is causing problems. The scouring that we are talking about, we are having those issues.

Craig Isom moves for positive recommendation to Engineering Standard Revisions.
Carter Wilkey seconds, All in favor for a unanimous vote.

Meeting adjourned 6:39pm

CEDAR CITY
CITY COUNCIL AGENDA ITEM 12
STAFF INFORMATION SHEET

To: Mayor and City Council

From: Jonathan Stathis

Council Meeting Date: October 4, 2023

Subject: **Consider the final change order for the Center Street Concrete Inlet/Outlet Structures project.**

Discussion: This project involved the completion of concrete structures on both sides of the Center Street overpass at the location where the culverts pass through. The construction project has been substantially completed by Blackburn & Associates and the final change order has been prepared for the project.

The proposed change order is deductive in the amount of ($28,700.00). If the change order is approved, then the total contract amount will be reduced from $353,992.00 to $325,292.00.

Per the City's Purchasing Policy, deductive change orders of 5% or more must be approved by the City Council. This proposed change order amounts to a deduction of 8.11% of the contract amount.

The following item is the main reason for the reduction in the contract amount:

- The bid item for riprap is proposed to be removed from the contract. This riprap is designed to be installed on the outlet side of the Center Street overpass in case the structure overflows. The riprap can be installed at a later date by the City Street Division.

Please refer to the following page for a copy of the proposed final change order.

Please consider whether to approve the final change order for the Center Street Concrete Inlet and Outlet Structures project.

CHANGE ORDER

Order No. 02 (Final)
Date: 8/23/2023
Agreement Date: 7/15/2022

NAME OF PROJECT:

Storm Drain Improvements Project –
Center Street Concrete Inlet and Outlet Structures 2022-2023

CITY: Cedar City Corporation

CONTRACTOR: Blackburn & Associates

The following changes are hereby made to the CONTRACT DOCUMENTS:

Description:

ITEM	DESCRIPTION	UNIT	QUANTITY CHANGE	COST	FINAL AMOUNT
A8	Grouted Rip Rap	S.Y.	-82	$350.00	-$28,700.00

Justification: Street department to install riprap. Blackburn and Associates not able to access area and complete this bid item due to the I-15 Storm Drain Improvement Project Phase 1 that is ongoing.

Change to CONTRACT PRICE:

Change Order Amount:	$ (28,700.00)
Original CONTRACT PRICE:	$ 345,400.00
Current CONTRACT PRICE adjusted by previous CHANGE ORDER	$ 353,992.00
The new CONTRACT PRICE including this CHANGE ORDER will be	$ 325,292.00

Change to CONTRACT TIME:
The CONTRACT TIME will be (increased) (decreased) by _____ calendar days.
The date for completion of all work will be _____ (Date).

Ordered by: _____
(City)

Accepted by: _____
(Contractor)

CEDAR CITY
CITY COUNCIL AGENDA ITEM 13
STAFF INFORMATION SHEET

To: Mayor and City Council

From: City Engineer

Council Meeting Date: October 4, 2023

Subject: **Consider the Southern Utah ARPA Reuse Grant agreement with the Utah Division of Water Quality.**

Discussion: Cedar City has been awarded $1,354,000 in grant funding through the Southern Utah Reuse Grant program. That program is funded through the American Rescue Plan Act of 2021 (ARPA). The initial application proposed that the grant funding would be used to construct a pump station and pipeline to convey the treated effluent from the Wastewater Treatment Plant (WWTP) to recharge locations. It is proposed that the first phase of the project will be to construct a pump station located at the WWTP.

The City's required match for the project is 30% or a minimum of $580,286. The City can match more than that depending on the overall cost of the project. The initial funding application submitted by the City for the project was $10,000,000. However, only a small portion of that amount was awarded as part of the grant. The City currently has $1,900,000 budgeted in the "Design for Filtration System and Retention Pond" project in the WWTP fund that could be used for the design of the project.

A copy of the award letter and grant agreement from the Utah Division of Water Quality are included on the following pages.

Please consider whether to approve the grant agreement for the Southern Utah ARPA Reuse Grant.

State of Utah

SPENCER J. COX
Governor

DEIDRE HENDERSON
Lieutenant Governor

Department of
Environmental Quality

Kimberly D. Shelley
Executive Director

DIVISION OF WATER QUALITY
John K. Mackey, P.E.
Director

April 17, 2023

VIA EMAIL
(Read Receipt Requested)

Mayor Garth Green
10 North Main St.
Cedar City, Utah 84720
garthg@cedarcity.org

Subject: Cedar City- Agreement #ARPASUR2
American Rescue Plan Act (ARPA) Agreement

Dear Mayor Green:

On December 14, 2022, the Utah Water Quality Board authorized funding to Cedar City for Southern Utah Reuse ARPA funding. The funding is subject to the General Provisions as well as the Special Grant Provisions as outlined in the agreement.

Please review the agreement and return the signed copy to: eqwqfinance@utah.gov.

Upon receipt, the agreements will be signed by the Division of Water Quality and will be forwarded to the Utah Division of Finance for final processing.

Please ensure your entity has completed the vendor set up process in order to be reimbursed for eligible expenses for the planning grant. This may include providing an updated W-9 and registering in the Payment Works system.

If you have any questions or concerns regarding your agreement, please contact Andrew Pompeo at 385-320-1057 or by email apompeo@utah.gov or email the finance team eqwqfinance@utah.gov.

Sincerely,

John K. Mackey

John K. Mackey, P.E.
Executive Secretary

JKM/AP/cjh

Enclosures: 1. ARPA Agreement (DWQ-2023-003876)

Cc: Jonathan Stathis, Cedar City
Jeremy Roberts, Southwest Utah Public Health
Paul Wright, DEQ
Ken Hoffman, DWQ
Adriana Hernandez, DWQ
dwqarpareuse@utah.gov

DWQ-2023-004252

Grant Agreement Number: ARPASUR2

STATE OF UTAH GRANT AGREEMENT
SOUTHERN UTAH REUSE GRANT PROGRAM
DEPARTMENT OF ENVIRONMENTAL QUALITY
DIVISION OF WATER QUALITY
Cedar City
State Fiscal Year 2023

1. **GRANT AGREEMENT PARTIES:** This Southern Utah Reuse Grant Program Grant Agreement (this "Agreement") is between the State of Utah, Water Quality Board (the "Board"), and the following Grantee:

Grantee Name:	Cedar City
Grantee Address:	10 N. Main Street Cedar City, UT 84720
Federal Tax ID:	_____
Legal Status of Grantee:	Local
GovernmentSAM UEI#:	_____
Contact Person:	Jonathan Stathis
Phone #:	(435) 463-0412
Email:	jstathis@cedarcity.org

2. **METHOD OF DISTRIBUTION:**
Upon completion of this Agreement, the Grantee shall submit invoices requesting payments per section 3of Attachment C – TERMS AND CONDITIONS.

3. **GENERAL PURPOSE OF AGREEMENT:**
The general purpose of this Agreement is to provide American Rescue Plan Act of 2021, Coronavirus State Fiscal Recovery Fund (CFDA #: 21.027) (FAIN: SLFRP3929) to Grantee, as directed by the Utah State Legislature in Utah Code § 63J-4-801, *et seq.*, to be used, in conjunction with Grantee's matching funds, for the following project: Cedar City's Reuse Pump Station and Pipeline.

4. **AGREEMENT PERIOD:**

Effective Date:	12/14/2022
Termination Date:	December 31, 2026, with no option for renewal or extension.
Incurred Costs Period:	As set forth in the U.S. Department of the Treasury's implementing regulations, Grantee may use award funds to cover eligible costs incurred during the period that begins on March 3, 2021, and ends on December 31, 2024, as long as the award funds for the obligations incurred by December 31, 2024 are expended by December 31, 2026.

Unless either party terminates this Agreement in accordance with the terms and conditions herein, thisAgreement will remain in effect for the entire term.

5. **AGREEMENT AMOUNT:** The Board shall pay to the Grantee no more than a maximum of

$1,354,000.00 for costs authorized under this Agreement. All expenditures and activities must comply with all attachments herein and must occur before this Agreement terminates. Funding must not be used for purposes contrary to federal, state, or local laws.

6. ATTACHMENTS INCLUDED AND MADE PART OF THIS AGREEMENT:

Attachment A – SCOPE OF WORK
Attachment B – REPORTING REQUIREMENTS
Attachment C – TERMS AND CONDITIONS
Attachment D – FFATA CERTIFICATION
Attachment E – DISBURSEMENT REQUEST FORMS

Any conflicts between Attachment C and any other Attachment will be resolved in favor of Attachment C.

7. AGREEMENT INFORMATION:

Grantor:	Water Quality Board
Address:	195 N. 1950 West, Salt Lake City, UT 84114
Contact Name:	Ken Hoffman
Contact Title:	Engineering Section Manager
Contact Phone:	(801) 536-4313
Contact Email:	kenhoffman@utah.gov

8. AGREEMENT EXECUTION:

Each person signing this Agreement represents and warrants that he/she is duly authorized and has legal capacity to execute and deliver this Agreement and bind the parties hereto. Each signatory represents and warrants to the other that the execution and delivery of the Agreement and the performance of each party's obligations hereunder have been duly authorized and that the Agreement is a valid and legal Agreement binding on the parties and enforceable in accordance with its terms. This Agreement is not fully executed until all parties have signed this Agreement.

BY SIGNING THIS AGREEMENT, THE GRANTEE HEREBY ACKNOWLEDGES THAT THEGRANTEE HAS READ, UNDERSTOOD, AND AGREES TO THE TERMS AND CONDITIONS OF THIS AGREEMENT.

THE STATE OF UTAH	Cedar City
Water Quality Board	
_____	_____
Name: John K. Mackey	Name:
Title: Executive Secretary	Title:
Date:	Date:

ATTACHMENT A:
SOUTHERN UTAH REUSE GRANT PROGRAM
SCOPE OF WORK

Project Statement:

This project includes the construction of a pipeline and a lift station to convey treated effluent from the treatment facility to existing land application sites. Cedar City may choose to pump the treated effluent to a groundwater infiltration site, but that is not within the scope of this grant.

Project Deliverables / Performance Measures:

We will measure the benefit of this project by receiving monthly monitoring reports from Cedar City and monitoring effluent quality from the treatment plant and from the storage pond.

Project Budget (identify all funding sources and total project costs):

Funding Source	Cost Sharing	Percent of Project
ARPA (So. Utah Reuse Grant Program)	$1,354,000	13.5%
Local Funds	$8,646,000	86.5%
Total	$10,000,000	100%

Project Match Requirement: $580,286

Grantee acknowledges that this project is subject to the STATE OF UTAH – SOUTHERN UTAH REUSE GRANT PROGRAM GRANT AGREEMENT

SPECIAL CONDITIONS

1. The Grantee must secure a construction permit and bid approval for the Project from the Division of Water Quality (Division) prior to soliciting bids. Final bidding and contract documents should be submitted to the Manager of the Engineering Section, Utah Division of Water Quality, for review.

2. The Grantee must secure an approval to award from the Division prior to signing the construction contract.

3. The Grantee shall acquire rights-of way and easements for construction and ongoing operation and maintenance of the Project facilities. The Grantee, through its engineer, shall furnish its attorney a right-of-way map showing the location of all lagoons, buildings, structures, pipelines, and other pertinent facilities in the Project. The engineer and presiding officer of the Grantee will sign this map.

4. The Grantee's attorney shall certify the following items in writing to the Division:
    a. The Grantee is a legal entity as of the date of the construction contract award;
    b. The Grantee has valid legal title to the rights-of way designated and shown on the right-of-way map, including rights-of-way both for the Project to be constructed and the remainder of the existing wastewater system as of the date of bid closing;
    c. The bidding and contract documents for the construction of the Project have the proper and legal format and are in compliance with the Utah Code § 34-30-1 *et. seq.*; and
    d. Following review by the Grantee's attorney of the completed and executed construction

contract, performance and payment bonds, and evidence of necessary insurance, the Grantee 's attorney shall furnish to the Division the legal opinion that all of such items are legal and binding and in compliance with the Utah Code.

5. The Grantee shall provide certification of the following items, in writing, to the Division:
   a. Certification Regarding Debarment, Suspension, Ineligibility and Voluntary Exclusion;
   b. Certification of Non-Segregated Facilities; and
   c. Certification that Grantee agrees, in accepting these funds, to comply with all applicable state and federal regulations related to the Coronavirus State and Local Fiscal Recovery Funds. These requirements include, but are not limited to, 31 C.F.R. Part 35, The Single Audit Act of 1996, the Utah Money Management Act, the Utah Procurement Code and the State of Utah Legal Compliance Audit Guide and Generally Accepted Accounting Principles.

ATTACHMENT B:
SOUTHERN UTAH REUSE GRANT PROGRAM
REPORTING REQUIREMENTS

1. **PUBLIC FUNDS:** Grantee shall comply with applicable state statutes on reporting and expenditure of public funds. Specifically, Utah Code § 63J-1-220(2)(b) requires the recipient entity to provide the Division with annual reports and a final report. Grantee understands and acknowledges that the Governor's Office of Planning and Budget is required to report to the United States Treasury regarding the American Rescue Plan Act of 2021, Coronavirus State Fiscal Recovery Fund funds. Grantee will provide the information and reports required by this agreement and any additional information or reporting that may be required by the State.

2. **SEMIANNUAL REPORT:** Grantee shall submit a report to the Division, as directed by the Division, semiannually on January 31 and July 31 of every year until the project is complete. The report shall provide information regarding the subject project's obligations, expenditures, contracts, grants, sub- awards, and specifics of how the expenditures were for eligible uses. The report also must respond to eachof the items below in the order specified:

    a. The actual amount spent on the project and the time frame this amount was spent;
    b. A breakdown of how funds were spent, by funding source;
    c. The projected spending by fiscal year-end (June 30 of each year);
    d. The amount of remaining unspent Local Assistance Monies;
    e. An assessment of implementation which includes: (i) what month and year the project is expectedto be fully implemented; (ii) whether the project encountered any factors that caused a delay in implementation and explanation of these factors; and (iii) whether the project encountered any factors that caused a change in scope and an explanation of these factors;
    f. An assessment of accuracy which includes: (i) how much of the Local Assistance Monies were spent as of the last reporting period; (ii) how much of the Grantee's matching funds were spent asof the last reporting period; and (iii) how much of the awarded Local Assistance monies is expected to be spent by fiscal year-end (June 30 of each year); and
    g. An assessment of performance which includes: (i) how the success of the project is beingmeasured; and (ii) how successful the project has been according to those metrics.

3. **FINAL PAYMENT REQUEST:** Grantee acknowledges Grantee's responsibility to submit reports, respond to legislative or governor inquiries, and comply with other reporting rules to receive Final Payment. To request the remaining 20% of the granted Local Assistance Monies, the Grantee shall submit a Final Payment Request, which will include the following information:
    a. Summary and documentation of actual project expenditures to date, including the source of thefunds spent;
    b. The anticipated date that the project will be completed; and
    c. Demonstration of commitment of all funds necessary for the completion of the project.

4. **FINAL REPORT:** The Final Report consists of one final quarterly Report submitted after the project hasbeen completed and closed out. Grantee must provide this Final Report within three months after completing the project.

5. **REPORTING CERTIFICATION:** By signing and entering into this Agreement with the

State, the Grantee certifies that the Grantee shall provide an itemized report semiannually, a final payment request,and a final report when the project is completed.

ATTACHMENT C:
SOUTHERN UTAH REUSE GRANT PROGRAM
TERMS AND CONDITIONS

1. **DEFINITIONS:** The following terms shall have the meanings set forth below:
   a. "**Agreement**" means these terms and conditions, the cover pages, and all other attachments anddocuments incorporated by reference.
   b. "**ARPA**" means the American Rescue Plan Act of 2021
   c. "**Grantee**" means the local government entity which is the recipient of Local Assistance SFRF monies from the State. The term "Grantee" includes Grantee's agents, officers, employees, andpartners.
   d. "**Local Assistance Monies**" means funds distributed through the Southern Utah Reuse Grant Program (Utah Code § 63J-4-801, *et seq.*) from the State's ARPA-Coronavirus State Fiscal Recovery Fund funds.
   e. "**Matching amount**" means the difference between the total project cost and the Local Assistance Monies provided under this Agreement. This matching amount can include the Grantee's own funds and funds from other sources dedicated to the completion of the project.Matching amount does not include Local Assistance Monies provided under this agreement.
   f. "**Non-Public Information**" means information that is deemed private, protected, controlled, orexempt from disclosure under the Government Records Access and Management Act
   ("**GRAMA**") or as non-public under other applicable State and federal laws. Non-Public Information includes those records the State determines are protected after having properly received a written claim of business confidentiality as described in Utah Code § 63G-2-309. TheState reserves the right to identify additional information that must be kept non-public under federal and State laws.
   g. "**Project**" means the project identified in ATTACHMENT A: SCOPE OF WORK
   h. "**State**" means the State of Utah, Department, Division, Board, Office, Bureau, Agency, or other State entity identified in this Agreement.
   i. "**SubGrantees**" means persons or entities under the direct or indirect control or responsibility of Grantee, including, but not limited to: Grantee's agents; consultants; employees; authorized resellers; or anyone else for whom Grantee may be liable at any tier, including a person or entity providing or performing this Agreement, such as Grantee's manufacturers, distributors, and suppliers. SubGrantees also include other collaborating entities that will assist in the execution ofthe project.

2. **MATCH REQUIREMENT:** Grantee agrees to spend the matching amount concurrently with the LocalAssistance Monies in that same proportion that the matching amount bears to the overall cost of the project.

3. **PAYMENT:** Unless otherwise stated in this Agreement, the State agrees to reimburse the Grantee.
   a. Consistent with requirements of the law, the actual payment of funds by the Board to the Grantee will not take place until the Board has assurance the funds will be used for Project costs and the Project will actually be completed.
   b. All disbursements shall demonstrate the co-investment (matching funds) by the Grantee.
   c. Disbursements requests will be reviewed and approved by the Division of Water Quality. The disbursement request forms contained in ATTACHMENT E: DISBURSEMENT FORMS must be completed and submitted along with

each request.

d. Grantee will receive up to 80% of the maximum amount to be paid under this Agreement during project construction after approval of the signed Agreement.

e. Grantee will receive the remaining percentage of the maximum amount to be paid under thisamount upon submission of a Final Payment Request as outlined in ATTACHMENT B: REPORTING REQUIREMENTS.

f. The acceptance by Grantee of final Local Assistance Monies payment, without a written protest filed with the State within ten (10) business days of receipt of final payment, shall release the State from all claims and all liability to Grantee. No State payment is to be construed to prejudice any claims that the State may have against Grantee. The State may withhold, adjust payment amount, or require repayment of any Local Assistance Monies under this Agreement that is: (i) provided in reliance on an inaccurate or incomplete representation; (ii) unsupported by sufficientinvoices or other documentation; (iii) not used by Grantee for the project identified; (iv) used forany purpose in violation of the terms of this Agreement or in violation of the law; or (v) paid in excess of what is actually owed.

4. PERMISSIBLE USE OF FUNDING:

a. Funds awarded as part of this Agreement can only be used for expenditures directly related to completing the project as described in ATTACHMENT A: SCOPE OF WORK. Any changes to the approved project must be submitted in writing and approval must be obtained prior to using funding outside of the originally approved project parameters. Funding obtained through this Agreement cannot be used to reimburse expenditures incurred prior to the Period of Performance.

b. Due to the Local Assistance Monies being federal funds from the ARPA, it is the responsibility ofthe Grantee to adhere to all use of funding requirements as outlined in the applicable laws, including but not limited to American Rescue Plan Act of 2021, Public Law 117–2, codified at 42 U.S.C. 802 *et seq*., Section 603 of the Social Security Act, 31 C.F.R. Part 35, and the U.S. Department of the Treasury's Interim Final Rule and any final rule(s) regarding CoronavirusState and Local Fiscal Recovery Funds, and Utah Code § 63J-4-801, *et seq*.

c. Funds provided through this agreement are considered to be federal financial assistance subject tothe Single Audit Act (31 U.S.C. §§ 7501-7507) and the related provisions of the Uniform Guidance, 2 C.F.R. § 200.303 regarding internal controls, §§ 200.330 through 200.332 regarding subrecipient monitoring and management, and subpart F regarding audit requirements. The CFDA number assigned to the CRF is 21.027, pending completion of registration by the federal government.

d. Grantee acknowledges and agrees that that the State is subject to reporting requirements regarding the use of the Local Assistance Monies and that the State may be subject to recoupmentby/to the United States Treasury for amounts that are not expended for eligible uses. Any use of awarded funding by Grantee that is contrary to the agreed upon project parameters or federal regulations will be subject to project cancellation and recoupment of awarded funds. See section 5 for additional information regarding recoupment of funds.

e. Grantee may not loan, grant, or collateralize the Local Assistance Monies.

5. RECOUPMENT OF FUNDS

If state or federal audit findings determine that any funds expended by the Grantee violate the terms of this Agreement, the Grantee shall provide funds to the state sufficient to meet such repayment request(s).The Grantee assumes responsibility for ensuring compliance of all

subgrantees. The Grantee is to be heldresponsible for the repayment of funds expended by any subgrantees which violates the terms of this Agreement. If the Grantee is unwilling or unable to repay the funds, the repayment request amount will become a past due obligation of the Grantee to the State and may be collected as such.

6. **PERIOD OF PERFORMANCE**
The period of performance for this award begins on the date hereof and ends on December 31, 2026. Asset forth in the U.S. Department of the Treasury's implementing regulations, Grantee may use award funds to cover eligible costs incurred during the period that begins on March 3, 2021, and ends on December 31, 2024, as long as the award funds for the obligations incurred by December 31, 2024 are expended by December 31, 2026.

7. **PERFORMANCE MEASURES**
The Grantee agrees to establish and maintain performance measures for the project and to report on themin compliance with ATTACHMENT C: SCOPE OF WORK.

8. **REPORTING ON THE USE OF FUNDS**
The Grantee agrees to the reporting requirements as explained in ATTACHMENT B: REPORTING REQUIREMENTS.

9. **GRANTEE MONITORING**
The Grantee agrees to comply with monitoring by the State of all programmatic and financial activity in relation to the approved project. Post-award monitoring may be conducted to determine the Grantee's progress towards implementing the planned award activities, review compliance with relevant laws and regulations, and provide technical assistance as needed. The Grantee assumes responsibility for ensuring the relevant copies of all reports and correspondence are maintained and are accurate and complete. If Grantee awards funds to SubGrantees, they assume responsibility for all monitoring and compliance of allprogrammatic and financial activity of said SubGrantee.

10. **LAWS AND REGULATIONS:**
    a. During the term of this Agreement, Grantee will comply with all applicable federal and State constitutions, laws, rules, codes, orders, and regulations, including applicable licensure and certification requirements and including but not limited to American Rescue Plan Act of 2021, Public Law 117–2, codified at 42 U.S.C. 802 *et seq*., Section 603 of the Social Security Act, 31 C.F.R. Part 35, and the U.S. Department of the Treasury's Interim Final Rule and any final rule(s) regarding Coronavirus State and Local Fiscal Recovery Funds, and Utah Code § 63J-4-801, *et seq*.
    b. Grantee understands and agrees to comply with applicable provisions of Utah Code § 51-2a-102, -201, and -301. Before receiving any Local Assistance Monies, Grantee shall provide all documentation required by the sections of the Utah Code referenced in this section. Grantee acknowledges that the State is bound by the provisions referenced in this section, and may withhold or demand return of Local Assistance Monies if the Grantee fails to comply with any provisions of these sections of the Utah Code, as amended. Grantee shall provide to the State, in aform and manner prescribed by the State, an itemized report at least semiannually detailing the expenditure of Local Assistance Monies.

11. **RECORDS ADMINISTRATION:** Grantee shall maintain or supervise the maintenance of all records, receipts and any other documentation necessary to properly account for: (i) payments made by the State toGrantee under this Agreement; (ii) Grantee's performance of this

Agreement terms and milestones; and
(iii) outcomes reported to the State by Grantee. Grantee shall retain these records for at least six (6) yearsafter final payment, or until all audits initiated within the six (6) years have been completed, whichever islater. Grantee shall allow, at no additional cost, State of Utah and federal auditors, State staff, and/or a party hired by the State, access to all records necessary to account for all Local Assistance Monies
received by Grantee as a result of this Agreement and to verify that Grantee's use of the Local AssistanceMonies is appropriate and has been properly reported.

12. **CONFLICT OF INTEREST:** Grantee represents that no material conflict of interest exists in relation toits receipt of Local Assistance Monies under this Agreement and that none of Grantee's officers or employees are officers or employees of the State of Utah, unless full and complete disclosure has been made to the State.

13. **INDEPENDENT CAPACITY:** Grantee and SubGrantees, in the performance of this Agreement, shallact in an independent capacity and not as officers, employees, or agents of the State.

14. **EMPLOYMENT PRACTICES:** Grantee shall abide by federal and State employment laws, including: (i) Title VI and VII of the Civil Rights Act of 1964 (42 U.S.C. 2000e) which prohibits discrimination against any employee or applicant for employment or any applicant or recipient of services, on the basis of race, religion, color, or national origin; (ii) Executive Order No. 11246, as amended, which prohibits discrimination on the basis of sex; (iii) 45 C.F.R. 90 which prohibits discrimination on the basis of age; (iv) Section 504 of the Rehabilitation Act of 1973, or the Americans with Disabilities Act of 1990 which prohibits discrimination on the basis of disabilities; and (v) Utah's Executive Order, dated December 13, 2006, which prohibits unlawful harassment in the workplace. Grantee shall further abide by any other laws, regulations, or orders that prohibit the discrimination of any kind by any of Grantee's employees.

15. **AMENDMENTS:** The parties may amend this Agreement only by mutual written agreement, which amendment will be attached to this Agreement. Automatic renewals will not apply to this Agreement evenif listed elsewhere in this Agreement.

16. **TERMINATION:** Unless otherwise stated in this Agreement, either party may terminate this Agreementwith or without cause and upon written notice to the other party, at any time prior to the date on which theState disburses any of the Local Assistance Monies to Grantee. Under this section, "cause" means, without limitation, any material violation of the terms of the program or this Agreement. This agreement may only be terminated after the State disburses any of the Local Assistance Monies to Grantee if the Grantee returns all of the Local Assistance Monies that have been disbursed.

17. **NOTICE OF CHANGE OR REORGANIZATION:** If a change or reorganization occurs which affects Grantee's ability to perform under this Agreement, Grantee shall immediately notify the State. Changes ororganizations that require notification to the State include, but are not limited to the following:
    a. Material change in the amount of type of facilities, assistance, or staff Grantee provides tofacilitate this Agreement; or
    b. Any other change or reorganization that Grantee reasonably expects would be of interest or valueto the State in the administration of this Agreement.

18. **NONAPPROPRIATION OF FUNDS, REDUCTION OF FUNDS, OR CHANGES IN**

LAW: Upon thirty (30) days written notice delivered to Grantee, the State may terminate this Agreement, in whole or in part, if the State determines that: (i) a change in Federal or State legislation or applicable laws materially affects the ability of either party to perform under the terms of this Agreement; or (ii) a changein available funds affects the State's ability to pay under this Agreement. A change of available funds as used in this section, includes, but is not limited to, a change in Federal or State funding, whether as a result of a legislative act or by order of the President or the Governor.

19. **WORKERS COMPENSATION INSURANCE:** Grantee shall maintain, during the term of this Agreement, workers' compensation insurance for all its employees, as well as any SubGrantees asrequired by law.

20. **REVIEWS:** The State may perform reviews, and/or comment upon Grantee's use of the Local AssistanceMonies. Such reviews will not waive the requirement of Grantee to meet all the terms and conditions of this Agreement.

21. **ASSIGNMENT:** Grantee may not assign, sell, transfer, subagreement or sublet rights, or delegate anyright or obligation under this Agreement, in whole or in part, without the prior written approval of the State. Grantee may not loan, grant, or collateralize the Local Assistance Monies.

22. **PUBLIC INFORMATION:** This Agreement and invoices will be public records in accordance with GRAMA. Grantee gives the State express permission to make copies of this Agreement, related documents, and invoices, available in accordance with GRAMA. Except for sections identified in writingby Grantee and expressly approved by the State of Utah Division of Purchasing and General Services, all of which must be in accordance with GRAMA, Grantee also agrees that non-protected portions of Grantee's Application will be a public document, and copies may be given to the public as permitted under GRAMA. The State is not required to inform Grantee of any GRAMA requests for disclosure ofthis Agreement, related documents, or invoices.

23. **NON-PUBLIC INFORMATION:** If Non-Public Information is disclosed to Grantee, Grantee shall: (i)advise its agents, officers, employees, partners, and SubGrantees of the obligations set forth in this Agreement; (ii) keep all Non-Public Information strictly confidential; and (iii) not disclose any Non- Public Information received by it to any third parties. Grantee will promptly notify the State of any potential or actual misuse or misappropriation of Non-Public Information. Grantee shall be responsible for any breach of this duty of confidentiality, including any required remedies and/or notifications under applicable law. Upon termination or expiration of this Agreement and upon request by the State, Granteewill return all copies of Non-Public Information to the State or certify, in writing, that the Non-Public Information has been destroyed. This duty of confidentiality will be ongoing and survive the terminationor expiration of this Agreement.

24. **INDEMNITIES:**
    a. **For Governmental Entity Grantees:** Both parties to this Agreement are governmental entities as defined in the Utah Governmental Immunity Act (Utah Code § 63G-7-101 *et. seq.*). Nothing inthis Agreement will be construed as a waiver by either or both parties of any rights, limits, protections or defenses provided by the Utah Governmental Immunity Act. Nor shall this Agreement be construed, with respect to third parties, as a waiver of any governmental immunityto which a party to this Agreement is otherwise entitled. Subject to and consistent with the Utah Governmental

Immunity Act, each party is responsible for its own actions or negligence and will defend against any claim or lawsuit brought against it. There are no indemnity obligations between these parties, except for indemnification for infringement and indemnification for breachof duty of confidentiality as specified in this section.

b. **Indemnification for Infringement:** Grantee indemnifies and holds the State harmless from and against any and all damages, expenses (including reasonable attorneys' fees), claims, judgments, liabilities, and costs in any action or claim brought against the State for infringement of a third party's copyright, trademark, trade secret, or other proprietary right. If there are any limitations ofGrantee's liability, such limitations of liability will not apply to this section.

c. **Indemnification for Breach of Duty of Confidentiality:** As permitted by law, Grantee indemnifies, holds harmless, and will defend the State, including anyone for whom the State isliable, from claims related to a breach of the duty of confidentiality,including any notification requirements, by Grantee or anyone for whom Grantee is liable.

25. **OWNERSHIP IN INTELLECTUAL PROPERTY:** Each party recognizes that it has no right, title, orinterest, proprietary or otherwise, in the intellectual property owned or licensed by the other party, unlessotherwise agreed upon by both parties in writing.

26. **PUBLICITY:** Grantee shall submit to the Division for written approval all advertising and publicity matters relating to this Agreement. The Division may, at its sole discretion, provide approval, which must be in writing. If the State provides approval for advertising or publicity, Grantee shall give recognition and credit to the State of Utah in Advertising or public notice, at least in the form of a public acknowledgement of the receipt of Local Assistance Monies.

27. **WAIVER:** A waiver of any right, power, or privilege will not be construed as a waiver of any subsequentright, power, or privilege.

28. **ORDER OF PRECEDENCE:** In the event of any conflict in the terms and conditions in this Agreement,the order of precedence shall be: (i) this Attachment C; (ii) STATE OF UTAH – SOUTHERN UTAH REUSE GRANT PROGRAM GRANT AGREEMENT with signature(s); (iii)
Attachment B regarding reporting; (iv) the State's additional terms and conditions, if any; (v) any other document listed or referenced in Agreement; and then (vi) Grantee's terms and conditions that are attached to this Agreement, if any. Any provision attempting to limit the liability of Grantee or the rightsof the State must be in writing and attached to this Agreement, or the provision will be void.

29. **GOVERNING LAW AND VENUE:** This Agreement is governed by the laws, rules, and regulations ofthe State of Utah. Any action or proceeding arising from this Agreement will be brought in a court of competent jurisdiction in the State of Utah. Venue will be in Salt Lake City, in the Third Judicial DistrictCourt for Salt Lake County.

30. **SURVIVAL OF TERMS:** Termination or expiration of this Agreement will not extinguish or prejudicethe State's right to enforce this Agreement with respect to any default or defect in the Services that has not been cured.

31. **SEVERABILITY:** The invalidity or unenforceability of any provision, term, or condition of this Agreement will not affect the validity or enforceability of any other provision, term, or condition of thisAgreement, which will remain in full force and effect.

32. **ENTIRE AGREEMENT:** This Agreement constitutes the entire agreement between the parties and supersedes any and all other prior and contemporaneous agreements and understandings between theparties, whether oral or written.

(Revision date: 24 January 2023)

ATTACHMENT D:
FFATA CERTIFICATION
(Not required for State Agencies and Compnet Units)

Organization Name (Grantee): _____

SAM UEI Number: _____

Federal Funding Accountability and Transparency Act of 2006 requires that the Grantee report the namesand total compensation of the Grantee's five most highly compensated executives, if the following requirements are met.

In the Grantee's preceding completed fiscal year, did the Grantee receive:

1. 80 percent or more of the Grantee's annual gross revenues in U.S. federal contracts, subcontracts,loans, grants, subgrants, and/or cooperative agreements; and
2. $25,000,000 or more in annual gross revenues from U.S. federal contracts, subcontracts, loans,grants, subgrants, and/or cooperative agreements?

☐ NO: Skip to Attestation below
☐ YES: Continue, complete Executive Compensation and Attestation below

Executive Compensation

	Name	Title	Total Compensation Level
1			
2			
3			
4			
5			

*Total compensation means the cash and noncash dollar value earned by the executive during theGrantee's preceding fiscal year and includes the following (for more information see 17 C.F.R. 229.402(c)(2)):

1. Salary and bonus.
2. Awards of stock, stock options, and stock appreciation rights. Use the dollar amount recognizedfor financial statement reporting purposes with respect to the fiscal year in accordance with the Statement of Financial Accounting Standards 2 C.F.R. 200 (Revised 2004) (FAS 123R), Shared Based Payments.
3. Earnings for services under non-equity incentive plans. This does not include group life, health,hospitalization or medical reimbursement plans that do not discriminate in favor of executives, and are available generally to all salaried employees.
4. Change in pension value. This is the change in present value of defined benefit and actuarialpension plans.
5. Above-market earnings on deferred compensation which is not tax-qualified.
6. Other compensation, if the aggregate value of all such other compensation (e.g. severance, termination payments, value of life insurance paid on behalf of the employee, perquisites orproperty) for the executive exceeds $10,000.

Attestation

By signing, you attest that the Grantee information and certification provided above is true and correct. Knowingly providing false or misleading information may result in criminal or civil penalties as per Title 18, Section 1001 of the US Criminal Code.

Signature of Chief Executive Officer or Designee: _____

Name:

Title:

Date:

Equal Opportunity Employer/Program

Auxiliary aids and services are available upon request to individuals with disabilities by calling 801-526-9240. Individuals who are deaf, hard of hearing, or have speech impairments may call Relay Utah by dialing 711. Spanish Relay Utah: 1-888-346-3162.

ATTACHMENT E : DISBURSEMENT REQUEST FORMS

EXHIBIT E-1

WRITTEN AUTHORIZATION AND REQUEST FOR REIMBURSEMENT

TO: The Division of Water Quality (Division).

DATE: _____

WRITTEN REQUEST NO.: _____

I, the undersigned authorized officer of _____, (the "Entity"), do hereby certify and request to the Division as follows:

1. Pursuant to the provisions of the Grant Agreement by and between the Entity and the Division dated _____, (the "Grant Agreement"), the undersigned hereby authorizes and requests a reimbursement to pay the amounts shown on the attached Payment Schedule.

2. Each payment proposed to be made as set forth on the Payment Schedule has been incurred and is a proper charge against the Grant Agreement.

3. To the extent that the payment of any item set forth on the Payment Schedule is for other than work, materials, equipment or supplies, in connection with this authorization and request, the undersigned certifies that each payment proposed to be made on the Payment Schedules is a proper charge against the Grant Agreement, is a reasonable amount and has not been heretofore included in a prior Written Authorization and Request for Reimbursement for the Grant Agreement.

4. This Written Authorization and Request, including the Payment Schedule attached hereto, shall be conclusive evidence of the facts and statements set forth herein.

5. A copy of this Written Authorization and Request is being kept on file in the official records of the Entity.

The terms used herein, which are defined in the Grant Agreement, shall have the respective meanings therein assigned to them.

Entity: _____

Signature: _____

Title: _____

EXHIBIT E-2

I/we, the undersigned authorized officer(s) of the State, do hereby certify and request to the Division as follows:

1. I/we have reviewed the foregoing statements of the authorized officer of the Entity attached hereto, and on behalf of the State approve the request for payment from the Fund made therein; provided that the State has not independently verified the statements of such authorized officer of the Entity attached hereto and makes no representations or certifications with respect thereto.

2. A copy of this Written Authorization and Request is being kept on file in the official records of the State.

The terms used herein shall have the same meanings assigned to them in the attached statements of the authorized officer of the Entity.

Dated the date appearing at the top of the attached statements of the authorized officer of the Entity.

State: Utah Division of Water Quality

Signature: _____

Title: _____

EXHIBIT E-3

REIMBURSEMENT SCHEDULE

Check No.	Person or Firm	Amount	Purpose

Reimbursement for the above listed payments totaling $_____ is to be made to _____ ("Entity") by transfer of funds.

Contact person at time of funds transfer: _____
(name)
(phone #)