ADMINISTRATIVE COMMITTEE

Monday, August 1, 2016
5:00 p.m.

NOTICE IS HEREBY GIVEN that the Bountiful City Administrative Committee will hold its regular meeting in the Conference Room at City Hall, 790 South 100 East, Bountiful, Utah, at the time and on the date given above. The public is invited. Persons who are disabled as defined by the Americans with Disabilities Act may request an accommodation by contacting the Bountiful City Planning Office at 298-6190. Notification at least 24 hours prior to the meeting would be appreciated.

AGENDA

1. Welcome and Introductions.

2. Consider approval of minutes for July 26, 2016.

3. **PUBLIC HEARING:** Consider approval of a Conditional Use Permit to allow for Solar Panels at 827 East 750 North, David Demille, applicant.

4. **PUBLIC HEARING:** Consider approval of a Conditional Use Permit to allow for a Home Occupation Handyman Contractor Business at 1640 South 200 West, Jonathan Graf, applicant.

5. **PUBLIC HEARING:** Consider approval of a Conditional Use Permit to allow for Solar Panels at 920 East 1500 South, Scott and Maren Randall, applicants.

6. Consider approval of a Conditional Use Permit, in written form, to allow for Solar Panels at 447 East 1700 South, Kelly Barnett, applicant.

7. Miscellaneous business and scheduling.

Chad Wilkinson, City Planner

Pending minutes have not yet been approved by the Administrative Committee and are subject to change until final approval has been made.

Bountiful City
Administrative Committee Minutes
July 26, 2016

Present: Chairman – Chad Wilkinson; Committee Members – Lloyd Cheney and John Marc Knight; Recording Secretary – Julie Holmgren

Excused: Assistant Planner – Andy Hulka

1. **Welcome and Introductions.**

   Chairman Wilkinson opened the meeting at 4:58 p.m. and introduced all present.

2. **Consider approval of minutes for July 18, 2016.**

   Mr. Knight made a motion to approve the minutes for July 18, 2016. Mr. Cheney seconded the motion.

   A Mr. Wilkinson
   A Mr. Cheney
   A Mr. Knight

   Motion passed 3-0.

3. **PUBLIC HEARING: Consider approval of a Conditional Use Permit to allow for Solar Panels at 447 East 1700 South, Kelly Barnett, applicant.**

   Casey Winger (Intermountain Wind & Solar) and Cherie Barnett were present.

   Chad Wilkinson presented a summary of the staff report (the full staff report follows).

   The property where the solar panels are to be installed is located in the R-4 Single Family Zone. Solar power panels are classified in the city ordinance as "private power plants" and require a conditional use permit if they are over 10 watts. The applicant has indicated that the photovoltaic system to be installed will produce 9.92 kilowatts (9,920 watts), requiring a conditional use permit.

   The application submitted indicates the proposed installation of 2 photovoltaic arrays with a total of 31 panels. The arrays will occupy approximately 545 square feet, which is smaller than the 50% maximum roof coverage. The arrays will be located on the east and west facing portions of the roof on the back of the house. The east facing array will include 12 panels in 2 rows. The west facing roof will include 19 panels in 2 rows. The roof is of truss construction and has a slope of 4:12. The applicant has indicated that the asphalt shingles are 7 years old

Pending

and in good condition. The panels will be connected to the roof with an Invisimount racking system. A review of information provided in the application indicates that all engineering requirements for the construction of solar panels in Bountiful City will be met. A reflection analysis of the roof pitch indicates that photovoltaic panels should not produce a reflection nuisance to surrounding properties.

Based on the findings, staff has determined that the applicant would comply with all requirements for the conditional use permit. Staff recommends approval of the conditional use permit with the following conditions:

1. The applicant shall obtain a building permit.
2. The panels must be installed only as proposed in the application.
3. This conditional use permit is solely for this site and is non-transferable.

Mr. Wilkinson explained a preliminary concern regarding panels being placed on the south facing roof because of potential impact on neighbors, but as he reviewed the plans it became apparent this would not be an issue.

PUBLIC HEARING: Chairman Wilkinson opened and closed the Public Hearing at 5:01 p.m. with no comments from the public.

Mr. Knight made a motion for approval of a Conditional Use Permit to allow for Solar Panels at 447 East 1700 South, Kelly Barnett, applicant. Mr. Cheney seconded the motion.

A Mr. Wilkinson
A Mr. Cheney
A Mr. Knight

Motion passed 3-0.

4. **Consider approval of a Conditional Use Permit, in written form, to allow for Solar Panels at 671 East 350 North, Eric Blood, applicant.**

Mr. Cheney made a motion for approval of a Conditional Use Permit, in written form, to allow for Solar Panels at 671 East 350 North, Eric Blood, applicant. Mr. Knight seconded the motion.

A Mr. Wilkinson
A Mr. Cheney
A Mr. Knight

Motion passed 3-0.

Pending

<u>Pending minutes have not yet been approved by the Administrative Committee and are subject to change until final approval has been made.</u>

5. **Miscellaneous business and scheduling.**

   Mr. Wilkinson ascertained there were no further items of business. The meeting was adjourned at 5:03 p.m.

_____
Chad Wilkinson, City Planner

Pending

MAYOR
RANDY LEWIS

CITY COUNCIL
RICHARD HIGGINSON
BETH HOLBROOK
JOHN M. (MARC) KNIGHT
KENDALYN HARRIS
JOHN PITT

CITY MANAGER
GARY R. HILL

Memo

Date: July 20, 2016
To: Administrative Committee
From: Andy Hulka, Assistant Planner
Re: Staff Report for the Administrative Committee Meeting on Monday, August 1, 2016

Overview

3. PUBLIC HEARING - Consider approval of a Conditional Use Permit to allow for Solar Panels at 827 East 750 North, David Demille, applicant.

Item #3

Background

The property where the solar panels are to be installed is located in the R-4 Single Family Zone. Solar power panels are classified in the city ordinance as "private power plants" and require a conditional use permit if they are over 10 watts. The applicant has indicated that the photovoltaic system to be installed will produce 5.89 kilowatts (5,890 watts), requiring a conditional use permit.

Findings

The application submitted indicates the proposed installation of 2 photovoltaic arrays with a total of 18 panels. The arrays will occupy approximately 292 square feet, which is smaller than the 50% maximum roof coverage. The arrays will be located on south and east facing portions of the roof. The south facing array will include 5 panels in 2 rows. The east facing array will include 13 panels in 2 rows. The roof is of truss construction and has a slope of 2:12. The applicant has indicated that the asphalt shingles are 5 years old and in good condition. The panels will be connected to the roof with a Sun Power Invisimount and Sun Modo mount system. A review of information provided in the application indicates that all engineering requirements for the construction of solar panels in Bountiful City will be met. A reflection analysis of the roof pitch indicates that photovoltaic panels should not produce a reflection nuisance to surrounding properties.

Staff Recommendation

Based on the findings, staff has determined that the applicant would comply with all requirements for the conditional use permit. Staff recommends approval of the conditional use permit with the following conditions:

1. The applicant shall obtain a building permit.
2. The panels must be installed only as proposed in the application.
3. This conditional use permit is solely for this site and is non-transferable.

Bountiful Land Use Ordinance

14-14-126 PRIVATE POWER PLANTS

A. A "Private Power Plant" is any device or combination of devices not owned and operated by a regulated utility company, which convert mechanical or chemical energy into electricity. A private power plant with a peak power generation capacity of 10 Watts/12v/500mAmp (or equivalent) is exempt from the provisions of this Section. A private power plant, including a windmill or wind turbine, shall not be permitted within Bountiful City limits, with the following exceptions:

1. A back-up power generator running on unleaded gasoline, diesel, natural gas, propane, or hydrogen fuel cell, rated for a single structure or building lot, located in accordance with the requirements of the zone in which it is located.
2. A photovoltaic cell array or other passive solar energy system located in accordance with the requirements for occupied structures for the zone in which it is located.

B. With the exception of a back-up power generator, no private power plant may be installed or used on any property unless a conditional use permit has been issued for the specific power generation device.

C. A private power plant is not exempt from the height requirements of the Zone in which it is located, and shall be considered an occupied structure for the purposes of calculating height.

D. Solar energy design standards and requirements

1. Solar energy panels or collectors that are mounted to the roof shall:
   a. Not extend beyond the roofline.
   b. Not reflect sunlight onto neighboring windows or rights-of-way.
   c. Not exceed fifty (50) percent of the total roof area.
   d. Shall be maintained in good condition.
2. Prior to installation, use, and connection to the grid, the following shall be done:
   a. A Conditional Use Permit shall be issued
   b. A Building Permit shall be issued
   c. The Power Department shall approve the application for net metering
   d. The Power Department shall approve the physical installation

827 East 750 North

BOUNTIFUL
EST. 1847

For Office Use Only
Date Rec'd 7/18/16
Admin Date 8/1/16
Application $ 50.00

SOLAR PANEL - CONDITIONAL USE PERMIT APPLICATION

PROPERTY OWNER INFORMATION:

Property Owner Name(s): David Demille

Property Address: 827 E 750 N Bountiful

Property Owner Phone Number: 801-644-5183

Property Owner E-Mail: ddhomepro@gmail.com

*(Property Owner(s) - please sign **Authorization and Affidavit** on page 2)*

SOLAR CONTRACTOR INFORMATION:

Solar Company Name: Legend Electric

Company Address: 204 Playa Della Rosita, Washington UT 84780

Company Phone Number: 801-792-9369

Contact Person for Solar Project: Monique Gierhart

E-Mail Address: monique@legendsolar.com

1. **Please include the following with your application:**

☑ **$50.00 Fee**: Conditional Use Permit Application (Administrative Committee)

☑ **SITE PLAN**: Two (2) 11"x17" sized sets of the proposed site plan drawn at 1:10 scale or as required by the City Engineer and City Planner. A site plan shall include:

- Plan view (bird's-eye) of site with placement of solar panels.
- A north arrow, the scale of the drawing, and the date of the drawing.
- Street names and addresses.

FOR GROUND-MOUNTED SOLAR ARRAYS, THE FOLLOWING:

- Property lines with dimensions.
- All sidewalks, driveways, curbs and gutter, and parking areas.
- All existing easements, rights-of-way, and any other restrictions on the use of the property.
- Existing buildings, proposed buildings, and other significant features on the site.
- Existing buildings and significant features located on adjacent properties within 50 feet (50') of the subject property boundaries.
- When required by the City Planner or City Engineer, and for all new construction, a survey including both existing and proposed contours of the land at intervals of two feet (2') or better.

☑ **ONE-LINE DIAGRAM** (or electrical diagram or block diagram): Two (2) 11" x 17" sets (diagram must follow Bountiful City Light & Power sample diagram included in the solar packet – attachment 2, page 3).

☑ **ENGINEER ANALYSIS LETTER** (including an analysis of the existing roof structure with added solar equipment and uplift resistance)

☑ **COMPLETED SOLAR PACKET FORMS:**

☐ Solar Panel Questions
☐ Photovoltaic System Net Metering Requirements (signed by property owner)
☐ Bountiful City Light & Power - diagram form
☐ Building Permit Application

☑ **SPEC SHEETS:** Solar product information

☑ **PHOTO:** Electrical service (meter main with disconnect)

2. **Property Owner Authorization and Affidavit**

The undersigned, being duly sworn, depose that I am (we are) the owner(s) of the property involved in this application and that the statements contained herein and by attachment, are to the best of my (our) knowledge true and correct.

DocuSigned by:

Property Owner

Property Owner

BOUNTIFUL
EST. 1847

MAYOR
Randy C. Lewis
CITY COUNCIL
Kendalyn Harris
Richard Higginson
Beth Holbrook
John M. Knight
John Pitt
CITY MANAGER
Gary Hill

SOLAR PANEL QUESTIONS

Please completely answer all questions (do not simply refer to an attachment)

Size of Array	
Array Dimensions Total Number of Panels Total rating of photovoltaic system:	292 sq ft 18 5.89 KW
Mounting Location	
Roof/Wall/Other	Roof
Roof Pitch (Rise/Run e.g. "5/12")	2/12
Roofing Material Asphalt Shingle/Tile/Steel/Other Age & Condition of Shingles	Asphalt Shingle 5yrs / Good Condition
Roof Construction Rafter/Truss/Joist	Truss
Engineering Analysis	
Connection to Roof	SunPower Invisimount + sun mado
Analysis of Existing Roof Structure with added Solar Equipment	"Installation of solar panels on this existing roof will not adversely affect the structure of this house"
Adequate Uplift Resistance (120 mph Exp B)	155

UTAH OFFICES
Sandy
Layton
St. George

Project Number: U1675-0831-161

July 14, 2016

Legend Solar
3292 E Deseret Dr.
Bld A Ste. 101B
St. George UT 84790

REFERENCE: David DeMille Residence: 827 East 750 North, Bountiful, UT 84010
Solar Panel Installation

To whom it may concern:

Per the provided request, we have reviewed the attached layout relating to the installation of solar panels at the above-referenced site.

Based upon our review, it is our conclusion that the installation of solar panels on this existing roof will not adversely affect the structure of this house. The design of solar panel supporting members and connections is by the manufacturer and/or installer. The adopted building code in this jurisdiction is the International Building Code, 2015 Edition and ASCE 7-10. Appropriate design parameters which must be used in the design of the solar panel supporting members and connections are listed below:

- Ground snow load: 43 psf per Utah amendments to the IBC (verify with local building department)
- Design wind speed for risk category II structures: 155 mph (3-sec gust)
- Wind exposure: Category C

If using documents referencing ASCE 7-05, the design wind speed may be converted to an ASCE 7-05 equivalent of 90 mph, Exposure C.

Our conclusion regarding the adequacy of the existing roof is based on the fact that the additional weight related to the solar panels is less than 3 pounds per square foot. In the area of the solar panels, no 20 psf live loads will be present. Regarding snow loads, it is our conclusion that since the panels are slippery and dark, effective snow loads will likely be reduced in the areas of the panels. Regarding wind loads, we conclude that any additional forces will be negligible due to the low profile of the flush-mounted panel system. Regarding seismic loads, we conclude that any additional forces will be small. With an assumed roof dead load of 15 psf, solar panel dead load of 3 psf, and affected roof area of 40% (maximum), the additional dead load (and consequential seismic load) will be 8.3%. This calculation conservatively neglects the weight of wall dead load. Because the increase is less than 10%, this alteration meets the requirements of the exception in Section 807.5 of the 2015 International Existing Building Code. Thus the existing structure is permitted to remain unaltered.

During design and installation particular attention must be paid to the maximum allowable spacing of attachments and the location of solar panels relative to roof edges. The use of solar panel support span tables provided by the manufacturer is allowed only where the building type, site conditions, and solar panel configuration match the description of the span tables. Attachments to existing roof joist or rafters must be staggered so as not to overload any existing structural member. Waterproofing around the roof penetrations is the responsibility of others. Electrical engineering is beyond our scope. All work performed must be in accordance with accepted industry-wide methods and applicable safety standards. Vector Structural Engineering assumes no responsibility for improper installation of the solar panels.

Please note that a representative of Vector Structural Engineering has not physically observed the roof framing of this home. Our conclusions are based upon the assumption that all structural roof components and other supporting elements are in good condition and are sized and spaced such that they can resist standard roof loads.

Very truly yours,

VECTOR STRUCTURAL ENGINEERING, LLC

PROFESSIONAL STRUCTURAL ENGINEER
No. 5150370
BRETT D. VEAZIE
STATE OF UTAH

Brett D. Veazie, P.E.
Project Engineer

Enclosure
BDV/mrh

July 14, 2016

DAVID DeMILLE RESIDENCE

EXISTING METER,
NEW AC COMBINER
PANEL, AND PV
MONITOR LOCATION

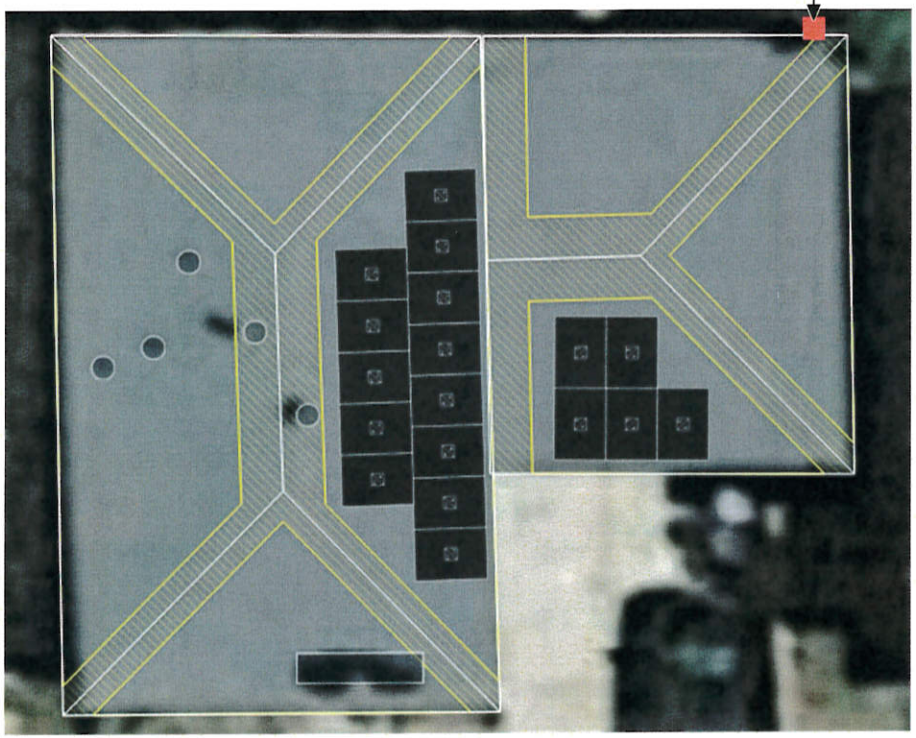

N

General Notes:

1. CODE COMPLIANCE:
   NEC 2014
   IFC 2012
   IRC 2012

2. INSTALLEGC FROM MAIN TO ARRAYS PER NEC 690.43

3. ALL SIGNAGE SHALL BE IN ACCORDANCE OF NEC 110.21(B)

4. ALL WIRING MUST BE PROPERLY SUPPORTED BY DEVICES OR MECHANICAL MEANS DESIGNED AND LISTED FOR SUCH USE.**PV WIRES MUST NOT TOUCH THE ROOF.**

5. CLEARANCES FOR INVERTERS SHALL BE IN ACCORDANCE ON NEC 110.26

6. BACK-FED BREAKERS TO BE INSTALLED AT OPPOSITE END OF BUSBAR INPUT FEEDERS.

7. RACEWAYS CONTAINING DC CIRUITS SHALL BE MARKED "PHOTOVOLTAIC POWER SOURCE" EVERY 10'.

8. DC LINE MUST BE A MINIMUM OF 12" FROM ROOF DECKING.

9. WIRING AT ARRAYS SHALL BE PV TYPE AS PER NEC 690.35(D)

10. PV MODULES SHALL NOT BE INSTALLED OVER ANY ATTIC VENTS INCLUDING PLUMBING, FURNACE, WATER HEATER, ECT.

LEGEND SOLAR

204 PLAYA DELLA ROSITA
WASHINGTON, UT 84780
435.319.4060
UT LIC #9406211-5501

Project: DAVID DeMILLE 801-499-0464

Address: 827 E 750 N BOUNTIFUL, UT. 84010

Date: 7/15/2016

Design: MEB

DeMILLE RESIDENCE
5.89KW PV SOLAR SYSTEM

JOSEPH E. BARLOW

Title: SITE PLAN

Sheet: 1/2

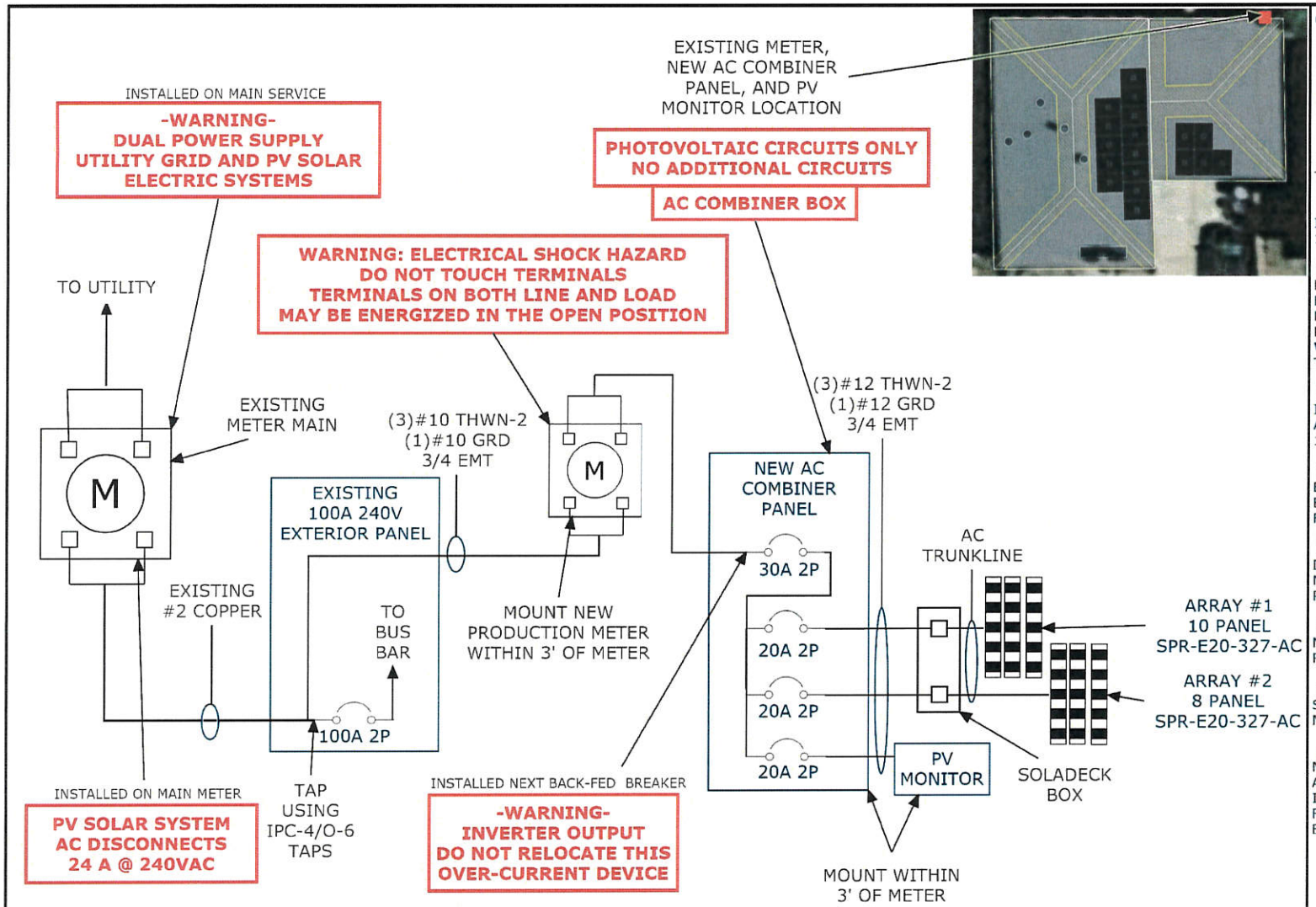

General Notes:

1. CODE COMPLIANCE:
   NEC 2014
   IFC 2012
   IRC 2012
2. INSTALLEGC FROM MAIN TO ARRAYS PER NEC 690.43
3. ALL SIGNAGE SHALL BE IN ACCORDANCE OF NEC 110.21(B)
4. ALL WIRING MUST BE PROPERLY SUPPORTED BY DEVICES OR MECHANICAL MEANS DESIGNED AND LISTED FOR SUCH USE **PV WIRES MUST NOT TOUCH THE ROOF.**
5. CLEARANCES FOR INVERTERS SHALL BE IN ACCORDANCE ON NEC 110.26
6. BACK-FED BREAKERS TO BE INSTALLED AT OPPOSITE END OF BUSBAR INPUT FEEDERS.
7. RACEWAYS CONTAINING DC CIRUITS SHALL BE MARKED "PHOTOVOLTAIC POWER SOURCE" EVERY 10'.
8. DC LINE MUST BE A MINIMUM OF 12" FROM ROOF DECKING.
9. WIRING AT ARRAYS SHALL BE PV TYPE AS PER NEC 690.35(D)
10. PV MODULES SHALL NOT BE INSTALLED OVER ANY ATTIC VENTS INCLUDING PLUMBING, FURNACE, WATER HEATER, ECT.

LEGEND SOLAR
204 PLAYA DELLA ROSITA
WASHINGTON, UT 84780
435.319.4060
UT LIC #9406211-5501

Project: DAVID DeMILLE 801-499-0464

Address: 827 E 750 N BOUNTIFUL, UT. 84010

Date: 7/15/2016

Design: MEB

DeMILLE RESIDENCE
5.89KW PV SOLAR SYSTEM

ROOF NOTES:
1. ROOF MOUNTS 48" STAGGERED

Title: 1-LINE DIAGRAM

Sheet: 2/2

MAYOR
RANDY LEWIS

CITY COUNCIL
RICHARD HIGGINSON
BETH HOLBROOK
JOHN M. (MARC) KNIGHT
KENDALYN HARRIS
JOHN PITT

CITY MANAGER
GARY R. HILL

Memo

Date: July 20, 2016
To: Administrative Committee
From: Andy Hulka, Assistant Planner
Re: Staff Report for the Administrative Committee Meeting on Monday, August 1, 2016

Overview

4. **PUBLIC HEARING -** Consider approval of a Conditional Use Permit to allow for a Home Occupation Handyman Contractor Business at 1640 South 200 West, Jonathan Graf, applicant.

Item #4

Background

The property where the Home Occupation Handyman Contractor Business is proposed is located in the RM-19 Multi-Family Zone. Home Occupation Contractor Businesses in this zone are classified in the City Ordinance as requiring a Conditional Use Permit.

Findings

The application submitted indicates that the property will be used for a handyman business. The applicant uses a pickup truck for the business, which will be parked on the driveway in front of the home. The applicant will store paint and basic hand and power tools in the enclosed space behind the carport. There will be no employees working on site. The applicant has indicated that no work will be performed on site, no product will be sold from the property, and no customers will visit the site. There will be no signage on the property associated with the business. The use appears to be incidental and secondary to the use of the dwelling and shall not change the appearance, character, or condition of the property.

Staff Recommendation

Based on the findings, staff has determined that the applicant would comply with all requirements for the conditional use permit. Staff recommends approval of the Conditional Use Permit with the following conditions:

1. The applicant shall maintain an active Bountiful City business license.
2. The Home Occupation will not create nuisances discernible beyond the premises (e.g. noise, dust, fumes, glare, traffic, etc.).

3. The use will comply with all applicable fire, building, plumbing, electrical, and life safety and health codes in the State of Utah, Davis County, and Bountiful City.
4. The Conditional Use Permit is solely for this site and is non-transferable.

Bountiful Land Use Ordinance

14-17-105 HOME OCCUPATION REQUIREMENTS

A proposed home occupation use shall meet the following criteria to qualify for a Home Occupation Business License:

A. The use shall be clearly incidental and secondary to the use of the dwelling and shall not change the appearance, character, or condition thereof. There shall be no displays, advertisements, stock in trade, or signs related to the business except for: one (1) flat wall sign placed on the dwelling that shall not exceed four (4) square feet in size, and any sign required by State Law and/or which meet the provisions of this Title.

B. The use shall be conducted entirely within a dwelling, except for work performed offsite. Only members of the family related by blood, marriage, or adoption, and who reside in the dwelling, may work onsite. The only exception is that one (1) additional person may be employed as a secretary, apprentice, or assistant where there are no more than five (5) family members actively engaged in the home occupation. Employees who are not family members and/or who do not reside at the dwelling shall not meet, park, or otherwise congregate at the home or in the general vicinity. Additional outside employees are not allowed if there is more than one home occupation at the property.

C. The use shall not involve more than 50% of the entire dwelling.

D. The use shall not involve the area of required, covered, off-street parking.

E. No product or commodity shall be stored onsite, and no customer may physically visit the site of a home occupation to take delivery of a product or commodity. Commodities may be produced on the premises and sold offsite.

F. The use shall not create noise, dust, odors, noxious fumes, glare, or other nuisances, including interruption of radio and/or television reception, which are discernible beyond the premises.

G. The use shall not involve using or storing flammable material, explosives, or other dangerous materials, including gun powder.

H. The use shall not involve mechanical or electrical apparatus, equipment, or tools not commonly associated with a residential use or as are customary to home crafts.

I. The use shall not generate traffic in greater volumes than would normally be expected in a residential neighborhood nor involve the use of commercial vehicles other than standard delivery vehicles for delivery of materials to or from the premises.

J. The use shall not involve the parking of equipment or motor vehicles having a gross weight of twelve thousand (12,000) pounds or more directly at the residence.

K. The use shall be in compliance with all applicable fire, building, plumbing, electrical and life safety and health codes of the State of Utah, Davis County, and the City of Bountiful.

L. The residence and property may be inspected from time to time to determine continued compliance with the provisions of this Ordinance and other applicable codes.

14-17-108 HOME OCCUPATION CONDITIONAL USES

Home occupations in the following areas of work are conditional uses, and licenses may be issued for them only if a conditional use permit is granted following notice and a public hearing:

A. Lawn care and/or landscaping,

B. Construction and/or contracting,

C. Snow removal,

D. Residential day care or group instruction facilities with more than eight (8) people,

E. A home occupation office use may be allowed in a detached accessory structure in accordance with the following:

1. The total office area, including a restroom and any storage space, shall not exceed three hundred (300) square feet.
2. The office shall not be located in an area of required, covered, off-street parking.
3. No part of the office space shall be utilized if the required, covered, off-street parking is being utilized for a purpose other than parking.
4. The only retail activity allowed is that transacted electronically or by mail. Any retail activity involving the physical delivery of goods or persons to the property is expressly prohibited.
5. A home occupation office in a detached accessory structure shall be deemed unlawful and shall not be occupied unless the owner has recorded a deed restriction on the property stating that the use of the property is for a single family dwelling, and that the office space shall only be used in accordance with the provisions of the Bountiful City Land Use Ordinance as it may be amended from time to time.

1640 S 200 W

Ang 1

For Office Use Only
Date Rec'd _____
Application $_____
Zone _____

BOUNTIFUL
EST. 1892

CONDITIONAL USE PERMIT APPLICATION

Date of Submittal: 7-18-2016

Property Address: 1640 s 200 w Bountiful UT 84010

Applicant Name: Jonathan H. Graf

Applicant Address: 1640 s 200 w

Applicant Phone #: 801-891-5813

Applicant E-Mail: jonnyg911@gmail.com

Authorization (Owner Signature): Jonathan H Graf

(If applicant is not owner, applicant must submit notarized authorization from all property owners)

Project Name and Description: Handyman Business - provide home repairs and home improvements to home owners. All repair work is completed at customers home, business address is only used to store the tools required for the work.

Committee

- [x] Administrative Committee $50.00 (application fee)
- [ ] Planning Commission $250.00 (application fee)

- The Site Plan Review Committee will review complete applications prior to review by the Planning Commission.

Bountiful City
Miscellaneous - 6060 - 2017
00475A-0002 Darlene ... 07/18/2016 10:17AM
Land Use Application
Payment Amount: 50.00
Transaction Amount: 75.00
CASH:

The application must be signed and notarized by each property owner or authorized agent(s).

Property Owners Affidavit

I (we) Jonathan Henry Graf, being first duly sworn, depose and say that I (we) am (are) the current owner(s) of the property involved in this application: that I (we) have read the application and attached plans and other exhibits and are familiar with its contents; and that said contents are in all respects true and correct based upon my (our) personal knowledge.

Owner's Signature

Owner's Signature (co-owner if any)

State of Utah)
§
County of Davis)

Subscribed and sworn to before me this 18th day of July, 2016.

Notary Public:

Notary Public
TONYA MUNDEN
Commission #672599
My Commission Expires
December 11, 2017
State of Utah

Agent Authorization

I (we), _____, the owner(s) of the real property located at _____, in Bountiful City, Utah, do hereby appoint _____, as my (our) agent to represent me (us) with regard to this application affecting the above described real property, and authorize the aforementioned agent to appear on my (our) behalf before any City board or commission considering this application.

Owner's Signature

Owner's Signature (co-owner if any)

State of Utah)
§
County of Davis)

On the _____ day of _____, 20____, personally appeared before me _____ the signer(s) of the above *Agent Authorization* who duly acknowledge to me that they executed the same.

Notary Public: _____

Google earth

feet 100

meters 30

Equipment Loc - at X

Chemicals - paint at X

Employees - O

Work vehicle is 1/2 ton pickup located at - O

equipment is basic hand & power tools

MAYOR
RANDY LEWIS

CITY COUNCIL
RICHARD HIGGINSON
BETH HOLBROOK
JOHN M. (MARC) KNIGHT
KENDALYN HARRIS
JOHN PITT

CITY MANAGER
GARY R. HILL

Memo

Date: July 20, 2016
To: Administrative Committee
From: Andy Hulka, Assistant Planner
Re: Staff Report for the Administrative Committee Meeting on Monday, August 1, 2016

Overview

5. **PUBLIC HEARING -** Consider approval of a Conditional Use Permit to allow for Solar Panels at 920 East 1500 South, Scott and Maren Randall, applicants.

Item #5

Background

The property where the solar panels are to be installed is located in the R-3 Single Family Zone. Solar power panels are classified in the city ordinance as "private power plants" and require a conditional use permit if they are over 10 watts. The applicant has indicated that the photovoltaic system to be installed will produce 6.03 kilowatts (6,030 watts), requiring a conditional use permit.

Findings

The application submitted indicates the proposed installation of 2 photovoltaic arrays with a total of 18 panels. The arrays will occupy approximately 335 square feet, which is smaller than the 50% maximum roof coverage. The arrays will both be located on the south facing portions of the roof on the back of the house. One array will include 10 panels in 2 rows. The other array will include 6 panels in 2 rows. The roof is of truss construction and has a slope of 4:12. The applicant has indicated that the asphalt shingles were installed this year. The panels will be connected to the roof with a Snap n Rack mount system. A review of information provided in the application indicates that all engineering requirements for the construction of solar panels in Bountiful City will be met. A reflection analysis of the roof pitch indicates that photovoltaic panels should not produce a reflection nuisance to surrounding properties.

Staff Recommendation

Based on the findings, staff has determined that the applicant would comply with all requirements for the conditional use permit. Staff recommends approval of the conditional use permit with the following conditions:

1. The applicant shall obtain a building permit.
2. The panels must be installed only as proposed in the application.
3. This conditional use permit is solely for this site and is non-transferable.

Bountiful Land Use Ordinance

14-14-126 PRIVATE POWER PLANTS

A. A "Private Power Plant" is any device or combination of devices not owned and operated by a regulated utility company, which convert mechanical or chemical energy into electricity. A private power plant with a peak power generation capacity of 10 Watts/12v/500mAmp (or equivalent) is exempt from the provisions of this Section. A private power plant, including a windmill or wind turbine, shall not be permitted within Bountiful City limits, with the following exceptions:

1. A back-up power generator running on unleaded gasoline, diesel, natural gas, propane, or hydrogen fuel cell, rated for a single structure or building lot, located in accordance with the requirements of the zone in which it is located.
2. A photovoltaic cell array or other passive solar energy system located in accordance with the requirements for occupied structures for the zone in which it is located.

B. With the exception of a back-up power generator, no private power plant may be installed or used on any property unless a conditional use permit has been issued for the specific power generation device.

C. A private power plant is not exempt from the height requirements of the Zone in which it is located, and shall be considered an occupied structure for the purposes of calculating height.

D. Solar energy design standards and requirements

1. Solar energy panels or collectors that are mounted to the roof shall:
   a. Not extend beyond the roofline.
   b. Not reflect sunlight onto neighboring windows or rights-of-way.
   c. Not exceed fifty (50) percent of the total roof area.
   d. Shall be maintained in good condition.
2. Prior to installation, use, and connection to the grid, the following shall be done:
   a. A Conditional Use Permit shall be issued
   b. A Building Permit shall be issued
   c. The Power Department shall approve the application for net metering
   d. The Power Department shall approve the physical installation

920 East 1500 South

BOUNTIFUL
EST. 1847

For Office Use Only
Date Rec'd 7-20-16
Admin Date
Application $ 50.00

SOLAR PANEL - CONDITIONAL USE PERMIT APPLICATION

PROPERTY OWNER INFORMATION:

Property Owner Name(s): Scott & Maren Radmall

Property Address: 920 E 1500 S, Bountiful, UT

Property Owner Phone Number: 801-927-8458 *

Property Owner E-Mail: sradmall@gmail.com

*(Property Owner(s) - please sign **Authorization and Affidavit** on page 2)*

SOLAR CONTRACTOR INFORMATION:

Solar Company Name: N/A - Installed by homeowner

Company Address:

Company Phone Number:

Contact Person for Solar Project:

E-Mail Address:

1. **Please include the following with your application:**

☐ **$50.00 Fee**: Conditional Use Permit Application (Administrative Committee)

☐ **SITE PLAN**: Two (2) 11"x17" sized sets of the proposed site plan drawn at 1:10 scale or as required by the City Engineer and City Planner. A site plan shall include:

- Plan view (bird's-eye) of site with placement of solar panels.
- A north arrow, the scale of the drawing, and the date of the drawing.
- Street names and addresses.
  FOR GROUND-MOUNTED SOLAR ARRAYS, THE FOLLOWING:
- Property lines with dimensions.
- All sidewalks, driveways, curbs and gutter, and parking areas.
- All existing easements, rights-of-way, and any other restrictions on the use of the property.
- Existing buildings, proposed buildings, and other significant features on the site.
- Existing buildings and significant features located on adjacent properties within 50 feet (50') of the subject property boundaries.
- When required by the City Planner or City Engineer, and for all new construction, a survey including both existing and proposed contours of the land at intervals of two feet (2') or better.

☐ **ONE-LINE DIAGRAM** (or electrical diagram or block diagram): Two (2) 11" x 17" sets (diagram must follow Bountiful City Light & Power sample diagram included in the solar packet – attachment 2, page 3).

☐ **ENGINEER ANALYSIS LETTER** (including an analysis of the existing roof structure with added solar equipment and uplift resistance)

☐ **COMPLETED SOLAR PACKET FORMS:**
☑ Solar Panel Questions
☑ Photovoltaic System Net Metering Requirements (signed by property owner)
☑ Bountiful City Light & Power - diagram form
☐ Building Permit Application

☐ **SPEC SHEETS:** Solar product information

☐ **PHOTO:** Electrical service (meter main with disconnect)

2. **Property Owner Authorization and Affidavit**

The undersigned, being duly sworn, depose that I am (we are) the owner(s) of the property involved in this application and that the statements contained herein and by attachment, are to the best of my (our) knowledge true and correct.

Scott C. Tadwell
Property Owner

Property Owner

BOUNTIFUL
EST. 1847

MAYOR
Randy C. Lewis
CITY COUNCIL
Kendalyn Harris
Richard Higginson
Beth Holbrook
John M. Knight
John Pitt
CITY MANAGER
Gary Hill

SOLAR PANEL QUESTIONS

Please completely answer all questions (do not simply refer to an attachment)

Size of Array	Array 1 / Array 2
Array Dimensions	2 X 5 / 2 X 3
Total Number of Panels	155" X 195" / 155" X 117"
Total rating of photovoltaic system:	6.03 KW 18 panels X 335w
Mounting Location	
Roof/Wall/Other	Roof mount
Roof Pitch (Rise/Run e.g. "5/12")	4/12
Roofing Material Asphalt Shingle/Tile/Steel/Other Age & Condition of Shingles	Asphalt shingle. New in 2016
Roof Construction Rafter/Truss/Joist	Truss
Engineering Analysis	
Connection to Roof	SnapNrack series 100 mount system
Analysis of Existing Roof Structure with added Solar Equipment	"Installation of solar panels on this existing roof will not adversely affect the structure of this house."
Adequate Uplift Resistance (120 mph Exp B)	Yes. Winds up to 155 mph.

VECTOR ENGINEERS

UTAH OFFICES
Sandy
Layton
St. George

Project Number: U2082-001-161

July 7, 2016

Scott Radmall
920 E 1500 S
Bountiful, UT 84010

ATTENTION: Scott Radmall

REFERENCE: Scott Radmall Residence: 920 E 1500 S, Bountiful, UT 84010
Solar Panel Installation

Dear Mr. Radmall:

Per your request, we have reviewed the site survey information and photos relating to the installation of solar panels at the above-referenced site.

Based upon our review, it is our conclusion that the installation of solar panels on this existing roof will not adversely affect the structure of this house. The design of solar panel supporting members is by the manufacturer and/or installer. The adopted building code in this jurisdiction is the International Building Code, 2012 Edition and ASCE 7-10. Appropriate design parameters which must be used in the design of the supporting members and the connections to the roof are listed below:

Ground snow load: 47 psf (verify w/ local building department)
Design wind speed for Risk Category II structures: 155 mph (3-sec gust)
Wind exposure: Category C

Our conclusion regarding the adequacy of the existing roof is based on the fact that the additional weight related to the solar panels is less than 3 pounds per square foot. In the area of the solar panels, no 20 psf live loads will be present. Regarding snow loads, it is our conclusion that since the panels are slippery, effective snow loads will be reduced in the areas of the panels. Solar panels will be flush-mounted, parallel to and no more than 6" above the roof surface. Thus, it is our conclusion that any additional wind loadings related to the addition of these solar panels is negligible. The mounts shall be attached at 48" O.C. maximum with 5/16" diameter lag screws with a minimum 2-1/2" thread penetration into the rafter or truss top chord.

During design and installation, particular attention must be paid to the maximum allowable spacing of attachments and the location of solar panels relative to roof edges. The use of solar panel support span tables provided by the manufacturer is allowed only where the building type, site conditions, and solar panel configuration match the description of the span tables. Attachments to existing rafters must be staggered so as not to over load any existing structural member. Waterproofing around the roof penetration is the responsibility of others. All work performed must be in accordance with accepted industry-wide methods and applicable safety standards. Vector Structural Engineering assumes no responsibility for improper installation of the solar panels.

Our conclusions are based upon our review of the photos which indicate that all structural roof components and other supporting elements are in good condition and are free of damage and deterioration. Roof framing type, size, and spacing are as indicated in the photos and site survey information. A representative of Vector Structural Engineering has not physically observed the roof framing.

Very truly yours,

VECTOR STRUCTURAL ENGINEERING, LLC

PROFESSIONAL STRUCTURAL ENGINEER
No. 5150370
BRETT D. VEAZIE
STATE OF UTAH

07/07/2016

Brett D. Veazie, P.E.
Project Engineer

BDV/dgd

7/19/2016
1500 South
N
920 East 1500 South

Radmall Residence
Single Line Diagram

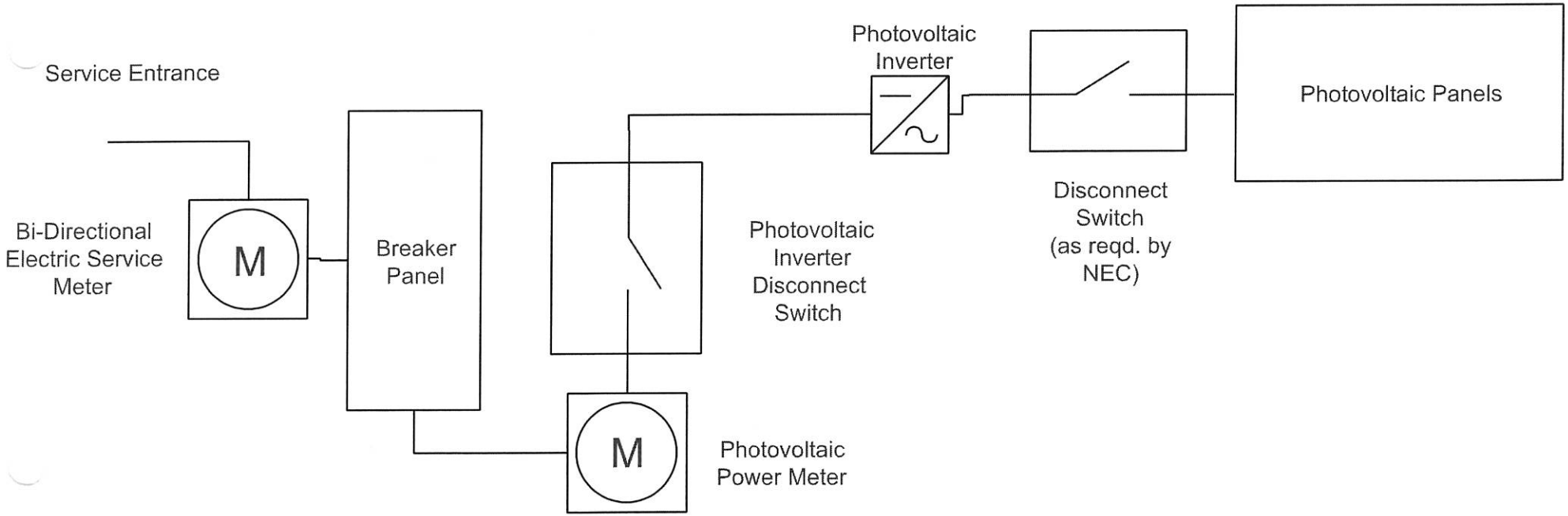

MAYOR
RANDY LEWIS

CITY COUNCIL
RICHARD HIGGINSON
BETH HOLBROOK
JOHN M. (MARC) KNIGHT
KENDALYN HARRIS
JOHN PITT

CITY MANAGER
GARY R. HILL

Bountiful City, Utah
Conditional Use Permit

A public hearing was held on July 26, 2016, at Bountiful City Hall to consider the request of Kelly Barnett for a Conditional Use Permit allowing for a Private Power Plant (Solar Panels) at the following location:

447 East 1700 South, Bountiful City, Davis County, Utah

ALL OF LOT 19, PARADISE HILLS PLAT A. CONT. 0.235 ACRES.

Parcel: 04-099-0019

The Bountiful City Administrative Committee heard the matter and considered the statements of the applicant, the City staff, and the public. As a result, the Administrative Committee makes the following findings:

1. This matter is properly heard before the Administrative Committee.
2. Appropriate public notice has been provided and a public hearing held.
3. The proposed request to operate a Private Power Plant (Solar Panels) meets the letter and the intent of the specific requirements in §14-2 and 14-14 et seq (Conditional Use Permit provisions) of the Bountiful City Land Use Ordinance.

The Bountiful City Administrative Committee hereby grants this Conditional Use Permit for a Private Power Plant (Solar Panels) to be located at 447 East 1700 South, in Bountiful, Davis County, Utah, with the following conditions:

1. The applicant shall obtain a building permit.
2. The panels must be installed only as proposed in the application.
3. This conditional use permit is solely for this site and is non-transferable.

The Conditional Use Permit was approved on July 26, 2016, and this written form was approved this 1st day of August, 2016.

Chad Wilkinson
Planning Director

ATTEST: Julie Holmgren
Recording Secretary